FED. ROAD DIST. NO.	STATE	FED. AID PROJ. NO.	FISCAL YEAR	SHEET NO.	TOTAL SHEETS
HAWAII	HAW.	I-H3-1(57)	1988		

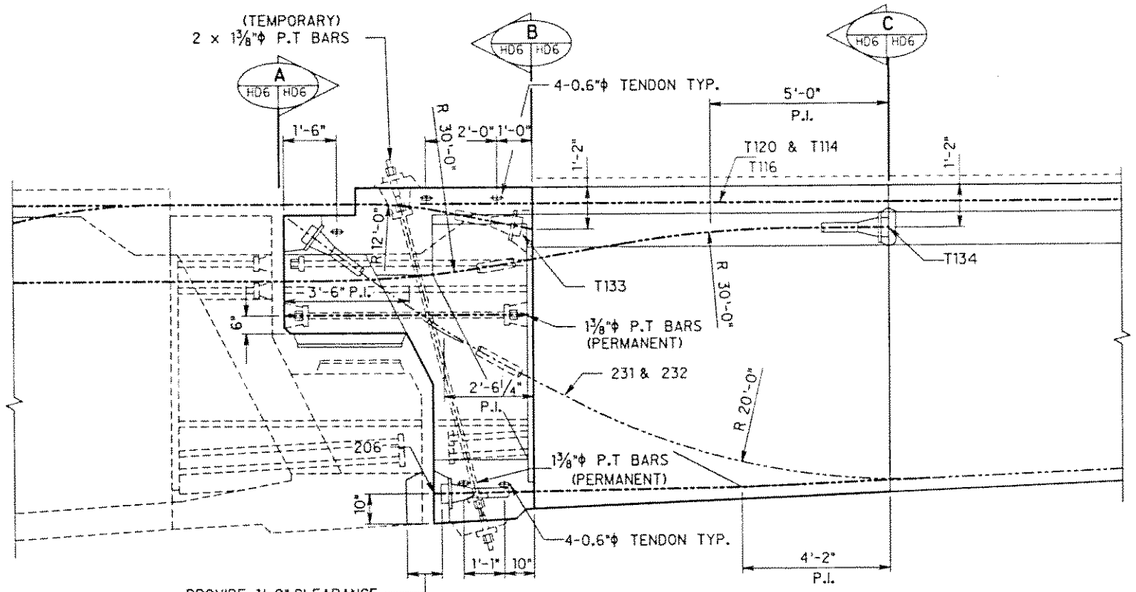

SECTION D HD6 HD6
SCALE : ½" = 1'-0"

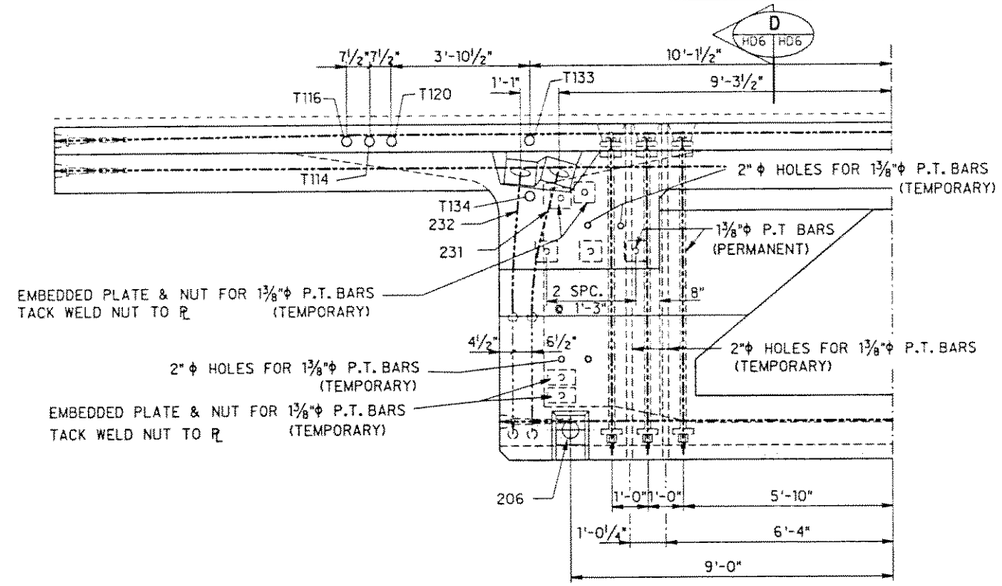

SECTION A HD6 HD6
SCALE : ½" = 1'-0"

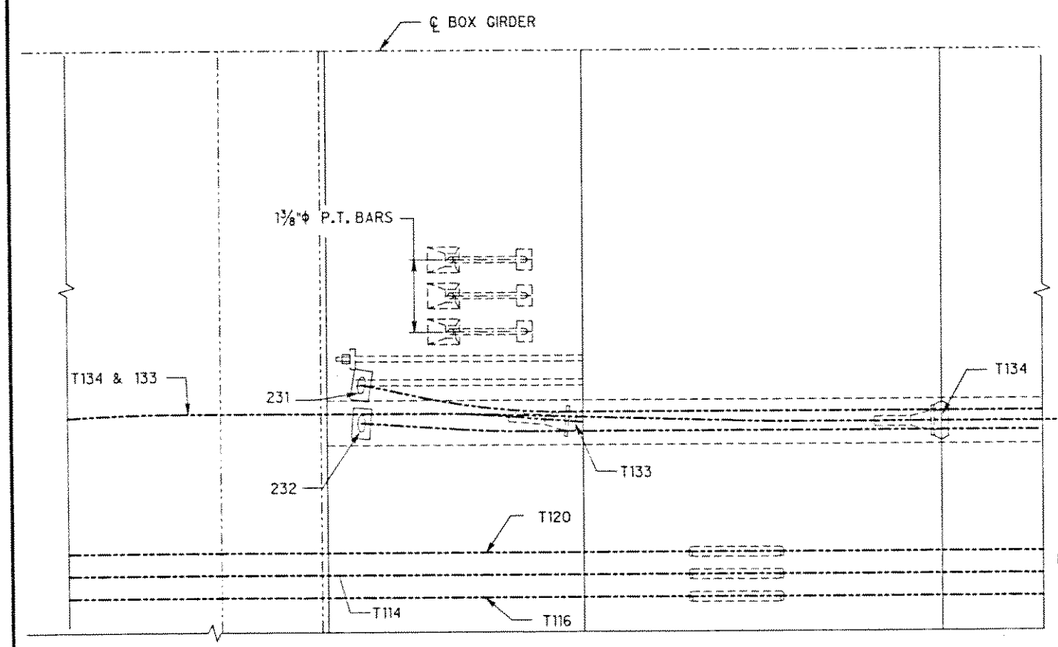

PLAN VIEW
SCALE : ½" = 1'-0"

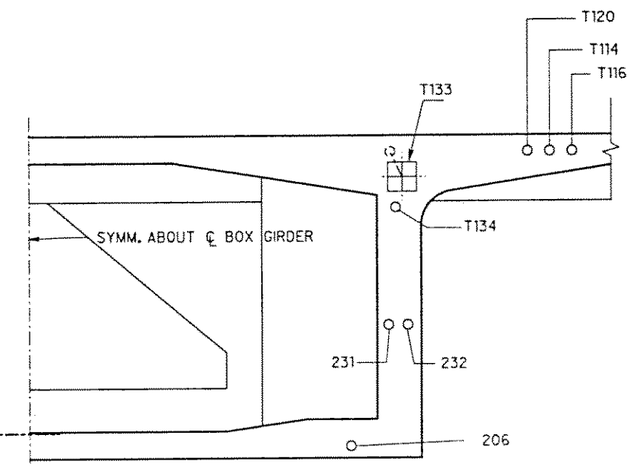

SECTION B HD6 HD6
SCALE : ½" = 1'-0"

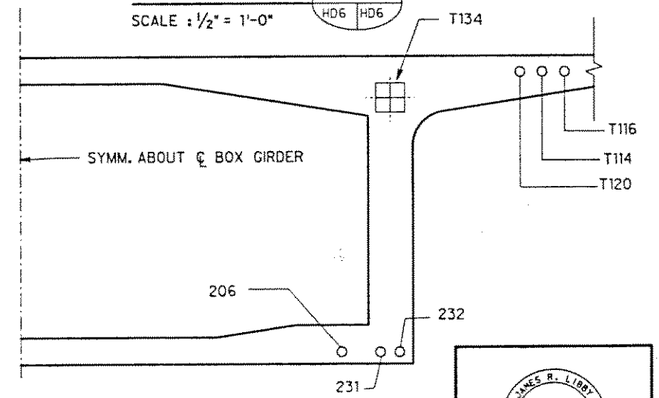

SECTION C HD6 HD6
SCALE : ½" = 1'-0"

NOTES:
1. MINIMUM DUCT RADIUS IS 20'-0" UNLESS SHOWN OTHERWISE.
2. ALL RADII SHOWN ARE IN PLANE OF THE TENDON AXIS.
3. CANTILEVER TENDONS FOR TYPICAL SEGMENTS NOT SHOWN.
4. TRANSVERSE TENDONS:
   STRESS TENDONS TO 216ksi.
   ASSUMED ANCHOR SET= ⅜"
5. ALL P.T. BAPS ARE 1⅜"
   STRESS ALL PERMANENT AND VERTICAL TEMPORARY BARS TO 105ksi.
   STRESS ALL HORIZONTAL TEMPORARY BARS TO 75ksi.

DATE	REVISION
05/13/91	REVISED NOTE 5.
10/04/90	UPDATED DRAWING.

J. MULLER INTERNATIONAL | Libby Engineers

JAMES R. LIBBY REGISTERED PROFESSIONAL ENGINEER NO. 7375-S HAWAII, U.S.A.

THIS WORK WAS PREPARED BY ME OR UNDER MY SUPERVISION

STATE OF HAWAII
DEPARTMENT OF TRANSPORTATION
HIGHWAYS DIVISION

HINGE SEGMENT B
POST-TENSIONING DETAILS

INTERSTATE ROUTE H-3
F.A.I. PROJECT No. I-H3-1(57)
F.A.I. PROJECT No. I-H3-1(58)
SCALE : AS NOTED DATE : SEP. 1990

SHEET No. HD6 OF SHEETS

ORIGINAL PLAN | SURVEY PLOTTED BY | DRAWN BY | TRACED BY | DESIGNED BY | QUANTITIES BY | CHECKED BY | DATE
NOTE BOOK No.