FED. ROAD DIST. NO.	STATE	FED. AID PROJ. NO.	FISCAL YEAR	SHEET NO.	TOTAL SHEETS
HAWAII	HAW.	I-H3-1(57)	1988		

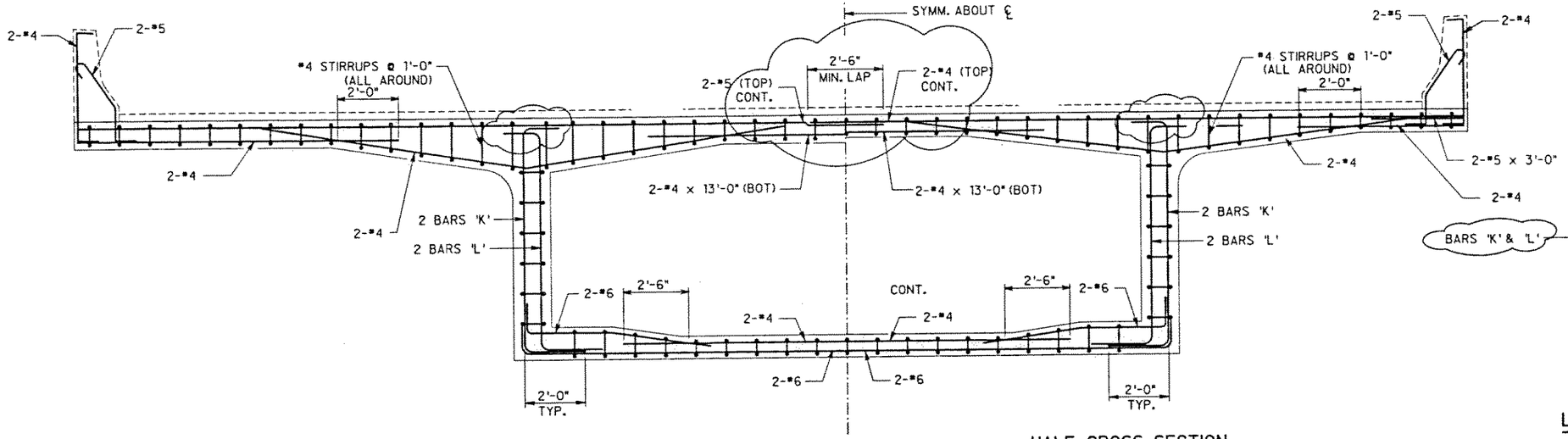

HALF CROSS-SECTION

FOR WIDTHS GREATER THAN 49'-1"
SCALE : 1/2"=1'-0"

MIDSPAN CLOSURE JOINT

HALF CROSS-SECTION

FOR WIDTHS OF 49'-1" OR LESS
SCALE : 1/2"=1'-0"

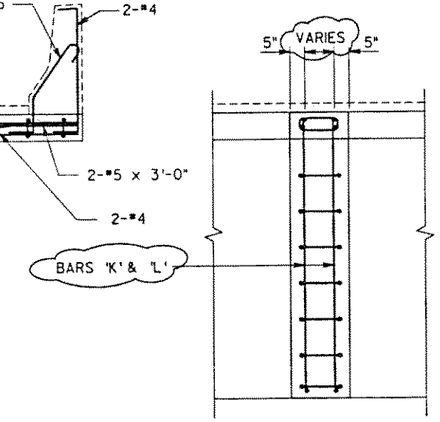

LONGITUDINAL ELEVATION

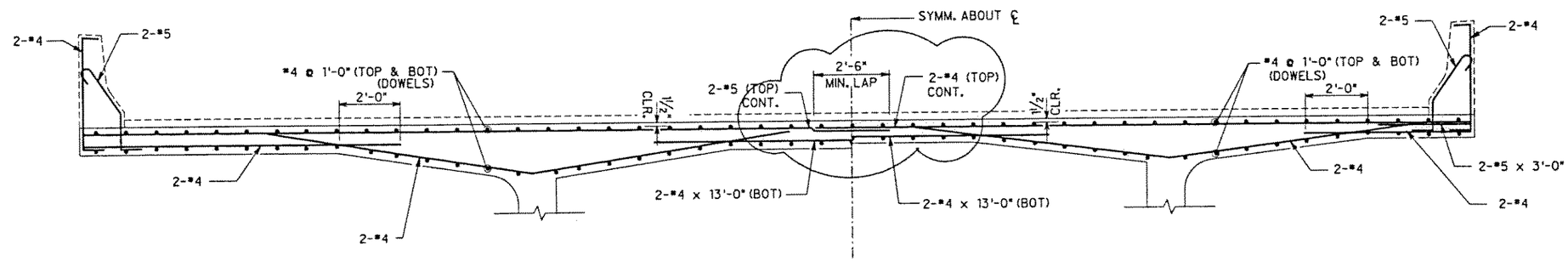

HALF CROSS-SECTION

FOR WIDTHS GREATER THAN 49'-1"
SCALE : 1/2"=1'-0"

CLOSURE JOINT AT PIER

HALF CROSS-SECTION

FOR WIDTHS OF 49'-1" OR LESS
SCALE : 1/2"=1'-0"

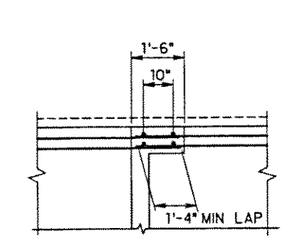

LONGITUDINAL ELEVATION

JAMES R. LIBBY
REGISTERED PROFESSIONAL ENGINEER
No. 2376-S
HAWAII, U.S.A.

THIS WORK WAS PREPARED BY ME OR UNDER MY SUPERVISION

DATE	REVISION
09/14/90	UPDATED DRAWING

J. MULLER INTERNATIONAL | Libby Engineers

STATE OF HAWAII
DEPARTMENT OF TRANSPORTATION
HIGHWAYS DIVISION

CLOSURE JOINT REINFORCING

INTERSTATE ROUTE H-3
F.A.I. PROJECT No. I-H3-1(57)
F.A.I. PROJECT No. I-H3-1(58)
SCALE : AS NOTED DATE : JUN. 1990
SHEET No. PB5 OF SHEETS

ORIGINAL PLAN | NOTE BOOK No. | SURVEY PLOTTED BY | DRAWN BY | TRACED BY | DESIGNED BY | QUANTITIES BY | CHECKED BY | DATE