FED. ROAD DIST. NO.	STATE	FED. AID PROJ. NO.	FISCAL YEAR	SHEET NO.	TOTAL SHEETS
HAWAII	HAW.	I-H3-1(75) UNIT III	1994	124	353

PAVEMENT DETAIL
SCALE: ½" = 1'-0"

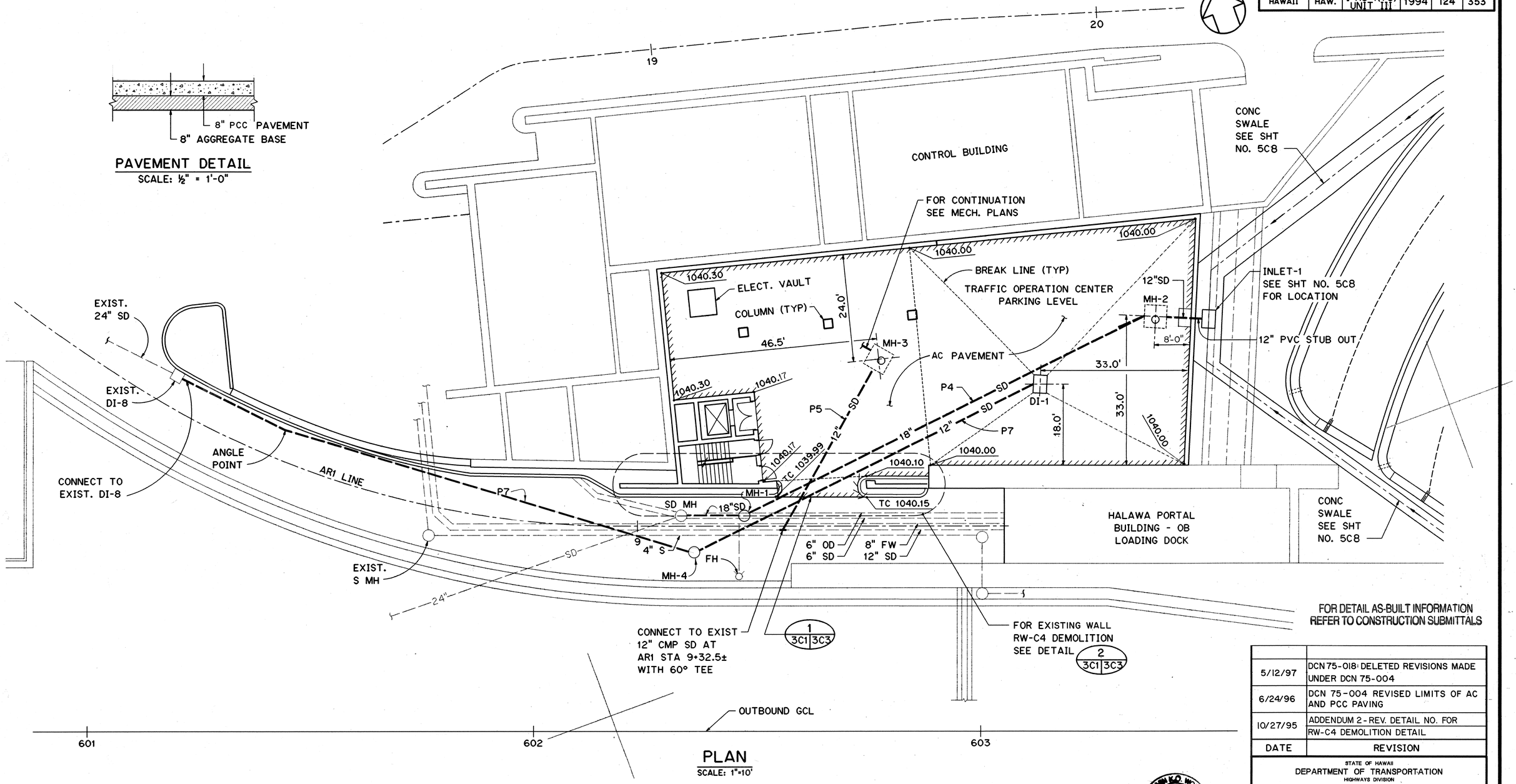

FOR DETAIL AS-BUILT INFORMATION REFER TO CONSTRUCTION SUBMITTALS

PLAN
SCALE: 1"=10'

NOTE:

FOR CIVIL ABBREVIATIONS, SYMBOLS AND GENERAL NOTES, SEE SHEET NO. 1G11.

GRAPHIC SCALES
2' 1' 0' 2' 4' — ½" = 1'-0"
10' 0' 10' 20' — 1" = 10'

HERMAN K.O. WONG LICENSED PROFESSIONAL ENGINEER No. 8048-C HAWAII, U.S.A.

THIS WORK WAS PREPARED BY ME OR UNDER MY SUPERVISION

DATE	REVISION
5/12/97	DCN 75-018: DELETED REVISIONS MADE UNDER DCN 75-004
6/24/96	DCN 75-004 REVISED LIMITS OF AC AND PCC PAVING
10/27/95	ADDENDUM 2 - REV. DETAIL NO. FOR RW-C4 DEMOLITION DETAIL

STATE OF HAWAII
DEPARTMENT OF TRANSPORTATION
HIGHWAYS DIVISION

GRADING AND DRAINAGE

TRAFFIC OPERATIONS CENTER EXPANSION
H-3 FINISH (UNIT III)
FAIP NO. I-H3-1(75), UNIT III
T.K. TUNNEL / ACCESS ROADS

SCALE: AS NOTED DATE: JUN 1995

SHEET NO. 3C1 OF 4 SHEETS

ORIGINAL PLAN		DATE
SURVEY PLOTTED BY		
DRAWN BY	B. VUONG	JAN 95
TRACED BY		
DESIGNED BY	G. TE BOEKHORST	JAN 95
QUANTITIES BY		
CHECKED BY	D. MANITI	JAN 95
NOTE BOOK		
NO.		

PAGTACONAN 2410:(DWG.CIVIL)CS3003.FGB;1 05APR95-13.26.00

ADD. 124

FED. ROAD DIST. NO.	STATE	FED. AID PROJ. NO.	FISCAL YEAR	SHEET NO.	TOTAL SHEETS
HAWAII	HAW.	I-H3-1(75) UNIT III	1994	125	353

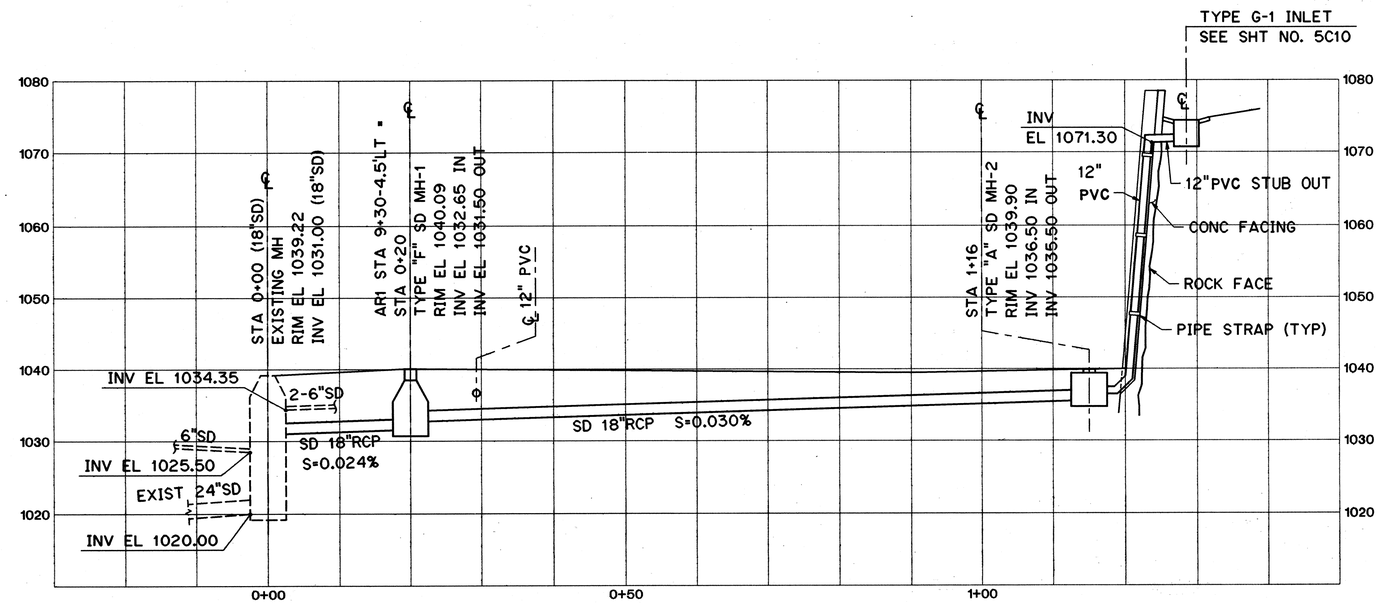

STORM DRAIN PROFILE - P4

SCALE: HORIZ. 1'=10'
VERT. 1"=10'

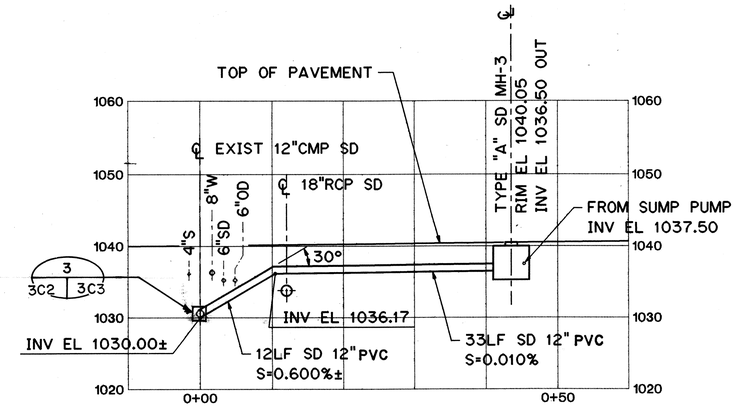

STORM DRAIN PROFILE - P5

SCALE: HORIZ. 1'=10'
VERT. 1"=10'

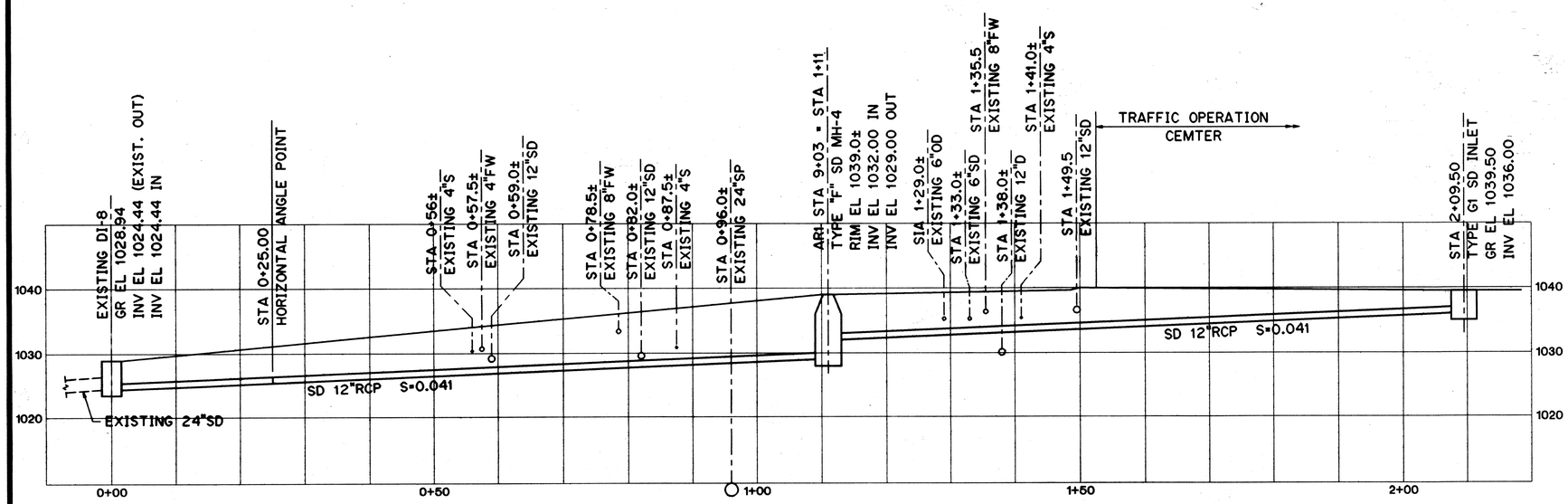

STORM DRAIN PROFILE - P7

SCALE: HORIZ. 1'=10'
VERT. 1"=10'

GRAPHIC SCALES
10' 0' 10' 20'
1" = 10'

THIS WORK WAS PREPARED BY ME OR UNDER MY SUPERVISION

KEVIN K.O. CHUNG
LICENSED PROFESSIONAL ENGINEER
No. 8049-C
HAWAII, U.S.A.

DATE	REVISION

STATE OF HAWAII
DEPARTMENT OF TRANSPORTATION
HIGHWAYS DIVISION

DRAINAGE PROFILES

TRAFFIC OPERATIONS CENTER EXPANSION
H-3 FINISH (UNIT III)
FAIP NO. I-H3-1(75), UNIT III
T.K. TUNNEL / ACCESS ROADS

SCALE: 1"=10'-0" DATE: JUN 1995

SHEET NO. 3C2 OF 4 SHEETS

ORIGINAL PLAN		SURVEY PLOTTED BY	B. VUONG	DATE
		DRAWN BY	"	JAN 95
		TRACED BY	"	JAN 95
NOTE BOOK		DESIGNED BY	G. TE BOEKHORST	JAN 95
		QUANTITIES BY	"	JAN 95
NO.		CHECKED BY	D. MANITT	JAN 95

VUONG ELWOOD:12410:IDWG.CIVIL3C55013.FGB;1 01FEB95-15.17.40

FED. ROAD DIST. NO.	STATE	FED. AID PROJ. NO.	FISCAL YEAR	SHEET NO.	TOTAL SHEETS
HAWAII	HAW.	I-H3-1(75) UNIT III	1994	126	353

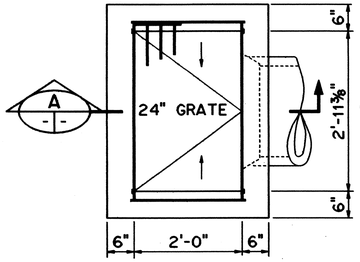

PLAN

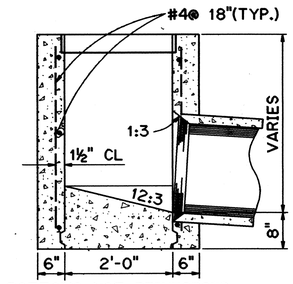

BOTTOMS NOT REINFORCED

SECTION A

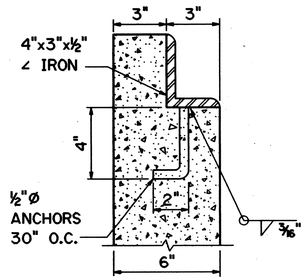

SECTION B

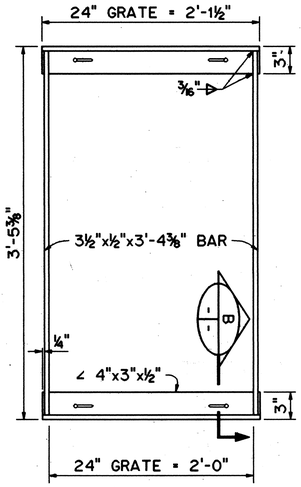

TYPICAL FRAME

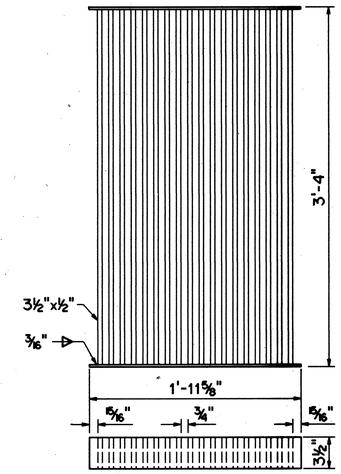

WELDED GRATE

TYPE G1 DRAINAGE INLET

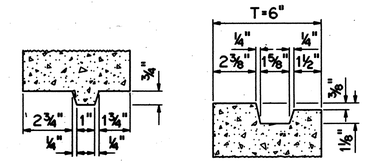

JOINT DETAIL

NOTES:

1. CONSTRUCT RUNGS AS REQUIRED. SEE STANDARD PLAN.
2. BASIN FLOOR SHALL HAVE WOOD TROWEL FINISH AND A MINIMUM SLOPE OF 12:3 FROM ALL DIRECTIONS TOWARD OUTLET PIPE.

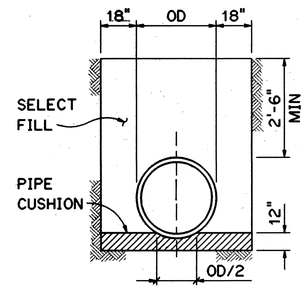

TYPICAL TRENCH SECTION

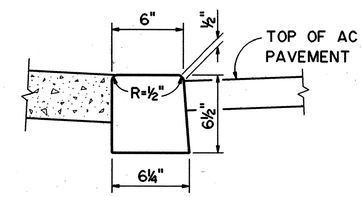

CURB 1 / 3C1 | 3C3

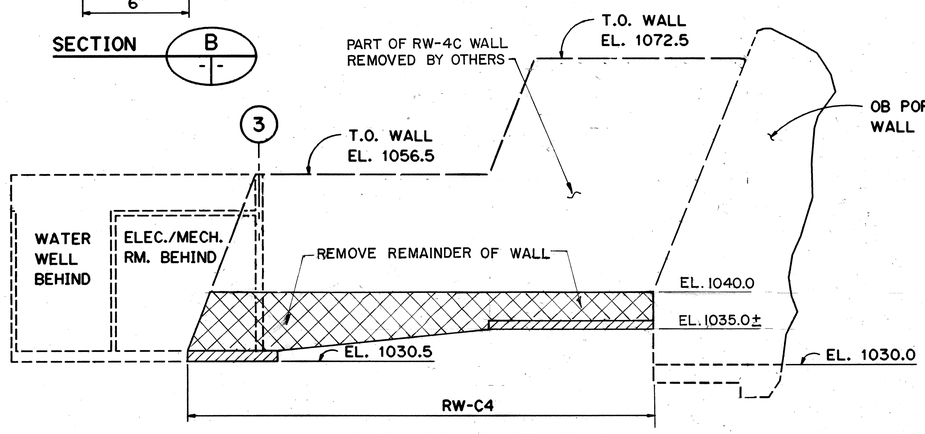

DEVELOPED ELEVATION

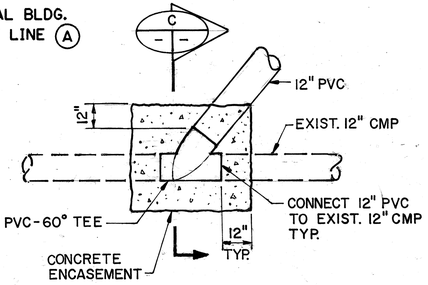

PLAN
NTS

PVC PIPE CONNECTION TO EXISTING CMP 3 / 3C2 | 3C3

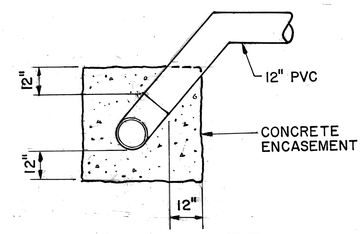

SECTION C
NTS

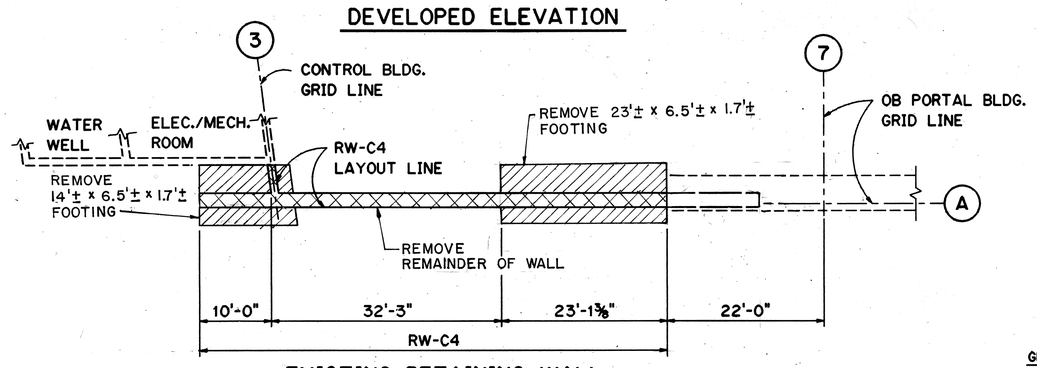

EXISTING RETAINING WALL
RW-C4 DEMOLITION DETAIL 2 / 3C1 | 3C3
SCALE: 1" = 10'-0"

GRAPHIC SCALE
10' 0' 10' 20'
1" = 10'

KEVIN K.O. WONG
LICENSED PROFESSIONAL ENGINEER
No. 8048-C
HAWAII, U.S.A.

THIS WORK WAS PREPARED BY ME OR UNDER MY SUPERVISION

DATE	REVISION

STATE OF HAWAII
DEPARTMENT OF TRANSPORTATION
HIGHWAYS DIVISION

MISCELLANEOUS DETAILS

TRAFFIC OPERATIONS CENTER EXPANSION
H-3 FINISH (UNIT III)
FAIP NO. I-H3-1(75), UNIT III
T.K. TUNNEL / ACCESS ROADS

SCALE: NTS DATE: JUN 1995

SHEET NO. 3C3 OF 4 SHEETS

ORIGINAL PLAN		DATE
SURVEY PLOTTED BY	B. VUONG	JAN 95
DRAWN BY		
TRACED BY	G. TE BOEKHORST	JAN 95
DESIGNED BY		
QUANTITIES BY	D. MANITT	JAN 95
CHECKED BY		
NOTE BOOK NO.		

CARZON ELWOOD:2410:[DWG.CIVIL3CS3093.FGB]1 01FEB95-13.46.50

FED. ROAD DIST. NO.	STATE	FED. AID PROJ. NO.	FISCAL YEAR	SHEET NO.	TOTAL SHEETS
HAWAII	HAW.	I-H3-1(75) UNIT III	1994	127	353

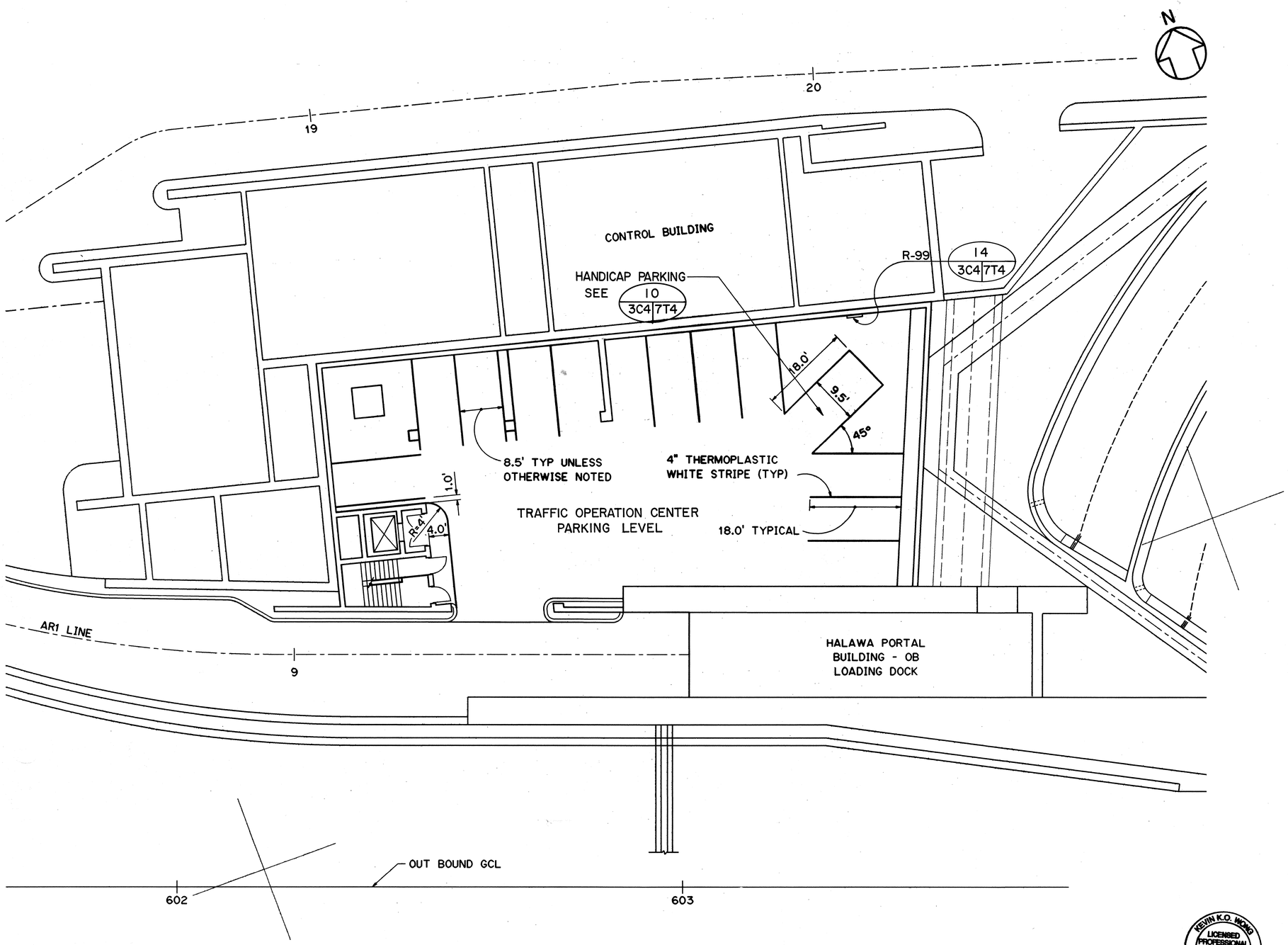

ORIGINAL PLAN	
NOTE BOOK	
NO.	
SURVEY PLOTTED BY	
DRAWN BY	B. VUONG
TRACED BY	
DESIGNED BY	G. TE BOEKHORST
QUANTITIES BY	
CHECKED BY	D. MANITI
DATE	JAN '95
DATE	JAN '95
DATE	JAN '95
DATE	JAN '95

GRAPHIC SCALE

10' 0' 10' 20'

1" = 10'

THIS WORK WAS PREPARED BY ME OR UNDER MY SUPERVISION

KEVIN K.O. WONG
LICENSED PROFESSIONAL ENGINEER
No. 8048-C
HAWAII, U.S.A.

DATE	REVISION

STATE OF HAWAII
DEPARTMENT OF TRANSPORTATION
HIGHWAYS DIVISION

STRIPING AND SIGNING

TRAFFIC OPERATIONS CENTER EXPANSION

H-3 FINISH (UNIT III)
FAIP NO. I-H3-1(75), UNIT III
T.K. TUNNEL / ACCESS ROADS

SCALE: 1"=10'-0" DATE: JUN 1995

SHEET NO. 3C4 OF 4 SHEETS

AGUILAR ELWOOD...:\...\DWG.CIVIL\CS3083.FGB;1 31JAN95-21.40.10

FED. ROAD DIST. NO.	STATE	FED. AID PROJ. NO.	FISCAL YEAR	SHEET NO.	TOTAL SHEETS
HAWAII	HAW.	I-H3-1(75) UNIT III	1994	128	353

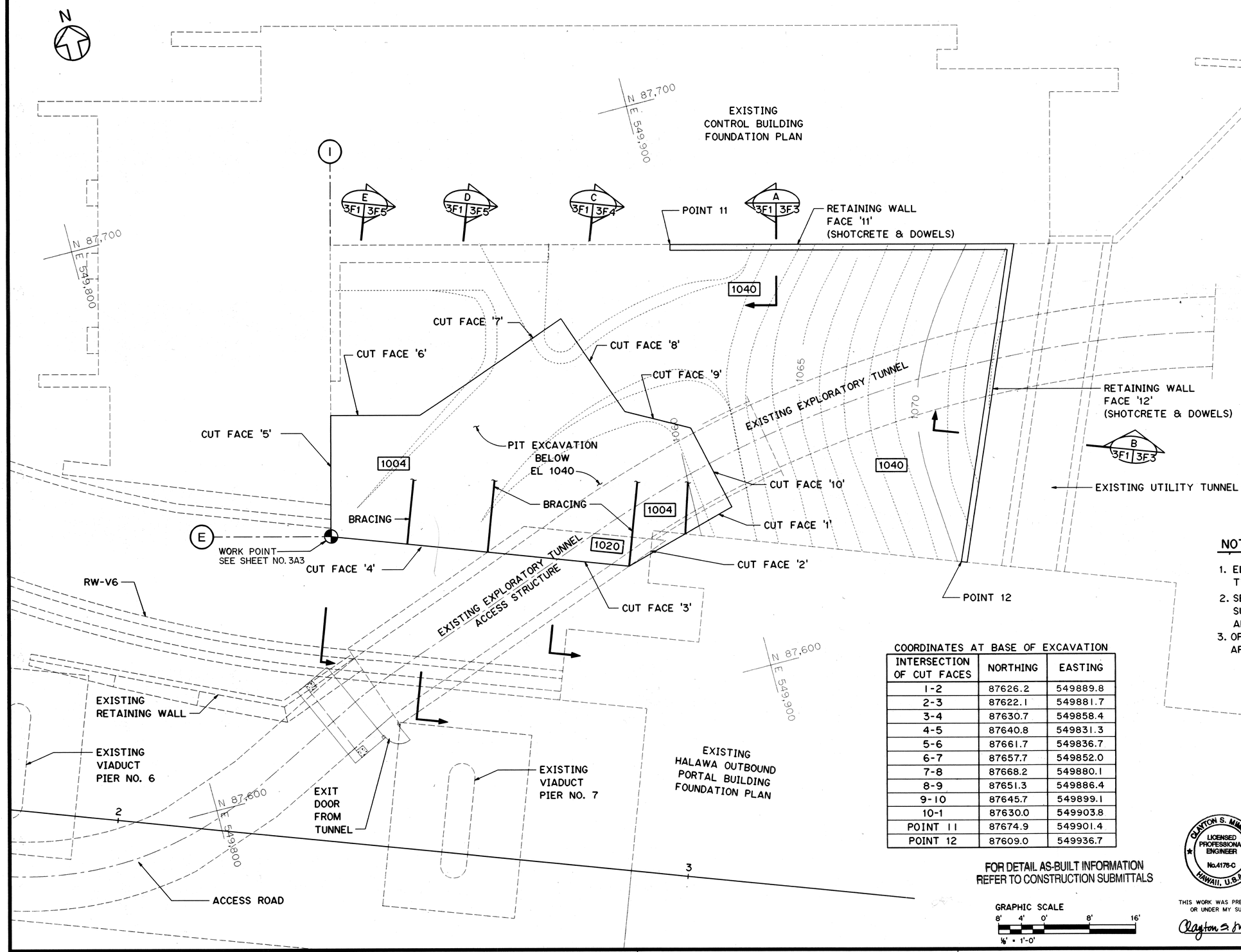

REFERENCE CONTRACT DOCUMENTS:

1. OB PORTAL AND CONTROL BUILDING
   - FAIP NO. I-H3-1(64)
   - GEOLOGY AND CONSTRUCTION HISTORY SUMMARY HALAWA & HAIKU APPROACH AND TUNNELS
2. EXPLORATORY TUNNEL
   - FAIP NO. I-H3-1(37)
   - FAIP NO. I-H3-1(64)
   - TRANS-KOOLAU EXPLORATORY TUNNEL HALAWA APPROACH AND TUNNELS GEOLOGY

REFERENCE PLANS:

1. RETAINING WALL AT EXPLORATORY TUNNEL
   FAIP NO. I-H3-1(64)
   - 293/SA26
2. RETAINING WALL RW-V6
   FAIP NO. I-H3-1(64)
   - 242/SV1
   - 280/SA13
3. VIADUCT PIERS
   FAIP NO. I-H3-1(64)
   - 243/SV2
4. EXISTING UTILITY TUNNEL
   FAIP NO. I-H3-1(64)
   - 158/FT6

NOTES:

1. ELEVATION OF OPEN-CUT EXCAVATION IS SHOWN TYPICALLY AS 1004.
2. SEE SHEET NO. 3F2 FOR EXISTING GROUND SUPPORT IN THE VICINITY OF THE PIT EXCAVATION AND RETAINING WALL.
3. OPEN CUT EXCAVATION GEOMETRY DATA APPLY TO THE BOTTOM OF CUT FACES.

COORDINATES AT BASE OF EXCAVATION

INTERSECTION OF CUT FACES	NORTHING	EASTING
1-2	87626.2	549889.8
2-3	87622.1	549881.7
3-4	87630.7	549858.4
4-5	87640.8	549831.3
5-6	87661.7	549836.7
6-7	87657.7	549852.0
7-8	87668.2	549880.1
8-9	87651.3	549886.4
9-10	87645.7	549899.1
10-1	87630.0	549903.8
POINT 11	87674.9	549901.4
POINT 12	87609.0	549936.7

FOR DETAIL AS-BUILT INFORMATION
REFER TO CONSTRUCTION SUBMITTALS

GRAPHIC SCALE
8' 4' 0' 8' 16'
⅛" = 1'-0"

CLAYTON S. MIMURA
LICENSED PROFESSIONAL ENGINEER
No.4176-C
HAWAII, U.S.A.

THIS WORK WAS PREPARED BY ME OR UNDER MY SUPERVISION

Clayton S. Mimura

DATE	REVISION
4/18/96	DCN 75-001: REV. 'COORDINATES AT BASE OF EXCAVATION' PER RESPONSES TO RFI NO. 4097-05 AND 4097-06, ADDED TOC WORK POINT REFERENCE NOTE.

STATE OF HAWAII
DEPARTMENT OF TRANSPORTATION
HIGHWAYS DIVISION

PLAN - EXCAVATION AND RETAINING WALLS

TRAFFIC OPERATIONS CENTER EXPANSION
H-3 FINISH (UNIT III)
FAIP NO. I-H3-1(75), UNIT III
T.K. TUNNEL/ACCESS ROADS

SCALE: 1/8" = 1'-0" DATE: JUN 1995

SHEET NO. 3F1 OF 8 SHEETS

ORIGINAL PLAN			DATE
	SURVEY PLOTTED BY	A. KORBMACHER	JAN 95
	DRAWN BY		
NOTE BOOK	TRACED BY	D. O'ENUGA	JAN 95
	DESIGNED BY		
	QUANTITIES BY	G. BOYCE	JAN 95
NO.	CHECKED BY		

HERNANDEZ ELWOOD:::2410:[DWG.GEO]GE013.FGB;1 23MAY95-15.04.10

FED. ROAD DIST. NO.	STATE	FED. AID PROJ. NO.	FISCAL YEAR	SHEET NO.	TOTAL SHEETS
HAWAII	HAW.	I-H3-1(75) UNIT III	1994	129	353

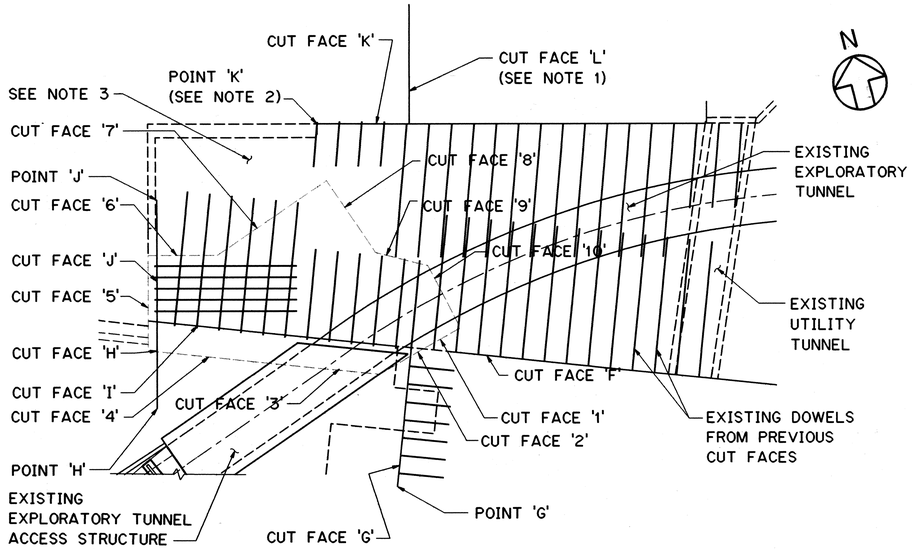

PLAN, EXISTING GROUND SUPPORT

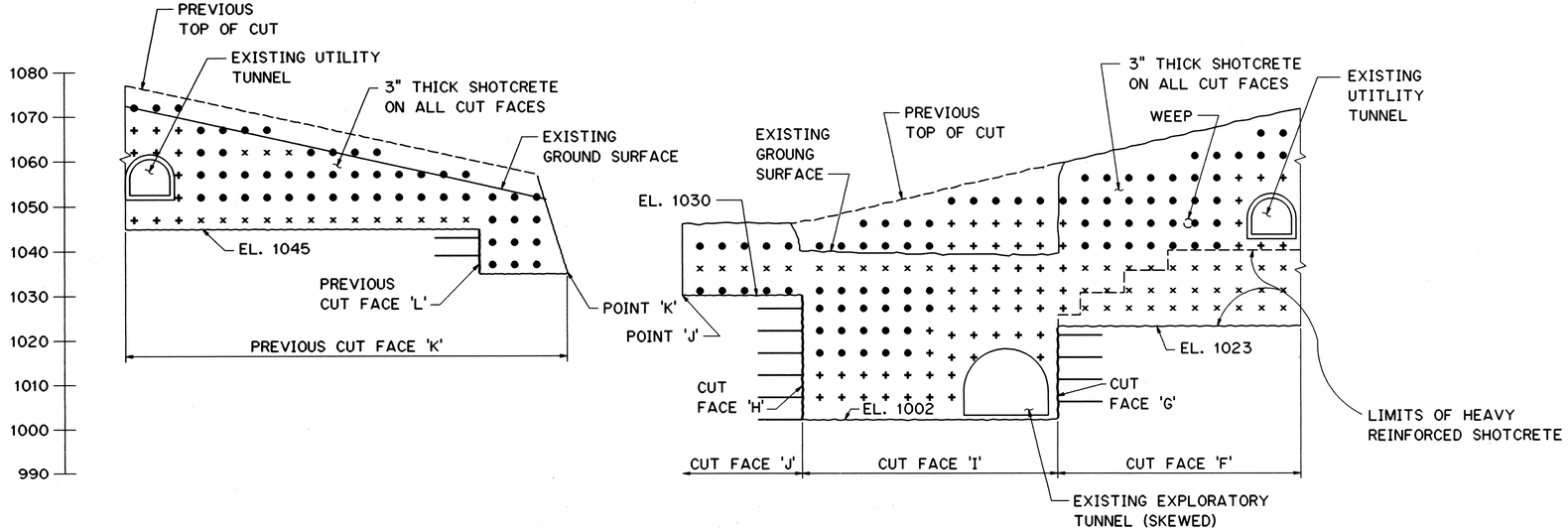

DEVELOPED ELEVATION, EXISTING GROUND SUPPORT

REFERENCE CONTRACT DOCUMENTS:

1. EXISTING EXPLORATORY TUNNEL
   - FAIP NO. I-H3-1(37)
   - FAIP NO. I-H3-1(64)

REFERENCE PLANS:

1. PORTAL DEVELOPMENT
   FAIP NO. I-H3-1(64)
   - 138/FA28
   - 139/FA29
   - 140/FA30
   - 141/FA31
2. EXISTING UTILITY TUNNEL GROUND SUPPORT
   FAIP NO. I-H3-1(64)
   - 158/FT6

NOTES:

1. CUT FACES AND POINTS USED FOR PORTAL DEVELOPMENT ON PREVIOUS CONTRACT 64 ARE INDICATED AS CUT FACES A, B, C, ETC. NEW CUT FACES ARE INDICATED AS FACES 1, 2, 3, ETC.
2. DOWELS ON PREVIOUS CUT FACES 'I', 'J' AND 'K' HAD A MINIMUM 8-INCH STICK-OUT FOR ATTACHMENT TO THE CAST-IN-PLACE CONCRETE FACADE.
3. FILL WAS PLACED IN THIS AREA DURING CONSTRUCTION OF THE EXISTING CONTROL BUILDING

LEGEND:

- ● 10'-0" LONG NO. 10 DOWEL
- + 20'-0" LONG NO. 10 DOWEL
- × 30'-0" LONG NO. 10 DOWEL

GRAPHIC SCALE

16' 8' 0' 16' 32' 48' 64'

SCALE: 1" = 16'

CLAYTON S. MIMURA LICENSED PROFESSIONAL ENGINEER No.4176-C HAWAII, U.S.A.

THIS WORK WAS PREPARED BY ME OR UNDER MY SUPERVISION

Clayton S. Mimura

DATE	REVISION

STATE OF HAWAII
DEPARTMENT OF TRANSPORTATION
HIGHWAYS DIVISION

EXISTING GROUND SUPPORT
PIT EXCAVATION

TRAFFIC OPERATIONS CENTER EXPANSION
H-3 FINISH (UNIT III)
FAIP NO. I-H3-1(75), UNIT III
T.K. TUNNEL/ACCESS ROADS

SCALE: 1" = 16'-0" DATE: JUN 1995

SHEET NO. 3F2 OF 8 SHEETS

ORIGINAL PLAN			DATE
	SURVEY PLOTTED BY	A. KORBMACHER	JAN 95
	DRAWN BY		
NOTE BOOK	TRACED BY	D. OYENUGA	JAN 95
	DESIGNED BY		
NO.	QUANTITIES BY	G. BOYCE	JAN 95
	CHECKED BY		

HERNANDEZ ELWOOD:::2410:DWG.GEOJGE016.FGB71 23MAY95-15.06.40

FED. ROAD DIST. NO.	STATE	FED. AID PROJ. NO.	FISCAL YEAR	SHEET NO.	TOTAL SHEETS
HAWAII	HAW.	I-H3-1(75) UNIT III	1994	130	353

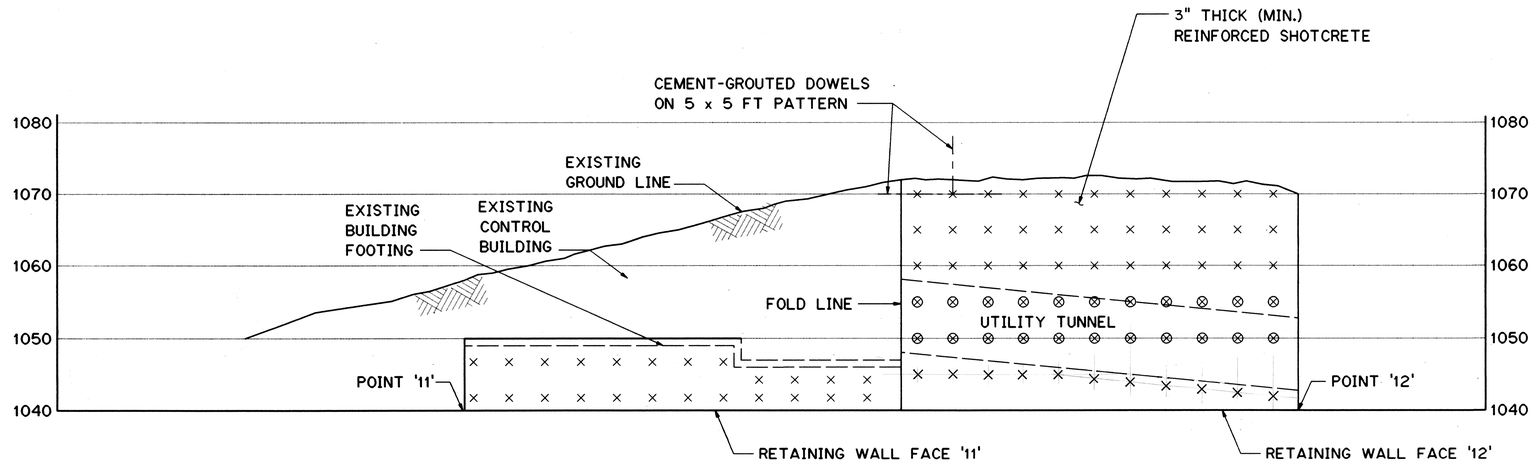

DEVELOPED ELEVATION ABOVE EL. 1040

REFERENCE PLAN:

1. EXISTING UTILITY TUNNEL GROUND SUPPORT
   FAIP NO. I-H3-1(64)
   • 158/FT6

LEGEND:

× 20'-0" LONG NO. 10 DOWEL

⊗ 8'-0" LONG NO. 9 DOWEL

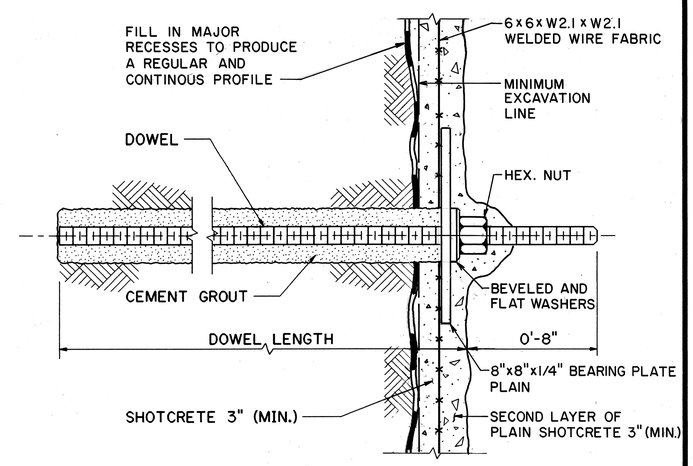

DETAIL 1
NTS

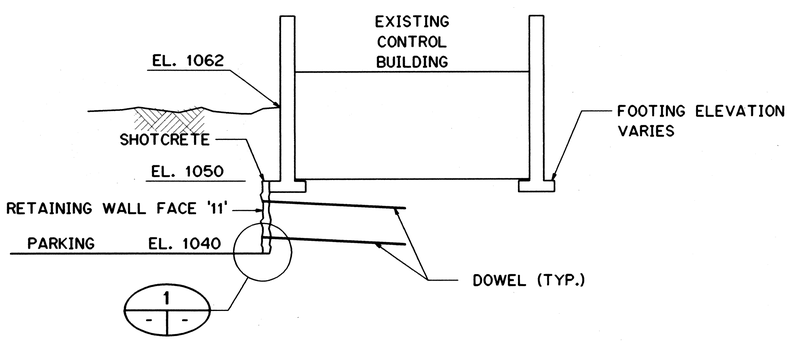

SECTION A
3F1 3F3

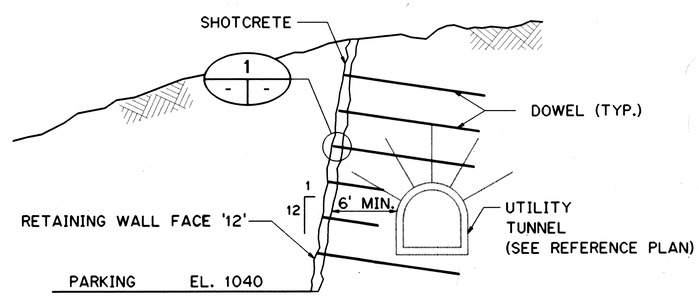

SECTION B
3F1 3F3

4/18/96	DCN 75-001: REVISED DETAIL "1" PER RESPONSE TO RFI NO. 4097-09
10/27/95	ADDENDUM 2 - CHANGED REINFORCED SHOTCRETE THICKNESS FROM 6" TO 3" MINIMUM
DATE	REVISION

STATE OF HAWAII
DEPARTMENT OF TRANSPORTATION
HIGHWAYS DIVISION

EXCAVATION AND RETAINING WALL, EL 1040

TRAFFIC OPERATIONS CENTER EXPANSION
H-3 FINISH (UNIT III)
FAIP NO. I-H3-1(75), UNIT III
T.K. TUNNEL/ACCESS ROADS

SCALE: 1" = 10' DATE: JUN 1995

SHEET NO. 3F3 OF 8 SHEETS

GRAPHIC SCALE
10' 0' 10' 20'
1" = 10'

CLAYTON S. MIMURA
LICENSED PROFESSIONAL ENGINEER
No. 4176-C
HAWAII, U.S.A.

THIS WORK WAS PREPARED BY ME OR UNDER MY SUPERVISION

Clayton S. Mimura

ORIGINAL PLAN		DATE
	SURVEY PLOTTED BY	
	DRAWN BY A. KORBMACHER	JAN 95
NOTE BOOK	TRACED BY	JAN 95
	DESIGNED BY D. OYENUGA	JAN 95
NO.	QUANTITIES BY	
	CHECKED BY G. BOYCE	JAN 95

HERNANDEZ ELWOOD:::2410:IDWG.GEOJGEOTT.FGB71 23MAY95-15.08.40

FED. ROAD DIST. NO.	STATE	FED. AID PROJ. NO.	FISCAL YEAR	SHEET NO.	TOTAL SHEETS
HAWAII	HAW.	I-H3-1(75) UNIT III	1994	131	353

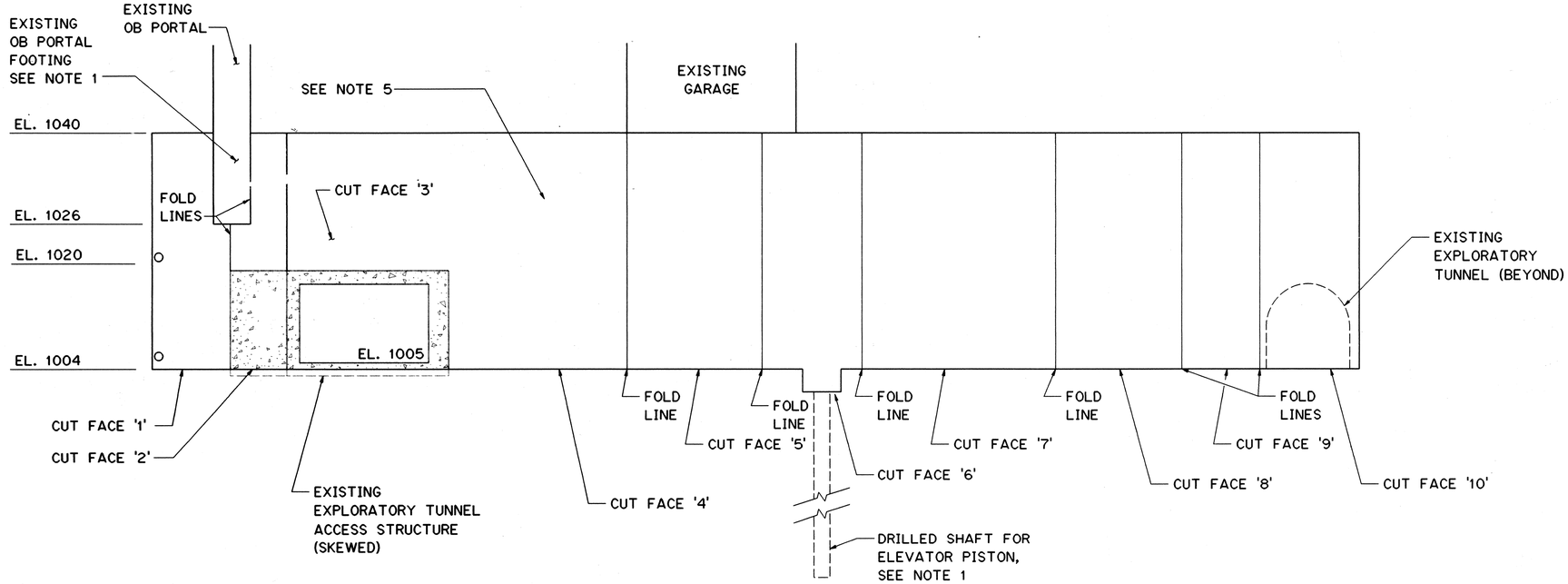

DEVELOPED ELEVATION BELOW EL. 1040

SCALE: 1" = 10'

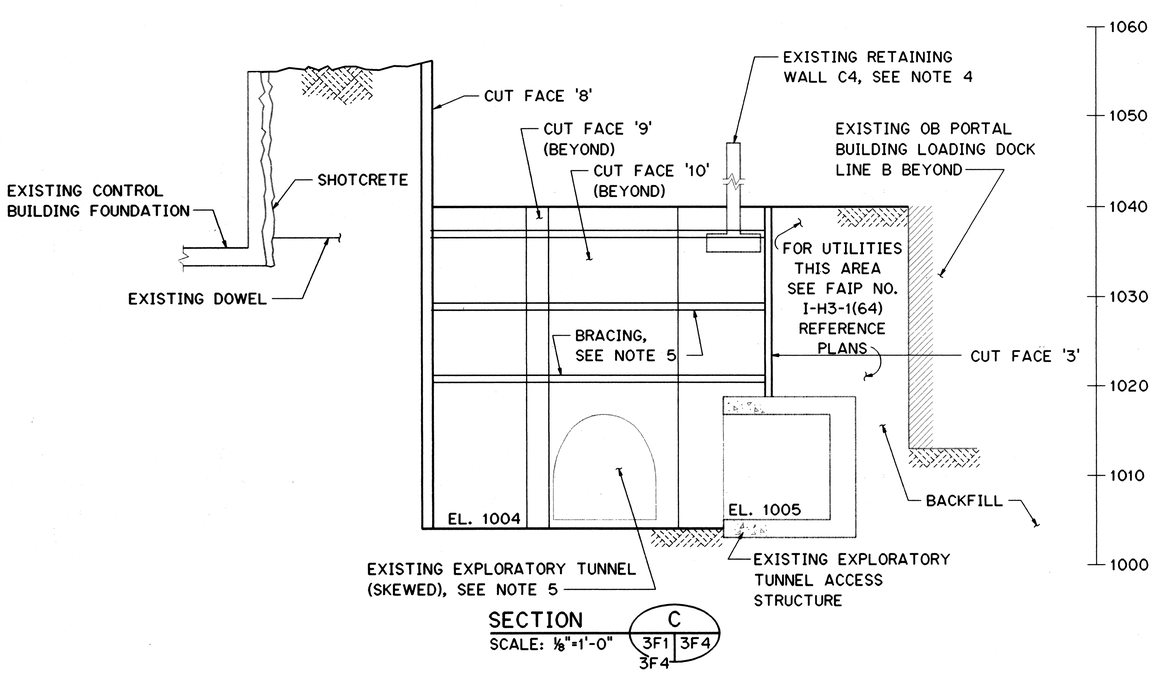

SECTION C

SCALE: ⅛"=1'-0"

3F1 | 3F4
3F4

REFERENCE CONTRACT DOCUMENTS:

1. EXISTING EXPLORATORY TUNNEL GROUND SUPPORT
   - FAIP NO. I-H3-1(37)
   - TRANS KOOLAU EXPLORATORY TUNNEL HALAWA APPROACH AND TUNNELS GEOLOGY
2. LOCATION OF UTILITIES
   - FAIP NO. I-H3-1(64)

REFERENCE PLANS:

1. RETAINING WALL C4
   FAIP NO. I-H3-1(64)
   - 276/SA9
   - 227(SA10)

NOTES:

1. CONDUCT OPERATIONS AS TO PREVENT SETTLEMENT OF EXISTING PORTAL BUILDING FOUNDATIONS.
2. WHERE LOOSE BACKFILL MATERIAL OR LOOSE SOIL IS ENCOUNTERED, USE APPROPRIATE MEANS OF GROUND SUPPORT.
3. SEE SHT. NO. 3F2 FOR DOWELS AND OTHER MEANS OF GROUND SUPPORT INSTALLED IN RETAINED CUTS DURING CONSTRUCTION OF THE EXISTING EXPLORATORY TUNNEL ACCESS STRUCTURE.
4. REMOVE REMNANTS OF RETAINING WALL C4 PRIOR TO EXCAVATION.
5. EXCAVATION SUPPORT AT CUT FACES SHALL BE DESIGNED AND STAMPED BY A CIVIL ENGINEER REGISTERED IN THE STATE OF HAWAII AND RETAINED BY THE CONTRACTOR.
6. FILL WAS PLACED IN THE AREA INDICATED DURING CONSTRUCTION OF EXISTING CONTROL BUILDING.

GRAPHIC SCALE
8' 4' 0' 8' 16'
⅛" = 1'-0"
10' 0' 10' 20'
1" = 10'

CLAYTON S. HIMURA LICENSED PROFESSIONAL ENGINEER No.4178-C HAWAII, U.S.A.

THIS WORK WAS PREPARED BY ME OR UNDER MY SUPERVISION

Clayton S. Himura

DATE	REVISION

STATE OF HAWAII
DEPARTMENT OF TRANSPORTATION
HIGHWAYS DIVISION

PIT EXCAVATION BELOW EL 1040-1

TRAFFIC OPERATIONS CENTER EXPANSION
H-3 FINISH (UNIT III)
FAIP NO. I-H3-1(75), UNIT III
T.K. TUNNEL/ACCESS ROADS

SCALE: AS NOTED DATE: JUN 1995

SHEET NO. 3F4 OF 8 SHEETS

ORIGINAL PLAN		SURVEY PLOTTED BY	A. KORBMACHER	DATE JAN 95
		DRAWN BY	" " " "	
NOTE BOOK		TRACED BY	D. OYENUGA	JAN 95
		DESIGNED BY	" " " "	
		QUANTITIES BY	G. BOYCE	JAN 95
NO.		CHECKED BY	" " " "	

HERNANDEZ ELWOOD:::2410:IDWG.GEOJGE012.FGB71 16MAY95-13.11.10

FED. ROAD DIST. NO.	STATE	FED. AID PROJ. NO.	FISCAL YEAR	SHEET NO.	TOTAL SHEETS
HAWAII	HAW.	I-H3-1(75) UNIT III	1994	132	353

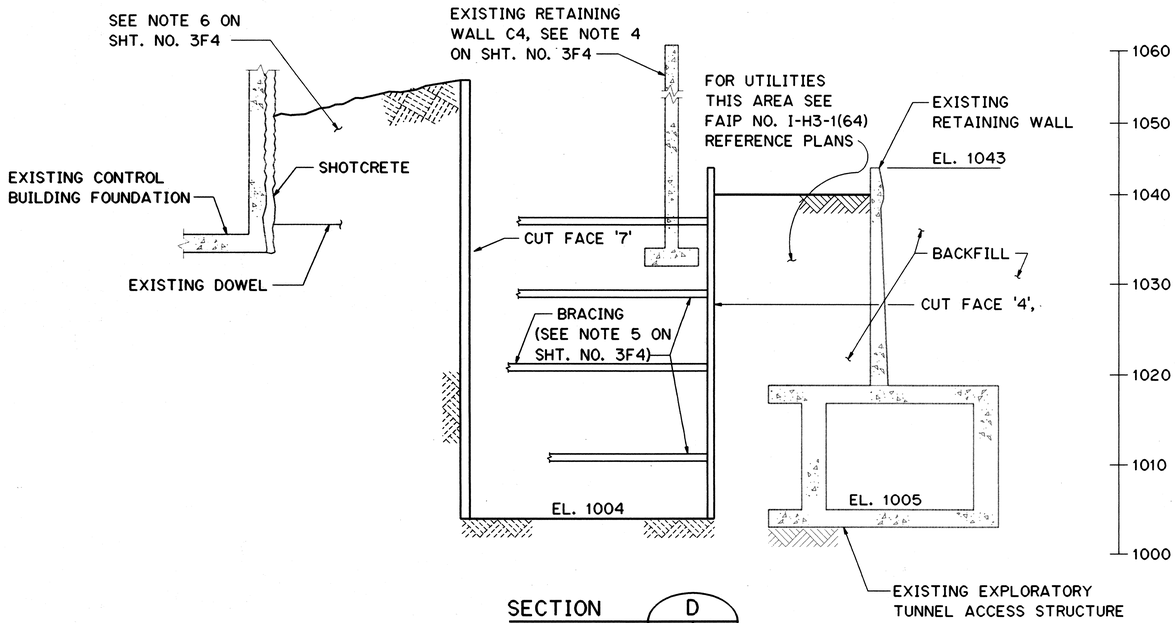

SECTION D
SCALE: 1/8"=1'-0"
3F1 | 3F5

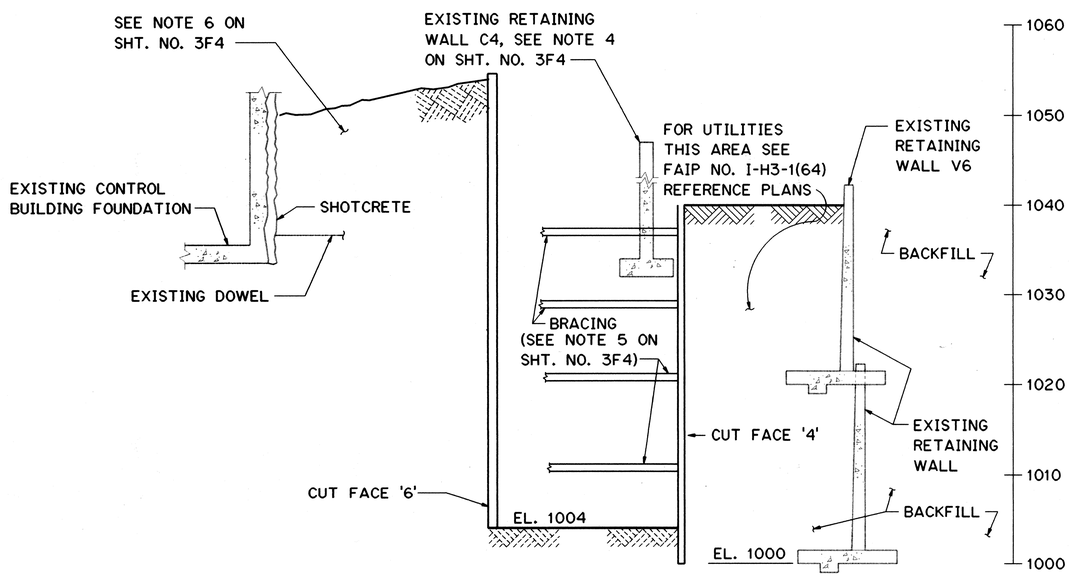

SECTION E
SCALE: 1/8"=1'-0"
3F1 | 3F5

NOTE:

1. SEE SHT. NO. 3F4 FOR NOTES.

GRAPHIC SCALE
8' 4' 0' 8' 16'
1/8" = 1'-0"

CLAYTON S. MIMURA
LICENSED PROFESSIONAL ENGINEER
No.4176-C
HAWAII, U.S.A.

THIS WORK WAS PREPARED BY ME OR UNDER MY SUPERVISION
Clayton S. Mimura

DATE	REVISION
10/13/95	ADDENDUM I

STATE OF HAWAII
DEPARTMENT OF TRANSPORTATION
HIGHWAYS DIVISION

PIT EXCAVATION BELOW EL 1040 - 2

TRAFFIC OPERATIONS CENTER EXPANSION
H-3 FINISH (UNIT III)
FAIP NO. I-H3-1(75), UNIT III
T.K. TUNNEL/ACCESS ROADS

SCALE: 1/8" = 1'-0" DATE: JUN 1995

SHEET NO. 3F5 OF 8 SHEETS

ADD. 132

ORIGINAL PLAN			
NOTE BOOK			
NO.	SURVEY PLOTTED BY	A. KORBMACHER	JAN 95
	DRAWN BY	"	"
	TRACED BY	D. OYENUGA	JAN 95
	DESIGNED BY	"	"
	QUANTITIES BY	G. BOYCE	JAN 95
	CHECKED BY	"	"

HERNANDEZ ELWOOD:::2410:IDWG.GEO3GE018.FGB71 16MAY95-09.49.20

FED. ROAD DIST. NO.	STATE	FED. AID PROJ. NO.	FISCAL YEAR	SHEET NO.	TOTAL SHEETS
HAWAII	HAW.	I-H3-1(75) UNIT III	1994	133	353

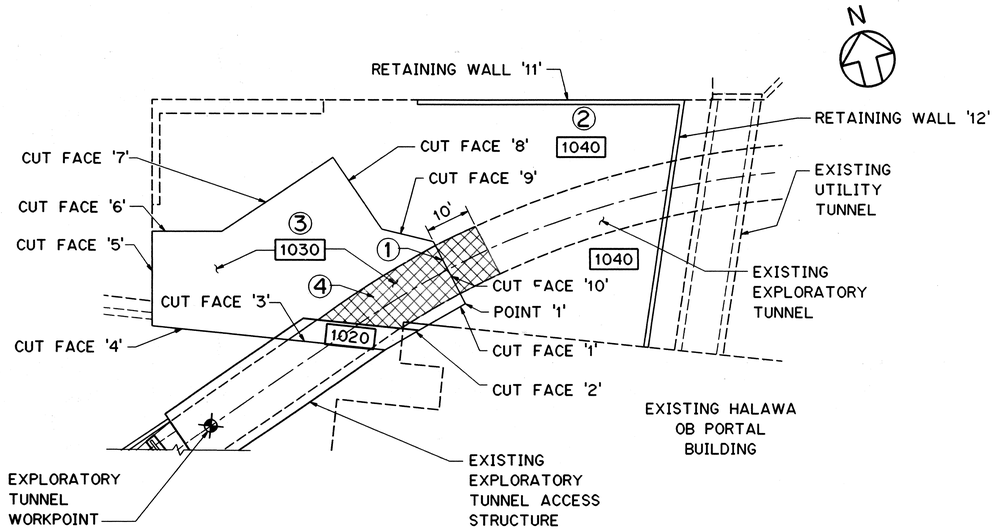

EXCAVATION STAGES ① THROUGH ④

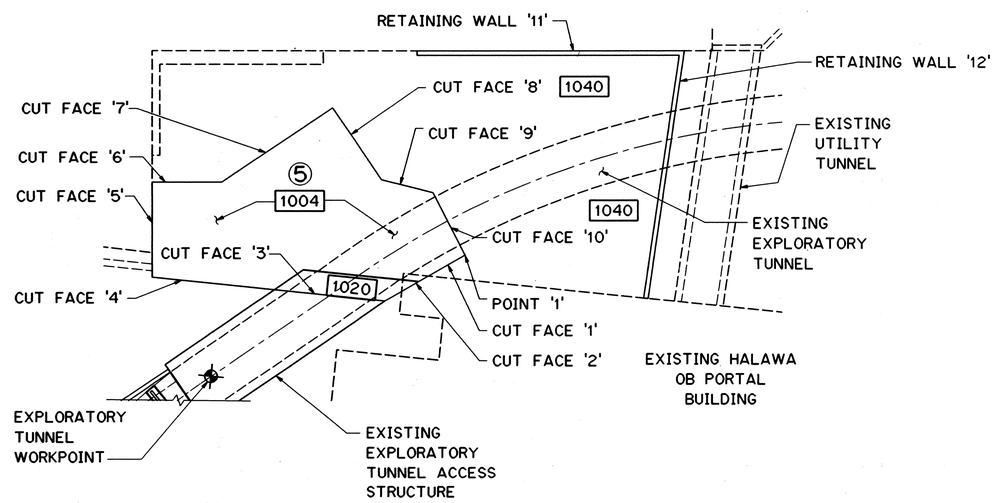

EXCAVATION STAGE ⑤

GENERAL NOTES:

1. STAGED EXCAVATION IS REQUIRED.
2. ELEVATIONS OF OPEN CUT EXCAVATION ARE SHOWN TYPICALLY AS 1004.

SUGGESTED PIT EXCAVATION CONSTRUCTION SEQUENCE

EXCAVATE IN NUMBERED SEQUENCE SHOWN:

STAGE ①: FROM WITHIN THE EXPLORATORY TUNNEL AT THE CORRESPONDING STATION OF CUT FACE '10', SAW-CUT THROUGH THE SHOTCRETE INSTALLED FOR GROUND SUPPORT OF THE EXPLORATORY TUNNEL.

STAGE ②: EXCAVATE THE KNOLL TO EL. 1040.

STAGE ③: EXCAVATE PIT DOWN TO EL. 1030. SEE SHEET NO. 3F2 FOR EXISTING DOWELS WITHIN PIT.

STAGE ④: AS EXCAVATION PROCEEDS TO EL. 1030, PROVIDE FOR PROTECTION FROM SUDDEN COLLAPSE OF EXPLORATORY TUNNEL WITHIN THE PIT EXCAVATION, BY BACKFILLING THE TUNNEL FROM INVERT TO CROWN TO 10 FEET BEYOND THE SAW CUT. THE CONTRACTOR'S PROPOSED METHOD FOR BACKFILLING, OR OTHER APPROVED SHORING METHODS, WITHIN THE EXPLORATORY TUNNEL, SHALL BE SUBJECT TO REVIEW BY THE ENGINEER.

STAGE ⑤: EXCAVATE PIT DOWN TO FINAL GRADE ELEVATION.

LEGEND

SUGGESTED LIMITS OF TUNNEL BACKFILL

ORIGINAL PLAN		DATE
SURVEY PLOTTED BY	A. KORBMACHER	JAN 95
DRAWN BY	"	"
TRACED BY	"	"
DESIGNED BY	D. OYENUGA	JAN 95
QUANTITIES BY	"	"
CHECKED BY	G. BOYCE	JAN 95
NOTE BOOK		
NO.		

GRAPHIC SCALE
16' 0' 16' 32' 48'
1" = 16'

THIS WORK WAS PREPARED BY ME OR UNDER MY SUPERVISION

CLAYTON S. MIMURA LICENSED PROFESSIONAL ENGINEER No.4176-C HAWAII, U.S.A.

DATE	REVISION

STATE OF HAWAII
DEPARTMENT OF TRANSPORTATION
HIGHWAYS DIVISION

SUGGESTED PIT EXCAVATION SEQUENCE

TRAFFIC OPERATIONS CENTER EXPANSION
H-3 FINISH (UNIT III)
FAIP NO. I-H3-1(75), UNIT III
T.K. TUNNEL/ACCESS ROADS

SCALE: 1" = 16'-0" DATE: JUN 1995

SHEET NO. 3F6 OF 8 SHEETS

HERNANDEZ ELWOOD:::2410:IDWG.GEOIGE015.FGB71 07JUN95-10:35:50

FED. ROAD DIST. NO.	STATE	FED. AID PROJ. NO.	FISCAL YEAR	SHEET NO.	TOTAL SHEETS
HAWAII	HAW.	I-H3-1(75) UNIT III	1994	134	353

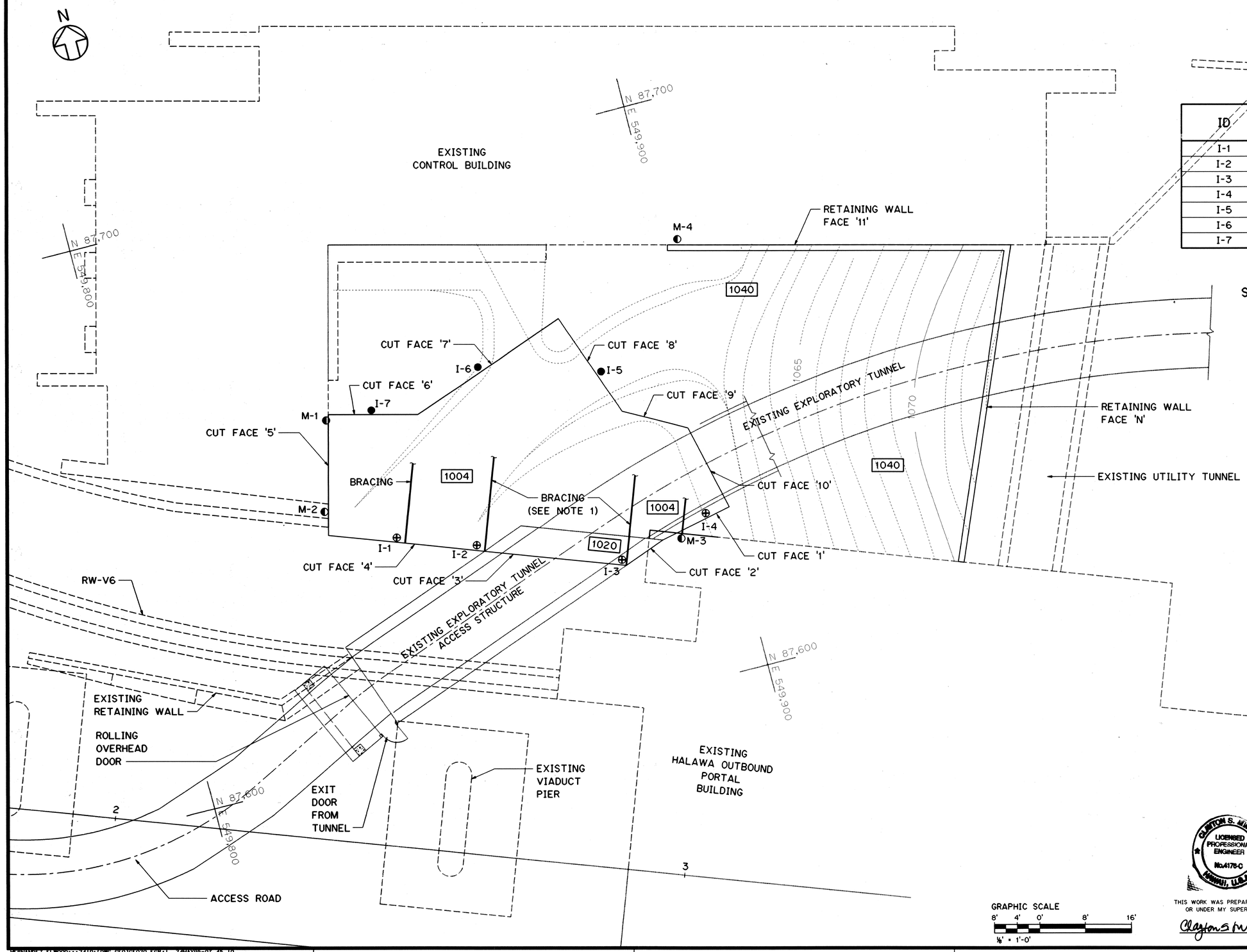

INCLINOMETER SCHEDULE

ID	COORDINATES		DEPTH
	NORTHING	EASTING	
I-1	N 87637.56	E 549842.77	50 FT
I-2	N 87632.81	E 549855.97	50 FT
I-3	N 87624.02	E 549879.87	50 FT
I-4	N 87628.15	E 549896.16	50 FT
I-5	N 87656.62	E 549884.58	50 FT
I-6	N 87662.77	E 549863.95	50 FT
I-7	N 87660.12	E 549844.08	50 FT

STRUCTURE SETTLEMENT MARKER SCHEDULE

ID	COORDINATES	
	NORTHING	EASTING
M-1	N 87660.37	E 549835.97
M-2	N 87645.09	E 549831.70
M-3	N 87624.98	E 549890.92
M-4	N 87675.46	E 549903.31

NOTE:

1. INSTALL PAIRS OF VIBRATING WIRE STRAIN GAGES ON STRUTS OF TEMPORARY INTERNAL BRACING.

LEGEND:

- ◐ STRUCTURE SETTLEMENT MARKER
- ⊕ INCLINOMETER ON EXCAVATION SUPPORT PILES
- ● INCLINOMETER IN THE GROUND

GRAPHIC SCALE
8' 4' 0' 8' 16'
⅛" = 1'-0"

CLAYTON S. MIMURA
LICENSED PROFESSIONAL ENGINEER
No.4176-C
HAWAII, U.S.A.

THIS WORK WAS PREPARED BY ME OR UNDER MY SUPERVISION

Clayton S Mimura

DATE	REVISION

STATE OF HAWAII
DEPARTMENT OF TRANSPORTATION
HIGHWAYS DIVISION

PIT EXCAVATION INSTRUMENTATION

TRAFFIC OPERATIONS CENTER EXPANSION
H-3 FINISH (UNIT III)
FAIP NO. I-H3-1(75), UNIT III
T.K. TUNNEL/ACCESS ROADS

SCALE: 1/8" = 1'-0" DATE: JUN 1995

SHEET NO. 3F7 OF 8 SHEETS

ORIGINAL PLAN		DATE
	SURVEY PLOTTED BY	A. KORBMACHER JAN 95
	DRAWN BY	
NOTE BOOK	TRACED BY	D. O'ENUGA JAN 95
	DESIGNED BY	
	QUANTITIES BY	G. BOYCE JAN 95
NO.	CHECKED BY	

HERNANDEZ ELWOOD:::2410:DWG.GEOJGE020.FGB71 24MAY95-07.45.16

DESIGN LATERAL PRESSURE FOR TEMPORARY SUPPORT ABOVE BOTTOM OF EXCAVATION

FED. ROAD DIST. NO.	STATE	FED. AID PROJ. NO.	FISCAL YEAR	SHEET NO.	TOTAL SHEETS
HAWAII	HAW.	I-H3-1(75) UNIT III	1994	135	353

DUE TO SOIL

MATERIAL	DEWATERED	DUE TO BENCH EXCAVATION
STRUCTURAL BACKFILL	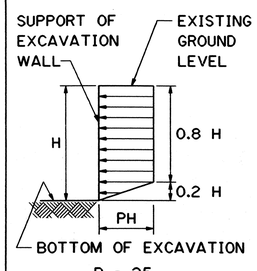	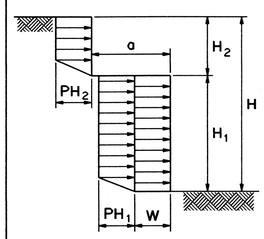

1. THE FOLLOWING DIAGRAM SHALL APPLY TO BENCHED EXCAVATIONS.
2. P AND CONFIGURATIONS OF PRESSURE DIAGRAMS SHALL BE AS DEFINED IN UNBENCHED CONDITION.
3. W IS THE PRESSURE ON H_1 DUE TO SURCHARGE PH_2, $W=4OH_2\ (1-a/H_1)$.
4. WHEN $0.0 < a/H_1 < 1.0$, APPLY BENCHED EXCAVATION DIAGRAM. WHEN $a/H_1 > 1.0$, APPLY BENCHED EXCAVATION DIAGRAM WITH W=0.

DUE TO TRAFFIC AND CONSTRUCTION EQUIPMENT SURCHARGE

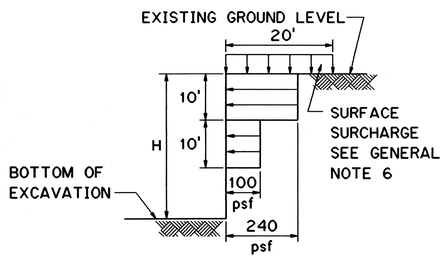

DESIGN PASSIVE RESISTANCE BELOW BOTTOM OF EXCAVATION

WEATHERED SAPROLITE

RETAINED DEWATERED

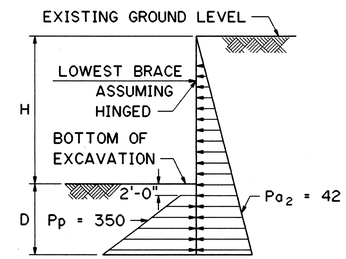

DESIGN VERTICAL ALLOWABLE SUPPORT CAPACITY

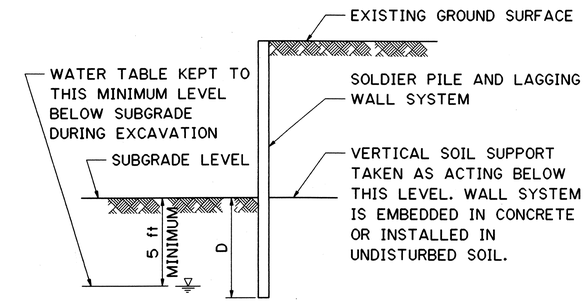

WALL SYSTEM	STRUCTURAL BACKFILL	UNITS	REMARKS
SOLDIER PILE	0.35(b + d) x D	KIPS PER PILE	b, d

THE CONTRACTOR SHALL VERIFY BY APPROPRIATE FIELD MEASUREMENTS, DURING CONSTRUCTION, THE ADEQUACY OF THE INSTALLED VERTICAL SUPPORT SYSTEM.

IF SOLDIER PILE IS SET IN A CONCRETE ENCASEMENT, SUBSTITUTE 3.14R FOR (d + b) ABOVE, WHERE R = RADIUS OF CONCRETE ENCASEMENT, IN FEET.

NOTES:

1. FOR A SOLDIER PILE AND TIMBER LAGGING SHEETING SYSTEM, ACTIVE PRESSURE ABOVE THE SUBGRADE ELEVATION IS TO BE APPLIED TO THE FULL PANEL WIDTH, FROM CENTER TO CENTER OF SOLDIER PILE. BELOW THE SUBGRADE, IT IS TO BE APPLIED TO THE WIDTH OF THE SOLDIER PILE OR ENCASEMENT. PASSIVE PRESSURE IS TO BE TAKEN AS ACTING ON 1.5 x DIAMETER FOR SOLDIER PILES CIRCULAR IN PLAN, 2.0 x WIDTH FOR SOLDIER PILES RECTANGULAR IN PLAN, OR 1/2 PILE SPACING, WHICHEVER IS LESS.
2. MINIMUM PENETRATIONS FOR PASSIVE RESISTANCE:
   VERTICAL RESISTING ELEMENT OF SUPPORT OF EXCAVATION WALL SYSTEM SHALL SATISFY THE PENETRATION FOUND BY ANALYSIS OUTLINED, AND SHALL HAVE A MINIMUM PENETRATION
   a. BELOW BOTTOM OF EXCAVATION DEEPER THAN 40 FEET, OF AT LEAST 12 FEET FOR SOLDIER PILES
   b. BELOW BOTTOM OF EXCAVATION LESS THAN 40 FEET, OF AT LEAST 10 FEET FOR SOLDIER PILES
   c. BELOW BOTTOM OF EXCAVATION LESS THAN 20 FEET, OF AT LEAST 8 FEET FOR SOLDIER PILES
3. IN ALL CASES PENETRATION BELOW SUBGRADE MUST ALSO SATISFY THE DESIGN VERTICAL SUPPORT CAPACITY INDICATED ABOVE.

GENERAL NOTES:

1. VALUES SHOWN FOR PRESSURE GRADIENTS Pa AND Pp ARE IN POUNDS PER SQUARE FOOT PER FOOT OF DEPTH.
2. VALUES SHOWN FOR PRESSURE INTENSITIES ARE IN POUNDS PER SQUARE FOOT.
3. VALUES FOR DISTANCES H, ETC., ARE IN FEET.
4. BRACE LEVELS ARE NOT SHOWN; THE DIAGRAMS SHOWN ABOVE FOR SUPPORT ABOVE BOTTOM OF EXCAVATION ARE APPLICABLE TO MULTIPLE-BRACED SYSTEM.
5. FOR SINGLE-BRACED SYSTEM DESIGN, USE PRESSURE DIAGRAMS FOR "DESIGN PASSIVE RESISTANCE".
6. LATERAL PRESSURE IS BASED ON AN ASSUMED TRAFFIC SURFACE SURCHARGE OF 600 PSF ACTING OVER A LIMITED INFLUENCE AREA. FOR MORE SEVERE EQUIPMENT LOADING CONDITION, SPECIAL ANALYSIS MUST BE SUMITTED BY CONTRACTOR.
7. ALL VALUES GIVEN FOR LATERAL PRESSURES ARE MINIMUM. THEY SHOULD BE INCREASED, IF REQUIRED, TO SUIT ACTUAL CONDITIONS ENCOUNTERED IN THE FIELD

SPECIAL NOTES FOR EXCAVATION AND BRACING:

1. BRACING REQUIREMENTS SHALL SATISFY THE CRITICAL LOADS DURING EXCAVATION AND THE LOADING CONDITIONS RESULTING DURING STRUCTURE INSTALLATION AND THE REMOVAL OF ANY BRACE.
2. INITIAL EXCAVATION SHALL NOT EXCEED A MAXIMUM OF 8 FEET DEPTH WITHOUT PLACING TOP BRACE.
3. AT NO TIME SHALL THE VERTCAL DISTANCE FROM LOWEST INSTALLED BRACE TO THE BOTTOM OF EXCAVATION BE ALLOWED TO EXCEED 20 FEET.
4. VERTICAL FACE CUTS EXCEEDING 5 FEET SHALL HAVE SUPPORT.
5. THE LOWEST BRACING LEVEL SHALL BE REMOVED ONLY AFTER THE GRADE SLAB WHICH ASSUMES THE BRACING FUNCTION HAS ACQUIRED THE MINIMUM COMPRESSIVE STRENGTH OF 2500 PSI AND HAS AGED A MINIMUM OF TEN (10) DAYS.
6. BRACING LEVELS ABOVE AND BELOW THE INTERMEDIATE OR ROOF SLAB WHICH ASSUMES THE BRACING FUNCTION, SHALL BE REMOVED ONLY AFTER SUCH SLAB HAS ACQUIRED THE MINIMUM COMPRESSIVE STRENGTH OF 3000 PSI AND HAS AGED A MINIMUM OF FOURTEEN (14) DAYS.

ORIGINAL PLAN		DATE
	SURVEY PLOTTED BY	
	DRAWN BY	A. KORBMACHER JAN 95
NOTE BOOK	TRACED BY	
	DESIGNED BY	D. OYENUGA JAN 95
NO.	QUANTITIES BY	
	CHECKED BY	G. BOYCE JAN 95

DATE	REVISION

STATE OF HAWAII
DEPARTMENT OF TRANSPORTATION
HIGHWAYS DIVISION

SOLDIER PILE & LAGGING
WALL DESIGN CRITERIA
TRAFFIC OPERATIONS CENTER EXPANSION
H-3 FINISH (UNIT III)
FAIP NO. I-H3-1(75), UNIT III
T.K. TUNNEL/ACCESS ROADS

NO SCALE DATE: JUN 1995

CLAYTON S. MINAGA LICENSED PROFESSIONAL ENGINEER No.4176-C HAWAII, U.S.A.

THIS WORK WAS PREPARED BY ME OR UNDER MY SUPERVISION

Clayton S. Minaga

SHEET NO. 3F8 OF 8 SHEETS

HERNANDEZ ELWOOD:::2410:IDWG.GEOJGE026.FGB71 16MAY95-13:09:20

FED. ROAD DIST. NO.	STATE	FED. AID PROJ. NO.	FISCAL YEAR	SHEET NO.	TOTAL SHEETS
HAWAII	HAW.	I-H3-1(75) UNIT III	1994	136	353

ROOM FINISH SCHEDULE

	FLOOR/BASE		WALLS/WAINSCOT		CEILING
1	2x2 CERAMIC TILE/2x2 CERAMIC TILE BASE	A	PAINTED GYPSUM BOARD/2x2 CERAMIC TILE	1	PAINTED GYPSUM BOARD
2	CONCRETE WITH HARDENER	B	SANDBLASTED CONCRETE	2	SANDBLASTED CONCRETE
3.	PAINTED CONCRETE	C	PAINT	3	CONCRETE
4.	CONCRETE/ VINYL BASE	D	PAINTED GYPSUM BOARD	4	ACOUSTIC TILE
5.	VINYL COMPOSITION TILE/VINYL BASE	E.	VINYL WALL COVERING	5.	METAL DECKING
6.	CARPET/ VINYL BASE	F	PAINTED CONCRETE/2x2 CERAMIC TILE	6	PAINTED CONCRETE
7.	CONCRETE WITH SPECIAL WATERPROOF COATING	G.	CONCRETE WITH SPECIAL WATERPROOF COATING	7	PLASTER SOFFIT
8.	VINYL COMPOSITION TELE/VINYL PASE	J.	ACOUSTICAL WALL PANEL	8	PAINTED CEMENT PLASTER (STUCCO)
		H.	CONCRETE		

PLAN INDICATION:

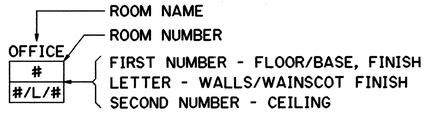

DOOR TYPES

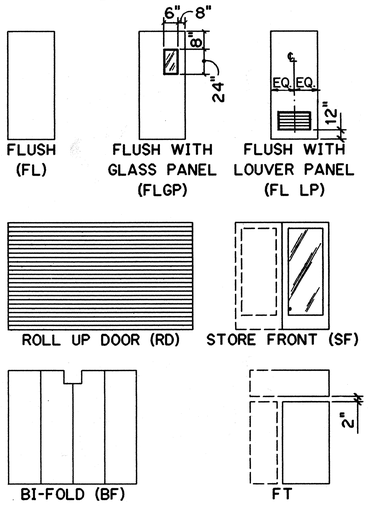

DOOR SCHEDULE

1. PLAN INDICATORS:

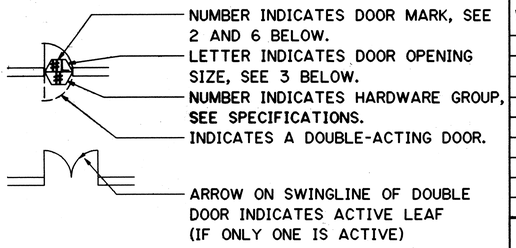

2. USE OF DOOR SCHEDULE:
   A. LOCATE DOOR MARK ON SCHEDULE. ALL DOOR MARKS ON SCHEDULE MAY NOT HAVE BEEN USED.
   B. FADING MATERIAL IS NOTED IN APPROPRIATE COLUMN UNDER DOOR MARKS SECTION OF DOOR SCHEDULE.
   C. READ ACROSS SCHEDULE FROM DOOR MARK FOR DOOR TYPE NOTED IN TYPE COLUMN.
   D. READ ACROSS SCHEDULE FROM DOOR MARK FOR GLASS IN DOOR NOTED IN GLASS COLUMN.
   E. READ ACROSS SCHEDULE FROM DOOR MARK FOR FIRE RATING NOTED IN FIRE RATING COLUMN.
   F. READ ACROSS SCHEDULE FROM DOOR MARK FOR REMARKS. INFORMATION MAY INCLUDE DOOR FACING MATERIAL OF DOOR MARKS IN "OTHER" COLUMN AND/OR CONSTRUCTION, FACING, OR FINISH OTHER THAN TYPICAL.

3. DOOR OPENING SCHEDULE:

A. 2'-8" x 7'-0"	K. 12'-0" x 12'-0"
B. 3'-0" x 7'-0"	L. 8'-0" x 7'-0"
C. 3'-0" x 8'-0"	M. 3'-0" x 8'-0" (10')
D. 5'-0" x 7'-0"	N. 3'-0" x 8'-0" (10')
E. 6'-0" x 7'-0"	P. 10'-0" x 12'-0"
F. 6'-0" x 8'-0"	Q. 3'-0" x 8'-0" (12')
G. 8'-0" x 10'-0"	R. 12'-0" x 15'-6"
H. 12'-0" x 10'-0"	S. 3'-0" x 6'-8"
J. 11'-0" x 12'-0"	T. 5'-10" x 7'-0"

4. ALL DOORS SHALL BE 1¾" THICH U.N.O..

5. TYPICAL WOOD FACING: RED OAK, STAIN GRADE.

6. TYPICAL DOOR CONSTRUCTION (U.N.O. ON SCHEDULE):
   WOOD: SOLID WOOD CORE. FIRE RESISTIVE CORE FOR FIRE RATED DOORS (DOORS WITH A RATING OF 20 MINUTES OR MORE).
   HOLLOW METAL: STEEL

7. TYPICAL DOOR FINISH (U.N.O. ON SCHEDULE):
   WOOD: STAINED S.S: STAINLESS STEEL
   HOLLOW METAL: STEEL

8. ABBREVIATIONS:

FL: FLUSH	CL IN: CLEAR INSULATING
LV: LOUVER	BF: BIFOLD GATE
SP: SPECIAL	L PL: CLEAR PLATE
TEMP: TEMPERED	LP: LOUVER PANEL
FT: FLUSH TRANSOM	SF : STOREFRONT
RD: ROLLING DOOR	(x'): OVERALL HEIGHT WITH TRANSOM
CL W: CLEAR WIRE	

DOOR MARKS							
WOOD	HOLLOW METAL	S.S.	ALUM./ OTHER	TYPE	GLASS	FIRE RATING	REMARKS
1	2	3	4	FL	-	-	-
5	6	7	8	FL	-	1 HR.	-
9	10	11	12	FLLP	-	1 HR.	-
13	14	15	16	FLLP	-	-	-
17	18	19	20	FLGP	-	1 HR.	-
21	22	23	24	SFFT	TEMP.	-	GL. TRANSOM

DOOR SCHEDULE (cont.)

DOOR MARKS							
WOOD	HOLLOW METAL	S.S.	ALUM./ OTHER	TYPE	GLASS	FIRE RATING	REMARKS

PARTITION LEGEND

NO.	CONFIGURATION
1	NON-RATED: 4⅞", ⅝" GYP. BD., BOTH SIDES; 3⅝" METAL STUDS @ 16" O.C.; SOUND BATT INSULATION
1A	SAME AS ABOVE EXCEPTING INSULATION
2	1 HOUR RATED: 4⅞", ⅝" GYP. BD., BOTH SIDES; 3⅝" METAL STUDS @ 16" O.C.; SOUND BATT INSULATION
2A	SAME AS ABOVE EXCEPTING INSULATION
3	FURRING: 1½", ⅝" GYP. BD. ON ⅞" FURRING; CLIPS @ 16" O.C.
4	FURRING: 2⅝", ⅝" GYP. BD. ON ⅞" FURRING; 2" RIGID BOARD INSULATION
4A	SAME AS ABOVE EXCEPT W/ ACOUSTICAL PANEL
5	PIPE CHASE: 1'-0", GUSSET; ⅝" GYP. BD. ON ⅞" FURRING; SOUND BATT INSULATION
6	1 HOUR SHAFT WALL: 4⅝", 1" LINER BOARD; 4" CH STUDS @ 24" O.C.; ⅝" TYPE "X" GYP. BD.
6A	SAME AS ABOVE EXCEPT W/ ACOUST. WALL PANEL
7	FURRING: 4⅞", ⅝" GYP. BD., BOTH SIDES; 3⅝" METAL STUDS @ 16" O.C.; SOUND BATT INSULATION
7A	SAME AS ABOVE EXCEPT W/ ACOUST. WALL PANEL

PARTITION LEGEND (cont.)

NO.	CONFIGURATION
8	MOVABLE WALL SYSTEM: 2¼", FACTORY FINISHED

WINDOW AND STOREFRONT FRAME TYPES

- SEE SHEET NO. 3A17.

MATERIALS LEGEND

- RANDOM BOARD TEXTURE (ELEVATIONS)
- SANDBLAST TEXTURE (ELEVATIONS)
- EARTH (LOOSE FILL)
- EARTH (COMPACTED)
- STONE/GRAVEL/AGGREGATE
- SANDFILL
- CONCRETE
- METAL (LARGE SCALE)
- METAL (SMALL SCALE)
- ROUGH WOOD (CONTINUOUS)
- ROUGH WOOD (DISCONTINUOUS)
- FINISH WOOD
- PLYWOOD
- GYPSUM BOARD (LARGE SCALE)
- RIGID INSULATION (LARGE SCALE)
- INSULATION (BATT OR LOOSE FILL)
- CERAMIC TILE
- CARPET AND PAD
- GLAZING
- CEILING ACCESS PANEL
- JOINT FILLER
- RESILIENT FLOORING
- VAPOR/MOISTURE BARRIER
- C.M.U. (CONCRETE MASONRY UNITS)
- METAL STUD WALL
- PLASTIC/COMPOSITE/ MISCELLANEOUS

ABBREVIATIONS

FOR DRAWINGS 3A1 - 3A22

ADD'L	ADDITIONAL
AFF	ABOVE FINISHED FLOOR
ALUM	ALUMINUM
BD	BOARD
BLDG	BUILDING
D	DEEP
DIM	DIMENSION
EL	ELEVATION
ELEC	ELECTRICAL
ELEV	ELEVATION
EXP	EXPANSION
GA	GAUGE
GYP	GYPSUM
H	HIGH
HP	HIGH POINT
IB	INBOUND
L	LONG
MAX	MAXIMUM
MFRS	MANUFACTURER'S
JT	JOINT
MIN	MINIMUM
NIC	NOT IN CONTRACT
OB	OUTBOUND
OD	OVERFLOW DRAIN
RD	ROOF DRAIN
REBAR	STEEL REINFORCING BAR
SB	SPLASH BACK
SIM	SIMILAR
TOC	TOP OF CONCRETE, TRAFFIC OPERATIONS CENTER
TYP	TYPICAL
WC	WATER CLOSET
ED	WOOD
WOM	WOMEN
XFMR	TRANSFORMER

DATE	REVISION
2/11/97	DCN 75-012: ADDED CEMENT PLASTER TYPE TO ROOM FINISH SCHEDULE PER RESPONSE TO RFI # 4097-104
10/13/95	ADDENDUM I

THIS WORK WAS PREPARED BY ME OR UNDER MY SUPERVISION

STATE OF HAWAII
DEPARTMENT OF TRANSPORTATION
HIGHWAYS DIVISION

LEGENDS AND SCHEDULES

TRAFFIC OPERATIONS CENTER EXPANSION
H-3 FINISH (UNIT III)
FAIP NO. I-H3-1(75), UNIT III
T.K. TUNNEL/ACCESS ROADS

SCALE: NONE DATE: JUN 1995

SHEET NO. 3A1 OF 22 SHEETS

ORIGINAL PLAN | NOTE BOOK | NO.

		DATE
SURVEY PLOTTED BY	B. BUNYI	NOV 94
DRAWN BY		
TRACED BY	C. FREY	NOV 94
DESIGNED BY		
QUANTITIES BY	R. HOWELL	DEC 94
CHECKED BY		

BUNYI ELWOOD::2410:[DWG.ARCHJAR016.FGB71 01FEB95-14.04.00

ADD. 136

FED. ROAD DIST. NO.	STATE	FED. AID PROJ. NO.	FISCAL YEAR	SHEET NO.	TOTAL SHEETS
HAWAII	HAW.	I-H3-1(75) UNIT III	1994	137	353

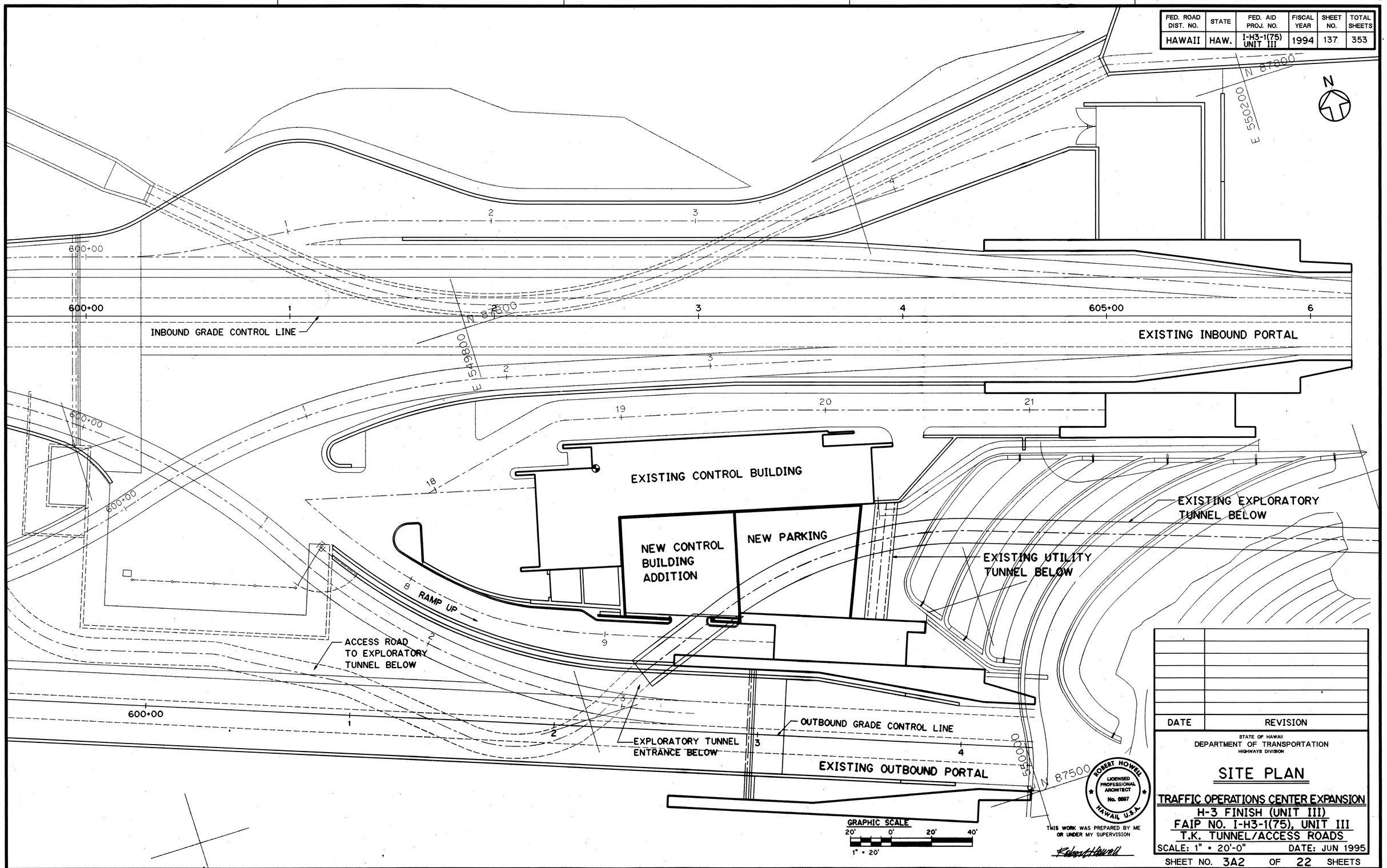

DATE	REVISION

STATE OF HAWAII
DEPARTMENT OF TRANSPORTATION
HIGHWAYS DIVISION

SITE PLAN

TRAFFIC OPERATIONS CENTER EXPANSION
H-3 FINISH (UNIT III)
FAIP NO. I-H3-1(75), UNIT III
T.K. TUNNEL/ACCESS ROADS

SCALE: 1" = 20'-0" DATE: JUN 1995

SHEET NO. 3A2 OF 22 SHEETS

SURVEY PLOTTED BY		DATE
DRAWN BY	B. BUNYI	NOV 94
TRACED BY		
DESIGNED BY	C. FREY	NOV 94
QUANTITIES BY		
CHECKED BY	R. HOWELL	DEC 94

ORIGINAL PLAN
NOTE BOOK NO.

HERNANDEZ ELWOOD::2410:IDWG.ARCHJAR005.FGB71 01FEB95-14.28.50

FED. ROAD DIST. NO.	STATE	FED. AID PROJ. NO.	FISCAL YEAR	SHEET NO.	TOTAL SHEETS
HAWAII	HAW.	I-H3-1(75) UNIT III	1994	138	353

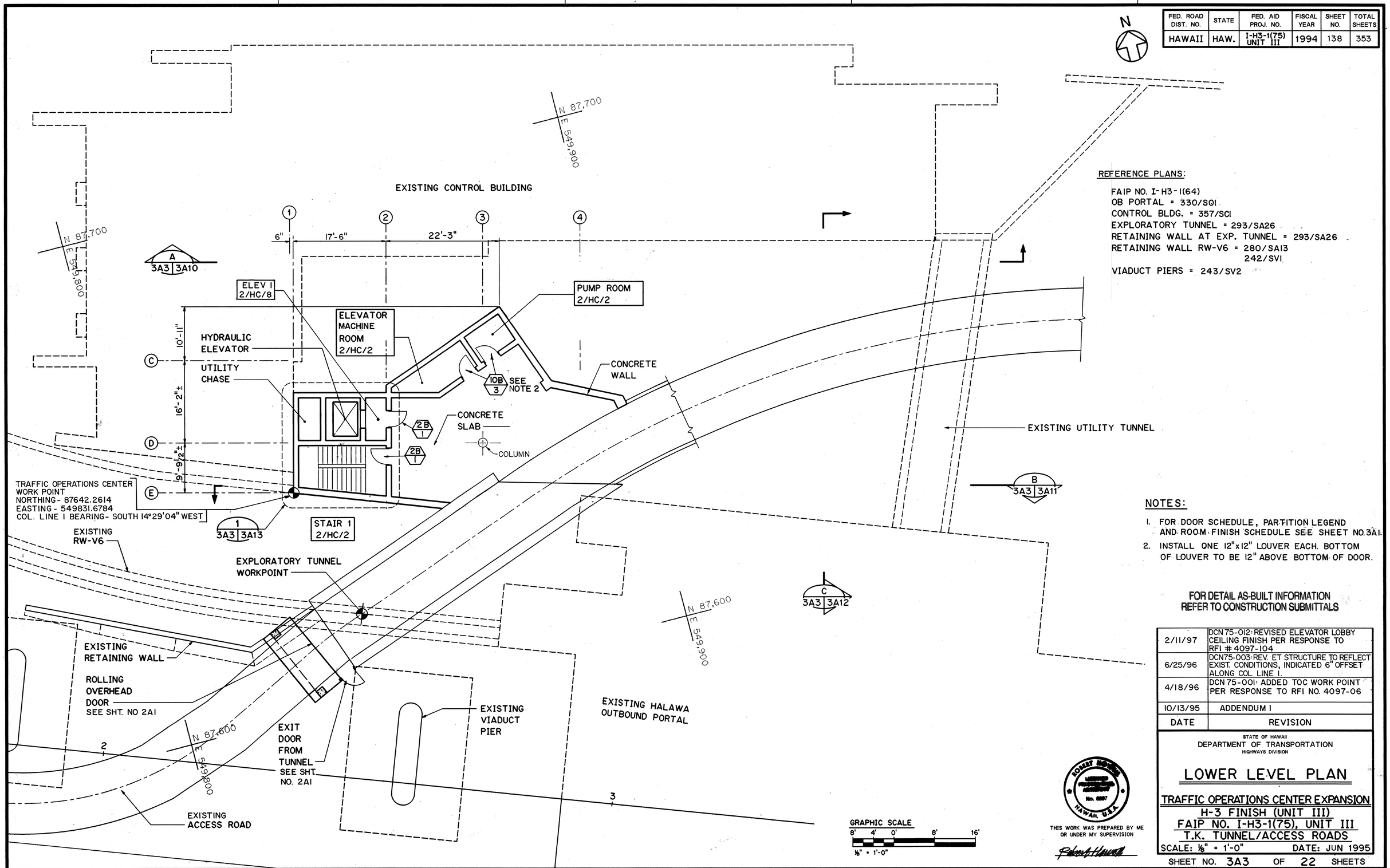

REFERENCE PLANS:

FAIP NO. I-H3-1(64)
OB PORTAL = 330/S01
CONTROL BLDG. = 357/SC1
EXPLORATORY TUNNEL = 293/SA26
RETAINING WALL AT EXP. TUNNEL = 293/SA26
RETAINING WALL RW-V6 = 280/SA13
242/SV1
VIADUCT PIERS = 243/SV2

NOTES:

1. FOR DOOR SCHEDULE, PARTITION LEGEND AND ROOM FINISH SCHEDULE SEE SHEET NO. 3A1.
2. INSTALL ONE 12"x12" LOUVER EACH. BOTTOM OF LOUVER TO BE 12" ABOVE BOTTOM OF DOOR.

FOR DETAIL AS-BUILT INFORMATION REFER TO CONSTRUCTION SUBMITTALS

DATE	REVISION
2/11/97	DCN 75-012: REVISED ELEVATOR LOBBY CEILING FINISH PER RESPONSE TO RFI # 4097-104
6/25/96	DCN75-003: REV. ET STRUCTURE TO REFLECT EXIST. CONDITIONS, INDICATED 6" OFFSET ALONG COL LINE 1.
4/18/96	DCN 75-001: ADDED TOC WORK POINT PER RESPONSE TO RFI NO. 4097-06
10/13/95	ADDENDUM 1

STATE OF HAWAII
DEPARTMENT OF TRANSPORTATION
HIGHWAYS DIVISION

LOWER LEVEL PLAN

TRAFFIC OPERATIONS CENTER EXPANSION
H-3 FINISH (UNIT III)
FAIP NO. I-H3-1(75), UNIT III
T.K. TUNNEL/ACCESS ROADS

SCALE: ⅛" = 1'-0" DATE: JUN 1995

SHEET NO. 3A3 OF 22 SHEETS

ROMAN HOWELL LICENSED PROFESSIONAL ENGINEER No. 6887 HAWAII, U.S.A.

THIS WORK WAS PREPARED BY ME OR UNDER MY SUPERVISION

		DATE
SURVEY PLOTTED BY	B. BUNYI	NOV 94
DRAWN BY	"	"
TRACED BY	C. FREY	NOV 94
DESIGNED BY	"	"
QUANTITIES BY		
CHECKED BY	B. HOWELL	DEC 94

ORIGINAL PLAN
NOTE BOOK
NO.

HERNANDEZ ELWOOD::2410:DWG.ARCH\AR001.FGB71 01FEB95-15.44.50

ADD. 138

FED. ROAD DIST. NO.	STATE	FED. AID PROJ. NO.	FISCAL YEAR	SHEET NO.	TOTAL SHEETS
HAWAII	HAW.	I-H3-1(75) UNIT III	1994	139	353

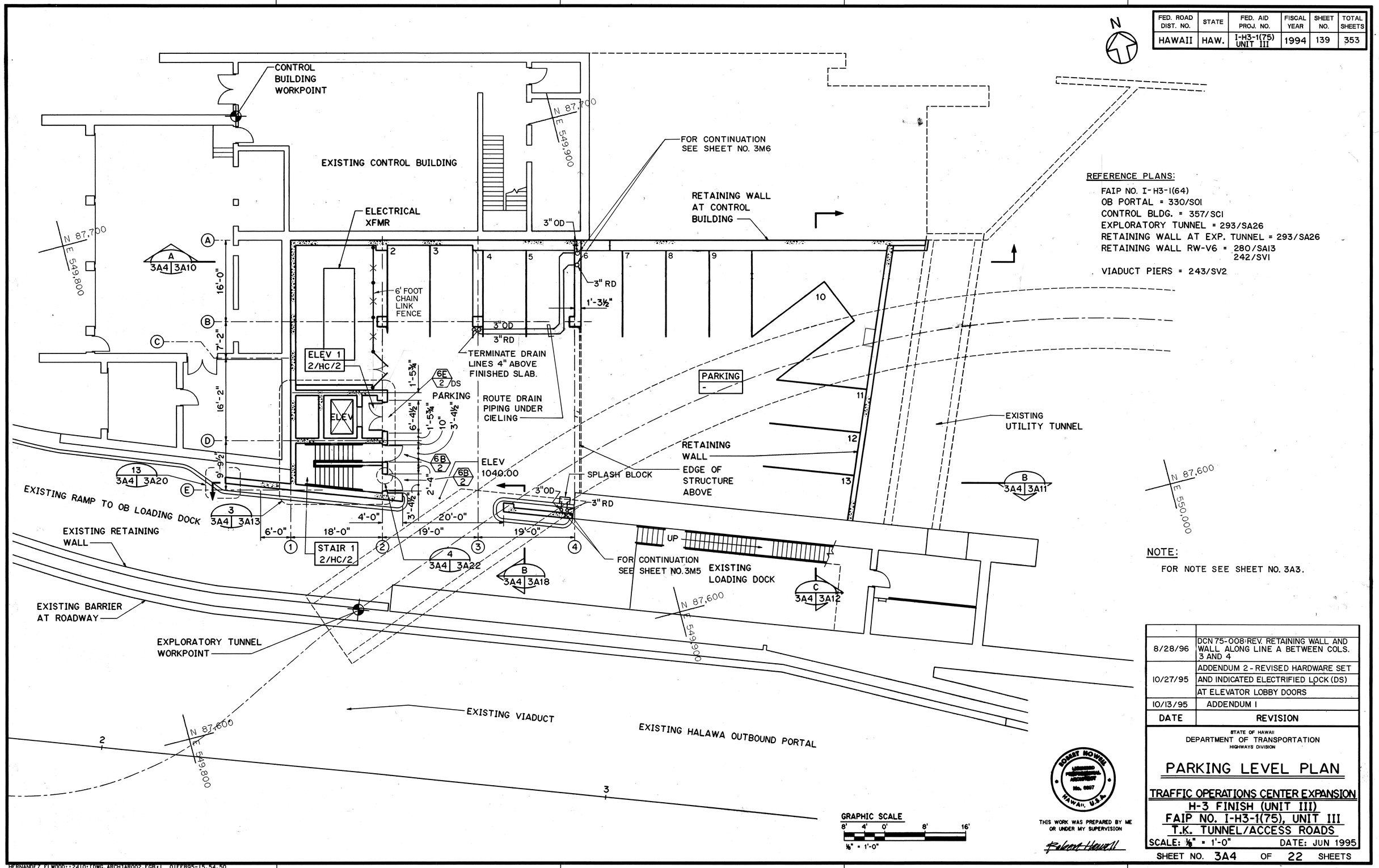

REFERENCE PLANS:

FAIP NO. I-H3-1(64)
OB PORTAL = 330/SOI
CONTROL BLDG. = 357/SCI
EXPLORATORY TUNNEL = 293/SA26
RETAINING WALL AT EXP. TUNNEL = 293/SA26
RETAINING WALL RW-V6 = 280/SAI3
242/SVI
VIADUCT PIERS = 243/SV2

NOTE:

FOR NOTE SEE SHEET NO. 3A3.

DATE	REVISION
8/28/96	DCN 75-008-REV. RETAINING WALL AND WALL ALONG LINE A BETWEEN COLS. 3 AND 4
10/27/95	ADDENDUM 2 - REVISED HARDWARE SET AND INDICATED ELECTRIFIED LOCK (DS) AT ELEVATOR LOBBY DOORS
10/13/95	ADDENDUM I

STATE OF HAWAII
DEPARTMENT OF TRANSPORTATION
HIGHWAYS DIVISION

PARKING LEVEL PLAN

TRAFFIC OPERATIONS CENTER EXPANSION
H-3 FINISH (UNIT III)
FAIP NO. I-H3-1(75), UNIT III
T.K. TUNNEL/ACCESS ROADS

SCALE: ⅛" = 1'-0" DATE: JUN 1995

ROBERT HOWELL LICENSED PROFESSIONAL ENGINEER No. 6867 HAWAII, U.S.A.

THIS WORK WAS PREPARED BY ME OR UNDER MY SUPERVISION

Robert Howell

ORIGINAL PLAN		SURVEY PLOTTED BY B. BIRKFI	DATE NOV 94
		DRAWN BY	
NOTE BOOK		TRACED BY	NOV 94
		DESIGNED BY C. FREY	
		QUANTITIES BY	
NO.		CHECKED BY R. HOWELL	DEC 94

HERNANDEZ ELWOOD::2410:IDWG.ARCHJAR002.FGB71 01FEB95-15.54.50

SHEET NO. 3A4 OF 22 SHEETS

ADD. 139

FED. ROAD DIST. NO.	STATE	FED. AID PROJ. NO.	FISCAL YEAR	SHEET NO.	TOTAL SHEETS
HAWAII	HAW.	I-H3-1(75) UNIT III	1994	140	353

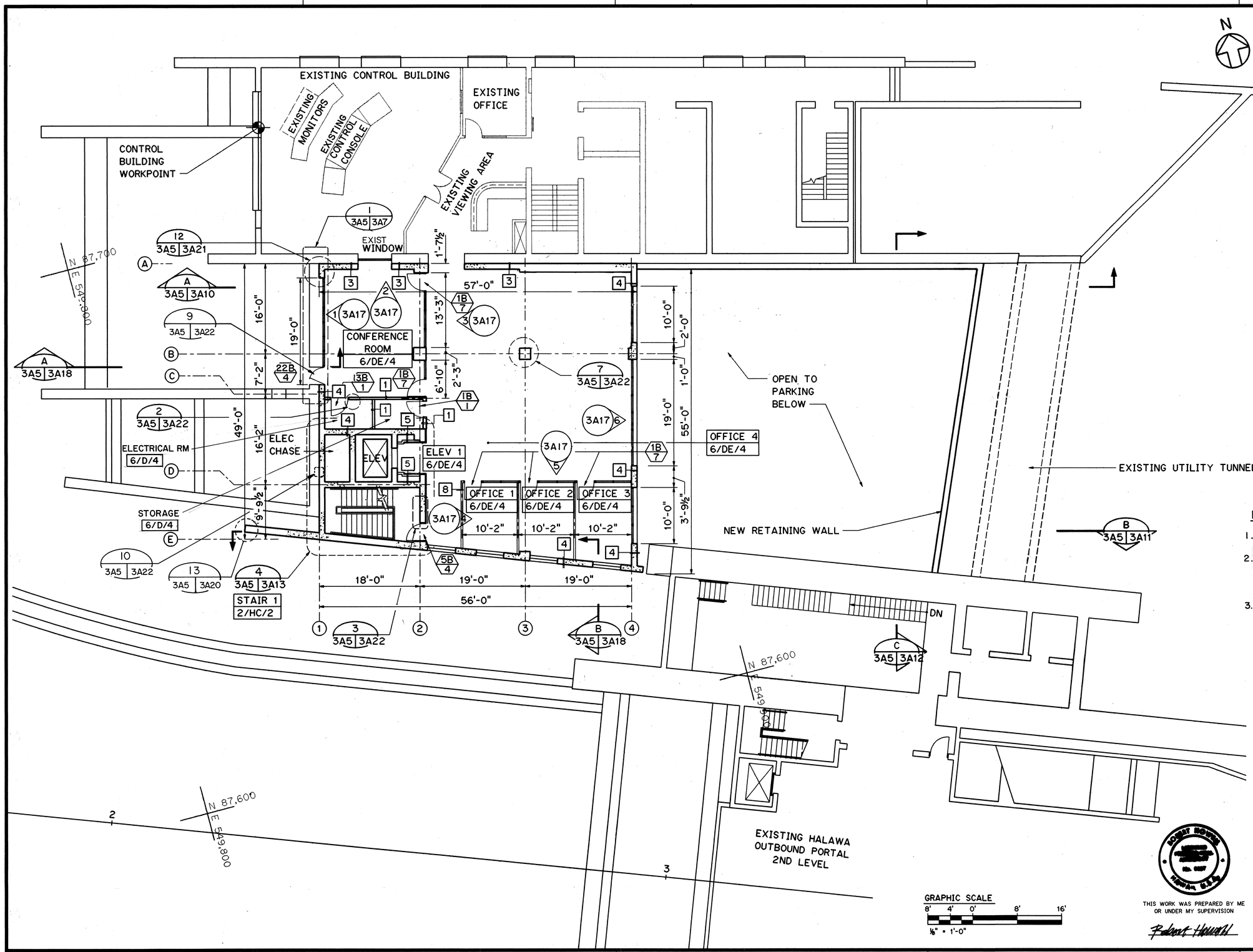

NOTES:

1. FOR NOTES SEE SHEET NO. 3A3.
2. DOOR 13B/1 INSTALL ONE 12"x 12" LOUVER. BOTTOM OF LOUVER 12" ABOVE BOTTOM OF DOOR.
3. FIRE RATING: TOC IS NOT RATED EXCEPT ELEVATOR LOBBY AND STAIRWELL WHICH ARE 1 HOUR RATED.

DATE	REVISION
8/28/96	DCN75-008 REV. WALL ALONG LINE A BETWEEN COLS 3 AND 4
10/27/95	ADDENDUM 2 - DELETED DOORS AT ELEVATOR LOBBY
10/13/95	ADDENDUM 1

GRAPHIC SCALE
8' 4' 0' 8' 16'
⅛" = 1'-0"

THIS WORK WAS PREPARED BY ME OR UNDER MY SUPERVISION

STATE OF HAWAII
DEPARTMENT OF TRANSPORTATION
HIGHWAYS DIVISION

SECOND LEVEL PLAN

TRAFFIC OPERATIONS CENTER EXPANSION
H-3 FINISH (UNIT III)
FAIP NO. I-H3-1(75), UNIT III
T.K. TUNNEL/ACCESS ROADS

SCALE: ⅛" = 1'-0" DATE: JUN 1995

SHEET NO. 3A5 OF 22 SHEETS

		DATE
ORIGINAL PLAN	SURVEY PLOTTED BY	
	DRAWN BY	B. BUNYI NOV 94
	TRACED BY	" "
NOTE BOOK	DESIGNED BY	C. FREY NOV 94
	QUANTITIES BY	" "
NO.	CHECKED BY	R. HOWELL DEC 94

BUNYI ELWOOD::2410:[DWG.ARCHJAR003.FGB]1 01FEB95-17:36:40

ADD. 140

FED. ROAD DIST. NO.	STATE	FED. AID PROJ. NO.	FISCAL YEAR	SHEET NO.	TOTAL SHEETS
HAWAII	HAW.	I-H3-1(75) UNIT III	1994	141	353

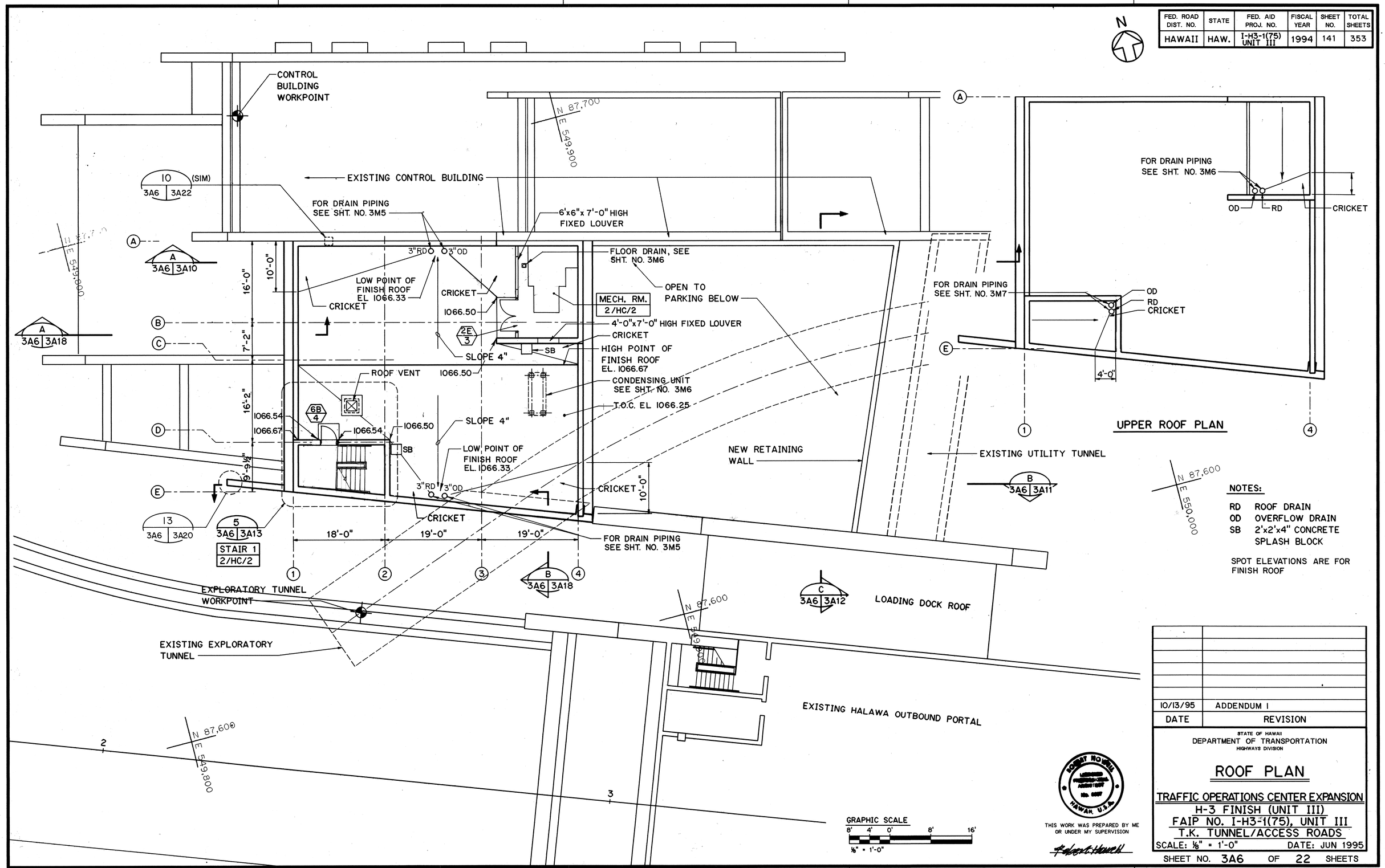

10/13/95	ADDENDUM 1
DATE	REVISION

STATE OF HAWAII
DEPARTMENT OF TRANSPORTATION
HIGHWAYS DIVISION

ROOF PLAN

TRAFFIC OPERATIONS CENTER EXPANSION
H-3 FINISH (UNIT III)
FAIP NO. I-H3-1(75), UNIT III
T.K. TUNNEL/ACCESS ROADS

SCALE: 1/8" = 1'-0" DATE: JUN 1995

SHEET NO. 3A6 OF 22 SHEETS

		DATE
SURVEY PLOTTED BY	B. BUNYI	NOV 94
DRAWN BY	"	"
TRACED BY	C. FREY	NOV 94
DESIGNED BY	"	"
QUANTITIES BY	R. HOWELL	DEC 94
CHECKED BY	"	"

ORIGINAL PLAN
NOTE BOOK
NO.

BUNYI ELWOOD::2410:[DWG.ARCHJAR004.FGB]1 01FEB95-18.44.30

ADD. 141

FED. ROAD DIST. NO.	STATE	FED. AID PROJ. NO.	FISCAL YEAR	SHEET NO.	TOTAL SHEETS
HAWAII	HAW.	I-H3-1(75) UNIT III	1994	142	353

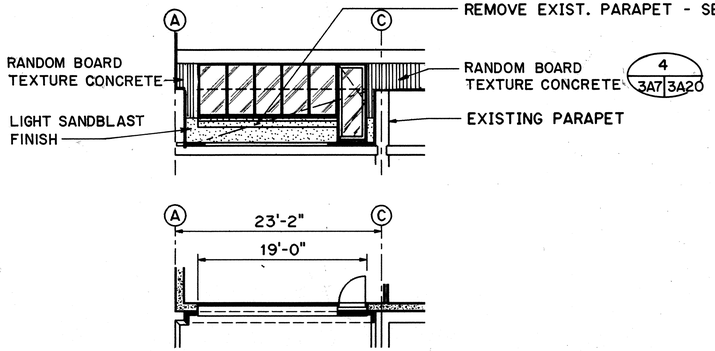

PARTIAL PLAN AND ELEVATION 1 3A5 3A7

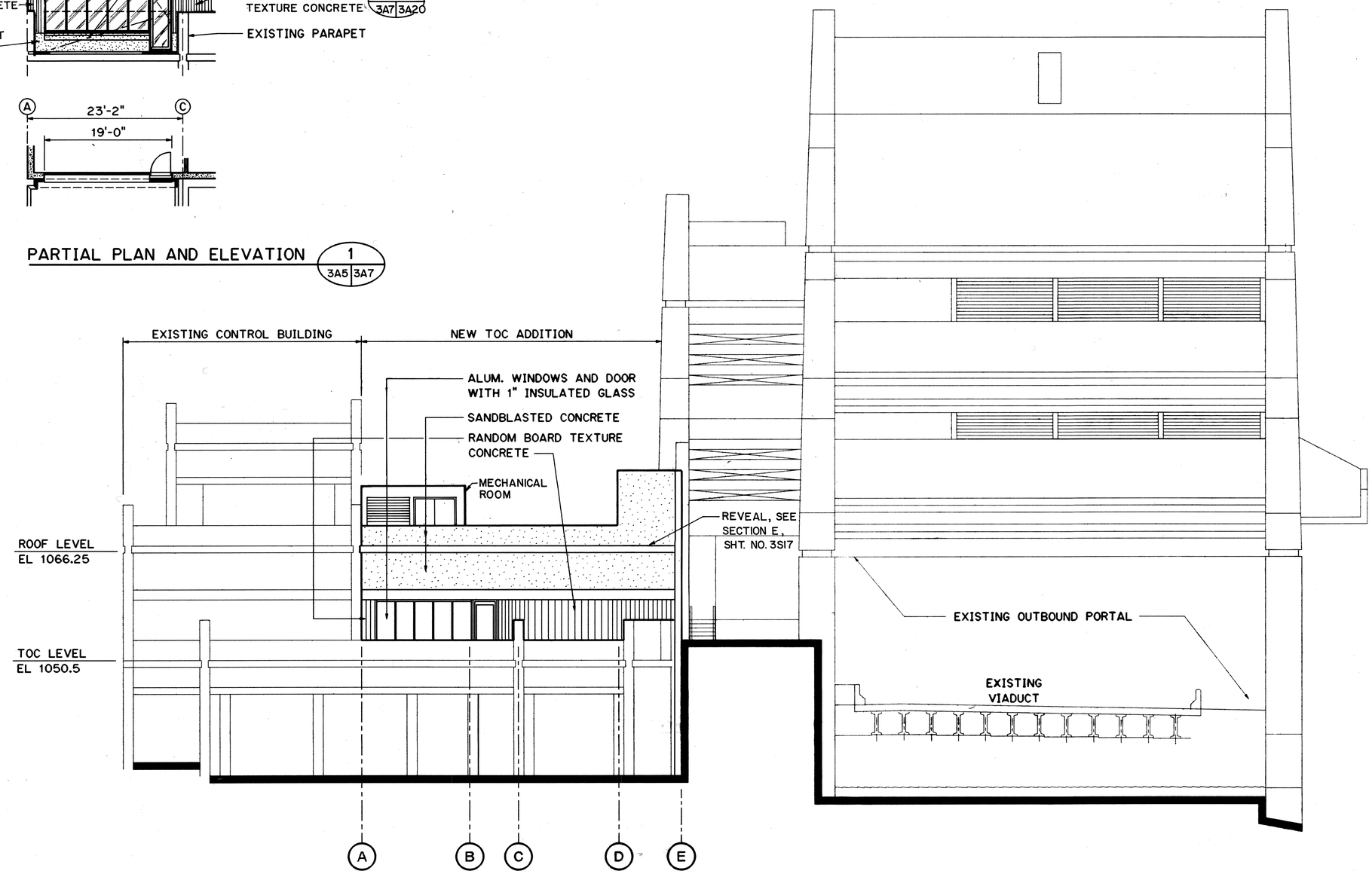

WEST ELEVATION

GRAPHIC SCALE
8' 4' 0' 8' 16'
⅛" = 1'-0"

ROBERT HOWELL LICENSED PROFESSIONAL ARCHITECT No. 6697 HAWAII, U.S.A.

THIS WORK WAS PREPARED BY ME OR UNDER MY SUPERVISION

Robert Howell

DATE	REVISION
10/13/95	ADDENDUM 1

STATE OF HAWAII
DEPARTMENT OF TRANSPORTATION
HIGHWAYS DIVISION

WEST ELEVATION

TRAFFIC OPERATIONS CENTER EXPANSION
H-3 FINISH (UNIT III)
FAIP NO. I-H3-1(75), UNIT III
T.K. TUNNEL/ACCESS ROADS

SCALE: ⅛" = 1'-0" DATE: JUN 1995

SHEET NO. 3A7 OF 22 SHEETS

		DATE
ORIGINAL PLAN	SURVEY PLOTTED BY	
	DRAWN BY B. BUNTI	NOV 94
	TRACED BY	"
NOTE BOOK	DESIGNED BY C. FREY	NOV 94
	REVIEWED BY	"
NO.	QUANTITIES BY	
	CHECKED BY R. HOWELL	DEC 94

HERNANDEZ ELWOOD::2410:DWG.ARCHJAR009.FGB71 01FEB95-14.50.40

ADD. 142

FED. ROAD DIST. NO.	STATE	FED. AID PROJ. NO.	FISCAL YEAR	SHEET NO.	TOTAL SHEETS
HAWAII	HAW.	I-H3-1(75) UNIT III	1994	143	353

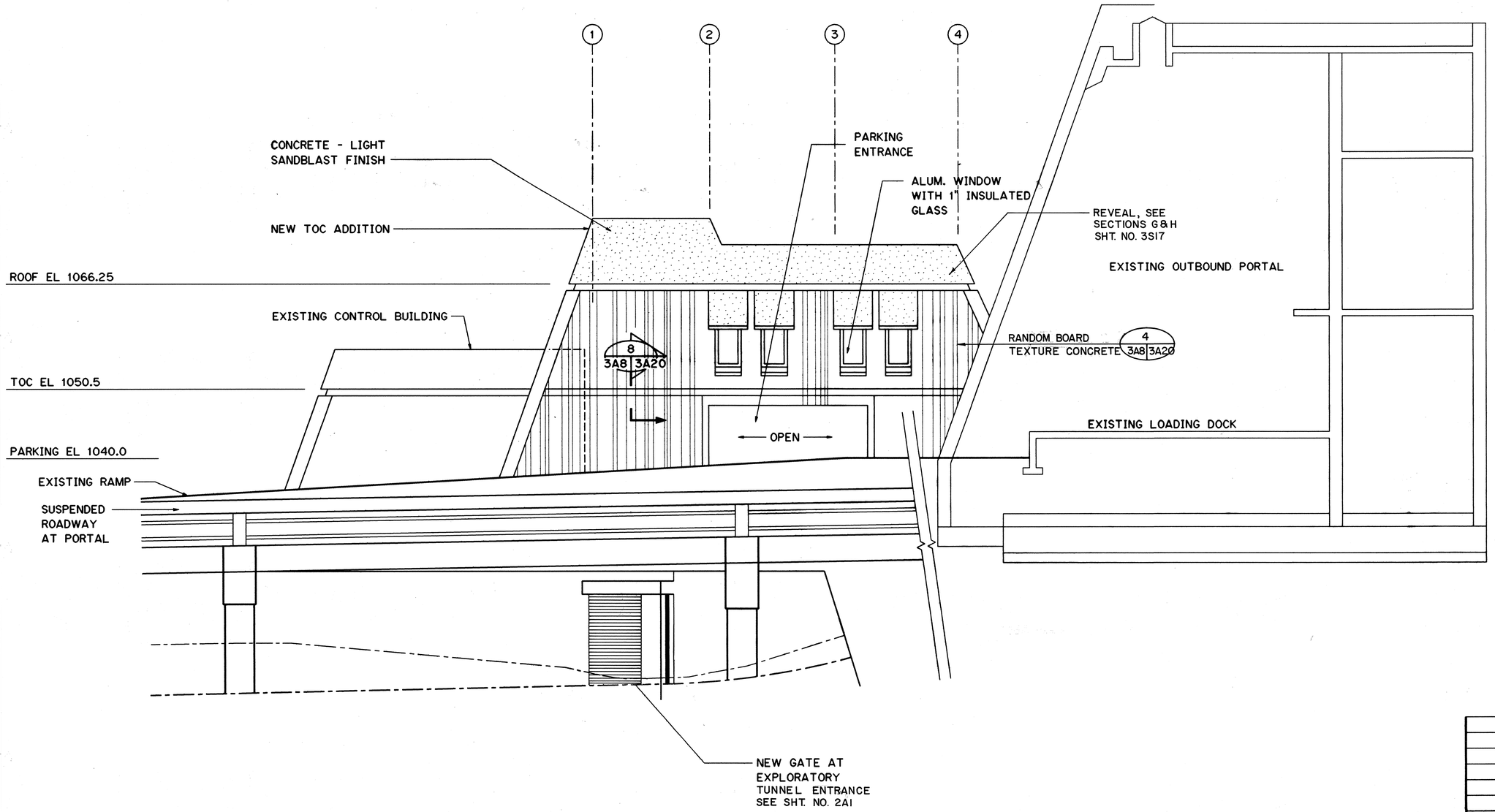

SOUTH ELEVATION

ORIGINAL PLAN		DATE
	SURVEY PLOTTED BY	
	DRAWN BY	B. BURFI NOV 94
NOTE BOOK	TRACED BY	" "
	DESIGNED BY	C. FREY NOV 94
	QUANTITIES BY	" "
NO.	CHECKED BY	R. HOWELL DEC 94

GRAPHIC SCALE
8' 4' 0' 8' 16'
⅛" = 1'-0"

ROBERT HOWELL LICENSED PROFESSIONAL ARCHITECT No. 6607 HAWAII, U.S.A.

THIS WORK WAS PREPARED BY ME OR UNDER MY SUPERVISION

Robert Howell

DATE	REVISION
10/13/95	ADDENDUM 1

STATE OF HAWAII
DEPARTMENT OF TRANSPORTATION
HIGHWAYS DIVISION

SOUTH ELEVATION

TRAFFIC OPERATIONS CENTER EXPANSION
H-3 FINISH (UNIT III)
FAIP NO. I-H3-1(75), UNIT III
T.K. TUNNEL/ACCESS ROADS

SCALE: ⅛" = 1'-0" DATE: JUN 1995

SHEET NO. 3A8 OF 22 SHEETS

HERNANDEZ ELWOOD::2410:[DWG.ARCHJAROTI.FGB]T 01FEB95-14.08.30

ADD. 143

FED. ROAD DIST. NO.	STATE	FED. AID PROJ. NO.	FISCAL YEAR	SHEET NO.	TOTAL SHEETS
HAWAII	HAW.	I-H3-1(75) UNIT III	1994	144	353

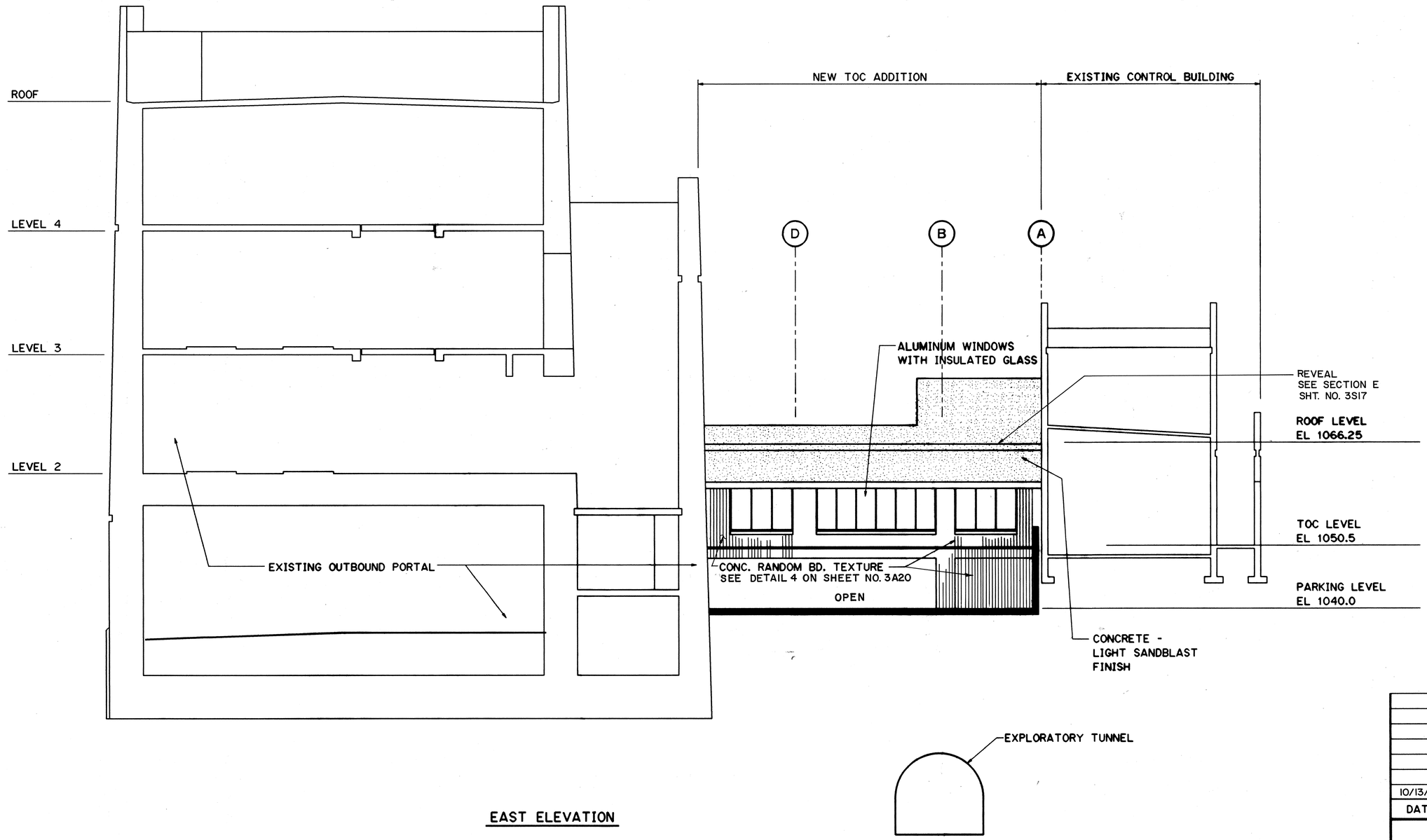

EAST ELEVATION

GRAPHIC SCALE
8' 4' 0' 8' 16'
1/8" = 1'-0"

ROBERT HOWELL LICENSED PROFESSIONAL ARCHITECT No. 6697 HAWAII U.S.A.

THIS WORK WAS PREPARED BY ME OR UNDER MY SUPERVISION

Robert Howell

DATE	REVISION
10/13/95	ADDENDUM I

STATE OF HAWAII
DEPARTMENT OF TRANSPORTATION
HIGHWAYS DIVISION

EAST ELEVATION

TRAFFIC OPERATIONS CENTER EXPANSION
H-3 FINISH (UNIT III)
FAIP NO. I-H3-1(75), UNIT III
T.K. TUNNEL/ACCESS ROADS

SCALE: 1/8" = 1'-0" DATE: JUN 1995

SHEET NO. 3A9 OF 22 SHEETS

		DATE
ORIGINAL PLAN	SURVEY PLOTTED BY	
	DRAWN BY B. BUNYI	NOV 94
	TRACED BY	"
NOTE BOOK	DESIGNED BY C. FREY	NOV 94
	REVIEWED BY	"
NO.	QUANTITIES BY	DEC 94
	CHECKED BY R. HOWELL	"

BUNYI ELWOOD::2410:[DWG.ARCHJAR012.FGB;1 02FEB95-08.23.50

FED. ROAD DIST. NO.	STATE	FED. AID PROJ. NO.	FISCAL YEAR	SHEET NO.	TOTAL SHEETS
HAWAII	HAW.	I-H3-1(75) UNIT III	1994	145	353

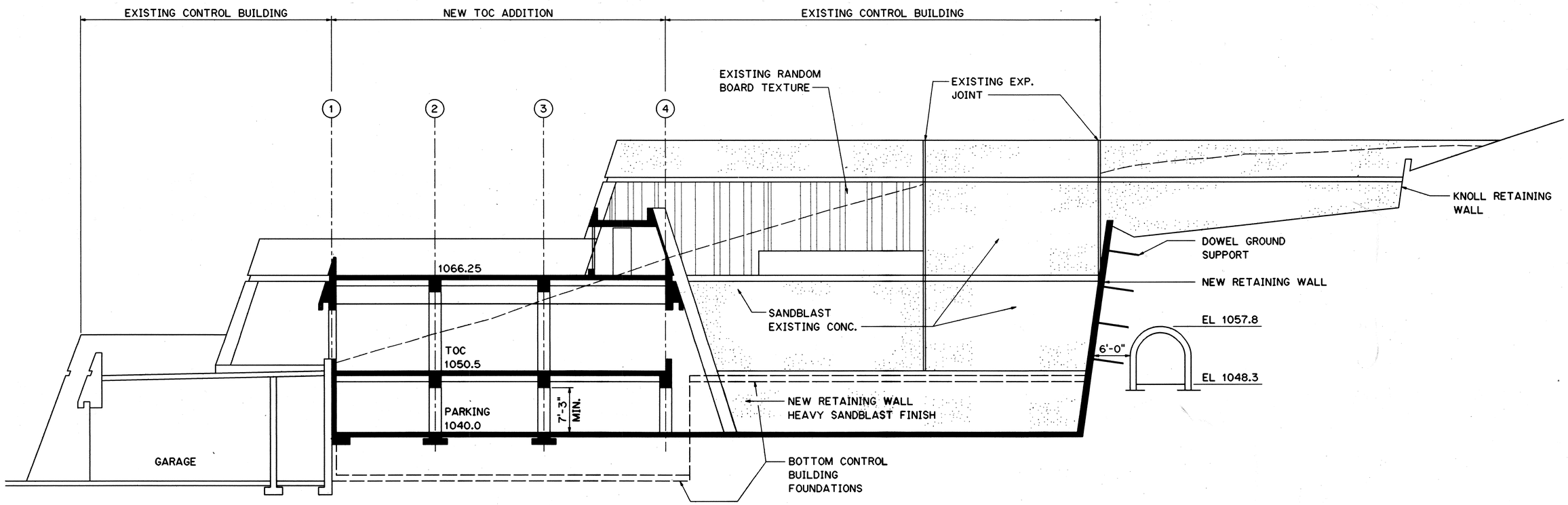

SECTION A

SCALE: 1/8" = 1'-0"

3A3 | 3A10
3A4
3A5
3A6

GRAPHIC SCALE

8' 4' 0' 8' 16'

1/8" = 1'-0"

ROBERT HOWELL LICENSED PROFESSIONAL ARCHITECT No. 5097 HAWAII, U.S.A.

THIS WORK WAS PREPARED BY ME OR UNDER MY SUPERVISION

Robert Howell

DATE	REVISION

STATE OF HAWAII
DEPARTMENT OF TRANSPORTATION
HIGHWAYS DIVISION

LONGITUDINAL SECTION AT CONTROL BUILDING

TRAFFIC OPERATIONS CENTER EXPANSION
H-3 FINISH (UNIT III)
FAIP NO. I-H3-1(75), UNIT III
T.K. TUNNEL/ACCESS ROADS

SCALE: 1/8" = 1'-0" DATE: JUN 1995

SHEET NO. 3A10 OF 22 SHEETS

ORIGINAL PLAN		DATE
	SURVEY PLOTTED BY	
	DRAWN BY	B. BUNTI NOV 94
NOTE BOOK	TRACED BY	" "
	DESIGNED BY	C. FREY NOV 94
	QUANTITIES BY	" "
NO.	CHECKED BY	B. HOWELL DEC 94

HERNANDEZ ELWOOD::2410:DWG.ARCHJAR006.PGB71 01FEB95-14.10.50

FED. ROAD DIST. NO.	STATE	FED. AID PROJ. NO.	FISCAL YEAR	SHEET NO.	TOTAL SHEETS
HAWAII	HAW.	I-H3-1(75) UNIT III	1994	146	353

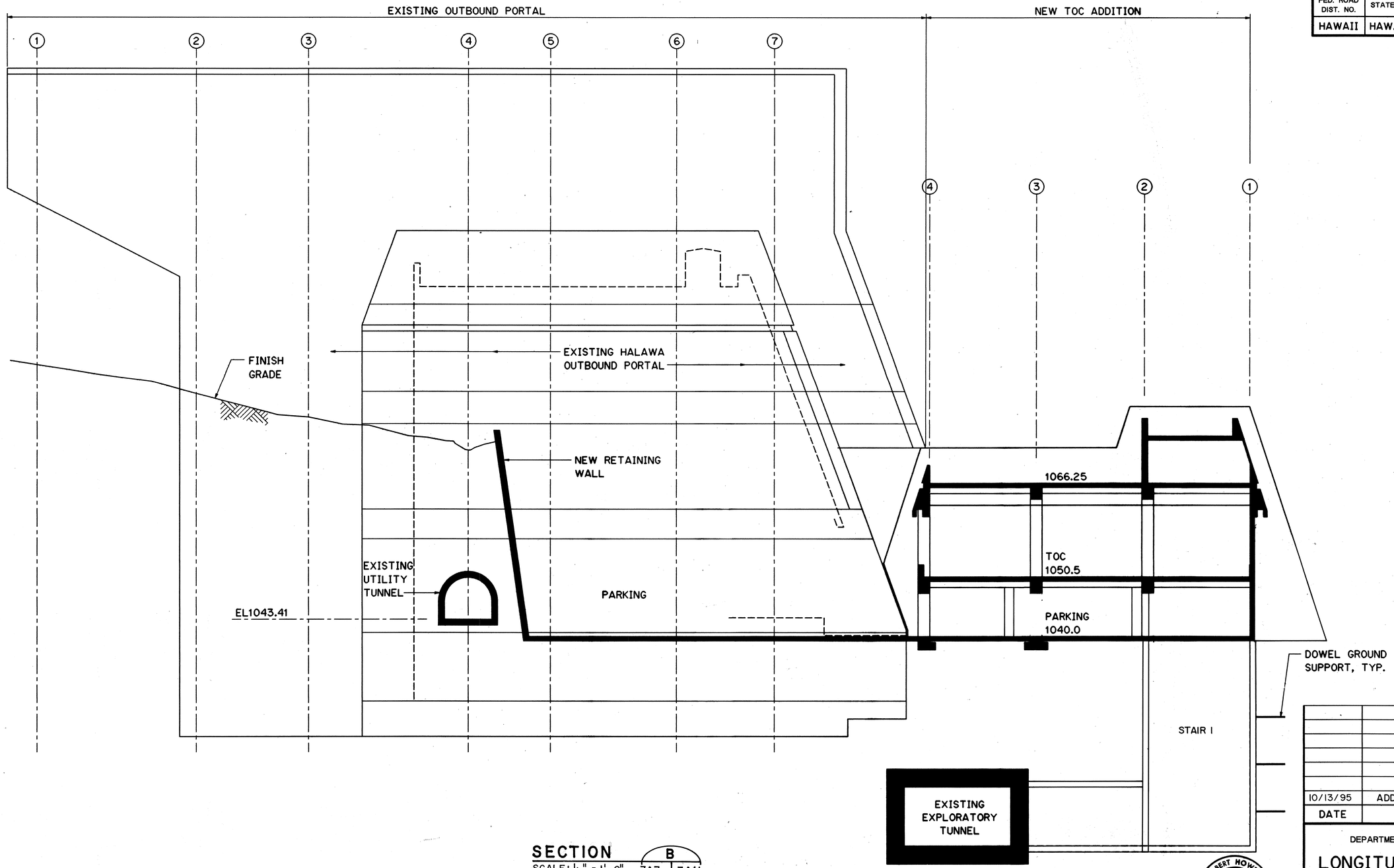

SECTION B
SCALE: 1/8" = 1'-0"
3A3 | 3A11
3A4
3A5
3A6

GRAPHIC SCALE
8' 4' 0' 8' 16'
1/8" = 1'-0"

ROBERT HOWELL LICENSED PROFESSIONAL ARCHITECT No. 6697 HAWAII, U.S.A.

THIS WORK WAS PREPARED BY ME OR UNDER MY SUPERVISION

Robert Howell

DATE	REVISION
10/13/95	ADDENDUM 1

STATE OF HAWAII
DEPARTMENT OF TRANSPORTATION
HIGHWAYS DIVISION

LONGITUDINAL SECTION AT PORTAL SECTION

TRAFFIC OPERATIONS CENTER EXPANSION
H-3 FINISH (UNIT III)
FAIP NO. I-H3-1(75), UNIT III
T.K. TUNNEL/ACCESS ROADS

SCALE: 1/8" = 1'-0" DATE: JUN 1995

SHEET NO. 3A11 OF 22 SHEETS

		DATE
SURVEY PLOTTED BY		
DRAWN BY	B. BUNYI	NOV 94
TRACED BY		
DESIGNED BY	C. FREY	NOV 94
QUANTITIES BY		
CHECKED BY	R. HOWELL	DEC 94

ORIGINAL PLAN
NOTE BOOK
NO.

BUNYI ELWOOD::2410:[DWG.ARCHJAR007.FGB7] 24JAN95-10.37.30

FED. ROAD DIST. NO.	STATE	FED. AID PROJ. NO.	FISCAL YEAR	SHEET NO.	TOTAL SHEETS
HAWAII	HAW.	I-H3-1(75) UNIT III	1994	147	353

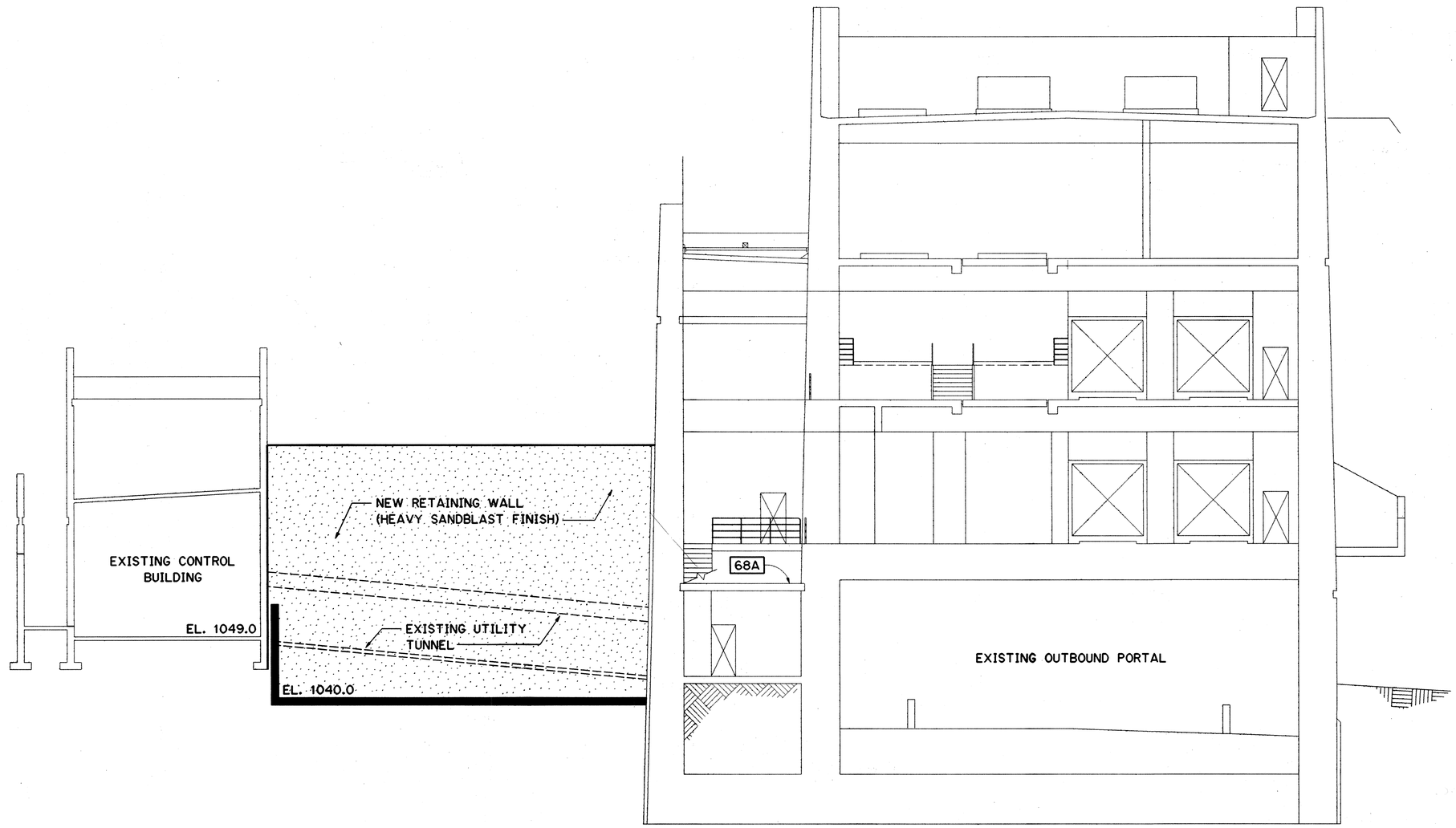

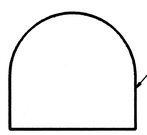

EXISTING EXPLORATORY TUNNEL

SECTION C

SCALE: 1/8" = 1'-0"

3A3 | 3A12
3A4
3A5
3A6

GRAPHIC SCALE

8' 4' 0' 8' 16'

1/8" = 1'-0"

ROBERT HOWELL
LICENSED PROFESSIONAL ARCHITECT
No. 6697
HAWAII, U.S.A.

THIS WORK WAS PREPARED BY ME OR UNDER MY SUPERVISION

Robert Howell

DATE	REVISION

STATE OF HAWAII
DEPARTMENT OF TRANSPORTATION
HIGHWAYS DIVISION

SECTION AT OB PORTAL

TRAFFIC OPERATIONS CENTER EXPANSION
H-3 FINISH (UNIT III)
FAIP NO. I-H3-1(75), UNIT III
T.K. TUNNEL/ACCESS ROADS

SCALE: 1/8" = 1'-0" DATE: JUN 1995

SHEET NO. 3A12 OF 22 SHEETS

		DATE
SURVEY PLOTTED BY		
DRAWN BY	B. BUNTI	NOV 94
TRACED BY		"
DESIGNED BY	C. FREY	NOV 94
QUANTITIES BY		"
CHECKED BY	R. HOWELL	DEC 94

ORIGINAL PLAN
NOTE BOOK
NO.

HERNANDEZ ELWOOD::2410:[DWG.ARCHJAR008.FGB71 01FEB95-14.14.00

FED. ROAD DIST. NO.	STATE	FED. AID PROJ. NO.	FISCAL YEAR	SHEET NO.	TOTAL SHEETS
HAWAII	HAW.	I-H3-1(75) UNIT III	1994	148	353

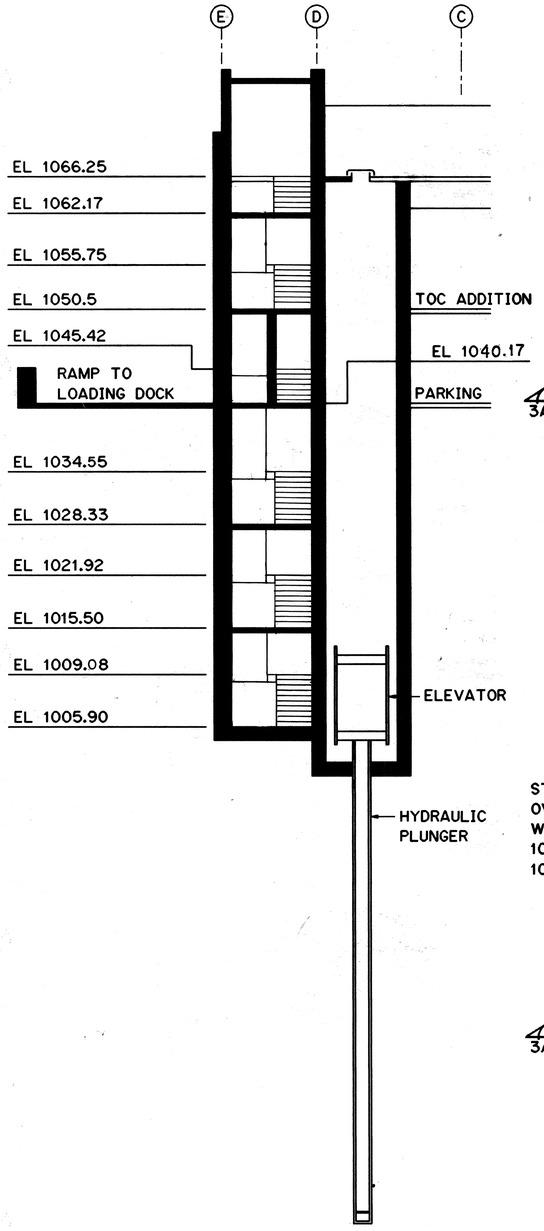

SECTION D (3A13 | 3A13)
SCALE: 1/8" = 1'-0"

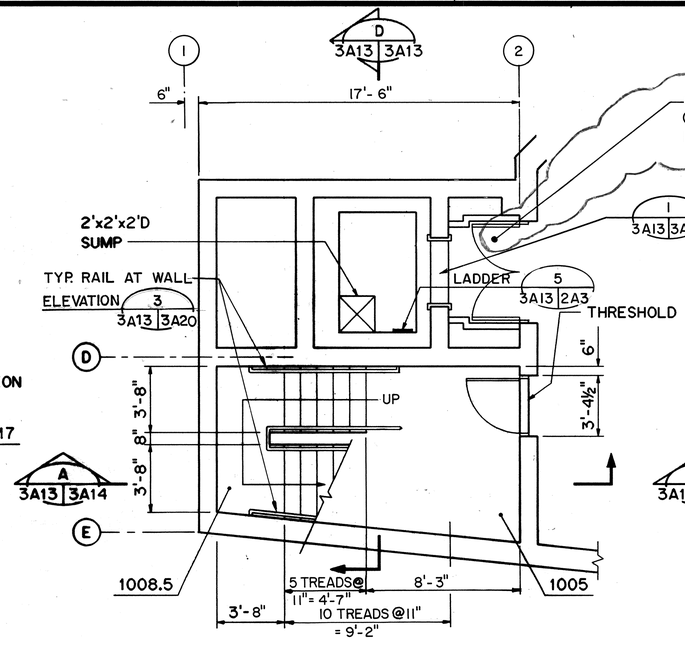

PLAN AT LEVELS 1005.90 AND 1009.08 (1 | 3A3 | 3A13)
SCALE: 1/4" = 1'-0"

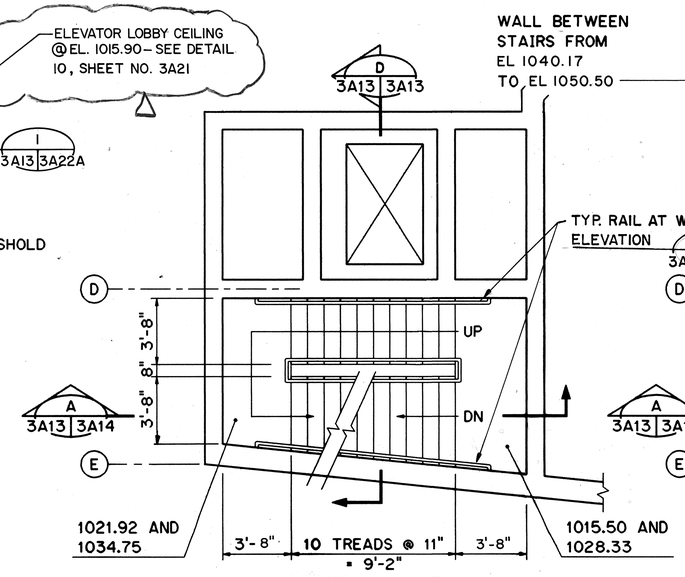

PLAN AT LEVELS 1015.50, 1021.92, 1028.33 AND 1034.55 (2 | –3A13)
SCALE: 1/4" = 1'-0"

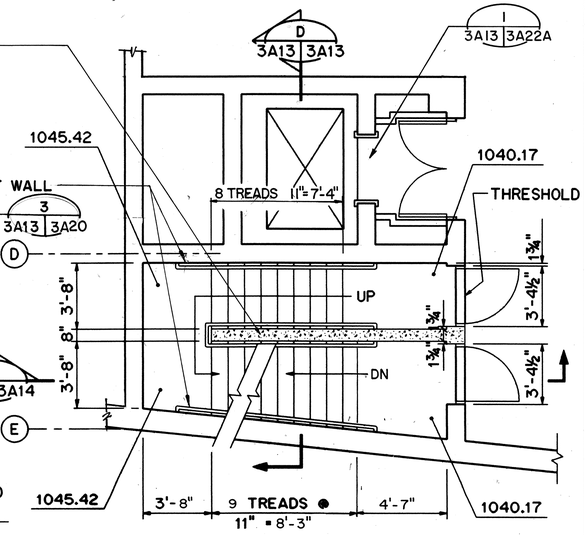

PLAN AT LEVELS 1040.17 AND 1045.42 (3 | 3A4 | 3A13)
SCALE: 1/4" = 1'-0"

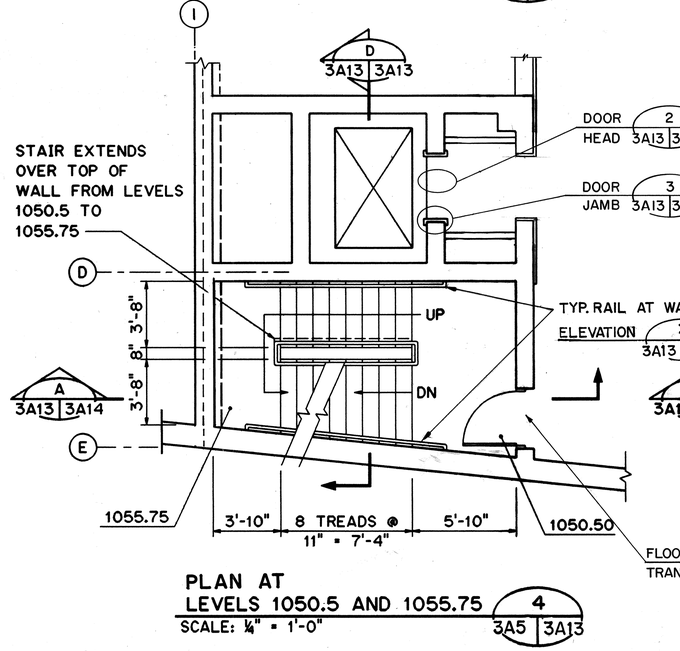

PLAN AT LEVELS 1050.5 AND 1055.75 (4 | 3A5 | 3A13)
SCALE: 1/4" = 1'-0"

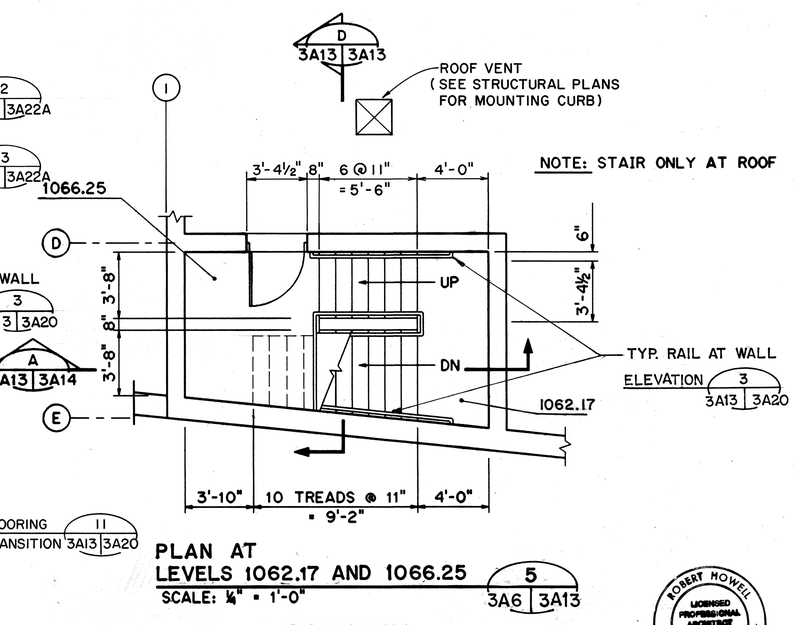

PLAN AT LEVELS 1062.17 AND 1066.25 (5 | 3A6 | 3A13)
SCALE: 1/4" = 1'-0"

GRAPHIC SCALES
8' 4' 0' 8' 16'
1/8" = 1'-0"
4' 2' 0' 4' 8'
1/4" = 1'-0"

ROBERT HOWELL LICENSED PROFESSIONAL ARCHITECT No. 6807 HAWAII, U.S.A.

THIS WORK WAS PREPARED BY ME OR UNDER MY SUPERVISION
Robert Howell

DATE	REVISION
2/11/97	DCN 75-012: INDICATED ELEVATOR LOBBY CEILING, PLAN 1 PER RESPONSE TO RFI # 4097-104
8/28/96	DCN 75-008: REV. STAIRS TO INDICATE CHANGES MADE PER DCN 75-003
10/27/95	ADDENDUM 2 - DELETED ELEVATOR
	DOORS AT EL 1050.5
10/13/95	ADDENDUM 1

STATE OF HAWAII
DEPARTMENT OF TRANSPORTATION
HIGHWAYS DIVISION

STAIR/ELEVATOR PLANS AND SECTIONS

TRAFFIC OPERATIONS CENTER EXPANSION
H-3 FINISH (UNIT III)
FAIP NO. I-H3-1(75), UNIT III
T.K. TUNNEL/ACCESS ROADS

SCALE: 1/8" = 1'-0" DATE: JUN 1995

SHEET NO. 3A13 OF 22 SHEETS

ORIGINAL PLAN			DATE
	SURVEY PLOTTED BY	B. BUNYI	NOV 94
	DRAWN BY	"	"
	TRACED BY	"	"
NOTE BOOK	DESIGNED BY	C. FREY	NOV 94
	CHECKED BY	R. HOWELL	DEC 94
NO.	QUANTITIES BY		

BUNYI ELWOOD::2410:IDWG.ARCHJAR010.FGB71 26JAN95-10:09:40

FED. ROAD DIST. NO.	STATE	FED. AID PROJ. NO.	FISCAL YEAR	SHEET NO.	TOTAL SHEETS
HAWAII	HAW.	I-H3-1(75) UNIT III	1994	149	353

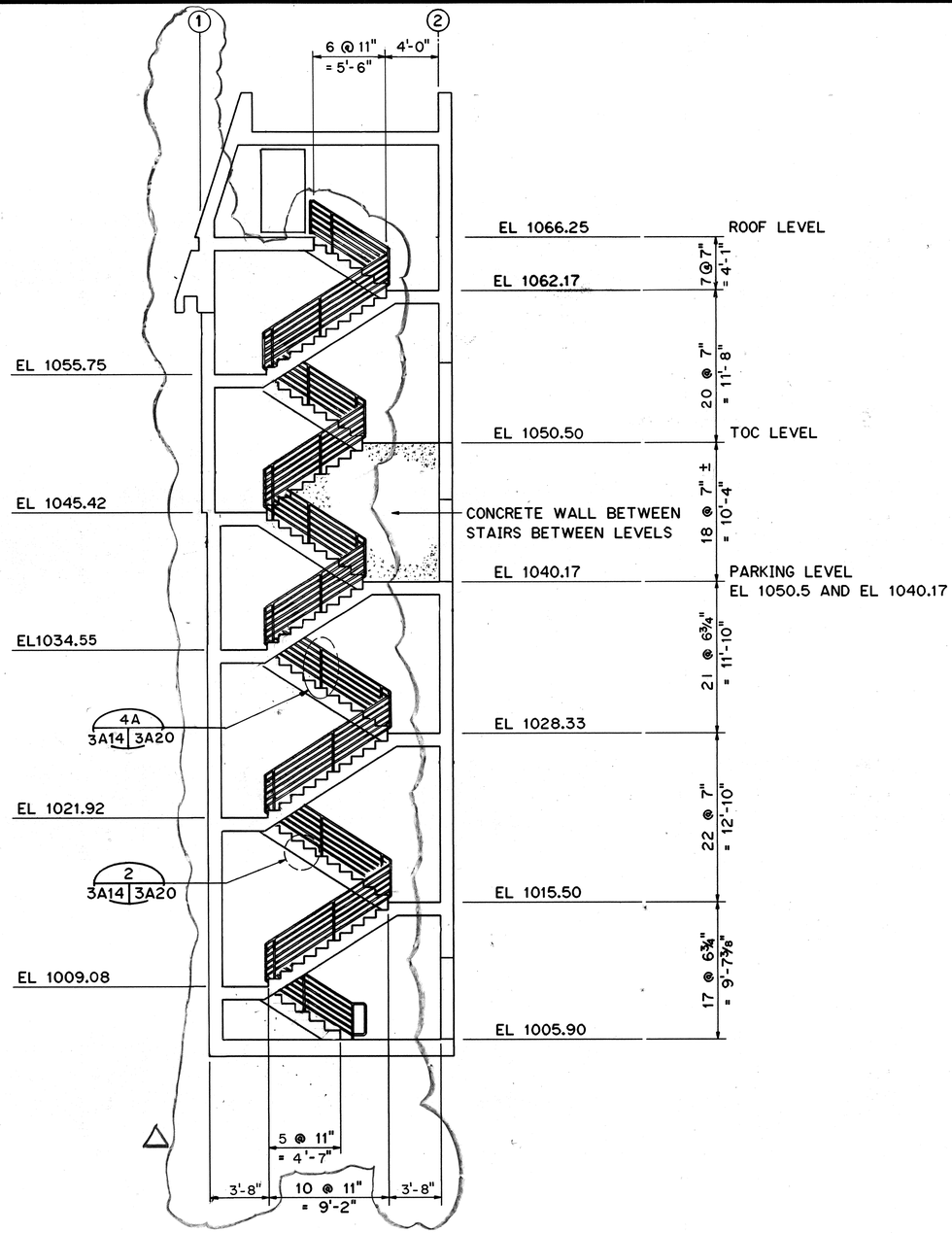

SECTION A
NTS
3A13 3A14

8/28/96	DCN 75-008: REV. STAIRS TO INDICATE CHANGES MADE PER DCN 75-003
10/13/95	ADDENDUM 1
DATE	REVISION

STATE OF HAWAII
DEPARTMENT OF TRANSPORTATION
HIGHWAYS DIVISION

STAIR/ELEVATOR ELEVATIONS & SECTIONS

TRAFFIC OPERATIONS CENTER EXPANSION
H-3 FINISH (UNIT III)
FAIP NO. I-H3-1(75), UNIT III
T.K. TUNNEL/ACCESS ROADS

SCALE: NONE DATE: JUN 1995

SHEET NO. 3A14 OF 22 SHEETS

ROBERT HOWELL LICENSED PROFESSIONAL ARCHITECT No. 6557 HAWAII, U.S.A.

THIS WORK WAS PREPARED BY ME OR UNDER MY SUPERVISION

Robert Howell

ORIGINAL PLAN	SURVEY PLOTTED BY		DATE
	DRAWN BY	B. BUNYI	NOV 94
NOTE BOOK	TRACED BY		NOV 94
	DESIGNED BY	C. FREY	
	QUANTITIES BY		NOV 94
NO.	CHECKED BY	R. HOWELL	DEC 94

BUNYI ELWOOD::2410:[DWG.ARCH]AR021.FGB71 24JAN95-13.18.50

ADD. 149

FED. ROAD DIST. NO.	STATE	FED. AID PROJ. NO.	FISCAL YEAR	SHEET NO.	TOTAL SHEETS
HAWAII	HAW.	I-H3-1(75) UNIT III	1994	150	353

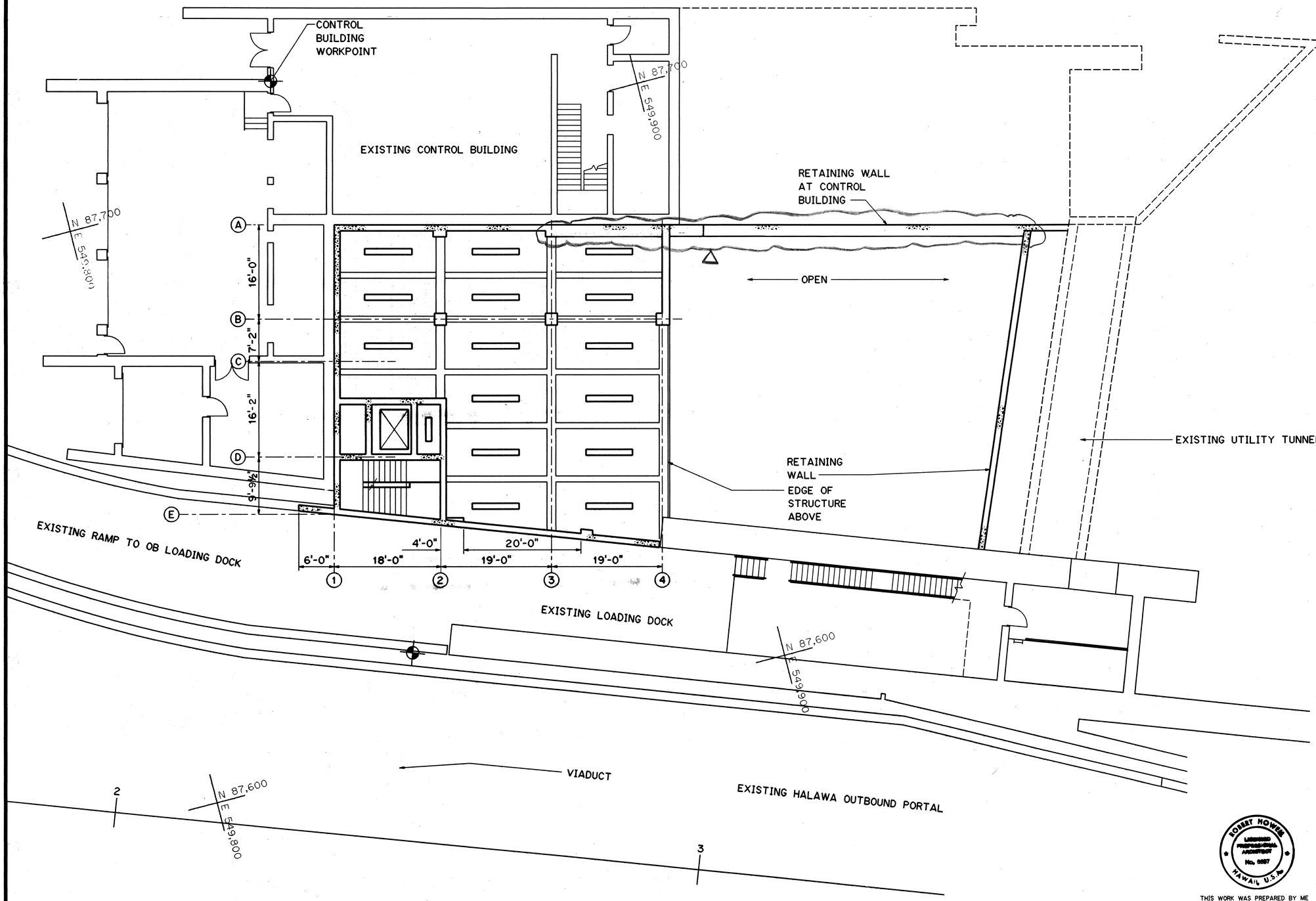

NOTES:

LIGHT FIXTURE

8/28/96	DCN 75-008: REV. RETAINING WALL AND WALL ALONG LINE A BETWEEN COLS 3 AND 4
10/13/95	ADDENDUM 1
DATE	REVISION

STATE OF HAWAII
DEPARTMENT OF TRANSPORTATION
HIGHWAYS DIVISION

REFLECTED CEILING PLAN - PARKING LEVEL

TRAFFIC OPERATIONS CENTER EXPANSION
H-3 FINISH (UNIT III)
FAIP NO. I-H3-1(75), UNIT III
T.K. TUNNEL/ACCESS ROADS

SCALE: NONE DATE: JUN 1995

ROBERT HOWELL LICENSED PROFESSIONAL ARCHITECT No. 6557 HAWAII, U.S.A.

THIS WORK WAS PREPARED BY ME OR UNDER MY SUPERVISION

Robert Howell

ORIGINAL PLAN			DATE
	SURVEY PLOTTED BY	B. BUNYI	NOV 94
	DRAWN BY	"	"
NOTE BOOK	TRACED BY	C. FREY	NOV 94
	DESIGNED BY	"	"
	QUANTITIES BY	R. HOWELL	DEC 94
NO.	CHECKED BY	"	"

SHEET NO. 3A15 OF 22 SHEETS

ADD. 150

BUNYI ELWOOD::2410:[DWG.ARCHJAR022.FGB]I 24JAN95-13.27.10

FED. ROAD DIST. NO.	STATE	FED. AID PROJ. NO.	FISCAL YEAR	SHEET NO.	TOTAL SHEETS
HAWAII	HAW.	I-H3-1(75) UNIT III	1994	151	353

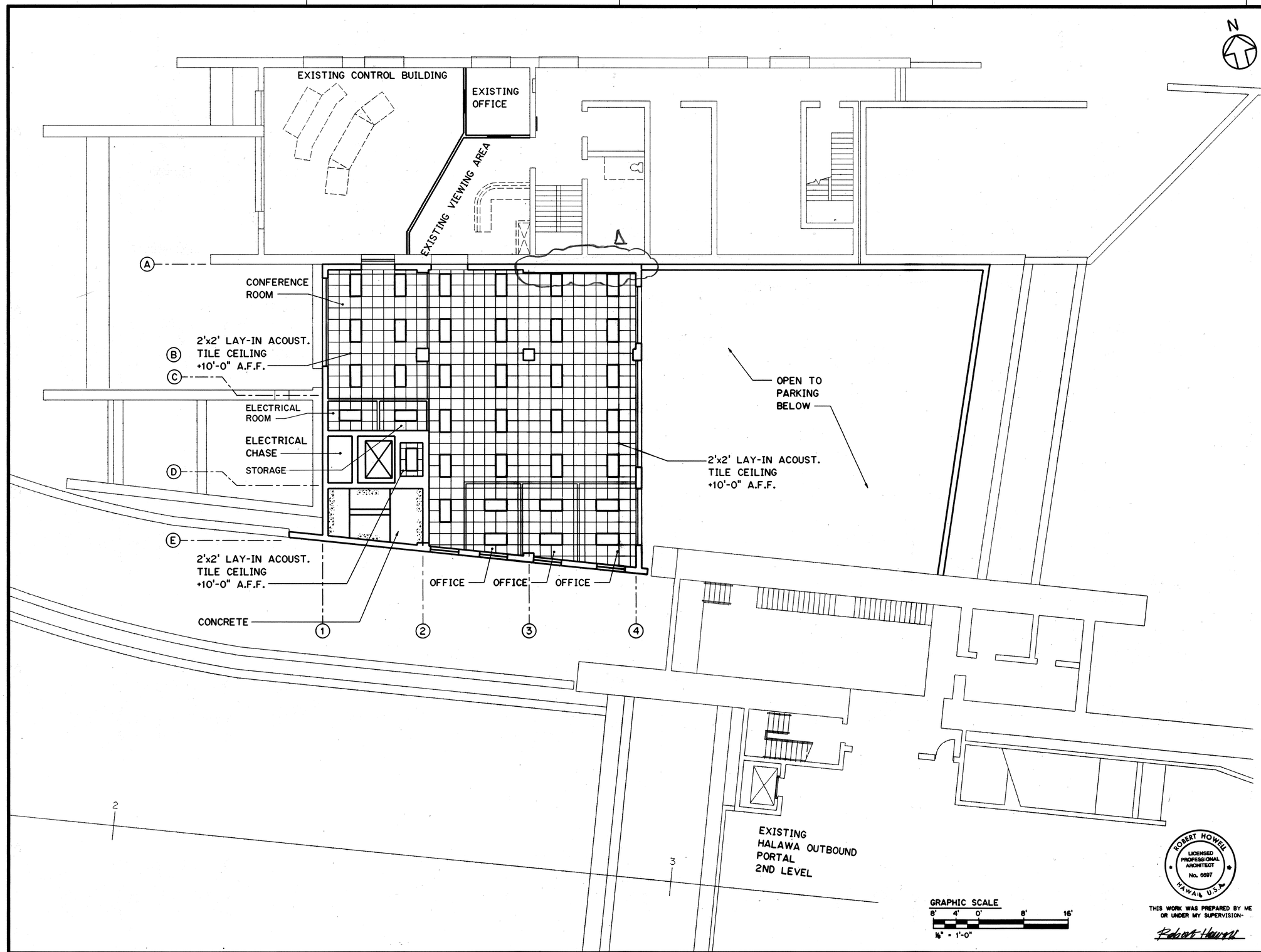

NOTES:

1. FOR LOCATION OF AIR DISTRIBUTION DEVICES SEE SHEET NO. 3M5.
2. SEE DETAIL 6, SHEET NO. 3A22 FOR SUSPENDED ACOUSTIC CEILING INSTALLATION.

LIGHT FIXTURE

GRAPHIC SCALE
8' 4' 0' 8' 16'
1/8" = 1'-0"

ROBERT HOWELL LICENSED PROFESSIONAL ARCHITECT No. 6697 HAWAII U.S.A.

THIS WORK WAS PREPARED BY ME OR UNDER MY SUPERVISION-
Robert Howell

DATE	REVISION
8/28/96	DCN75-008: REV. WALL ALONG LINE A BETWEEN COLS 3 AND 4
10/13/95	ADDENDUM 1

STATE OF HAWAII
DEPARTMENT OF TRANSPORTATION
HIGHWAYS DIVISION

REFLECTED CEILING PLAN - SECOND LEVEL

TRAFFIC OPERATIONS CENTER EXPANSION
H-3 FINISH (UNIT III)
FAIP NO. I-H3-1(75), UNIT III
T.K. TUNNEL/ACCESS ROADS

SCALE: 1/8" = 1'-0" DATE: JUN 1995

SHEET NO. 3A16 OF 22 SHEETS

ORIGINAL PLAN	SURVEY PLOTTED BY B. BUNYI	DATE NOV 94
	DRAWN BY "	" NOV 94
NOTE BOOK	TRACED BY "	" NOV 94
	DESIGNED BY C. FREY	" NOV 94
NO.	QUANTITIES BY "	" DEC 94
	CHECKED BY R. HOWELL	

BUNYI ELWOOD::24TO:[DWG.ARCHJAR013.FGB71 24JAN95-13.54.00

ADD. 151

FED. ROAD DIST. NO.	STATE	FED. AID PROJ. NO.	FISCAL YEAR	SHEET NO.	TOTAL SHEETS
HAWAII	HAW.	I-H3-1(75) UNIT III	1994	152	353

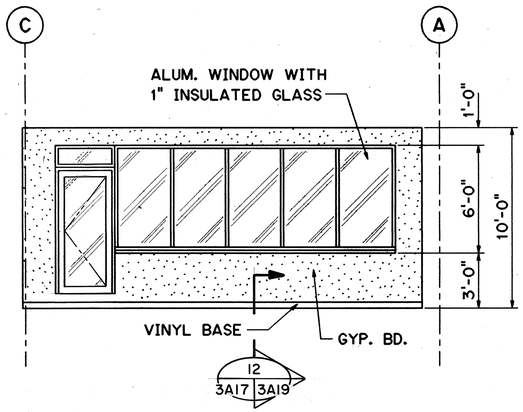

ELEVATION 1
SCALE: ¼" = 1'-0" 3A5 3A17

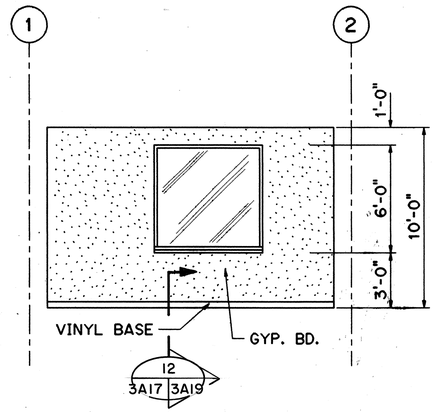

ELEVATION 2
SCALE: ¼" = 1'-0" 3A5 3A17

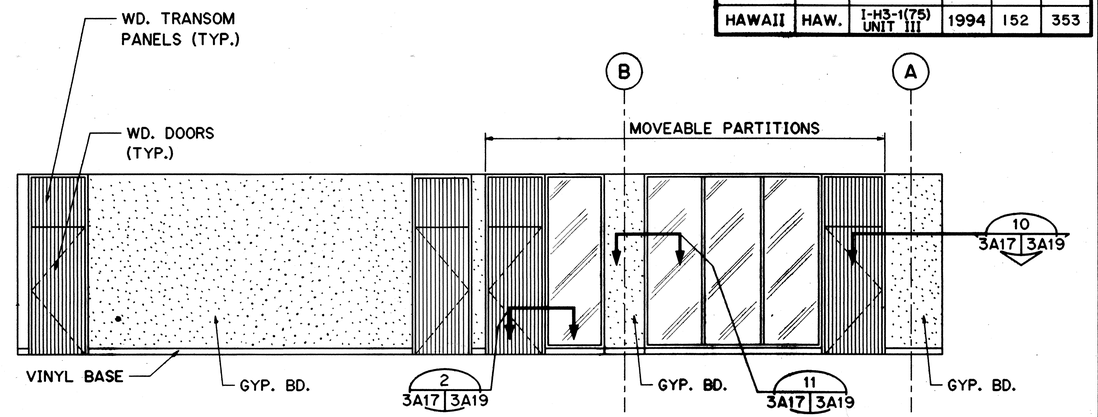

ELEVATION 3
SCALE: ¼" = 1'-0" 3A5 3A17

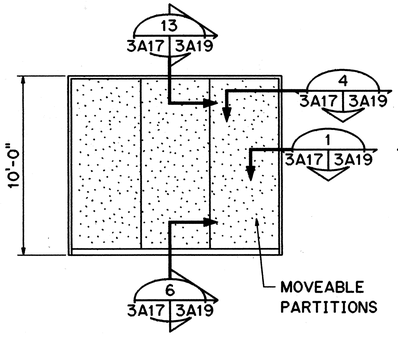

ELEVATION 4
SCALE: ¼" = 1'-0" 3A5 3A17

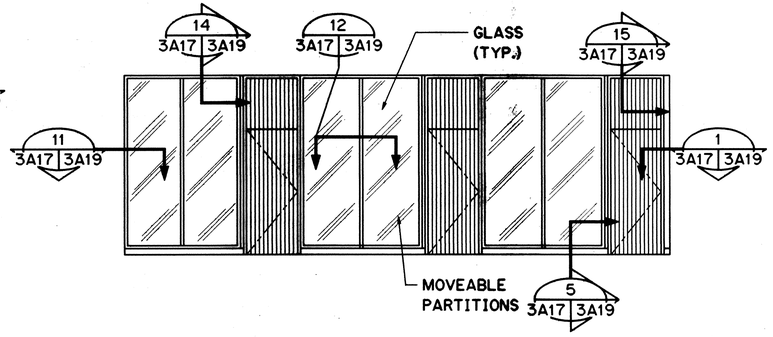

ELEVATION 5
SCALE: ¼" = 1'-0" 3A5 3A17

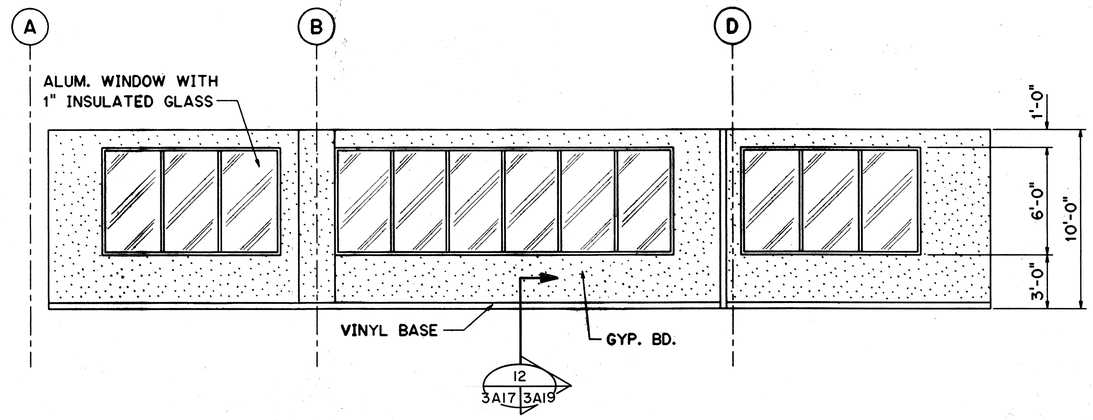

ELEVATION 6
SCALE: ¼" = 1'-0" 3A5 3A17

6/12/96	DCN 75-005: REVISED DOOR IN ELEVATION "1" PER RESPONSE TO RFI NO. 51.
10/13/95	ADDENDUM 1
DATE	REVISION

ROBERT HOWELL LICENSED PROFESSIONAL ARCHITECT No. 6007 HAWAII U.S.A.

THIS WORK WAS PREPARED BY ME OR UNDER MY SUPERVISION

Robert Howell

STATE OF HAWAII
DEPARTMENT OF TRANSPORTATION
HIGHWAYS DIVISION

INTERIOR ELEVATIONS

TRAFFIC OPERATIONS CENTER EXPANSION
H-3 FINISH (UNIT III)
FAIP NO. I-H3-1(75), UNIT III
T.K. TUNNEL/ACCESS ROADS

SCALE: ¼" = 1'-0" DATE: JUN 1995

SHEET NO. 3A17 OF 22 SHEETS

ADD. 152

ORIGINAL PLAN			DATE
	SURVEY PLOTTED BY		
	DRAWN BY	B. BURYI	NOV 94
NOTE BOOK	TRACED BY		
	DESIGNED BY	C. FREY	NOV 94
	QUANTITIES BY		
NO.	CHECKED BY	R. HOWELL	DEC 94

HERNANDEZ ELWOOD::2410:IDWG.ARCHJAR023.PGBJ1 01FEB95-14.21.10

FED. ROAD DIST. NO.	STATE	FED. AID PROJ. NO.	FISCAL YEAR	SHEET NO.	TOTAL SHEETS
HAWAII	HAW.	I-H3-1(75) UNIT III	1994	153	353

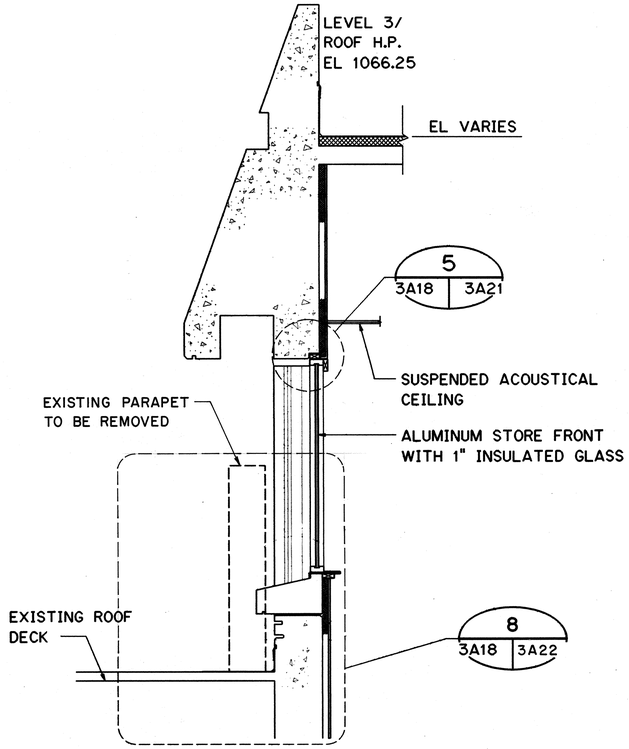

SECTION A
SCALE: ½" = 1'-0"
3A5 3A18
3A6

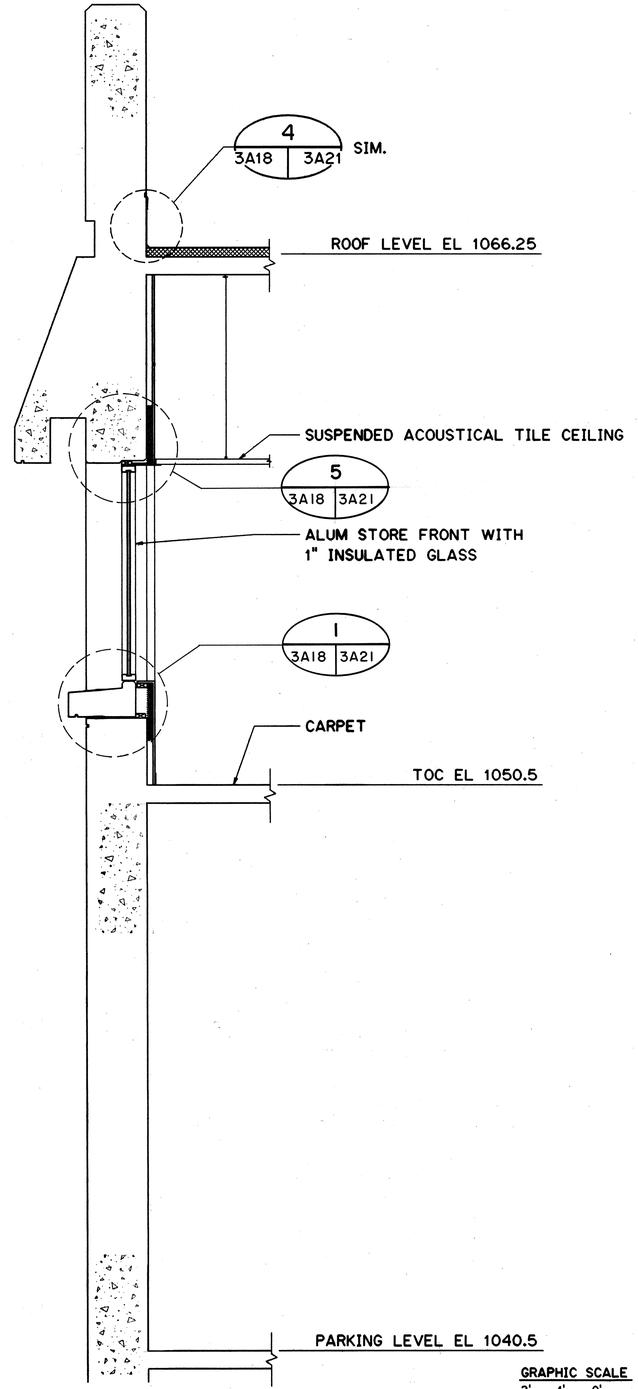

SECTION B
SCALE: ½" = 1'-0"
3A4, 3A5 3A18
3A6

GRAPHIC SCALE
2' 1' 0' 2' 4'
½" = 1'-0"

ROBERT HOWELL
LICENSED PROFESSIONAL ARCHITECT
No. 6607
HAWAII, U.S.A.

THIS WORK WAS PREPARED BY ME OR UNDER MY SUPERVISION

10/13/95	ADDENDUM 1
DATE	REVISION

STATE OF HAWAII
DEPARTMENT OF TRANSPORTATION
HIGHWAYS DIVISION

DETAILS - 1

TRAFFIC OPERATIONS CENTER EXPANSION
H-3 FINISH (UNIT III)
FAIP NO. I-H3-1(75), UNIT III
T.K. TUNNEL/ACCESS ROADS

SCALE: AS NOTED DATE: JUN 1995

SHEET NO. 3A18 OF 22 SHEETS

ORIGINAL PLAN		DATE
	SURVEY PLOTTED BY	
	DRAWN BY B. BUNYI	NOV 94
NOTE BOOK	TRACED BY	
	DESIGNED BY C. FREY	NOV 94
NO.	QUANTITIES BY	
	CHECKED BY R. HOWELL	DEC 94

BUNYI ELWOOD::2410:[DWG.ARCHJAR019.FGB71 25JAN95-08.34.30

FED. ROAD DIST. NO.	STATE	FED. AID PROJ. NO.	FISCAL YEAR	SHEET NO.	TOTAL SHEETS
HAWAII	HAW.	I-H3-1(75) UNIT III	1994	154	353

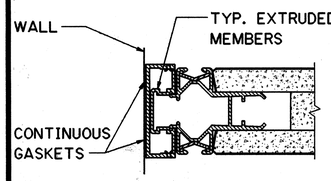

JAMB - TYP. PANEL AT WALL

DETAIL 1 — SCALE: 6" = 1'-0" — 3A17 | 3A19

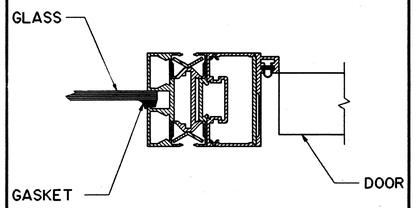

TYP. DOOR JAMB AT GLASS

DETAIL 2 — SCALE: 6" = 1'-0" — 3A17 | 3A19

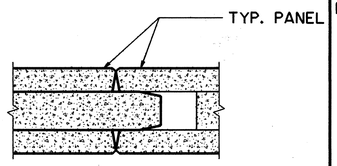

JAMB - TYPICAL PANEL

DETAIL 3 — SCALE: 6" = 1'-0" — - | -

NOT USED

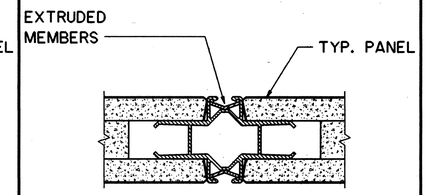

JAMB - TYPICAL PANEL

DETAIL 4 — SCALE: 6" = 1'-0" — 3A17 | 3A19

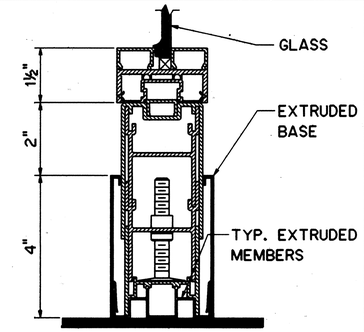

SILL AT GLASS PANEL

DETAIL 5 — SCALE: 6" = 1'-0" — 3A17 | 3A19

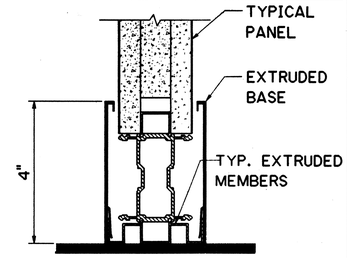

SILL - TYPICAL PANEL

DETAIL 6 — SCALE: 6" = 1'-0" — 3A17 | 3A19

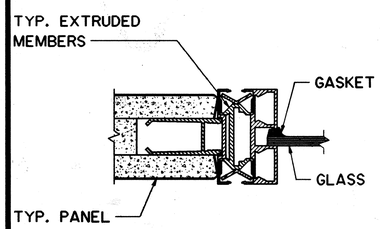

JAMB - TYP. PANEL AT GLASS

DETAIL 7 — SCALE: 6" = 1'-0" — - | -

NOT USED

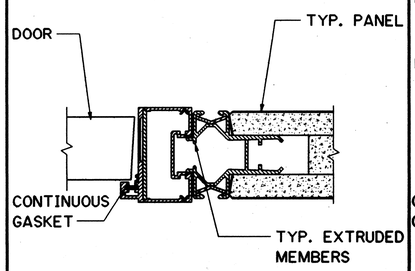

TYP. DOOR AT PARTITION

DETAIL 8 — SCALE: 6" = 1'-0" — - | -

NOT USED

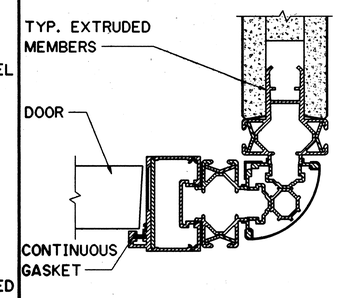

TYPICAL PARTITION CORNER

DETAIL 9 — SCALE: 6" = 1'-0" — - | -

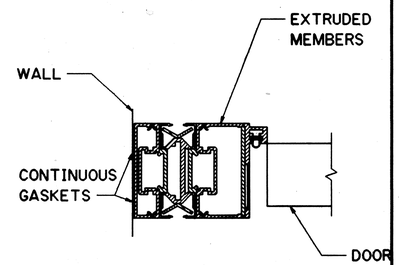

TYP. DOOR JAMB AT WALL

DETAIL 10 — SCALE: 6" = 1'-0" — 3A17 | 3A19

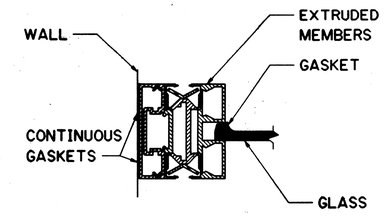

TYPICAL GLASS AT WALL

DETAIL 11 — SCALE: 6" = 1'-0" — 3A17 | 3A19

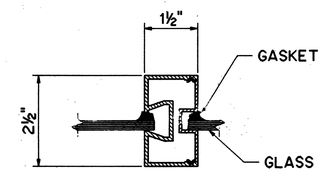

TYPICAL MULLION

DETAIL 12 — SCALE: 6" = 1'-0" — 3A17 | 3A19

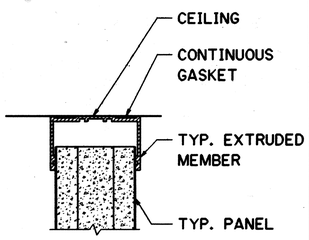

HEAD - TYPICAL PANEL

DETAIL 13 — SCALE: 6" = 1'-0" — 3A17 | 3A19

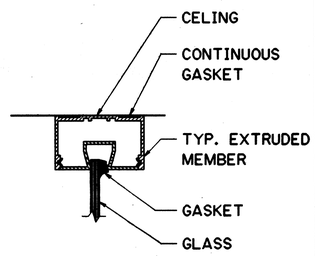

HEAD AT GLASS PANEL

DETAIL 14 — SCALE: 6" = 1'-0" — 3A17 | 3A19

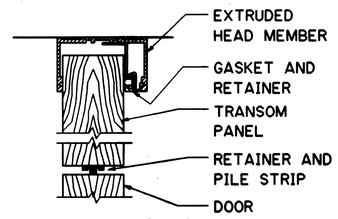

TYPICAL DOOR HEAD

DETAIL 15 — SCALE: 6" = 1'-0" — 3A17 | 3A19

NOTES:

1. ANCHOR PANEL MEMBERS TO CONCRETE WALLS AND COLUMNS WITH EXPANSION ANCHORS (316 SS) IN ACCORDANCE WITH MANUFACTURER'S RECOMMENDATIONS.
2. FASTEN SUSPENDED CEILING GRID TO CONCRETE WALLS AND PANEL HEAD MEMBERS IN ACCORDANCE WITH MANUFACTURER'S RECOMMENDATIONS.

GRAPHIC SCALE

0" 2" 4" 6" 8" 10" 1'

6" = 1'-0"

ROBERT HOWELL — LICENSED PROFESSIONAL ARCHITECT No. 6607 — HAWAII, U.S.A.

THIS WORK WAS PREPARED BY ME OR UNDER MY SUPERVISION

Robert Howell

DATE	REVISION
10/13/95	ADDENDUM 1

STATE OF HAWAII
DEPARTMENT OF TRANSPORTATION
HIGHWAYS DIVISION

DETAILS - 2

TRAFFIC OPERATIONS CENTER EXPANSION
H-3 FINISH (UNIT III)
FAIP NO. I-H3-1(75), UNIT III
T.K. TUNNEL/ACCESS ROADS

SCALE: 6" = 1'-0" DATE: JUN 1995

SHEET NO. 3A19 OF 22 SHEETS

ADD. 154

ORIGINAL PLAN			DATE
	SURVEY PLOTTED BY	B. BUNYI	NOV 94
	DRAWN BY	"	"
	TRACED BY	C. FREY	NOV 94
	TECHNICAL REVIEWED BY	"	"
NOTE BOOK	QUANTITIES BY	"	DEC 94
NO.	CHECKED BY	R. HOWELL	

BUNYI ELWOOD::2410:IDWG.ARCHJAROI5.FGB71 25JAN95-08:37:50

FED. ROAD DIST. NO.	STATE	FED. AID PROJ. NO.	FISCAL YEAR	SHEET NO.	TOTAL SHEETS
HAWAII	HAW.	I-H3-1(75) UNIT III	1994	155	353

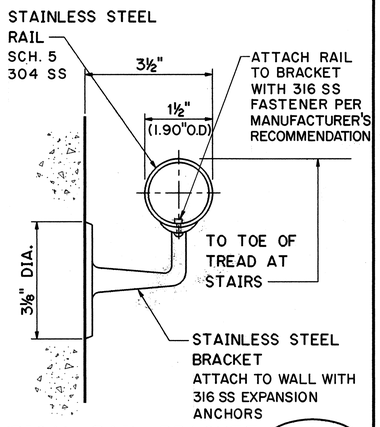

TYPICAL RAIL BRACKET (1 / 3A20 | 3A20)
SCALE: 6" = 1'-0"

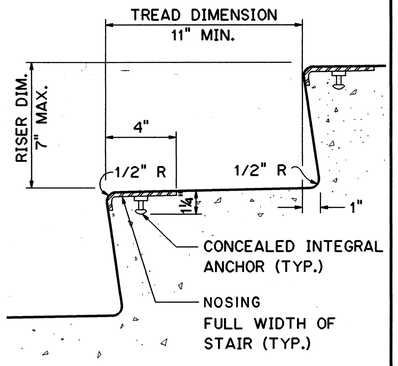

TYPICAL CONCRETE STAIR

SECTION (2 / 3A14 | 3A20)
SCALE: 3" = 1'-0"

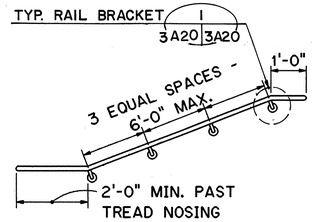

TYPICAL RAIL AT WALL

ELEVATION (3 / 3A13 | 3A20)
SCALE: ½" = 1'-0"

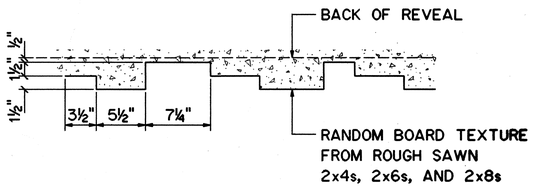

PLAN AT RANDOM BOARD TEXTURE (4 / 3A9 | 3A20)
SCALE: 1½" = 1'-0"

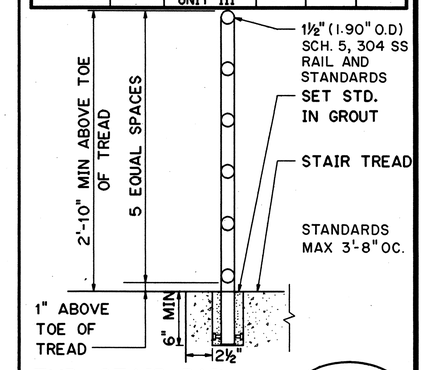

TYP. STAIR RAIL (4A / 3A14 | 3A20)
SCALE: 1½" = 1'-0"

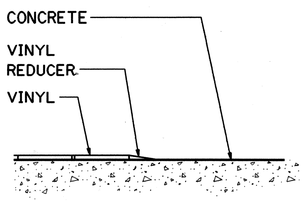

FLOORING TRANSITION

DETAIL (5 / - | -)
N.T.S.

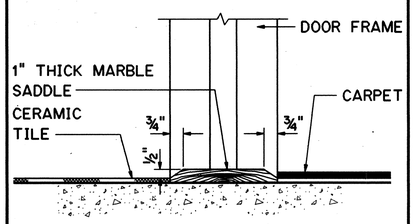

FLOORING TRANSITION

DETAIL (6 / - | -)
N.T.S.

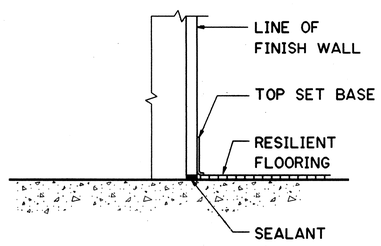

BASE DETAIL (7 / - | -)
N.T.S.

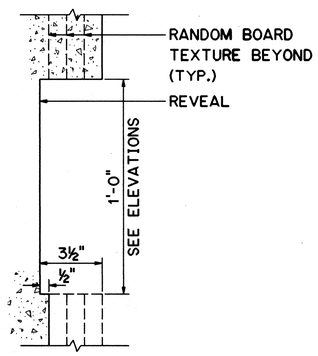

TYPICAL REVEAL

SECTION (8 / 3A8 | 3A20)
SCALE: 3" = 1'-0"

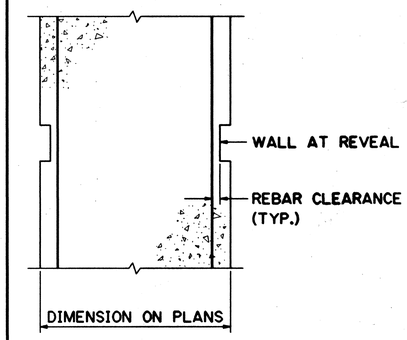

TYPICAL WALL

SECTION (9 / - | -)
SCALE: ½" = 1'-0"

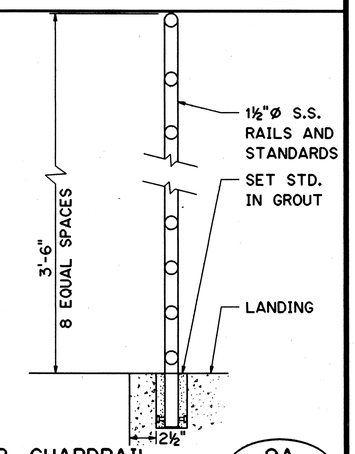

TYP. GUARDRAIL (9A / - | -)
SCALE: 1½" = 1'-0"

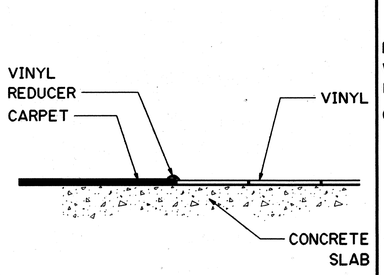

FLOORING TRANSITION

DETAIL (10 / - | -)
N.T.S.

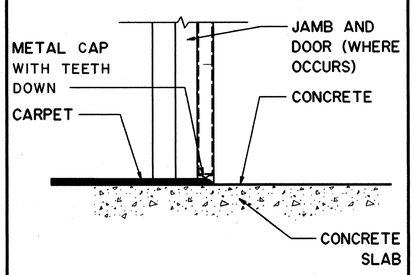

FLOORING TRANSITION

DETAIL (11 / - | -)
N.T.S.

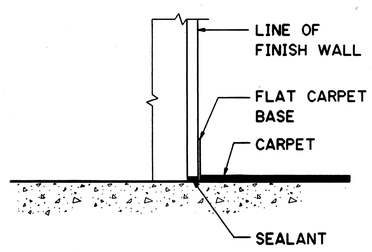

BASE DETAIL (12 / - | -)
N.T.S.

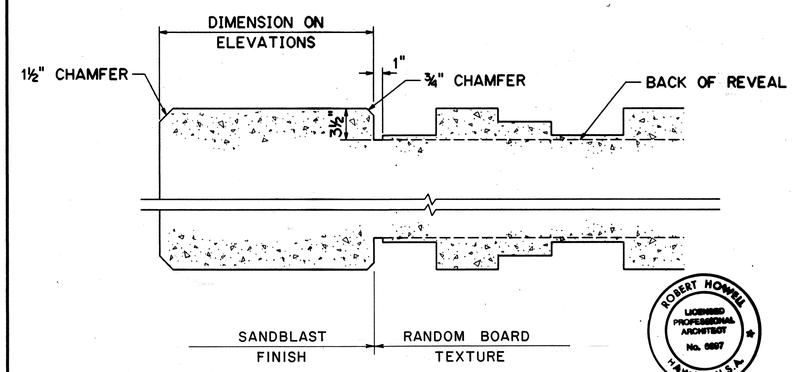

PLAN DETAIL-EXT. WALL (HEAD SIM.) (13 / 3A4, 3A5, 3A6 | 3A20)
SCALE: 1½" = 1'-0"

ROBERT HOWELL LICENSED PROFESSIONAL ARCHITECT No. 6897 HAWAII, U.S.A.

THIS WORK WAS PREPARED BY ME OR UNDER MY SUPERVISION

Robert Howell

NOTES:
SOME OF THE STANDARD DETAILS ON THIS SHEET MAY REPRESENT WORK WHICH IS NOT PRESENTLY PART OF THIS CONTRACT.

DATE	REVISION
10/13/95	ADDENDUM 1

STATE OF HAWAII
DEPARTMENT OF TRANSPORTATION
HIGHWAYS DIVISION

DETAILS - 3

TRAFFIC OPERATIONS CENTER EXPANSION
H-3 FINISH (UNIT III)
FAIP NO. I-H3-1(75), UNIT III
T.K. TUNNEL/ACCESS ROADS

SCALE: AS NOTED DATE: JUN 1995

SHEET NO. 3A20 OF 22 SHEETS

ORIGINAL PLAN		DATE
	SURVEY PLOTTED BY	
	DRAWN BY	B. BUNYI
NOTE BOOK	TRACED BY	NOV 94
	DESIGNED BY	C. FREY NOV 94
	QUANTITIES BY	
NO.	CHECKED BY	R. HOWELL DEC 94

BUNYI ELWOOD::2410:[DWG.ARCH]AR014.FGB71 31JAN95-16.18.20

ADD. 155

FED. ROAD DIST. NO.	STATE	FED. AID PROJ. NO.	FISCAL YEAR	SHEET NO.	TOTAL SHEETS
HAWAII	HAW.	I-H3-1(75) UNIT III	1994	156	353

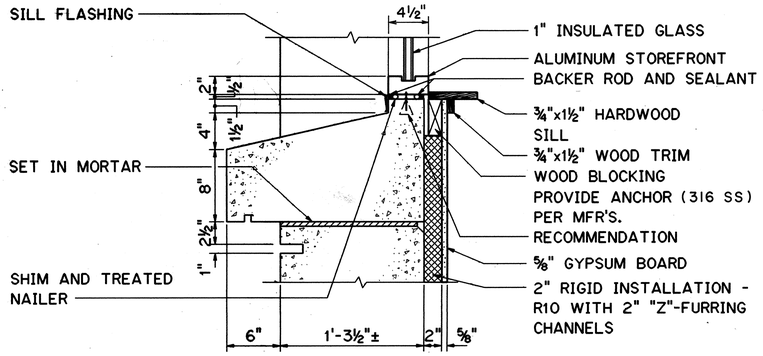

DETAIL - WINDOW SILL (1 / 3A18 | 3A21)
SCALE: 1½" = 1'-0"

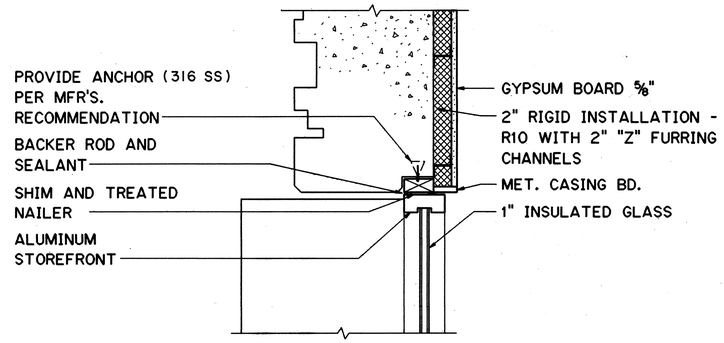

DETAIL - WINDOW JAMB (2 / 3A5 | 3A21)
SCALE: 6" = 1'-0"

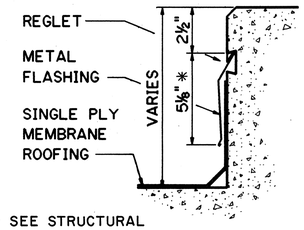

* SEE STRUCTURAL PLANS FOR ROOF CURB AND PARAPET HEIGHTS

SECTION AT ROOF CURB AND PARAPET

SECTION (3 / - | -)
SCALE: 3" = 1'-0"

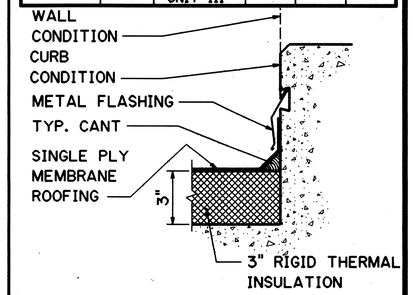

SECTION (4 / 3A18 | 3A21)
SCALE: 3" = 1'-0"

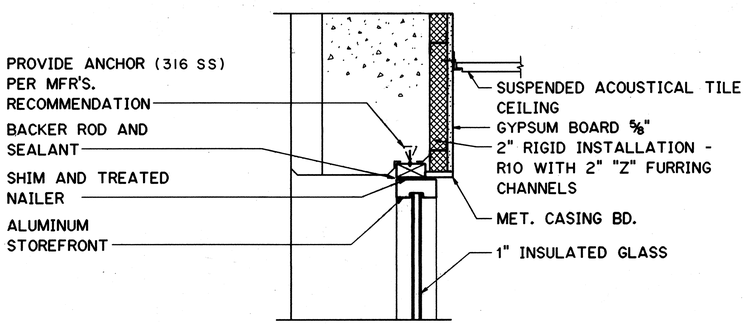

DETAIL - WINDOW JAMB (5 / 3A18 | 3A21)
SCALE: 6" = 1'-0"

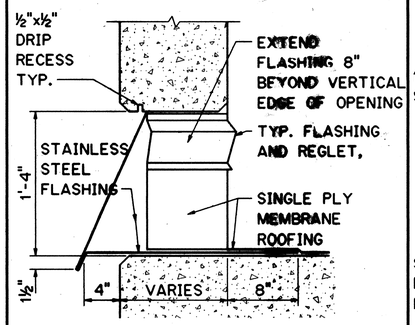

TYPICAL SCUPPER

DETAIL (6 / - | -)
SCALE: 6" = 1'-0"

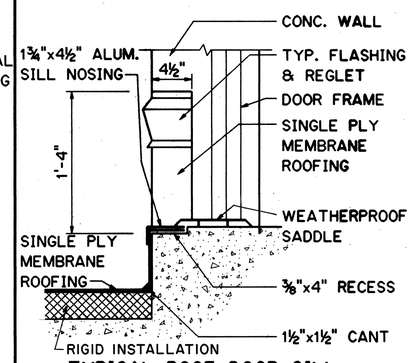

TYPICAL ROOF DOOR SILL

DETAIL (7 / - | -)
SCALE: 6" = 1'-0"

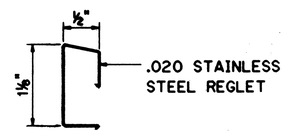

TYPICAL REGLET PROFILE

DETAIL (8 / - | -)
SCALE: FULL SIZE

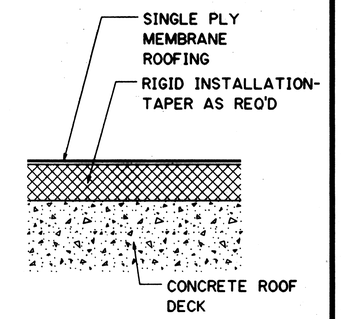

TYPICAL ROOFING

SECTION (9 / - | -)
SCALE: HALF SIZE

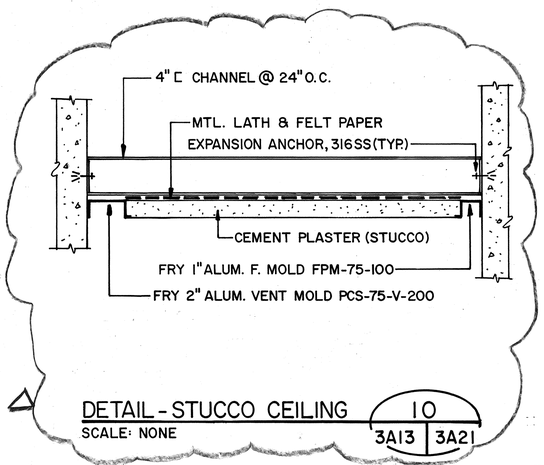

DETAIL - STUCCO CEILING (10 / 3A13 | 3A21)
SCALE: NONE

NOT USED

SECTION (11 / — | —)

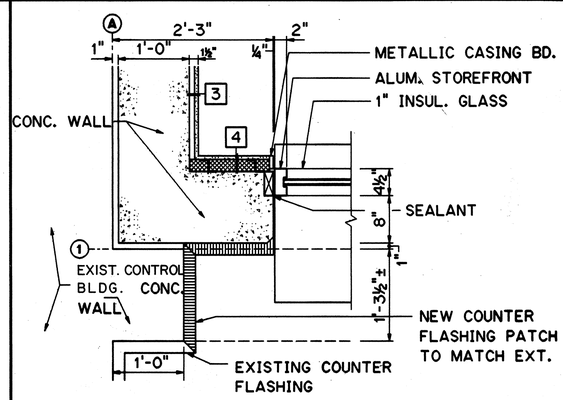

DETAIL (12 / - | -)
SCALE: 1" = 1'-0"

ROBERT HOWELL LICENSED PROFESSIONAL ARCHITECT No. 5697 HAWAII, U.S.A.

THIS WORK WAS PREPARED BY ME OR UNDER MY SUPERVISION

Robert Howell

NOTES:
SOME OF THE STANDARD DETAILS ON THIS SHEET MAY REPRESENT WORK WHICH IS NOT PRESENTLY PART OF THIS CONTRACT.

DATE	REVISION
2/11/97	DCN 75-012: ADDED DETAIL 10 PER RESPONSE TO RFI # 4097-104
10/13/95	ADDENDUM 1

STATE OF HAWAII
DEPARTMENT OF TRANSPORTATION
HIGHWAYS DIVISION

DETAILS - 4

TRAFFIC OPERATIONS CENTER EXPANSION
H-3 FINISH (UNIT III)
FAIP NO. I-H3-1(75), UNIT III
T.K. TUNNEL/ACCESS ROADS

SCALE: AS NOTED DATE: JUN 1995

SHEET NO. 3A21 OF 22 SHEETS

ORIGINAL PLAN		DATE
	SURVEY PLOTTED BY	
	DRAWN BY	B. BURYI NOV 94
	TRACED BY	
	DESIGNED BY	C. FREY NOV 94
NOTE BOOK	QUANTITIES BY	
NO.	CHECKED BY	R. HOWELL DEC 94

HERNANDEZ ELWOOD::2410:1DWG.ARCH3A01T.PGB71 01FEB95-15:03:10

ADD. 156

FED. ROAD DIST. NO.	STATE	FED. AID PROJ. NO.	FISCAL YEAR	SHEET NO.	TOTAL SHEETS
HAWAII	HAW.	I-H3-1(75) UNIT III	1994	157	353

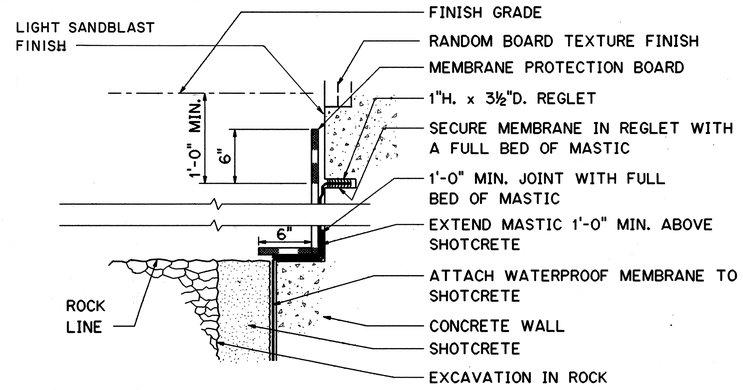

SECTION - WATERPROOF MEMBRANE AT WALL (1 / - | -)
SCALE: 1½" = 1'-0"

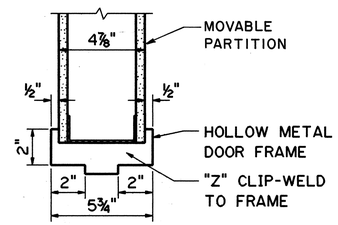

TYPICAL INTERIOR DOOR JAMB DETAIL

SECTION (2 / 3A5 | 3A22)
SCALE: ½" = 1'-0"

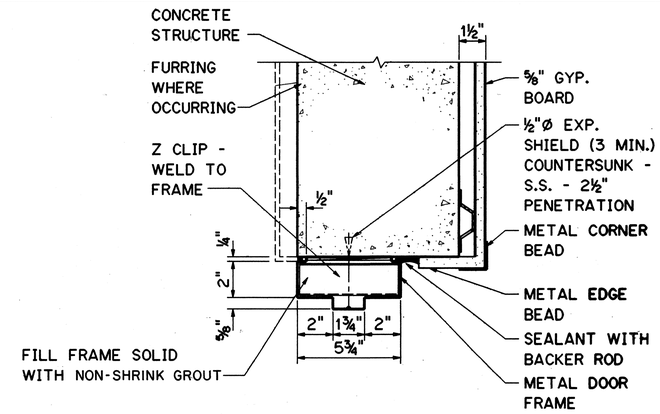

DETAIL - TYPICAL DOOR JAMB AT INTERIOR CONCRETE PARTITION (3 / 3A5 | 3A22)
SCALE: 3" = 1'-0"

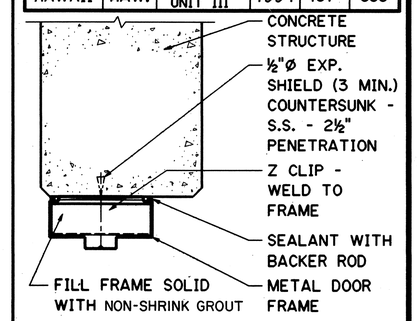

JAMB AT CONCRETE (TYPICAL)

DETAIL (4 / 3A4 | 3A22)
SCALE: 3" = 1'-0"

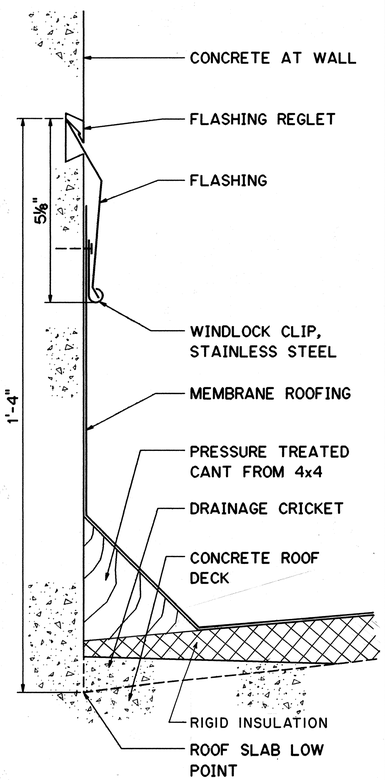

TYP. ROOF AND FLASHING

SECTION (5 / - | -)
SCALE: 1½" = 1'-0"

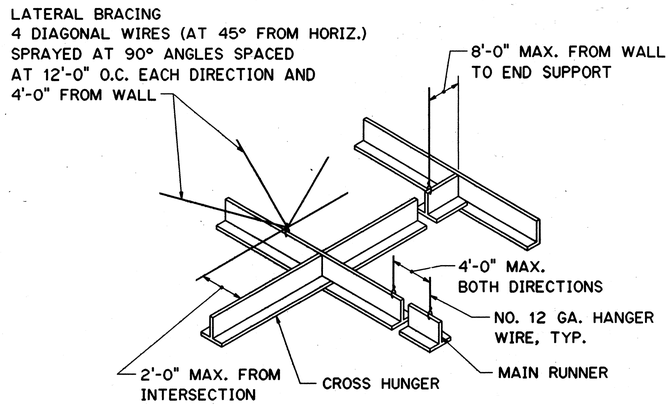

SUSPENDED ACOUSTICAL CEILING (6 / 3A16 | 3A22)
N.T.S.

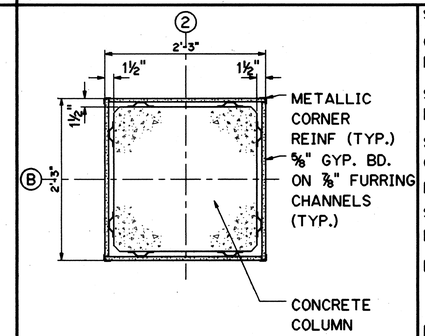

COLUMN FURRING

DETAIL (7 / 3A5 | 3A22)
SCALE: 1½" = 1'-0"

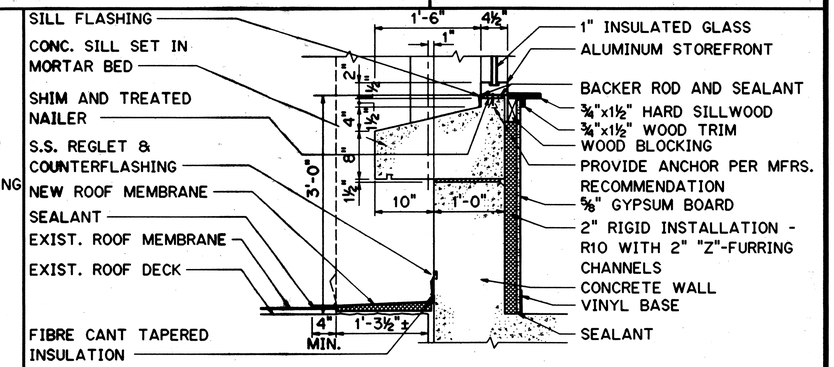

NOTE: REMOVE EXISTING CONCRETE PARAPET TO EXISTING ROOF DECK. REMOVE PORTION OF EXISTING ROOFING MEMBRANE AND FLASHING. INSTALL NEW WORK AS INDICATED.

DETAIL - WINDOW SILL (8 / 3A7 | 3A22)
SCALE: 1" = 1'-0"

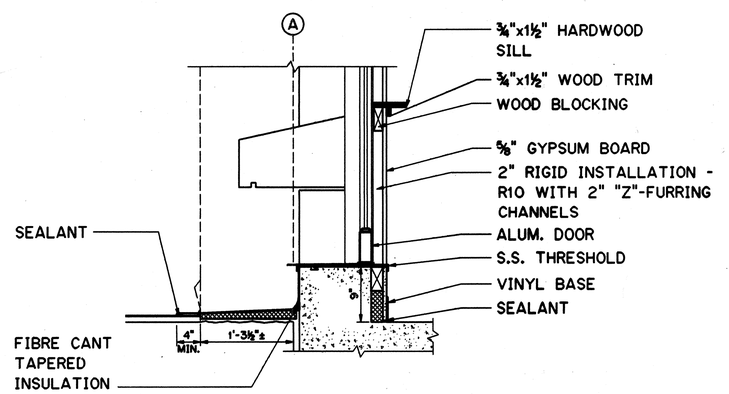

DETAIL (9 / 3A5 | 3A22)
SCALE: 1" = 1'-0"

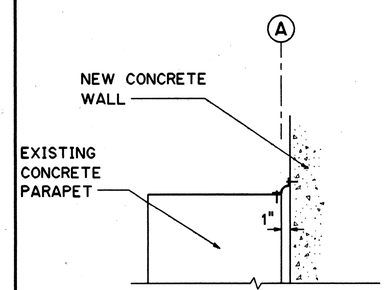

DETAIL (10 / 3A5,3A6 | 3A22)
SCALE: 1½" = 1'-0"

NOTE:
SOME OF THE STANDARD DETAILS ON THIS SHEET MAY REPRESENT WORK WHICH IS NOT PRESENTLY PART OF THIS CONTRACT.

ROBERT HOWELL LICENSED PROFESSIONAL ARCHITECT No. 6697 HAWAII, U.S.A.

THIS WORK WAS PREPARED BY ME OR UNDER MY SUPERVISION

Robert Howell

DATE	REVISION
10/13/95	ADDENDUM 1

STATE OF HAWAII
DEPARTMENT OF TRANSPORTATION
HIGHWAYS DIVISION

DETAILS - 5

TRAFFIC OPERATIONS CENTER EXPANSION
H-3 FINISH (UNIT III)
FAIP NO. I-H3-1(75), UNIT III
T.K. TUNNEL/ACCESS ROADS

SCALE: AS NOTED DATE: JUN 1995

SHEET NO. 3A22 OF 22 SHEETS

ORIGINAL PLAN		DATE
	SURVEY PLOTTED BY	
	DRAWN BY B. BUNYI	NOV 94
NOTE BOOK	TRACED BY	
	DESIGNED BY C. FREY	NOV 94
NO.	QUANTITIES BY	
	CHECKED BY R. HOWELL	DEC 94

BUNYI ELWOOD::2410:DWG.ARCHJAR018.FGB71 25JAN95-08.47.10

ADD. 157

FED. ROAD DIST. NO.	STATE	FED. AID PROJ. NO.	FISCAL YEAR	SHEET NO.	TOTAL SHEETS
HAWAII	HAW.	I-H3-1(75), UNIT III	1994	157 S-1	353

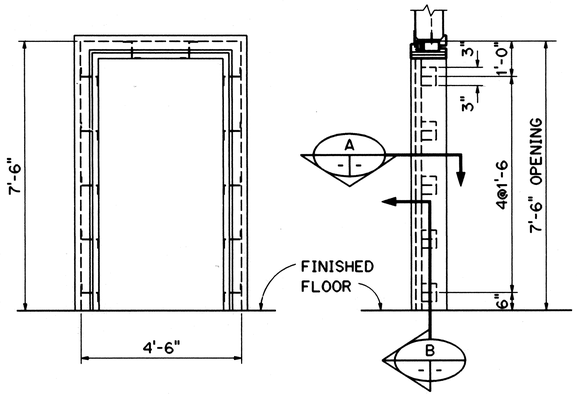

DOOR JAMB ELEVATIONS
Z-BRACKET SPACING (1)
NTS — 2S6, 2S7, 2S8, 2S9, 2S10. 3A13 | 3A22A

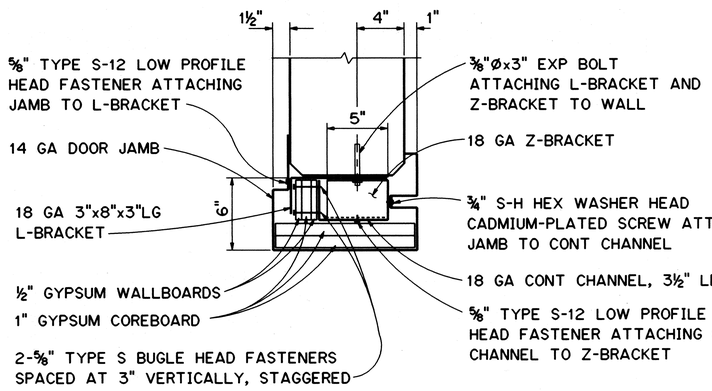

ELEVATOR HEAT AT CONCRETE
SECTION (A)
NTS

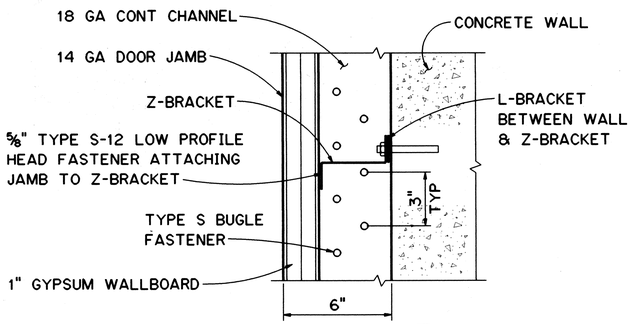

SECTION (B)
NTS

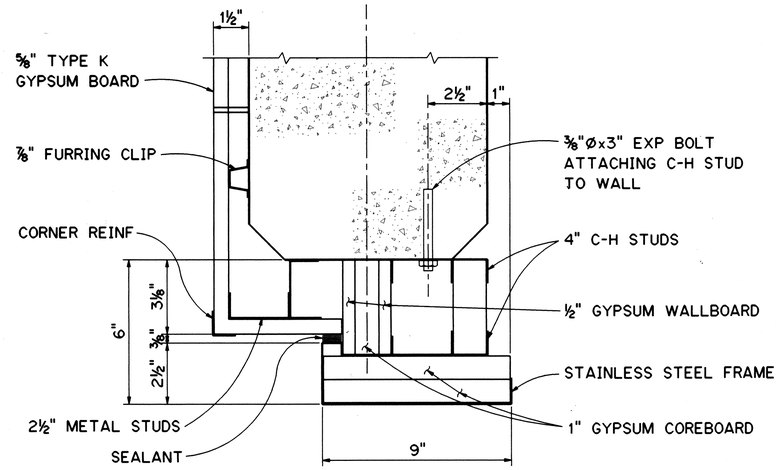

TOC ELEVATOR
DOOR HEAD (2)
NTS — 3A13 | 3A22A

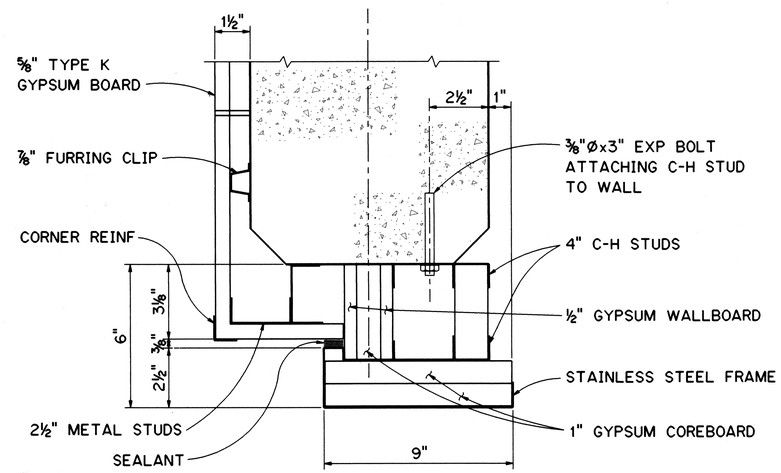

TOC ELEVATOR
DOOR JAMB (3)
NTS — 3A13 | 3A22A

10/27/95	ADDENDUM 2-ADDED PLAN
DATE	REVISION

STATE OF HAWAII
DEPARTMENT OF TRANSPORTATION
HIGHWAYS DIVISION

DETAILS - 6

TRAFFIC OPERATIONS CENTER EXPANSION
H-3 FINISH (UNIT III)
FAIP NO. I-H3-I(75), UNIT III
T.K. TUNNEL/ACCESS ROADS

SCALE: NONE — DATE: OCT 1995

ROBERT HOWELL — LICENSED PROFESSIONAL ARCHITECT No. 6957 — HAWAII, U.S.A.

THIS WORK WAS PREPARED BY ME OR UNDER MY SUPERVISION
Robert Howell

SHEET NO. 3A22A OF 22 SHEETS

ORIGINAL PLAN — NOTE BOOK — NO.
SURVEY PLOTTED BY — DRAWN BY — TRACED BY — DESIGNED BY — QUANTITIES BY — CHECKED BY — DATE

HERNANDEZ ELWOOD:11:2410:1DWG.ARCHJAR034.FGB71 EDITED 24OCT95-10.14.30

ADD. 157 S-1

FED. ROAD DIST. NO.	STATE	FED. AID PROJ. NO.	FISCAL YEAR	SHEET NO.	TOTAL SHEETS
HAWAII	HAW.	I-H3-1(75) UNIT III	1994	158	353

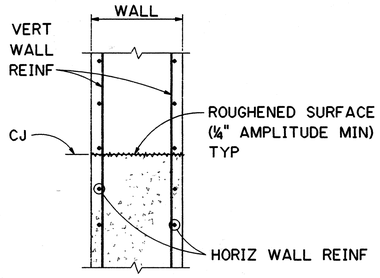

TYPICAL CONSTRUCTION JOINT AT INTERIOR/EXTERIOR WALL

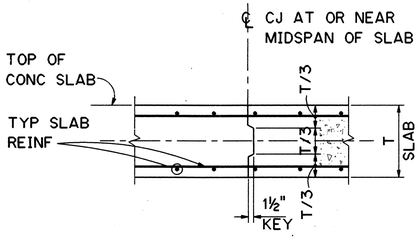

TYPICAL CONSTRUCTION JOINT AT FLOOR OR ROOF SLAB

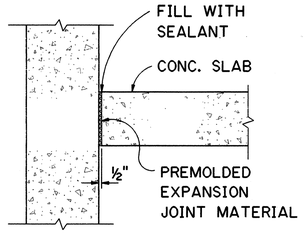

TYPICAL EXPANSION JOINT DETAIL

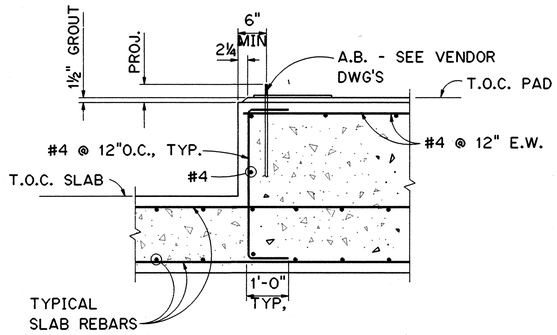

TYPICAL EQUIPMENT PAD

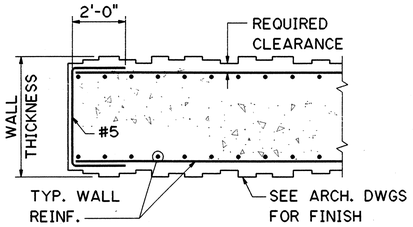

TYP. WALL WITH RANDOM BOARD TEXTURE DETAIL

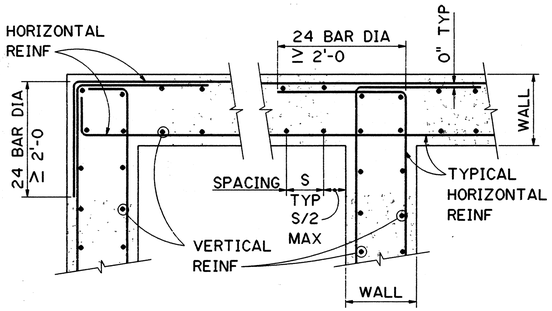

AT CORNER AT INTERSECTION

TYPICAL CONCRETE WALL INTERSECTIONS MONOLITHIC POUR

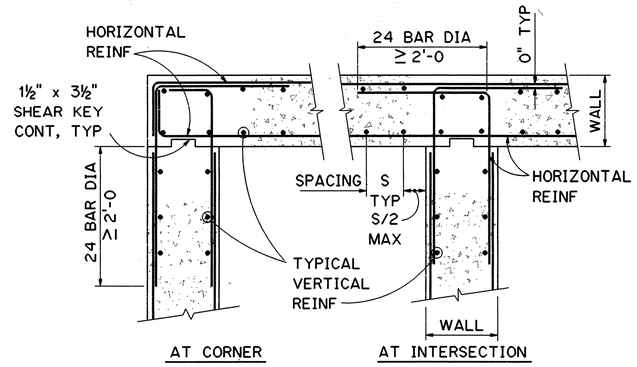

AT CORNER AT INTERSECTION

TYPICAL CONCRETE WALL INTERSECTIONS W/ CONSTRUCTION JOINTS

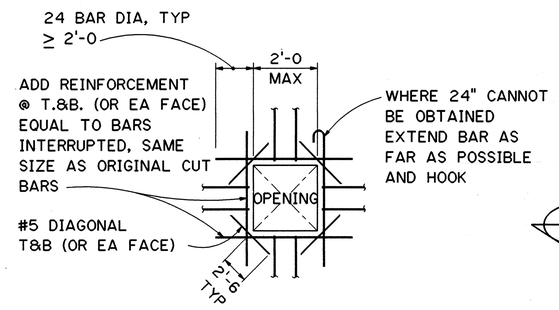

TYPICAL REINFORCEMENT AT OPENINGS LESS THAN 2'-0 x 2'-0

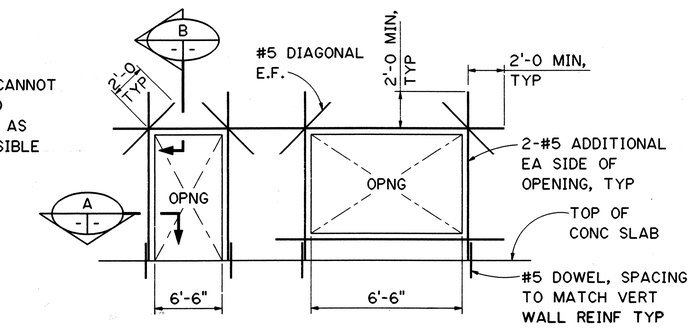

TYPICAL ADDITIONAL REINFORCEMENT AT WALL OPENINGS GREATER THAN 2'-0 x 2'-0

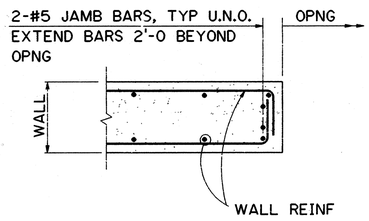

TYPICAL REINFORCEMENT AT SIDE OF OPENING

SECTION A
N.T.S.

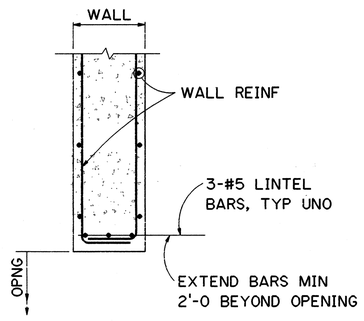

TYPICAL REINFORCEMENT AT HEAD OR SILL OF OPENING

SECTION B
N.T.S.

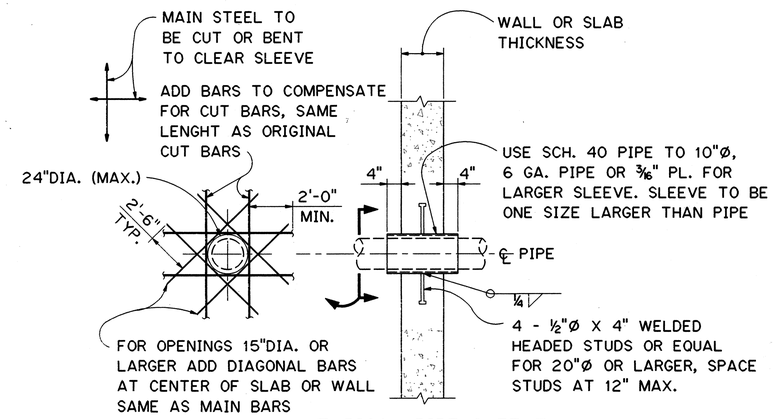

TYPICAL PIPE SLEEVE

DETAIL 1
N.T.S.

DATE	REVISION

STATE OF HAWAII
DEPARTMENT OF TRANSPORTATION
HIGHWAYS DIVISION

STANDARD DETAILS

TRAFFIC OPERATIONS CENTER EXPANSION
H-3 FINISH (UNIT III)
FAIP NO. I-H3-1(75), UNIT III
T.K. TUNNEL/ACCESS ROADS

SCALE: NOT TO SCALE DATE: JUN 1995

PETER G. BIBBES LICENSED PROFESSIONAL ENGINEER No. 6467-S HAWAII, U.S.A.

THIS WORK WAS PREPARED BY ME OR UNDER MY SUPERVISION

SHEET NO. 3S1 OF 22 SHEETS

ORIGINAL PLAN		DATE
SURVEY PLOTTED BY	F. M. CARZON	NOV 94
DRAWN BY		
TRACED BY	G. BENKOVICH	NOV 94
NOTE BOOK		
DESIGNED BY		
QUANTITIES BY	M. S. OWYANG	DEC 94
NO.	CHECKED BY	

CARZON FLWOOD::2410:DWG.STRUCT:ST016.FGB7T 25JAN95-11.09.50

FED. ROAD DIST. NO.	STATE	FED. AID PROJ. NO.	FISCAL YEAR	SHEET NO.	TOTAL SHEETS
HAWAII	HAW.	I-H3-1(75) UNIT III	1994	159	353

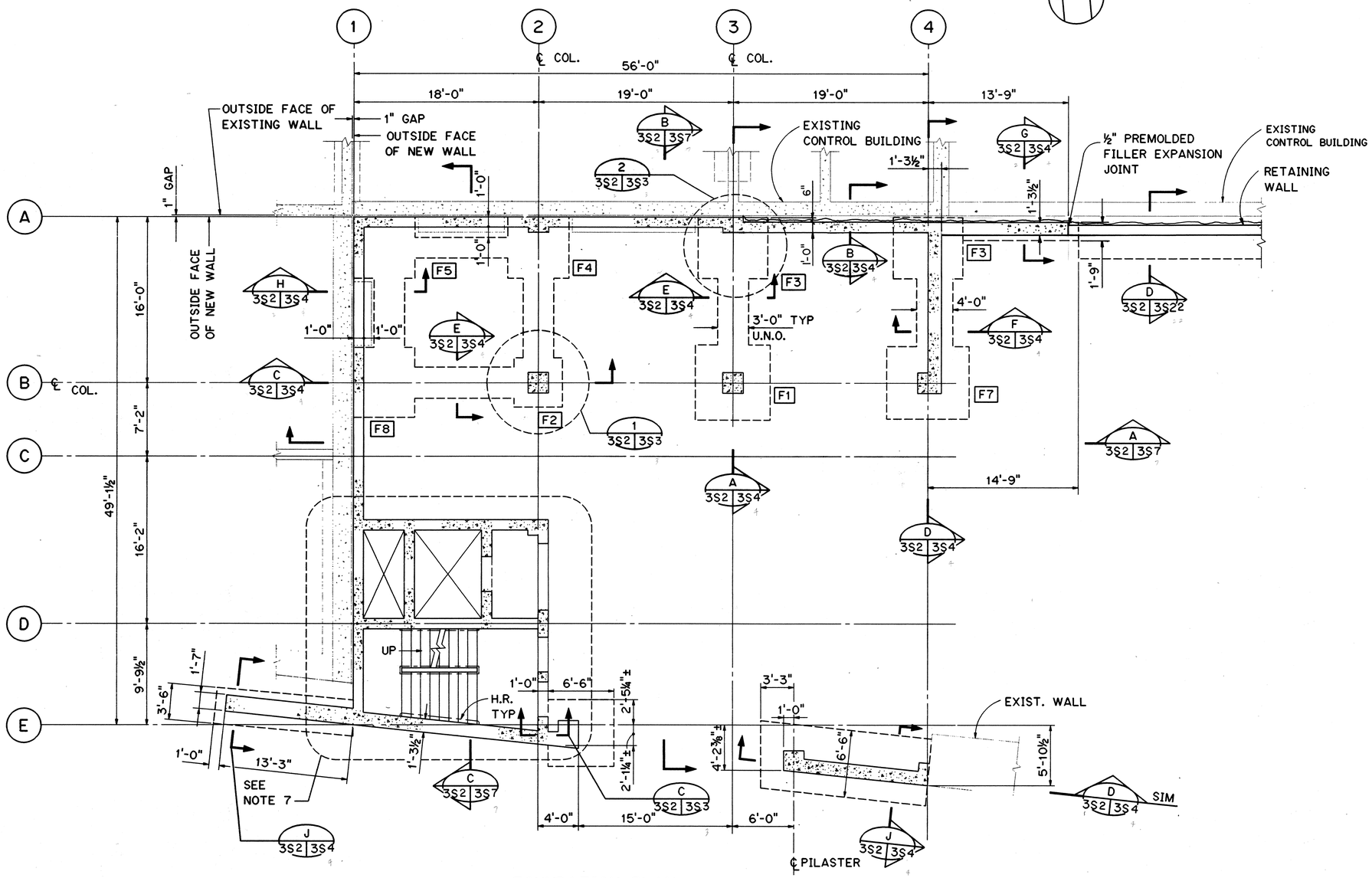

FOUNDATION PLAN

NOTES:

1. FOR GENERAL STRUCTURAL NOTES, SEE SHT NO. 1G12.
2. FOR DIMENSIONS NOT SHOWN, SEE ARCHITECTURAL PLANS.
3. FOR TYPICAL WALL REINFORCING ARRANGEMENT, SEE SHT NO. 3S1.
4. FOR PIPE AND CONDUIT PENETRATIONS NOT SHOWN, SEE CIVIL, MECHANICAL AND ELECTRICAL PLANS.
5. CONTRACTOR SHALL VERIFY ALL DIMENSIONS AND ELEVATIONS PRIOR TO CONSTRUCTION.
6. WALL THICKNESS SHOWN ARE NOMINAL THICKNESSES INCLUDING RANDOM BOARD TEXTURE.
7. FOR COLUMN AND PILASTER SIZES AND REINFORCING DETAILS, SEE SHT NO. 3S13.
8. FOR STAIRS AND ELEVATOR SHAFT LAYOUT AND DETAILS, SEE SHT NO. 3S18 AND 3S19.
9. THE ALLOWABLE BEARING PRESSURE USED FOR DESIGN OF FOUNDATIONS IS 6 KSF FOR DEAD LOAD PLUS LIVE LOAD.
10. FOR FOOTING SCHEDULE SEE SHT NO. 3S3.

LEGEND

F2 - DENOTES FOOTING TYPE

FOR DETAIL AS-BUILT INFORMATION REFER TO CONSTRUCTION SUBMITTALS

DATE	REVISION
8/28/96	DCN 75-008: REV. RETAINING WALL, WING WALL AND WALL BETWEEN COLS 3 AND 4 ALONG LINE A

GRAPHIC SCALE

4' 0' 4' 8' 12'

3/16" = 1'-0"

PETER G. BIBBES LICENSED PROFESSIONAL ENGINEER No. 6467-S HAWAII, U.S.A.

THIS WORK WAS PREPARED BY ME OR UNDER MY SUPERVISION

STATE OF HAWAII
DEPARTMENT OF TRANSPORTATION
HIGHWAYS DIVISION

FOUNDATION PLAN

TRAFFIC OPERATIONS CENTER EXPANSION
H-3 FINISH (UNIT III)
FAIP NO. I-H3-1(75), UNIT III
T.K. TUNNEL/ACCESS ROADS

SCALE: 3/16" = 1'-0" DATE: JUN 1995

SHEET NO. 3S2 OF 22 SHEETS

		DATE
ORIGINAL PLAN	SURVEY PLOTTED BY	
	DRAWN BY	R. HERNANDEZ NOV 94
NOTE BOOK	TRACED BY	
	DESIGNED BY	B. BENKOVICH NOV 94
	QUANTITIES BY	
NO.	CHECKED BY	M.S. ONYANG DEC 94

CARZON ELWOOD::2410:[DWG.STRUCT]ST029.FGB71 25JAN95-11.14.10

FED. ROAD DIST. NO.	STATE	FED. AID PROJ. NO.	FISCAL YEAR	SHEET NO.	TOTAL SHEETS
HAWAII	HAW.	I-H3-1(75) UNIT III	1994	160	353

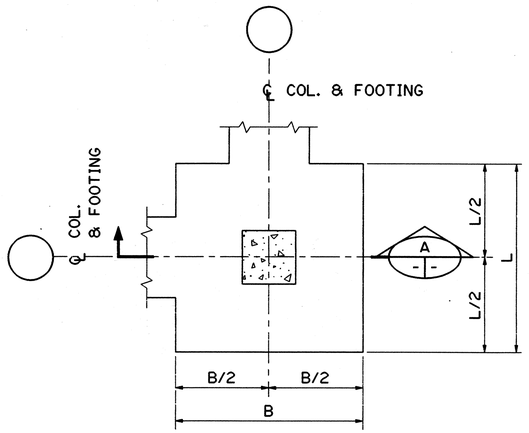

DETAIL 1 (3S2 | 3S3)

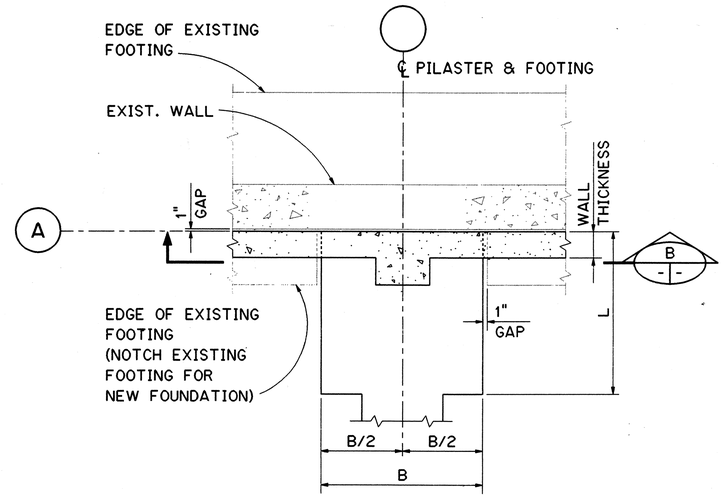

DETAIL 2 (3S2 | 3S3)

FOOTING SCHEDULE

FOOTING TYPE	L	B	TIE - BEAM REINFORCEMENT	B.O. FOOTING ELEVATION
F1	7'-3"	7'-3"	7-#8	1033.00
F2	5'-0"	5'-0"	6-#8	1033.00
F3	6'-0"	6'-9"	7-#8	1033.00
F4	6'-0"	6'-0"	6-#8	1033.00
F5	6'-0"	6'-0"	6-#8	1031.00
F6			NOT USED	
F7	7'-0"	8'-0"	7-#8	1033.00
F8	6'-9"	6'-9"	6-#8	1031.00
F9	3'-3"	6'-6"	-	1036.50

NOTES:

1. FOR GENERAL STRUCTURAL NOTES, SEE SHT. NO. 1G12.
2. FOR TYPICAL WALL REINFORCING ARRANGEMENT, SEE SHT. NO. 3S1.
3. CONTRACTOR SHALL VERIFY ALL DIMENSIONS AND ELEVATIONS PRIOR TO CONSTRUCTION.
4. FOR COLUMN AND PILASTER SIZES AND REINFORCING DETAILS, SEE SHT. NO. 3S13.

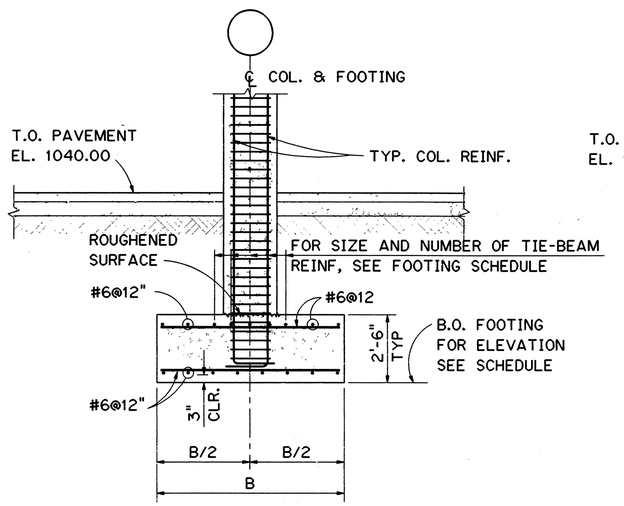

SECTION A

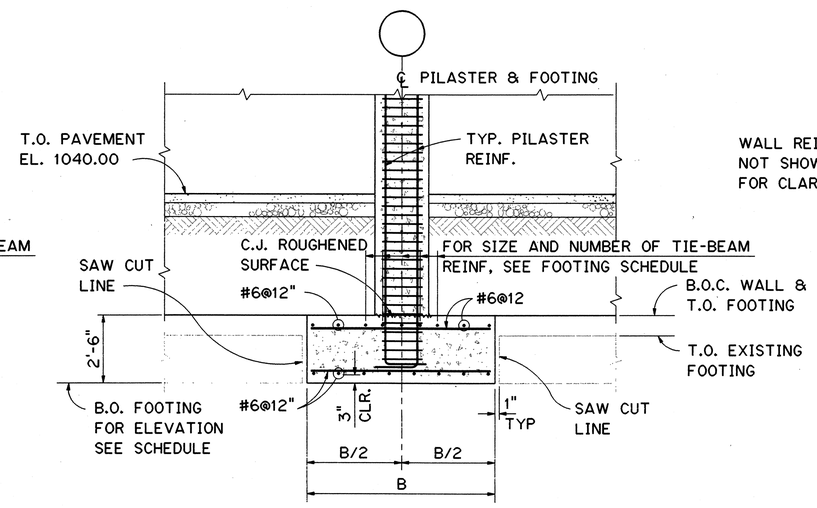

SECTION B

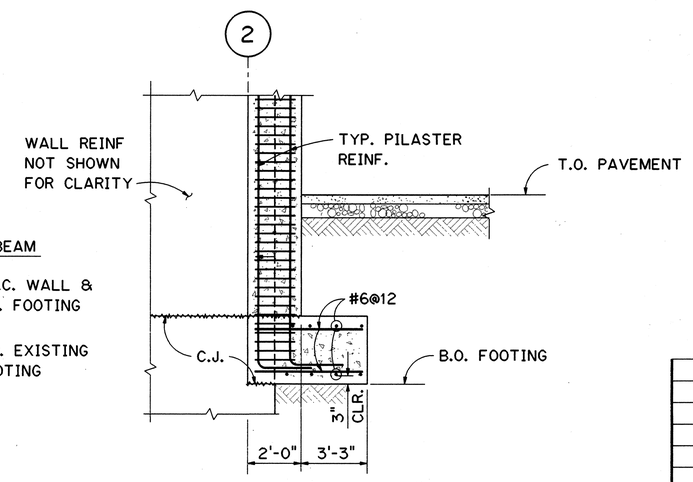

SECTION C (3S2 | 3S3)

DATE	REVISION

STATE OF HAWAII
DEPARTMENT OF TRANSPORTATION
HIGHWAYS DIVISION

FOUNDATION SECTIONS AND DETAILS - 1

TRAFFIC OPERATIONS CENTER EXPANSION
H-3 FINISH (UNIT III)
FAIP NO. I-H3-1(75), UNIT III
T.K. TUNNEL/ACCESS ROADS

SCALE: NOT TO SCALE DATE: JUN 1995

PETER G. BIBBES LICENSED PROFESSIONAL ENGINEER No. 6467-S HAWAII, U.S.A.

THIS WORK WAS PREPARED BY ME OR UNDER MY SUPERVISION

ORIGINAL PLAN		SURVEY PLOTTED BY	R. HERNANDEZ	DATE NOV '94
		DRAWN BY	"	" NOV '94
		TRACED BY	"	" NOV '94
NOTE BOOK		DESIGNED BY	G. BENKOVICH	NOV '94
		QUANTITIES BY		
NO.		CHECKED BY	M.S. OWYANG	" DEC '94

SHEET NO. 3S3 OF 22 SHEETS

FED. ROAD DIST. NO.	STATE	FED. AID PROJ. NO.	FISCAL YEAR	SHEET NO.	TOTAL SHEETS
HAWAII	HAW.	I-H3-1(75) UNIT III	1994	161	353

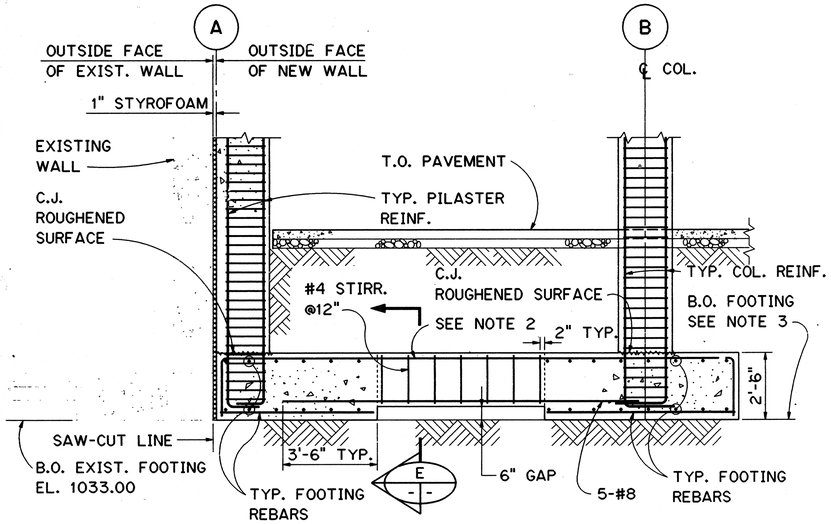

SECTION A
SCALE: 3/8" = 1'-0" 3S2 3S4

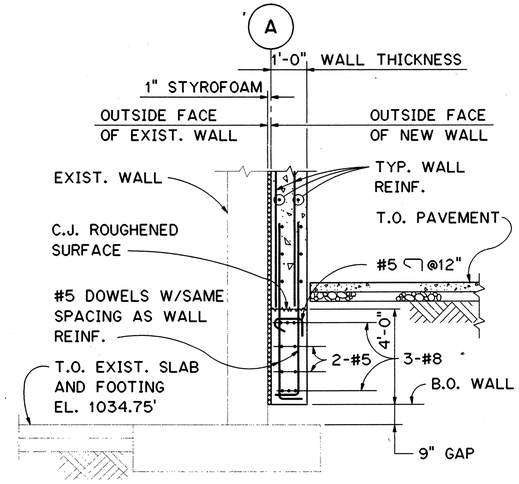

SECTION B
SCALE: 3/8" = 1'-0" 3S2 3S4

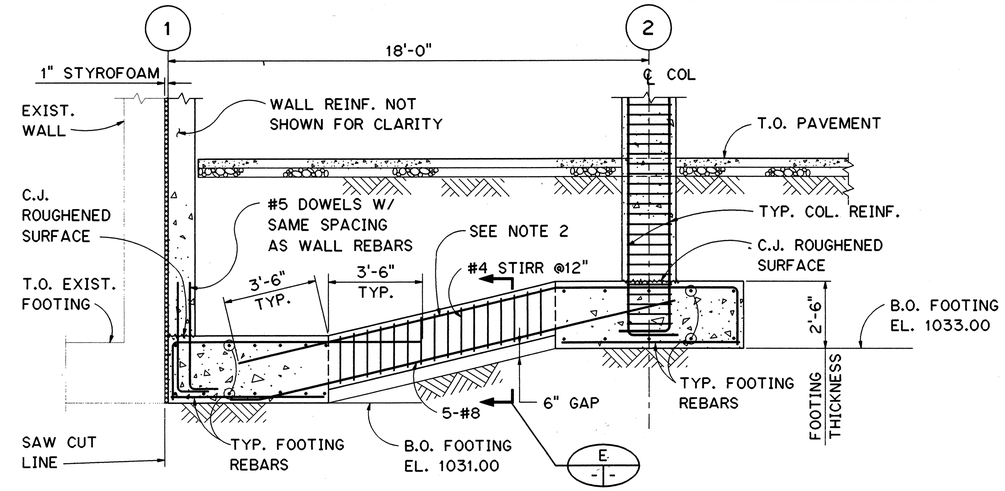

SECTION C
SCALE: 3/8" = 1'-0" 3S2 3S4

NOTES:

1. FOR GENERAL STRUCTURAL NOTES, SEE SHT. NO. 1G12.
2. FOR SIZE AND NUMBER OF REBARS, SEE SCHEDULE SHT. NO. 3S3.
3. FOR BOTTOM OF FOOTING ELEVATION, SEE SCHEDULE SHT. NO. 3S3.

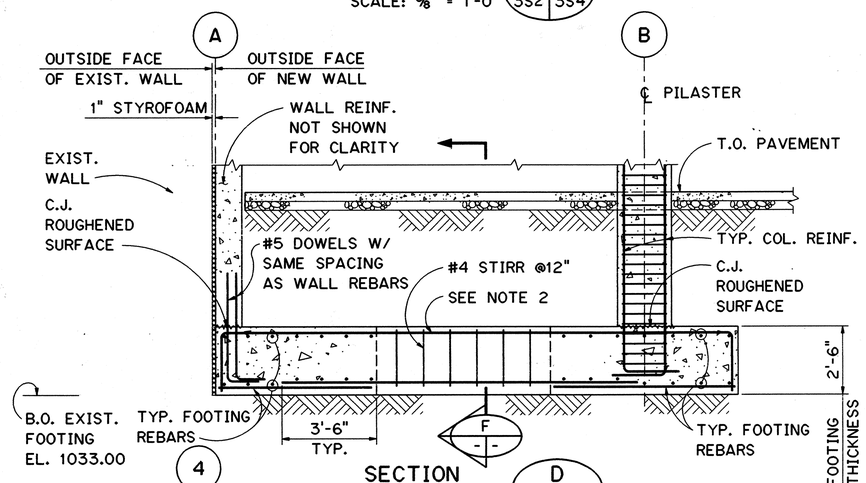

SECTION D
SCALE: 3/8" = 1'-0" 3S2 3S4

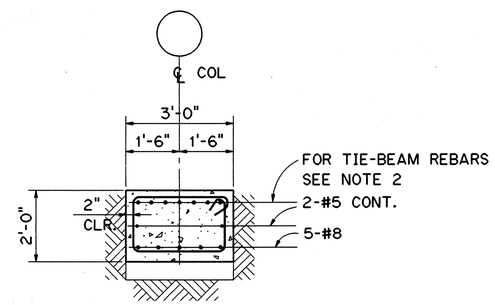

SECTION E
SCALE: 1/2" = 1'-0" 3S2 3S4

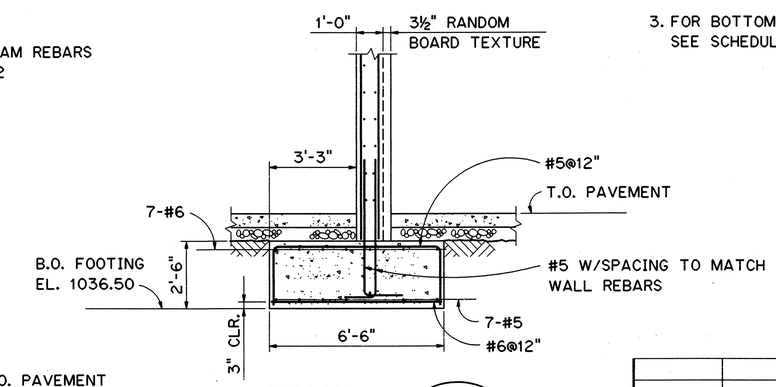

SECTION J
SCALE: 3/8" = 1'-0" 3S2 3S4

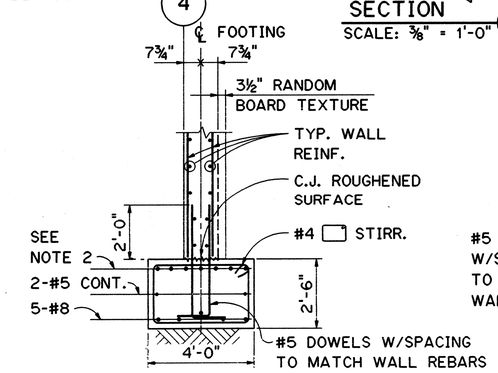

SECTION F
SCALE: 3/8" = 1'-0" 3S2 3S4

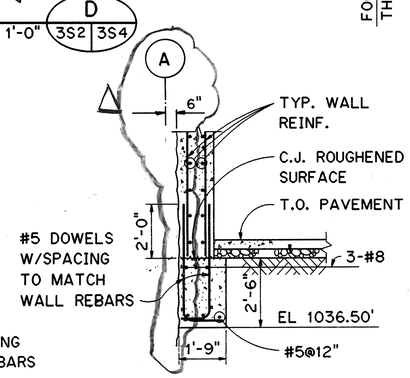

SECTION G
SCALE: 3/8" = 1'-0" 3S2 3S4

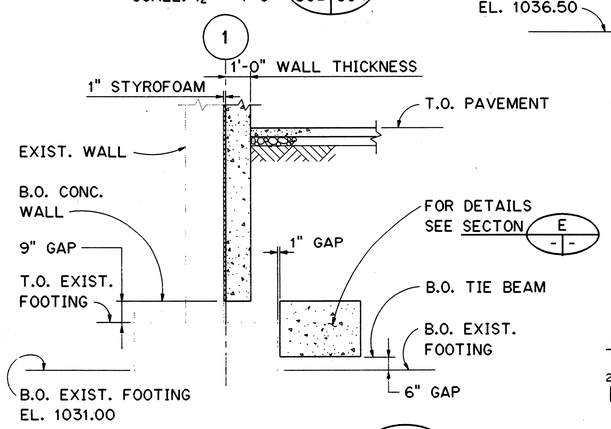

SECTION H
SCALE: 3/8" = 1'-0" 3S2 3S4

GRAPHIC SCALE

2' 1' 0' 2' 4'
1/2" = 1'-0"

2' 0' 2' 4' 6'
3/8" = 1'-0"

PETER G. BIBBES
LICENSED PROFESSIONAL ENGINEER
No. 6467-S
HAWAII, U.S.A.

THIS WORK WAS PREPARED BY ME OR UNDER MY SUPERVISION

DATE	REVISION
8/28/96	DCN 75-008: REV. SECTION G

STATE OF HAWAII
DEPARTMENT OF TRANSPORTATION
HIGHWAYS DIVISION

FOUNDATION SECTIONS AND DETAILS - 2

TRAFFIC OPERATIONS CENTER EXPANSION
H-3 FINISH (UNIT III)
FAIP NO. I-H3-1(75), UNIT III
T.K. TUNNEL/ACCESS ROADS

SCALE: AS SHOWN DATE: JUN 1995

SHEET NO. 3S4 OF 22 SHEETS

ORIGINAL PLAN		DATE
SURVEY PLOTTED BY	F.M. CARZON	NOV 94
DRAWN BY		
TRACED BY		
NOTE BOOK	DESIGNED BY G. BERKOVICH	NOV 94
	QUANTITIES BY M.S. OWYANG	DEC 94
NO.	CHECKED BY	

CARZON ELWOOD::2410:DWG.STRUCT3ST017.FGB71 25JAN95-13.00.20

FED. ROAD DIST. NO.	STATE	FED. AID PROJ. NO.	FISCAL YEAR	SHEET NO.	TOTAL SHEETS
HAWAII	HAW.	I-H3-1(75) UNIT III	1994	162	353

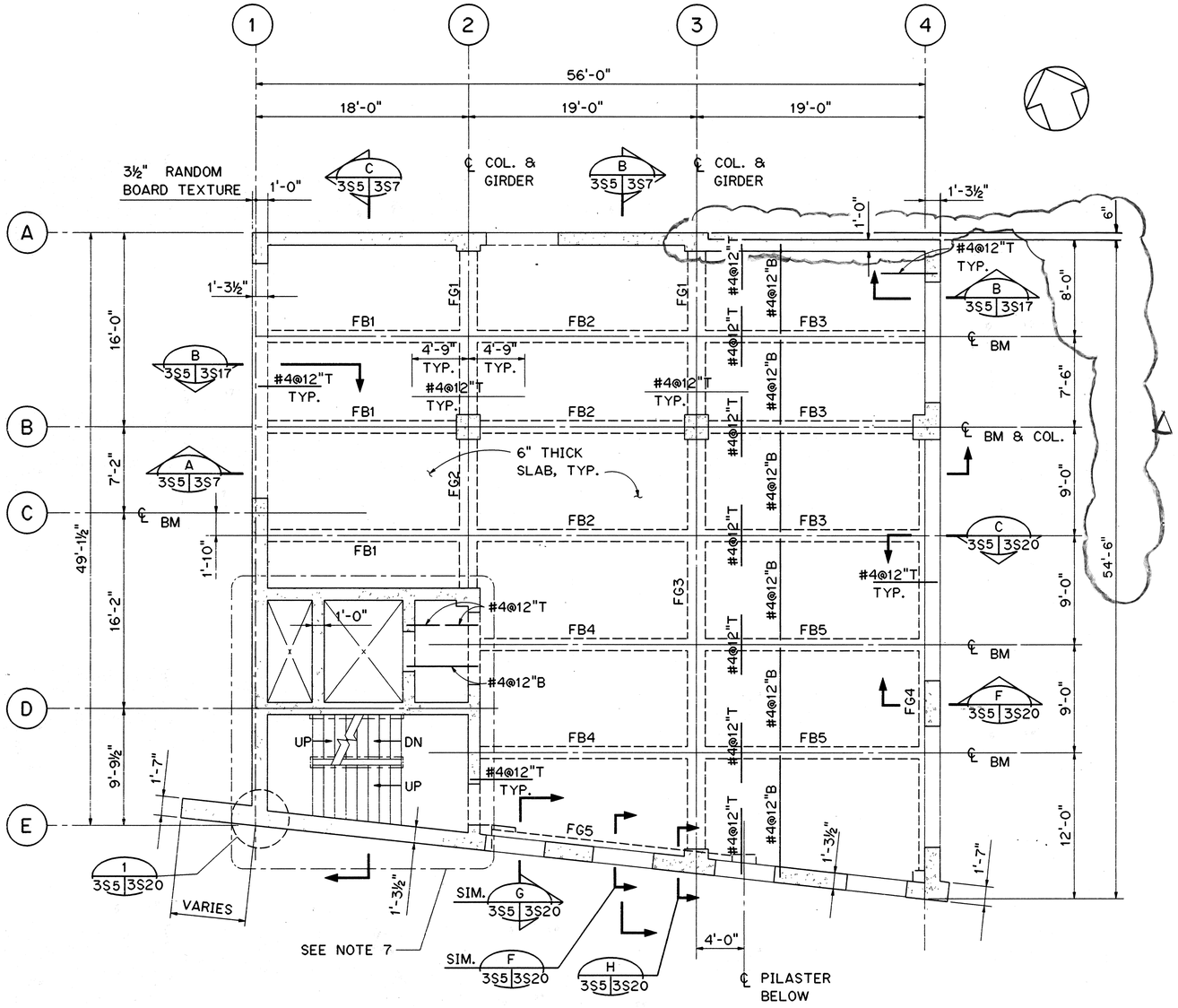

SECOND LEVEL FRAMING PLAN

NOTES:

1. FOR GENERAL STRUCTURAL NOTES SEE SHT. NO. 1G12.
2. FOR TYPICAL SLAB REINFORCEMENT LAYOUT, SEE SHT. NO. 3S10.
3. FOR TYPICAL BEAM AND GIRDER REINFORCEMENT LAYOUT, SEE SHT. NO. 3S11.
4. FOR BEAM SCHEDULE, SEE SHT. NO. 3S12.
5. FOR STRUCTURAL STANDARD DETAILS SEE SHT. NO. 3S1.
6. WALL THICKNESSES ARE NOMINAL THICKNESSES INCLUDING RANDOM BOARD TEXTURE. FOR LOCATION AND LIMITS OF RANDOM BOARD TEXTURE, SEE ARCHITECTURAL DRAWINGS.
7. FOR STAIRS AND ELEVATOR SHAFT LAYOUT AND DETAILS SEE SHT. NO. 3S8 AND 3S18.

ORIGINAL PLAN		DATE
SURVEY PLOTTED BY		
DRAWN BY	F. M. CARZON	NOV 94
TRACED BY		" "
DESIGNED BY	G. BENKOVICH	NOV 94
QUANTITIES BY		" "
CHECKED BY	M. S. OWYANG	DEC 94
NOTE BOOK		
NO.		

GRAPHIC SCALE

4' 2' 0' 5' 10'

3/16" = 1'-0"

PETER G. BIBBES
LICENSED PROFESSIONAL ENGINEER
No. 6467-S
HAWAII, U.S.A.

THIS WORK WAS PREPARED BY ME OR UNDER MY SUPERVISION

DATE	REVISION
8/28/96	DCN 75-008: REV. WALL ALONG LINE A BETWEEN COLS 3 AND 4

STATE OF HAWAII
DEPARTMENT OF TRANSPORTATION
HIGHWAYS DIVISION

SECOND LEVEL FRAMING PLAN

TRAFFIC OPERATIONS CENTER EXPANSION
H-3 FINISH (UNIT III)
FAIP NO. I-H3-1(75), UNIT III
T.K. TUNNEL/ACCESS ROADS

SCALE: 3/16" = 1'-0" DATE: JUN 1995

SHEET NO. 3S5 OF 22 SHEETS

CARZON ELWOOD::2410:[DWG.STRUCT]ST030.FGB71 25JAN95-13.02.50

FED. ROAD DIST. NO.	STATE	FED. AID PROJ. NO.	FISCAL YEAR	SHEET NO.	TOTAL SHEETS
HAWAII	HAW.	I-H3-1(75) UNIT III	1994	163	353

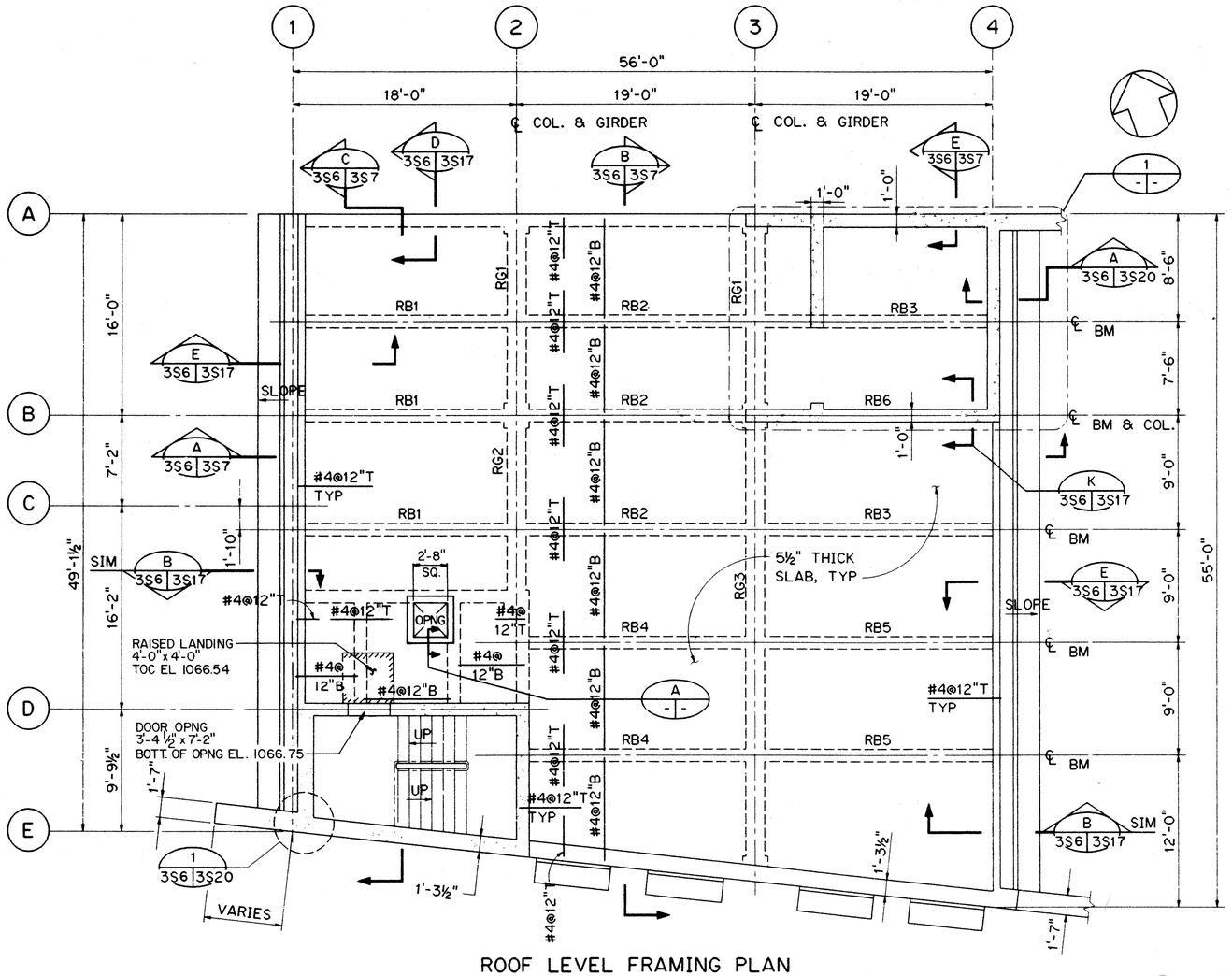

ROOF LEVEL FRAMING PLAN

SCALE: 3/16" = 1'-0"

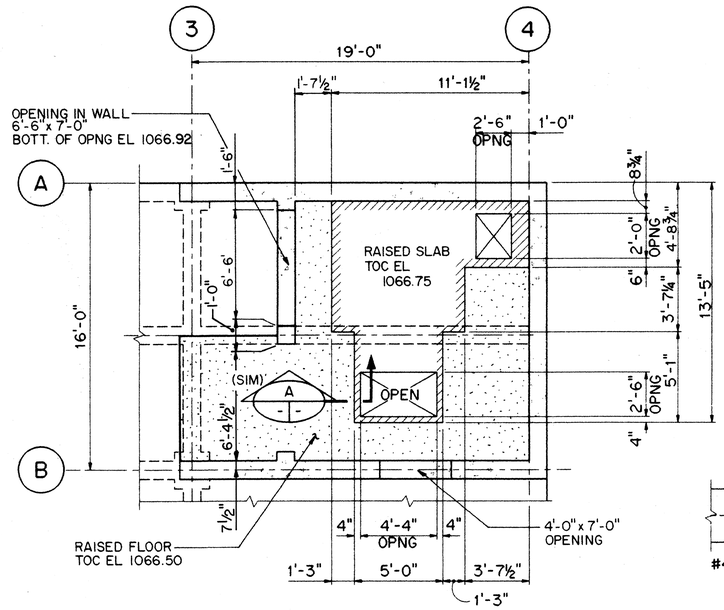

DETAIL 1

SCALE: ¼" = 1'-0"

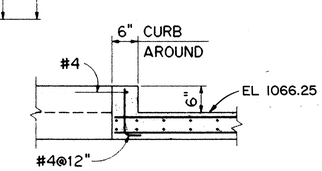

SECTION A

SCALE: ¾" = 1'-0"

NOTES:

1. FOR GENERAL STRUCTURAL NOTES SEE SHT. NO. 1G12.
2. FOR TYPICAL SLAB REINFORCEMENT LAYOUT, SEE SHT. NO. 3S10.
3. FOR TYPICAL BEAM AND GIRDER REINFORCEMENT LAYOUT, SEE SHT. NO. 3S11.
4. FOR BEAM SCHEDULE, SEE SHT. NO. 3S12.
5. FOR STRUCTURAL STANDARD DETAILS SEE SHT. NO. 3S1.
6. WALL THICKNESSES ARE NOMINAL THICKNESSES INCLUDING RANDOM BOARD TEXTURE. FOR LOCATION AND LIMITS OF RANDOM BOARD TEXTURE, SEE ARCHITECTURAL PLANS.

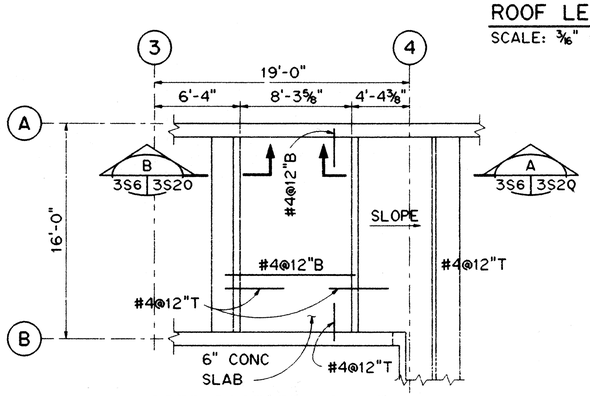

UPPER ROOF FRAMING PLAN

SCALE: 3/16" = 1'-0"

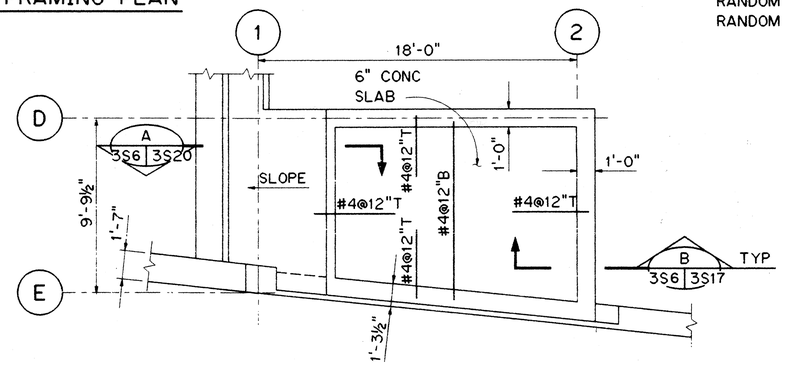

STAIRS ROOF FRAMING PLAN

SCALE: ¼" = 1'-0"

GRAPHIC SCALE

3/16" = 1'-0"

¼" = 1'-0"

PETER G. BIBBES LICENSED PROFESSIONAL ENGINEER No. 6467-S HAWAII, U.S.A.

THIS WORK WAS PREPARED BY ME OR UNDER MY SUPERVISION

DATE	REVISION
1/9/97	DCN 75-009: REVISED PER RESPONSE TO RFI # 4097-170
8/28/96	DCN 75-008: ADDED SECT. E REFERENCE
10/13/95	ADDENDUM 1

STATE OF HAWAII
DEPARTMENT OF TRANSPORTATION
HIGHWAYS DIVISION

ROOF LEVEL FRAMING PLAN

TRAFFIC OPERATIONS CENTER EXPANSION
H-3 FINISH (UNIT III)
FAIP NO. I-H3-1(75), UNIT III
T.K. TUNNEL/ACCESS ROADS

SCALE: AS NOTED DATE: JUN 1995

SHEET NO. 3S6 OF 22 SHEETS

ORIGINAL PLAN	SURVEY PLOTTED BY	DATE
	DRAWN BY F. M. CABZON	NOV '94
	TRACED BY	NOV '94
NOTE BOOK	DESIGNED BY G. BERKOVICH	NOV '94
	QUANTITIES BY	DEC '94
NO.	CHECKED BY M. S. OWYANG	

CARZON ELWOOD::2410:DWG.STRUCT\3S1002.FGB\T 25JAN95-13.05.20

ADD. 163

FED. ROAD DIST. NO.	STATE	FED. AID PROJ. NO.	FISCAL YEAR	SHEET NO.	TOTAL SHEETS
HAWAII	HAW.	I-H3-1(75) UNIT III	1994	164	353

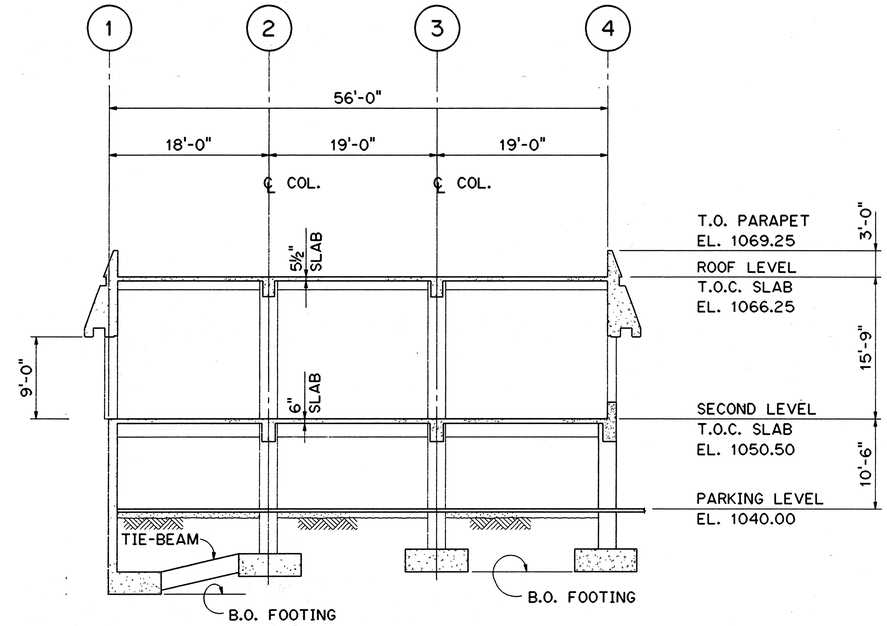

SECTION A
SCALE: ⅛" = 1'-0"
3S2 | 3S7
3S5
3S6

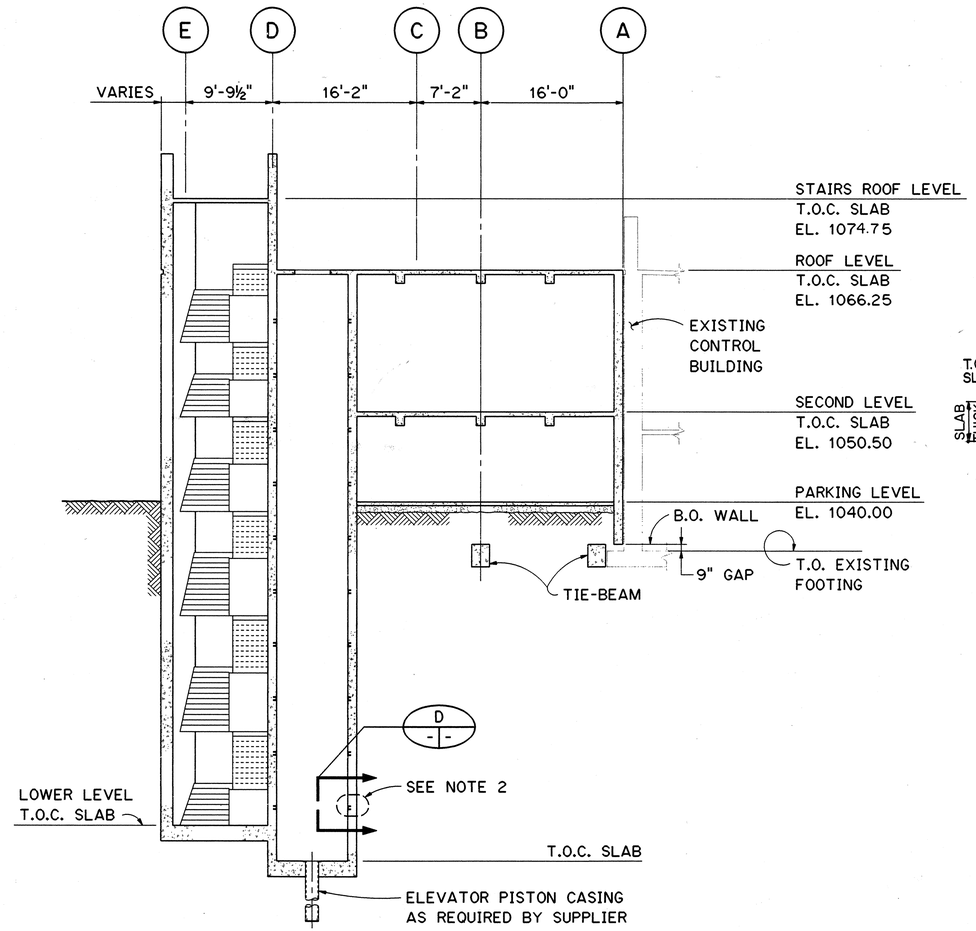

SECTION C
SCALE: ⅛" = 1'-0"
3S2 | 3S7
3S5
3S6

NOTES:

1. FOR GENERAL STRUCTURAL NOTES SEE SHT. NO. 1G12.
2. FOR LOCATION AND SPACING OF EMBEDDED PLATES, SEE VENDOR DRAWINGS AND SPECIFICATIONS.

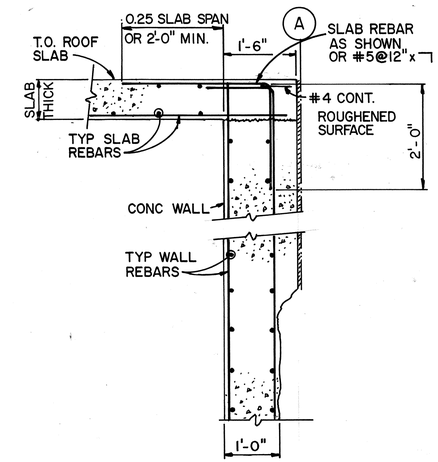

SECTION E
NOT TO SCALE
3S6 | 3S7

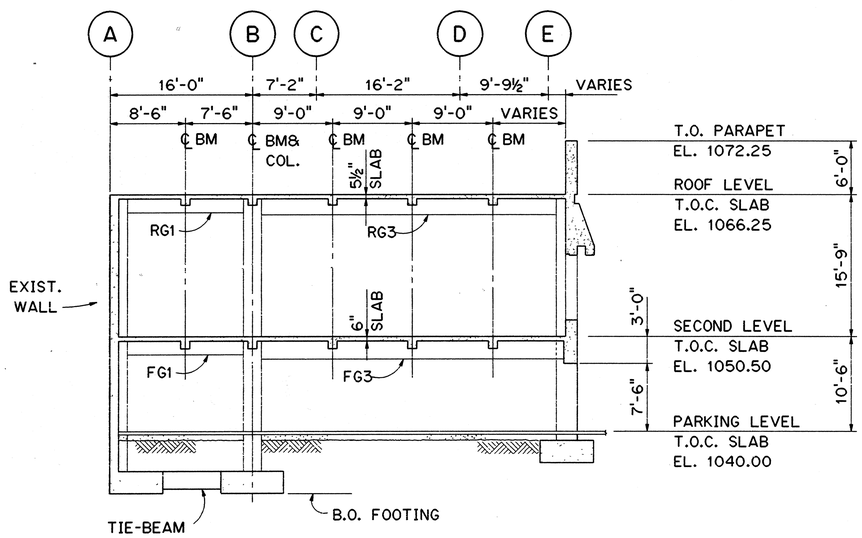

SECTION B
SCALE: ⅛" = 1'-0"
3S2 | 3S7
3S5
3S6

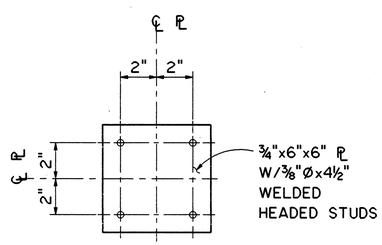

SECTION D
SCALE: 3" = 1'-0"
- | -

GRAPHIC SCALE
8' 4' 0' 8' 16'
⅛" = 1'-0"
0' 3" 6" 9" 1'
3" = 1'-0"

PETER G. BIBBES
LICENSED PROFESSIONAL ENGINEER
No. 6467-8
HAWAII, U.S.A.

THIS WORK WAS PREPARED BY ME OR UNDER MY SUPERVISION

DATE	REVISION
8/28/96	DCN 75-008: ADDED SECTION E

STATE OF HAWAII
DEPARTMENT OF TRANSPORTATION
HIGHWAYS DIVISION

SECTIONS AND DETAILS

TRAFFIC OPERATIONS CENTER EXPANSION
H-3 FINISH (UNIT III)
FAIP NO. I-H3-1(75), UNIT III
T.K. TUNNEL/ACCESS ROADS

SCALE: AS SHOWN DATE: JUN 1995

SHEET NO. 3S7 OF 22 SHEETS

ORIGINAL PLAN			
NOTE BOOK	SURVEY PLOTTED BY		
	DRAWN BY	F. M. CARZON	NOV 94
	TRACED BY		
	DESIGNED BY	G. BENKOVICH	NOV 94
	QUANTITIES BY		
NO.	CHECKED BY	N. S. OWYANG	DEC 94

CARZON L:W=GP:L.4 0:?DWG.STRUCT3S7005.FGB?? 25JAN95-13.09.00

FED. ROAD DIST. NO.	STATE	FED. AID PROJ. NO.	FISCAL YEAR	SHEET NO.	TOTAL SHEETS
HAWAII	HAW.	I-H3-1(75) UNIT III	1994	165	353

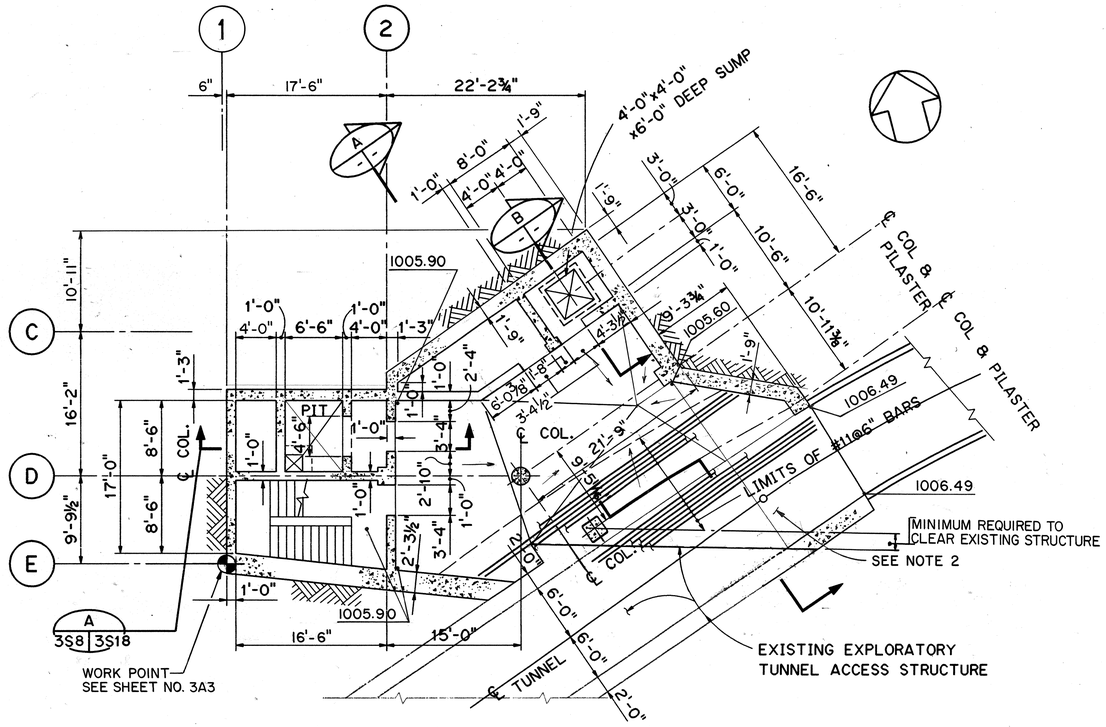

VEHICLE TURNAROUND AREA
LOWER LEVEL PLAN
SCALE: ⅛" = 1'-0"

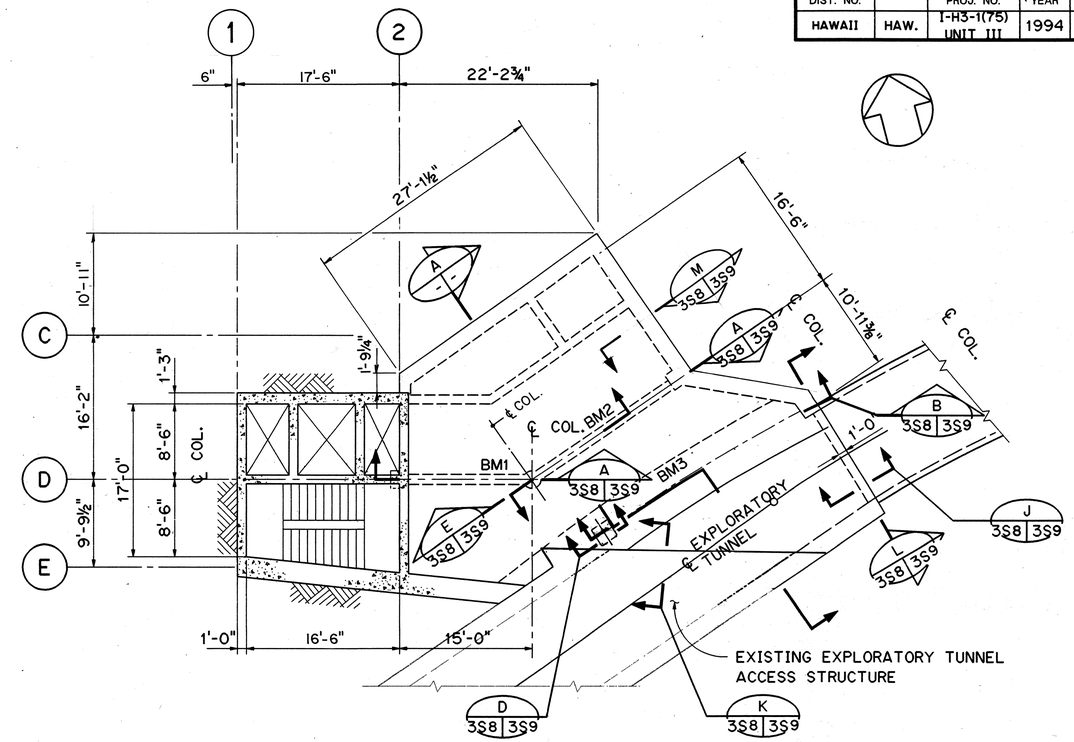

VEHICLE TURNAROUND AREA
LOWER LEVEL ROOF FRAMING PLAN
SCALE: ⅛" = 1'-0"

NOTES:

1. FOR GENERAL STRUCTURAL NOTES, SEE SHT NO. 1G12.
2. FOR TOP OF CONCRETE SLAB ELEVATIONS NOT SHOWN SEE SHT NO. 2C5.

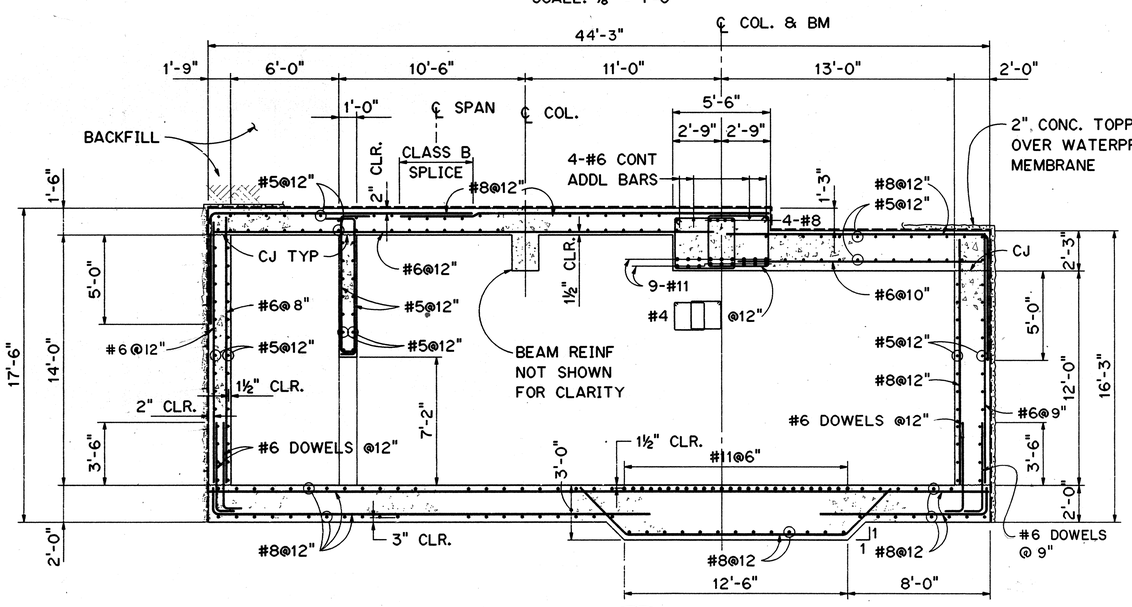

SECTION A
SCALE: ¼" = 1'-0"

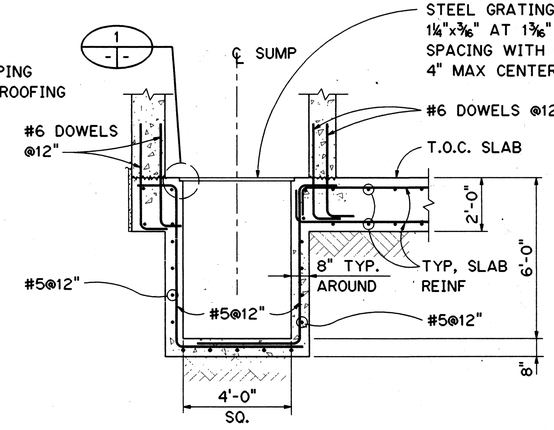

SECTION B
SCALE: ⅜"=1'-0"

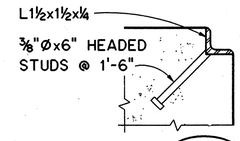

DETAIL 1
SCALE: NTS

DATE	REVISION
6/12/96	DCN 75-003: REVISED ET STRUCTURE TO REFLECT EXISTING CONDITIONS, RELOCATED COLUMN, INDICATED 6" OFFSET ALONG COL. LINE I, REVISED DOOR OPENING SIZE AND LOCATION
6/5/96	DCN 75-002: ADDED REBAR AND THICKENED PART OF PERIMETER WALL IN TURNAROUND AREA.
4/18/96	DCN 75-001: ADDED TOC WORK POINT REFERENCE NOTE.

STATE OF HAWAII
DEPARTMENT OF TRANSPORTATION
HIGHWAYS DIVISION

LOWER LEVEL PLANS

TRAFFIC OPERATIONS CENTER EXPANSION
H-3 FINISH (UNIT III)
FAIP NO. I-H3-1(75), UNIT III
T.K. TUNNEL/ACCESS ROADS

SCALE: ⅛" = 1'-0" DATE: JUN 1995

PETER G. BIBBINS
LICENSED PROFESSIONAL ENGINEER
No. 6467-S
HAWAII, U.S.A.

THIS WORK WAS PREPARED BY ME OR UNDER MY SUPERVISION

GRAPHIC SCALE
8' 4' 0' 8' 16'
⅛" = 1'-0"

ORIGINAL PLAN	SURVEY PLOTTED BY	R. HERNANDEZ	DATE NOV 94
NOTE BOOK	DRAWN BY		NOV 94
	TRACED BY		NOV 94
	DESIGNED BY	G. BENKOVICH	NOV 94
NO.	QUANTITIES BY	M. S. OWYANG	DEC 94
	CHECKED BY		

SHEET NO. 3S8 OF 22 SHEETS

CARZON ELWOOD::2410:DWG.STRUCT\3ST004.FGB71 26JAN95-10.40.20

FED. ROAD DIST. NO.	STATE	FED. AID PROJ. NO.	FISCAL YEAR	SHEET NO.	TOTAL SHEETS
HAWAII	HAW.	I-H3-1(75) UNIT III	1994	166	353

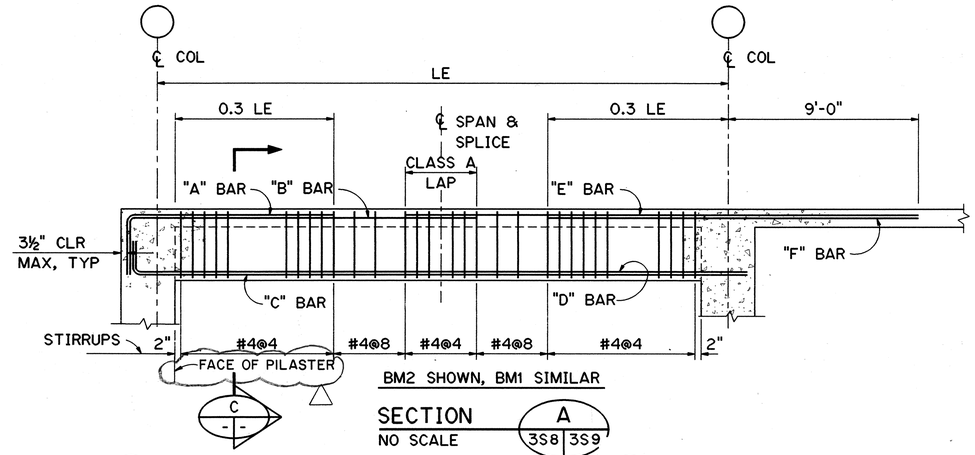

BM2 SHOWN, BM1 SIMILAR

SECTION A (3S8 | 3S9)
NO SCALE

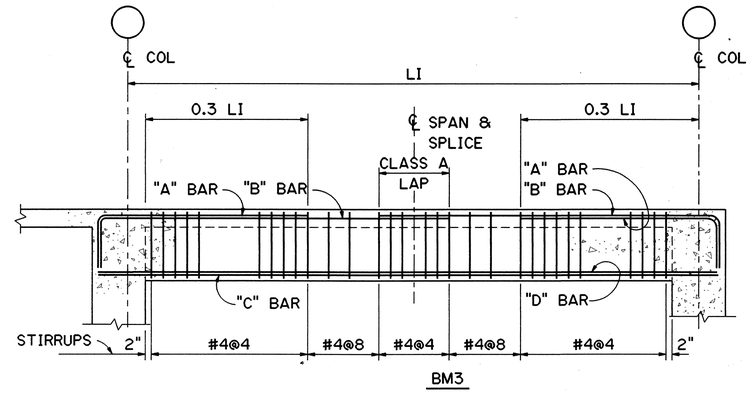

BM3

SECTION B (3S8 | 3S9)
NO SCALE

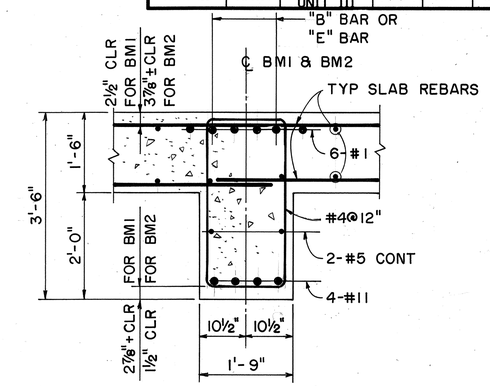

DETAIL C
SCALE: ¾"=1'-0"

NOTES:

1. FOR GENERAL STRUCTURAL NOTES, SEE SHT NO. 1G12.
2. FOR BEAMS AND COLUMNS LOCATION, SEE SHT NO. 3S8.
3. FOR REBARS INDICATED IN SECTIONS A AND B, SEE REBA SCHEDULE ON SHT NO. 3S12.
4. FOR PILASTER SHOWN IN SECTION A SPACING OF #4 TIES SHALL BE 5".

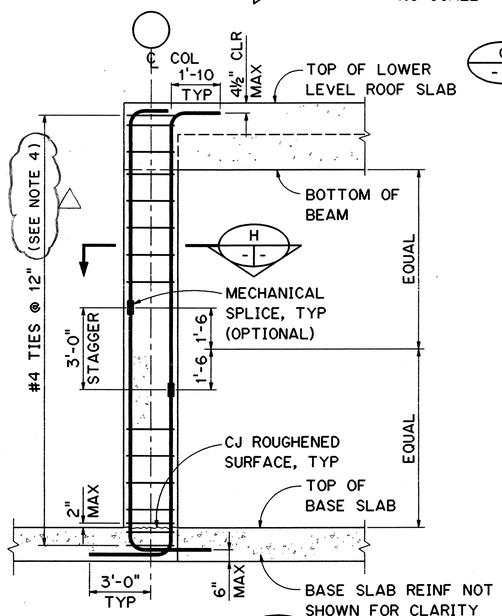

SECTION D
SCALE: ⅜"=1'-0" (3S8 | 3S9)

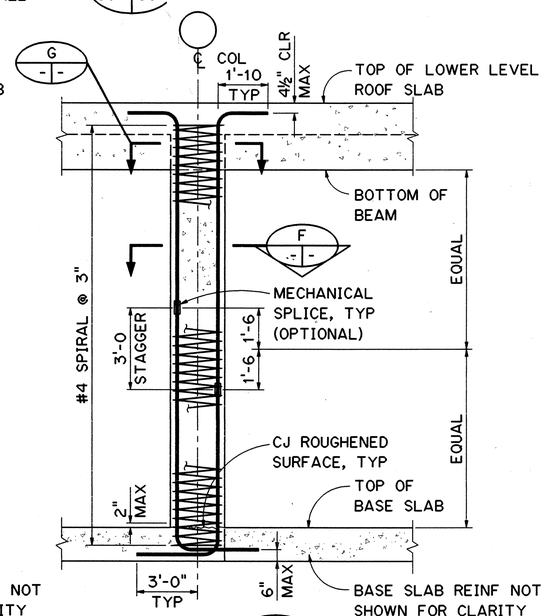

SECTION E
SCALE: ⅜"=1'-0" (3S8 | 3S9)

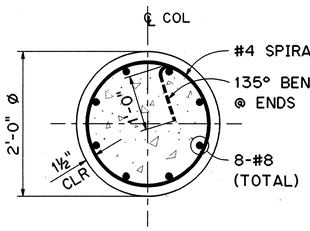

SECTION F
SCALE: 1"=1'-0"

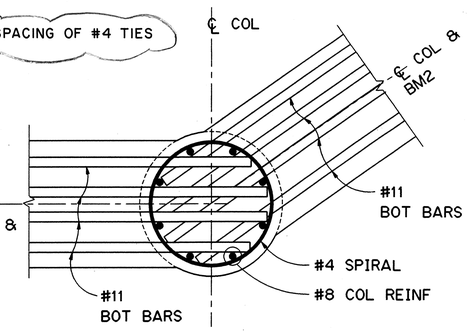

BEAM BOTTOM REBAR IN COLUMN ARRANGEMENT

SECTION G
SCALE: 1"=1'-0"

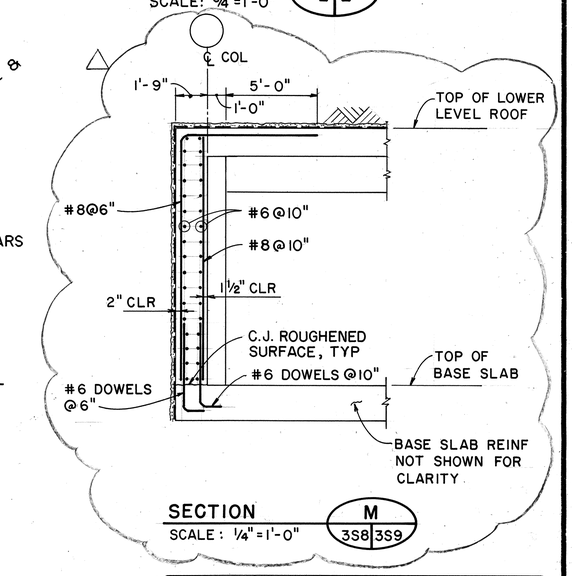

SECTION M
SCALE: ¼"=1'-0" (3S8 | 3S9)

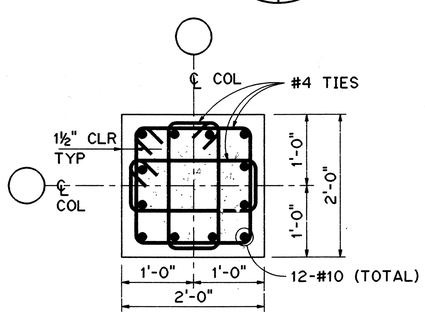

DETAIL H
SCALE: 1"=1'-0"

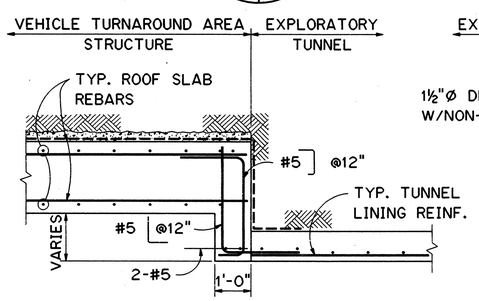

SECTION J
SCALE: ½" = 1'-0" (3S8 | 3S9)

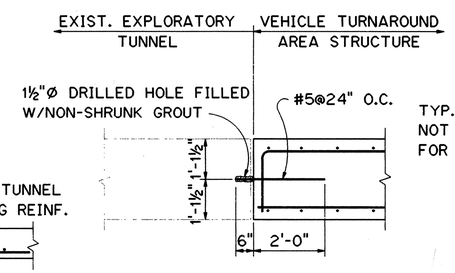

SECTION K
SCALE: ½" = 1'-0" (3S8 | 3S9)

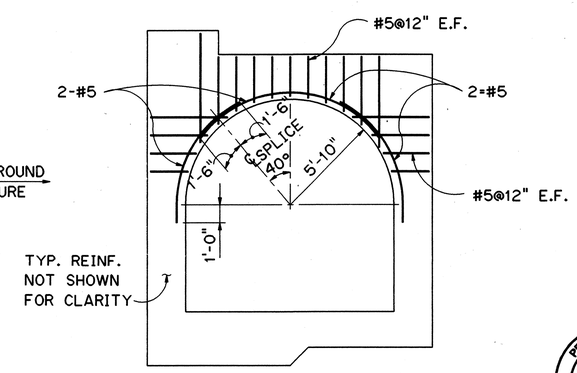

SECTION L
SCALE: ¼" = 1'-0" (3S8 | 3S9)

GRAPHIC SCALE
4' 2' 0' 4' 8'
¼" = 1'-0"

PETER G. BIBBES
LICENSED PROFESSIONAL ENGINEER
No. 6467-S
HAWAII, U.S.A.

THIS WORK WAS PREPARED BY ME OR UNDER MY SUPERVISION

DATE	REVISION
5/24/96	DCN 75-002: ADDED SECTION "M" AND NOTE 4.

STATE OF HAWAII
DEPARTMENT OF TRANSPORTATION
HIGHWAYS DIVISION

LOWER LEVEL
SECTIONS AND DETAILS

TRAFFIC OPERATIONS CENTER EXPANSION
H-3 FINISH (UNIT III)
FAIP NO. I-H3-1(75), UNIT III
T.K. TUNNEL/ACCESS ROADS

SCALE: ⅛" = 1'-0" DATE: JUN 1995

SHEET NO. 3S9 OF 22 SHEETS

ORIGINAL PLAN		DATE
SURVEY PLOTTED BY	F. M. CARZON	NOV 94
DRAWN BY		
TRACED BY	G. BENKOVICH	NOV 94
PLANS PREPARED BY		
QUANTITIES BY	M. S. OWYANG	DEC 94
CHECKED BY		
NOTE BOOK		
NO.		

CARZON ELWOOD::2410:IDWG.STRUCTJST003.PGB71 25JAN95-13.14.10

FED. ROAD DIST. NO.	STATE	FED. AID PROJ. NO.	FISCAL YEAR	SHEET NO.	TOTAL SHEETS
HAWAII	HAW.	I-H3-1(75) UNIT III	1994	167	353

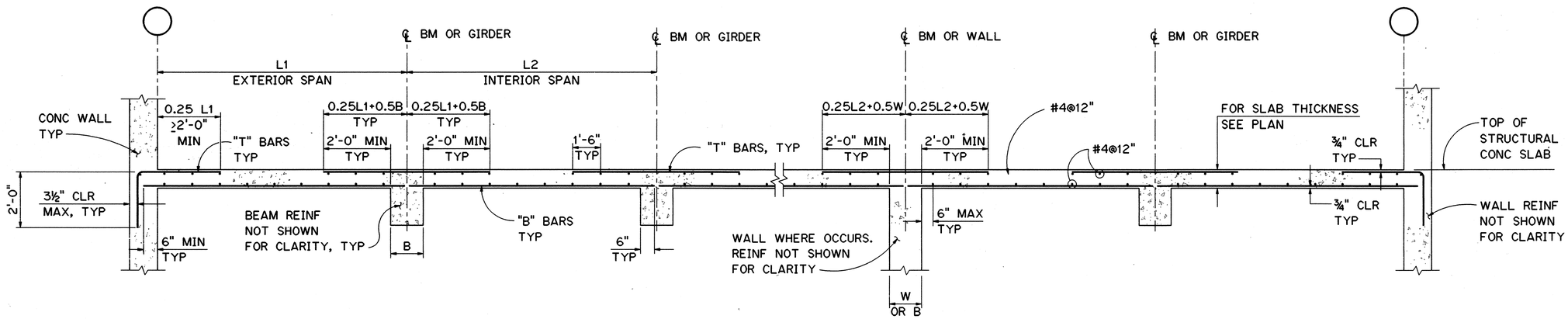

TYPICAL MULTISPAN SLAB REINFORCEMENT LAYOUT

NOTES:

1. FOR GENERAL STRUCTURAL NOTES, SEE SHT. NO. 1G12.
2. FOR SLAB REINFORCEMENT REQUIREMENTS, SEE FRAMING PLANS.

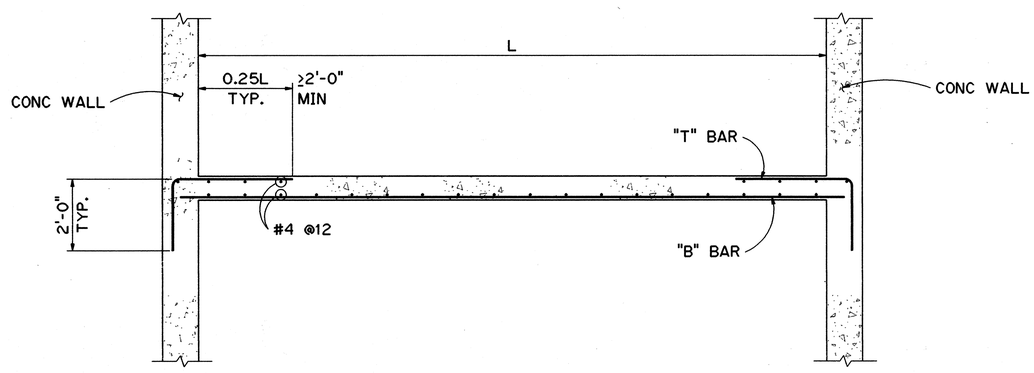

TYPICAL SINGLE SLAB REINFORCEMENT LAYOUT

ORIGINAL PLAN		DATE
	SURVEY PLOTTED BY F. M. CARZON	NOV 94
	DRAWN BY	
NOTE BOOK	TRACED BY	
	PLOTTED BY G. BERKOVICH	NOV 94
	DESIGNED BY	
	QUANTITIES BY	
NO.	CHECKED BY M. S. OW-YANG	DEC 94

PETER G. BIBBES LICENSED PROFESSIONAL ENGINEER No. 6467-S HAWAII, U.S.A.

THIS WORK WAS PREPARED BY ME OR UNDER MY SUPERVISION

DATE	REVISION

STATE OF HAWAII
DEPARTMENT OF TRANSPORTATION
HIGHWAYS DIVISION

TYPICAL SLAB REINFORCEMENT LAYOUT

TRAFFIC OPERATIONS CENTER EXPANSION
H-3 FINISH (UNIT III)
FAIP NO. I-H3-1(75), UNIT III
T.K. TUNNEL/ACCESS ROADS

SCALE: NOT TO SCALE DATE: JUN 1995

SHEET NO. 3S10 OF 22 SHEETS

CARZON ELWOOD::2410:[DWG.STRUCT]ST008.FGB71 25JAN95-13.16.00

FED. ROAD DIST. NO.	STATE	FED. AID PROJ. NO.	FISCAL YEAR	SHEET NO.	TOTAL SHEETS
HAWAII	HAW.	I-H3-1(75) UNIT III	1994	168	353

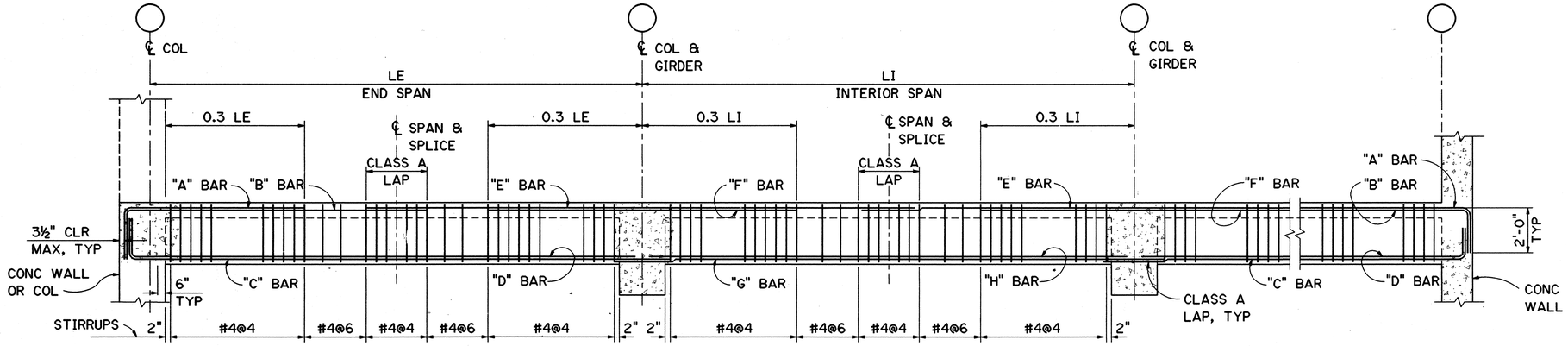

FOR FBx AND RBx

TYPICAL BEAM REINFORCEMENT LAYOUT

N.T.S.

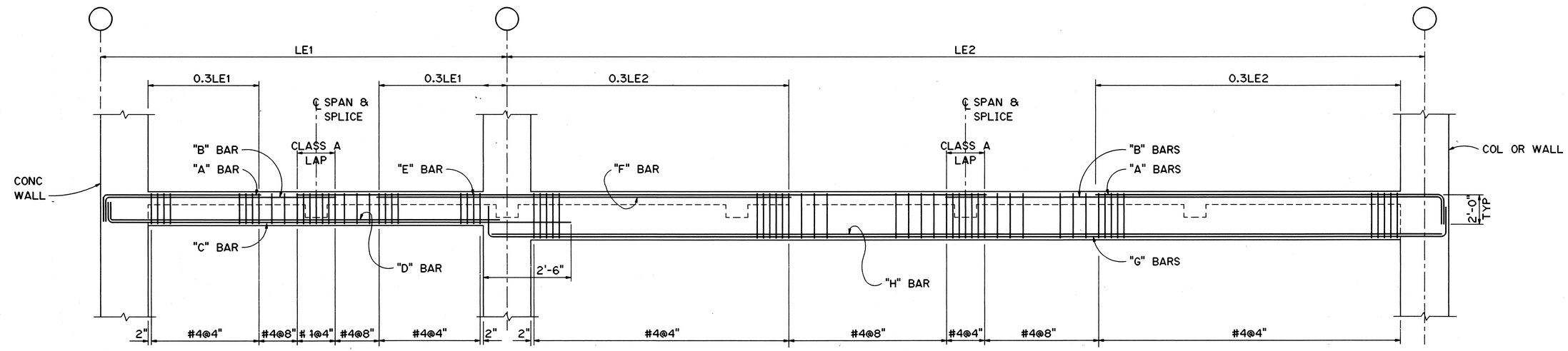

FOR FGx AND RGx

TYPICAL GIRDER REINFORCEMENT LAYOUT

N.T.S.

NOTES:

1. FOR GENERAL STRUCTURAL NOTES, SEE SHT. NO. 1G12.
2. FOR BEAM AND GIRDER LOCATIONS, SEE FRAMING PLANS SHT. NO'S 3S5 AND 3S6.

ORIGINAL PLAN		DATE
SURVEY PLOTTED BY	F. M. CARZON	NOV 94
DRAWN BY	" " "	"
TRACED BY	G. BEMKOVICH	NOV 94
DESIGNED BY	" " "	"
QUANTITIES BY	M. S. OWYANG	DEC 94
CHECKED BY	" " "	"
NOTE BOOK NO.		

DATE	REVISION

PETER G. BIBBES
LICENSED PROFESSIONAL ENGINEER
No. 6487-S
HAWAII, U.S.A.

THIS WORK WAS PREPARED BY ME OR UNDER MY SUPERVISION

STATE OF HAWAII
DEPARTMENT OF TRANSPORTATION
HIGHWAYS DIVISION

BEAM AND GIRDER REINFORCEMENT LAYOUT

TRAFFIC OPERATIONS CENTER EXPANSION
H-3 FINISH (UNIT III)
FAIP NO. I-H3-1(75), UNIT III
T.K. TUNNEL/ACCESS ROADS

SCALE: NOT TO SCALE DATE: JUN 1995

SHEET NO. 3S11 OF 22 SHEETS

CARZON ELWOOD::24TO:DWG.STRUCT\ST007.FGB\T 25JAN95-13.17.50

FED. ROAD DIST. NO.	STATE	FED. AID PROJ. NO.	FISCAL YEAR	SHEET NO.	TOTAL SHEETS
HAWAII	HAW.	I-H3-1(75) UNIT III	1994	169	353

BEAM AND GIRDER SCHEDULE

MARK	TYPE	BARS A	B	C	D	E	F	G	H	J	K	REMARKS
FB1	2	2-#8	2-#8	2-#8	2-#8	2-#8	2-#8					
FB2	2					2-#8	2-#8	2-#8	2-#8			
FB3	2	2-#8	2-#8	2-#8	2-#8	2-#10	2-#8					
FB4	2	2-#8	2-#8	2-#8	2-#8	2-#8	2-#8					
FB5	2	2-#8	2-#8	2-#8	2-#8	2-#8	2-#8					
FG1	3	2-#10	2-#10	2-#8	2-#8	2-#10	2-#10					
FG2	3	2-#10	2-#10			4-#8	4-#8	2-#8	2-#8			
FG3	5	2-#10	2-#10			4-#8	6-#8	4-#10	4-#10			
FG4												SEE SHEET NO. 3S16
FG5												SEE SHEET NO. 3S15
RB1	1	2-#6	2-#6	2-#8	1-#8	2-#6	2-#6					
RB2	1					2-#6	2-#6	2-#8	1-#8			
RB3	1	2-#6	2-#6	2-#8	1-#8	2-#6	2-#6					
RB4	1	2-#6	2-#6	2-#8	1-#8	2-#6	2-#6					
RB5	1	2-#6	4-#10	2-#8	1-#8	2-#6	2-#6					
RG1	3	2-#10	2-#10	2-#8	2-#8	2-#10	2-#10					
RG2	3	2-#10	2-#10			2-#10	2-#10	2-#8	2-#8			REINF LAYOUT SAME AS FOR TYPICAL BEAM REINFORCEMENT LAYOUT
RG3	4	2-#10	2-#10			2-#10	2-#10	2-#10	2-#10			
RB6	1	2-#8	2-#8	2-#10	1-#10	2-#10	2-#8					
BM1	6	4-#11	2-#11	2-#11	2-#11	2 #11	4-#11					
BM2	6	4-#11	2-#11	2-#11	2-#11	2-#11	4-#11					
BM3	-	2-#8	2-#8	9-#11	9-#11							SEE SECTION A SHT. NO. 3S9 FOR BEAM SIZE

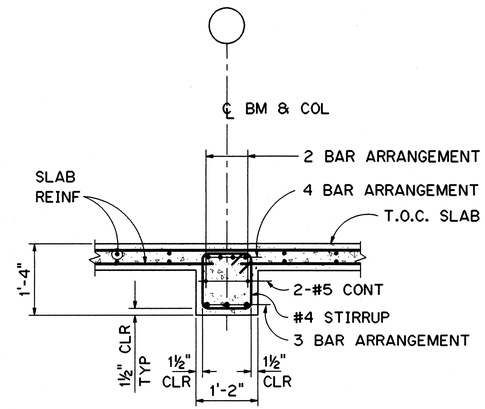

TYPE 1

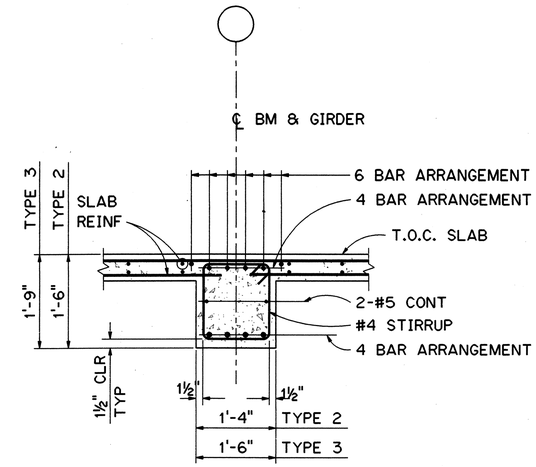

TYPE 2, TYPE 3

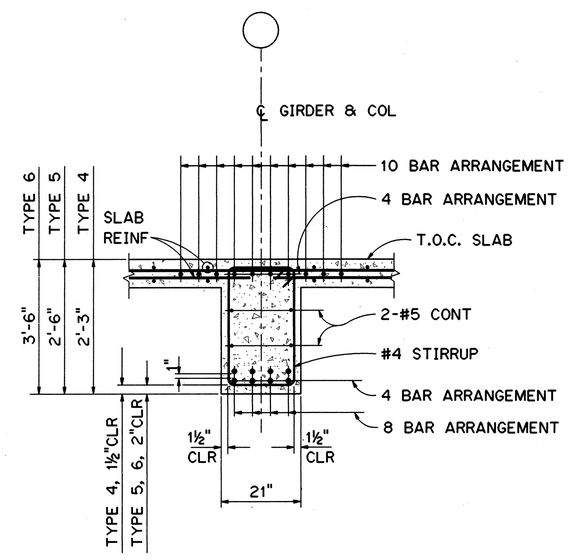

TYPE 4, TYPE 5, TYPE 6

NOTES

1. FOR GENERAL STRUCTURAL NOTES AND ABBREVIATIONS, SEE SHT NO. 1G12.
2. FOR BEAM AND GIRDER REINFORCEMENT LAYOUT, SEE SHT NO. 3S11.

GRAPHIC SCALE
12" 6" 0' 1' 2'
1" = 1'-0"

PETER G. BIGGES LICENSED PROFESSIONAL ENGINEER No. 6467-S HAWAII, U.S.A.

THIS WORK WAS PREPARED BY ME OR UNDER MY SUPERVISION

DATE	REVISION

STATE OF HAWAII
DEPARTMENT OF TRANSPORTATION
HIGHWAYS DIVISION

BEAM AND GIRDER REBAR SCHEDULE

TRAFFIC OPERATIONS CENTER EXPANSION
H-3 FINISH (UNIT III)
FAIP NO. I-H3-1(75), UNIT III
T.K. TUNNEL/ACCESS ROADS

SCALE: AS SHOWN DATE: JUN 1995

SHEET NO. 3S12 OF 22 SHEETS

ORIGINAL PLAN		DATE
	SURVEY PLOTTED BY F. M. CARZON	NOV 94
	DRAWN BY " "	"
	TRACED BY " "	"
NOTE BOOK	DESIGNED BY G. BIENKOVITCH	NOV 94
	QUANTITIES BY " "	"
NO.	CHECKED BY M. S. OWYANG	DEC 94

CARZON ELWOOD::2410:DWG.STRUCT3S10T0.FGB71 25JAN95-13.19.10

FED. ROAD DIST. NO.	STATE	FED. AID PROJ. NO.	FISCAL YEAR	SHEET NO.	TOTAL SHEETS
HAWAII	HAW.	I-H3-1(75) UNIT III	1994	170	353

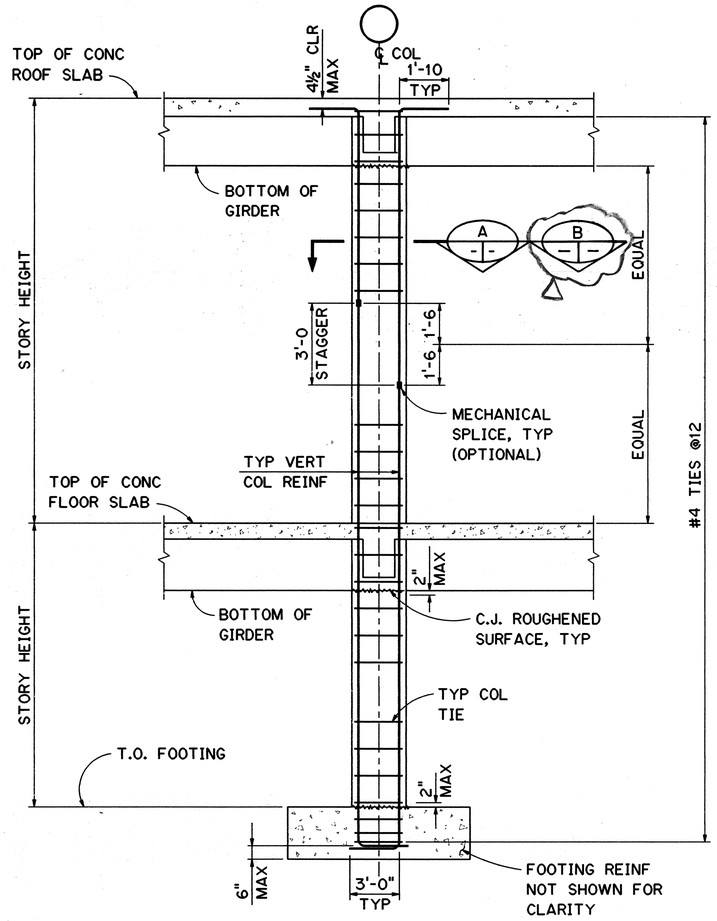

TYPICAL COLUMN/PILASTER ELEVATION

SCALE: ⅜" = 1'-0"

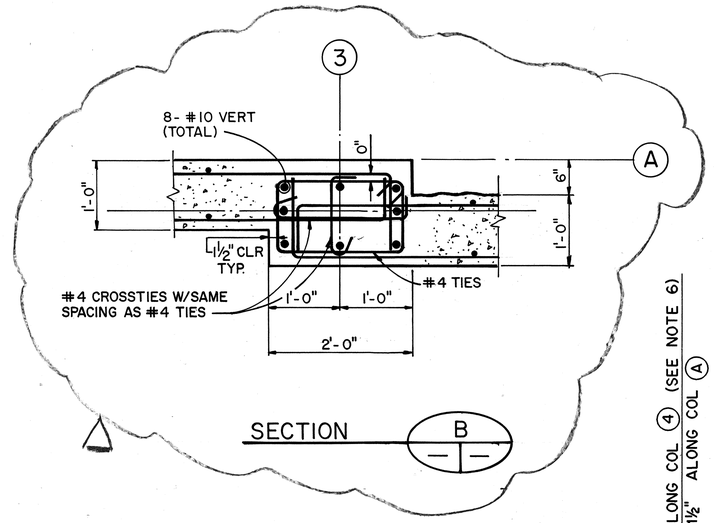

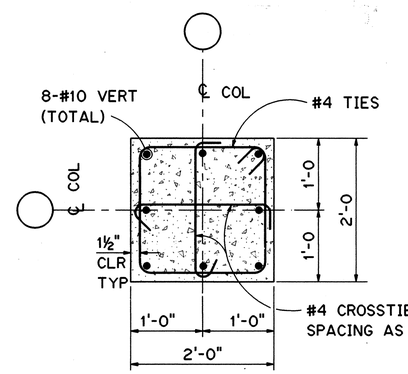

TYPICAL COLUMN

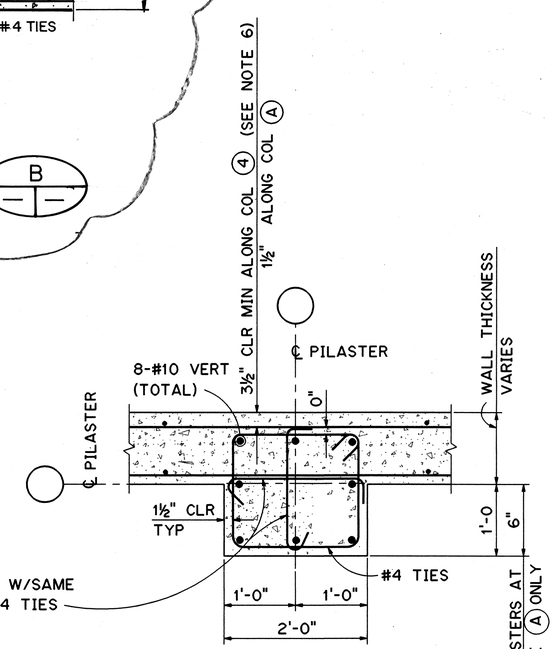

TYPICAL PILASTER

SECTION A

SCALE: 1" = 1'-0"

NOTES

1. FOR ABBREVIATIONS AND GENERAL STRUCTURAL NOTES, SEE SHT NO. 1G12.
2. LAP SPLICE OF VERTICAL REBARS IS NOT ALLOWED.
3. MECHANICAL SPLICES SHALL DEVELOP IN TENSION OR COMPRESSION AT LEAST 125 PERCENT OF THE SPECIFIED YIELD STRENGTH OF THE REINFORCEMENT.
4. SEE FOUNDATION PLAN, SHT NO. 3S2, FOR COLUMN OR PILASTER ORIENTATION.
5. FOR BEAM-COLUMN JOINT SECTIONS, SEE SHT NO. 3S21.
6. RANDOM BOARD TEXTURE NOT SHOWN FOR CLARITY. SEE ARCHITECTURAL SHEETS FOR LOCATIONS.

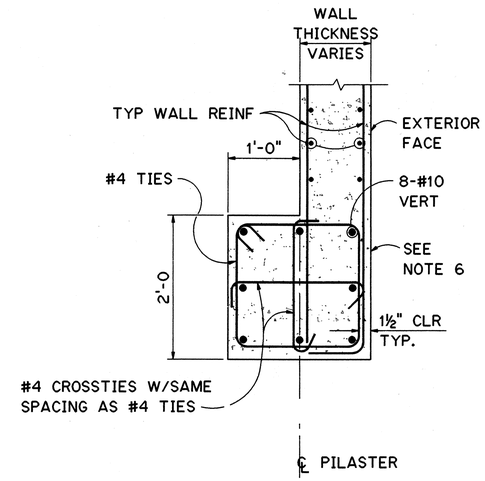

TYPICAL CORNER PILASTER

GRAPHIC SCALE

2' 0' 2' 4' 6'

⅜" = 1'-0"

1' 0' 1' 2'

1" = 1'-0"

PETER G. BIGGES LICENSED PROFESSIONAL ENGINEER No. 6467-S HAWAII, U.S.A.

THIS WORK WAS PREPARED BY ME OR UNDER MY SUPERVISION

DATE	REVISION
8/28/96	DCN75-008: ADDED SECTION B

STATE OF HAWAII
DEPARTMENT OF TRANSPORTATION
HIGHWAYS DIVISION

TYPICAL COLUMN REINFORCEMENT LAYOUT

TRAFFIC OPERATIONS CENTER EXPANSION
H-3 FINISH (UNIT III)
FAIP NO. I-H3-1(75), UNIT III
T.K. TUNNEL/ACCESS ROADS

SCALE: AS SHOWN DATE: JUN 1995

SHEET NO. 3S13 OF 22 SHEETS

ORIGINAL PLAN			
SURVEY PLOTTED BY	F. M. CARZON		DATE
DRAWN BY	"	"	NOV 94
TRACED BY	G. BENKOVICH	"	NOV 94
ISSUED BY	M. S. OWYANG	"	DEC 94
NOTE BOOK			
QUANTITIES BY			
NO.	CHECKED BY		

CARZON ELWOOD::2410:[DWG.STRUCT]ST009.FGB71 25JAN95-13.22.50

FED. ROAD DIST. NO.	STATE	FED. AID PROJ. NO.	FISCAL YEAR	SHEET NO.	TOTAL SHEETS
HAWAII	HAW.	I-H3-1(75) UNIT III	1994	171	353

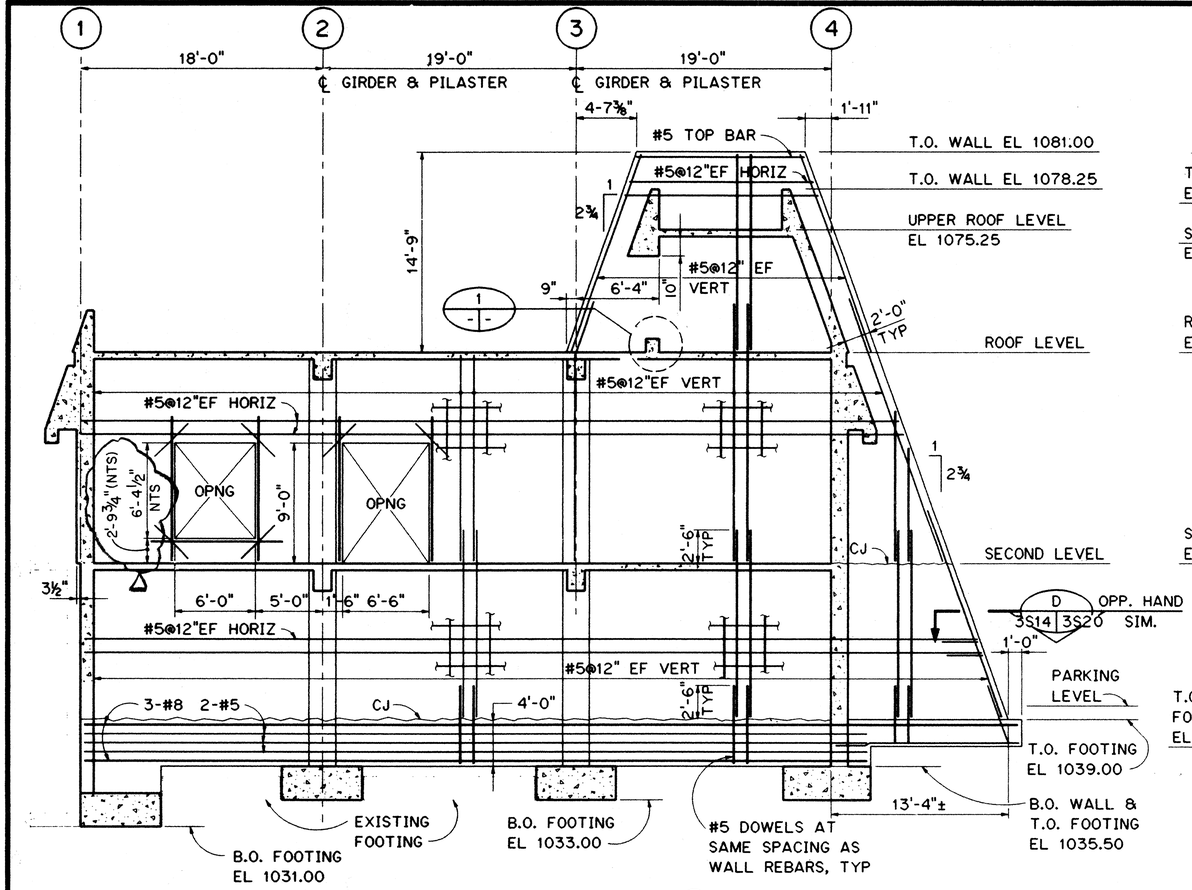

WALL ALONG COLUMN LINE (A)

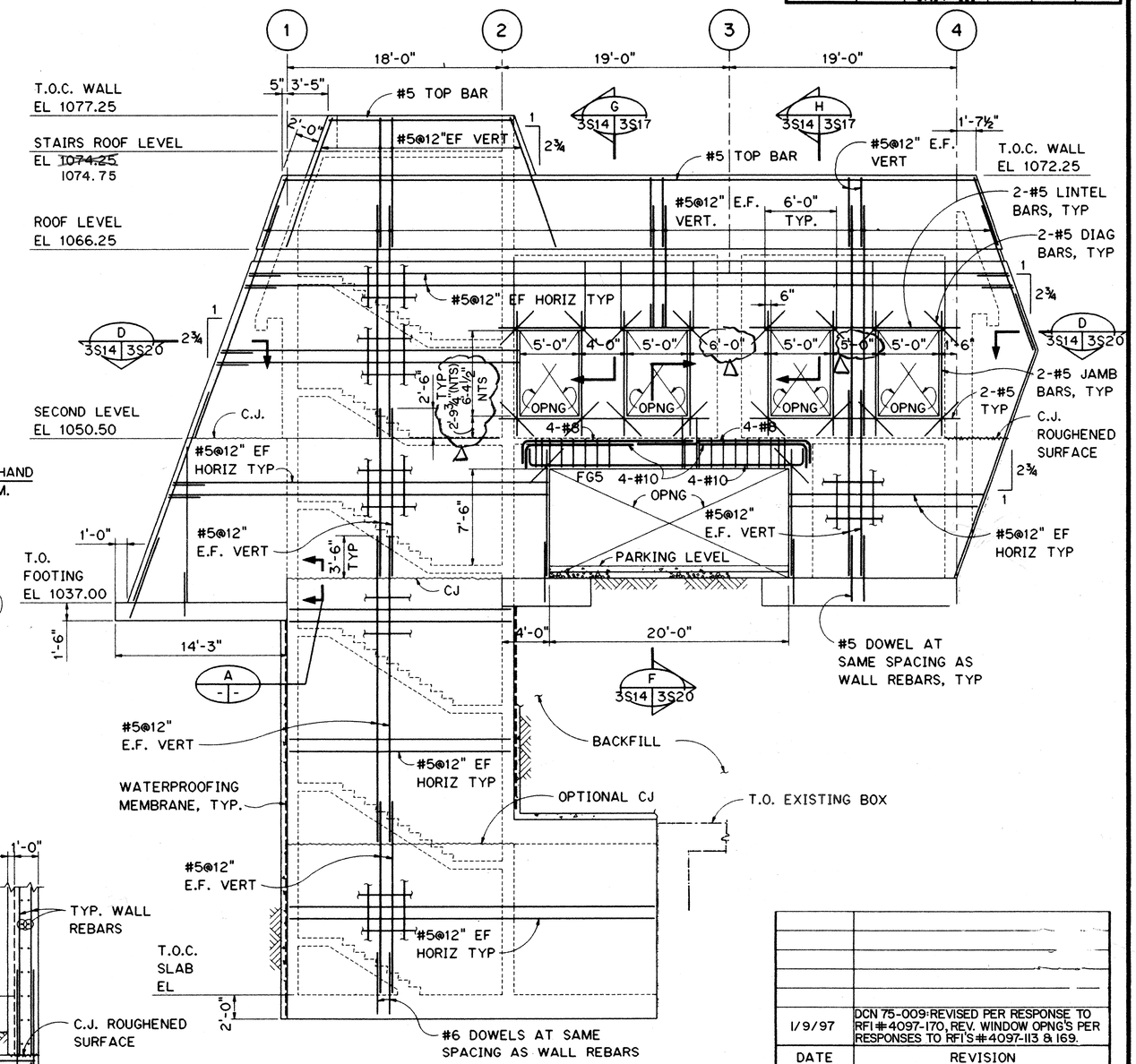

WALL ELLVATION ALONG COLUMN LINE (E)

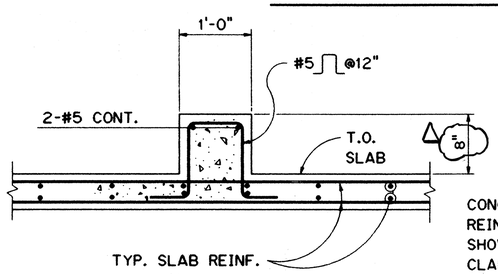

DETAIL 1
SCALE: 1" = 1'-0"

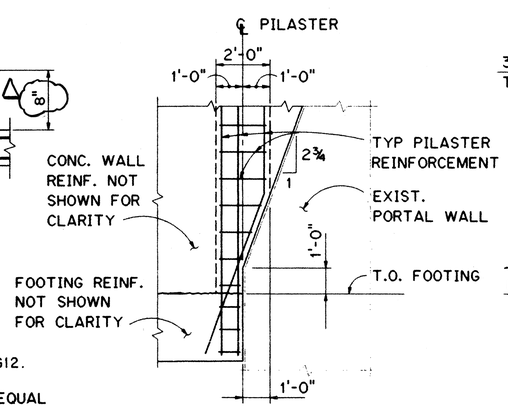

DETAIL 2
SCALE: ⅜" = 1'-0"

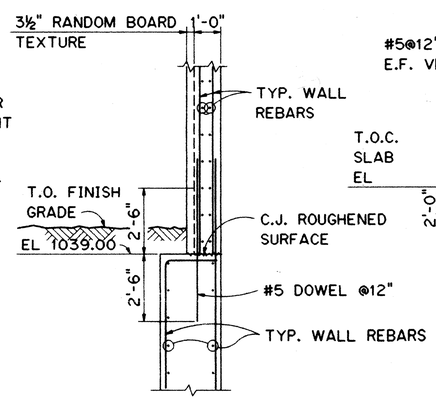

SECTION A
SCALE: ⅜" = 1'-0"

NOTES:

1. FOR GENERAL STRUCTURAL NOTES, SEE SHT NO. 1G12.
2. FOR REINFORCEMENT AT OPENING LESS THAN OR EQUAL TO 2'-0"x2'-0" IN DIMENSION, SEE SHT NO. 3S1.
3. FOR ADDITIONAL REINFORCEMENT AROUND OPENINGS GREATER THAN 2'-0"x2'-0", SEE SHT NO. 3S1.
4. ALL WALLS ARE BEARING WALLS, UNO.

GRAPHIC SCALE
4' 2' 0' 5' 10'
3/16" = 1'-0"

PETER G. BIBBES
LICENSED PROFESSIONAL ENGINEER
No. 6467-8
HAWAII, U.S.A.

THIS WORK WAS PREPARED BY ME OR UNDER MY SUPERVISION

DATE	REVISION
1/9/97	DCN 75-009:REVISED PER RESPONSE TO RFI#4097-170, REV. WINDOW OPNG'S PER RESPONSES TO RFI'S#4097-113 & 169.

STATE OF HAWAII
DEPARTMENT OF TRANSPORTATION
HIGHWAYS DIVISION

WALL ELEVATIONS ALONG COL. LINES A AND E

TRAFFIC OPERATIONS CENTER EXPANSION
H-3 FINISH (UNIT III)
FAIP NO. I-H3-1(75), UNIT III
T.K. TUNNEL/ACCESS ROADS

SCALE: ⅜" = 1'-0" DATE: JUN 1995

SHEET NO. 3S14 OF 22 SHEETS

SURVEY PLOTTED BY	F. M. CARZON	DATE
DRAWN BY	" "	NOV 94
TRACED BY	" "	NOV 94
DESIGNED BY	G. BENKOVICH	
QUANTITIES BY	" "	
CHECKED BY	M. S. ONYANG	DEC 94
ORIGINAL PLAN	NOTE BOOK	NO.

CARZON ELWOOD::2410:[DWG.STRUCT]S1013.FGB71 25JAN95-13.33.00

FED. ROAD DIST. NO.	STATE	FED. AID PROJ. NO.	FISCAL YEAR	SHEET NO.	TOTAL SHEETS
HAWAII	HAW.	I-H3-1(75) UNIT III	1994	172	353

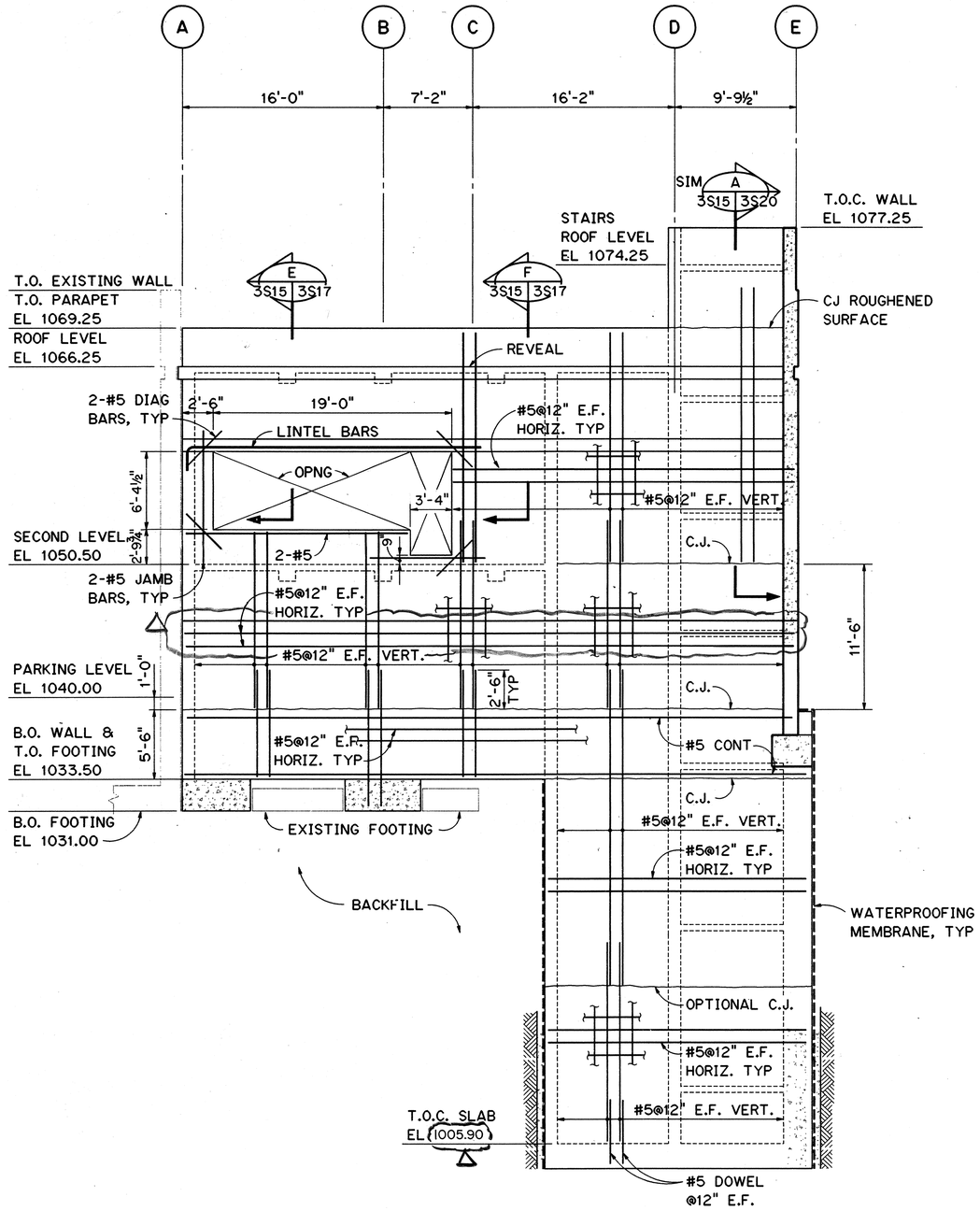

WALL ELEVATION ALONG COLUMN LINE ①

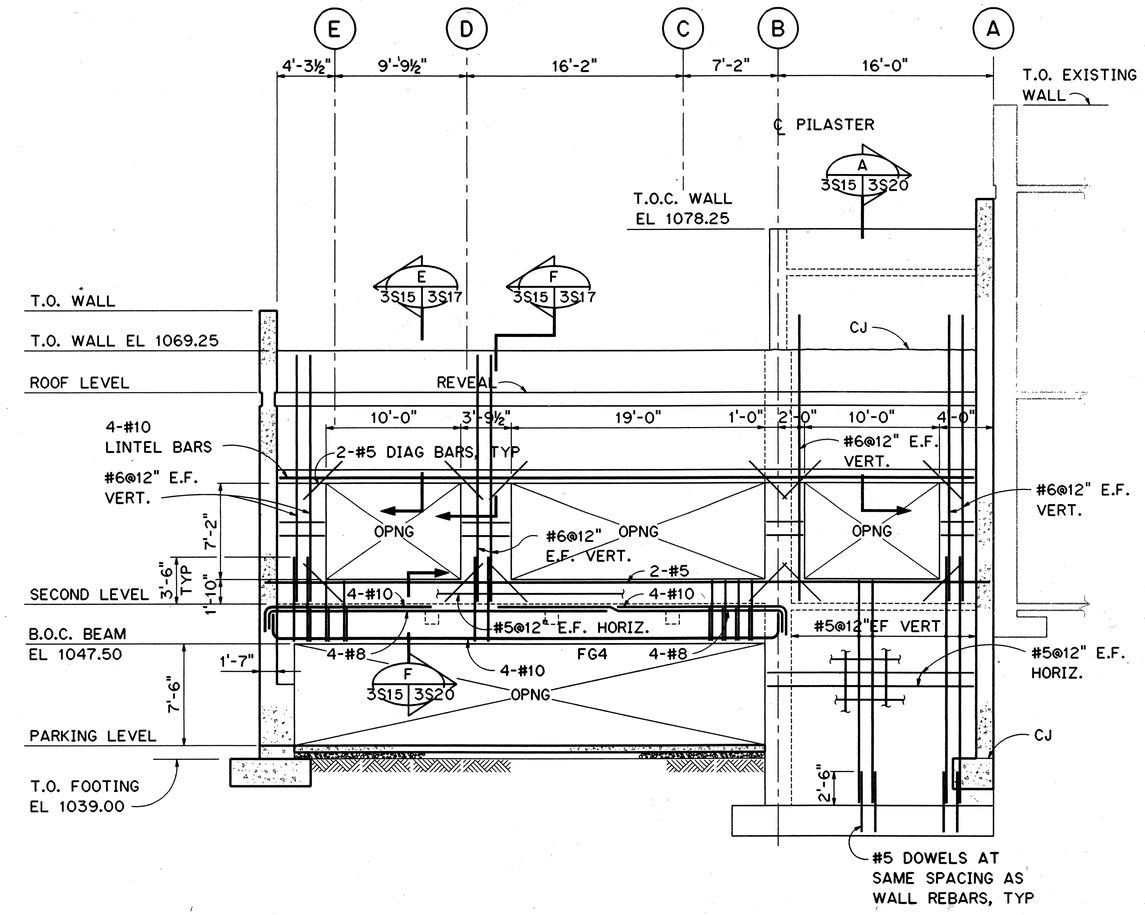

WALL ALONG COLUMN LINE ④

NOTES:

1. FOR GENERAL STRUCTURAL NOTES, SEE SHT NO. 1G12.
2. FOR REINFORCEMENT AT OPENING LESS THAN OR EQUAL TO 2'-0"x2'-0" IN DIMENSION, SEE SHT NO. 3S1.
3. FOR ADDITIONAL REINFORCEMENT AROUND OPENINGS GREATER THAN 2'-0"x2'-0", SEE SHT NO. 3S1.
4. ALL WALLS ARE BEARING WALLS, UNO.

GRAPHIC SCALE

4' 0' 4' 8' 12'

3/16" = 1'-0"

PETER G. BIGGS
LICENSED PROFESSIONAL ENGINEER
No. 6487-8
HAWAII, U.S.A.

THIS WORK WAS PREPARED BY ME OR UNDER MY SUPERVISION

DATE	REVISION
6/26/96	DCN 75-003: INDICATED OFFSET IN WALL ALONG COL. LINE 1 AT EL. 1046.00 AND LOWER LEVEL T.O.C. SLAB EL.
6/12/96	DCN 75-005: REVISED DOOR AND WINDOW OPENING PER RESPONSE TO RFI NO.51.

STATE OF HAWAII
DEPARTMENT OF TRANSPORTATION
HIGHWAYS DIVISION

WALL ELEVATIONS ALONG COL. LINES 1 AND 4

TRAFFIC OPERATIONS CENTER EXPANSION
H-3 FINISH (UNIT III)
FAIP NO. I-H3-1(75), UNIT III
T.K. TUNNEL/ACCESS ROADS

SCALE: 3/16"=1'-0" DATE: JUN 1995

SHEET NO. 3S15 OF 22 SHEETS

		DATE
ORIGINAL PLAN	SURVEY PLOTTED BY	
	DRAWN BY F. M. CARZON	NOV '94
NOTE BOOK	TRACED BY	
	DESIGNED BY G. BERKOVICH	NOV '94
NO.	QUANTITIES BY	
	CHECKED BY M. S. OWYANG	DEC '94

CARZON ELWOOD::2410:DWG.STRUCT\STOTT.FGB71 25JAN95-13:37:20

FED. ROAD DIST. NO.	STATE	FED. AID PROJ. NO.	FISCAL YEAR	SHEET NO.	TOTAL SHEETS
HAWAII	HAW.	I-H3-1(75) UNIT III	1994	173	353

NOTES:

1. FOR GENERAL STRUCTURAL NOTES, SEE SHT NO. 1G12.
2. FOR REINFOREMENT AT OPENING LESS THAN OR EQUAL TO 2'-0"X2'-0", SEE SHT NO. 3S1.
3. FOR ADDITIONAL REINFORCEMENT AROUND OPENINGS GREATER THAN 2'-0"x2'-0", SEE SHT NO. 3S1.
4. ALL WALLS ARE BEARING WALLS, UNO.

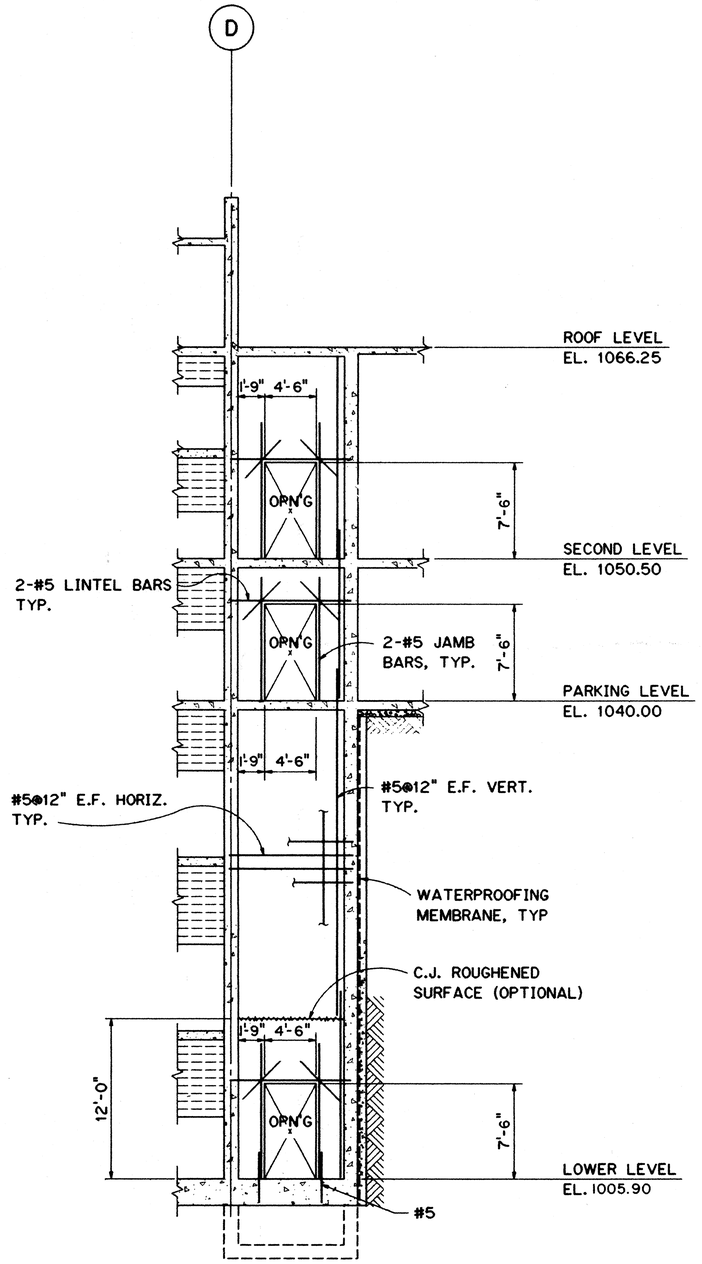

WALL ELEVATION BETWEEN COL. LINES ① & ②
AT ELEVATOR
SCALE: 3/16" = 1'-0"

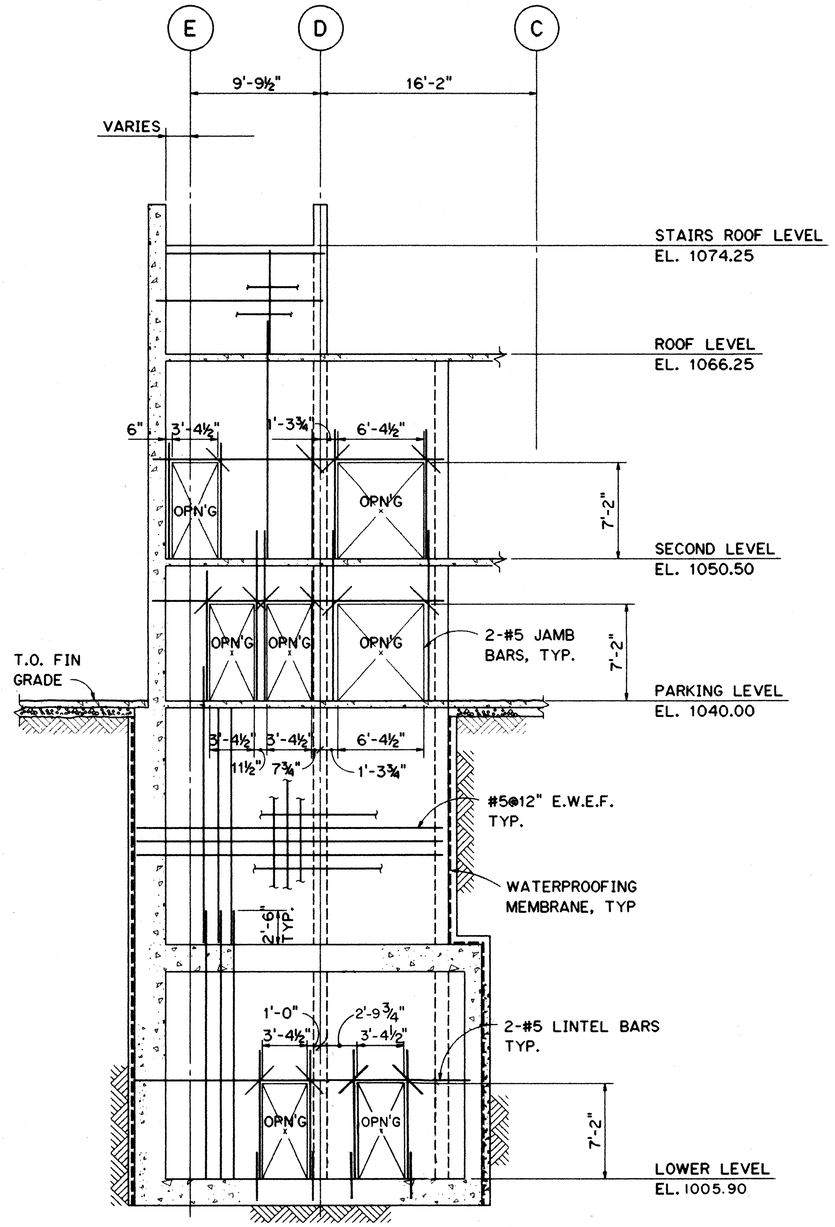

WALL ELEVATION ALONG COL. LINE ②
SCALE: 3/16" = 1'-0"

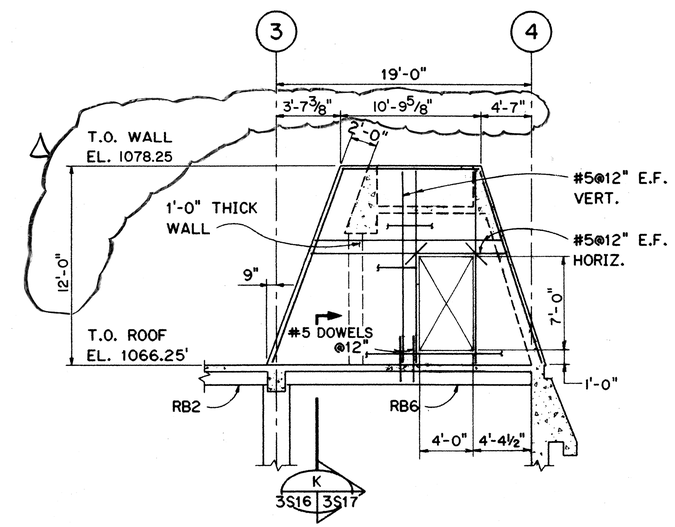

WALL ALONG COL. LINE Ⓑ
SCALE: 3/16" = 1'-0"

DATE	REVISION
1/9/97	DCN 75-009: REVISED PER RESPONSE TO RFI # 4097-170
8/28/96	DCN 75-008: REV. DOOR OPN'G AT EL. 1005.90 PER RESPONSE TO RFI # 4097-63
10/13/95	ADDENDUM 1

STATE OF HAWAII
DEPARTMENT OF TRANSPORTATION
HIGHWAYS DIVISION

WALL ELEVATION ALONG COL. LINE 2 AND AT ELEVATOR

TRAFFIC OPERATIONS CENTER EXPANSION
H-3 FINISH (UNIT III)
FAIP NO. I-H3-1(75), UNIT III
T.K. TUNNEL/ACCESS ROADS

SCALE: 3/16" = 1'-0" DATE: JUN 1995

SHEET NO. 3S16 OF 22 SHEETS

ADD. 173

		DATE
SURVEY PLOTTED BY	T. M. CARZON	NOV 94
SURVEY BY	" " "	
TRACED BY	T. M. CARZON	NOV 94
DESIGNED BY	G. BENKOVICH	
QUANTITIES BY	" " "	
CHECKED BY	M. S. OWYANG	DEC 94
ORIGINAL PLAN		
NOTE BOOK		
NO.		

GRAPHIC SCALE
4' 0' 4' 8' 12'
3/16" = 1'-0"

PETER G. BIBBES
LICENSED PROFESSIONAL ENGINEER
No. 6467-S
HAWAII, U.S.A.

THIS WORK WAS PREPARED BY ME OR UNDER MY SUPERVISION

CARZON ELWOOD::2410:[DWG.STRUCT]3S1031.FG871 30JAN95-09.52.50

FED. ROAD DIST. NO.	STATE	FED. AID PROJ. NO.	FISCAL YEAR	SHEET NO.	TOTAL SHEETS
HAWAII	HAW.	I-H3-1(75) UNIT III	1994	174	353

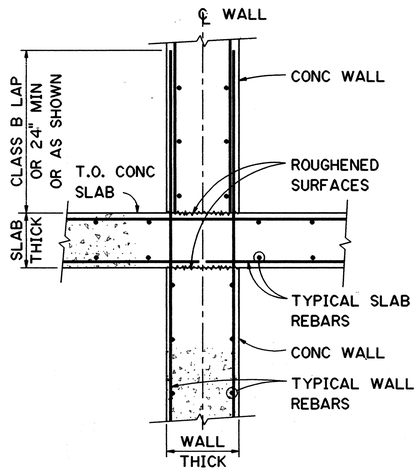

TYPICAL INTERIOR WALL TO FLOOR SLAB CONNECTION DETAIL

SECTION A / - | 3S17
NOT TO SCALE

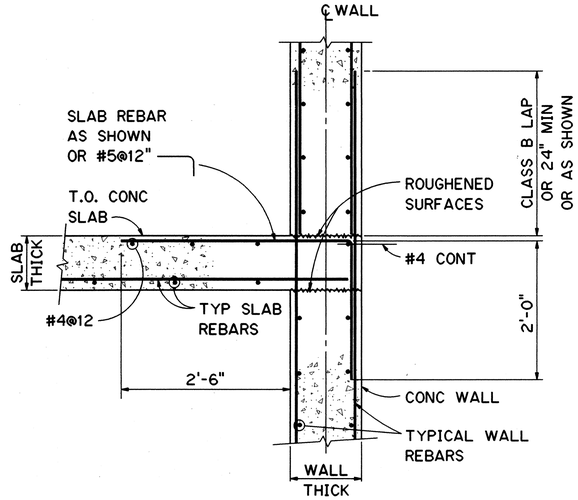

TYPICAL EXTERIOR WALL TO SLAB CONNECTION

SECTION B / 3S6 | 3S17 / 3S6
NOT TO SCALE

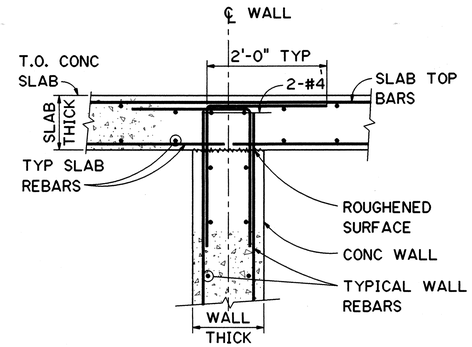

TYPICAL INTERIOR WALL TO SLAB CONNECTION AT OPENING OR ROOF

SECTION C / - | 3S17
NOT TO SCALE

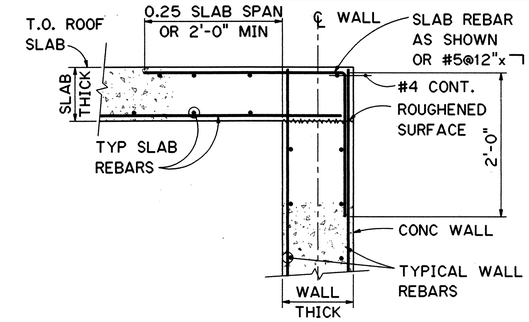

TYPICAL WALL TO ROOF SLAB CONNECTION DETAIL

SECTION D / 3S6 | 3S17
NOT TO SCALE

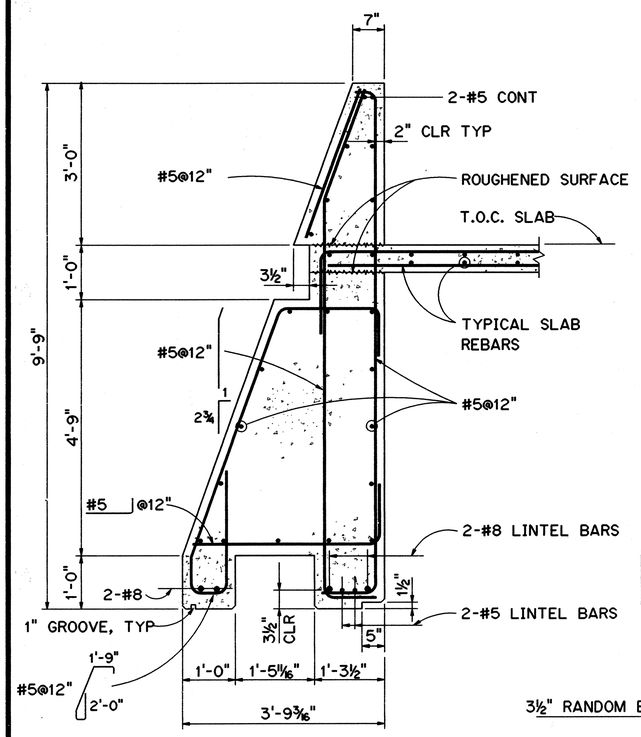

SECTION E
SCALE: 3/4"=1'-0"
3S14 | 3S17 / 3S15

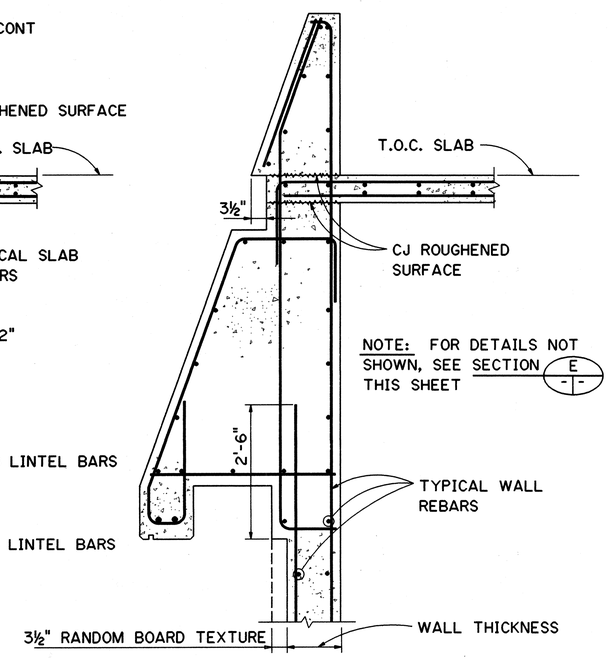

NOTE: FOR DETAILS NOT SHOWN, SEE SECTION E / - | -
THIS SHEET

SECTION F
SCALE: 3/4"=1'-0"
3S6 | 3S17 / 3S14 / 3S15

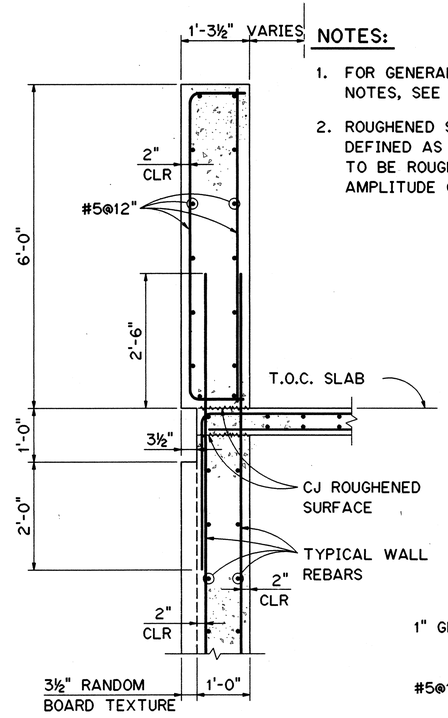

SECTION G
SCALE: 3/4"=1'-0"
3S14 | 3S17

NOTES:

1. FOR GENERAL STRUCTURAL NOTES, SEE SHT NO. 1G12.
2. ROUGHENED SURFACE DEFINED AS INTERFACE TO BE ROUGHENED TO AN AMPLITUDE OF ¼" MINIMUM.

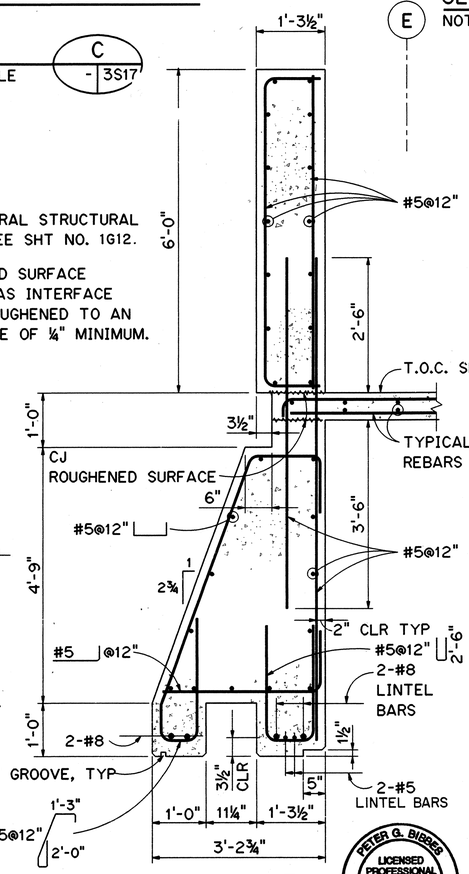

SECTION H
SCALE: 3/4"=1'-0"
3S14 | 3S17

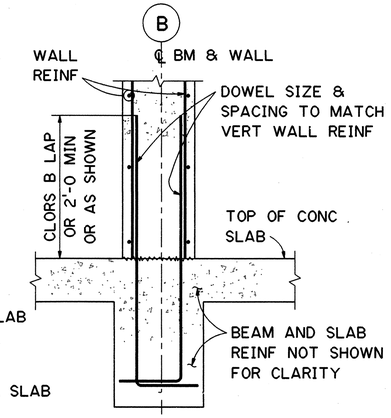

TYPICAL WALL TO FLOOR SLAB CONNECTION

SECTION K / 3S6 | 3S17 / 3S16
NOT TO SCALE

GRAPHIC SCALE
1' 0' 1' 2' 3'
¾" = 1'-0"

PETER G. BIBBES LICENSED PROFESSIONAL ENGINEER No. 6467-S HAWAII, U.S.A.

THIS WORK WAS PREPARED BY ME OR UNDER MY SUPERVISION

DATE	REVISION

STATE OF HAWAII
DEPARTMENT OF TRANSPORTATION
HIGHWAYS DIVISION

SECTIONS AND DETAILS

TRAFFIC OPERATIONS CENTER EXPANSION
H-3 FINISH (UNIT III)
FAIP NO. I-H3-1(75), UNIT III
T.K. TUNNEL/ACCESS ROADS

SCALE: AS NOTED DATE: JUN 1995

SHEET NO. 3S17 OF 22 SHEETS

ORIGINAL PLAN		DATE
	SURVEY PLOTTED BY	
	DRAWN BY	F. M. CARZON NOV 94
	TRACED BY	" "
	TYPED BY	" "
NOTE BOOK	DESIGNED BY	G. BENKOVICH NOV 94
	QUANTITIES BY	" "
NO.	CHECKED BY	M. S. OWYANG DEC 94

CARZON ELWOOD::2410:[DWG.STRUCT]ST012.FGB71 25JAN95-13.52.00

FED. ROAD DIST. NO.	STATE	FED. AID PROJ. NO.	FISCAL YEAR	SHEET NO.	TOTAL SHEETS
HAWAII	HAW.	I-H3-1(75) UNIT III	1994	175	353

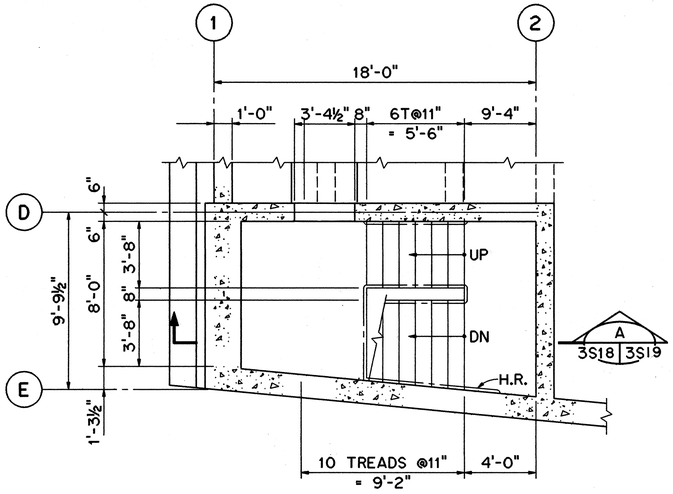

PLAN AT ROOF LEVEL
SCALE: 1/4" = 1'-0"

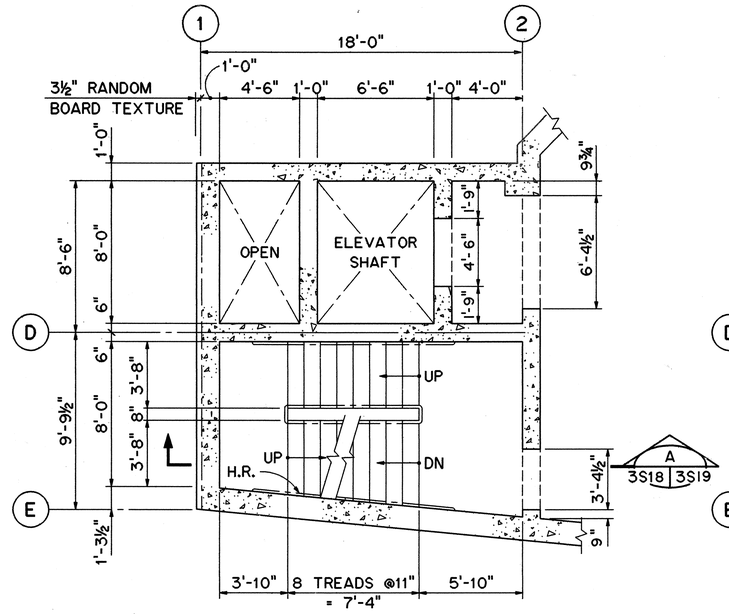

PLAN AT SECOND LEVEL
SCALE: 1/4" = 1'-0"

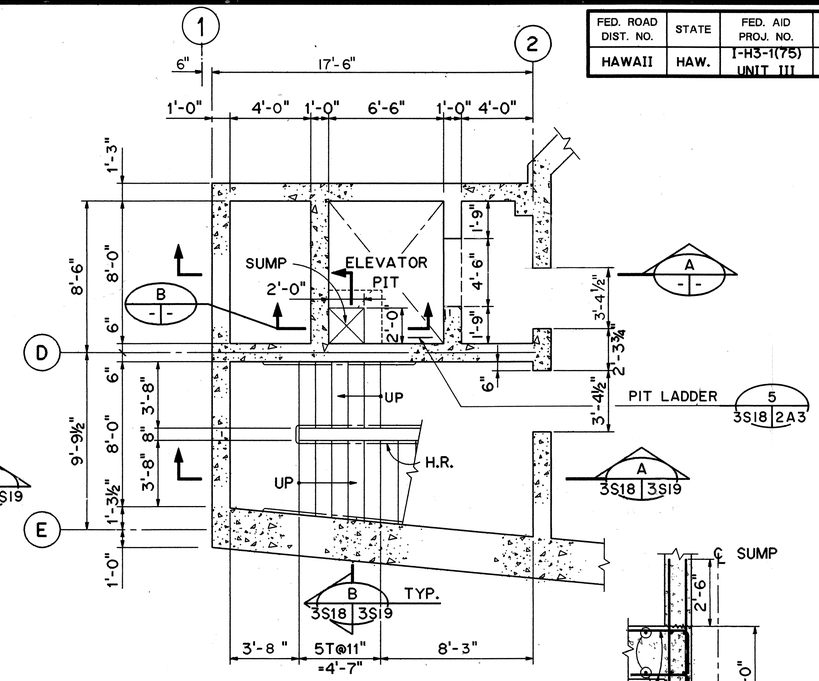

PLAN AT LOWER LEVEL
SCALE: 1/4" = 1'-0"

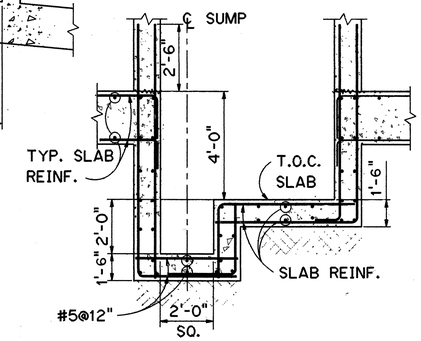

SECTION B
SCALE: ⅜" = 1'-0"

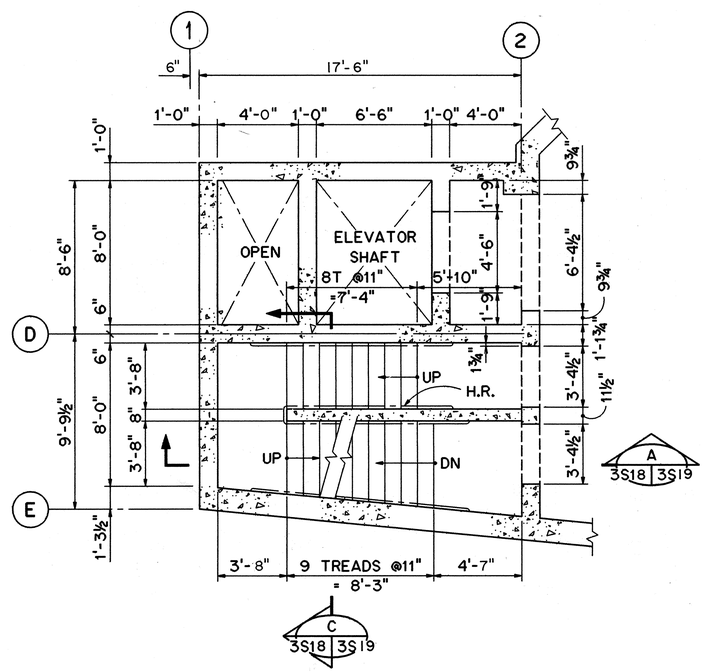

PLAN AT PARKING LEVEL
SCALE: 1/4" = 1'-0"

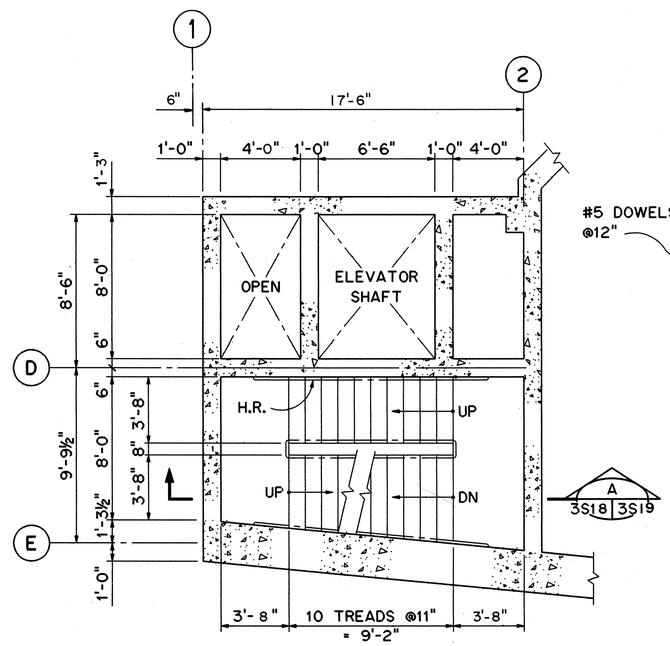

BETWEEN LOWER AND PARKING LEVEL
SCALE: 1/4" = 1'-0"

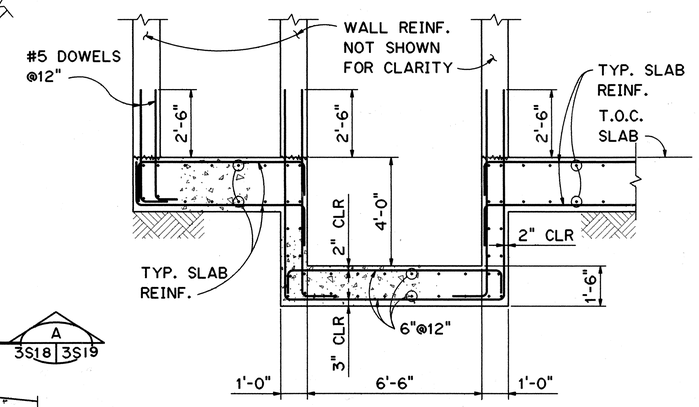

SECTION A
SCALE: ⅜" = 1'-0"
3S8 3S18

NOTES:

1. FOR GENERAL STRUCTURAL NOTES, SEE SHT. NO. 1G12.

DATE	REVISION
6/28/96	DCN 75-003: REVISED STAIR LANDINGS TO REFLECT 6" OFFSET ALONG COL. LINE 1; INCORP. RESPONSE TO RFI NO. 4097-38
10/13/95	ADDENDUM 1

PETER G. BIGGESS
LICENSED PROFESSIONAL ENGINEER
No. 6467-S
HAWAII, U.S.A.

THIS WORK WAS PREPARED BY ME OR UNDER MY SUPERVISION

STATE OF HAWAII
DEPARTMENT OF TRANSPORTATION
HIGHWAYS DIVISION

STAIR PLANS

TRAFFIC OPERATIONS CENTER EXPANSION
H-3 FINISH (UNIT III)
FAIP NO. I-H3-1(75), UNIT III
T.K. TUNNEL/ACCESS ROADS

SCALE: ¼" = 1'-0" DATE: JUN 1995

SHEET NO. 3S18 OF 22 SHEETS

ORIGINAL PLAN			
NOTE BOOK	SURVEY PLOTTED BY	F.M. CARZON	NOV 94
	DRAWN BY	"	NOV 94
	TRACED BY	"	NOV 94
	DESIGNED BY	G. BENKOVICH	NOV 94
	QUANTITIES BY	"	DEC 94
NO.	CHECKED BY	M.S. OWYANG	"

CARZON ELWOOD::2410:DWG.STRUCT\ST028.FGB71 30JAN95-10.46.30

ADD. 175

FED. ROAD DIST. NO.	STATE	FED. AID PROJ. NO.	FISCAL YEAR	SHEET NO.	TOTAL SHEETS
HAWAII	HAW.	I-H3-1(75) UNIT III	1994	176	353

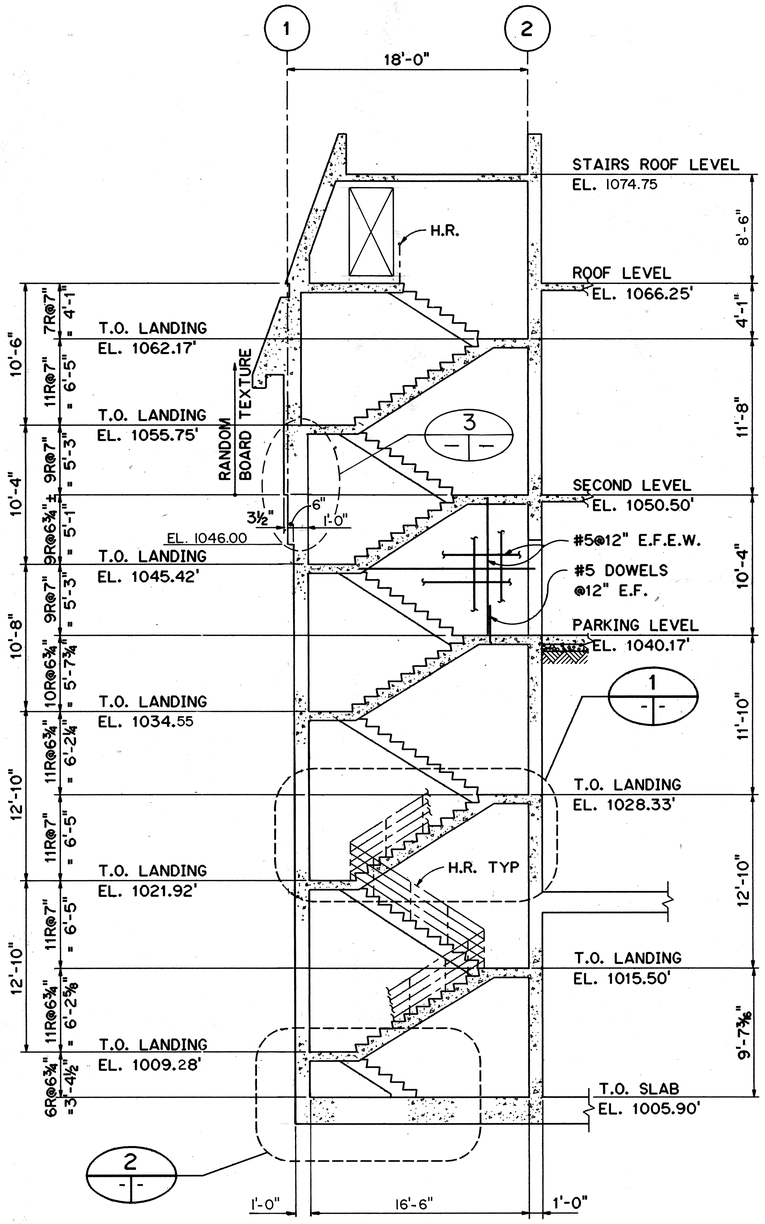

SECTION A
SCALE: 3/16" = 1'-0" 3S18 3S19

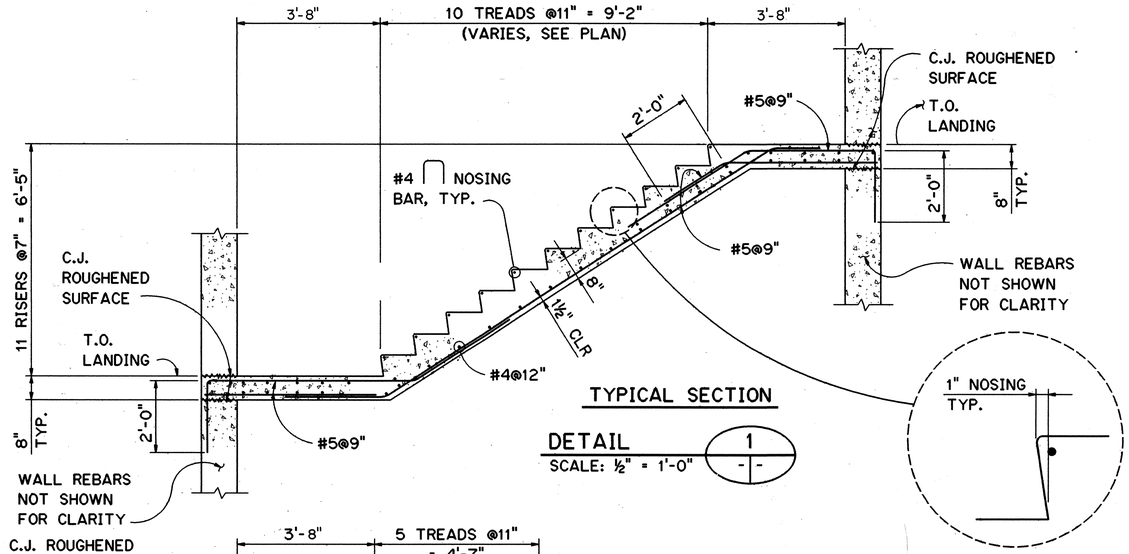

TYPICAL SECTION

DETAIL 1
SCALE: ½" = 1'-0"

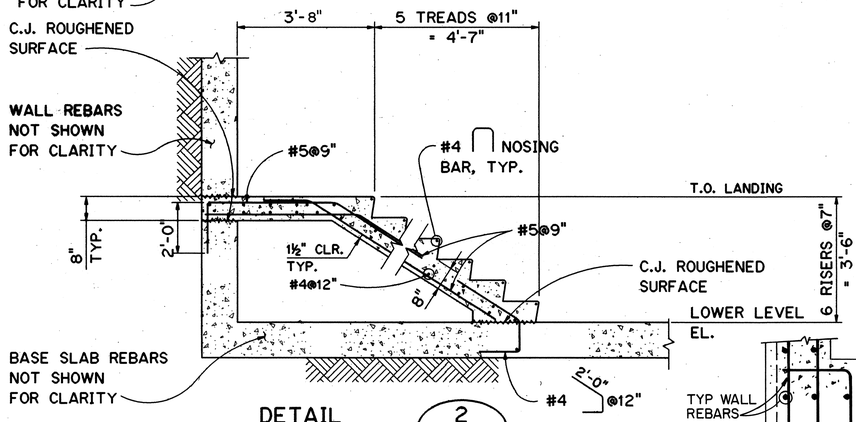

DETAIL 2
SCALE: ½" = 1'-0"

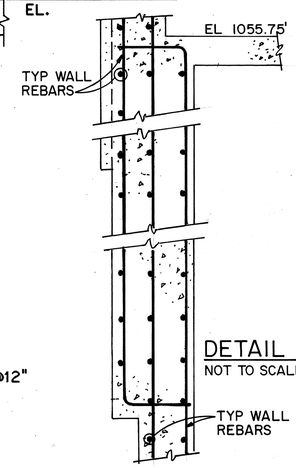

DETAIL 3
NOT TO SCALE

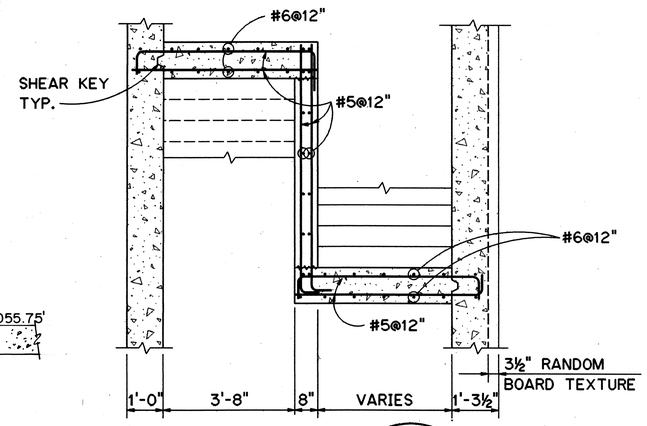

SECTION C
SCALE: ½" = 1'-0" 3S18 3S19

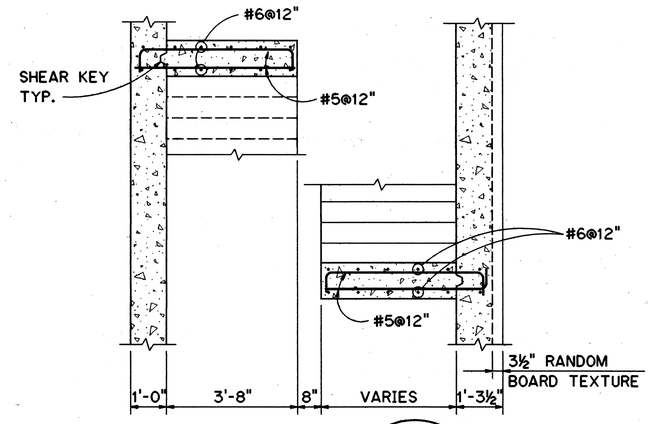

SECTION B
SCALE: ½" = 1'-0" 3S18 3S19

NOTES:

1. FOR GENERAL STRUCTURAL NOTES, SEE SHT. NO. 1G12.
2. FOR STANDARD STRUCTURAL DETAILS, SEE SHT. NO. 3S1.
3. FOR HANDRAIL DETAILS, SEE ARCHITECTURAL DRAWINGS.

GRAPHIC SCALE
½" = 1'-0"
3/16" = 1'-0"

PETER G. BIBBES
LICENSED PROFESSIONAL ENGINEER
No. 6467-S
HAWAII, U.S.A.

THIS WORK WAS PREPARED BY ME OR UNDER MY SUPERVISION

DATE	REVISION
8/28/96	DCN75-008: ADDED DETAIL 3
6/28/96	DCN75-003: REVISED STAIR LANDINGS TO FIT 6" OFFSET ALONG COL LINE I.
10/13/95	ADDENDUM 1

STATE OF HAWAII
DEPARTMENT OF TRANSPORTATION
HIGHWAYS DIVISION

STAIR SECTIONS AND DETAILS

TRAFFIC OPERATIONS CENTER EXPANSION
H-3 FINISH (UNIT III)
FAIP NO. I-H3-1(75), UNIT III
T.K. TUNNEL/ACCESS ROADS

SCALE: AS NOTED DATE: JUN 1995

SHEET NO. 3S19 OF 22 SHEETS

ORIGINAL PLAN	SURVEY PLOTTED BY		DATE
	DRAWN BY	F.M. CARZON	NOV 94
	TRACED BY		
NOTE BOOK	DESIGNED BY	G. BENKOVICH	NOV 94
	QUANTITIES BY		
NO.	CHECKED BY	M.S. OWYANG	DEC 94

CARZON ELWOOD::2410:DWG.STRUCT3S1022.FGB71 30JAN95-13.08.10

ADD. 176

FED. ROAD DIST. NO.	STATE	FED. AID PROJ. NO.	FISCAL YEAR	SHEET NO.	TOTAL SHEETS
HAWAII	HAW.	I-H3-1(75) UNIT III	1994	177	353

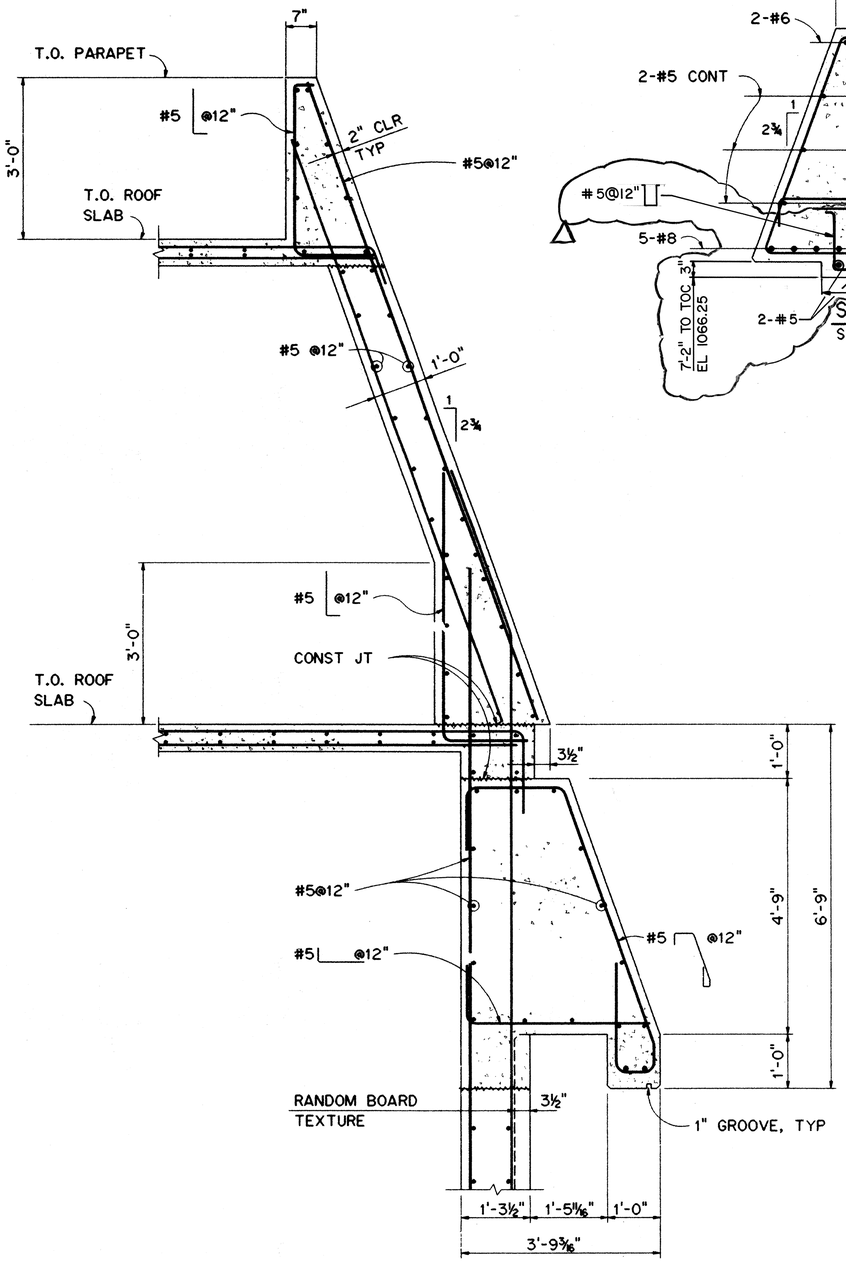

SECTION A
SCALE: 3/4" = 1'-0" 3S6 3S20 3S14 3S15

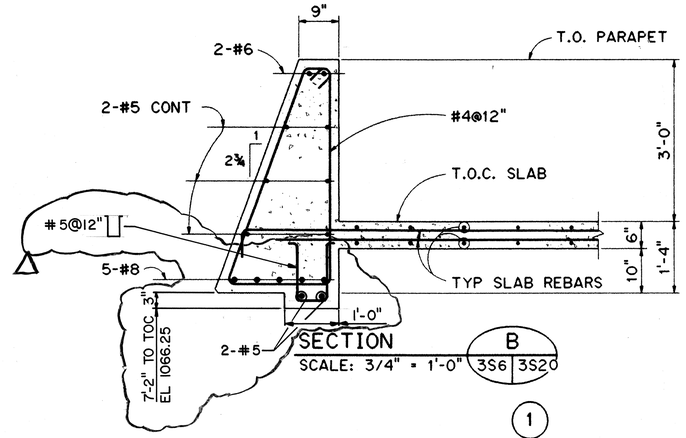

SECTION B
SCALE: 3/4" = 1'-0" 3S6 3S20

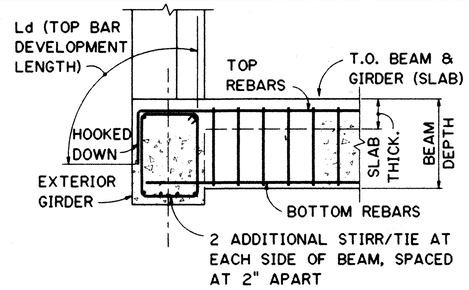

TYPICAL BEAM TO EDGE GIRDER CONNECTION

SECTION C
NO SCALE 3S5 3S20

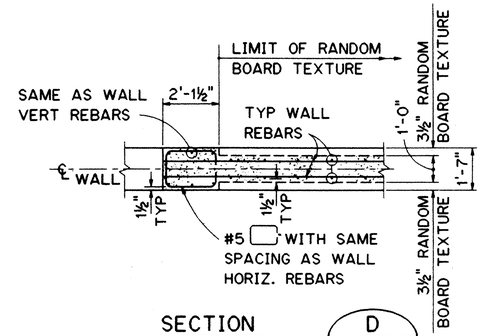

SECTION D
SCALE: 3/8 = 1'-0" 3S14 3S20

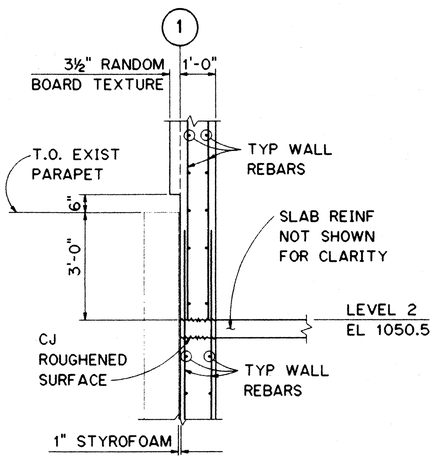

SECTION E
SCALE: 1/2 = 1'-0" 3S4 3S20

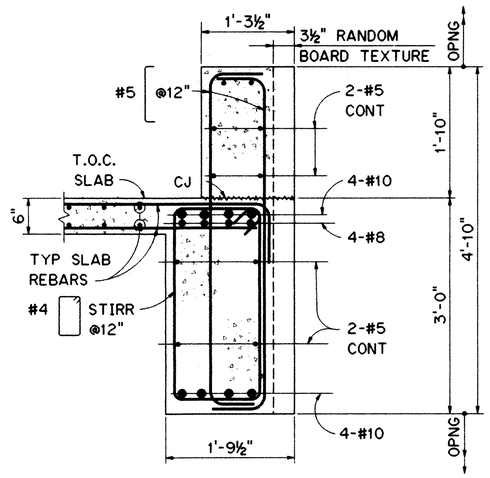

SECTION F
SCALE: 1" = 1'-0" 3S5 3S20 3S14 3S15

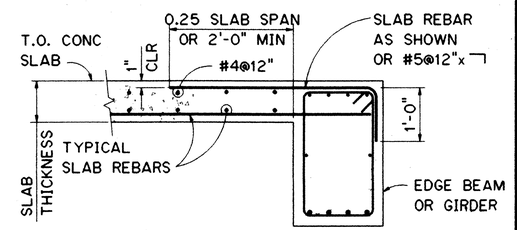

TYPICAL CONCRETE SLAB TO EDGE BEAM CONNECTION

SECTION G
NO SCALE - 3S20

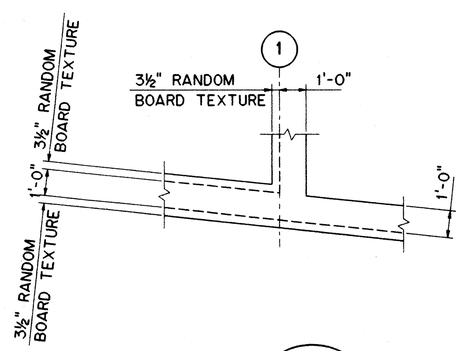

DETAIL 1
SCALE: ⅜" = 1'-0" 3S5 3S20 3S6

NOTES:

1. FOR GENERAL STRUCTURAL NOTES SEE SHT NO. 1G12.

GRAPHIC SCALE
1' 0' 1' 2' 3'
¾" = 1'-0"

PETER G. BIBBES LICENSED PROFESSIONAL ENGINEER No. 6467-S HAWAII, U.S.A.

THIS WORK WAS PREPARED BY ME OR UNDER MY SUPERVISION

DATE	REVISION
1/9/97	DCN 75-009: REVISED PER RESPONSE TO RFI #4097-170

STATE OF HAWAII
DEPARTMENT OF TRANSPORTATION
HIGHWAYS DIVISION

SECTIONS AND DETAILS

TRAFFIC OPERATIONS CENTER EXPANSION
H-3 FINISH (UNIT III)
FAIP NO. I-H3-1(75), UNIT III
T.K. TUNNEL/ACCESS ROADS

SCALE: AS SHOWN DATE: JUN 1995

SHEET NO. 3S20 OF 22 SHEETS

ORIGINAL PLAN		DATE
SURVEY PLOTTED BY	F. M. CARZON	NOV 94
DRAWN BY		NOV 94
TRACED BY	L. BENKOVICH	NOV 94
DESIGNED BY		
QUANTITIES BY		
CHECKED BY	K. S. ONYANG	DEC 94
NOTE BOOK		
NO.		

CARZON ELWOOD::2410:[DWG.STRUCT]3ST021.FGB/T 25JAN95-14:03:00

FED. ROAD DIST. NO.	STATE	FED. AID PROJ. NO.	FISCAL YEAR	SHEET NO.	TOTAL SHEETS
HAWAII	HAW.	I-H3-1(75) UNIT III	1994	178	353

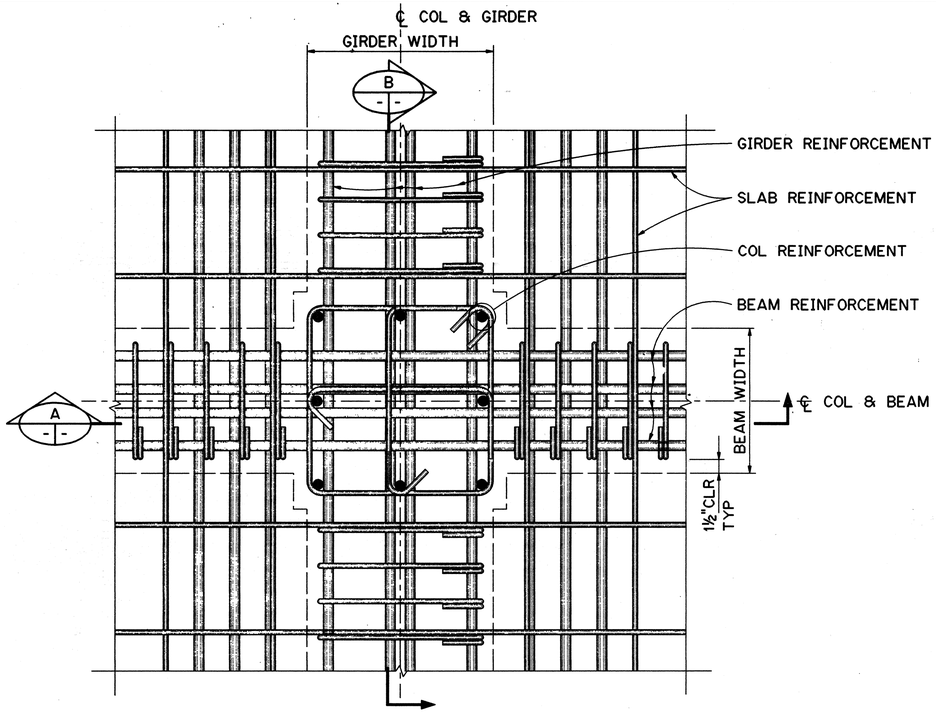

ARRANGEMENT OF TOP REINFORCEMENT

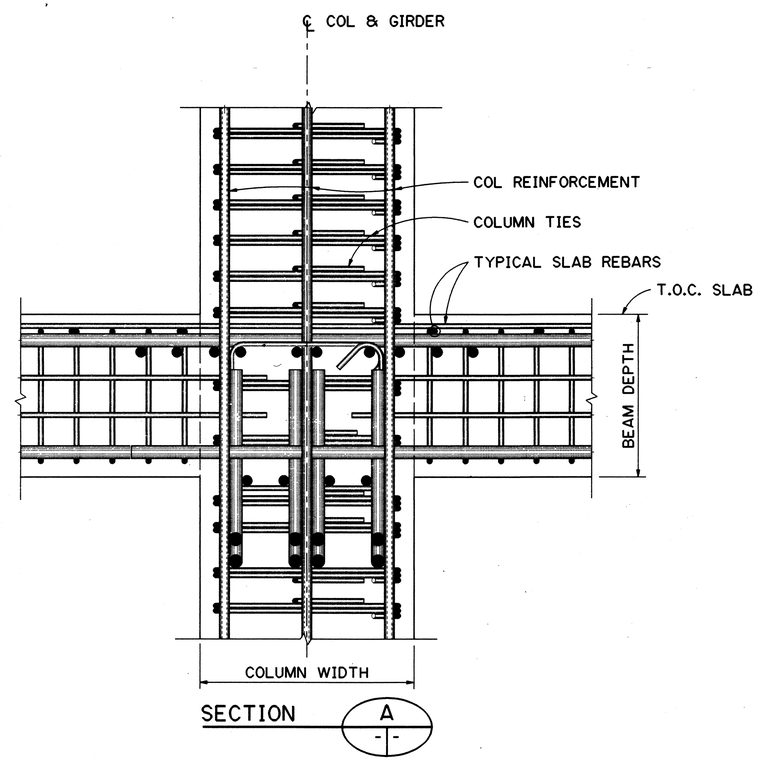

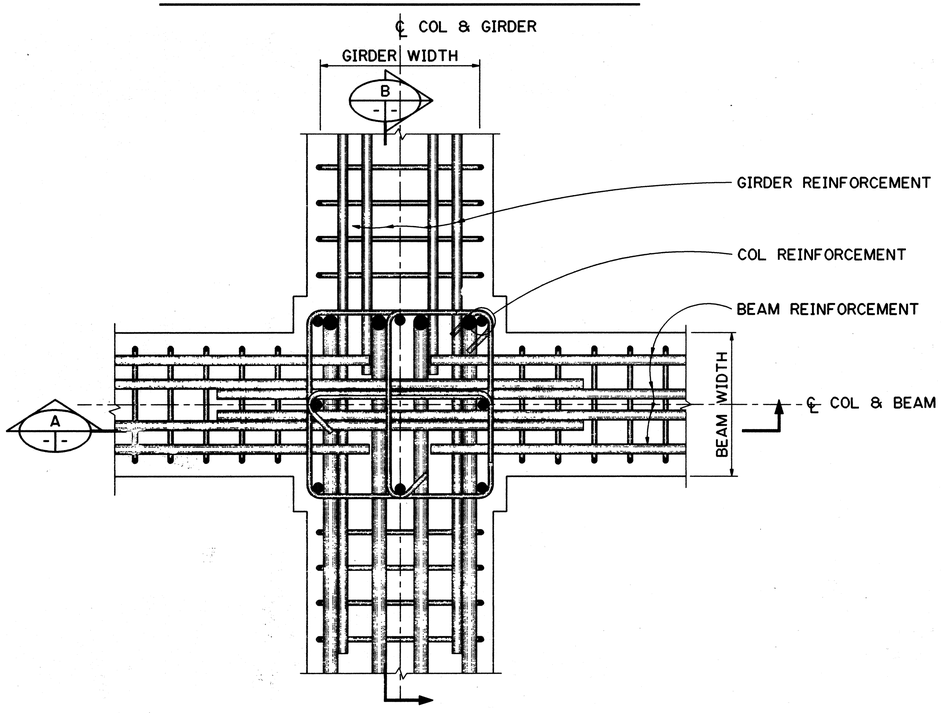

ARRANGEMENT OF BOTTOM REINFORCEMENT

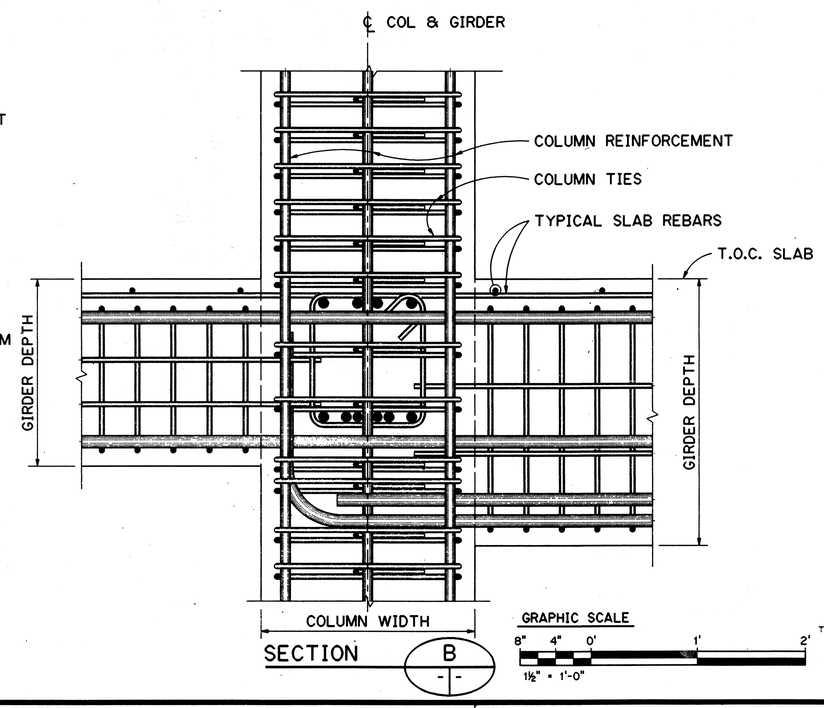

NOTES:

1. FOR GENERAL STRUCTURAL NOTES, SEE SHT NO. 1G12.
2. FOR BEAM AND GIRDER REINFORCEMENT LAYOUT, SEE SHT NO. 3S11.
3. FOR BEAM AND GIRDER REBAR SCHEDULE, SEE SHT NO. 3S12.

GRAPHIC SCALE
8" 4" 0' 1' 2'
1½" = 1'-0"

THIS WORK WAS PREPARED BY ME OR UNDER MY SUPERVISION

PETER G. BIBBES LICENSED PROFESSIONAL ENGINEER No. 6467-S HAWAII, U.S.A.

DATE	REVISION

STATE OF HAWAII
DEPARTMENT OF TRANSPORTATION
HIGHWAYS DIVISION

BEAM-COLUMN JOINT DETAIL

TRAFFIC OPERATIONS CENTER EXPANSION
H-3 FINISH (UNIT III)
FAIP NO. I-H3-1(75), UNIT III
T.K. TUNNEL/ACCESS ROADS

SCALE: 1½" = 1'-0" DATE: JUN 1995

SHEET NO. 3S21 OF 22 SHEETS

ORIGINAL PLAN		SURVEY PLOTTED BY		DATE
		DRAWN BY	AKORBMACHER	NOV 94
		TRACED BY	" " "	" " "
NOTE BOOK		DESIGNED BY	G. BENKOVITCH	NOV 94
		ESTIMATED BY	" " "	" " "
NO.		QUANTITIES BY		
		CHECKED BY	M. S. OWYANG	DEC 94

CARZON ELWOOD::2410:DWG.STRUCT\JST014.FGB71 25JAN95-14.05.20

FED. ROAD DIST. NO.	STATE	FED. AID PROJ. NO.	FISCAL YEAR	SHEET NO.	TOTAL SHEETS
HAWAII	HAW.	I-H3-1(75) UNIT III	1994	179	353

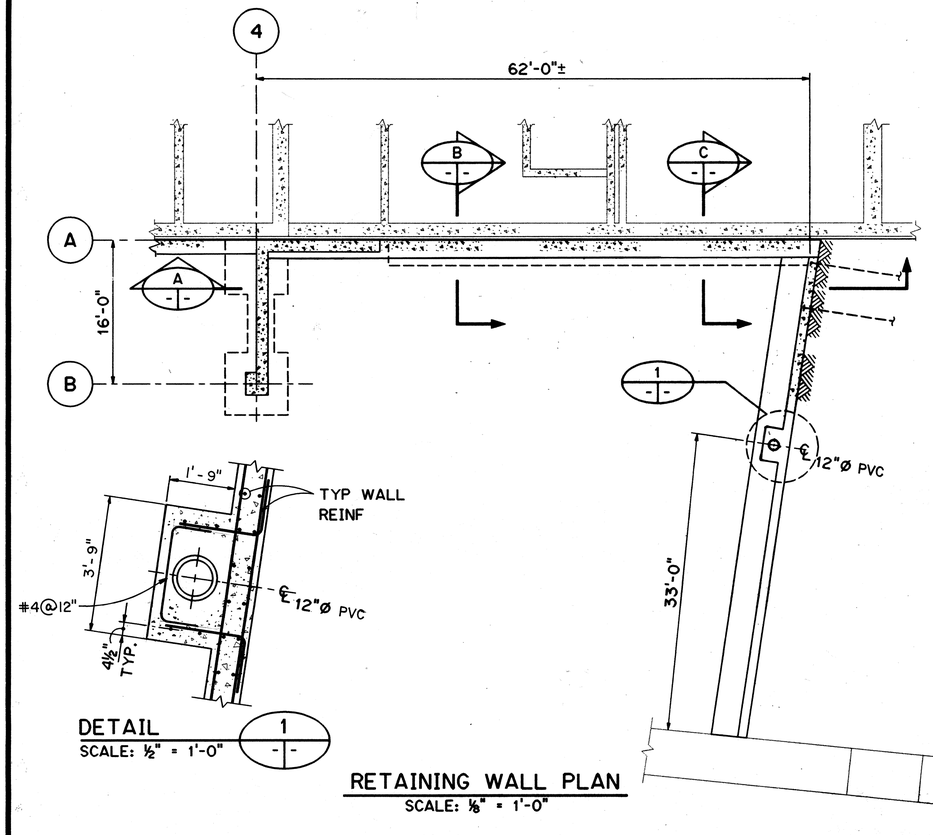

RETAINING WALL PLAN
SCALE: 1/8" = 1'-0"

DETAIL 1
SCALE: 1/2" = 1'-0"

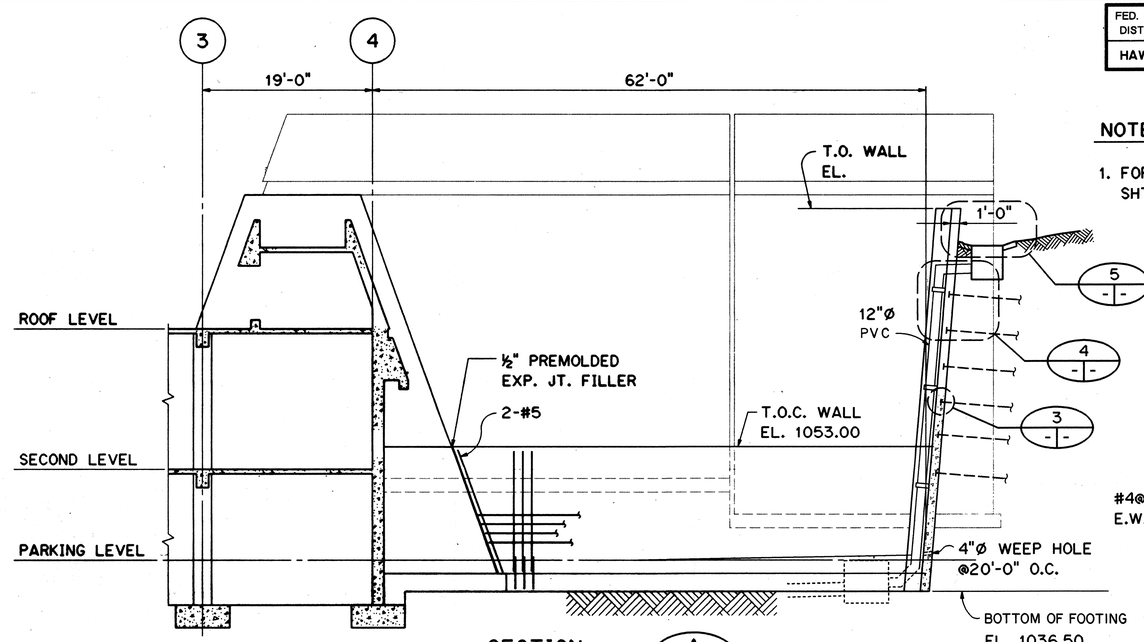

SECTION A
SCALE: 1/8" = 1'-0"

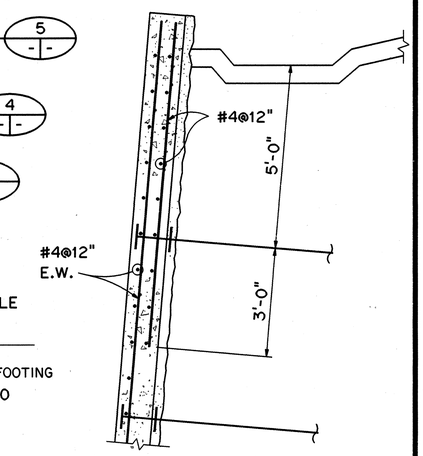

DETAIL 5
SCALE: 1/2" = 1'-0"

NOTES:

1. FOR GENERAL STRUCTURAL NOTES, SEE SHT. NO. 1G12.

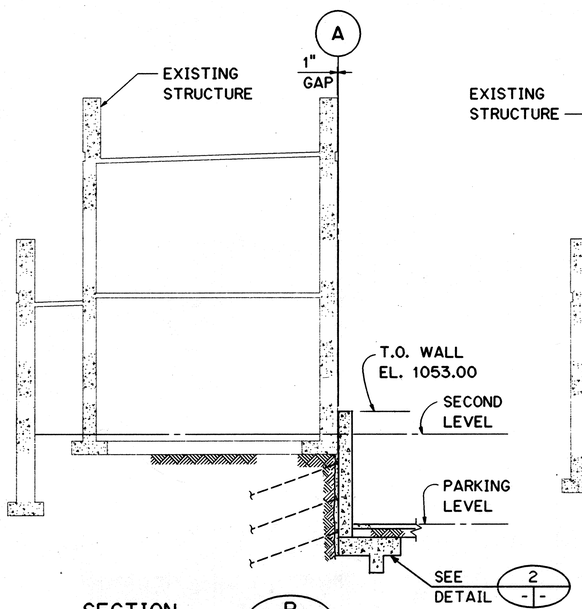

SECTION B
SCALE: 1/8" = 1'-0"

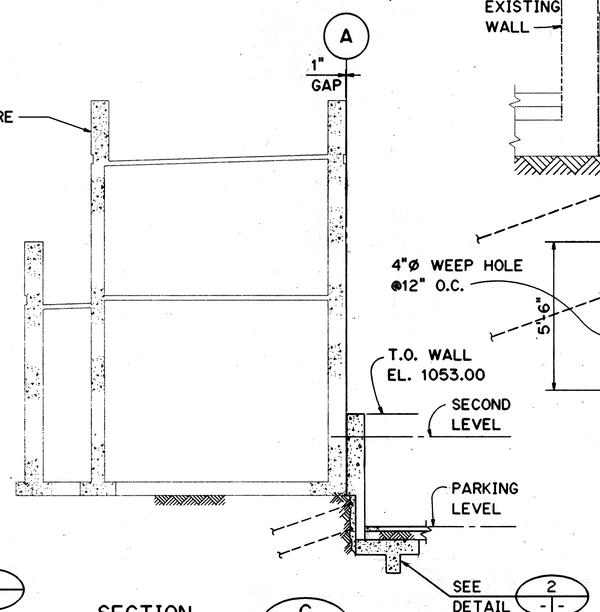

SECTION C
SCALE: 1/8" = 1'-0"

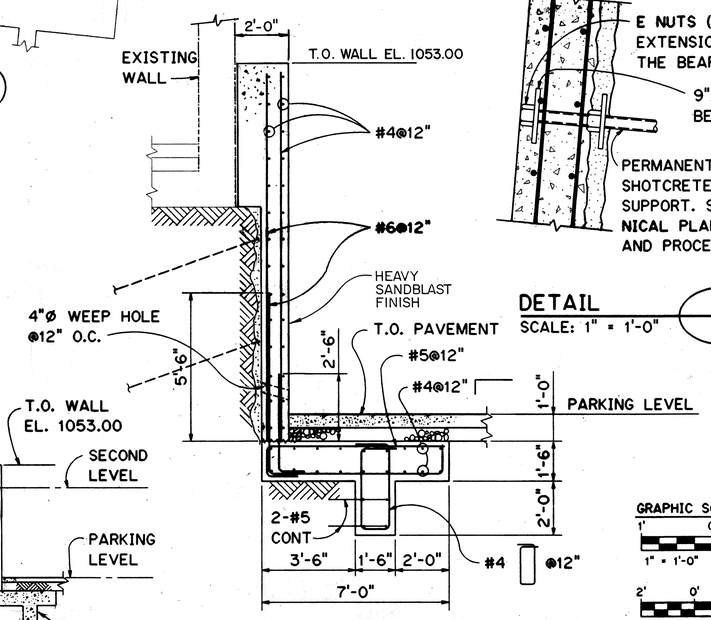

DETAIL 2
SCALE: 3/8" = 1'-0"

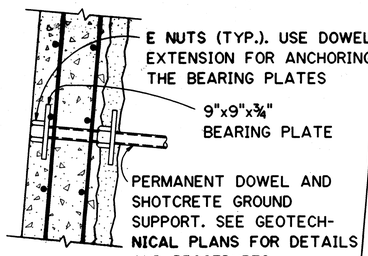

DETAIL 3
SCALE: 1" = 1'-0"

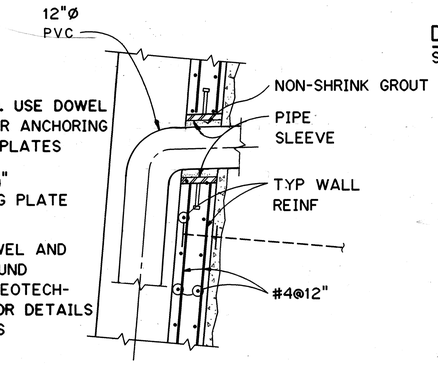

DETAIL 4
SCALE: 1/2" = 1'-0"

GRAPHIC SCALE
1' 0' 1' 2'
1" = 1'-0"
2' 0' 2' 4' 6'
3/8" = 1'-0"
8' 4' 0' 8' 16'
1/8" = 1'-0"

PETER G. BIBBES
LICENSED PROFESSIONAL ENGINEER
No. 6467-S
HAWAII, U.S.A.

THIS WORK WAS PREPARED BY ME OR UNDER MY SUPERVISION

DATE	REVISION
8/28/96	DCN 75-008: REVISED NORTH RETAINING WALL AT PARKING LEVEL
4/18/96	DCN 75-001: REV. FOOTING ELEVATION TO INDICATE BOTTOM OF FOOTING
10/27/95	ADDENDUM 2-CHANGED CMP TO PVC, INDICATED CONCRETE EMBEDMENT

STATE OF HAWAII
DEPARTMENT OF TRANSPORTATION
HIGHWAYS DIVISION

RETAINING WALL PLAN AND SECTIONS

TRAFFIC OPERATIONS CENTER EXPANSION
H-3 FINISH (UNIT III)
FAIP NO. I-H3-1(75), UNIT III
T.K. TUNNEL/ACCESS ROADS

SCALE: AS SHOWN DATE: JUN 1995

SHEET NO. 3S22 OF 22 SHEETS

ORIGINAL PLAN		DATE
SURVEY PLOTTED BY	F.M. CARZON	NOV '94
DRAWN BY	" "	"
TRACED BY	" "	NOV '94
NOTE BOOK	DESIGNED BY G. BENKOVICH	
	REVIEWED BY " "	
	QUANTITIES BY " "	DEC '94
NO.	CHECKED BY M.S. OWYANG	"

CARZON ELWOOD::2410:DWG.STRUCTJST033.FGB71 25JAN95-14.09.16

ADD. 179

FED. ROAD DIST. NO.	STATE	FED. AID PROJ. NO.	FISCAL YEAR	SHEET NO	TOTAL SHEETS
HAWAII	HAW.	I-H3-1(75) UNIT III	1994	180	353

BUILDING AIR CONDITIONING UNIT SCHEDULE

ABBREVIATIONS:

ACFM	ACTUAL CUBIC FEET PER MINUTE	DIM	DIMENSION	ESP	EXTERNAL STATIC PRESSURE	LAT	LEAVING AIR TEMPERATURE	PRESS	PRESSURE
APD	AIR PRESSURE DROP	DWDI	DOUBLE WIDTH, DOUBLE INLET	FDB	°F DRY BULB	MAX	MAXIMUM	RPM	REVOLUTIONS PER MINUTE
AR	ARRANGEMENT	DX	DIRECT EXPANSION	FPM	FEET PER MINUTE	MBH	1000 BTU/HR	SP	STATIC PRESSURE
ATM	ATMOSPHERIC	EAT	ENTERING AIR TEMPERATURE	FWB	°F WET BULB	IN	INCHES	TOT	TOTAL
BI	BACKWARD INCLINED	EFF	EFFICIENCY	HP	HORSEPOWER	OV	OUTLET VELOCITY	VEL	VELOCITY

EQUIPMENT NO.	AREA SERVED	AR					SECTIONS								FAN				COOLING COIL (FOR HEATING COIL SEE SCHEDULE THIS SHEET)					FILTER				ISOLATORS			REMARKS
							COIL				FILTER				PERFORMANCE		MOTOR														
															AIR CAPACITY	EXTERNAL STATIC PRESS IN				AIR SIDE				TYPE		NO AND SIZE				
																				EAT		LAT									
		BLOW-THRU	DRAW-THRU	MULTI-ZONE	HORIZONTAL	VERTICAL	CH W	HW	DX	ELECTRIC	FLAT	ANGLE	COMBINATION	MIXING BOX	ACFM	ESP	NAME PLATE HP	RATED VOLTS/PH/HZ	HEAT TRANSFER MBH	FDB	FWB	FDB	FWB		MAX FACE VEL FPM		ATM DUST SPOT EFF (%)	STATIC DEFLECTION IN	SUPPORT FROM	WEIGHT LBS	
AC-101	TRAFFIC OPERATIONS CENTER	-	●	-	●	-	-	-	●	●	●	-	-	●	5000	0.37	3	480/3/60	180	84	68	55	54	DISPOSABLE	500	-	77	-	-	800	

ELECTRIC HEATING COIL

ABBREVIATIONS:

ACFM	ACTUAL CUBIC FEET PER MINUTE	LAT	LEAVING AIR TEMPERATURE
APD	AIR PRESSURE DROP	MAX	MAXIMUM
EAT	ENTERING AIR TEMPERATURE	VEL	VELOCITY
FPM	FEET PER MINUTE		

EQUIPMENT NO.	UNIT SERVED	HEAT TRANSFER KW	AIR SIDE		VOLTS	PHASE	HERTZ	REMARKS
			EAT °F	LAT °F				
EH-101	AC-101	10	66	74	480	3	60	

REGISTER SCHEDULE

NO.	DESCRIPTION	SIZE	MAX. CFM	NC	QUANTITY	REMARKS	
CRR-1	CLG. RETURN REGISTER	24x24	1200	20	2	FOR SUSPENDED CEILING	PERFORATED RETURN GRILLE MODULE SIZE 24"x24"
CRR-2	CLG. RETURN REGISTER	24x24	600	20	1		
CRR-3	CLG. RETURN REGISTER	24x24	400	20	2		
CRR-4	CLG. RETURN REGISTER	24x24	500	20	1		
CRR-5	CLG. RETURN REGISTER	24x24	100	20	1		
CSD-1	CLG. SUPPLY DIFFUSER	16x16	800	20	3	FOR SUSPENDED CEILING	FOUR-WAY SUPPLY DIFFUSER W/ OPPOSED BLADE DAMPER, FLUSH FACE MODULE SIZE 24"x24" NECK SIZE AS INDICATED
CSD-2	CLG. SUPPLY DIFFUSER	14x14	600	20	1		
CSD-3	CLG. SUPPLY DIFFUSER	12x12	500	20	1		
CSD-4	CLG. SUPPLY DIFFUSER	12x12	400	20	2		

FAN SCHEDULE

EQUIPMENT NUMBER	SERVICE	ARRANGEMENT	CLASS	DRIVE	WHEEL			PERFORMANCE		MOTOR					ISOLATOR BASE		REMARKS
					DIAMETER (INCHES)	TYPE	RPM	AIR CAPACITY ACFM	STATIC H_2O PRESS IN.	NAME PLATE HP	RPM	VOLTS	PHASE	HERTZ	TYPE	STATIC DEFLEC IN.	
EF-103	ELEVATOR EQUIP. ROOM EXHAUST FAN	-	-	DIRECT	-	CENTRIFUGAL IN-LINE	-	585	0.375	1/8	-	115	1	60	-	-	OWNER FURNISHED
EF-104	PUMP ROOM EXHAUST FAN																NEW

CONDENSING UNIT SCHEDULE

ABBREVIATIONS:

CAP	CAPACITY	REQD	REQUIRED
HP	HORSEPOWER	MBH	LOW BTU/HR
RPM	REVOLUTIONS PER MINUTE		
QTY	QUANTITY		

EQUIPMENT NO.	UNIT SERVED	COOLING CAP	AMB. TEMP	CONDENSER					COMPRESSOR						WEIGHT LBS
				FANS	FAN MOTOR (EACH)						MOTOR (EACH)				
		MBH	DEG. F	QTY REQD	HP	VOLTS	PHASE	HERTZ	QTY REQD	TYPE	HP	VOLTS	PHASE	HERTZ	
CU-101	AC-101	185	95	3	1/2	480	3	60	2	HER-METIC	15	480	3	60	1100

NOTES:

1. CONTRACTOR SHALL COORDINATE ALL DUCT LOCATIONS WITH ELECTRICAL, STRUCTURAL, PLUMBING, FIRE PROTECTION AND OTHER DRAWINGS.
2. SEE ELECTRICAL DRAWINGS FOR POWER AND CONTROL WIRING FOR ALL MECHANICAL EQUIPMENT.
3. VERIFY ELECTRICAL CHARACTERISTICS OF HVAC EQUIPMENT WITH ELECTRICAL PLANS PRIOR TO EQUIPMENT SUBMITTAL.
4. PROVIDE MINIMUM 4-INCH HIGH CONCRETE HOUSEKEEPING PAD WITH VIBRATION ISOLATORS UNDER ALL FLOOR-MOUNTED EQUIPMENT, IF FOUNDATION IS NOT SHOWN ON THE PLANS. REFER TO STRUCTURAL DRAWINGS FOR PADS.
5. ALL DUCT DIMENSIONS ARE NET INSIDE DIMENSIONS.
6. FURNISH AND INSTALL TURNING VANES IN ALL RECTANGULAR DUCT ELBOWS.

LEGEND

● DESIGNATES EQUIPMENT/OPTION/TYPE TO BE INCLUDED WITH AC-101

– DESIGNATES MANUFACTURER'S STANDARD OR NOT APPLICABLE

FOR DETAIL AS-BUILT INFORMATION REFER TO CONSTRUCTION SUBMITTALS

NOTES: (CONT.)

7. ALL AIR REGISTERS SHALL BE PROVIDED WITH INTEGRAL VOLUME DAMPERS FOR AIR FLOW AND PRESSURE ADJUSTMENT.
8. PROVIDE 1/2 INCH WIRE MESH GALVANIZED SCREEN FOR ALL OPEN DUCT OR EQUIPMENT INTAKE/DISCHARGE OPENINGS. PROVIDE FRAMING NECESSARY FOR SCREEN SUPPORT ON LARGE OPENINGS.
9. THERMOSTATS SHALL BE MOUNTED AT A HEIGHT OF 3'-4, NEAR A LIGHT SWITCH.
10. STATIC PRESSURE IS IN INCHES WATER COLUMN.
11. ALL FAN HOUSINGS SHALL BE PROTECTED INTERNALLY AND EXTERNALLY WITH CORROSION-RESISTANT FACTORY-APPLIED COATING AS SPECIFIED.

KENNETH J. HARRIS LICENSED PROFESSIONAL ENGINEER No. 7707-M HAWAII, U.S.A.

THIS WORK WAS PREPARED BY ME OR UNDER MY SUPERVISION

DATE	REVISION
10/13/95	ADDENDUM 1

STATE OF HAWAII
DEPARTMENT OF TRANSPORTATION
HIGHWAYS DIVISION

HVAC EQUIPMENT SCHEDULES

TRAFFIC OPERATIONS CENTER EXPANSION
H-3 FINISH (UNIT III)
FAIP NO. I-H3-1(75), UNIT III
T.K. TUNNEL/ACCESS ROADS

SCALE: NONE DATE: JUN 1995

SHEET NO. 3M1 OF 9 SHEETS

ORIGINAL PLAN			
SURVEY PLOTTED BY	M.F. AGUILAR		DATE
DRAWN BY			NOV 94
TRACED BY			
NOTE BOOK	ISSUED BY	G.N. PLOTNER	OCT 94
	QUANTITIES		
NO.	CHECKED BY	K.J. HARRIS	JAN 95

DAVIS SF030A:::2410:[DWG.MECH]M7006.FGB;1 31JAN95-14.30.20

ADD. 180

FED. ROAD DIST. NO.	STATE	FED. AID PROJ. NO.	FISCAL YEAR	SHEET NO.	TOTAL SHEETS
HAWAII	HAW.	I-H3-1(75) UNIT III	1994	181	353

PUMP SCHEDULE

ABBREVIATIONS: EFF - MINIMUM ACCEPTABLE EFFICIENCY, TDH - TOTAL DYNAMIC HEAD

NOTE: HEAD IN FEET OF PUMPED FLUID

EQUIPMENT NUMBER	SERVICE	SUCTION RATIONGS						MOTOR										FLUID PUMPED					CONNECTIONS							TYPE										REMARKS
															TEMP				OTHER		TEMP																			
		NET POS FT	SUC LIFT FT	FLOW, GPM	TDH ft.	MIN. EF., %	POWER REQ'D, BHP	NAME PLATE, HP	RPM	VOLTS	PHASE	HERTZ	INDOORS	OUTDOORS	MIN. °F	MAX °F	WATER	FLUID	SPECIFIC GRAVITY	MIN. °F	MAX °F	FLANGED	SCREWED	SWEAT	RATING	CPSI			DUPLEX SUBMERGE	STAGES	HORIZONTAL	VERTICAL	SPLIT CASE	END SECTION	CLOSE COUPLE	GEAR TYPE			
MP-101A	DRAINAGE	-	-	50	43	-	-	1	-	460	3	60	-	●	50	104	●	-	1.0	40	85	-	-	-	-	-			●	-		●							
MP-101B	↓	↓	↓	↓	↓	↓	↓	↓	↓	↓	↓	↓	↓	↓	↓	↓	↓	↓	↓	↓	↓	↓	↓	↓	↓	↓			↓	↓		↓							

LEGEND

● DESIGNATES EQUIPMENT/OPTION/TYPE TO BE INCLUDED WITH MP-101A AND MP-101B

\- DESIGNATES MANUFACTURER'S STANDARD OR NOT APPLICABLE

FOR DETAIL AS-BUILT INFORMATION
REFER TO CONSTRUCTION SUBMITTALS

DATE	REVISION

STATE OF HAWAII
DEPARTMENT OF TRANSPORTATION
HIGHWAYS DIVISION

MECHANICAL
EQUIPMENT SCHEDULE

TRAFFIC OPERATIONS CENTER EXPANSION
H-3 FINISH (UNIT III)
FAIP NO. I-H3-1(75), UNIT III
T.K. TUNNEL/ACCESS ROADS

SCALE: NONE DATE: JUN 1995

KENNETH J. HARRIS
LICENSED PROFESSIONAL ENGINEER
No. 7707-M
HAWAII, U.S.A.

THIS WORK WAS PREPARED BY ME OR UNDER MY SUPERVISION

SHEET NO. 3M2 OF 9 SHEETS

ORIGINAL PLAN		DATE
	SURVEY PLOTTED BY	
	DRAWN BY M.F. AGUILAR	" OCT 94
	TRACED BY	
NOTE BOOK	DESIGNED BY G.N. PLOTNER	" OCT 94
	QUANTITIES BY	
NO.	CHECKED BY K.J. HARRIS	" JAN 95

AGUILAR 24T0:[DWG.MECHJMT007.FGB7] 28JAN95-17.45.50

FED. ROAD DIST. NO.	STATE	FED. AID PROJ. NO.	FISCAL YEAR	SHEET NO.	TOTAL SHEETS
HAWAII	HAW.	I-H3-1(75) UNIT III	1994	182	353

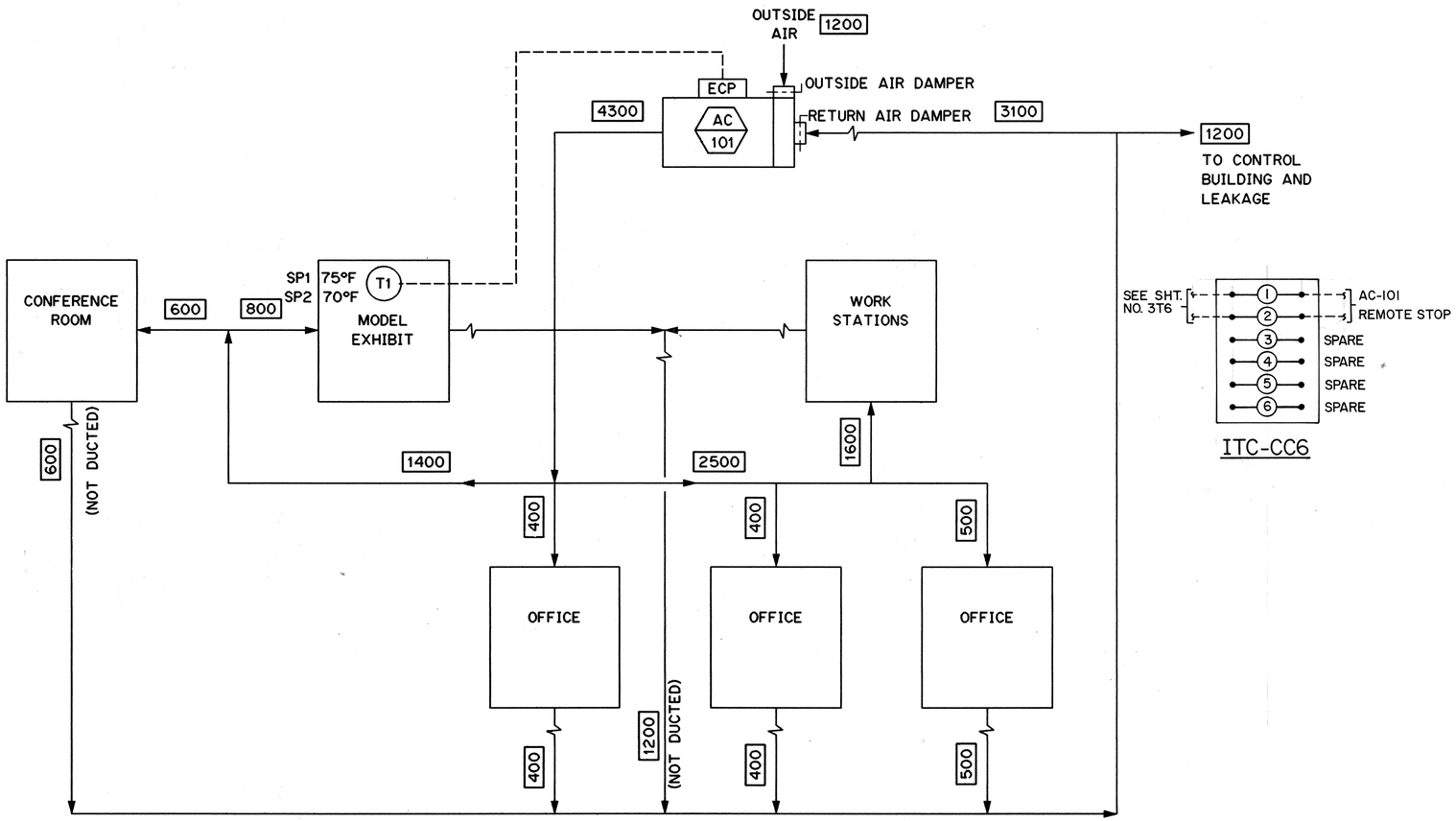

SYSTEM 1 : AC-101

ITC-CC6

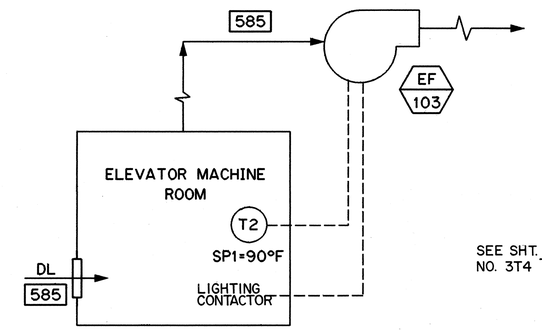

SYSTEM 2 : EF-103

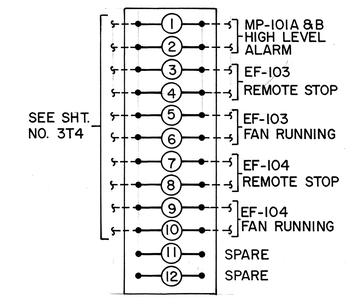

ITC-CC4

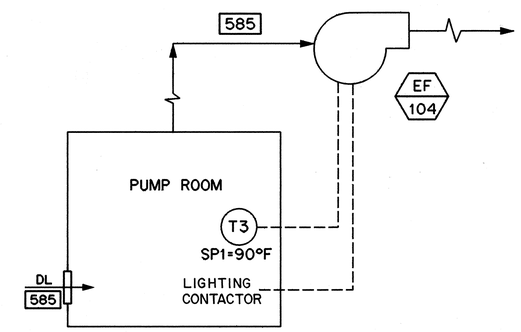

SYSTEM 3 : EF-104

OPERATING SEQUENCE

GENERAL

TRAFFIC OPERATIONS CENTER AIR CONDITIONING UNIT AC 101 SHALL BE TIMER AND THERMOSTATICALLY CONTROLLED.

ACTUATION OF TRAFFIC OPERATIONS CENTER SMOKE DETECTORS SHALL STOP THE AC UNIT.

MANUAL CONTROL

AIR CONDITIONING UNIT CAN BE STARTED AND STOPPED MANUALLY FROM TRAFFIC OPERATIONS CENTER (TOC), AND REMOTELY FROM THE CONTROL BUILDING.

AUTOMATIC CONTROL

AIR CONDITIONING UNIT AC 101 SHALL BE ENERGIZED THROUGH THE TIME CLOCK. ON THE RISE IN TEMPERATURE OF T1 ABOVE SET POINT 1 (SP1), CU-101 SHALL BE SWITCHED ON TO PROVIDE COOLING. WHEN TEMPERATURE OF T1 FALLS BELOW SET POINT 2 (SP2), EH-101 SHALL BE SWITCHED ON TO PROVIDE HEATING.

LEGEND

XXX AIR FLOW CFM

---- ELECTRICAL SIGNAL

T# ROOM THERMOSTAT

10/27/95	ADDENDUM 2-CHANGED 'LIGHT SWITCH' TO 'LIGHTING CONTACTOR'
10/13/95	ADDENDUM 1
DATE	REVISION

KENNETH J. HARRIS LICENSED PROFESSIONAL ENGINEER No. 7707-M HAWAII, U.S.A.

THIS WORK WAS PREPARED BY ME OR UNDER MY SUPERVISION

STATE OF HAWAII
DEPARTMENT OF TRANSPORTATION
HIGHWAYS DIVISION

AIR FLOW AND CONTROL DIAGRAM

TRAFFIC OPERATIONS CENTER EXPANSION
H-3 FINISH (UNIT III)
FAIP NO. I-H3-1(75), UNIT III
T.K. TUNNEL/ACCESS ROADS

SCALE: NONE DATE: JUN 1995

SHEET NO. 3M3 OF 9 SHEETS

		DATE
SURVEY PLOTTED BY	M.P. AGUILAR	OCT 94
DRAWN BY	" "	"
TRACED BY	G.N. PLOTNER	OCT 94
DESIGNED BY	" "	"
QUANTITIES BY	K.J. HARRIS	JAN 95
CHECKED BY		

ORIGINAL PLAN
NOTE BOOK NO.

DAVIS SF030A:::2410:DWG.MECHJMT017.FGB71 31JAN95-15.01.10

ADD. 182

FED. ROAD DIST. NO.	STATE	FED. AID PROJ. NO.	FISCAL YEAR	SHEET NO.	TOTAL SHEETS
HAWAII	HAW.	I-H3-1(75) UNIT III	1994	183	353

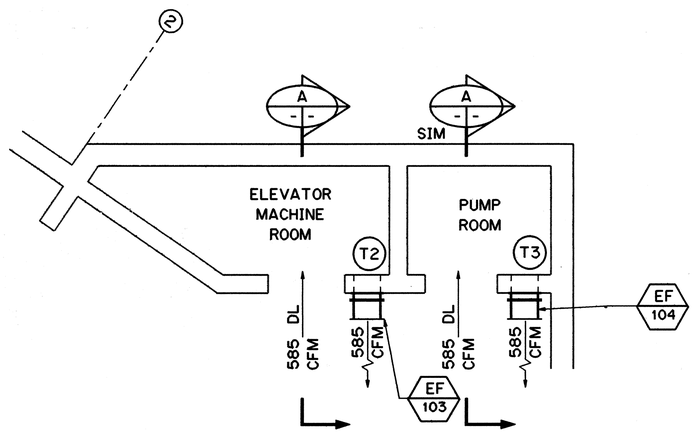

LOWER LEVEL PARTIAL PLAN

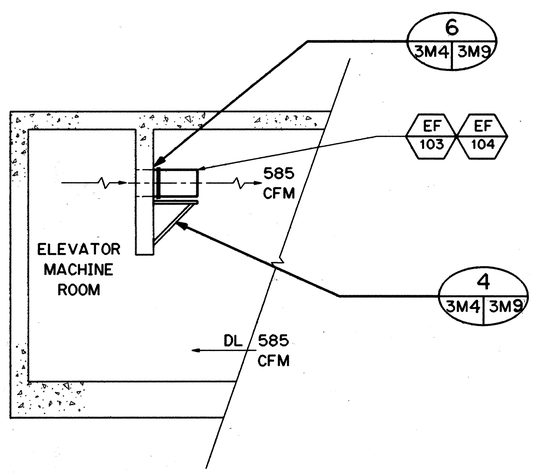

SECTION A

FOR DETAIL AS-BUILT INFORMATION
REFER TO CONSTRUCTION SUBMITTALS

DATE	REVISION

STATE OF HAWAII
DEPARTMENT OF TRANSPORTATION
HIGHWAYS DIVISION

HVAC - PARTIAL PLAN AND SECTION

TRAFFIC OPERATIONS CENTER EXPANSION
H-3 FINISH (UNIT III)
FAIP NO. I-H3-1(75), UNIT III
T.K. TUNNEL/ACCESS ROADS

SCALE: ¼" = 1'-0" DATE: JUN 1995

SHEET NO. 3M4 OF 9 SHEETS

4' 2' 0' 4' 8'
¼" = 1'-0"

KENNETH J. HARRIS
LICENSED PROFESSIONAL ENGINEER
No. 7707-M
HAWAII, U.S.A.

THIS WORK WAS PREPARED BY ME OR UNDER MY SUPERVISION

ORIGINAL PLAN		
NOTE BOOK	SURVEY PLOTTED BY	B. BUNYI
	DRAWN BY	" NOV 94
	TRACED BY	"
	DESIGNED BY	G. PLOTNER " NOV 94
	QUANTITIES BY	"
NO.	CHECKED BY	K. HARRIS " DEC 94

BUNYI ELWOOD::2410:[DWG.MECH]MT009.FGB71 28JAN95-16.06.30

FED. ROAD DIST. NO.	STATE	FED. AID PROJ. NO.	FISCAL YEAR	SHEET NO.	TOTAL SHEETS
HAWAII	HAW.	I-H3-1(75) UNIT III	1994	184	353

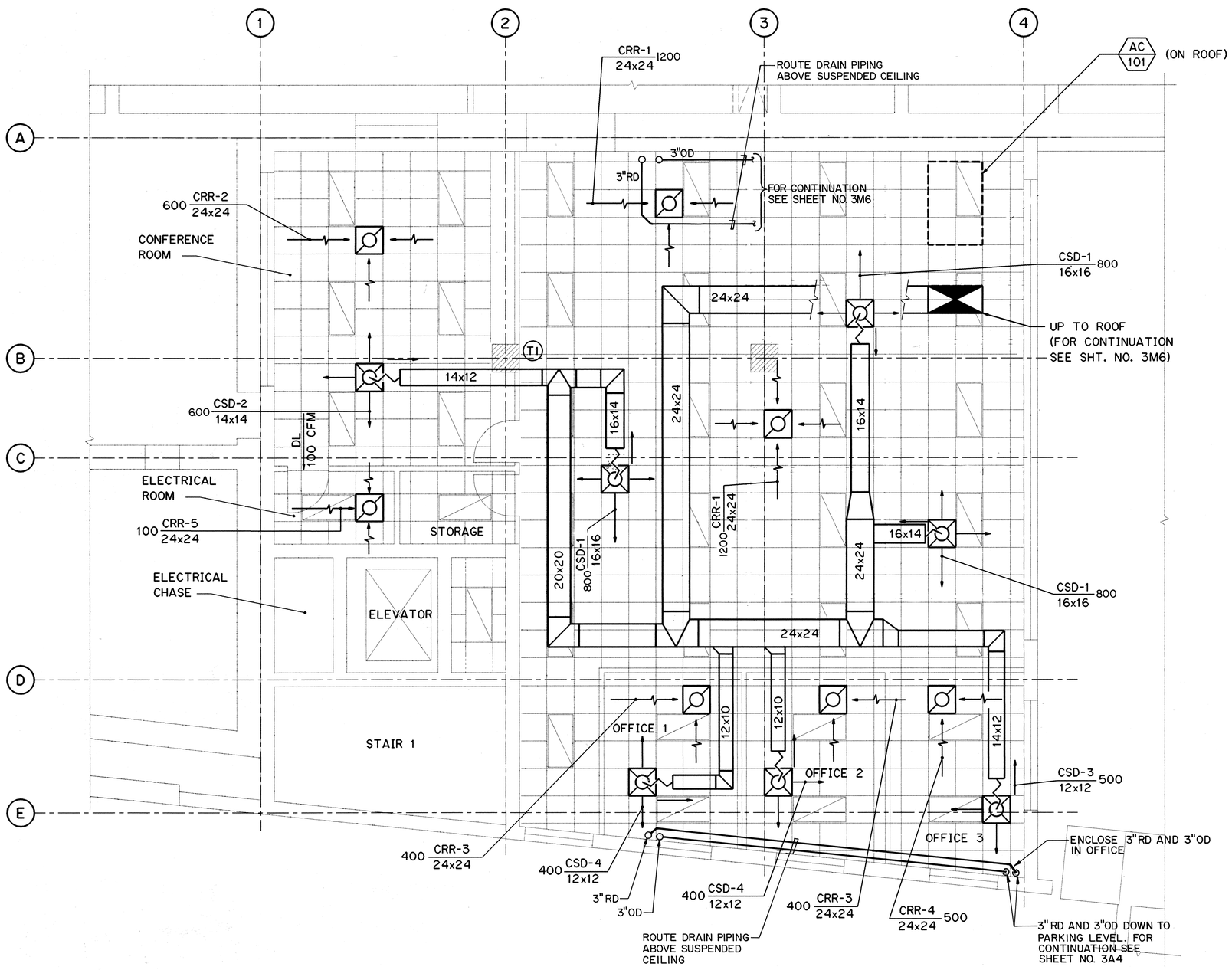

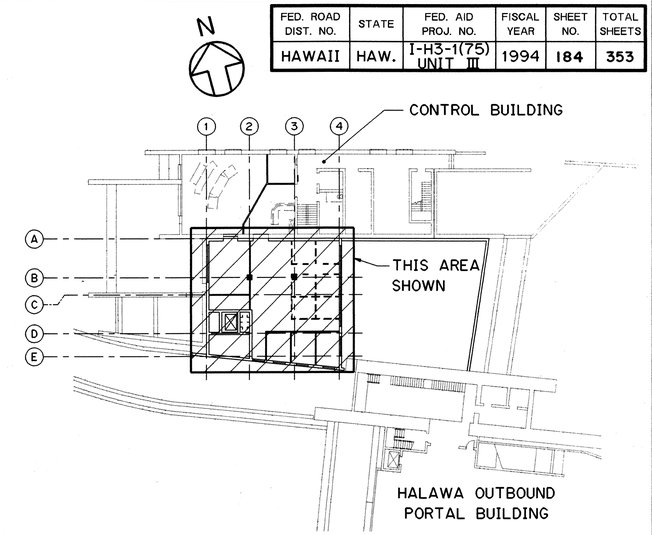

KEY PLAN

TRAFFIC OPERATIONS CENTER SECOND LEVEL

NOTES:

1. FOR REGISTER SCHEDULE SEE SHT. NO. 3M1.
2. FOR MECHANICAL SYMBOLS AND ABBREVIATIONS SEE SHT. NO. 1G13.

LEGEND:

LIGHT FIXTURE (SEE ELECTRICAL PLANS FOR TYPE AND ARCHITECTURAL PLANS FOR LOCATION)

GRAPHIC SCALE

4' 2' 0' 4' 8'

¼" = 1'-0"

KENNETH J. HARRIS LICENSED PROFESSIONAL ENGINEER No. 7707-M HAWAII, U.S.A.

THIS WORK WAS PREPARED BY ME OR UNDER MY SUPERVISION

DATE	REVISION
10/13/95	ADDENDUM 1

STATE OF HAWAII
DEPARTMENT OF TRANSPORTATION
HIGHWAYS DIVISION

HVAC

SECOND LEVEL PLAN

TRAFFIC OPERATIONS CENTER EXPANSION
H-3 FINISH (UNIT III)
FAIP NO. I-H3-1(75), UNIT III
T.K. TUNNEL/ACCESS ROADS

SCALE: ¼" = 1'-0" DATE: JUN 1995

SHEET NO. 3M5 OF 9 SHEETS

ORIGINAL PLAN			DATE
	SURVEY PLOTTED BY	CAD	OCT 94
	DRAWN BY		
NOTE BOOK	TRACED BY	G.N./R.PLOTNER	OCT 94
	DESIGNED BY		
NO.	QUANTITIES BY		
	CHECKED BY	K.J.HARRIS	JAN 95

BURNS SACVMS:::2410:[DWG.MECH]MT003.FGB;1 09MAY95-08.04.20

ADD. 184

FED. ROAD DIST. NO.	STATE	FED. AID PROJ. NO.	FISCAL YEAR	SHEET NO.	TOTAL SHEETS
HAWAII	HAW.	I-H3-1(75) UNIT III	1994	185	353

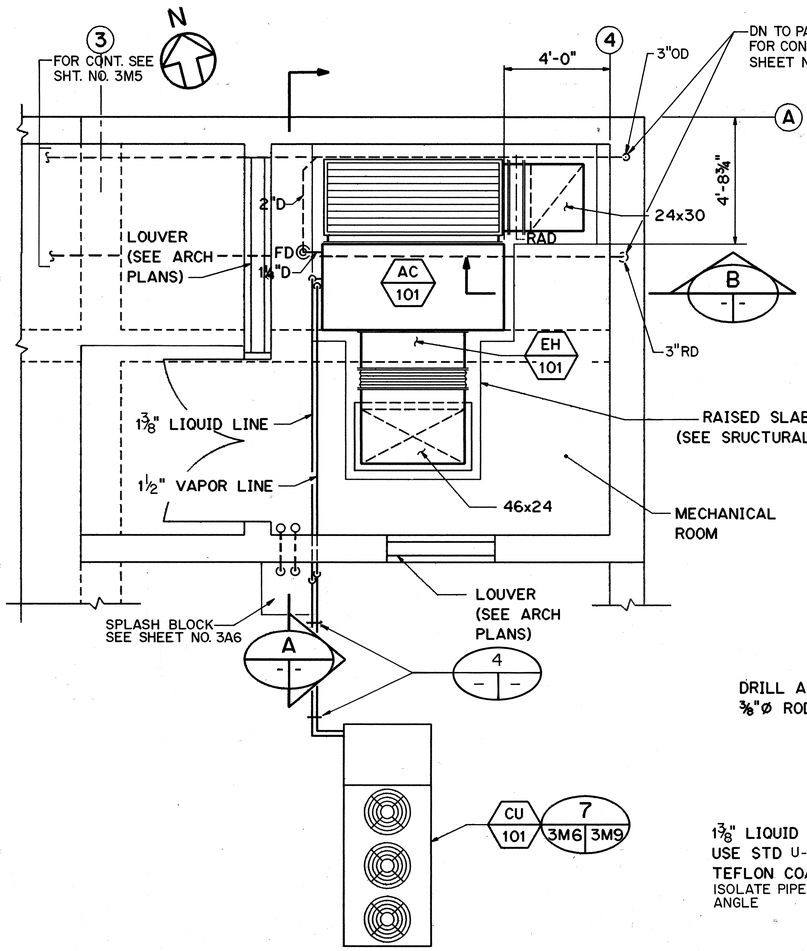

ROOF PARTIAL PLAN

SCALE: ⅜" = 1'-0"

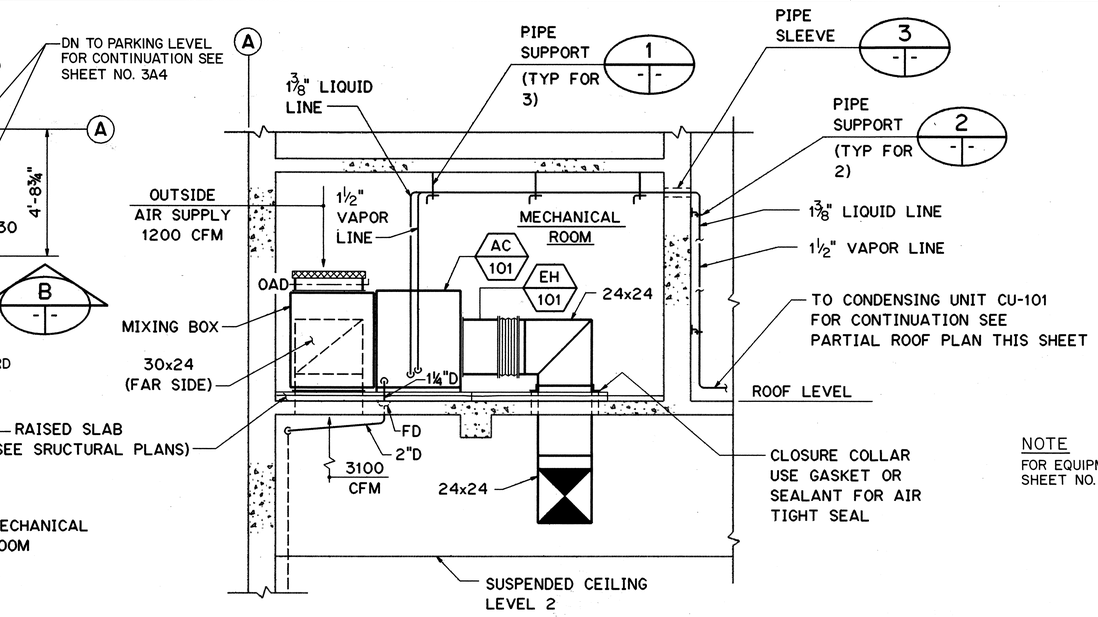

SECTION A

SCALE: ⅜" = 1'-0"

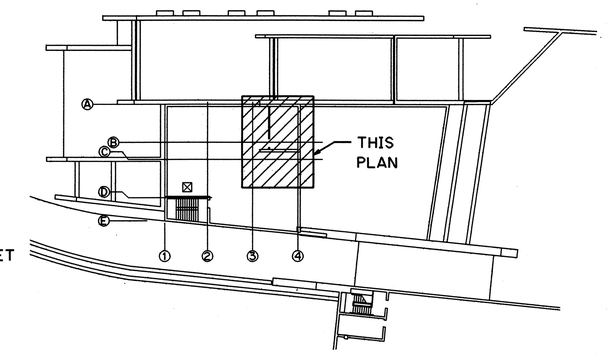

NOTE

FOR EQUIPMENT SCHEDULES SEE SHEET NO. 3MI

KEY PLAN

NO SCALE

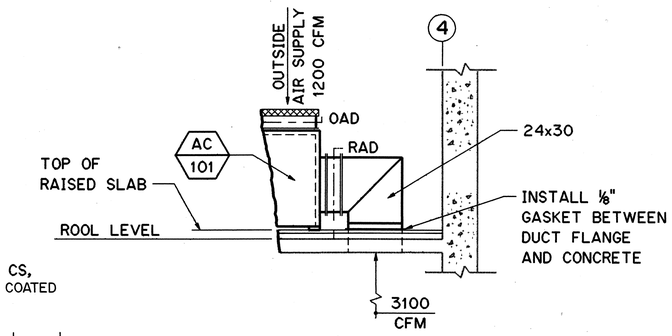

SECTION B

SCALE: ⅜" = 1'-0"

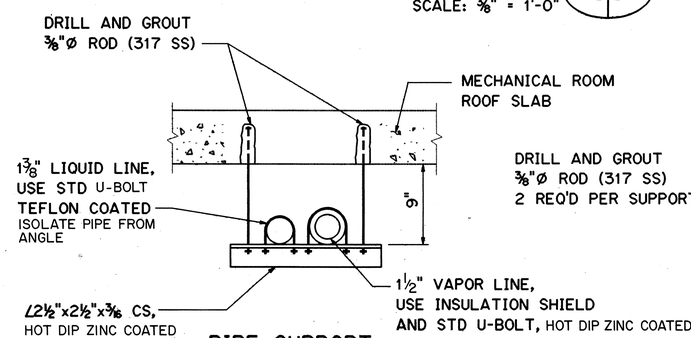

PIPE SUPPORT DETAIL 1

SCALE: 1½" = 1'-0"

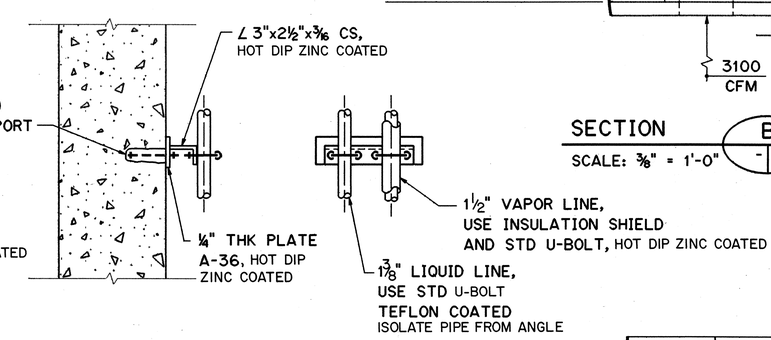

PIPE SUPPORT DETAIL 2

SCALE: 1½" = 1'-0"

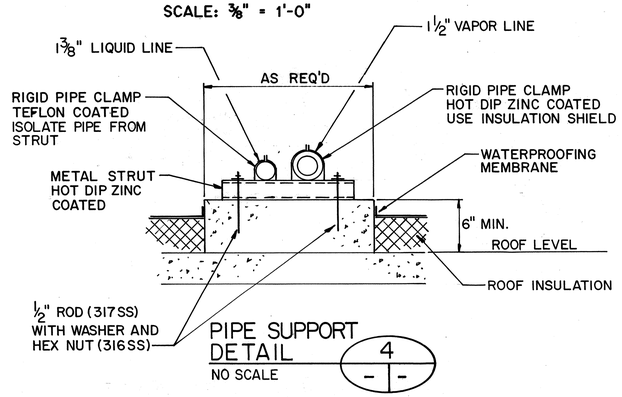

PIPE SUPPORT DETAIL 4

NO SCALE

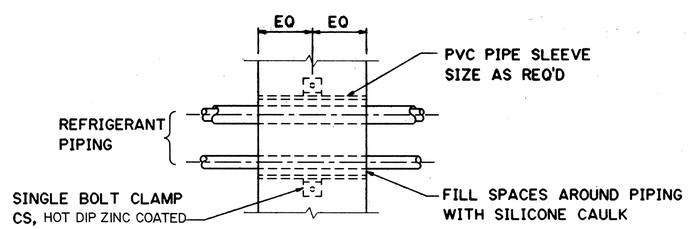

PIPE SLEEVE DETAIL 3

SCALE: 1½" = 1'-0"

GRAPHIC SCALES

2' 0' 2' 4' 6'
⅜" = 1'-0"

1' 0' 1'
1½" = 1'-0"

STATE OF HAWAII
KENNETH J. HARRIS
LICENSED PROFESSIONAL ENGINEER
No. 7707-M
HAWAII, U.S.A.

THIS WORK WAS PREPARED BY ME OR UNDER MY SUPERVISION

DATE	REVISION
10/13/95	ADDENDUM I

STATE OF HAWAII
DEPARTMENT OF TRANSPORTATION
HIGHWAYS DIVISION

HVAC MECH. RM. PARTIAL PLAN, SECTIONS & DETAILS

TRAFFIC OPERATIONS CENTER EXPANSION
H-3 FINISH (UNIT III)
FAIP NO. I-H3-1(75), UNIT III
T.K. TUNNEL/ACCESS ROADS

SCALE: AS NOTED DATE: JUN 1995

SHEET NO. 3M6 OF 9 SHEETS

ORIGINAL PLAN		DATE
	SURVEY PLOTTED BY	M.P. AGUILAR
	DRAWN BY	* * * * *
NOTE BOOK	TRACED BY	D.E. DRYDEN
	DESIGNED BY	NOV 94
	QUANTITIES BY	
NO.	CHECKED BY	K.J. HARRIS JAN 95

DAVIS SF030A:::2410:[DWG.MECHJMT008.FGB7] 31JAN95-15.19.50

ADD. 185

FED. ROAD DIST. NO.	STATE	FED. AID PROJ. NO.	FISCAL YEAR	SHEET NO.	TOTAL SHEETS
HAWAII	HAW.	I-H3-1(75) UNIT III	1994	186	353

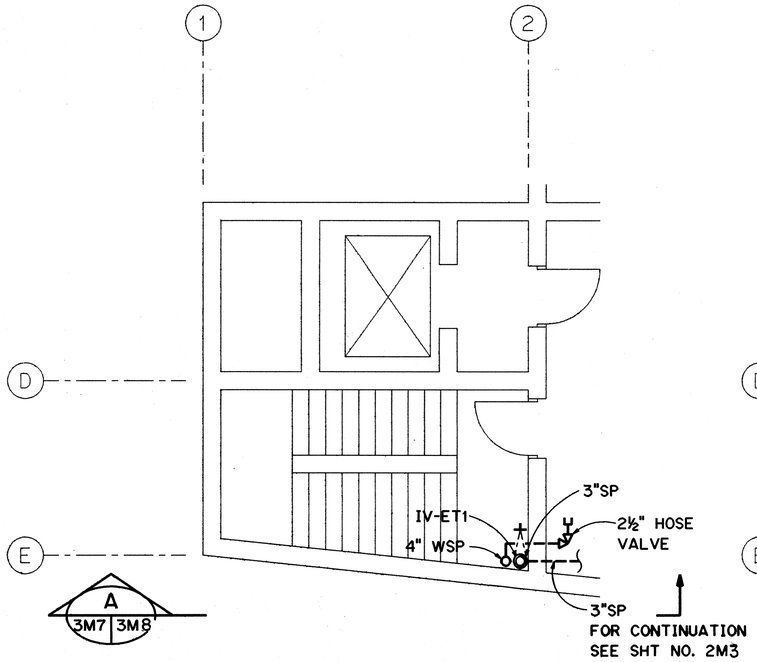

LOWER LEVEL PARTIAL PLAN

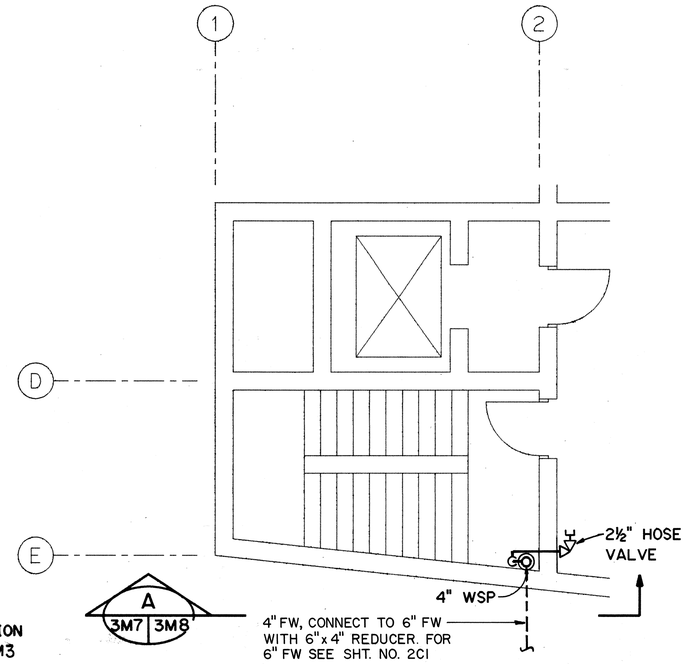

PARKING LEVEL PARTIAL PLAN

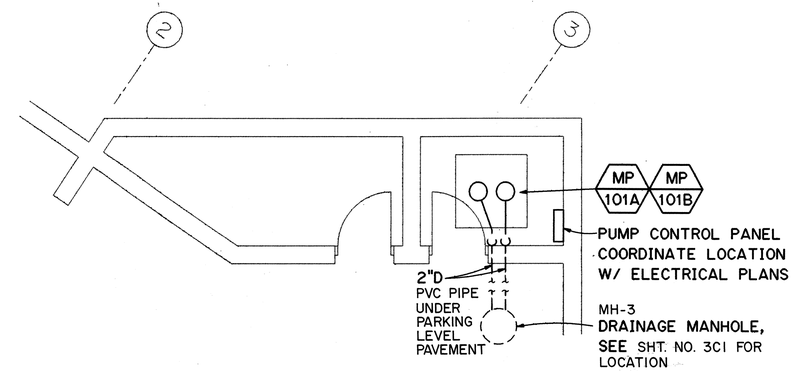

PUMP ROOM PARTAIL PLAN

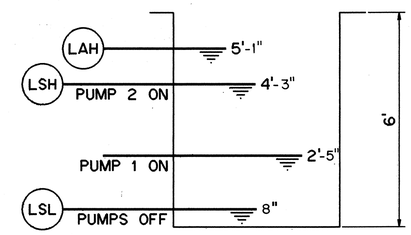

MP-101A AND MP-101B CONTROL SETTINGS

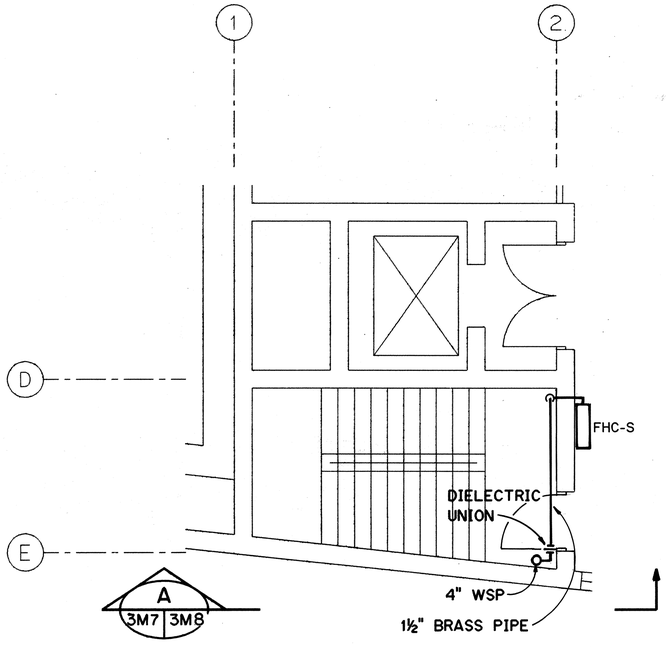

SECOND LEVEL PARTIAL PLAN

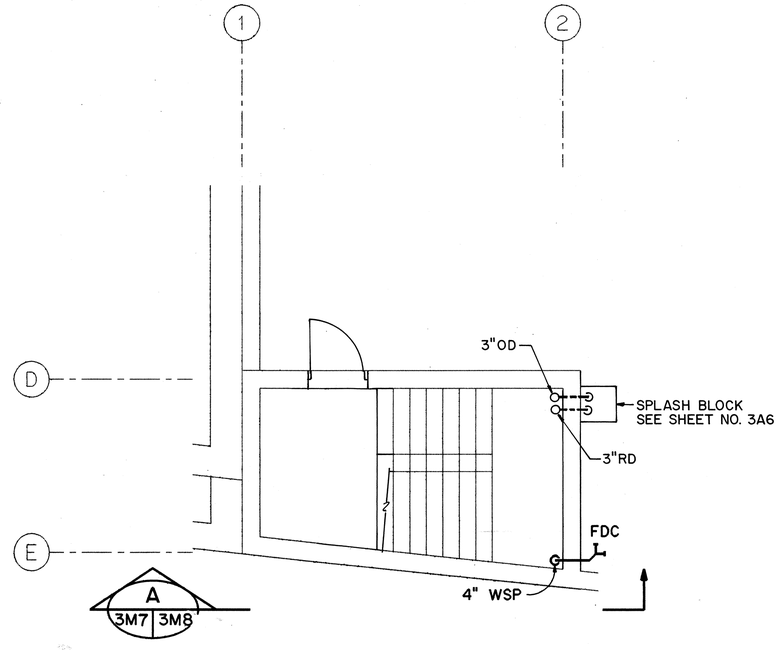

ROOF LEVEL PARTIAL PLAN

NOTE

FOR FIRE PROTECTION P&ID SEE REFERENCE PLANS
FAIP NO. I-H3-1(66)
SHEET NOS 30/M20 AND 32/M22

FOR DETAIL AS-BUILT INFORMATION REFER TO CONSTRUCTION SUBMITTALS

GRAPHIC SCALE
4' 2' 0' 4' 8'
¼" = 1'-0"

KENNETH J. HARRIS
LICENSED PROFESSIONAL ENGINEER
No. 7707-M
HAWAII, U.S.A.

THIS WORK WAS PREPARED BY ME OR UNDER MY SUPERVISION

DATE	REVISION
10/13/95	ADDENDUM 1

STATE OF HAWAII
DEPARTMENT OF TRANSPORTATION
HIGHWAYS DIVISION

PIPING PARTIAL PLANS

TRAFFIC OPERATIONS CENTER EXPANSION
H-3 FINISH (UNIT III)
FAIP NO. I-H3-1(75), UNIT III
T.K. TUNNEL/ACCESS ROADS

SCALE: 1/4" = 1'-0" DATE: JUN 1995

SHEET NO. 3M7 OF 9 SHEETS

ADD. 186

ORIGINAL PLAN	SURVEY PLOTTED BY M.P. AGUILAR	DATE
	DRAWN BY	
	TRACED BY	NOV 94
NOTE BOOK	DESIGNED BY G.N. PLOTNER	NOV 94
	QUANTITIES BY	
NO.	CHECKED BY K.J. HARRIS	JAN 95

DAVIS SF030A:::2410:[DWG.MECH]MT014.FGB;1 31JAN95-15.38.30

FED. ROAD DIST. NO.	STATE	FED. AID PROJ. NO.	FISCAL YEAR	SHEET NO.	TOTAL SHEETS
HAWAII	HAW.	I-H3-1(75) UNIT III	1994	187	353

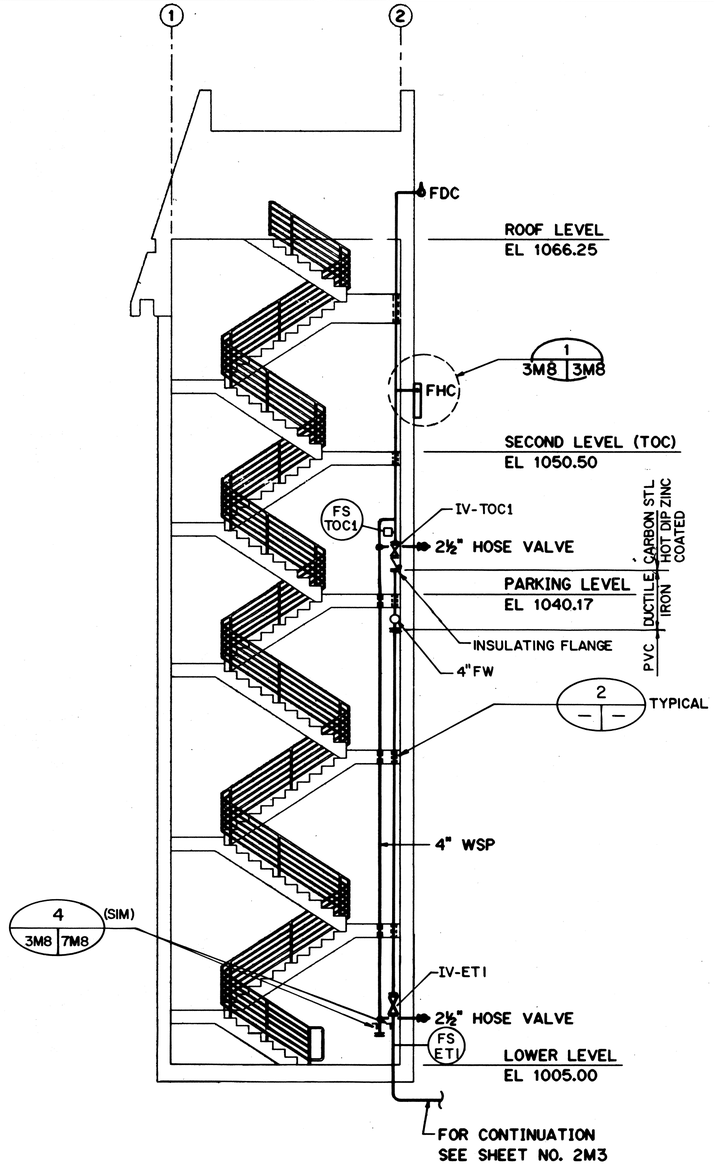

SECTION A 3M7 3M8
SCALE: 3/16" = 1'-0"

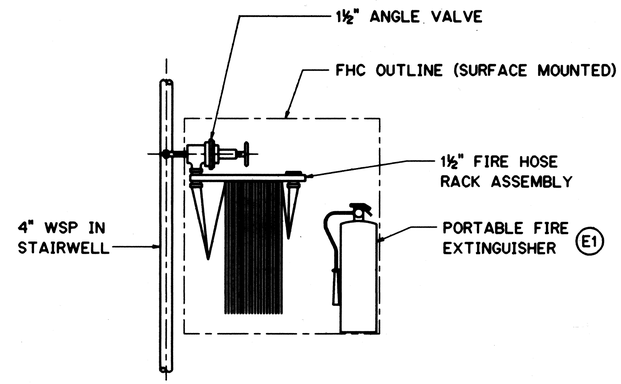

FIRE HOSE CABINET (FHC-S) DETAIL 1 3M8 3M8
SCALE: ½" = 1'-0"

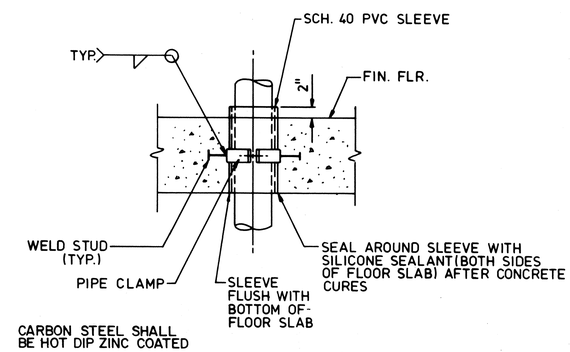

FLOOR SLEEVE DETAIL 2
NO SCALE

10/27/95	ADDENDUM 2-CLARIFIED PIPING MAT'L, IDENTIFIED IV/FS-ET1
10/13/95	ADDENDUM 1
DATE	REVISION

STATE OF HAWAII
DEPARTMENT OF TRANSPORTATION
HIGHWAYS DIVISION

PIPING
SECTIONS AND DETAILS
TRAFFIC OPERATIONS CENTER EXPANSION
H-3 FINISH (UNIT III)
FAIP NO. I-H3-1(75), UNIT III
T.K. TUNNEL/ACCESS ROADS

SCALE: AS NOTED DATE: JUN 1995

SHEET NO. 3M8 OF 9 SHEETS

GRAPHIC SCALES
2' 1' 0' 2' 4'
1/8" = 1'-0"
5' 0' 5' 10'
3/16" = 1'-0"

KENNETH J. HARRIS
LICENSED PROFESSIONAL ENGINEER
No. 7707-M
HAWAII, U.S.A.

THIS WORK WAS PREPARED BY ME OR UNDER MY SUPERVISION.

ORIGINAL PLAN			DATE
NOTE BOOK	SURVEY PLOTTED BY	B. BUNYI	NOV 94
	TRACED BY		
	DESIGNED BY	G. PLOTNER	NOV 94
	QUANTITIES BY		
NO.	CHECKED BY	K. HARRIS	DEC 94

DAVIS SF030A:::2410:[DWG.MECH]MT002.FGB;1 31JAN95-15.41.10

ADD. 187

FED. ROAD DIST. NO.	STATE	FED. AID PROJ. NO.	FISCAL YEAR	SHEET NO.	TOTAL SHEETS
HAWAII	HAW.	I-H3-1(75) UNIT III	1994	188	353

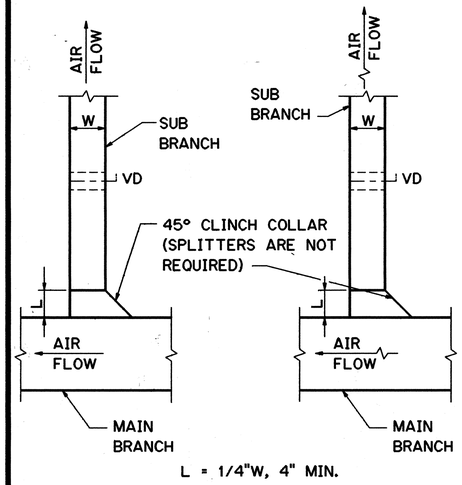

SUPPLY, RETURN AND EXHAUST DUCT BRANCH

DETAIL 1

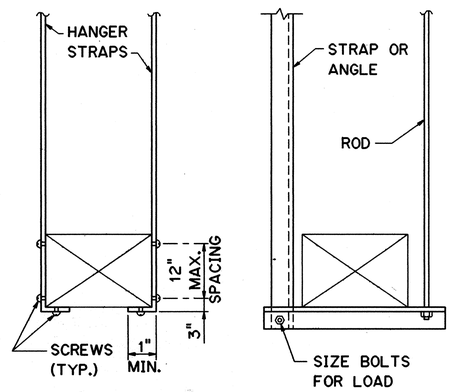

HANGER ATTACHMENTS FOR RECTANGULAR DUCTS

DETAIL 2

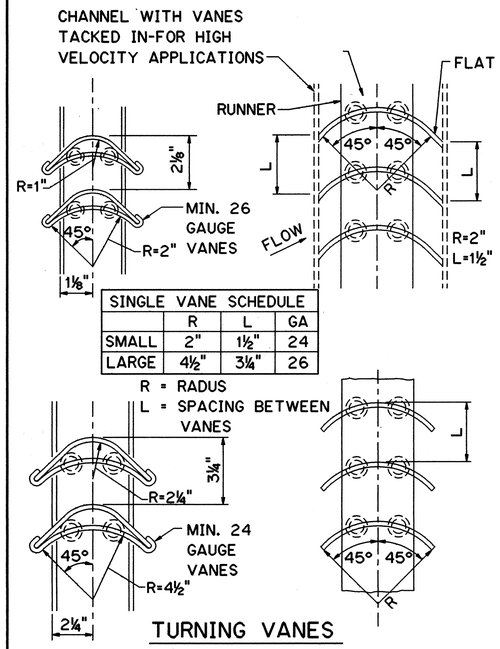

SINGLE VANE SCHEDULE	R	L	GA
SMALL	2"	1½"	24
LARGE	4½"	3¼"	26

TURNING VANES

DETAIL 3

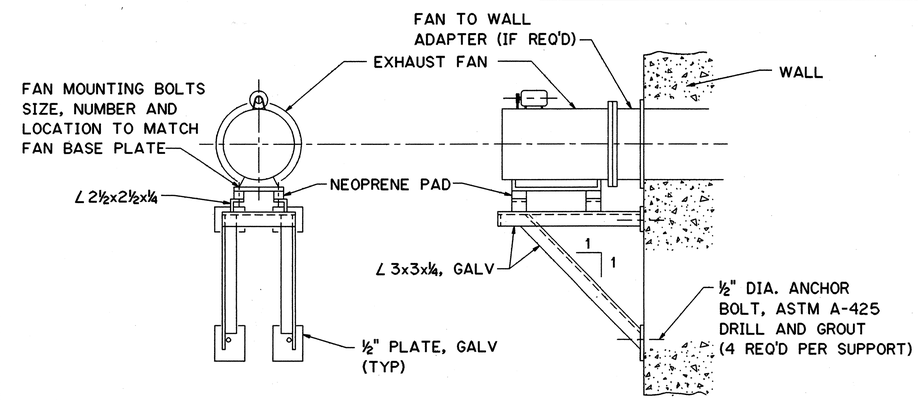

EXHAUST FAN SUPPORT

DETAIL 4

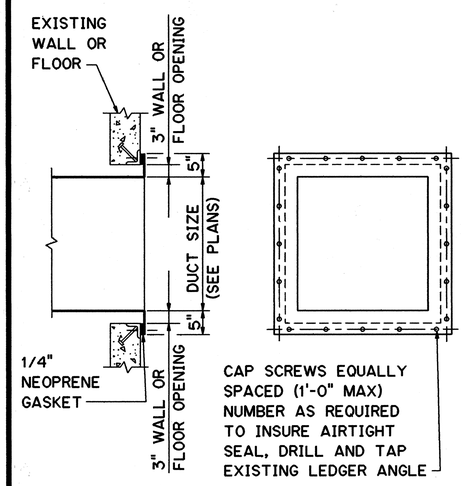

TYPICAL DUCT TO INTERIOR WALL OR FLOOR PENETRATION ATTACHMENT

DETAIL 5

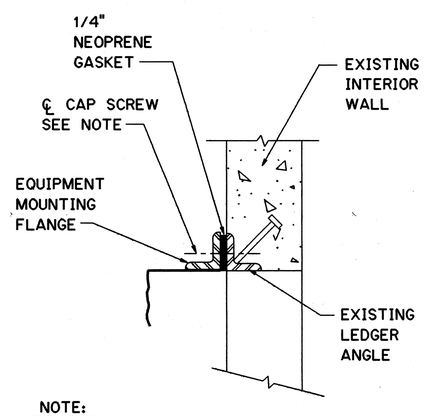

NOTE:
NUMBER, SIZE AMD PATTERN OF CAP SCREWS TO MATCH EQUIPMENT MOUNTING FLANGE DRILL AND TAP EXISTING LEDGER ANGLE TO SUIT.

TYPICAL EQUIPMENT TO INTERIOR WALL MOUNTING DETAIL

DETAIL 6

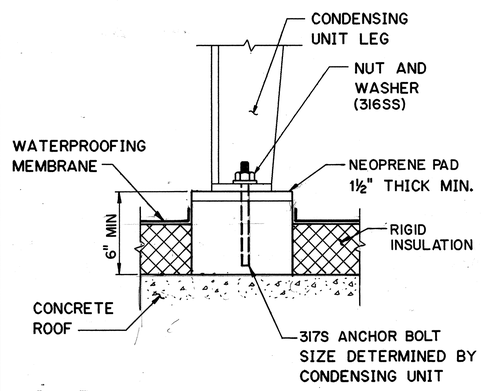

ROOF-MOUNTED CONDENSING UNIT INSTALLATION

DETAIL 7

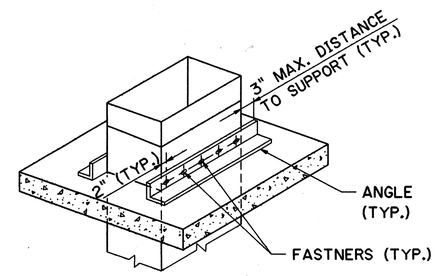

RISER SUPPORTS FROM ROOF

DETAIL 8

10/13/95	ADDENDUM 1
DATE	REVISION

STATE OF HAWAII
DEPARTMENT OF TRANSPORTATION
HIGHWAYS DIVISION

HVAC DETAILS

TRAFFIC OPERATIONS CENTER EXPANSION
H-3 FINISH (UNIT III)
FAIP NO. I-H3-1(75), UNIT III
T.K. TUNNEL/ACCESS ROADS

SCALE: NONE DATE: JUN 1995

KENNETH J. HARRIS LICENSED PROFESSIONAL ENGINEER No. 7707-M HAWAII, U.S.A.

THIS WORK WAS PREPARED BY ME OR UNDER MY SUPERVISION

ORIGINAL PLAN	SURVEY PLOTTED BY M.F. AGUILAR	DATE OCT 94
	DRAWN BY * * * *	
NOTE BOOK	TRACED BY G.N. PLOTNER	OCT 94
	DESIGNED BY * * * *	
NO.	QUANTITIES BY K.J. HARRIS	JAN 95
	CHECKED BY * * * *	

FED. ROAD DIST. NO.	STATE	FED. AID PROJ. NO.	FISCAL YEAR	SHEET NO.	TOTAL SHEETS
HAWAII	HAW.	I-H3-1(75) UNIT III	1994	189	353

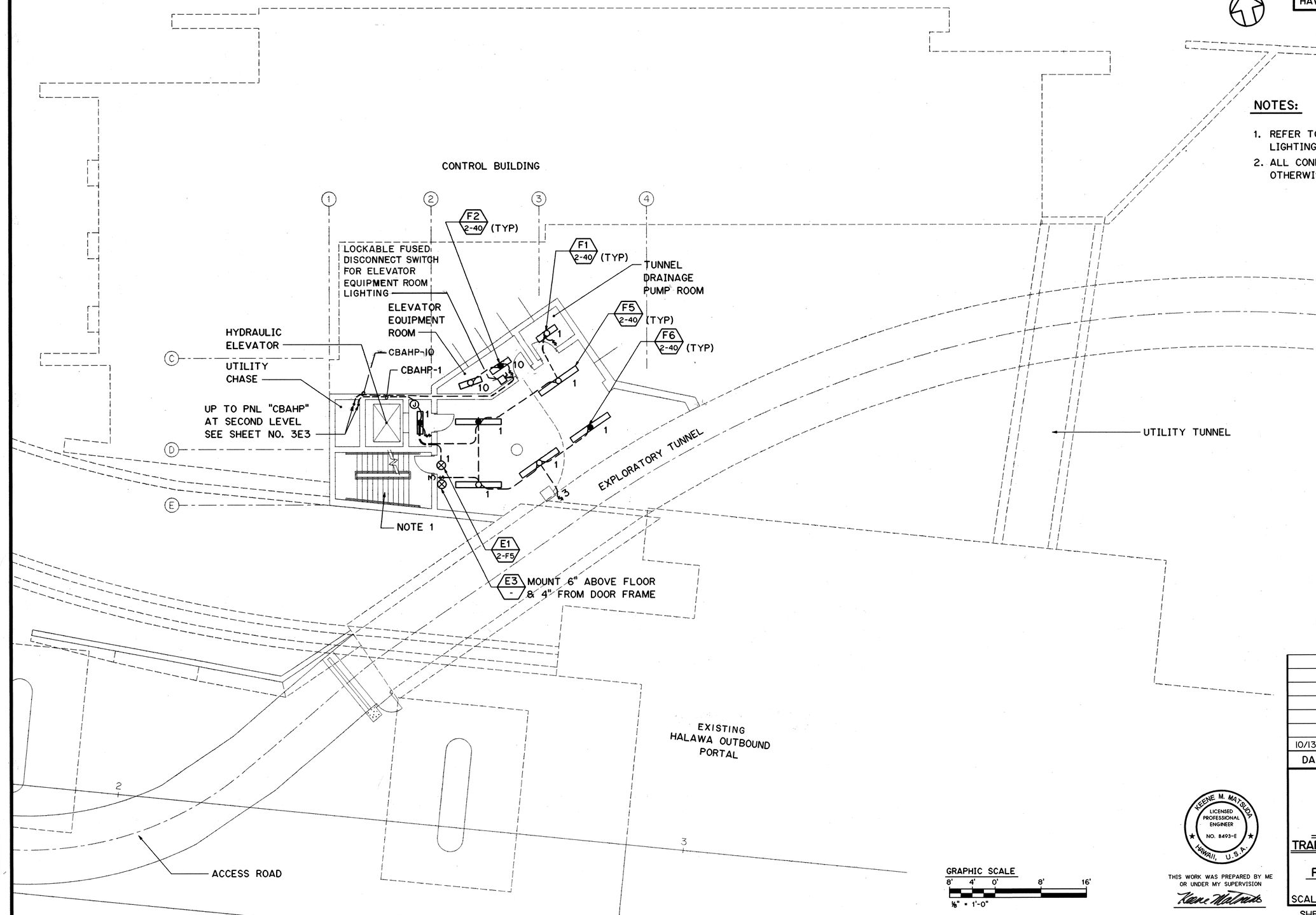

NOTES:

1. REFER TO SHEET NO. 3E9 FOR STAIR LIGHTING DETAILS.
2. ALL CONDUITS ARE 1" GRS UNLESS OTHERWISE NOTED.

FOR DETAIL AS-BUILT INFORMATION REFER TO CONSTRUCTION SUBMITTALS

GRAPHIC SCALE
8' 4' 0' 8' 16'
⅛" = 1'-0"

KEENE M. MATSUDA
LICENSED PROFESSIONAL ENGINEER
NO. 8493-E
HAWAII, U.S.A.

THIS WORK WAS PREPARED BY ME OR UNDER MY SUPERVISION

DATE	REVISION
10/13/95	ADDENDUM I

STATE OF HAWAII
DEPARTMENT OF TRANSPORTATION
HIGHWAYS DIVISION

LIGHTING
LOWER LEVEL PLAN
TRAFFIC OPERATIONS CENTER EXPANSION
H-3 FINISH (UNIT III)
FAIP NO. I-H3-1(75), UNIT III
T.K. TUNNEL/ACCESS ROADS

SCALE: ⅛" = 1'-0" DATE: JUN 1995

SHEET NO. 3E1 OF 11 SHEETS

		DATE
SURVEY PLOTTED BY		
DRAWN BY	R. J. HERNANDEZ	NOV 94
TRACED BY		
DESIGNED BY	T. SANCHEZ	NOV 94
QUANTITIES BY		
CHECKED BY	K. MATSUDA	DEC 94

ORIGINAL PLAN
NOTE BOOK
NO.

HERNANDEZ ELWOOD:::2410:[DWG.ELECTJE013.FGB]1 12JUN95-14.58.20

FED. ROAD DIST. NO.	STATE	FED. AID PROJ. NO.	FISCAL YEAR	SHEET NO.	TOTAL SHEETS
HAWAII	HAW.	I-H3-1(75) UNIT III	1994	190	353

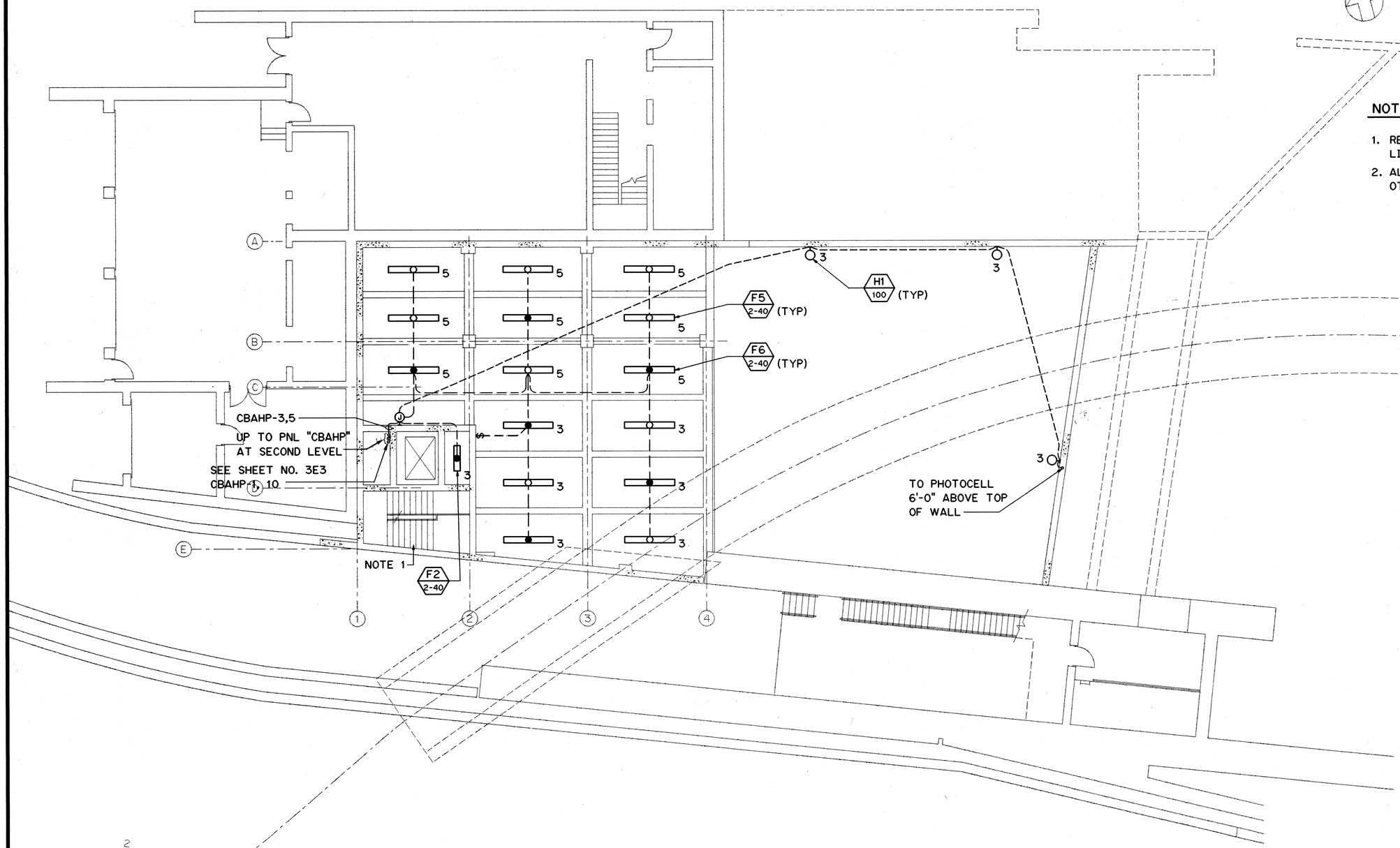

NOTES:

1. REFER TO SHEET NO. 3E9 FOR STAIR LIGHTING DETAILS.
2. ALL CONDUITS ARE 1" GRS UNLESS OTHERWISE NOTED.

GRAPHIC SCALE
8' 4' 0' 8' 16'
⅛" = 1'-0"

KEENE M. MATSUDA
LICENSED PROFESSIONAL ENGINEER
NO. 8493-E
HAWAII, U.S.A.

THIS WORK WAS PREPARED BY ME OR UNDER MY SUPERVISION

Keene Matsuda

DATE	REVISION
10/13/95	ADDENDUM I

STATE OF HAWAII
DEPARTMENT OF TRANSPORTATION
HIGHWAYS DIVISION

LIGHTING
PARKING LEVEL PLAN
TRAFFIC OPERATIONS CENTER EXPANSION
H-3 FINISH (UNIT III)
FAIP NO. I-H3-1(75), UNIT III
T.K. TUNNEL/ACCESS ROADS

SCALE: ⅛" = 1'-0" DATE: JUN 1995

SHEET NO. 3E2 OF 11 SHEETS

ORIGINAL PLAN		DATE
SURVEY PLOTTED BY	R. J. HERNANDEZ	
DRAWN BY	" "	NOV 94
TRACED BY	" "	
DESIGNED BY	T. SANCHEZ	NOV 94
QUANTITIES BY	" "	
CHECKED BY	K. MATSUDA	DEC 94
NOTE BOOK		
NO.		

HERNANDEZ ELWOOD:::2410:[DWG.ELECT]E011.FGB71 12JUN95-15.01.30

ADD. 190

FED. ROAD DIST. NO.	STATE	FED. AID PROJ. NO.	FISCAL YEAR	SHEET NO.	TOTAL SHEETS
HAWAII	HAW.	I-H3-1(75) UNIT III	1994	191	353

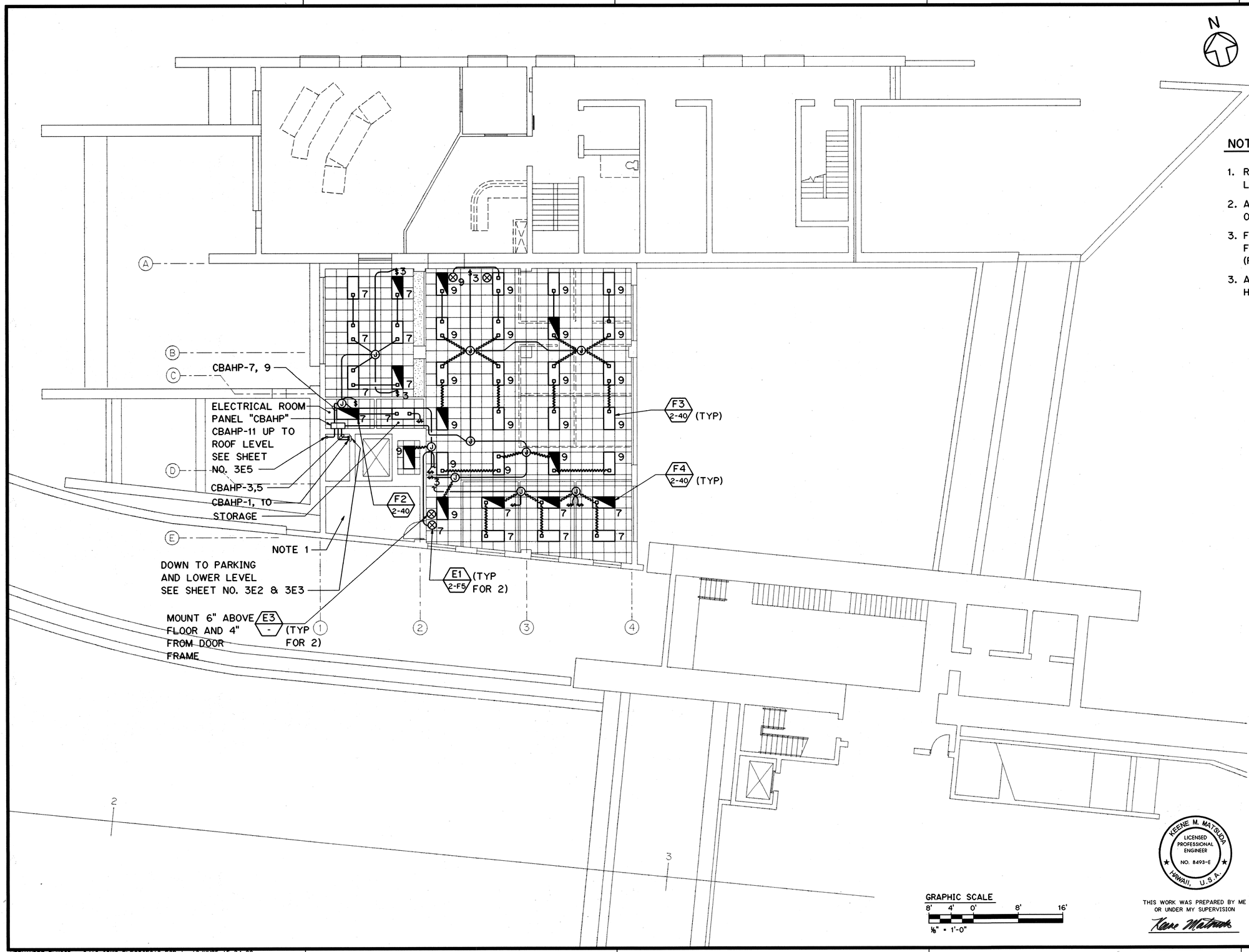

NOTES:

1. REFER TO SHEET NO. 3E9 FOR STAIR LIGHTING DETAILS.
2. ALL CONDUITS ARE 1" GRS UNLESS OTHERWISE NOTED.
3. FOR EXACT LOCATION OF LIGHT FIXTURES REFER TO SHEET NO. 3A16, (REFLECTED CEILING PLAN).
3. ALL LIGHT SWITCHES IN THIS PLAN SHALL HAVE DIMMER CONTROL.

GRAPHIC SCALE
8' 4' 0' 8' 16'
⅛" = 1'-0"

KEENE M. MATSUDA
LICENSED PROFESSIONAL ENGINEER
NO. 8493-E
HAWAII, U.S.A.

THIS WORK WAS PREPARED BY ME OR UNDER MY SUPERVISION

DATE	REVISION

STATE OF HAWAII
DEPARTMENT OF TRANSPORTATION
HIGHWAYS DIVISION

LIGHTING

SECOND LEVEL PLAN

TRAFFIC OPERATIONS CENTER EXPANSION
H-3 FINISH (UNIT III)
FAIP NO. I-H3-1(75), UNIT III
T.K. TUNNEL/ACCESS ROADS

SCALE: ⅛" = 1'-0" DATE: JUN 1995

SHEET NO. 3E3 OF 11 SHEETS

ORIGINAL PLAN		DATE
SURVEY PLOTTED BY	R. J. HERNANDEZ	
DRAWN BY	" "	NOV 94
TRACED BY	" "	
DESIGNED BY	T. SANCHEZ	NOV 94
NOTE BOOK		
QUANTITIES		
CHECKED BY	K. MATSUDA	DEC 94
NO.		

HERNANDEZ ELWOOD:::2410:IDWG.ELECTJE012.FGB71 12JUN95-15.24.00

FED. ROAD DIST. NO.	STATE	FED. AID PROJ. NO.	FISCAL YEAR	SHEET NO.	TOTAL SHEETS
HAWAII	HAW.	I-H3-1(75) UNIT III	1994	192	353

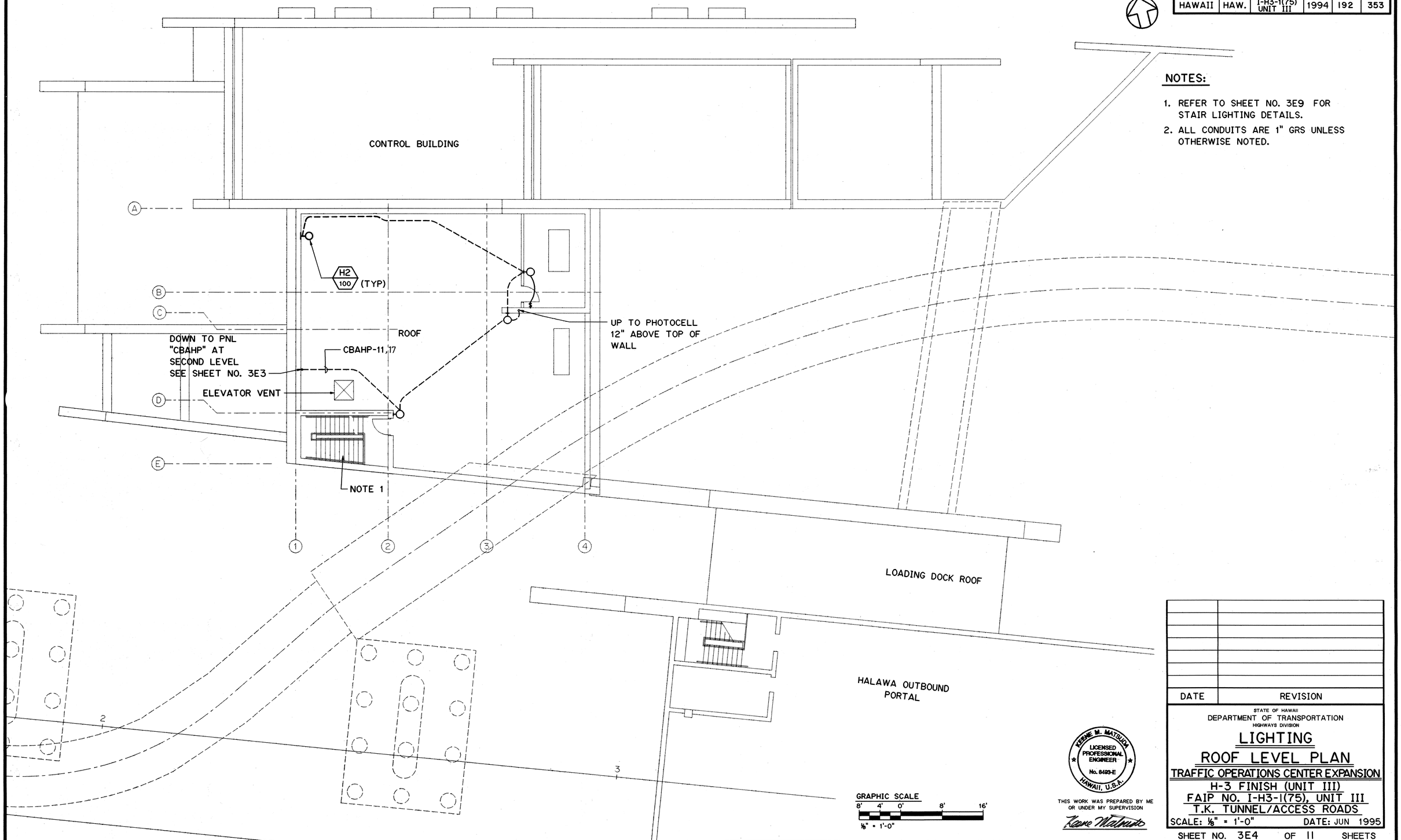

NOTES:

1. REFER TO SHEET NO. 3E9 FOR STAIR LIGHTING DETAILS.
2. ALL CONDUITS ARE 1" GRS UNLESS OTHERWISE NOTED.

ORIGINAL PLAN		DATE
	SURVEY PLOTTED BY	
	DRAWN BY	R. J. HERNANDEZ NOV 94
NOTE BOOK	TRACED BY	
	DESIGNED BY	T. SANCHEZ NOV 94
NO.	QUANTITIES BY	
	CHECKED BY	K. MATSUDA DEC 94

DATE	REVISION

STATE OF HAWAII
DEPARTMENT OF TRANSPORTATION
HIGHWAYS DIVISION

LIGHTING

ROOF LEVEL PLAN

TRAFFIC OPERATIONS CENTER EXPANSION
H-3 FINISH (UNIT III)
FAIP NO. I-H3-1(75), UNIT III
T.K. TUNNEL/ACCESS ROADS

SCALE: 1/8" = 1'-0" DATE: JUN 1995

KEENE M. MATSUDA
LICENSED PROFESSIONAL ENGINEER
No. 8493-E
HAWAII, U.S.A.

THIS WORK WAS PREPARED BY ME OR UNDER MY SUPERVISION

Keene Matsuda

SHEET NO. 3E4 OF 11 SHEETS

HERNANDEZ ELWOOD::2410:[DWG.ELECT]E014.FGB71 26JAN95-15.15.20

192

FED. ROAD DIST. NO.	STATE	FED. AID PROJ. NO.	FISCAL YEAR	SHEET NO.	TOTAL SHEETS
HAWAII	HAW.	I-H3-1(75) UNIT III	1994	193	353

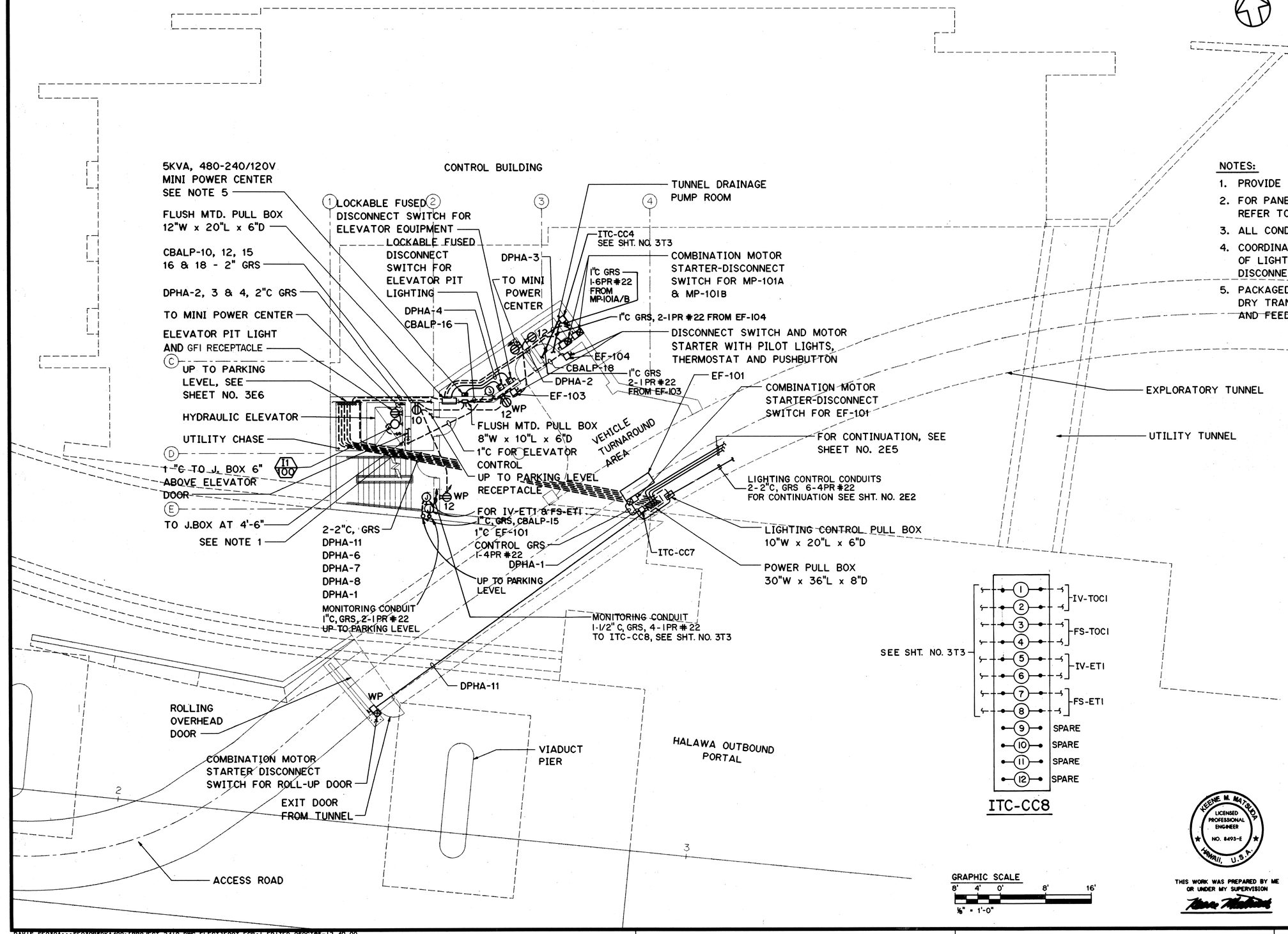

NOTES:

1. PROVIDE 2 - 2" SPARE CONDUITS.
2. FOR PANEL "DPHA" FEEDER WIRES AND CONDUIT SIZES, REFER TO SHEET NO. 2E1.
3. ALL CONDUITS ARE 1" GRS UNLESS OTHERWISE NOTED.
4. COORDINATE WITH ELEVATOR VENDOR FOR LOCATIONS OF LIGHTING FIXTURE, LIGHT SWITCH, RECEPTACLE(S), DISCONNECT SWITCH, EQUIPMENT AND PREMISE WIRING.
5. PACKAGED UNIT INCLUDES 480V PRIMARY BREAKER, DRY TRANSFORMER, 240V SECONDARY MAIN BREAKER AND FEEDER BREAKERS.

FOR DETAIL AS-BUILT INFORMATION REFER TO CONSTRUCTION SUBMITTALS

DATE	REVISION
10/27/95	ADDENDUM 2- ADDED LTG. CONTROL WIRE SIZE & ADDED ITC-CC4, 7 & 8
10/13/95	ADDENDUM 1

STATE OF HAWAII
DEPARTMENT OF TRANSPORTATION
HIGHWAYS DIVISION

POWER
LOWER LEVEL PLAN
TRAFFIC OPERATIONS CENTER EXPANSION
H-3 FINISH (UNIT III)
FAIP NO. I-H3-I(75), UNIT III
T.K. TUNNEL/ACCESS ROADS

SCALE: 1/8" = 1'-0" DATE: JUN 1995

KEENE M. MATSUDA LICENSED PROFESSIONAL ENGINEER NO. 8493-E HAWAII, U.S.A.

THIS WORK WAS PREPARED BY ME OR UNDER MY SUPERVISION

SHEET NO. 3E5 OF 11 SHEETS

ADD. 193

ORIGINAL PLAN		DATE
	SURVEY PLOTTED BY	
	DRAWN BY R. J. HERNANDEZ	NOV 94
	TRACED BY	
	DESIGNED BY T. SANCHEZ	NOV 94
NOTE BOOK	QUANTITIES BY	
	CHECKED BY K. MATSUDA	DEC 94
NO.		

DAVIS SF030A:::SF030B$DKA400:[PROJECT.2416.DWG.ELECTJE007.FGB7] EDITED 060CT95-12.49.00

FED. ROAD DIST. NO.	STATE	FED. AID PROJ. NO.	FISCAL YEAR	SHEET NO.	TOTAL SHEETS
HAWAII	HAW.	I-H3-1(75) UNIT III	1994	194	353

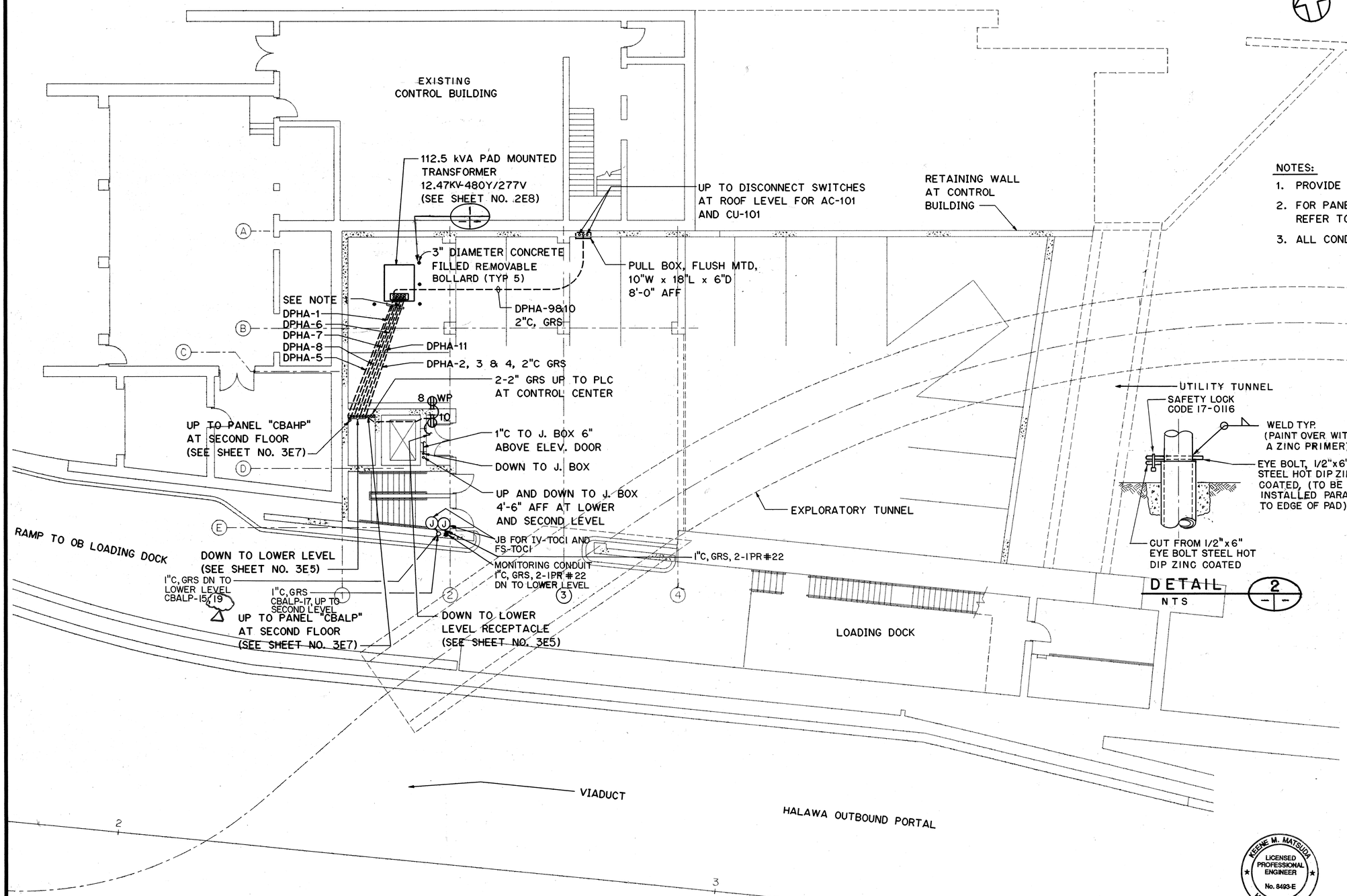

NOTES:

1. PROVIDE 2 - 2" SPARE CONDUITS.
2. FOR PANEL "DPHA" FEEDER WIRES AND CONDUITS SIZES, REFER TO SHEET NO. 2E1.
3. ALL CONDUITS ARE 1" GRS UNLESS OTHERWISE NOTED.

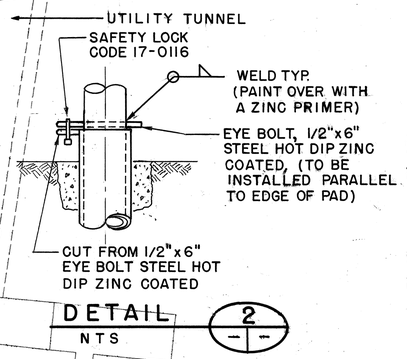

DETAIL 2
NTS

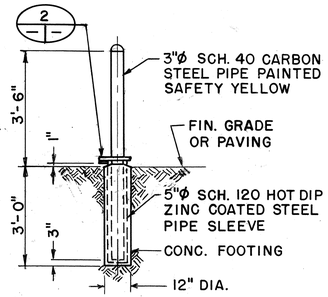

REMOVABLE BOLLARD

DETAIL 1
NTS

DATE	REVISION
5/29/97	DCN75-019: ADDED CIRCUIT FOR PARKING LEVEL POWER DOOR LOCK
10/27/95	ADDENDUM 2-ADDED POWER & MONITORING CONDUITS FOR IV AND FS
10/13/[illegible]	ADDENDUM 1

STATE OF HAWAII
DEPARTMENT OF TRANSPORTATION
HIGHWAYS DIVISION

POWER
PARKING LEVEL PLAN
TRAFFIC OPERATIONS CENTER EXPANSION
H-3 FINISH (UNIT III)
FAIP NO. I-H3-1(75), UNIT III
T.K. TUNNEL/ACCESS ROADS

SCALE: 1/8" = 1'-0" DATE: JUN 1995

GRAPHIC SCALE
8' 4' 0' 8' 16'
1/8" = 1'-0"

KEENE M. MATSUDA
LICENSED PROFESSIONAL ENGINEER
No. 8493-E
HAWAII, U.S.A.

THIS WORK WAS PREPARED BY ME OR UNDER MY SUPERVISION

Keene Matsuda

ORIGINAL PLAN		DATE
	SURVEY PLOTTED BY	
	DRAWN BY R. J. HERNANDEZ	NOV 94
NOTE BOOK	TRACED BY	
	DESIGNED BY T. SANCHEZ	NOV 94
	QUANTITIES BY	
NO.	CHECKED BY K. MATSUDA	DEC 94

SHEET NO. 3E6 OF 11 SHEETS

HERNANDEZ ELWOOD::2410:DWG.ELECT3E008.FGB71 27JAN95-10.11.00

C.O. ADD. 194

FED. ROAD DIST. NO.	STATE	FED. AID PROJ. NO.	FISCAL YEAR	SHEET NO.	TOTAL SHEETS
HAWAII	HAW.	I-H3-1(75) UNIT III	1994	195	353

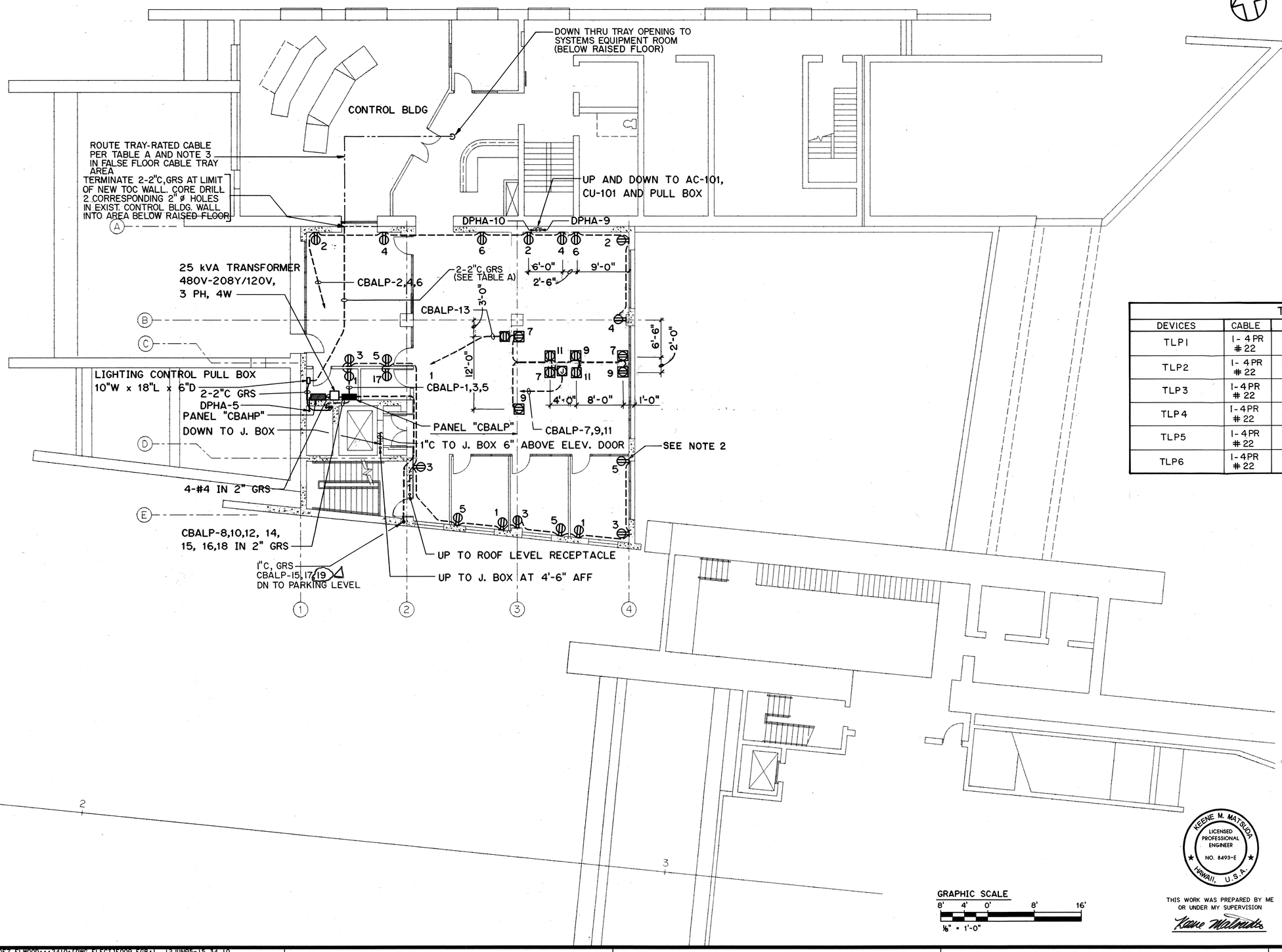

NOTE:

1. ALL CONDUITS ARE 1" GRS UNLESS OTHERWISE NOTED.
2. CHIP CONCRETE TO INSTALL RECEPTACLE WITH PLASTER RING FLUSH, TYPICAL AT CONCRETE WALL.
3. COIL & TIE OFF 150' OF EACH LIGHTING CONTROL CABLE ENTERING SYSTEMS EQUIPMENT ROOM.

TABLE A

DEVICES	CABLE	POINT TYPE	NAME	TERMINATION
TLP1	1-4PR #22	CONTROL	LIGHTS ON LIGHTS OFF	RTU-EG SYSTEMS EQUIPMENT ROOM (SEE NOTE 3)
TLP2	1-4PR #22	CONTROL	LIGHTS ON LIGHTS OFF	
TLP3	1-4PR #22	CONTROL	LIGHTS ON LIGHTS OFF	
TLP4	1-4PR #22	CONTROL	LIGHTS ON LIGHTS OFF	
TLP5	1-4PR #22	CONTROL	LIGHTS ON LIGHTS OFF	
TLP6	1-4PR #22	CONTROL	LIGHTS ON LIGHTS OFF	

DATE	REVISION
5/29/97	DCN 75-019: ADDED CIRCUIT FOR PARKING LEVEL POWER DOOR LOCK
10/27/95	ADDENDUM 2 - ADDED 1"C TO IV/FS-TOCI AND IV/FS-ETI, ADDED TABLE A AND NOTE 3, CLARIFICATION OF TUNNEL LIGHTING CONTROL CABLE ROUTING
10/13/95	ADDENDUM 1

ORIGINAL PLAN	
SURVEY PLOTTED BY	
DRAWN BY	R. J. HERNANDEZ — NOV 94
TRACED BY	
DESIGNED BY	T. SANCHEZ — NOV 94
QUANTITIES BY	
CHECKED BY	K. MATSUDA — DEC 94
NOTE BOOK NO.	

GRAPHIC SCALE
8' 4' 0' 8' 16'
⅛" = 1'-0"

KEENE M. MATSUDA
LICENSED PROFESSIONAL ENGINEER
NO. 8493-E
HAWAII, U.S.A.

THIS WORK WAS PREPARED BY ME OR UNDER MY SUPERVISION

STATE OF HAWAII
DEPARTMENT OF TRANSPORTATION
HIGHWAYS DIVISION

POWER
SECOND LEVEL PLAN
TRAFFIC OPERATIONS CENTER EXPANSION
H-3 FINISH (UNIT III)
FAIP NO. I-H3-1(75), UNIT III
T.K. TUNNEL/ACCESS ROADS

SCALE: ⅛" = 1'-0" DATE: JUN 1995

SHEET NO. 3E7 OF 11 SHEETS

HERNANDEZ ELWOOD:::2410:DWG.ELECTJE009.FGB71 12JUN95-15.34.10

C.O. ADD. 195

FED. ROAD DIST. NO.	STATE	FED. AID PROJ. NO.	FISCAL YEAR	SHEET NO.	TOTAL SHEETS
HAWAII	HAW.	I-H3-1(75) UNIT III	1994	196	353

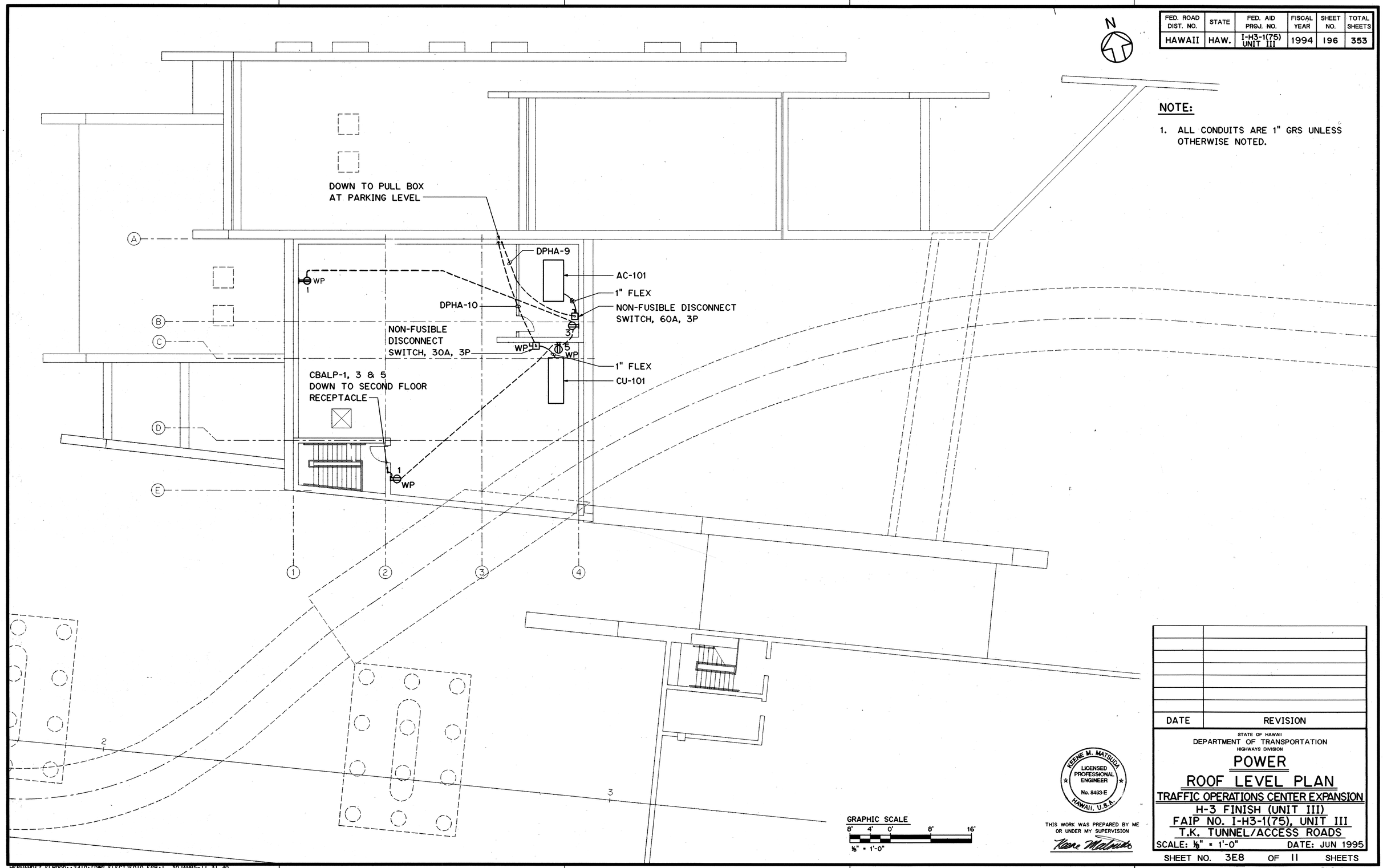

NOTE:

1. ALL CONDUITS ARE 1" GRS UNLESS OTHERWISE NOTED.

GRAPHIC SCALE

8' 4' 0' 8' 16'

⅛" = 1'-0"

KEENE M. MATSUDA
LICENSED PROFESSIONAL ENGINEER
No. 8493-E
HAWAII, U.S.A.

THIS WORK WAS PREPARED BY ME OR UNDER MY SUPERVISION

Keene Matsuda

DATE	REVISION

STATE OF HAWAII
DEPARTMENT OF TRANSPORTATION
HIGHWAYS DIVISION

POWER

ROOF LEVEL PLAN

TRAFFIC OPERATIONS CENTER EXPANSION
H-3 FINISH (UNIT III)
FAIP NO. I-H3-1(75), UNIT III
T.K. TUNNEL/ACCESS ROADS

SCALE: ⅛" = 1'-0" DATE: JUN 1995

SHEET NO. 3E8 OF 11 SHEETS

		DATE
SURVEY PLOTTED BY		
DRAWN BY	R. J. HERNANDEZ	NOV 94
TRACED BY		
DESIGNED BY	T. SANCHEZ	NOV 94
QUANTITIES BY		
CHECKED BY	K. MATSUDA	DEC 94

ORIGINAL PLAN

NOTE BOOK

NO.

HERNANDEZ ELWOOD::2410:DWG.ELECTJEOTO.FGB71 30JAN95-11.31.40

FED. ROAD DIST. NO.	STATE	FED. AID PROJ. NO.	FISCAL YEAR	SHEET NO.	TOTAL SHEETS
HAWAII	HAW.	I-H3-1(75) UNIT III	1994	197	353

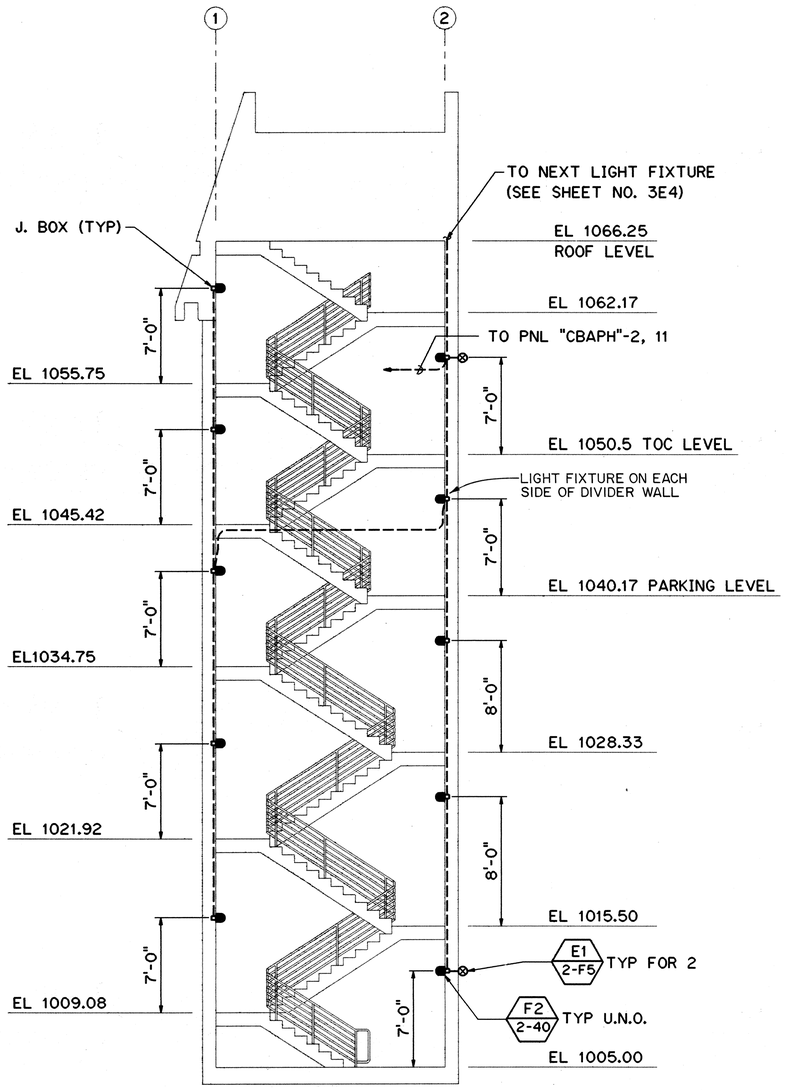

SECTION D
SCALE: 3/16" = 1'-0"

NOTES:

1. ALL CONDUITS ARE 1" GRS UNLESS OTHERWISE NOTED.

GRAPHIC SCALE
8' 4' 0' 8' 16'
1/8" = 1'-0"

KEENE M. MATSUDA
LICENSED PROFESSIONAL ENGINEER
NO. 8493-E
HAWAII, U.S.A.

THIS WORK WAS PREPARED BY ME OR UNDER MY SUPERVISION

DATE	REVISION

STATE OF HAWAII
DEPARTMENT OF TRANSPORTATION
HIGHWAYS DIVISION

LIGHTING
SECTION & DETAILS
TRAFFIC OPERATIONS CENTER EXPANSION
H-3 FINISH (UNIT III)
FAIP NO. I-H3-1(75), UNIT III
T.K. TUNNEL/ACCESS ROADS

SCALE: AS SHOWN DATE: JUN 1995

SHEET NO. 3E9 OF 11 SHEETS

ORIGINAL PLAN		DATE
SURVEY PLOTTED BY	R. J. HERNANDEZ	NOV 94
DRAWN BY	" "	
TRACED BY	T. SANCHEZ	NOV 94
DESIGNED BY	" "	
QUANTITIES BY	K. MATSUDA	DEC 94
CHECKED BY	" "	
NOTE BOOK		
NO.		

HERNANDEZ ELWOOD:::2410:1DWG.ELECTJE030.FGB71 12JUN95-15:59:00

FED. ROAD DIST. NO.	STATE	FED. AID PROJ. NO.	FISCAL YEAR	SHEET NO.	TOTAL SHEETS
HAWAII	HAW.	I-H3-1(75) UNIT III	1994	198	353

LIGHTING FIXTURE SCHEDULE

SYMBOL	DESCRIPTION	MANUFACTURER	LAMP	INPUT POWER	INPUT VOLTAGE
F1 / 2-40	WRAP AROUND LIGHTING FIXTURE SURFACE MOUNTED	DAY-BRITE LIGHTING KEYSTONE	2-F40T12 CW/RS	100VA	277V
F2 / 2-40	SAME AS F1 TWO LAMP WALL MOUNTED COMPLETE WITH BATTERY AND CHARGERS FOR 90 MIN. OF EMERGENCY OPERATION FOR ONE LAMP	DAY-BRITE LIGHTING KEYSTONE	2-F40T12 CW/RS	100VA	277V
F3 * / 2-40	PARABOLIC LIGHTING FIXTURE HEAT REMOVAL TROFFER, RECESSED	LITHONIA OPTIMAX KEENE MODULINE/HR HUBBEL PARABOLITE	2-F40T12 CW/RS	100VA	277V
F4 * / 2-40	SAME AS F3 COMPLETE WITH BATTERY AND CHARGERS FOR 90 MIN. OF EMERGENCY OPERATION FOR ONE LAMP	LITHONIA OPTIMAX KEENE MODULINE/HR HUBBEL PARABOLITE	2-F40T12 CW/RS	100VA	277V
F5 / 2-40	SURFACE MOUNTED LIGHTING FIXTURES ENCLOSED & GASKETED, WEATHER PROOF	NU-ART MTL-1-48+48-96-RS1500MA-277	2-F40T12 CW/RS	100VA	277V
F6 / 2-40	SAME AS F5 COMPLETE WITH BATTERY AND CHARGERS FOR 90 MIN. OF EMERGENCY OPERATION FOR ONE LAMP	NU-ART MTL-1-48+48-96-RS1500MA-277	2-F40T12/ CW/RS	100VA	277V
- / -	NOT USED	-	-	-	-
- / -	NOT USED	-	-	-	-
I1 / 100	ELEVATOR PIT LIGHTING FIXTURE WALL MOUNTED	PRESCOLITE WB-2 LITHONIA COLUMBIA	100W	100VA	120V
- / -	NOT USED	-	-	-	-
H1 / 100	HID LIGHTING FIXTURE WALL MOUNTED	LITHONIA WALLPAK DEVINE WALLPAK HOLOPHANE WALLPAK	100W MH	145VA	277V
H2 / 100	ROOF LEVEL HID LIGHTING FIXTURE WALL MOUNTED	LITHONIA TWH100S EMCO GENERAL ELECTRIC	100W HPS	145VA	277V
H3 / 150	TANK ACCESS ROMM LIGHTING FIXTURE CEILING MOUNTED	LITHONIA-THS150 EMCO GENERAL ELECTRIC	150W HPS	200VA	277V
- / -	NOT USED	-	-	-	-
E1 / 2-F5	EXIT SIGN FIXTURE WALL MOUNTED, COMPLETE WITH BATTERY AND CHARGERS	LITHONIA SYLVANIA GENERAL ELECTRIC	2-F5	12VA	277V
E2 / 2-F5	EXIT SIGN FIXTURE ENCLOSED & GASKETED, COMPLETE WITH BATTERY AND CHARGERS.	LITHONIA SYLVANIA GENERAL ELECTRIC	2-F5	12VA	277V
E3 / -	SURFACE MOUNTED SELF LUMINOUS EXIT SIGN	SPL 710A-G-SS	-	-	-

* - WITH ELECTRONIC BALLAST SUITABLE FOR OPERATION BY DIMMER SWITCH

ORIGINAL PLAN	SURVEY PLOTTED BY	DATE
	DRAWN BY R. J. HERNANDEZ	NOV 94
	TRACED BY	"
NOTE BOOK	DESIGNED BY T. SANCHEZ	NOV 94
	QUANTITIES BY	"
NO.	CHECKED BY K. MATSUDA	DEC 94

KEENE M. MATSUDA LICENSED PROFESSIONAL ENGINEER NO. 8493-E HAWAII, U.S.A.

THIS WORK WAS PREPARED BY ME OR UNDER MY SUPERVISION

Keene Matsuda

DATE	REVISION

STATE OF HAWAII
DEPARTMENT OF TRANSPORTATION
HIGHWAYS DIVISION

LIGHTING FIXTURE SCHEDULE

TRAFFIC OPERATIONS CENTER EXPANSION
H-3 FINISH (UNIT III)
FAIP NO. I-H3-1(75), UNIT III
T.K. TUNNEL/ACCESS ROADS

SCALE: AS NOTED DATE: JUN 1995

SHEET NO. 3E10 OF 11 SHEETS

HERNANDEZ ELWOOD:::2410:[DWG.ELECT]E024.FGB;1 12JUN95-15.47.10

FED. ROAD DIST. NO.	STATE	FED. AID PROJ. NO.	FISCAL YEAR	SHEET NO.	TOTAL SHEETS
HAWAII	HAW.	I-H3-1(75) UNIT III	1994	199	353

SYSTEM: 480Y/277V, 100A, 3Ø, 4W PANEL - CBAHP
MAINS: 100A, 3P
SHORT CIRCUIT RATING: 22KAIC

PANEL LOCATION: LEVEL 2, TRAFFIC OPERATION CENTER
SUPPLY LOCATION: T.O.C. EXPANSION, PARKING LEVEL HALAWA SITE, PNL "DPHA"

SERVICE	CKT. NO.	LOAD kVA A	LOAD kVA B	LOAD kVA C	CIRCUIT BREAKER FRAME	CIRCUIT BREAKER POLES	CIRCUIT BREAKER TRIP	WIRE AWG				WIRE AWG	CIRCUIT BREAKER TRIP	CIRCUIT BREAKER POLES	CIRCUIT BREAKER FRAME	LOAD kVA A	LOAD kVA B	LOAD kVA C	CKT. NO.	SERVICE
LTG LOWER LVL	1	0.72			100	1	20	12				12	20	1	100	1.2			2	STAIR LTG
LTG, PARKING	3		1.14		100	1	20	12				10	40	1	100			8.3	4	PNL CBALP
LTG, PARKING	5			1.90	100	1	20	12									8.3		6	↓
LTG, SECOND LVL	7	1.4			100	1	20	12								8.3			8	↓
LTG, SECOND LVL	9		2.1		100	1	20	12				12	20	1	100		0.20		10	LTG ELEV RM
LTG, ROOF LVL	11			0.60	100	1	20	12					40	1	100				12	SPARE
SPARE	13				100	1	20												14	↓
SPARE	15				100	1	20												16	↓
LTG. MECH, RM	17			0.15	100	1	20	12					20						18	SPARE
SUBTOTAL		2.1	3.2	1.7												9.5	8.5	8.3		

	A	B	C
	11.6	11.7	10.0
	11.6	11.7	10.0

TOTAL CONNECTED = 33.3kVA
ESTIMATED MAXIMUM DEMAND = 33.3kVA

SYSTEM: 208Y/120V, 100A, 3Ø, 4W PANEL - CBALP
MAINS: 100A, 3P
SHORT CIRCUIT RATING: 10KAIC

PANEL LOCATION: LEVEL 2, TRAFFIC OPERATION CENTER
SUPPLY LOCATION: LEVEL 2, TRAFFIC OPERATION CENTER PNL "CBAHP" VIA XFMR

SERVICE	CKT. NO.	LOAD kVA A	LOAD kVA B	LOAD kVA C	CIRCUIT BREAKER FRAME	CIRCUIT BREAKER POLES	CIRCUIT BREAKER TRIP	WIRE AWG				WIRE AWG	CIRCUIT BREAKER TRIP	CIRCUIT BREAKER POLES	CIRCUIT BREAKER FRAME	LOAD kVA A	LOAD kVA B	LOAD kVA C	CKT. NO.	SERVICE
RECEPTACLE	1	1.08			100	1	20	12				12	20	1	100	0.54			2	RECEPTACLE
RECEPTACLE	3		0.90		100	1	20	12				12	20	1	100		0.54		4	RECEPTACLE
RECEPTACLE	5			0.90	100	1	20	12				12	20	1	100			0.36	6	RECEPTACLE
RECEPTACLE	7	1.00			100	1	20	12				12	20	1	100	0.46			8	RECEPTACLE
RECEPTACLE	9		1.00		100	1	20	12				12	20	1	100		0.54		10	RECEPTACLE
RECEPTACLE	11			1.00	100	1	20	12				12	20	1	100			0.54	12	RECEPTACLE
RECEPTACLE	13	1.00			100	1	20	12				12	20	1	100	0.50			14	ELEV. LTG.
IV-ET1, FS-ET1	15		0.20		100	1	20	12				12	20	1	100		0.25		16	EF-103
IV-TOC1, FS-TOC1	17			0.20	100	1	20	12					20	1	100			0.25	18	EF-104
POWER DOOR LOCK PARKING LEVEL	19			0.1	100	1	20	12					20	1	100				20	SPARE
SPARE	21				100	1	20						20	1	100				22	SPARE
SPARE	23				100	1	20						20	1	100				24	SPARE
	25																			
	27																			
	29																			
SUBTOTAL		3.1	2.1	2.2												1.5	1.3	1.2		

	A	B	C
	4.6	3.4	3.4
	4.6	3.4	3.4

TOTAL CONNECTED = 11.4 kVA
ESTIMATED MAXIMUM DEMAND = 11.4 kVA

5/29/97	DCN 75-019: IDENTIFIED CIRCUIT FOR TOC PARKING LEVEL POWER DOOR LOCK PANEL CBALP
10/27/95	ADDENDUM 2 - ADDED IV & FS TO CBALP
DATE	REVISION

STATE OF HAWAII
DEPARTMENT OF TRANSPORTATION
HIGHWAYS DIVISION

PANEL SCHEDULES

TRAFFIC OPERATIONS CENTER EXPANSION
H-3 FINISH (UNIT III)
FAIP NO. I-H3-1(75), UNIT III
T.K. TUNNEL/ACCESS ROADS

SCALE: NONE DATE: JUN 1995

KEENE M. MATSUDA
LICENSED PROFESSIONAL ENGINEER
NO. 8493-E
HAWAII, U.S.A.

THIS WORK WAS PREPARED BY ME OR UNDER MY SUPERVISION

Keene Matsuda

SHEET NO. 3E11 OF 11 SHEETS

C.O. ADD. 199

ORIGINAL PLAN		
	SURVEY PLOTTED BY	
	DRAWN BY R. J. HERNANDEZ	DATE NOV 94
NOTE BOOK	TRACED BY "	" NOV 94
	DESIGNED BY T. SANCHEZ	
	QUANTITIES BY "	" NOV 94
NO.	CHECKED BY K. MATSUDA	" DEC 94

HERNANDEZ ELWOOD:::2410:[DWG.ELECT]E029.FGB;1 12JUN95-15.41.50

FED. ROAD DIST. NO.	STATE	FED. AID PROJ. NO.	FISCAL YEAR	SHEET NO.	TOTAL SHEETS
HAWAII	HAW.	I-H3-1(75) UNIT III	1994	200	353

XREF LIST:
TOC-BROR

CONDUIT/CABLE SCHEDULE

RUN NO.	CIRC. IDENT.	FROM	TO	SIZE	CABLE QUANTITY
200	TV	TV-CE1	JB-200	1.00	1 – CCTV VIDEO, POWER AND CONTROL CABLE
200	TV	JB-200	JB-201	1.00	1 – CCTV VIDEO, POWER AND CONTROL CABLE
200	TV	TV-CE2	JB-201	1.00	1 – CCTV VIDEO, POWER AND CONTROL CABLE
200	TV	JB-201	JB-202	1.25	2 – CCTV VIDEO, POWER AND CONTROL CABLES
201	TV	TV-P1	JB-202	1.00	1 – CCTV VIDEO, POWER AND CONTROL CABLE
202	TV	JB-202	RCF	1.50	3 – CCTV VIDEO, POWER AND CONTROL CABLES
202	TV	RCF	EXISTING CCTV CABINET	CABLE TRAY	3 – CCTV VIDEO, POWER AND CONTROL CABLES
205	S&C	ITC-CC4	JB-205	1.25	1 – 11 PR PUMP CABLE, 3 – 1 PR FAN CABLE
205	S&C	EC-TOC2	JB-205	1.50	1 – 15 PR ELEVATOR CABLE, 1 – TELEPHONE CABLE
205	S&C	JB-205	JB-209	2.00	1-15 PR ELEVATOR CABLE, 1-6 PR PUMP CABLE, 1-4 & 2-1 PR FAN CABLE, 1 TEL. CABLE
205	S&C	JB-209	JB-206	2.50	1-4 & 2-1 PR FAN CABLES, 1-15 PR ELEVATOR CABLE, 1-6 PR PUMP CABLE, 4-1 PR SUPPLY VALVE & FLOW SWITCH MONITORING CABLE, 1 TELEPHONE CABLE
205	S&C	ITC-CC7	JB-205	1.00	1 – 4 PR FAN CABLE
206	S&C	ITC-CC6	JB-208	1.25	1 – 11 PR HVAC CABLE
206	S&C	JB-208	JB-207	1.25	1 – 11 PR HVAC CABLE
206	S&C	JB-207	JB-206	1.25	1 – 11 PR HVAC CABLE
207	S&C	JB-206	RCF	3.00	1 – 6 PR PUMP CABLE, 1 – 11 PR HVAC CABLE, 1 – 15 PR ELEVATOR CABLE, 1-4 & 2-1 PR FAN CABLES, 4-1 PR SUPPLY VALVE & FLOW SWITCH MONITORING CABLE
207	S&C	RCF	EXISTING RTU-EG	CABLE TRAY	1 – 6 PR PUMP CABLE, 1 – 11 PR HVAC CABLE, 1 – 15 PR ELEVATOR CABLE, 1-4 & 2-1 PR FAN CABLES, 1 PR SUPPLY VALVE MONITORING CABLE, 1- TELEPHONE CABLE
208	S&C	ITC-CC8	JB-209	0.75	4-1 PR SUPPLY VALVE & FLOW SWITCH MONITORING CABLE
226	RADIO	JB-290	JB-293	2.00	800 MHZ ANTENNA CABLES
226	RADIO	JB-293	JB-295	2.00	800 MHZ ANTENNA CABLES
226	RADIO	JB-295	RCF	2.00	800 MHZ ANTENNA CABLES
226	RADIO	RCF	RADIO EQUIP	CABLE TRAY	800 MHZ ANTENNA CABLES
227	RADIO	JB-291	JB-292	2.00	RADIO REBROADCAST CABLES
227	RADIO	JB-292	JB-294	2.00	RADIO REBROADCAST CABLES
227	RADIO	JB-294	JB-296	2.00	RADIO REBROADCAST CABLES
227	RADIO	JB-296	RCF	2.00	RADIO REBROADCAST CABLES
227	RADIO	RCF	RADIO EQUIP	CABLE TRAY	RADIO REBROADCAST CABLES
254	COMM	T-221	JB-254	0.75	1 – 4 PR TELEPHONE CABLE, 1 – 2 MM COMPUTER FIBER
254	COMM	T-222	JB-254	0.75	1 – 4 PR TELEPHONE CABLE, 1 – 2 MM COMPUTER FIBER
254	COMM	T-223	JB-254	0.75	1 – 4 PR TELEPHONE CABLE, 1 – 2 MM COMPUTER FIBER
254	COMM	JB-254	JB-255	1.25	3 – 4 PR TELEPHONE CABLE, 3 – 2 MM COMPUTER FIBER
254	COMM	WIRE MOLD	JB-255	2.00	6 – 4 PR TELEPHONE CABLE, 6 – 2 MM COMPUTER FIBER
254	COMM	JB-255	JB-256	2.00	9 – 4 PR TELEPHONE CABLE, 9 – 2 MM COMPUTER FIBER
254	COMM	T-220	JB-256	0.75	1 – 4 PR TELEPHONE CABLE, 1 – 2 MM COMPUTER FIBER
255	COMM	JB-256	RCF	2.00	10 – 4 PR TELEPHONE CABLE, 10 – 2 MM COMPUTER FIBER
255	COMM	RCF	TEL MDF	CABLE TRAY	10 – 4 PR TELEPHONE CABLE, 10 – 2 MM COMPUTER FIBER
270	INT	ED-CE1, ID-CE1	JB-273	1.00	2 – INTRUSION DETECTOR CABLES
270	INT	ID-CE2	JB-273	0.50	1 – INTRUSION DETECTOR CABLE
270	INT	ES-CE1, DS-CE1	JB-273	1.00	2 – INTRUSION DETECTOR CABLES
270	INT	CR-CE1	1-CE1	1.00	1 – CARD KEY ACCESS AND POWER CABLE, 2-INTRUSION DETECTOR CABLES (ES-CE1 & ED-CE1)
270	INT	I-CE1	JB-273	1.50	1 – INTERCOM CABLE, 1 – CARD KEY ACCESS AND POWER CABLE, 2 – INTRUSION DETECTOR CABLES (ES-CE1 & ED-CE1)
270	INT	JB-273	JB-274	1.50	3 – INTRUSION DETECTOR CABLES, 1 – INTERCOM CABLE, 1 – CARD KEY ACCESS AND POWER CABLE
270	INT	ID-206	JB-274	0.50	1 – INTRUSION DETECTOR CABLE
270	INT	ID-205	JB-274	0.50	1 – INTRUSION DETECTOR CABLE
270	INT	JB-274	JB-276	1.50	5 – INTRUSION DETECTOR CABLES, 1 – INTERCOM CABLE, 1 – CARD KEY ACCESS AND POWER CABLE
270	INT	ID-203	JB-275	0.50	1 – INTRUSION DETECTOR CABLE
270	INT	ID-204	JB-275	0.50	1 – INTRUSION DETECTOR CABLE
270	INT	JB-275	JB-276	0.75	2 – INTRUSION DETECTOR CABLES
270	INT	JB-276	JB-280	2.00	7 – INTRUSION DETECTOR CABLES, 1 – INTERCOM CABLE, 1 – CARD KEY ACCESS AND POWER CABLE
271	INT	ES-224, DS-224 ED-224, ID-224	JB-279	1.00	4 – INTRUSION DETECTOR CABLES (INCLUDES CARD KEY)
271	INT	JB-279	JB-279A	1.00	4 – INTRUSION DETECTOR CABLES (INCLUDES CARD KEY)
271	INT	ES-223, DS-223 ED-223, ID-223	JB-279A	1.00	4 – INTRUSION DETECTOR CABLES (INCLUDES CARD KEY)
271	INT	JB-279A	JB-277	1.50	8 – INTRUSION DETECTOR CABLES (INCLUDES CARD KEY)
271	INT	ID-222	JB-277	0.50	1 – INTRUSION DETECTOR CABLES
271	INT	JB-277	JB-278	1.50	9 – INTRUSION DETECTOR CABLES (INCLUDES CARD KEY)
271	INT	ES-221, DS-221 ED-221, ID-221	CR-221	1.00	4 – INTRUSION DETECTOR CABLES (INCLUDES CARD KEY)

GENERAL NOTES

1. CONTRACTOR SHALL PROVIDE 1-10 PR AND 1-5 PR CABLE TO MEET THE 15PR ELEVATOR CABLE REQUIREMENT.
2. CONTRACTOR SHALL PROVIDE 1-10 PR AND ONE SINGLE PAIR CABLE TO MEET THE 11 PR HVAC CABLE REQUIREMENT.
3. USE OF 0.5 INCH CONDUITS PERMITTED BY RFI NO. 62.

CONSTRUCTION NOTES

(1) INSTALL CCTV CAMERA ON VERTICAL SURFACE PER DETAIL NO. 1 SHOWN ON SHEET NO. 2T16.

(3) INSTALL CARD READER, INTERCOM AND ASSOCIATED EQUIPMENT AND WIRE ACCORDING TO INTRUSION ALARM SYSTEM WIRING DIAGRAM SHOWN ON SHEET NO. 3T7 AND DETAIL 1 ON SHEET NO. 3T10.

(4) INSTALL END OF LINE RESISTOR AT THIS DEVICE.

(5) INSTALL FIRE ALARM PULL STATION WITH AUDIBLE/VISUAL ALARM AS SHOWN ON SHEET NO. 3T9.

(6) INSTALL TWO PIECE SURFACE METAL RACEWAY WITH COMBINATION DUPLEX RECEPTACLE AND TELEPHONE/COMPUTER JACKS FOR SIX LOCATIONS. THESE LOCATIONS TO BE FIELD ADJUSTABLE FOR THE FULL LENGTH OF THE RACEWAY.

(7) NOT USED

(8) COIL AND TIE OFF 150' OF EACH CABLE ENTERING THE EQUIPMENT ROOM. CONTRACTOR SHALL TAG EACH PAIR WITH APPROPRIATE CONTACT NUMBER.

(9) STRAP CONDUIT ONTO WALL 2' FROM TOP OF WALL.

(10) CORE DRILL THRU EXISTING WALL AND GROUT CONDUIT. INSTALL WIRING UNDER RAISED FLOOR IN CONTROL ROOM.

NOTE: ALL CONDUIT AND CABLES INDICATED ON CONDUIT AND CABLE SCHEDULE TO BE PROVIDED AND INSTALLED AS PART OF THIS CONTRACT.

FOR DETAIL AS-BUILT INFORMATION REFER TO CONSTRUCTION SUBMITTALS

DATE	REVISION
10/27/95	ADDENDUM 2 - REVISED CONST. NOTE 8 AND CONDUIT RUNS 205, 207 AND 208
10/13/95	ADDENDUM 1

STANLEY M.O.T. CHING
LICENSED PROFESSIONAL ENGINEER
No. 6312-C
HAWAII, U.S.A.

THIS WORK WAS PREPARED BY ME OR UNDER MY SUPERVISION

Stanley M.O.T. Ching

STATE OF HAWAII
DEPARTMENT OF TRANSPORTATION
HIGHWAYS DIVISION

CONDUIT/CABLE SCHEDULE & NOTES – 1, SYSTEMS

TRAFFIC OPERATIONS CENTER EXPANSION
H-3 FINISH (UNIT III)
FAIP NO. I-H3-1(75), UNIT III
T.K. TUNNEL/ACCESS ROADS

SCALE: NONE DATE: JUN 1995

SHEET NO. 3T1 OF 10 SHEETS

ADD. 200

ORIGINAL PLAN
NOTE BOOK No.
SURVEY PLOTTED BY
DRAWN BY P. R. E. HITT DATE 10/94
TRACED BY " " " "
DESIGNED BY D. D. ANDERSON 10/94
QUANTITIES BY " " " "
CHECKED BY " " " "

P:\H3\CONT.75\UNIT-III\TOC-EXP\H3-3T02.DWG

FED. ROAD DIST. NO.	STATE	FED. AID PROJ. NO.	FISCAL YEAR	SHEET NO.	TOTAL SHEETS
HAWAII	HAW.	I-H3-1(75) UNIT III	1994	201	353

CONDUIT/CABLE SCHEDULE

RUN NO.	CIRC. IDENT.	FROM	TO	SIZE	CABLE QUANTITY
271	INT	CR-221	JB-278	2.00	6 – INTRUSION DETECTOR CABLES, 1 – INTERCOM CABLE, 1 – CARD KEY ACCESS AND POWER CABLE
271	INT	JB-278	JB-280	2.00	7 – INTRUSION DETECTOR CABLES, 1 – INTERCOM CABLE, 1 – CARD KEY ACCESS AND POWER CABLE
272	INT	ID-263	JB-284	0.50	1 – INTRUSION DETECTOR CABLE
272	INT	ID-262	JB-284	0.75	2 – INTRUSION DETECTOR CABLE
272	INT	JB-284	JB-282	0.75	2 – INTRUSION DETECTOR CABLE
272	INT	ID-261	JB-283	0.50	1 – INTRUSION DETECTOR CABLE
272	INT	JB-283	JB-282	0.50	1 – INTRUSION DETECTOR CABLE
272	INT	JB-282	JB-280	0.75	3 – INTRUSION DETECTOR CABLES
273	INT	JB-280	RCF	2.50	17 – INTRUSION DETECTOR CABLES, 2 – INTERCOM CABLES, 2 – CARD KEY ACCESS AND POWER CABLES
273	INT	RCF	EXISTING RTU-EG	CABLE TRAY	17 – INTRUSION DETECTOR CABLES
274	INT	RCF	APC-01	CABLE TRAY	2 – CARD KEY ACCESS AND POWER CABLES
275	INT	RCF	TEL MDF	CABLE TRAY	2 – INTERCOM CABLES
280	FP	SD-200	JB-285	0.50	2 – SMOKE DETECTOR CABLE
280	FP	PS-200	AV-200	0.50	1 – PULL STATION CABLE
280	FP	AV-200	JB-285	0.75	1 – PULL STATION, 1 – AUDIBLE/VISUAL ALARM CABLE
280	FP	JB-285	JB-286	1.00	2 – SMOKE DETECTOR CABLES, 1 – PULL STATION CABLE, 1 – AUDIBLE/VISUAL CABLE
280	FP	SD-201	JB-286	0.75	2 – SMOKE DETECTOR CABLES
280	FP	JB-286	JB-287	1.00	2 – SMOKE DETECTOR CABLES, 1 – PULL STATION CABLE, 1 – AUDIBLE/VISUAL CABLE
280	FP	SD-203	SD-202	0.50	1 – SMOKE DETECTOR CABLE
280	FP	SD-202	JB-287	0.75	2 – SMOKE DETECTOR CABLES
280	FP	JB-287	RCF	1.00	2 – SMOKE DETECTOR CABLES, 1 – PULL STATION CABLE, 1 – AUDIBLE/VISUAL CABLE
280	FP	RCF	FACP-CC	URF	2 – SMOKE DETECTOR CABLES, 1 – PULL STATION CABLE, 1 – AUDIBLE/VISUAL CABLE
281	FP	SD-226	JB-290	0.50	1 – SMOKE DETECTOR CABLE
281	FP	PS-212	AV-212	0.50	1 – PULL STATION CABLE
281	FP	AV-212	JB-290	0.75	1 – PULL STATION, 1 – AUDIBLE/VISUAL ALARM CABLE
281	FP	JB-290	JB-288	1.00	1 – SMOKE DETECTOR CABLE, 1 – PULL STATION CABLE, 1 – AUDIBLE/VISUAL CABLE
281	FP	SD-223	JB-288	0.75	2 – SMOKE DETECTOR CABLES
281	FP	JB-288	JB-289	1.00	1 – SMOKE DETECTOR CABLE, 1 – PULL STATION CABLE, 1 – AUDIBLE/VISUAL CABLE
281	FP	SD-225	JB-289	0.75	2 – SMOKE DETECTOR CABLES
281	FP	SD-224	JB-289	0.75	2 – SMOKE DETECTOR CABLES
281	FP	JB-289	RCF	1.00	1 – SMOKE DETECTOR CABLE, 1 – PULL STATION CABLE, 1 – AUDIBLE/VISUAL CABLE
281	FP	RCF	FACP-CC	URF	1 – SMOKE DETECTOR CABLE, 1 – PULL STATION CABLE, 1 – AUDIBLE/VISUAL CABLE
282	FP	SD-279	SD-278	0.50	1 – SMOKE DETECTOR CABLE
282	FP	SD-278	SD-277	0.50	1 – SMOKE DETECTOR CABLE
282	FP	SD-277	SD-276	0.50	1 – SMOKE DETECTOR CABLE
282	FP	SD-276	SD-275	0.50	1 – SMOKE DETECTOR CABLE
282	FP	PS-222	AV-222	0.50	1 – PULL STATION CABLE
282	FP	AV-222	SD-275	0.75	1 – PULL STATION, 1 – AUDIBLE/VISUAL ALARM CABLE
282	FP	SD-275	SD-274	1.25	2 – SMOKE DETECTOR CABLES, 2 – PULL STATION CABLES, 2 – AUDIBLE/VISUAL CABLES
282	FP	SD-280	AV-221	0.75	2 – SMOKE DETECTOR CABLES
282	FP	PS-221	AV-221	0.50	1 – PULL STATION CABLE
282	FP	AV-221	SD-272	1.25	2 – SMOKE DETECTOR CABLES, 1 – PULL STATION CABLE, 1 – AUDIBLE/VISUAL CABLE
282	FP	SD-270	SD-271	0.50	1 – SMOKE DETECTOR CABLE
282	FP	SD-271	SD-272	1.00	3 – SMOKE DETECTOR CABLES
282	FP	SD-272	SD-273	1.25	4 – SMOKE DETECTOR CABLES, 1 – PULL STATION CABLE, 1 – AUDIBLE/VISUAL CABLE
282	FP	SD-273	SD-273A	1.25	2 – SMOKE DETECTOR CABLES
282	FP	SD-273	SD-274	1.25	4 – SMOKE DETECTOR CABLES, 1 – PULL STATION CABLE, 1 – AUDIBLE/VISUAL CABLE
282	FP	SD-274	RCF	2.00	4 – SMOKE DETECTOR CABLES, 3 – PULL STATION CABLES, 3 – AUDIBLE/VISUAL CABLES
282	FP	RCF	FACP-CC	URF	4 – SMOKE DETECTOR CABLES, 3 – PULL STATION CABLES, 3 – AUDIBLE/VISUAL CABLES
283	FP	SD-263	AV-221	0.50	1 – SMOKE DETECTOR CABLE
284	FP	PS-261	AV-261	0.50	1 – PULL STATION CABLE
284	FP	AV-261	SD-264	0.75	1 – PULL STATION, 1 – AUDIBLE/VISUAL ALARM CABLE
284	FP	SD-264	SD-275	1.00	1 – SMOKE DETECTOR CABLE, 1 – PULL STATION CABLE, 1 – AUDIBLE/VISUAL CABLE
A300	RADIO	ROOF ANTENNA	NWC R.O	2.00	1 – ANTENNA COAX
A301	RADIO	NWC R.O	NWC 4.0	EX. 2.00	1 – ANTENNA COAX
A301	RADIO	NWC 4.0	NWC 3.0	EX. 2.00	1 – ANTENNA COAX
A302	RADIO	NWC 3.0	800 MHz AMPL.	2.00	1 – ANTENNA COAX
A303	RADIO	800 MHz AMPL.	800 MHz ANT.	2.00	1 – ANTENNA COAX
A304	RADIO	POWER PANEL	800 MHz AMPL.	0.75	2 – #12, 1 - GND (POWER)
A400	RADIO	ROOF ANTENNA	SWC R.O	2.00	1 – ANTENNA COAX
A401	RADIO	SWC R.O	SWC 4.0	EX. 2.00	1 – ANTENNA COAX
A401	RADIO	SWC 4.0	SWC 3.0	EX. 2.00	1 – ANTENNA COAX
A402	RADIO	SWC 3.0	800 MHz AMPL.	2.00	1 – ANTENNA COAX
A403	RADIO	800 MHz AMPL.	800 MHz ANT.	2.00	1 – ANTENNA COAX

CABLE SIZE ASSUMPTIONS FOR CONDUIT SIZING CALCULATIONS

CABLE TYPE	CABLE SIZE
INTRUSION DETECTOR CABLE	2/C #18
SMOKE DETECTOR CABLE	2/C #18
CARD READER CABLE	2/C #18 SHIELDED
CARD READER POWER CABLE	2 #18
INTERCOM CABLE	2 #22 TWISTED PAIR, SHIELDED
TELEPHONE CABLE	4 PAIR #24
TELEPHONE/LAN FIBER	2/C MULTIMODE (62.5 MICRON)
PULL STATION CABLE	2/C #16
AUDIBLE/VISUAL ALARM CABLE	2/C #16
CCTV CONTROL CABLE	3/C #18 SHIELDED (2 CABLES)
CCTV VIDEO CABLE	RG59 TRIAX
CCTV POWER CABLE	#12 (3 CABLES)
HVAC CABLE	11 PAIR #18
ELEVATOR CABLE	15 PAIR #18
PUMP CABLE	11 PAIR #18

XREF LIST:
TOC-BRDR

ORIGINAL PLAN
NOTE BOOK
No.
SURVEY PLOTTED BY
DRAWN BY P. R. E. HITT DATE 10/94
TRACED BY
DESIGNED BY D. D. ANDERSON 10/94
QUANTITIES BY
CHECKED BY

THIS WORK WAS PREPARED BY ME OR UNDER MY SUPERVISION
Stanley M.O.T. Ching

STANLEY M.O.T. CHING
LICENSED PROFESSIONAL ENGINEER
No. 6312-C
HAWAII, U.S.A.

DATE	REVISION
4/3/97	DCN 75-015: REVISED RUN NOS 272 AND 273 TO INCORPORATE ID-263, AND RUN NO. 282 TO INCORPORATE SD-273A
10/13/95	ADDENDUM 1

STATE OF HAWAII
DEPARTMENT OF TRANSPORTATION
HIGHWAYS DIVISION

CONDUIT/CABLE SCHEDULE & NOTES – 2, SYSTEMS

TRAFFIC OPERATIONS CENTER EXPANSION
H-3 FINISH (UNIT III)
FAIP NO. I-H3-1(75), UNIT III
T.K. TUNNEL/ACCESS ROADS

SCALE: NONE DATE: JUN 1995

SHEET NO. 3T2 OF 10 SHEETS

P:\H3\CONT.75\UNIT-III\TOC-EXP\H3-3T03.DWG

FED. ROAD DIST. NO.	STATE	FED. AID PROJ. NO.	FISCAL YEAR	SHEET NO.	TOTAL SHEETS
HAWAII	HAW.	I-H3-1(75) UNIT III	1994	201 S-1	353

CONDUIT/CABLE SCHEDULE

RUN NO.	CIRC. IDENT.	FROM	TO	SIZE	CABLE QUANTITY
A404	RADIO	POWER PANEL	800MHz AMPL.	0.75	2 – #12, 1-GND (POWER)
A600	RADIO	ROOF ANTENNA	NEC R.0	2.00	1 – ANTENNA COAX
A601	RADIO	NEC R.0	NEC 4.0	EX. 2.00	1 – ANTENNA COAX
A601	RADIO	NEC 4.0	NEC 3.0	EX. 2.00	1 – ANTENNA COAX
A602	RADIO	NEC 3.0	800MHz AMPL.	2.00	1 – ANTENNA COAX
A603	RADIO	800MHz AMPL.	800MHz ANT.	2.00	1 – ANTENNA COAX
A604	RADIO	POWER PANEL	800MHz AMPL.	0.75	2 – #12, 1-GND (POWER)
A700	RADIO	ROOF ANTENNA	SEC R.0	2.00	1 – ANTENNA COAX
A701	RADIO	SEC R.0	SEC 4.0	EX. 2.00	1 – ANTENNA COAX
A701	RADIO	SEC 4.0	SEC 3.0	EX. 2.00	1 – ANTENNA COAX
A701	RADIO	SEC 3.0	SEC 2.0	EX. 2.00	1 – ANTENNA COAX
A702	RADIO	SEC 3.0	800MHz AMPL.	2.00	2 – ANTENNA COAX
A703	RADIO	800 MHz AMPL.	800 MHz ANT.	2.00	1 – ANTENNA COAX
A704	RADIO	POWER PANEL	800MHz AMPL.	0.75	2 – #12, 1-GND (POWER)
A711	RADIO	SEC 2.0	JB 715	EX. 2.00	1 – ANTENNA COAX
A711	RADIO	JB 715	JB	2.00	1 – ANTENNA COAX
A711	INT/COM	JB	JB 715	EX 2.00	INTRUSION DETECTOR CABLES, 1 CARD READER CABLE/POWER CABLE, 1-DOOR STRIKE CABLE
A711	INT/COM	JB 715	JB 723	EX 2.00	INTRUSION DETECTOR CABLES, 1 CARD READER CABLE/POWER CABLE, 1-DOOR STRIKE CABLE
A711	INT/COM	JB 723	JB 733	EX 2.00	INTRUSION DETECTOR CABLES, 1 CARD READER CABLE/POWER CABLE, 1-DOOR STRIKE CABLE
A711	INT/COM	JB 733	SEC 2.0	EX 2.00	INTRUSION DETECTOR CABLES, 1 CARD READER CABLE/POWER CABLE, 1-DOOR STRIKE CABLE
A711	INT	SEC 2.0	APC 22	EX 2.00	1 CARD READER CABLE/POWER CABLE, 1-DOOR STRIKE CABLE
A711	INT/COM	SEC 2.0	RTU KO	EX 2.00	2 INTRUSION DETECTOR CABLES

ORIGINAL PLAN	
	SURVEY PLOTTED BY
	DRAWN BY
	TRACED BY
NOTE BOOK	DESIGNED BY
	QUANTITIES BY
No.	CHECKED BY
	DATE

GLEN J. FROM LICENSED PROFESSIONAL ENGINEER No. 8561-C HAWAII, U.S.A.

THIS WORK WAS PREPARED BY ME OR UNDER MY SUPERVISION

DATE	REVISION
1/14/97	DCN75-010: REVISED PER RESPONSE TO RFI # 4097-136
10/27/95	ADDENDUM 2 - ADDED CONTINUATIONS TO CONDUIT RUN A711
10/13/95	ADDENDUM 1

STATE OF HAWAII
DEPARTMENT OF TRANSPORTATION
HIGHWAYS DIVISION

CONDUIT/CABLE SCHEDULE & NOTES – 3, SYSTEMS

TRAFFIC OPERATIONS CENTER EXPANSION

H-3 FINISH (UNIT III)
FAIP NO. I-H3-1(75), UNIT III
T.K. TUNNEL/ACCESS ROADS

SCALE: NONE DATE: OCT. 1995

SHEET NO. 3T2A OF 10 SHEETS

ADD. 201S-1

FED. ROAD DIST. NO.	STATE	FED. AID PROJ. NO.	FISCAL YEAR	SHEET NO.	TOTAL SHEETS
HAWAII	HAW.	I-H3-1(75) UNIT III	1994	202	353

N

FOR AS BUILTS SEE TRANSDYN DWG:

CCTV DETAILS	3001-2001-01
ID WIRING DETAILS	3001-2107-01
FIRE SYSTEM CONDUIT AND CABLE ROUTING	3001-900-9002
ID SYSTEM CONDUIT AND CABLE ROUTING	3001-900-9006
RADIO AND CCTV CONDUIT AND CABLE ROUTING	3001-900-9010
SYSTEMS AND CONTROL CONDUIT AND CABLE ROUTING	3001-900-9024

XREF LIST:
HAL-LOWR
SCALE5
TOC-BRDR

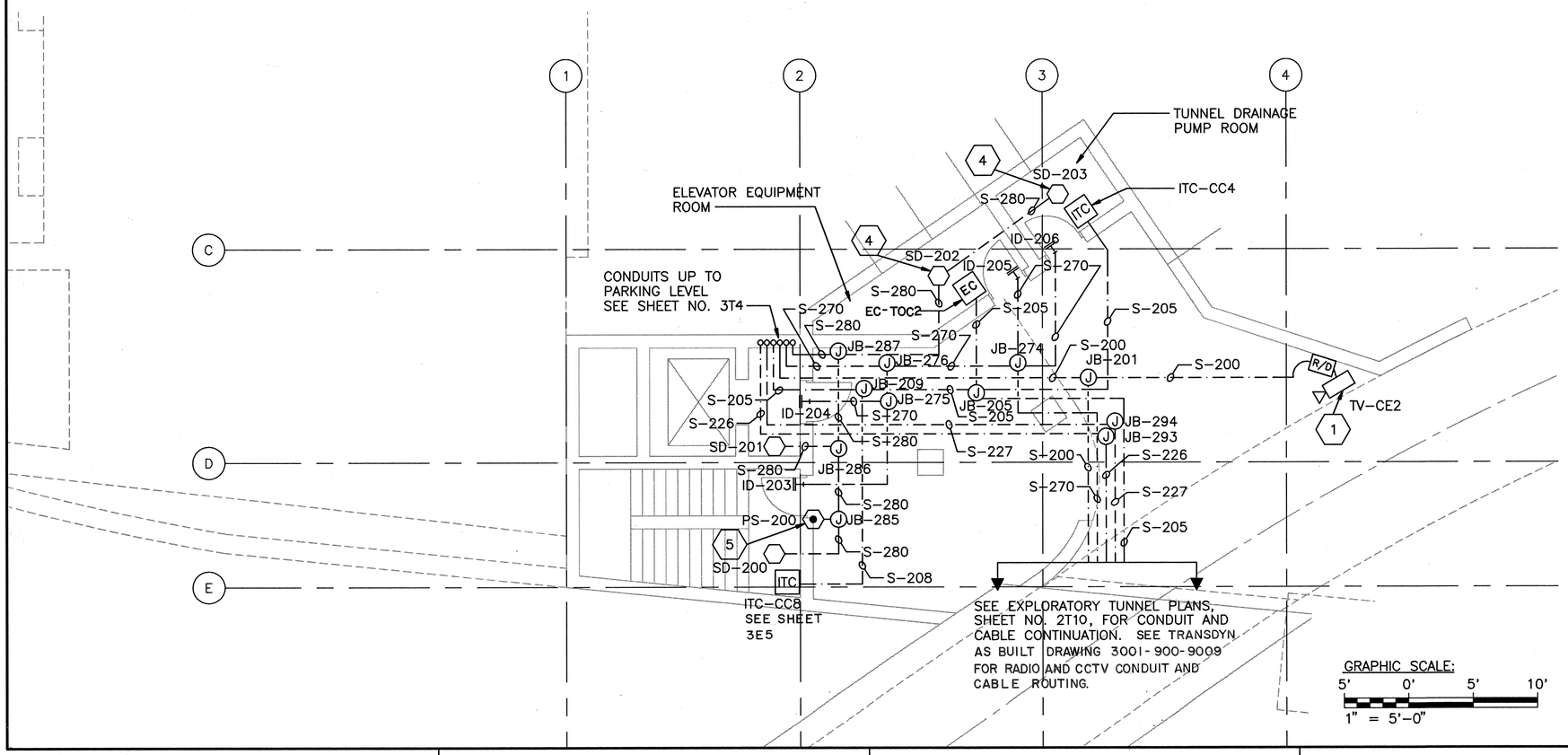

NOTES:
1. FOR CONDUIT AND CABLE SCHEDULE AND CONSTRUCTION NOTES, SEE SHEET NOS. 3T1 – 3T2.
2. SEE SHT. NOS. 3T9 & 3T10 FOR INSTALLATION DETAIL UNLESS OTHERWISE NOTED.

GRAPHIC SCALE:
5' 0' 5' 10'
1" = 5'-0"

STANLEY M.O.T. CHUNG
LICENSED PROFESSIONAL ENGINEER
No. 6312-C
HAWAII, U.S.A.

THIS WORK WAS PREPARED BY ME OR UNDER MY SUPERVISION
Stanley M.O.T. Chung

DATE	REVISION
10/13/95	ADDENDUM 1

STATE OF HAWAII
DEPARTMENT OF TRANSPORTATION
HIGHWAYS DIVISION

LOWER LEVEL PLAN SYSTEMS

TRAFFIC OPERATIONS CENTER EXPANSION
H-3 FINISH (UNIT III)
FAIP NO. I-H3-1(75), UNIT III
T.K. TUNNEL/ACCESS ROADS

SCALE: 1" = 5' DATE: JUN 1995

SHEET NO. 3T3 OF 10 SHEETS

ORIGINAL PLAN | SURVEY PLOTTED BY | DRAWN BY P. R. E. HITT | DATE 10/94
NOTE BOOK | TRACED BY | DESIGNED BY D. D. ANDERSON | 10/94
No. | QUANTITIES BY | CHECKED BY

P:\H3\CONT.75\UNIT-III\TOC-EXP\H3-3T04.DWG

ADD. 202

FED. ROAD DIST. NO.	STATE	FED. AID PROJ. NO.	FISCAL YEAR	SHEET NO.	TOTAL SHEETS
HAWAII	HAW.	I-H3-1(75) UNIT III	1994	203	353

N

FOR AS BUILT SEE TRANSDYN DWG:

FIRE SYSTEM CONDUIT AND CABLE ROUTING	3001-900-9001
INTRUSION SYSTEM CONDUIT AND CABLE ROUTING	3001-900-9007 & 9008
RADIO AND CCTV SYSTEM CONDUIT AND CABLE ROUTING	3001-900-9011 & 9012
SYSTEM AND CONTROL CONDUIT AND CABLE ROUTING	3001-900-9025 TRU 9027

XREF LIST:
HAL-LVL1
SCALE5
TOC-BRDR

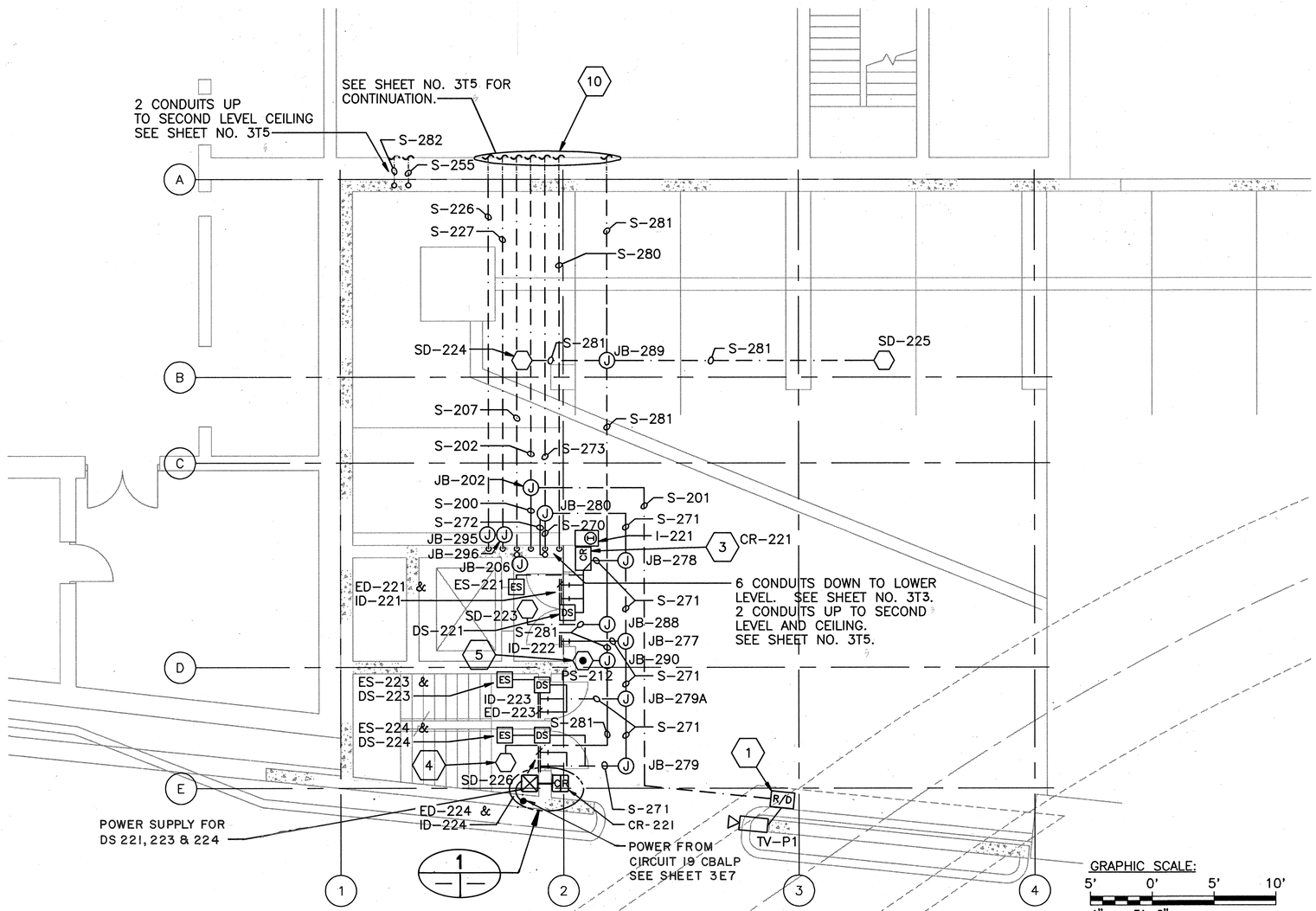

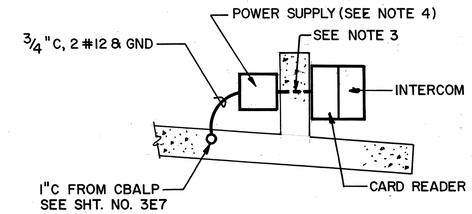

DETAIL 1
SCALE: NONE

NOTES:
1. FOR CONDUIT AND CABLE SCHEDULE AND CONSTRUCTION NOTES, SEE SHEET NOS. 3T1 – 3T2.
2. SEE SHEET 3T9 & 3T10 FOR INSTALLATION DETAILS UNLESS OTHERWISE NOTED.
3. CORE DRILL 2" DIA. HOLE THRU CONCRETE WALL AND INSTALL 1½" CONDUIT.
4. INSTALL POWER SUPPLY CAPABLE OF OPERATING A MINIMUM OF 3 DOOR STRIKES.

GRAPHIC SCALE:
5' 0' 5' 10'
1" = 5'-0"

STANLEY M.O.T. CHANG
LICENSED PROFESSIONAL ENGINEER
No. 6312-C
HAWAII, U.S.A.

THIS WORK WAS PREPARED BY ME OR UNDER MY SUPERVISION
Stanley M.O.T. Chang

DATE	REVISION
5/29/97	DCN 75-019 ADDED INTERCOM, CARD READER, PWR SUPPLY, DETAIL 1, NOTES 3 & 4
10/13/95	ADDENDUM 1

STATE OF HAWAII
DEPARTMENT OF TRANSPORTATION
HIGHWAYS DIVISION

PARKING LEVEL PLAN SYSTEMS

TRAFFIC OPERATIONS CENTER EXPANSION
H-3 FINISH (UNIT III)
FAIP NO. I-H3-1(75), UNIT III
T.K. TUNNEL/ACCESS ROADS

SCALE: 1" = 5' DATE: JUN 1995

SHEET NO. 3T4 OF 10 SHEETS

ORIGINAL PLAN		DATE
	SURVEY PLOTTED BY	
	DRAWN BY P. R. E. HITT	10/94
	TRACED BY	
	DESIGNED BY D. D. ANDERSON	10/94
NOTE BOOK	QUANTITIES BY	
No.	CHECKED BY	

P:\H3\CONT.75\UNIT-III\TOC-EXP\H3-3T05.DWG

C.O. ADD. 203

FED. ROAD DIST. NO.	STATE	FED. AID PROJ. NO.	FISCAL YEAR	SHEET NO.	TOTAL SHEETS
HAWAII	HAW.	I-H3-1(75) UNIT III	1994	204	353

SEE TRANSDYN AS BUILT DRAWING 3001-900-9028 FOR SYSTEMS CONDUIT AND CABLE ROUTING.

SEE TRANSDYN AS BUILT DRAWING 3001-900-9000 FOR FIRE SYSTEM CONDUIT AND CABLE ROUTING.

XREF LIST:
HAL-LVL2
SCALE5
TOC-BRDR

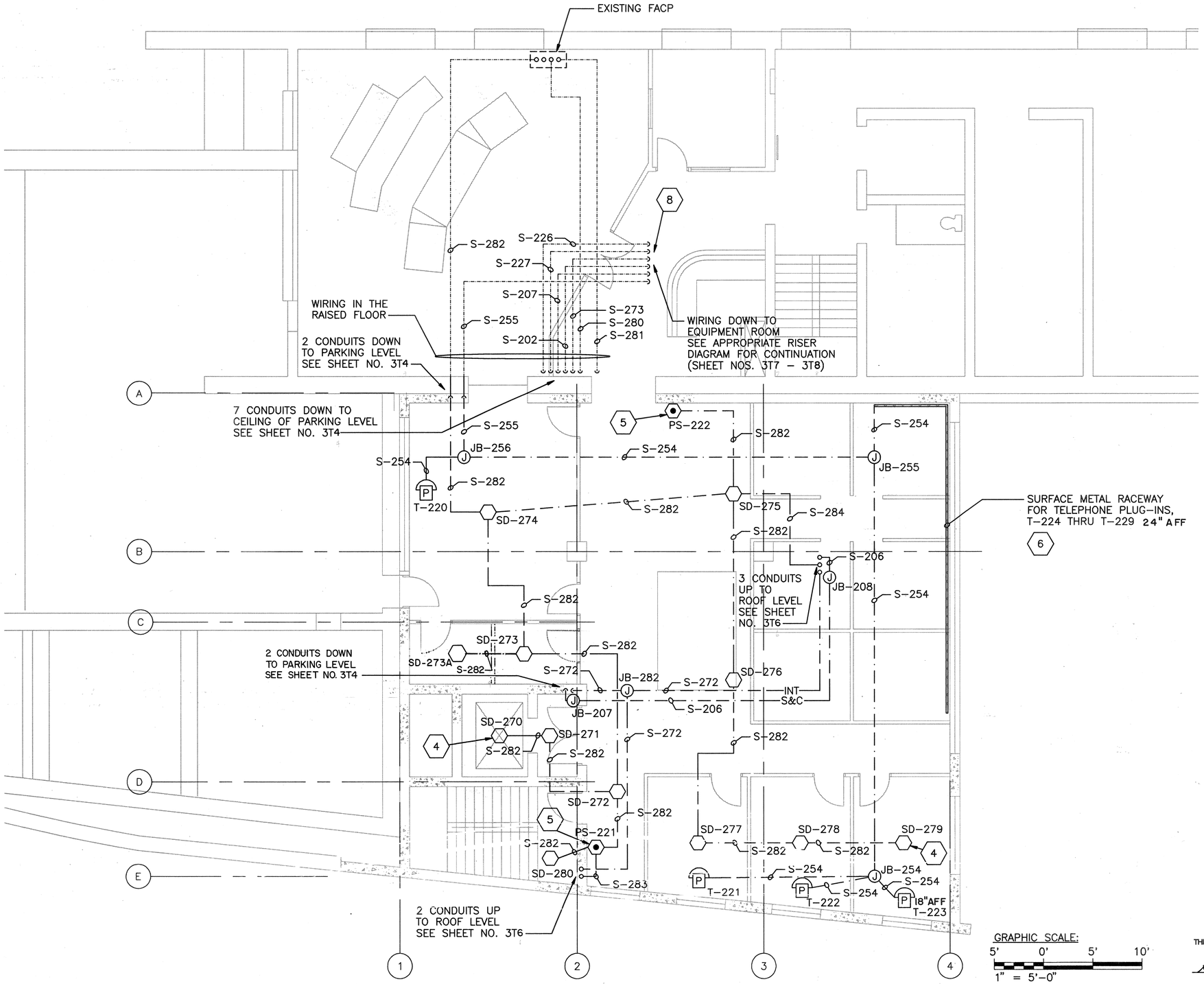

NOTES:
1. FOR CONDUIT AND CABLE SCHEDULE AND CONSTRUCTION NOTES, SEE SHEET NOS. 3T1 - 3T2.
2. SEE SHEETS 3T9 & 3T10 FOR INSTALLATION DETAILS UNLESS OTHERWISE NOTED.

GRAPHIC SCALE:
5' 0' 5' 10'
1" = 5'-0"

STANLEY M.O.T. CHING
LICENSED PROFESSIONAL ENGINEER
No. 6312-C
HAWAII, U.S.A.

THIS WORK WAS PREPARED BY ME OR UNDER MY SUPERVISION

Stanley M.O.T. Ching

4/3/97	DCN 75-015: INDICATED WALL BETWEEN ELECT. & STORAGE RMS, ADDED SD-273A
10/13/95	ADDENDUM I
DATE	REVISION

STATE OF HAWAII
DEPARTMENT OF TRANSPORTATION
HIGHWAYS DIVISION

SECOND LEVEL PLAN SYSTEMS

TRAFFIC OPERATIONS CENTER EXPANSION
H-3 FINISH (UNIT III)
FAIP NO. I-H3-1(75), UNIT III
T.K. TUNNEL/ACCESS ROADS

SCALE: 1" = 5' DATE: JUN 1995

SHEET NO. 3T5 OF 10 SHEETS

ORIGINAL PLAN		SURVEY PLOTTED BY	P. R. E. HITT	DATE 10/94
NOTE BOOK		DRAWN BY	" " "	
		TRACED BY	" " "	10/94
		DESIGNED BY	D. D. ANDERSON	
		QUANTITIES BY		
No.		CHECKED BY		

P:\H3\CONT.75\UNIT-III\TOC-EXP\H3-3T06.DWG

FED. ROAD DIST. NO.	STATE	FED. AID PROJ. NO.	FISCAL YEAR	SHEET NO.	TOTAL SHEETS
HAWAII	HAW.	I-H3-1(75) UNIT III	1994	205	353

SEE TRANSDYN AS BUILT DRAWING 3001-900-9029
FOR ALL SYSTEMS CONDUIT AND CABLE ROUTING

XREF LIST:
HAL-ROOF
SCALES
TOC-BRDR

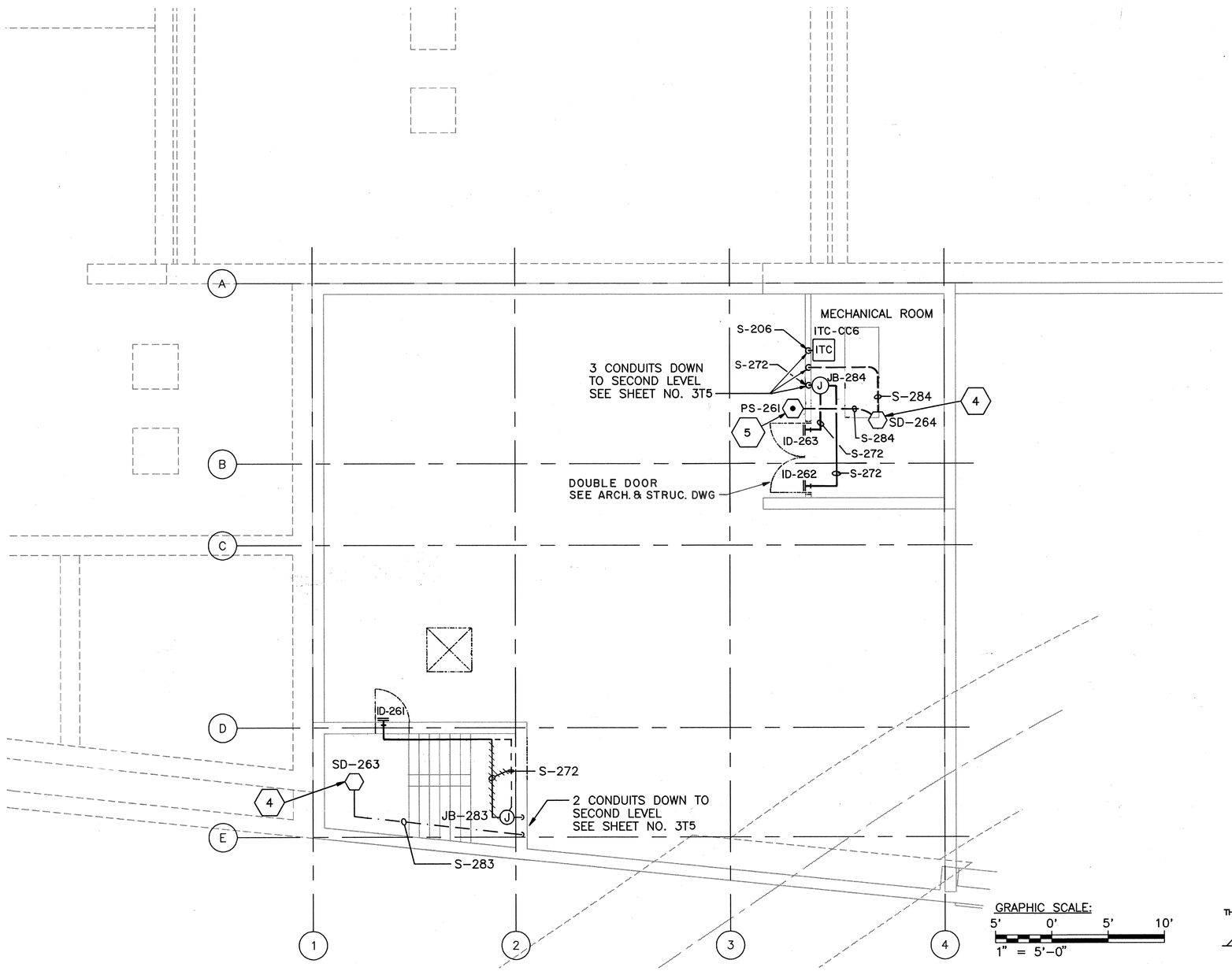

NOTES:
1. FOR CONDUIT AND CABLE SCHEDULE AND CONSTRUCTION NOTES, SEE SHEET NOS. 3T1 – 3T2.
2. SEE SHEETS 3T9 & 3T10 FOR INSTALLATION DETAILS UNLESS OTHERWISE NOTED.

GRAPHIC SCALE:
5' 0' 5' 10'
1" = 5'-0"

STANLEY M.O.T. CHING
LICENSED PROFESSIONAL ENGINEER
No. 6312-C
HAWAII, U.S.A.

THIS WORK WAS PREPARED BY ME OR UNDER MY SUPERVISION
Stanley M.O.T. Ching

DATE	REVISION
4/3/97	DCN75-015: RELOCATED ID-261 PER RFI NO. 4097-186, ADDED ID-263 PER RFI NO. 4097-194.
10/13/95	ADDENDUM 1

STATE OF HAWAII
DEPARTMENT OF TRANSPORTATION
HIGHWAYS DIVISION

ROOF LEVEL PLAN
SYSTEMS

TRAFFIC OPERATIONS CENTER EXPANSION
H-3 FINISH (UNIT III)
FAIP NO. I-H3-1(75), UNIT III
T.K. TUNNEL/ACCESS ROADS

SCALE: 1" = 5' DATE: JUN 1995

SHEET NO. 3T6 OF 10 SHEETS

ORIGINAL PLAN		
	SURVEY PLOTTED BY	DATE
	DRAWN BY P. R. E. HITT	10/94
	TRACED BY	
NOTE BOOK	DESIGNED BY D. D. ANDERSON	10/94
	QUANTITIES BY	
No.	CHECKED BY	

P:\H3\CONT.75\UNIT-III\TOC-EXP\H3-3T07.DWG

ADD. 205

FED. ROAD DIST. NO.	STATE	FED. AID PROJ. NO.	FISCAL YEAR	SHEET NO.	TOTAL SHEETS
HAWAII	HAW.	I-H3-1(75) UNIT III	1994	206	353

XREF LIST:
TOC-BRDR

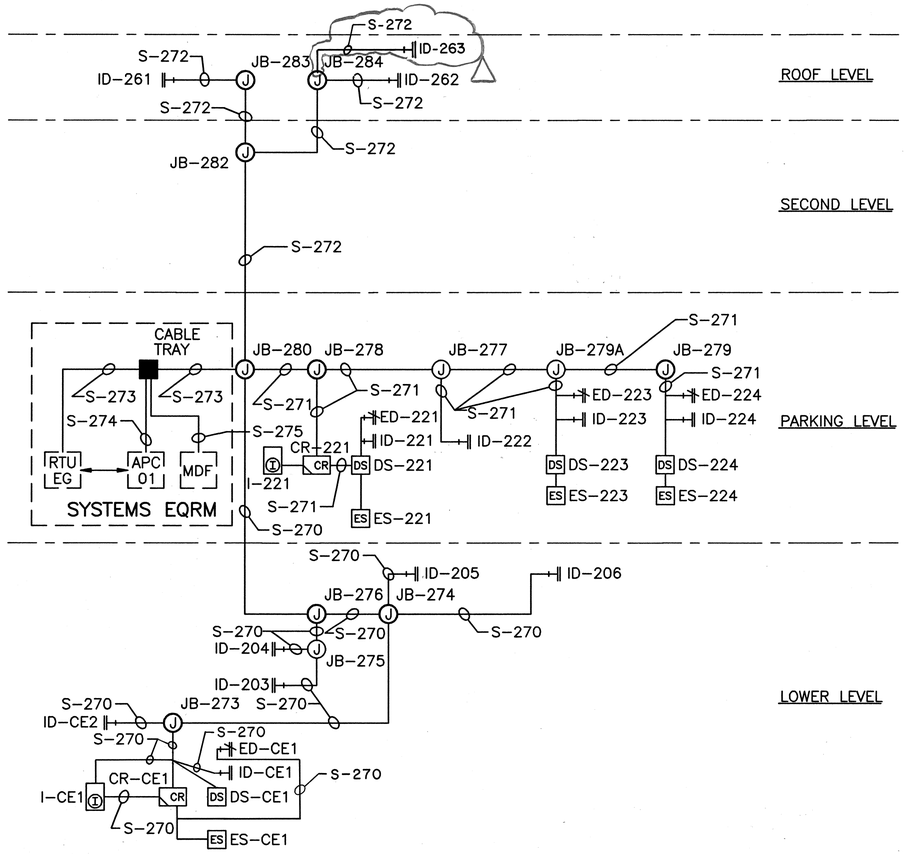

INTRUSION DETECTION RISER DIAGRAM

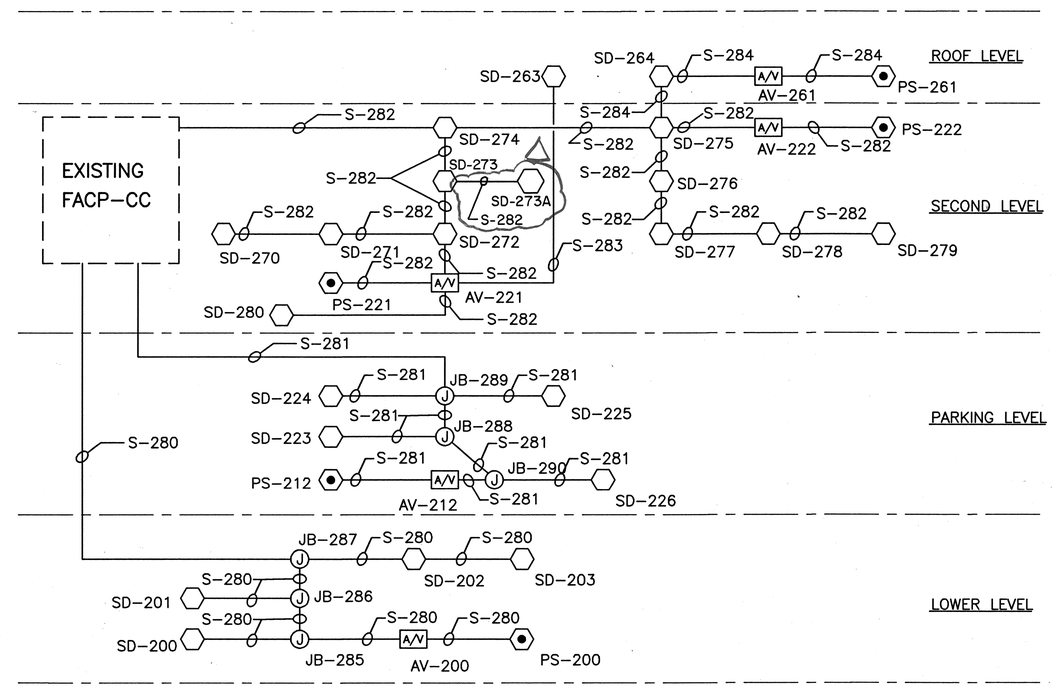

FIRE PROTECTION RISER DIAGRAM

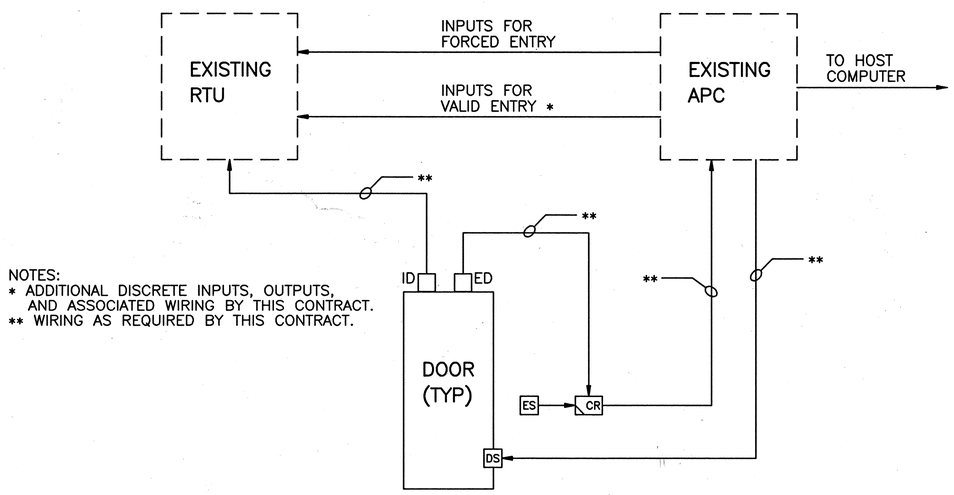

NOTES:
* ADDITIONAL DISCRETE INPUTS, OUTPUTS, AND ASSOCIATED WIRING BY THIS CONTRACT.
** WIRING AS REQUIRED BY THIS CONTRACT.

INTRUSION ALARM SYSTEM TYPICAL WIRING DIAGRAM

NOTES:
1. CONNECTIONS SHOWN TO THE DEVICES IN THE SYSTEMS EQRM ARE FOR INFORMATION ONLY. CONTRACTOR IS NOT RESPONSIBLE FOR MAKING THESE FINAL CONNECTIONS.

4/3/97	DCN75-015:ADDED SD-273A AND ID-263
DATE	REVISION

STATE OF HAWAII
DEPARTMENT OF TRANSPORTATION
HIGHWAYS DIVISION

RISER DIAGRAMS – 1
SYSTEMS

TRAFFIC OPERATIONS CENTER EXPANSION
H-3 FINISH (UNIT III)
FAIP NO. I-H3-1(75), UNIT III
T.K. TUNNEL/ACCESS ROADS

SCALE: NONE DATE: JUN 1995

STANLEY M.O.T. CHING
LICENSED PROFESSIONAL ENGINEER
No. 6312-C
HAWAII, U.S.A.

THIS WORK WAS PREPARED BY ME OR UNDER MY SUPERVISION
Stanley M.O.T. Ching

ORIGINAL PLAN	SURVEY PLOTTED BY	DATE
	DRAWN BY A. K. WRIGHT	11/94
NOTE BOOK	TRACED BY	
	DESIGNED BY D. D. ANDERSON	11/94
No.	QUANTITIES BY	
	CHECKED BY	

SHEET NO. 3T7 OF 10 SHEETS

P:\H3\CONT.75\UNIT-III\TOC-EXP\H3-3T08.DWG

FED. ROAD DIST. NO.	STATE	FED. AID PROJ. NO.	FISCAL YEAR	SHEET NO.	TOTAL SHEETS
HAWAII	HAW.	I-H3-1(75) UNIT III	1994	207	353

XREF LIST:
TOC-BRDR

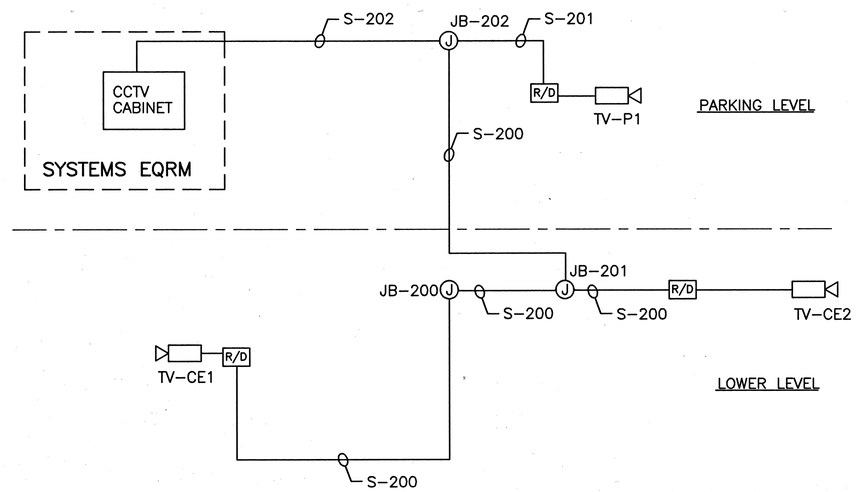

CLOSED CIRCUIT TELEVISION RISER DIAGRAM

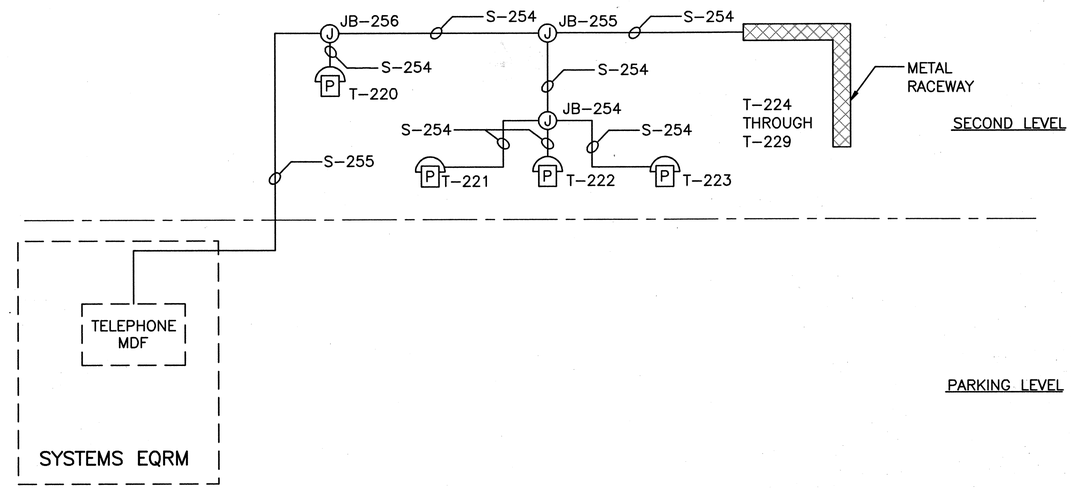

TELEPHONE RISER DIAGRAM

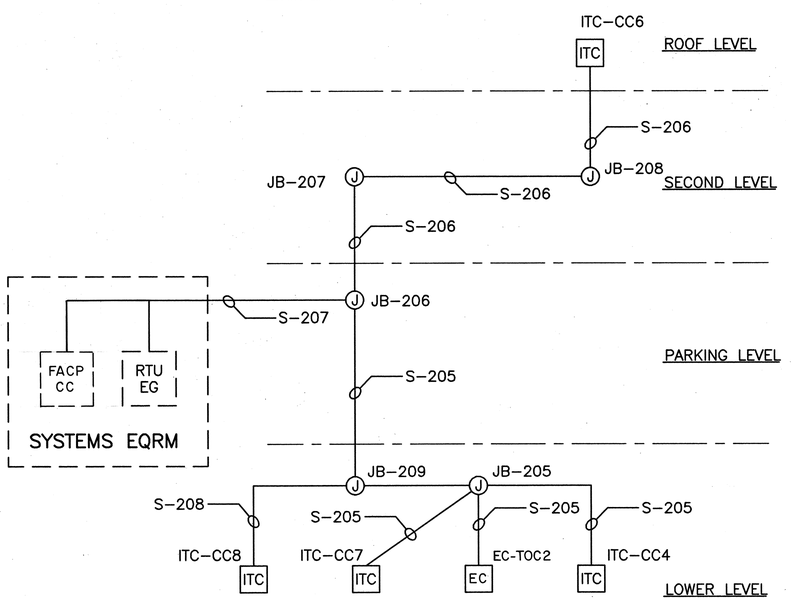

SUPERVISORY & CONTROL RISER DIAGRAM

NOTES:
1. CONNECTIONS SHOWN TO THE DEVICES IN THE SYSTEMS EQRM ARE FOR INFORMATION ONLY. CONTRACTOR IS NOT RESPONSIBLE FOR MAKING THESE FINAL CONNECTIONS.

STANLEY M.O.T. CHING
LICENSED PROFESSIONAL ENGINEER
No. 6312-C
HAWAII, U.S.A.

THIS WORK WAS PREPARED BY ME OR UNDER MY SUPERVISION

Stanley M.O.T. Ching

DATE	REVISION
10/27/95	ADDENDUM 2 - ADDED FACP-CC TO SYSTEMS EQUIPMENT ROOM, CHANGED ITC-CC5 TO EC-TOC2

STATE OF HAWAII
DEPARTMENT OF TRANSPORTATION
HIGHWAYS DIVISION

RISER DIAGRAMS – 2
SYSTEMS

TRAFFIC OPERATIONS CENTER EXPANSION
H-3 FINISH (UNIT III)
FAIP NO. I-H3-1(75), UNIT III
T.K. TUNNEL/ACCESS ROADS

SCALE: NONE DATE: JUN 1995

SHEET NO. 3T8 OF 10 SHEETS

ORIGINAL PLAN		DATE
	SURVEY PLOTTED BY	
	DRAWN BY A. K. WRIGHT	11/94
NOTE BOOK	TRACED BY	
	TECHNICAL REVIEW BY D. D. ANDERSON	11/94
No.	QUANTITIES BY	
	CHECKED BY	

P:\H3\CONT.75\UNIT-III\TOC-EXP\H3-3T09.DWG

FED. ROAD DIST. NO.	STATE	FED. AID PROJ. NO.	FISCAL YEAR	SHEET NO.	TOTAL SHEETS
HAWAII	HAW.	I-H3-1(75) UNIT III	1994	208	353

XREF LIST:
SCALE2
TOC-BRDR

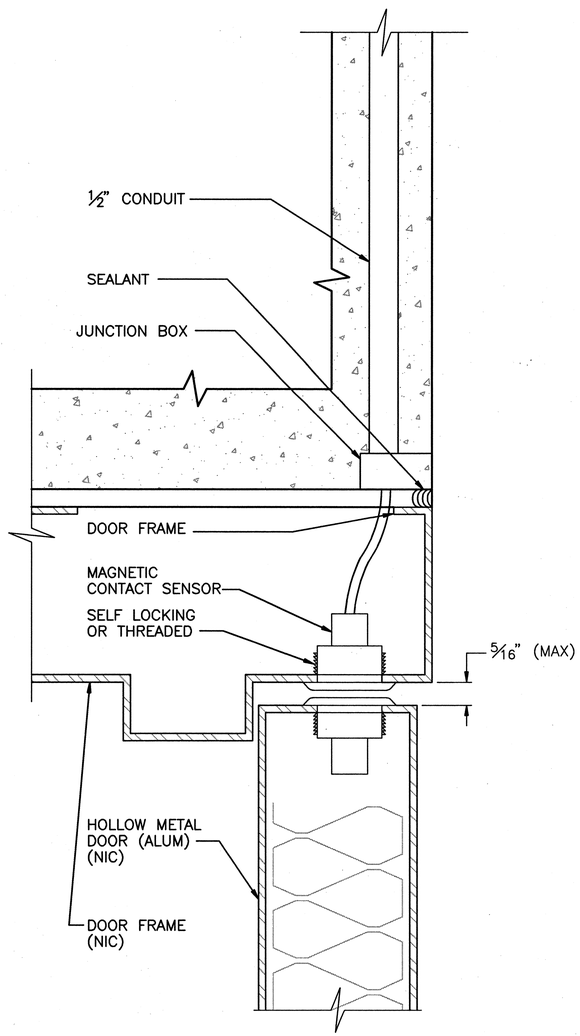

MAGNETIC DOOR CONTACT
SCALE: NONE
1 / 3T9

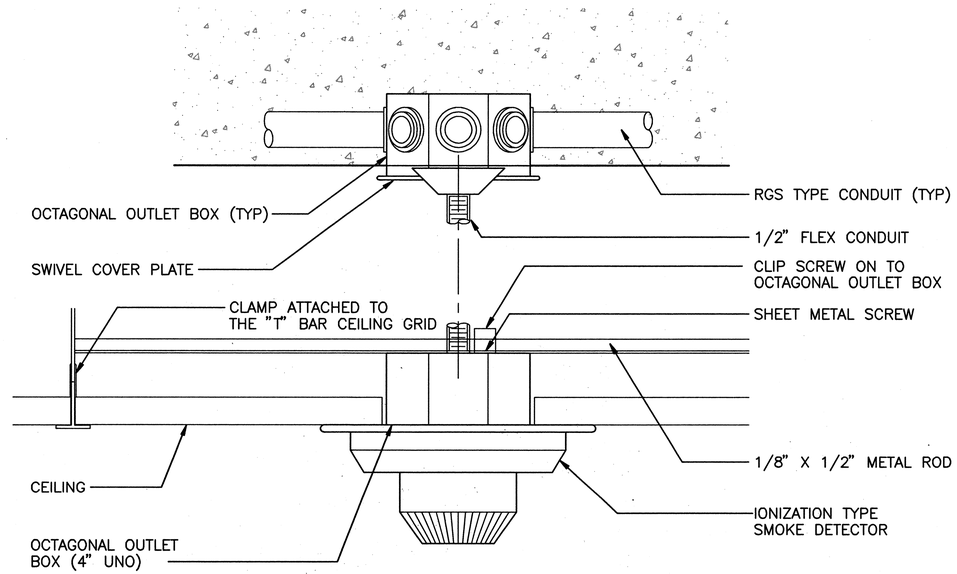

SMOKE DETECTOR CONNECTION SUSPENDED
SCALE: 6" = 1'-0"
2 / 3T9

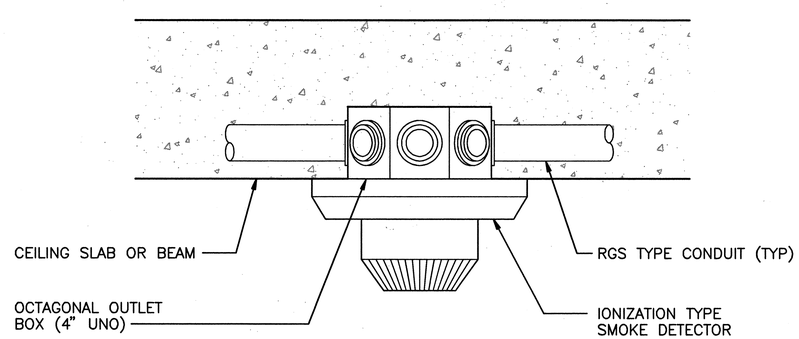

SMOKE DETECTOR CONNECTION
SCALE: 6" = 1'-0"
3 / 3T9

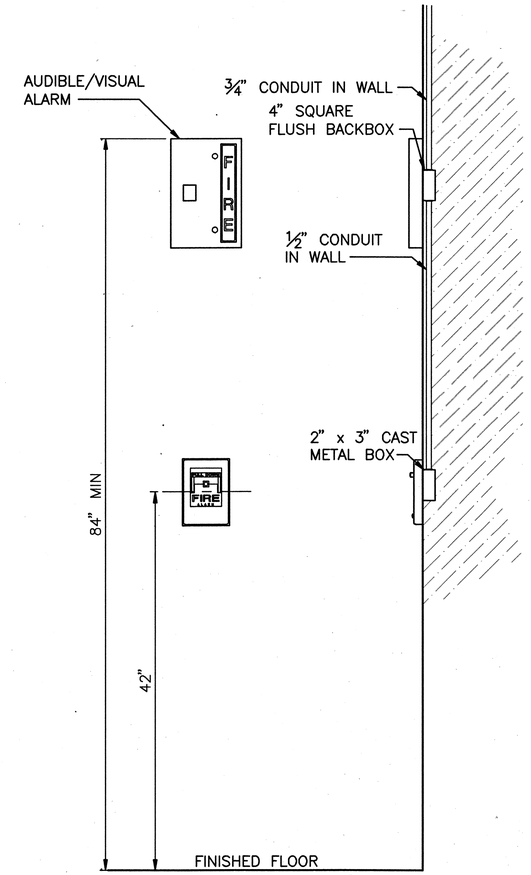

AUDIBLE/VISUAL ALARM AND PULL STATION DETAIL
SCALE: NONE
4 / 3T9

GRAPHIC SCALE:
2" 1" 0" 2" 4"
6" = 1'-0"

STANLEY M.O.T. CHANG
LICENSED PROFESSIONAL ENGINEER
No. 6312-C
HAWAII, U.S.A.

THIS WORK WAS PREPARED BY ME OR UNDER MY SUPERVISION
Stanley M.O.T. Chang

DATE	REVISION

STATE OF HAWAII
DEPARTMENT OF TRANSPORTATION
HIGHWAYS DIVISION

MISCELLANEOUS DETAILS – 1
SYSTEMS
TRAFFIC OPERATIONS CENTER EXPANSION
H-3 FINISH (UNIT III)
FAIP NO. I-H3-1(75), UNIT III
T.K. TUNNEL/ACCESS ROADS
SCALE: AS NOTED DATE: JUN 1995

SHEET NO. 3T9 OF 10 SHEETS

ORIGINAL PLAN		
NOTE BOOK	SURVEY PLOTTED BY	P. R. E. HITT — DATE 10/94
	DRAWN BY	
	TRACED BY	
	DESIGNED BY	L. Y. NELSON — 10/94
	QUANTITIES BY	
No.	CHECKED BY	

P:\H3\CONT.75\UNIT-III\TOC-EXP\H3-3T10.DWG

FED. ROAD DIST. NO.	STATE	FED. AID PROJ. NO.	FISCAL YEAR	SHEET NO.	TOTAL SHEETS
HAWAII	HAW.	I-H3-1(75) UNIT III	1994	209	353

XREF LIST:
SCALE2
TOC-BRDR

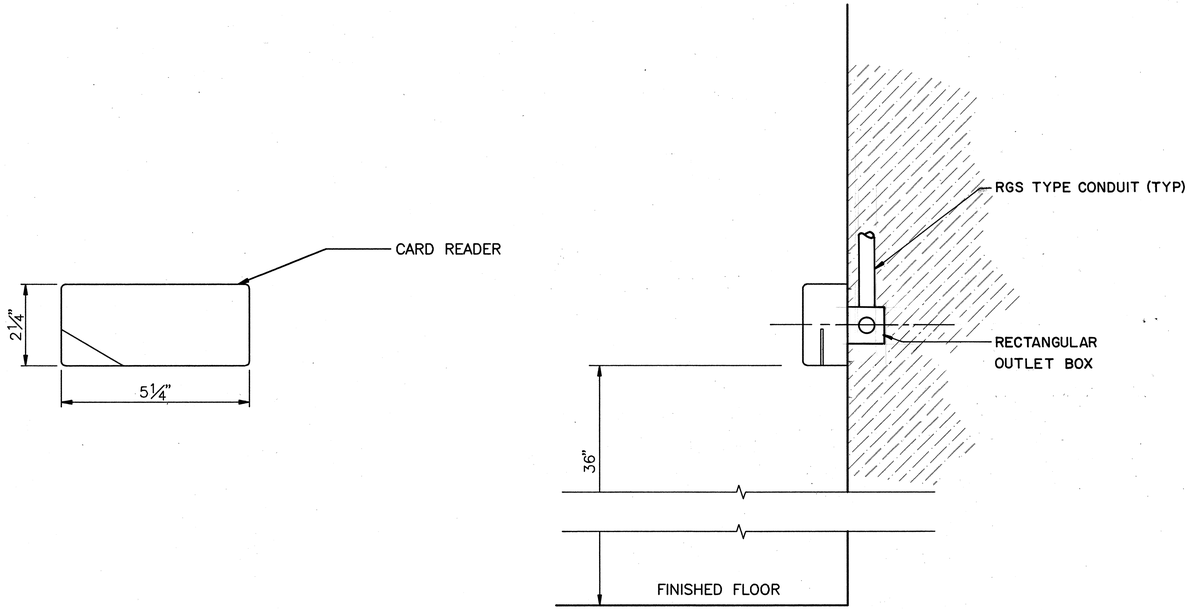

CARD READER
SCALE: 6" = 1'-0"

1
3T10

10/27/95	ADDENDUM 2-ADDED LEADER LINES
10/13/95	ADDENDUM 1
DATE	REVISION

STATE OF HAWAII
DEPARTMENT OF TRANSPORTATION
HIGHWAYS DIVISION

MISCELLANEOUS DETAILS – 2
SYSTEMS
TRAFFIC OPERATIONS CENTER EXPANSION
H-3 FINISH (UNIT III)
FAIP NO. I-H3-1(75), UNIT III
T.K. TUNNEL/ACCESS ROADS
SCALE: AS NOTED DATE: JUN 1995

SHEET NO. 3T10 OF 10 SHEETS

STANLEY M.O.T. CHING
LICENSED PROFESSIONAL ENGINEER
No. 6312-C
HAWAII, U.S.A.

THIS WORK WAS PREPARED BY ME OR UNDER MY SUPERVISION
Stanley M.O.T. Ching

GRAPHIC SCALE:
2" 1" 0" 2" 4"
6" = 1'-0"

ORIGINAL PLAN			
NOTE BOOK	SURVEY PLOTTED BY	P. R. E. HITT	DATE 11/94
	DRAWN BY	" " "	
	TRACED BY	" " "	
	DESIGNED BY	L. Y. NELSON	11/94
No.	QUANTITIES BY		
	CHECKED BY		

P:\H3\CONT.75\UNIT-III\TOC-EXP\H3-3T11.DWG