FED. ROAD DIST. NO.	STATE	FED. AID PROJ. NO.	FISCAL YEAR	SHEET NO.	TOTAL SHEETS
HAWAII	HAW.	I-H3-1(75), UNIT III	1994	327	353

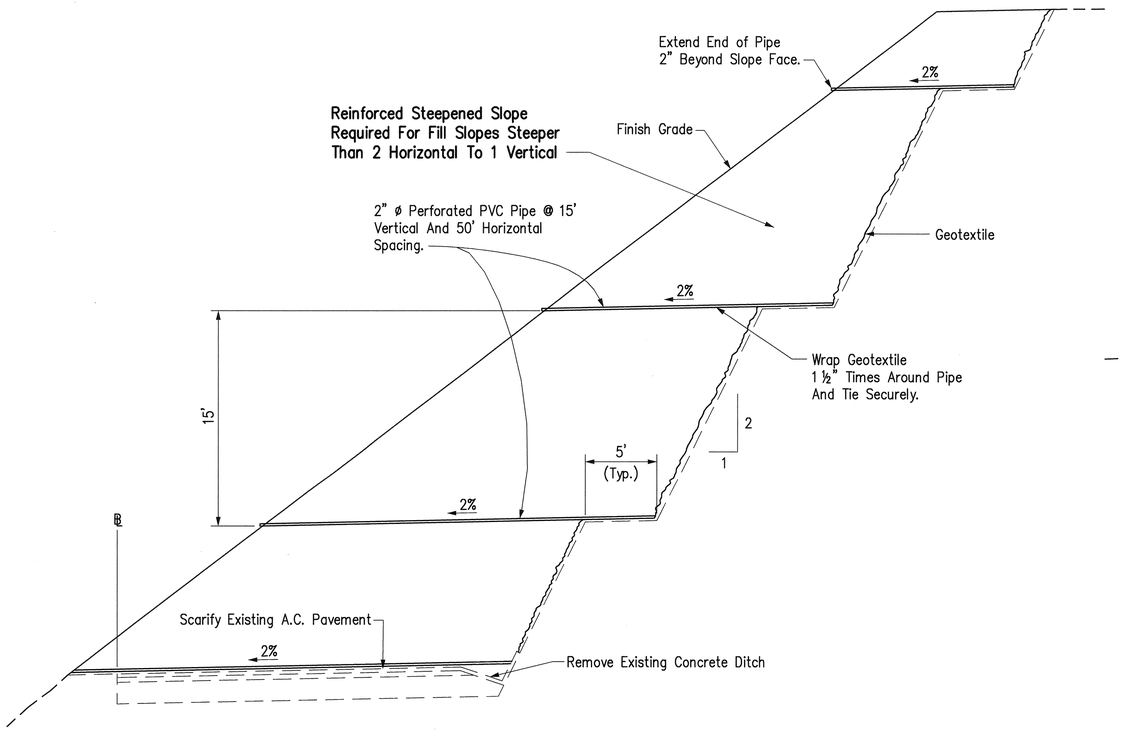

TYPICAL SLOPE RESTORATION SECTION

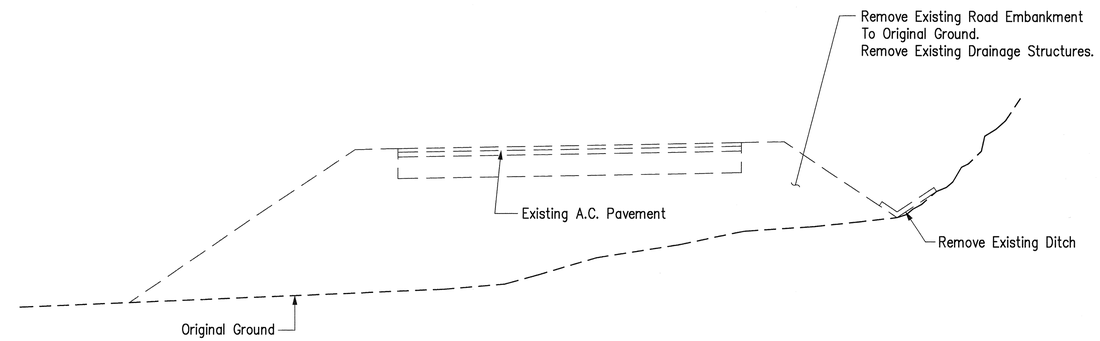

TYPICAL SECTION II
FILL SECTION

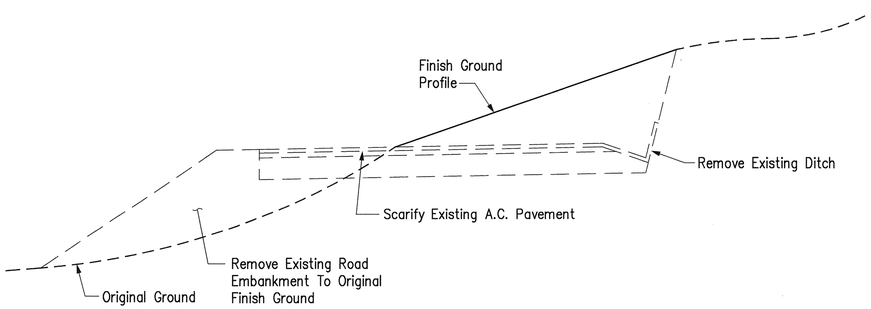

TYPICAL SECTION I
CUT & FILL SECTION

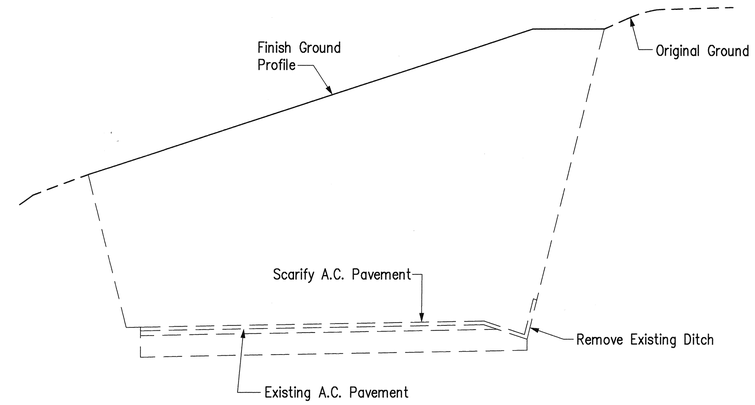

TYPICAL SECTION III
CUT SECTION

ORIGINAL PLAN	SURVEY PLOTTED BY	DATE
	DRAWN BY	"
	TRACED BY	"
NOTE BOOK	DESIGNED BY	"
	QUANTITIES BY	"
No.	CHECKED BY	"

CAD by L. Fujitani.

Last Saved: J:\H3RF\U3\DET\TYP-SEC.dwg 06/15/95 at 16:58

CLAYTON S. MIMURA
LICENSED PROFESSIONAL ENGINEER
No. 4176-C
HAWAII, U.S.A.

THIS WORK WAS PREPARED BY ME
OR UNDER MY SUPERVISION.

Clayton S. Mimura

STATE OF HAWAII
DEPARTMENT OF TRANSPORTATION
HIGHWAYS DIVISION

TYPICAL RESTORATION SECTIONS
HAIKU ACCESS ROAD
RESTORATION

H-3 FINISH (UNIT III)
FAIP NO. I-H3-1(75), UNIT III
T.K. TUNNEL/ACCESS ROADS

SCALE: 1" = 5' DATE: JUNE 1995

SHEET NO. 9C1 OF 18 SHEETS

FED. ROAD DIST. NO.	STATE	FED. AID PROJ. NO.	FISCAL YEAR	SHEET NO.	TOTAL SHEETS
HAWAII	HAW.	I-H3-1(75), UNIT III	1994	328	353

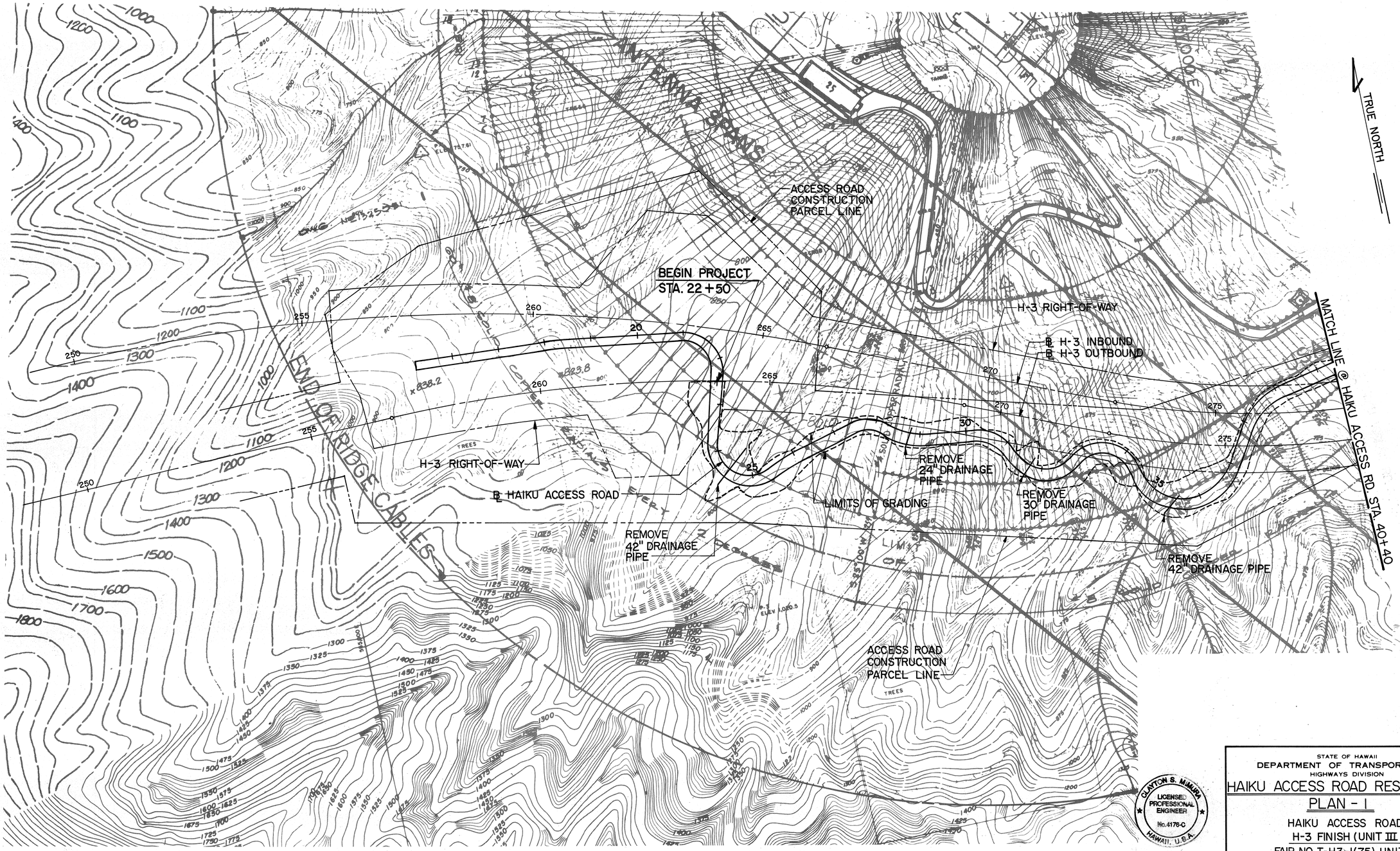

ORIGINAL PLAN		DATE
	SURVEY PLOTTED BY	
	DRAWN BY	
	TRACED BY	
NOTE BOOK	DESIGNED BY	
	QUANTITIES BY	
No.	CHECKED BY	

CLAYTON S. MIMURA
LICENSED PROFESSIONAL ENGINEER
No. 4176-C
HAWAII, U.S.A.

THIS WORK WAS PREPARED BY ME OR UNDER MY SUPERVISION.

STATE OF HAWAII
DEPARTMENT OF TRANSPORTATION
HIGHWAYS DIVISION

HAIKU ACCESS ROAD RESTORATION

PLAN - I

HAIKU ACCESS ROAD
H-3 FINISH (UNIT III)
FAIP NO. I-H3-1(75), UNIT III
T.K. TUNNEL / ACCESS ROADS

SCALE: 1" = 100' DATE: JUNE 1995

SHEET No. 9C2 OF 18 SHEETS

137218

FED. ROAD DIST. NO.	STATE	FED. AID PROJ. NO.	FISCAL YEAR	SHEET NO.	TOTAL SHEETS
HAWAII	HAW.	I-H3-1(75), UNIT III	1994	ADD. 329	353

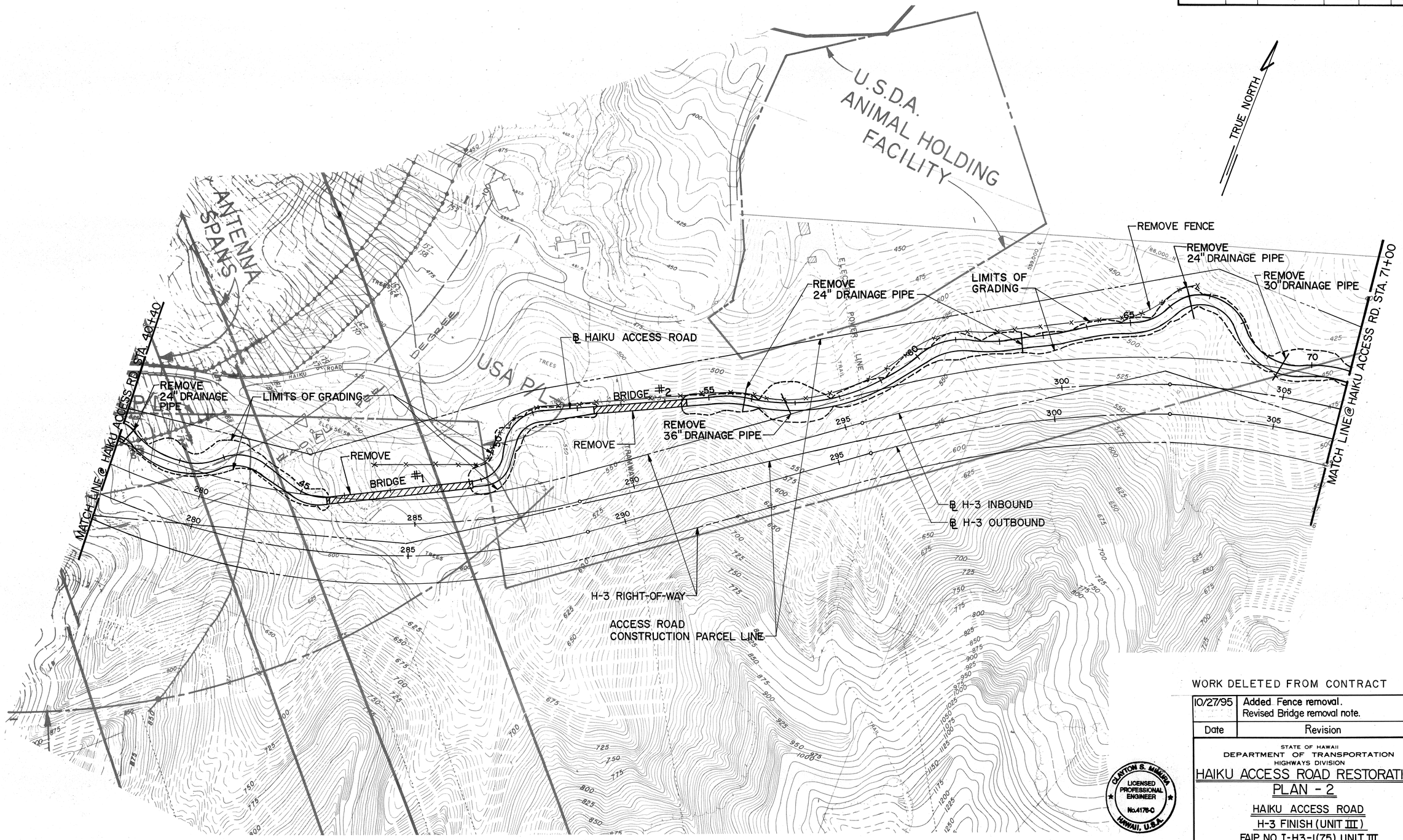

WORK DELETED FROM CONTRACT

Date	Revision
10/27/95	Added Fence removal. Revised Bridge removal note.

STATE OF HAWAII
DEPARTMENT OF TRANSPORTATION
HIGHWAYS DIVISION

HAIKU ACCESS ROAD RESTORATION
PLAN - 2

HAIKU ACCESS ROAD
H-3 FINISH (UNIT III)
FAIP NO. I-H3-1(75), UNIT III
T.K. TUNNEL / ACCESS ROADS

SCALE: 1" = 100' DATE: JUNE 1995

SHEET No. 9C3 OF 18 SHEETS

CLAYTON S. MIMURA
LICENSED PROFESSIONAL ENGINEER
No. 4176-C
HAWAII, U.S.A.

THIS WORK WAS PREPARED BY ME OR UNDER MY SUPERVISION.
Clayton S. Mimura

ORIGINAL PLAN		DATE
NOTE BOOK	SURVEY PLOTTED BY	
	DRAWN BY	
	TRACED BY	
	DESIGNED BY	
	QUANTITIES BY	
No.	CHECKED BY	

137218

ADD. 329

FED. ROAD DIST. NO.	STATE	FED. AID PROJ. NO.	FISCAL YEAR	SHEET NO.	TOTAL SHEETS
HAWAII	HAW.	I-H3-1(75), UNIT III	1994	ADD. 331	353

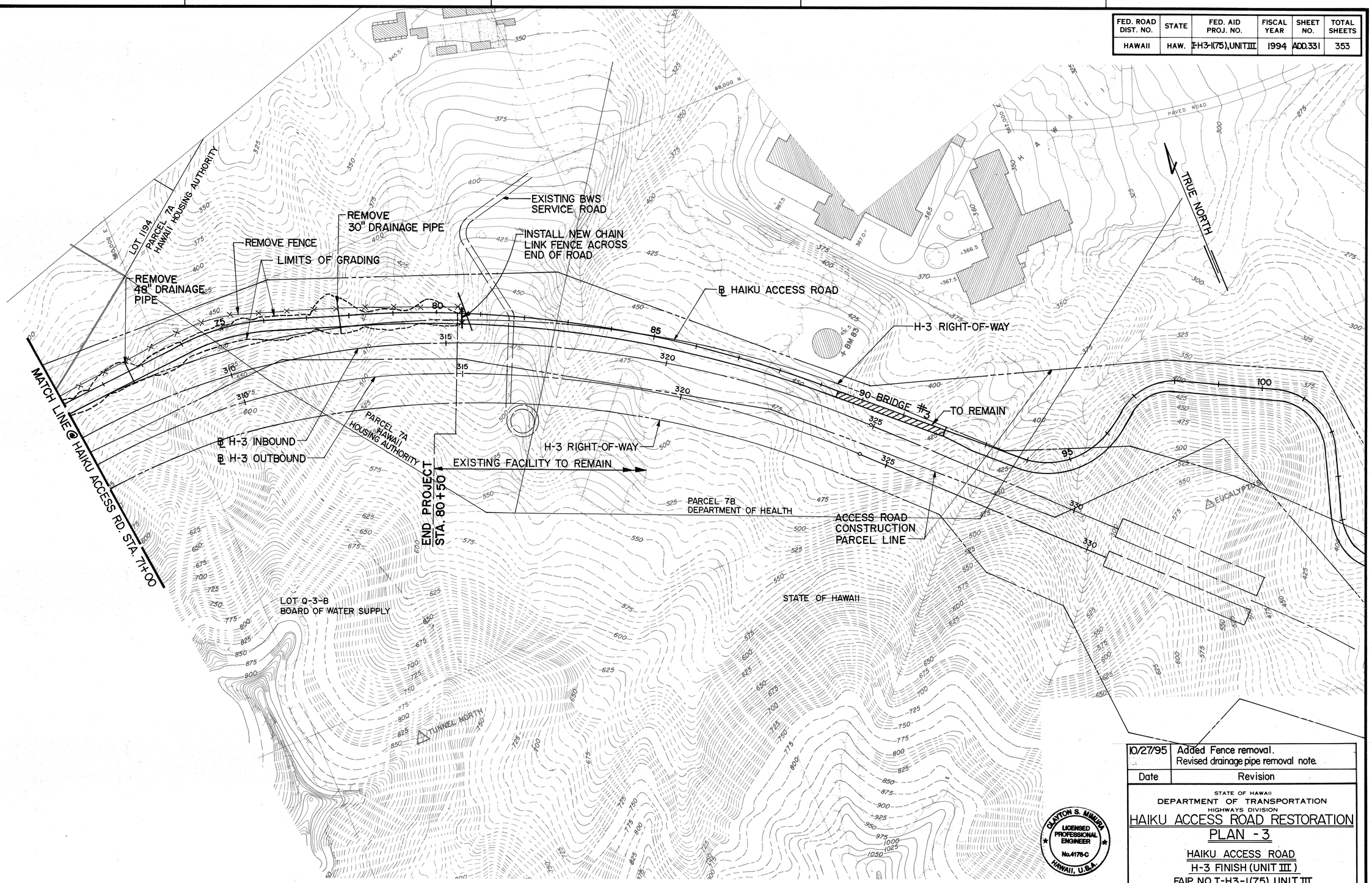

WORK DELETED FROM CONTRACT

0 100 200 300 400 FT
GRAPHIC SCALE

THIS WORK WAS PREPARED BY ME OR UNDER MY SUPERVISION.
Clayton S. Mimura

CLAYTON S. MIMURA
LICENSED PROFESSIONAL ENGINEER
No. 4178-C
HAWAII, U.S.A.

Date	Revision
10/27/95	Added Fence removal. Revised drainage pipe removal note.

STATE OF HAWAII
DEPARTMENT OF TRANSPORTATION
HIGHWAYS DIVISION

HAIKU ACCESS ROAD RESTORATION
PLAN - 3

HAIKU ACCESS ROAD
H-3 FINISH (UNIT III)
FAIP NO. I-H3-1(75), UNIT III
T.K. TUNNEL / ACCESS ROADS

SCALE: 1" = 100' DATE: JUNE 1995

SHEET No. 9C4 OF 18 SHEETS

ORIGINAL PLAN		SURVEY PLOTTED BY	DATE
		DRAWN BY	
		TRACED BY	
NOTE BOOK		DESIGNED BY	
		QUANTITIES BY	
No.		CHECKED BY	

137218

ADD. 330

FED. ROAD DIST. NO.	STATE	FED. AID PROJ. NO.	FISCAL YEAR	SHEET NO.	TOTAL SHEETS
HAWAII	HAW.	I-H3-1(75), UNIT III	1994	ADD.331	353

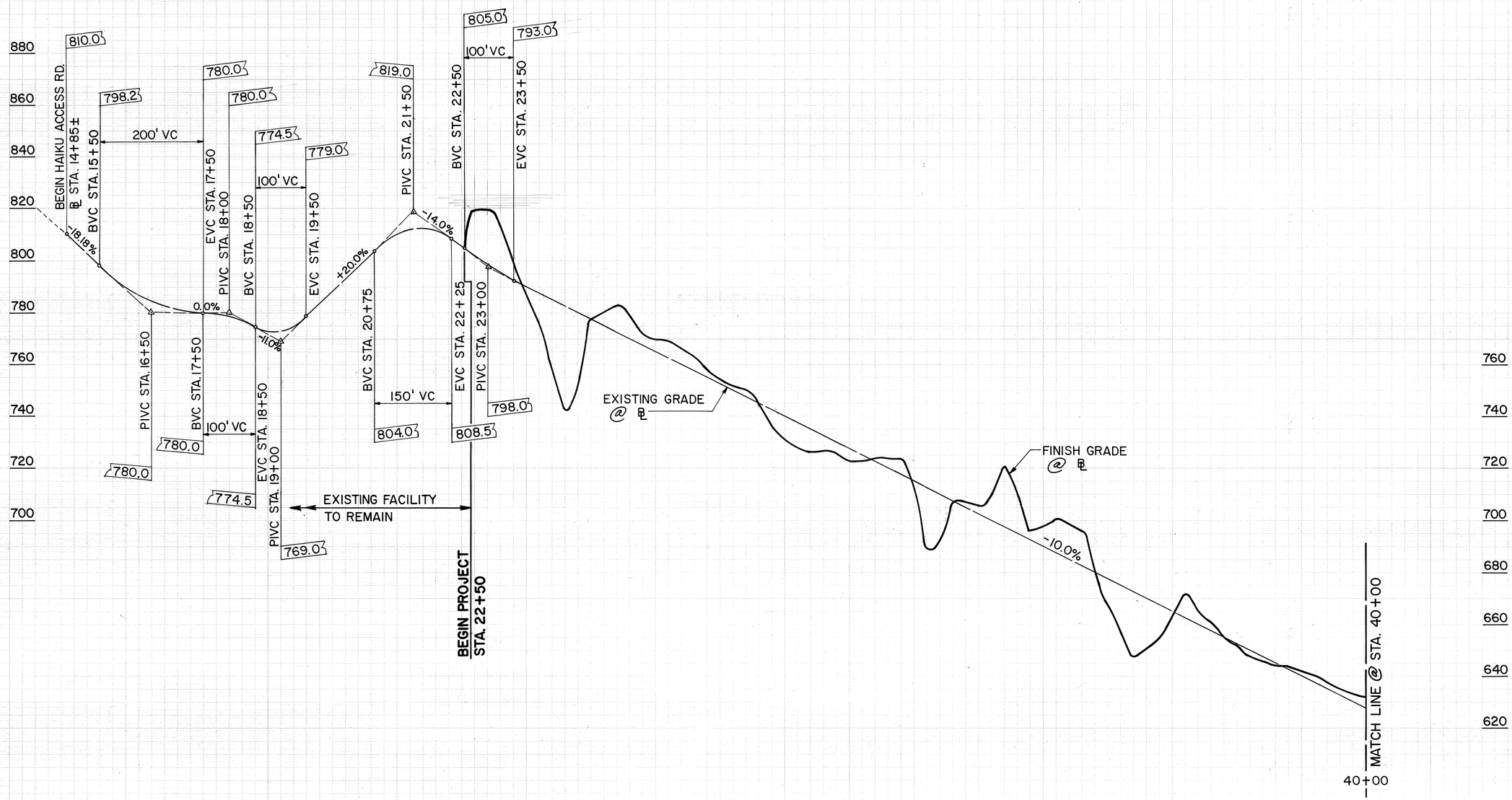

℄ PROFILE - HAIKU ACCESS RD.

SCALE: HORIZ. 1" = 100'
VERT. 1" = 20'

WORK DELETED FROM CONTRACT

Date	Revision
10/27/95	Removed original ground line.

STATE OF HAWAII
DEPARTMENT OF TRANSPORTATION
HIGHWAYS DIVISION

HAIKU ACCESS ROAD RESTORATION

PROFILE - 1

HAIKU ACCESS ROAD
H-3 FINISH (UNIT III)
FAIP NO. I-H3-1(75), UNIT III
T.K. TUNNEL / ACCESS ROADS

SCALE: AS SHOWN DATE: JUNE 1995

CLAYTON S. MIMURA
LICENSED PROFESSIONAL ENGINEER
No. 4178-C
HAWAII, U.S.A.

THIS WORK WAS PREPARED BY ME OR UNDER MY SUPERVISION.

Clayton S. Mimura

SHEET No. 9C5 OF 18 SHEETS

ADD. 331

ORIGINAL PLAN | SURVEY PLOTTED BY | DRAWN BY | TRACED BY | DESIGNED BY | QUANTITIES BY | CHECKED BY | DATE | NOTE BOOK No.

FED. ROAD DIST. NO.	STATE	FED. AID PROJ. NO.	FISCAL YEAR	SHEET NO.	TOTAL SHEETS
HAWAII	HAW.	I-H3-1(75), UNIT III	1994	ADD 332	353

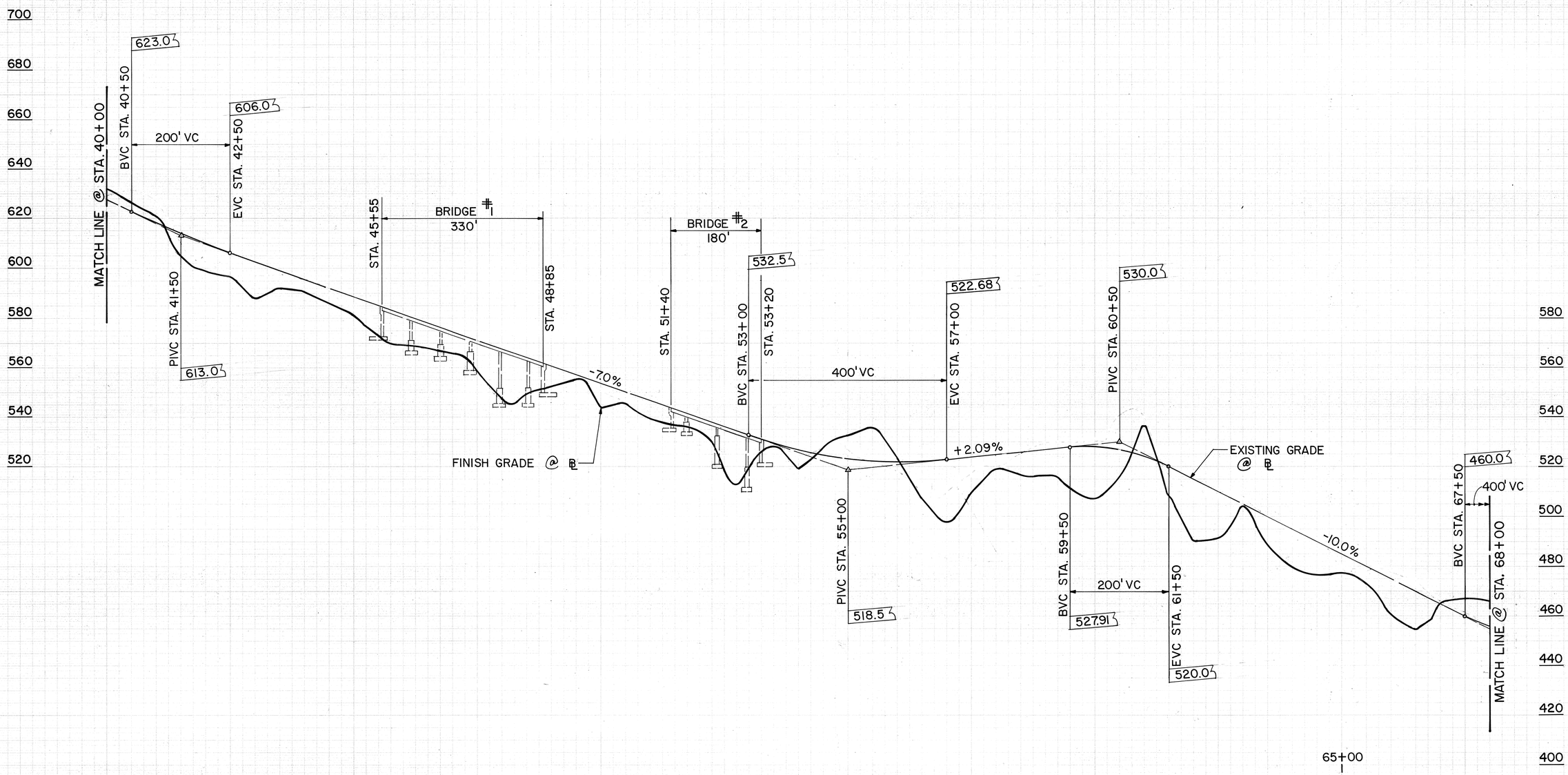

℄ PROFILE - HAIKU ACCESS RD.

SCALE: HORIZ. 1" = 100'
VERT. 1" = 20'

WORK DELETED FROM CONTRACT

Date	Revision
10/27/95	Removed original ground line.

STATE OF HAWAII
DEPARTMENT OF TRANSPORTATION
HIGHWAYS DIVISION

HAIKU ACCESS ROAD RESTORATION
PROFILE - 2

HAIKU ACCESS ROAD
H-3 FINISH (UNIT III)
FAIP NO. I-H3-1(75), UNIT III
T.K. TUNNEL / ACCESS ROADS

SCALE: AS SHOWN DATE: JUNE 1995

CLAYTON S. MINURA
LICENSED PROFESSIONAL ENGINEER
No. 4176-C
HAWAII, U.S.A.

THIS WORK WAS PREPARED BY ME OR UNDER MY SUPERVISION.

Clayton S. Minura

SHEET No. 9C6 OF 18 SHEETS

ADD. 332

		DATE
SURVEY PLOTTED BY		
DRAWN BY		
TRACED BY		
DESIGNED BY		
QUANTITIES BY		
CHECKED BY		

ORIGINAL PLAN — NOTE BOOK — No.

FED. ROAD DIST. NO.	STATE	FED. AID PROJ. NO.	FISCAL YEAR	SHEET NO.	TOTAL SHEETS
HAWAII	HAW.	I-H3-1(75), UNIT III	1994	ADD.333	353

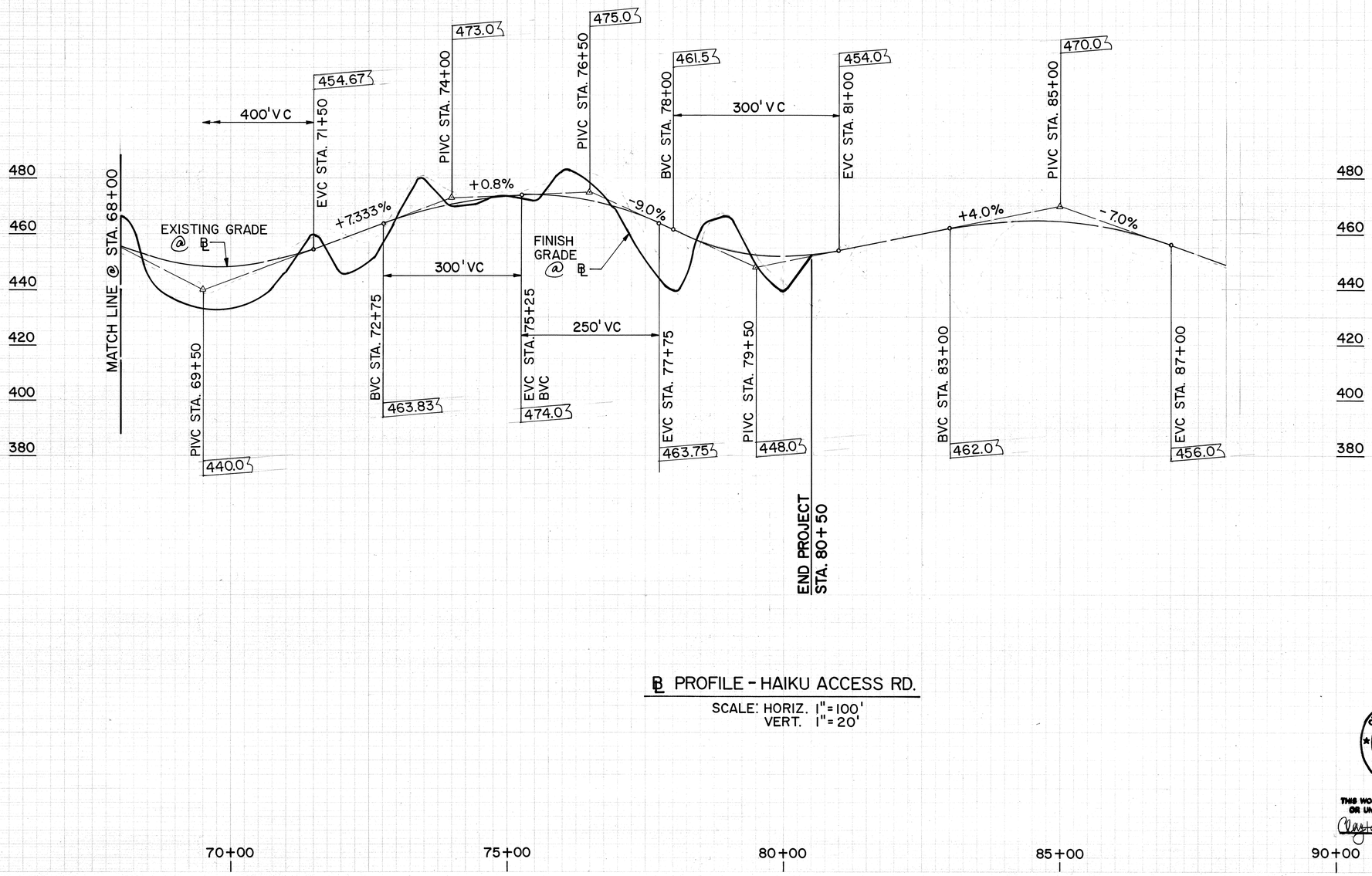

℄ PROFILE - HAIKU ACCESS RD.

SCALE: HORIZ. 1" = 100'
VERT. 1" = 20'

WORK DELETED FROM CONTRACT

ORIGINAL PLAN	SURVEY PLOTTED BY	DATE
	TRACED BY	
	TRACED BY	
NOTE BOOK	DESIGNED BY	
	QUANTITIES BY	
No.	CHECKED BY	

CLAYTON S. MINAKATA
LICENSED PROFESSIONAL ENGINEER
No. 4176-C
HAWAII, U.S.A.

THIS WORK WAS PREPARED BY ME OR UNDER MY SUPERVISION.

Clayton S. Minakata

Date	Revision
10/27/95	Removed original ground line.

STATE OF HAWAII
DEPARTMENT OF TRANSPORTATION
HIGHWAYS DIVISION

HAIKU ACCESS ROAD RESTORATION

PROFILE - 3

HAIKU ACCESS ROAD
H-3 FINISH (UNIT III)
FAIP NO. I-H3-1(75), UNIT III
T.K. TUNNEL/ACCESS ROADS

SCALE: AS SHOWN DATE: JUNE 1995

SHEET No. 9C7 OF 18 SHEETS

ADD. 333

FED. ROAD DIST. NO.	STATE	FED. AID PROJ. NO.	FISCAL YEAR	SHEET NO.	TOTAL SHEETS
HAWAII	HAW.	I-H3-1(75), UNIT III	1994	ADD. 334	353

LEGEND:

RESTORE

REMOVE

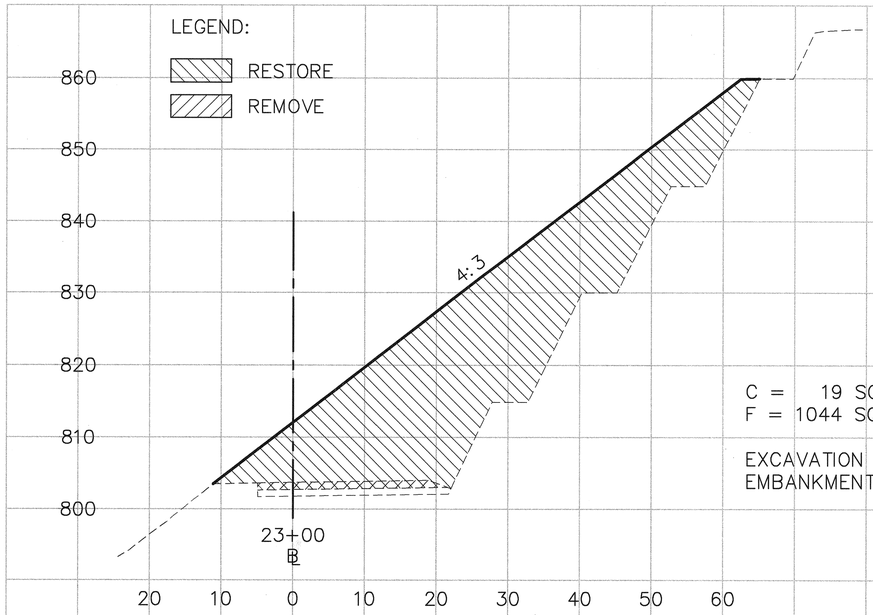

C = 19 SQ. FT.
F = 1044 SQ. FT.

EXCAVATION = 18 CU. YD.
EMBANKMENT = 977 CU. YD.

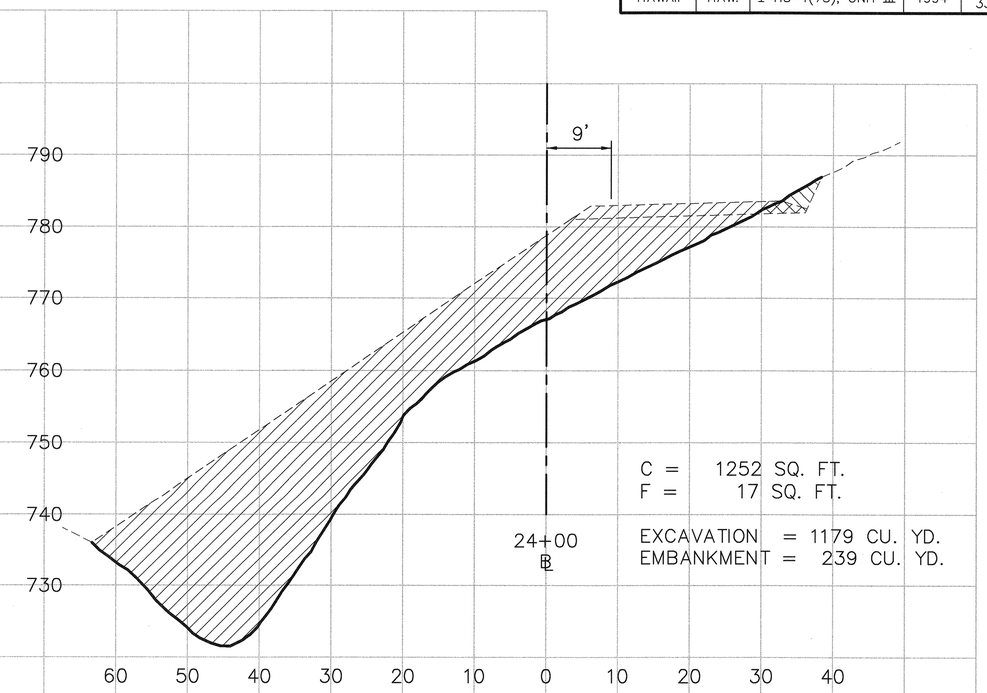

C = 1252 SQ. FT.
F = 17 SQ. FT.

EXCAVATION = 1179 CU. YD.
EMBANKMENT = 239 CU. YD.

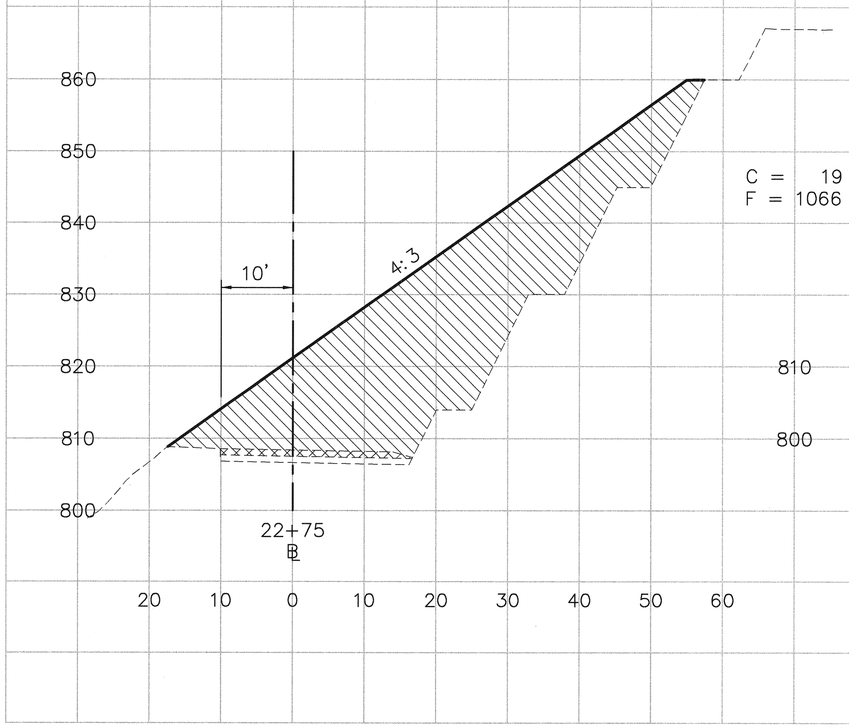

C = 19 SQ. FT.
F = 1066 SQ. FT.

NOTE: TRANSITION FILL SLOPE TO MEET EXISTING GRADES AT BEGINNING OF PROJECT.

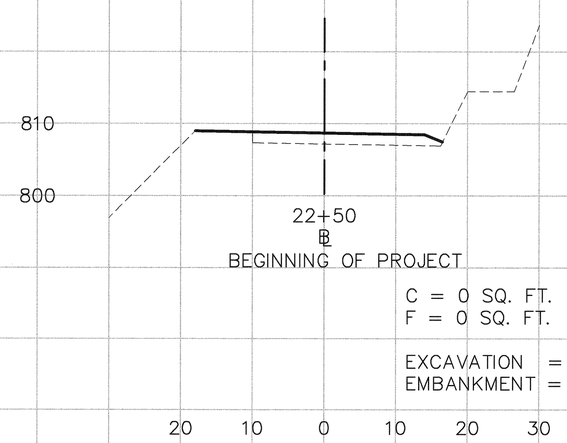

C = 0 SQ. FT.
F = 0 SQ. FT.

EXCAVATION = 9 CU. YD.
EMBANKMENT = 494 CU. YD.

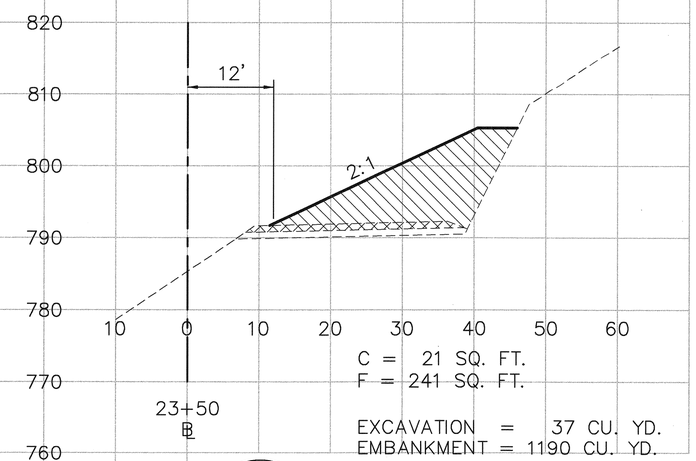

C = 21 SQ. FT.
F = 241 SQ. FT.

EXCAVATION = 37 CU. YD.
EMBANKMENT = 1190 CU. YD.

CLAYTON S. MIMURA
LICENSED PROFESSIONAL ENGINEER
No. 4176-C
HAWAII, U.S.A.

THIS WORK WAS PREPARED BY ME OR UNDER MY SUPERVISION.

Clayton S. Mimura

10/27/95	Added Note
Date	Revision

HAIKU ACCESS ROAD

Scale: Horiz. 1" = 10'
Vert. 1" = 10'

WORK DELETED FROM CONTRACT

SHEET NO. 9C8 OF 18 SHEETS

ADD.334

ORIGINAL PLAN		
	SURVEY PLOTTED BY	DATE
	DRAWN BY	
	TRACED BY	
NOTE BOOK	DESIGNED BY	
	QUANTITIES BY	
No.	CHECKED BY	

CAD by J. Mimura, 55-52

Last Saved: J:\H3RF\U3\HQVM\XSEC01A.dwg 10/20/95 at 09:48

FED. ROAD DIST. NO.	STATE	FED. AID PROJ. NO.	FISCAL YEAR	SHEET NO.	TOTAL SHEETS
HAWAII	HAW.	I-H3-1(75), UNIT III	1994	335	353

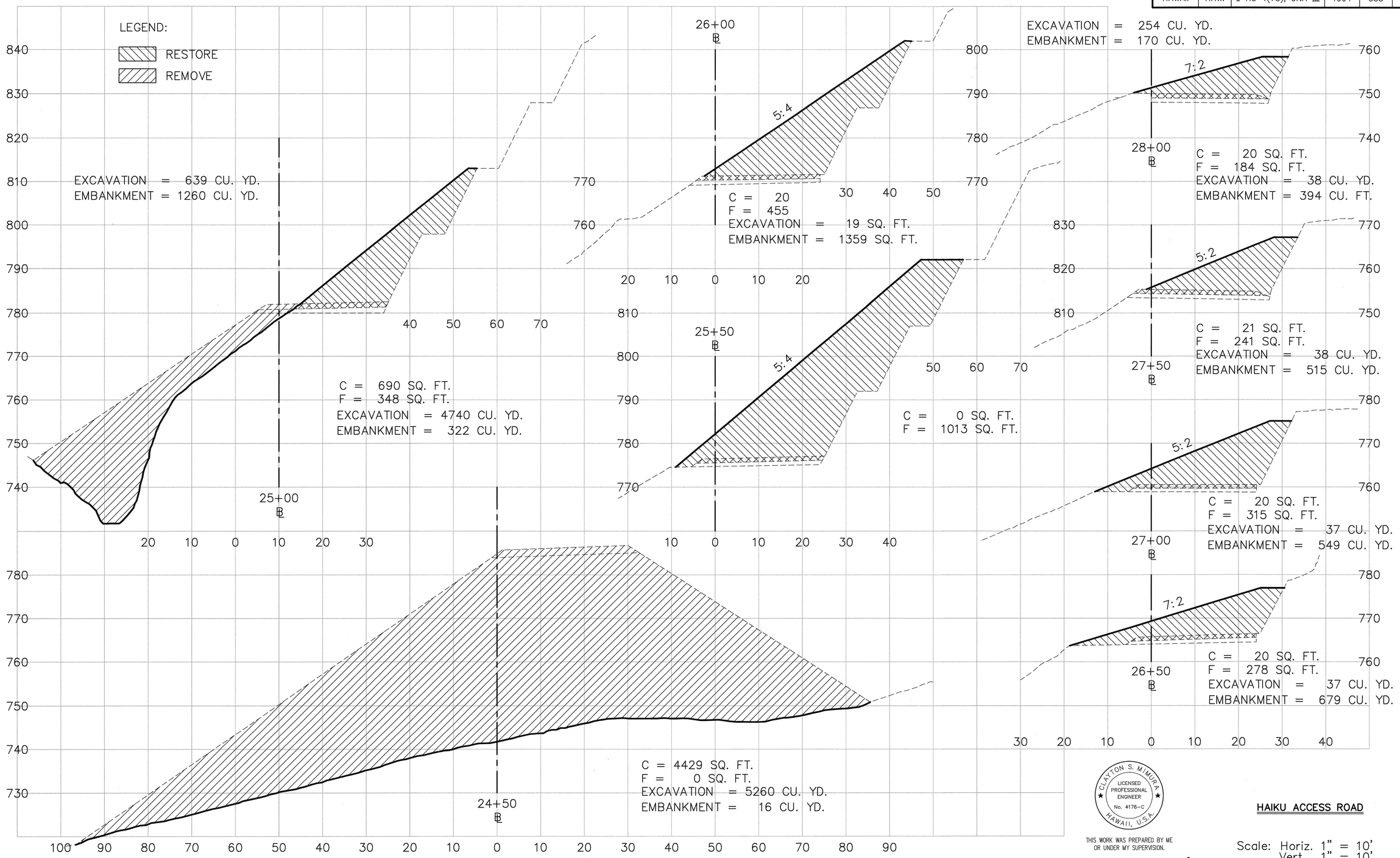

WORK DELETED FROM CONTRACT

CLAYTON S. MIMURA
LICENSED PROFESSIONAL ENGINEER
No. 4176-C
HAWAII, U.S.A.

THIS WORK WAS PREPARED BY ME OR UNDER MY SUPERVISION.

Clayton S. Mimura

HAIKU ACCESS ROAD

Scale: Horiz. 1" = 10'
Vert. 1" = 10'

SHEET NO. 9C9 OF 18 SHEETS

ORIGINAL PLAN
SURVEY PLOTTED BY ____ DATE
DRAWN BY
TRACED BY
NOTE BOOK DESIGNED BY
QUANTITIES BY
No. CHECKED BY

CAD by J. Mimura, 55-52

Last Saved: J:\H3RF\U3\HQVM\XSEC02A.dwg 06/15/95 at 16:43

FED. ROAD DIST. NO.	STATE	FED. AID PROJ. NO.	FISCAL YEAR	SHEET NO.	TOTAL SHEETS
HAWAII	HAW.	I-H3-1(75), UNIT III	1994	336	353

LEGEND:

RESTORE

REMOVE

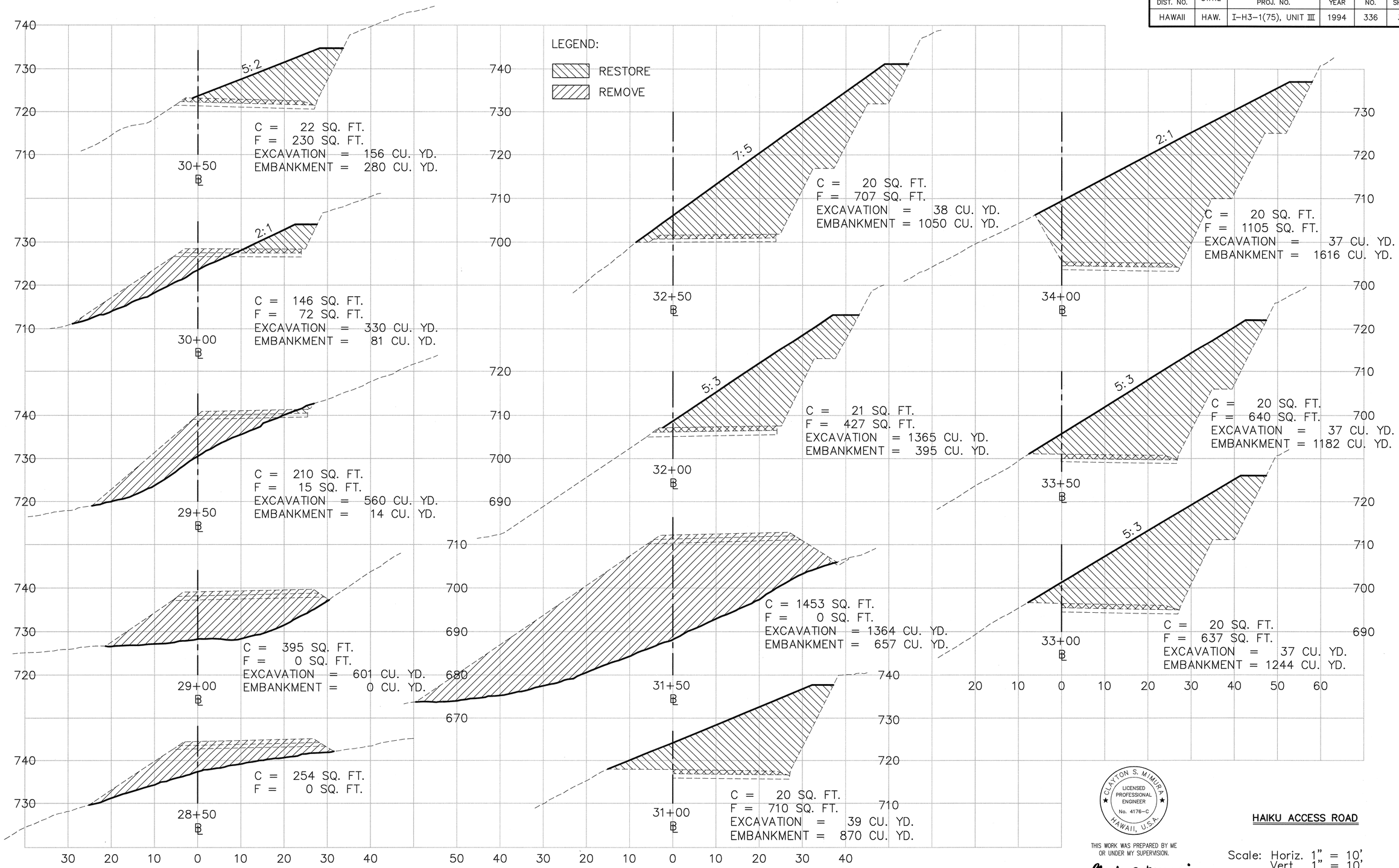

ORIGINAL PLAN
SURVEY PLOTTED BY
DRAWN BY
TRACED BY
DESIGNED BY
QUANTITIES BY
CHECKED BY
DATE
NOTE BOOK
No.

CAD by J. Mimura, 55-52

Last Saved: J:\H3RF\U3\HQVM\XSEC03A.dwg 06/15/95 at 16:42

CLAYTON S. MIMURA
LICENSED PROFESSIONAL ENGINEER
No. 4176-C
HAWAII, U.S.A.

THIS WORK WAS PREPARED BY ME OR UNDER MY SUPERVISION.

Clayton S. Mimura

WORK DELETED FROM CONTRACT

HAIKU ACCESS ROAD

Scale: Horiz. 1" = 10'
Vert. 1" = 10'

SHEET NO. 9C10 OF 18 SHEETS

FED. ROAD DIST. NO.	STATE	FED. AID PROJ. NO.	FISCAL YEAR	SHEET NO.	TOTAL SHEETS
HAWAII	HAW.	I-H3-1(75), UNIT III	1994	ADD. 337	353

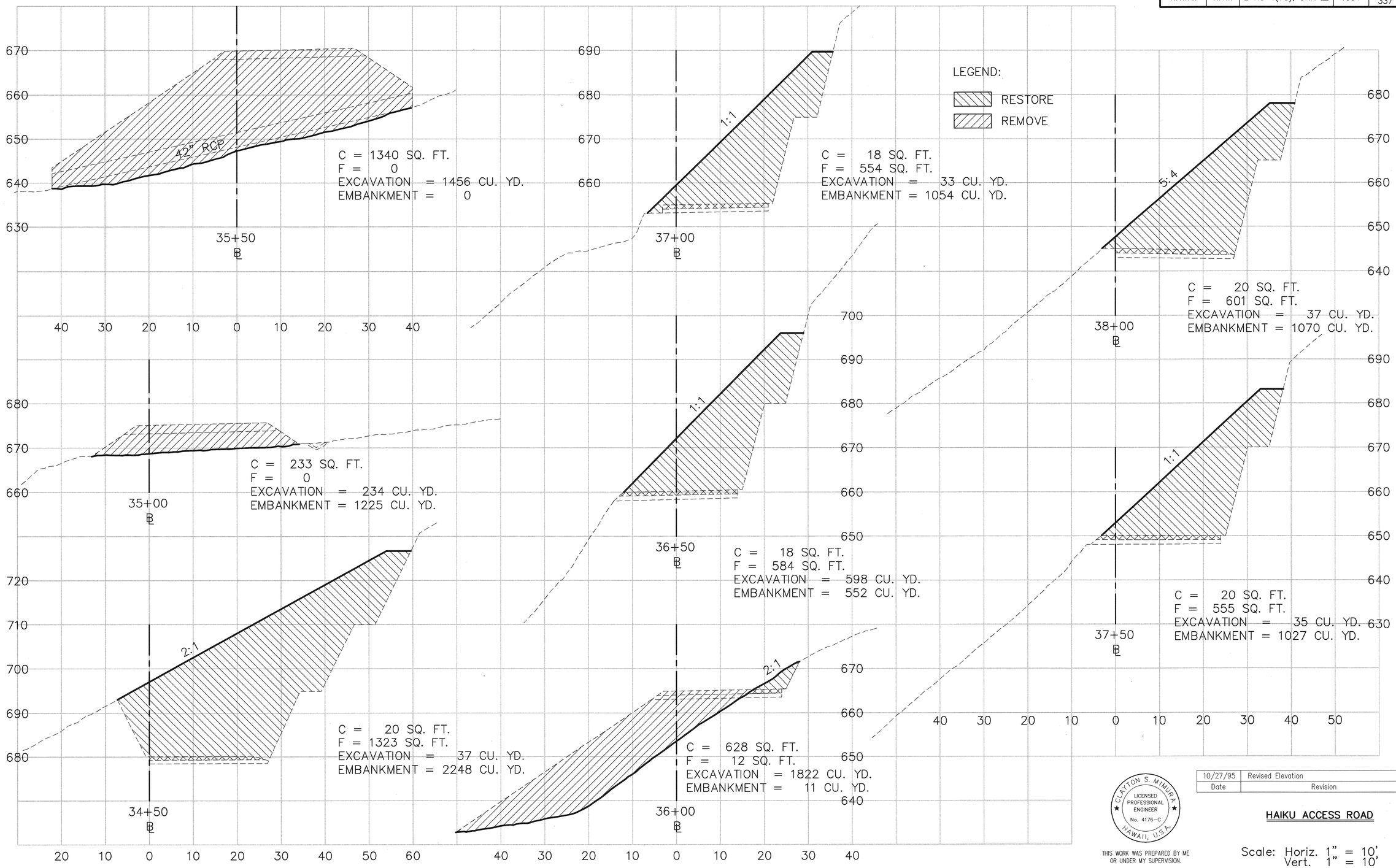

Date	Revision
10/27/95	Revised Elevation

CLAYTON S. MIMURA
LICENSED PROFESSIONAL ENGINEER
No. 4176-C
HAWAII, U.S.A.

THIS WORK WAS PREPARED BY ME OR UNDER MY SUPERVISION.

Clayton S. Mimura

HAIKU ACCESS ROAD

Scale: Horiz. 1" = 10'
Vert. 1" = 10'

WORK DELETED FROM CONTRACT

SHEET NO. 9C11 OF 18 SHEETS

ORIGINAL PLAN
SURVEY BY
DRAWN BY
TRACED BY
DESIGNED BY
QUANTITIES BY
CHECKED BY
DATE
NOTE BOOK No.

CAD by J. Mimura, 55-52

Last Saved: J:\H3RF\U3\HQVM\XSEC04A.dwg 10/20/95 at 09:58

ADD.337

FED. ROAD DIST. NO.	STATE	FED. AID PROJ. NO.	FISCAL YEAR	SHEET NO.	TOTAL SHEETS
HAWAII	HAW.	I-H3-1(75), UNIT III	1994	338	353

LEGEND:

RESTORE

REMOVE

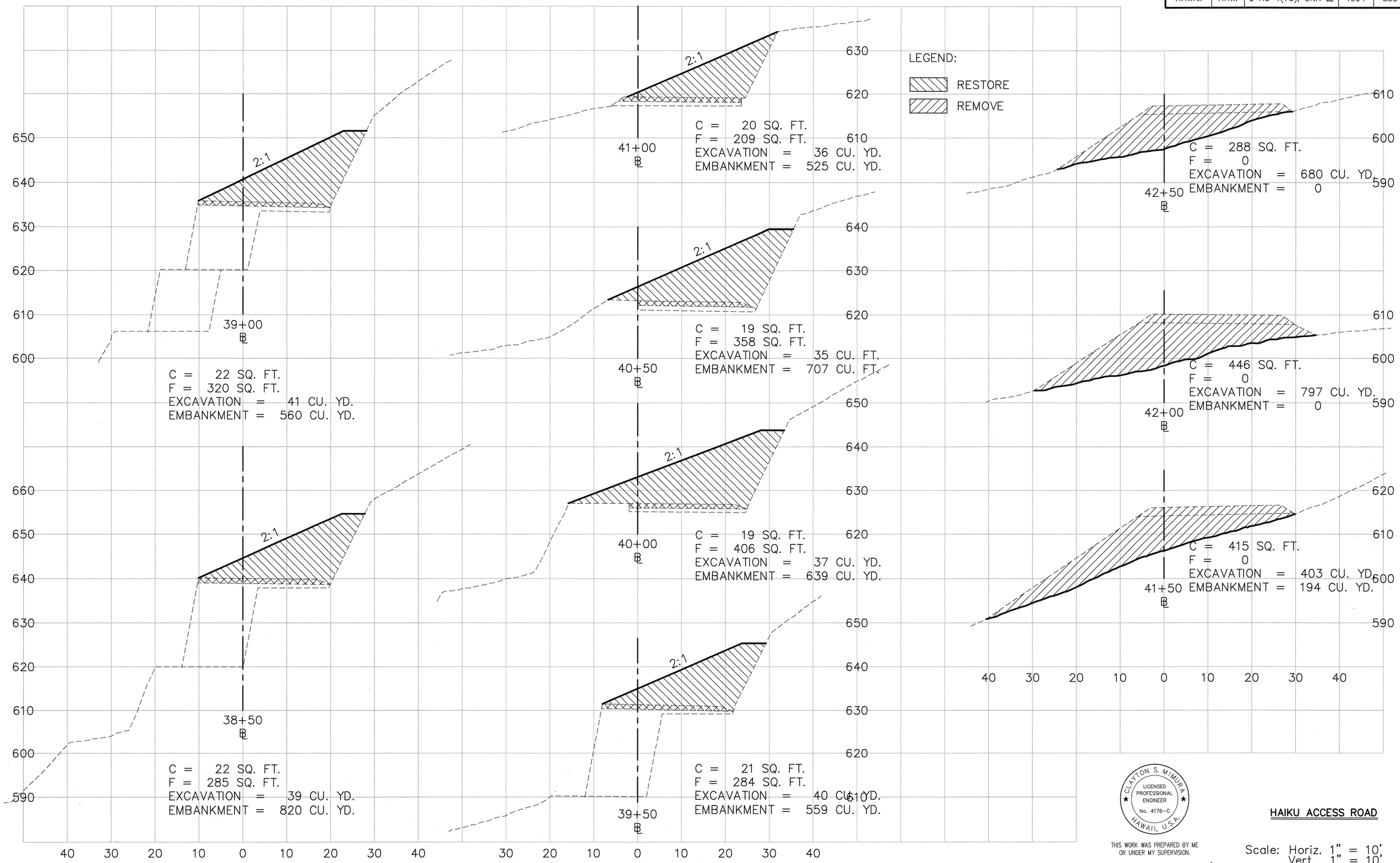

WORK DELETED FROM CONTRACT

CLAYTON S. MIMURA
LICENSED PROFESSIONAL ENGINEER
No. 4176-C
HAWAII, U.S.A.

THIS WORK WAS PREPARED BY ME OR UNDER MY SUPERVISION.

Clayton S. Mimura

HAIKU ACCESS ROAD

Scale: Horiz. 1" = 10'
Vert. 1" = 10'

SHEET NO. 9C12 OF 18 SHEETS

ORIGINAL PLAN
SURVEY PLOTTED BY ____ DATE
DRAWN BY ____
TRACED BY ____
DESIGNED BY ____
QUANTITIES BY ____
CHECKED BY ____
NOTE BOOK No.

CAD by J. MIMURA, 55-52

Last Saved: J:\H3RF\U3\HQVM\XSEC05A.dwg 06/15/95 at 16:41

FED. ROAD DIST. NO.	STATE	FED. AID PROJ. NO.	FISCAL YEAR	SHEET NO.	TOTAL SHEETS
HAWAII	HAW.	I-H3-1(75), UNIT III	1994	339	353

LEGEND:

RESTORE

REMOVE

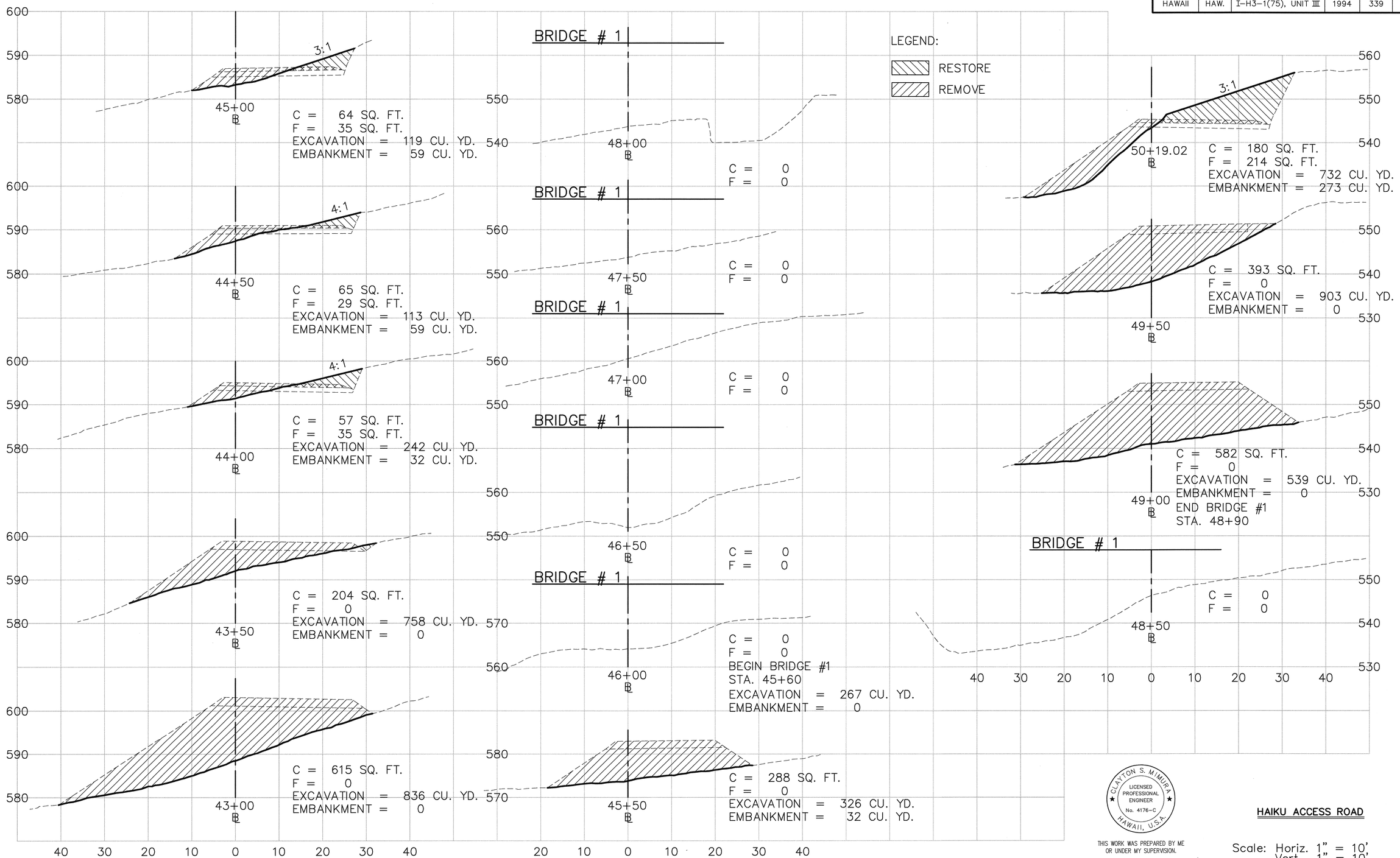

WORK DELETED FROM CONTRACT

CLAYTON S. MIMURA
LICENSED PROFESSIONAL ENGINEER
No. 4176-C
HAWAII, U.S.A.

THIS WORK WAS PREPARED BY ME OR UNDER MY SUPERVISION.

Clayton S. Mimura

HAIKU ACCESS ROAD

Scale: Horiz. 1" = 10'
Vert. 1" = 10'

SHEET NO. 9C13 OF 18 SHEETS

339

ORIGINAL PLAN	SURVEY PLOTTED BY	DATE
	DRAWN BY	
	TRACED BY	
NOTE BOOK	DESIGNED BY	
	QUANTITIES BY	
No.	CHECKED BY	

CAD by C. Rivera, 55-52

Last Saved: J:\H3RF\U3\HQVM\XSEC06A.dwg 06/15/95 at 16:40

FED. ROAD DIST. NO.	STATE	FED. AID PROJ. NO.	FISCAL YEAR	SHEET NO.	TOTAL SHEETS
HAWAII	HAW.	I-H3-1(75), UNIT III	1994	340	353

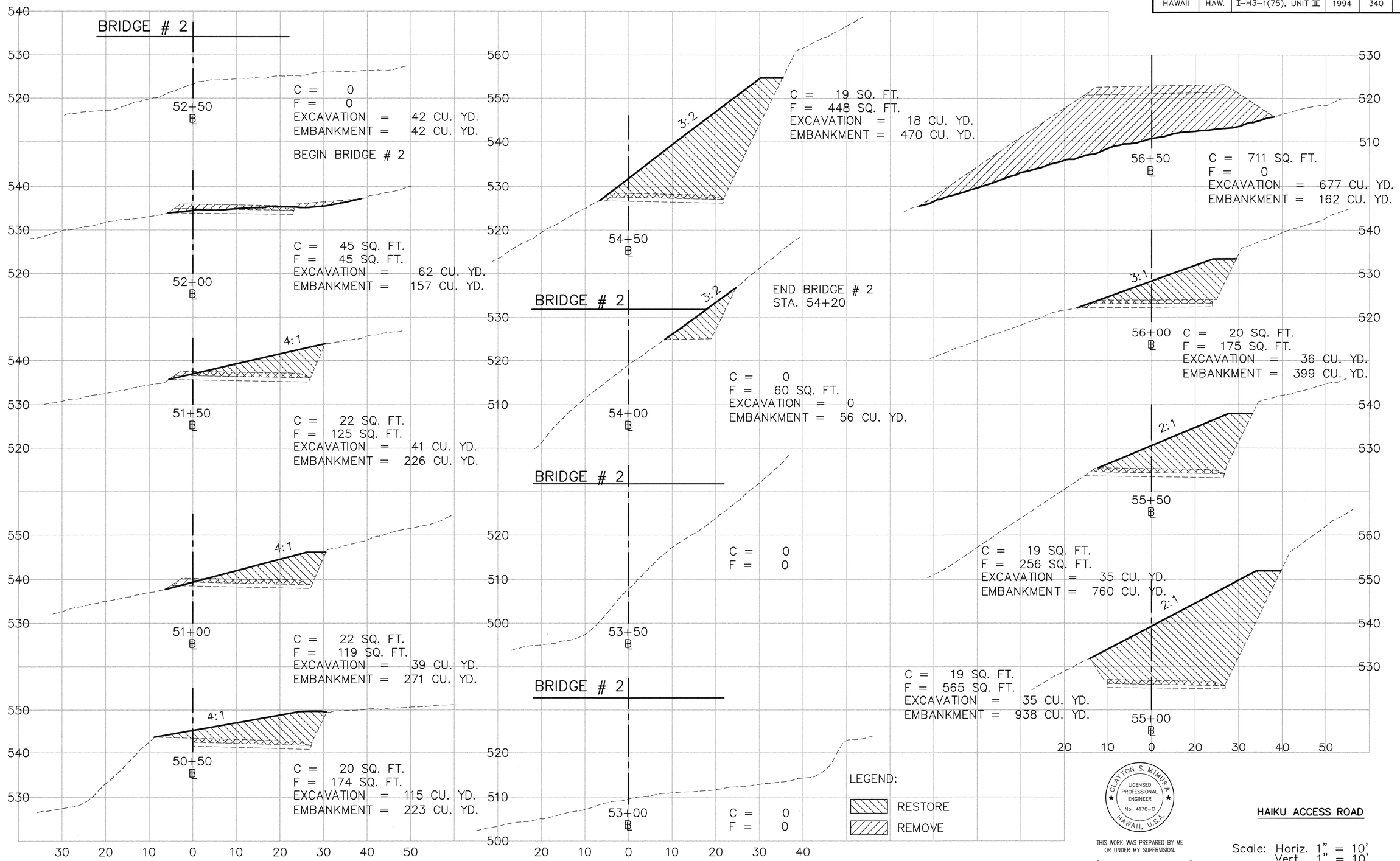

HAIKU ACCESS ROAD

Scale: Horiz. 1" = 10'
Vert. 1" = 10'

SHEET NO. 9C14 OF 18 SHEETS

ORIGINAL PLAN
SURVEY PLOTTED BY ____ DATE ____
DRAWN BY ____
TRACED BY ____
NOTE BOOK DESIGNED BY ____
QUANTITIES BY ____
CHECKED BY ____
No. ____

CAD by C. Rivera, 55-52

Last Saved: J:\H3RF\U3\HQVM\XSEC07A.dwg 06/15/95 at 16:39

FED. ROAD DIST. NO.	STATE	FED. AID PROJ. NO.	FISCAL YEAR	SHEET NO.	TOTAL SHEETS
HAWAII	HAW.	I-H3-1(75), UNIT III	1994	341	353

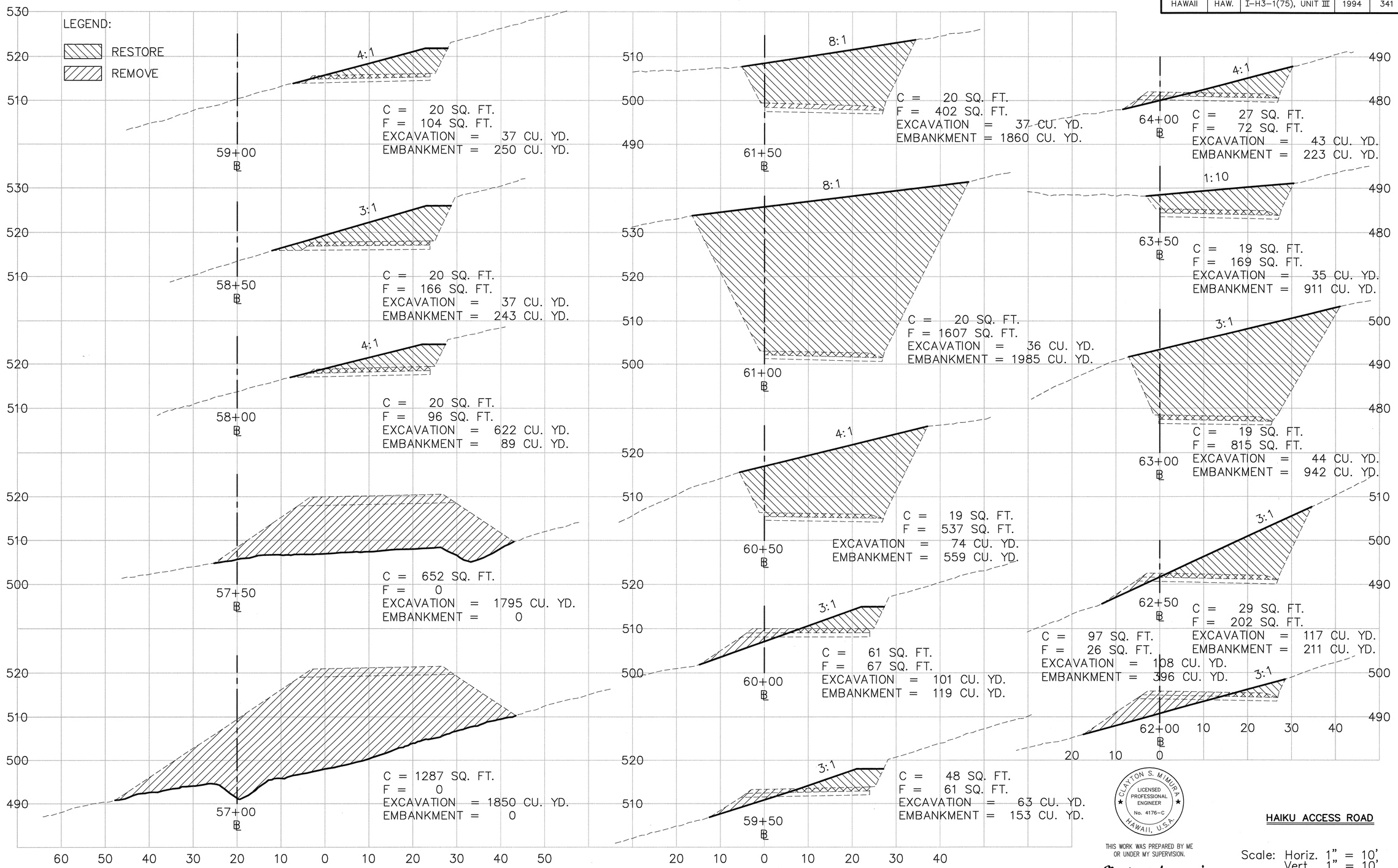

WORK DELETED FROM CONTRACT

CLAYTON S. MIMURA
LICENSED PROFESSIONAL ENGINEER
No. 4176-C
HAWAII, U.S.A.

THIS WORK WAS PREPARED BY ME OR UNDER MY SUPERVISION.

Clayton S. Mimura

HAIKU ACCESS ROAD

Scale: Horiz. 1" = 10'
Vert. 1" = 10'

SHEET NO. 9C15 OF 18 SHEETS

ORIGINAL PLAN	SURVEY PLOTTED BY	DATE
	DRAWN BY	
	TRACED BY	
NOTE BOOK	DESIGNED BY	
	QUANTITIES BY	
No.	CHECKED BY	

CAD by C. Rivera, 55-52

Last Saved: J:\H3RF\U3\HQVM\XSEC08A.dwg 06/15/95 at 16:39

FED. ROAD DIST. NO.	STATE	FED. AID PROJ. NO.	FISCAL YEAR	SHEET NO.	TOTAL SHEETS
HAWAII	HAW.	I-H3-1(75), UNIT III	1994	ADD. 342	353

LEGEND:

RESTORE

REMOVE

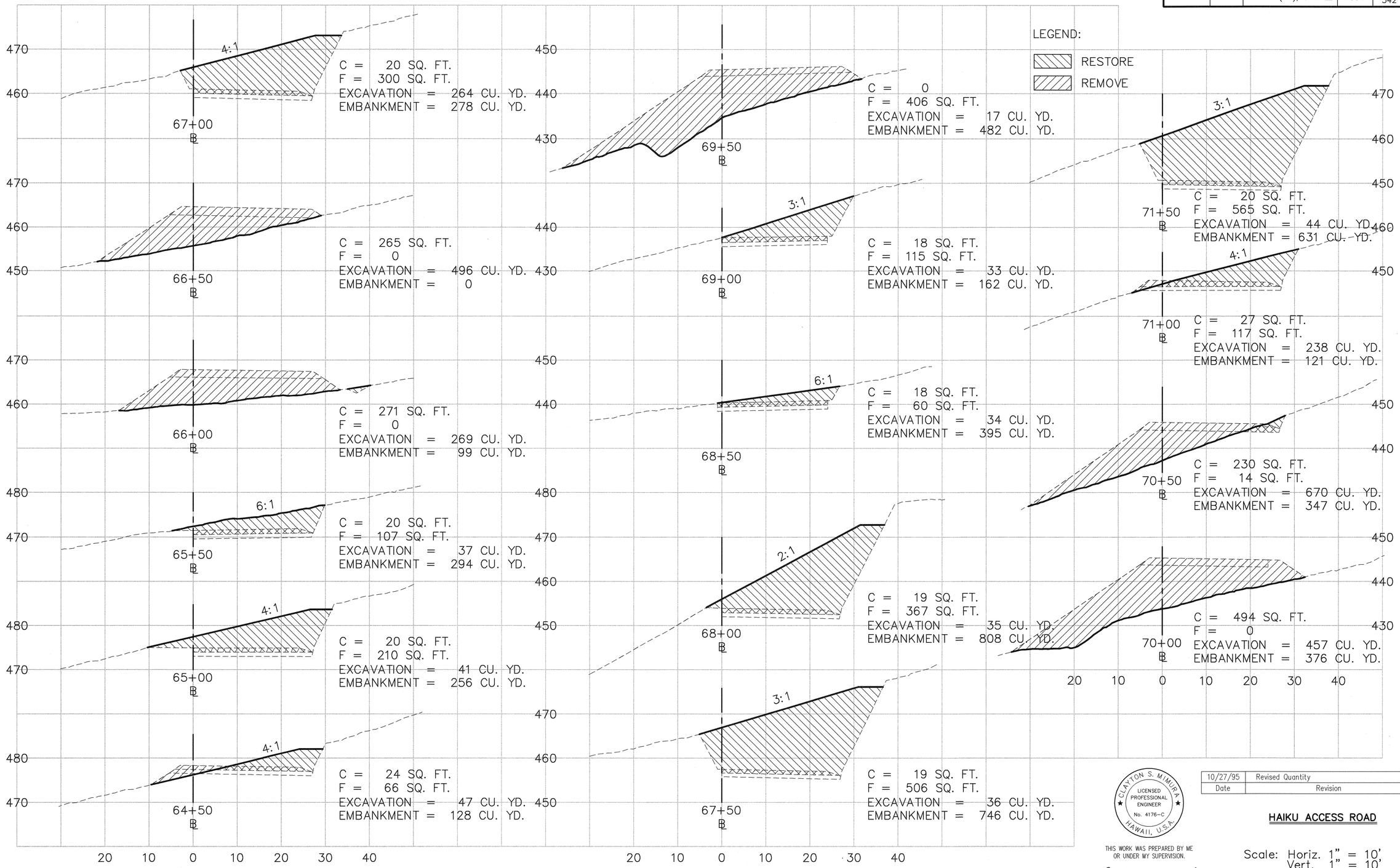

WORK DELETED FROM CONTRACT

ORIGINAL PLAN	SURVEY PLOTTED BY	DATE
	DRAWN BY	
	TRACED BY	
NOTE BOOK	DESIGNED BY	
	CHANGED BY	
	CHECKED BY	
No.		

CAD by J. Mimura, 55-52

Last Saved: J:\H3RF\U3\HQVM\XSEC09A.dwg 10/20/95 at 10:12

CLAYTON S. MIMURA LICENSED PROFESSIONAL ENGINEER No. 4176-C HAWAII, U.S.A.

THIS WORK WAS PREPARED BY ME OR UNDER MY SUPERVISION.

Clayton S. Mimura

Date	Revision
10/27/95	Revised Quantity

HAIKU ACCESS ROAD

Scale: Horiz. 1" = 10'
Vert. 1" = 10'

SHEET NO. 9C16 OF 18 SHEETS

ADD.342

FED. ROAD DIST. NO.	STATE	FED. AID PROJ. NO.	FISCAL YEAR	SHEET NO.	TOTAL SHEETS
HAWAII	HAW.	I-H3-1(75), UNIT III	1994	343	353

LEGEND:

RESTORE

REMOVE

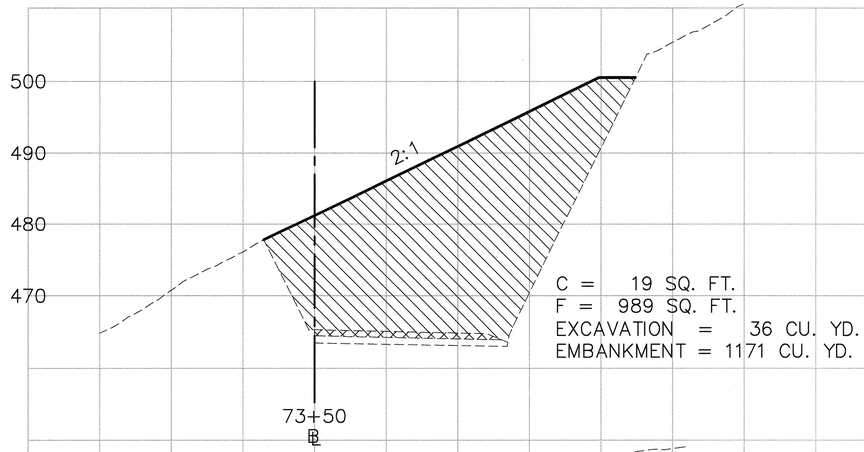

C = 19 SQ. FT.
F = 989 SQ. FT.
EXCAVATION = 36 CU. YD.
EMBANKMENT = 1171 CU. YD.

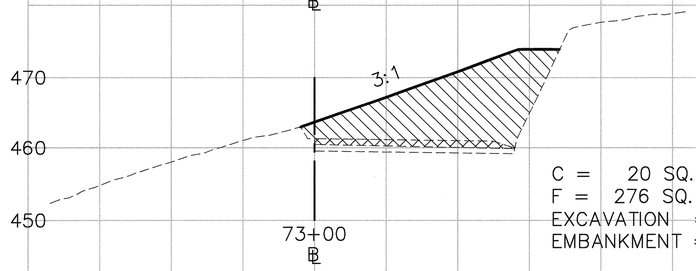

C = 20 SQ. FT.
F = 276 SQ. FT.
EXCAVATION = 242 CU. YD.
EMBANKMENT = 258 CU. YD.

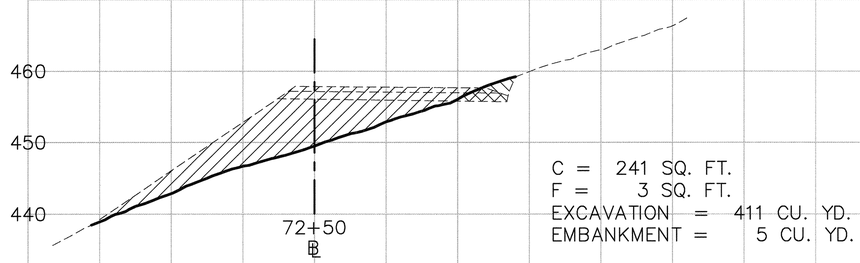

C = 241 SQ. FT.
F = 3 SQ. FT.
EXCAVATION = 411 CU. YD.
EMBANKMENT = 5 CU. YD.

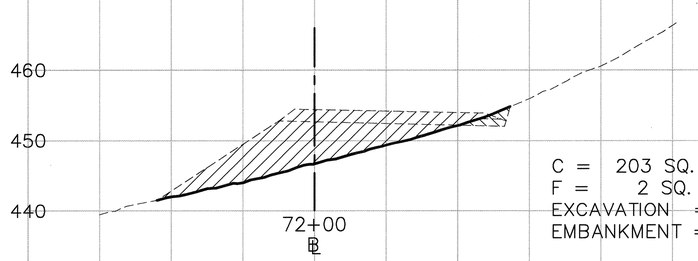

C = 203 SQ. FT.
F = 2 SQ. FT.
EXCAVATION = 206 CU. YD.
EMBANKMENT = 525 CU. YD.

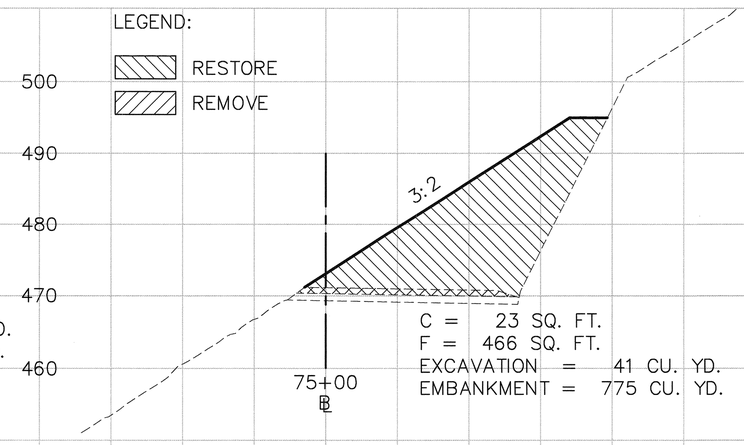

C = 23 SQ. FT.
F = 466 SQ. FT.
EXCAVATION = 41 CU. YD.
EMBANKMENT = 775 CU. YD.

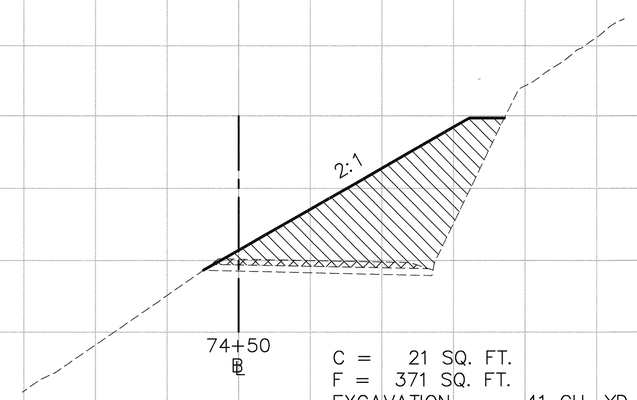

C = 21 SQ. FT.
F = 371 SQ. FT.
EXCAVATION = 41 CU. YD.
EMBANKMENT = 707 CU. YD.

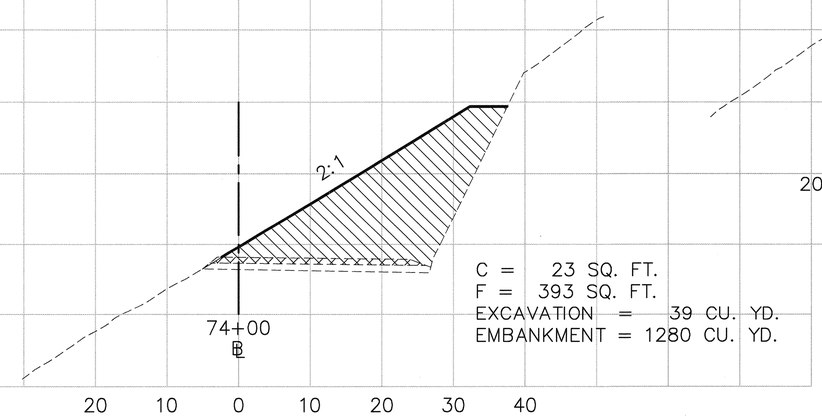

C = 23 SQ. FT.
F = 393 SQ. FT.
EXCAVATION = 39 CU. YD.
EMBANKMENT = 1280 CU. YD.

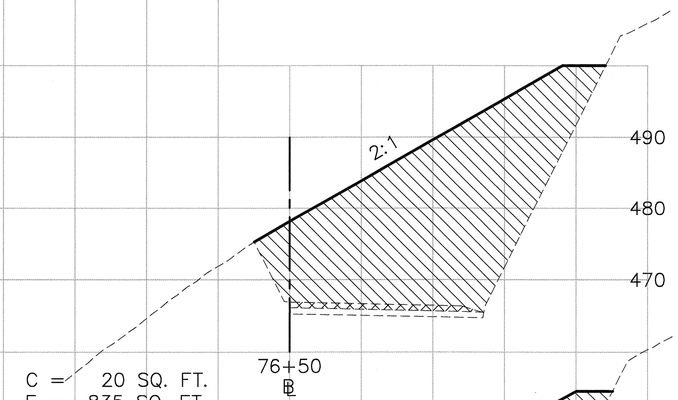

C = 20 SQ. FT.
F = 835 SQ. FT.
EXCAVATION = 37 CU. YD.
EMBANKMENT = 1630 CU. YD.

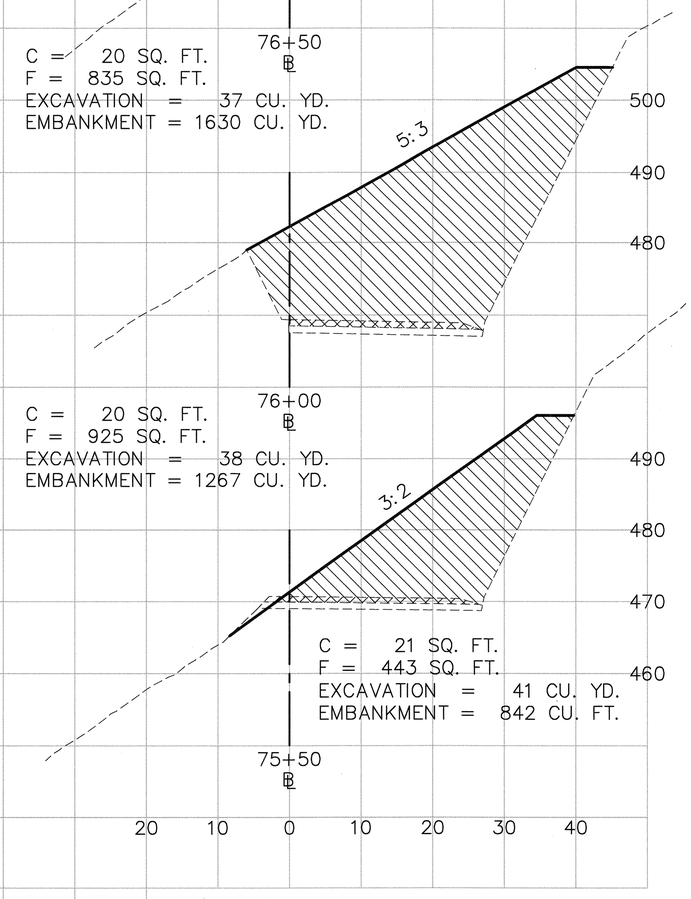

C = 20 SQ. FT.
F = 925 SQ. FT.
EXCAVATION = 38 CU. YD.
EMBANKMENT = 1267 CU. YD.

C = 21 SQ. FT.
F = 443 SQ. FT.
EXCAVATION = 41 CU. YD.
EMBANKMENT = 842 CU. FT.

30 20 10 0 10 20 30 40

20 10 0 10 20 30 40

WORK DELETED FROM CONTRACT

CLAYTON S. MIMURA
LICENSED PROFESSIONAL ENGINEER
No. 4176-C
HAWAII, U.S.A.

THIS WORK WAS PREPARED BY ME OR UNDER MY SUPERVISION.

Clayton S. Mimura

HAIKU ACCESS ROAD

Scale: Horiz. 1" = 10'
Vert. 1" = 10'

SHEET NO. 9C17 OF 18 SHEETS

343

ORIGINAL PLANS | SURVEY PLOTTED BY | DRAWN BY | TRACED BY | DESIGNED BY | QUANTITIES BY | CHECKED BY | DATE

NOTE BOOK No.

CAD by C. Rivera, 55-52

Last Saved: J:\H3RF\U3\HQVM\XSEC10A.dwg 06/15/95 at 16:14

FED. ROAD DIST. NO.	STATE	FED. AID PROJ. NO.	FISCAL YEAR	SHEET NO.	TOTAL SHEETS
HAWAII	HAW.	I-H3-1(75), UNIT III	1994	ADD. 344	353

LEGEND:

RESTORE

REMOVE

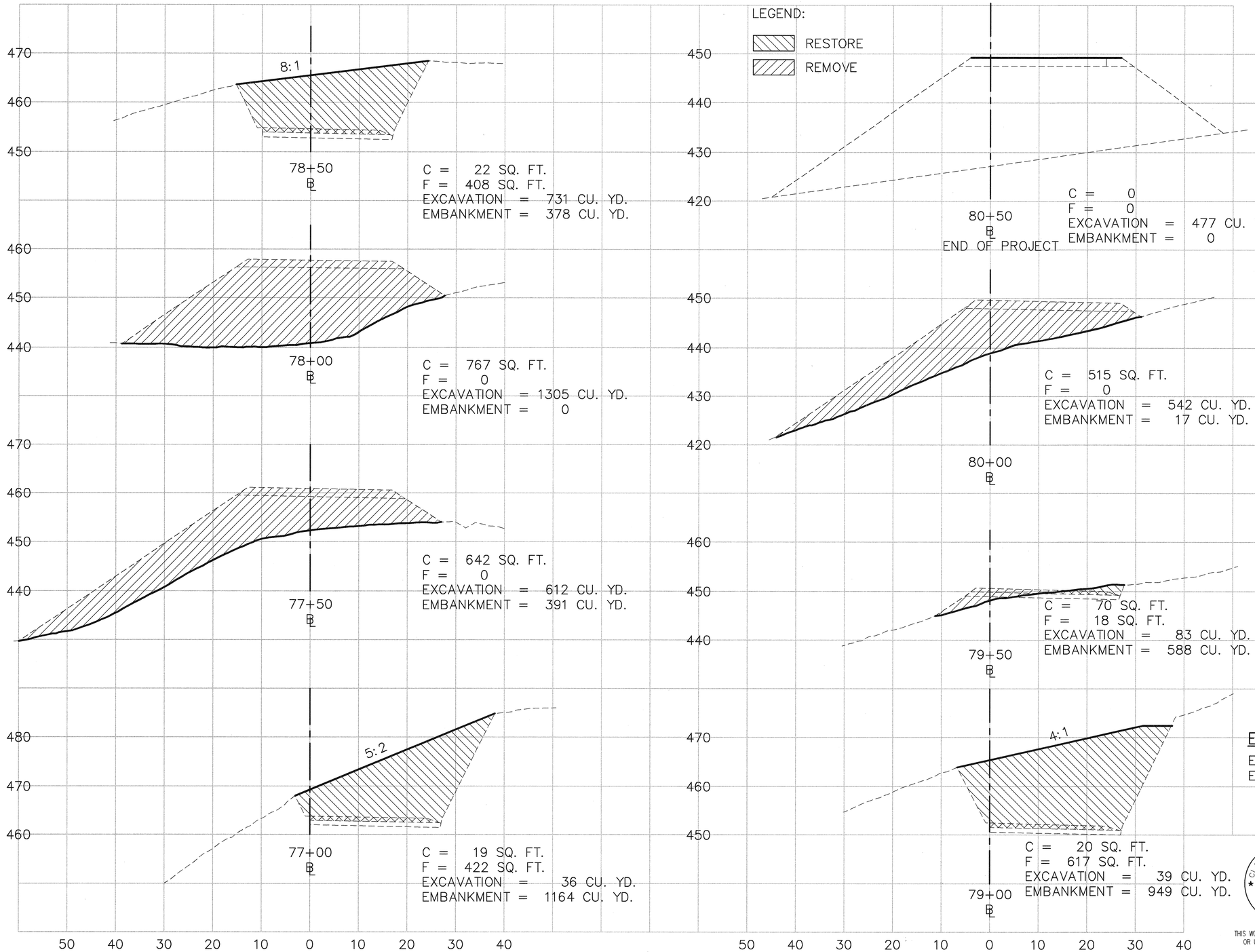

NOTE: TRANSITION EXCAVATION TO MEET EXISTING GRADES AT END OF PROJECT. MAINTAIN 2H:1V SLOPE AT END OF ACCESS ROAD.

EARTHWORK SUMMARY

EXCAVATION = 41,836 CU. YD.
EMBANKMENT = 55,915 CU. YD.

WORK DELETED FROM CONTRACT

CLAYTON S. MIMURA
LICENSED PROFESSIONAL ENGINEER
No. 4176-C
HAWAII, U.S.A.

THIS WORK WAS PREPARED BY ME OR UNDER MY SUPERVISION.

Clayton S. Mimura

Date	Revision
10/27/95	Added Note Revised Quantities

HAIKU ACCESS ROAD

Scale: Horiz. 1" = 10'
Vert. 1" = 10'

SHEET NO. 9C18 OF 18 SHEETS

ORIGINAL PLAN | SURVEY PLOTTED BY | DRAWN BY | TRACED BY | DESIGNED BY | QUANTITIES BY | CHECKED BY | DATE | NOTE BOOK No. ____

CAD by J. Mimura, 55-52

Last Saved: J:\H3RF\U3\HOVM\XSEC11A.dwg 10/20/95 at 10:19

ADD.344

FED. ROAD DIST. NO.	STATE	FED. AID PROJ. NO.	FISCAL YEAR	SHEET NO.	TOTAL SHEETS
HAWAII	HAW.	I-H3-1(75), UNIT III	1994	ADD. 345	353

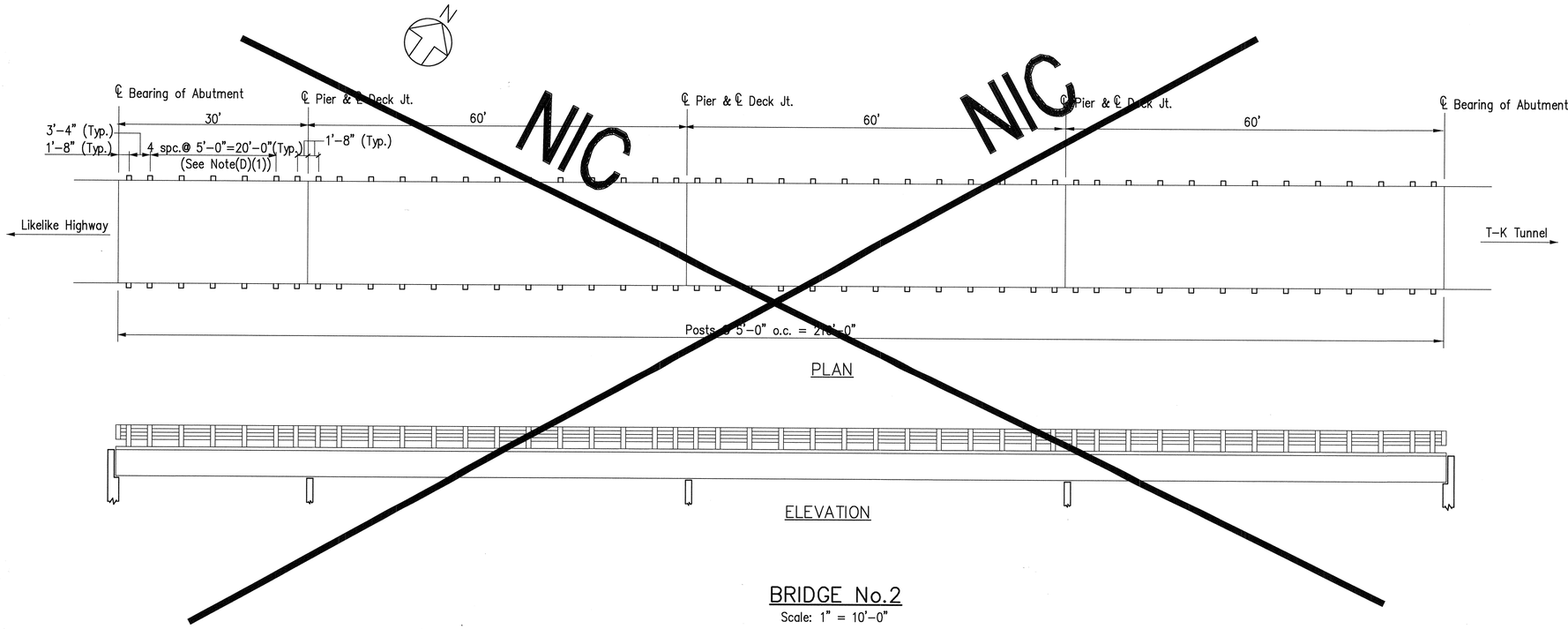

BRIDGE No.2

Scale: 1" = 10'-0"

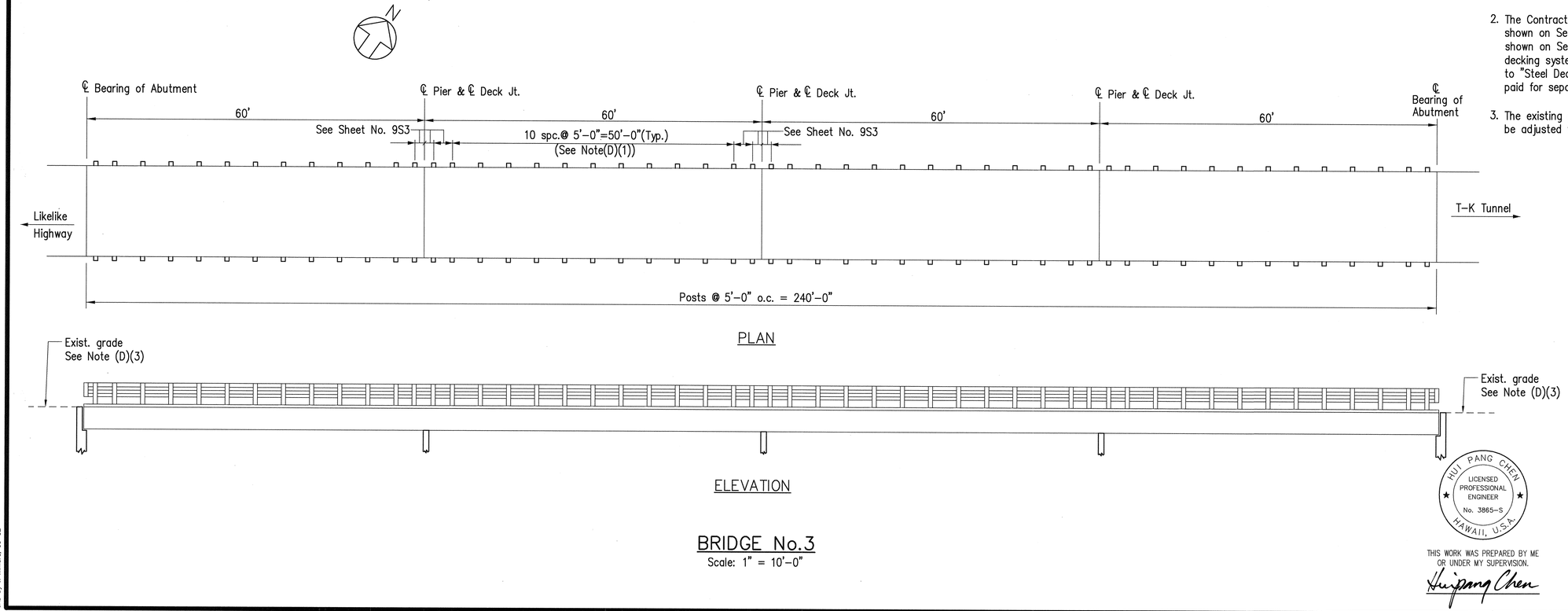

BRIDGE No.3

Scale: 1" = 10'-0"

GENERAL NOTES :

(A) SPECIFICATIONS

1. Standard Specifications for Highway Bridges (Fifteenth Edition 1992) American Association of State Highway and Transportation Officials and Interim Specifications.
2. Standard Specifications for Road and Bridge Construction State of Hawaii Department of Transportation with Special Provisions for this Project.
3. Tubular Guardrail meets Provisions of O.S.H.A. Requirements.

(B) LIVE LOAD

1. HS20-44 truck loading or 2 axles 4 feet apart with each axle weighing 24,000lbs.
2. Full impact.
3. Live load deflection with impact is limited 1/800 of the span.

(C) MATERIALS

1. ASTM A36(Fy=36ksi) Steel, Hot-dipped galvanized after fabrication.
2. ASTM A-325, Type 1 bolts and nuts for Deck system and ASTM- A-307 bolts for Metal Hand railings and other part. All bolts, nuts & washers shall be hot-dipped galvanized.
3. Steel floor deck plate shall be finished with raised checker board or equivalent skid resistant treatment.
4. Handrail post and railings shall be of steel tubing (ASTM A500, Grade A) hot-dipped galvanized after fabrication.

(D) CONSTRUCTION

1. The contractor shall verify the existing tie spacings prior to fabrication of deck system.
2. The Contractor shall remove and dispose of existing timber decking as shown on Section A Sheet No. 9S2 and replace with steel decking as shown on Section A Sheet No. 9S2. The removal and disposal of existing decking system as shown on Section A Sheet No. 9S2 shall be incidental to "Steel Deck System for Haiku Access Road Bridges" and will not be paid for separately.
3. The existing grade within 10' approaching to both ends of bridge shall be adjusted to a smooth approach.

STEEL DECK SYSTEM FOR HAIKU ACCESS ROAD

Bridge No. 3 = 252,000 lbs.

Date	Revision
10/13/95	Deleted Bridge No. 2. Revised note (D)(2), (C)(1), (C)(4), & steel quantity. Added Note (D)(3)

HUI PANG CHEN
LICENSED PROFESSIONAL ENGINEER
No. 3865-S
HAWAII, U.S.A.

THIS WORK WAS PREPARED BY ME OR UNDER MY SUPERVISION.

Huipang Chen

STATE OF HAWAII
DEPARTMENT OF TRANSPORTATION
HIGHWAYS DIVISION

HAIKU ACCESS ROAD RESTORATION

PLAN AND ELEVATION

HAIKU ACCESS ROAD

H-3 FINISH (UNIT III)
FAIP NO. I-H3-1(75), UNIT III
T.K. TUNNEL/ACCESS ROADS

SCALE: AS SHOWN DATE: JUNE 1995

SHEET NO. 9S1 OF 3 SHEETS

ADD.345

ORIGINAL PLAN
SURVEY PLOTTED BY
DRAWN BY
TRACED BY
DESIGNED BY
QUANTITIES BY
CHECKED BY
DATE
NOTE BOOK
No.

CAD by J. Mimura, 55-52

Last Saved: J:\H3RF\U3\HQVM\HAR-M20.dwg 10/09/95 at 14:49

FED. ROAD DIST. NO.	STATE	FED. AID PROJ. NO.	FISCAL YEAR	SHEET NO.	TOTAL SHEETS
HAWAII	HAW.	I-H3-1(75), UNIT III	1994	ADD. 346	353

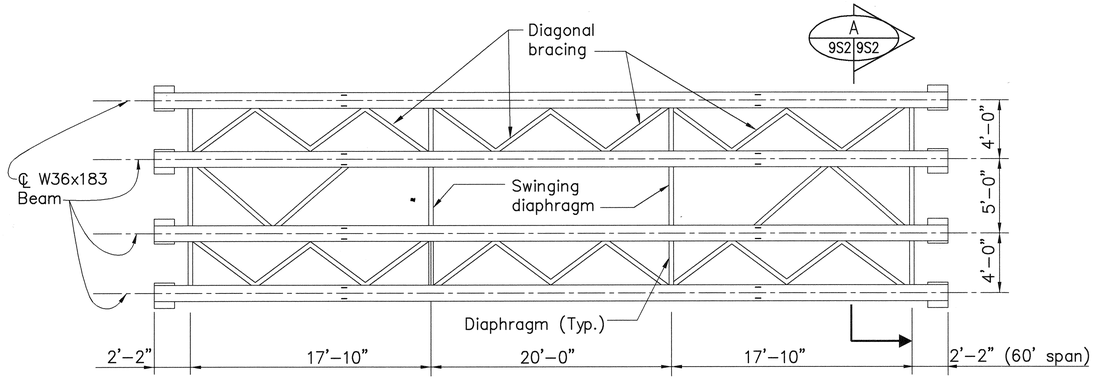

Note:
Deck not shown for clarity

PARTIAL EXISTING FRAMING PLAN
N.T.S.

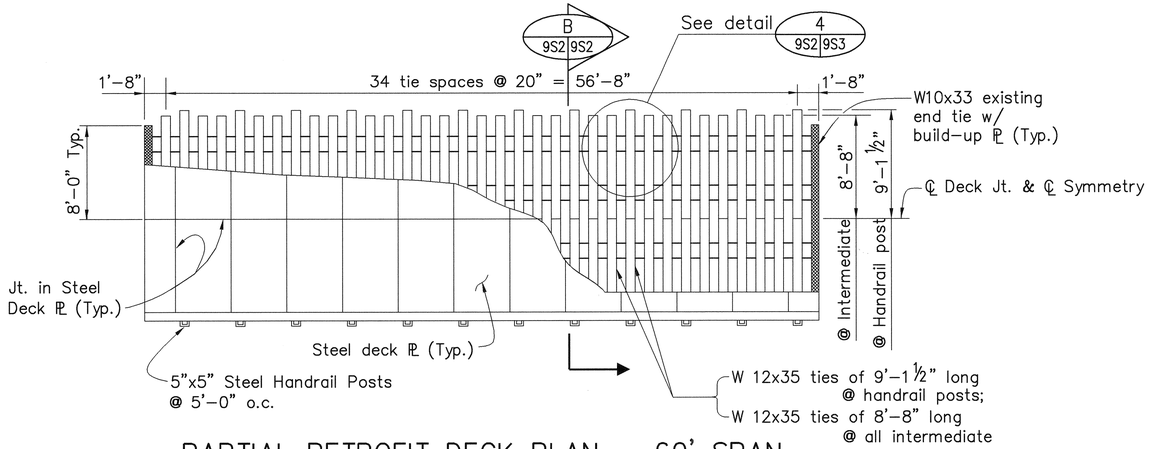

PARTIAL RETROFIT DECK PLAN – 60' SPAN
N.T.S.

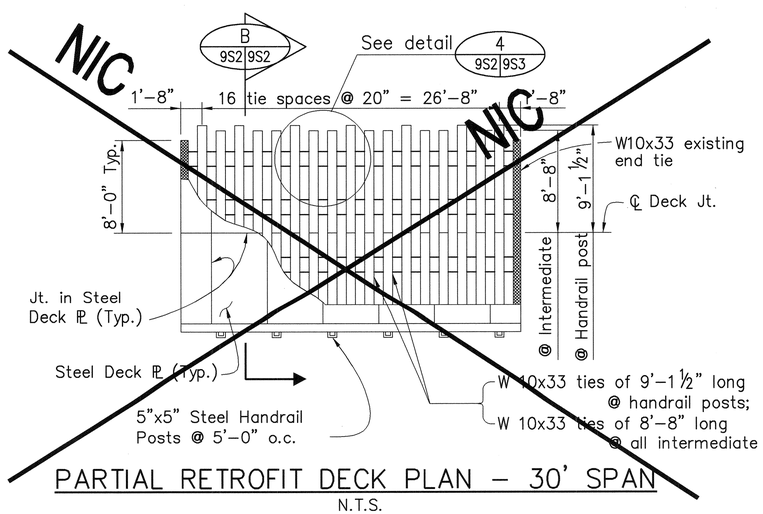

PARTIAL RETROFIT DECK PLAN – 30' SPAN
N.T.S.

LEGEND:
Denotes removal of existing structure.

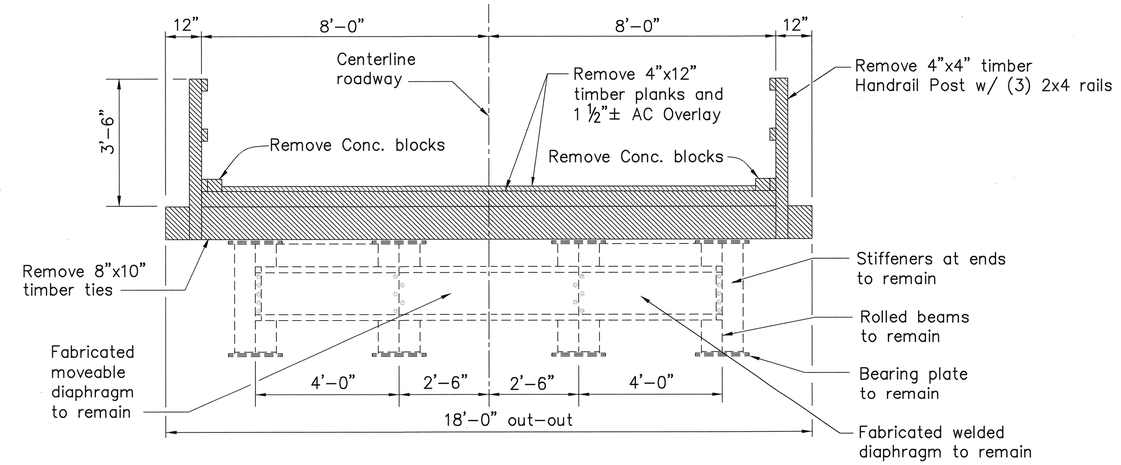

SECTION A
Scale: 1/2" = 1'-0"
9S2 9S2

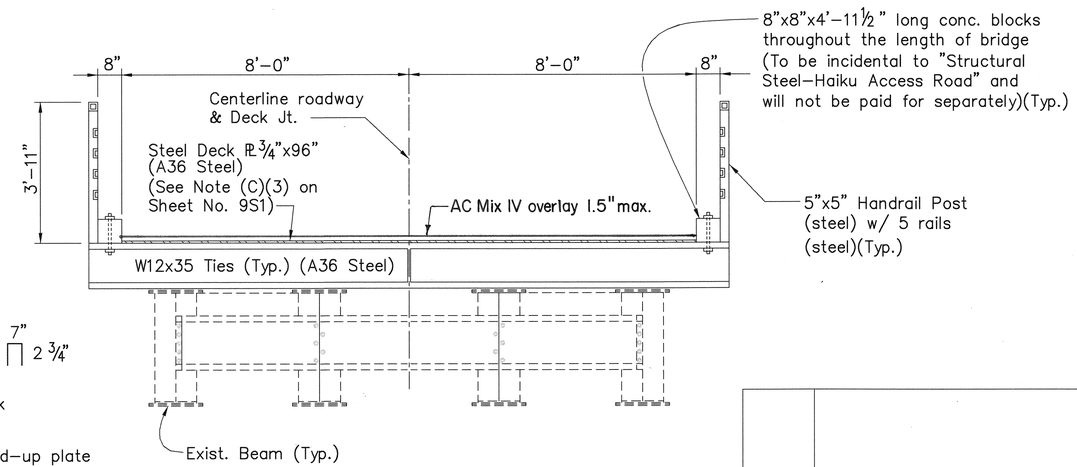

SECTION B
Scale: 1/2" = 1'-0"
9S2 9S2

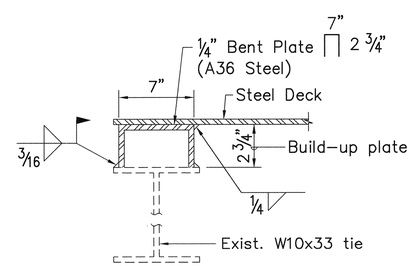

DETAIL 6
N.T.S.
9S3 9S2

Date	Revision
10/13/95	Deleted 30' Span Plan. Revised 60' Span Plan & Sections A/9S2 & B/9S2. Added Detail 6/9S2.

STATE OF HAWAII
DEPARTMENT OF TRANSPORTATION
HIGHWAYS DIVISION

HAIKU ACCESS ROAD RESTORATION

BRIDGE DETAILS - 1

HAIKU ACCESS ROAD

H-3 FINISH (UNIT III)
FAIP NO. I-H3-1(75), UNIT III
T.K. TUNNEL/ACCESS ROADS

SCALE: AS SHOWN DATE: JUNE 1995

HUI PANG CHEN
LICENSED PROFESSIONAL ENGINEER
No. 3865-S
HAWAII, U.S.A.

THIS WORK WAS PREPARED BY ME OR UNDER MY SUPERVISION.

Hui Pang Chen

SHEET NO. 9S2 OF 3 SHEETS

ADD.346

ORIGINAL PLAN
SURVEY PLOTTED BY
DRAWN BY
TRACED BY
DESIGNED BY
QUANTITIES BY
CHECKED BY
DATE
NOTE BOOK
No.

CAD by J. Mimura, 55-52

Last Saved: J:\H3RF\U3\HQVM\HAR-M15.dwg 10/09/95 at 08:03

FED. ROAD DIST. NO.	STATE	FED. AID PROJ. NO.	FISCAL YEAR	SHEET NO.	TOTAL SHEETS
HAWAII	HAW.	I-H3-1(75), UNIT III	1994	ADD. 347	353

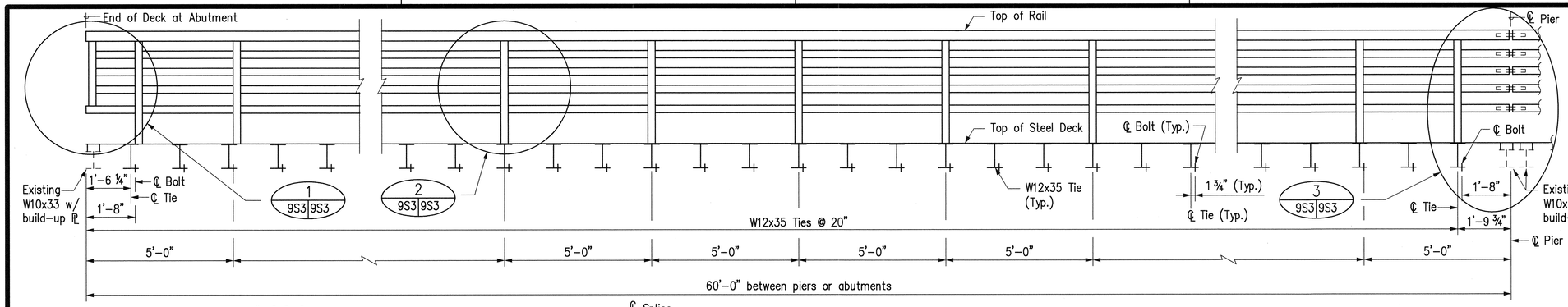

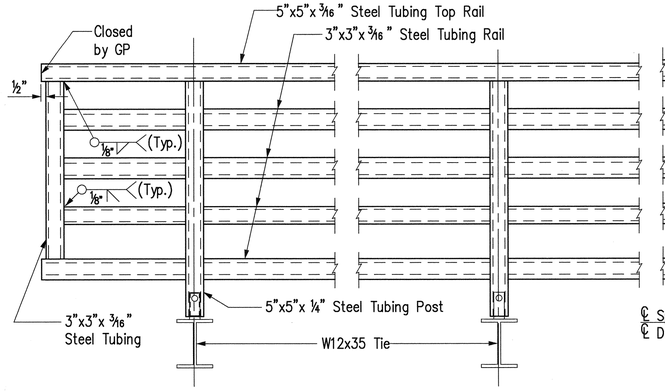

END POST (At Abutment)

DETAIL 1 (9S3 | 9S3)
Not To Scale

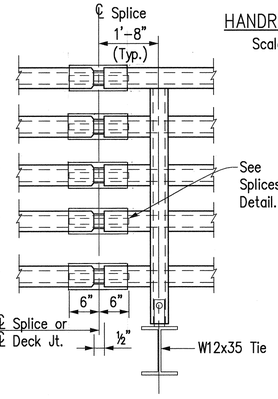

INTERIOR POST

DETAIL 2 (9S3 | 9S3)
Not To Scale

POST NEAR SPLICE OR DECK JT.

DETAIL 3 (9S3 | 9S3)
Not To Scale

HANDRAIL ELEVATION
Scale: ½" = 1'-0"

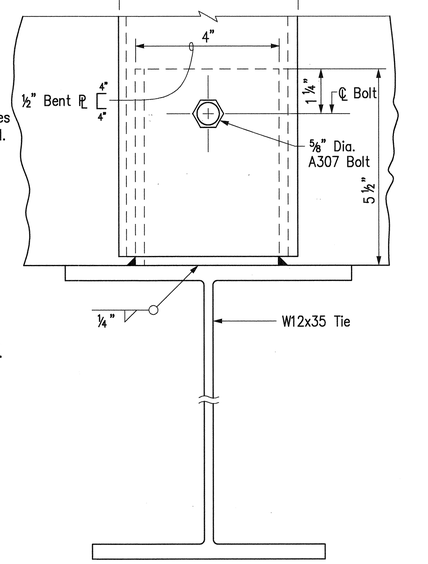

SECTION C (9S3 | 9S3)
Scale: ½" = 1"

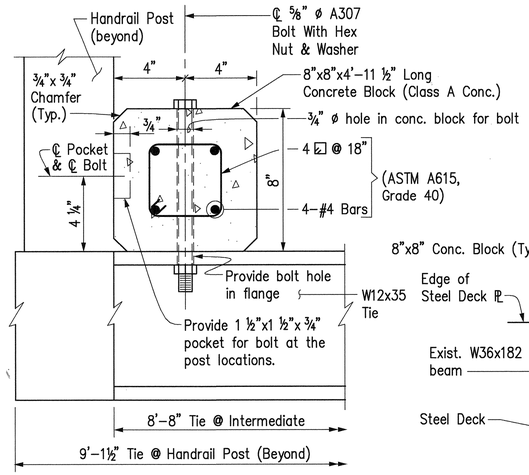

8"X8"X4'-11½" CONCRETE BLOCK (B | 9S3 | 9S3)
Scale: 3"=1'-0"

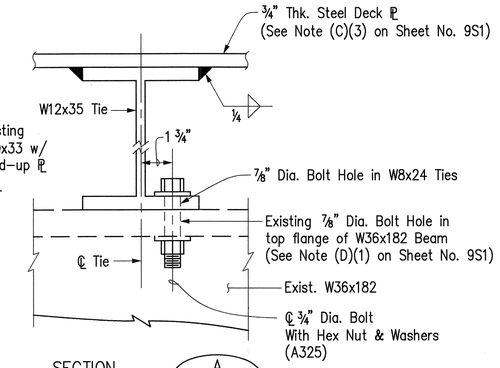

SECTION A (9S3 | 9S3)
Scale: 3" = 1'-0"

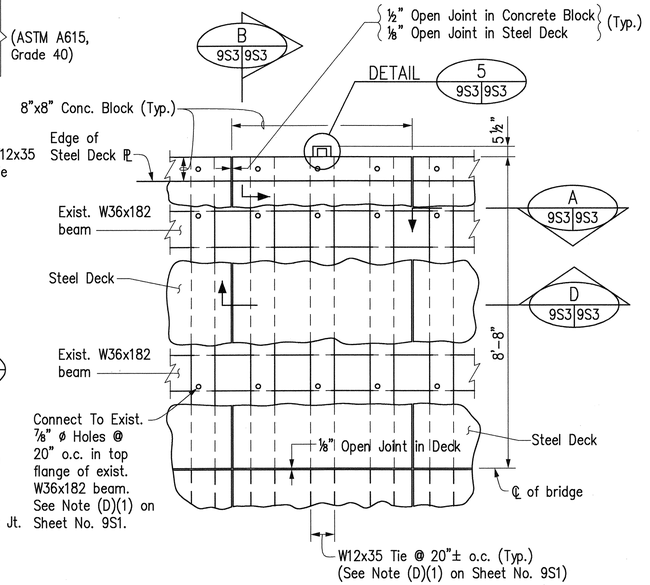

DECK DETAIL 4 (9S3 | 9S3)
Scale: ½" = 1'-0"

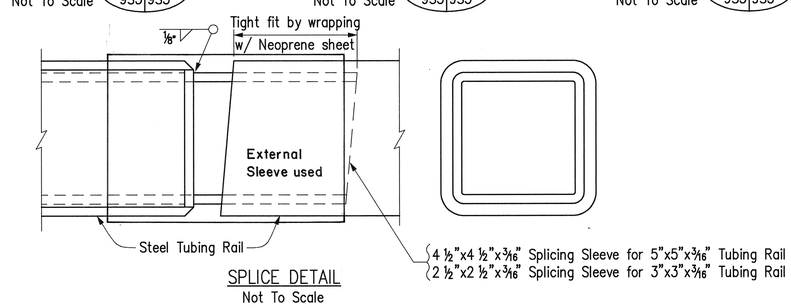

SPLICE DETAIL
Not To Scale

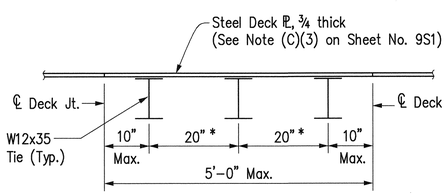

STEEL DECK PL @ INTERMEDIATE
Scale: ¾" = 1'-0"

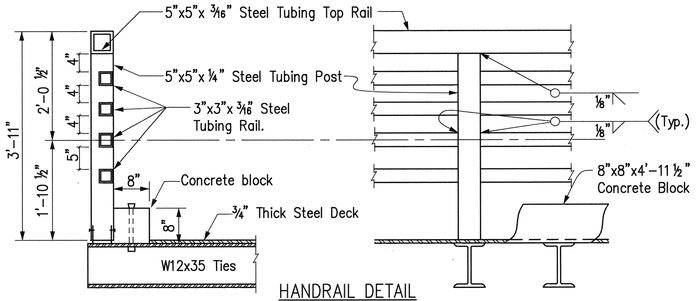

HANDRAIL DETAIL
Scale: ¾" = 1'-0"

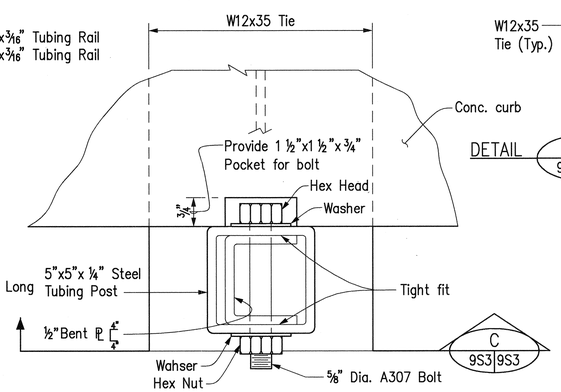

DETAIL 5 (9S3 | 9S3)
Not To Scale

DETAIL 6 (9S3 | 9S2)

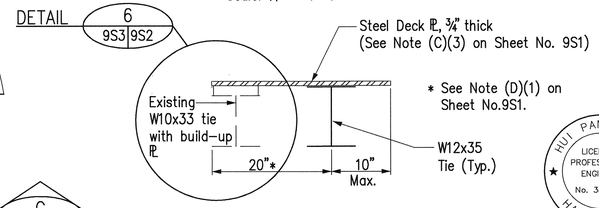

* See Note (D)(1) on Sheet No.9S1.

STEEL DECK PL @ PIER OR ABUTMENT DETAIL
Scale : 1" = 1'-0"

SECTION D (9S3 | 9S3)

HUI PANG CHEN
LICENSED PROFESSIONAL ENGINEER
No. 3865-S
HAWAII, U.S.A.

THIS WORK WAS PREPARED BY ME OR UNDER MY SUPERVISION.

Huipang Chen

Date	Revision
10/13/95	Revised Handrail Elevation, Handrail Detail, Details 1/9S3 thru 5/9S3, Sections A/9S3, B/9S3, C/9S3 & D/9S3.

STATE OF HAWAII
DEPARTMENT OF TRANSPORTATION
HIGHWAYS DIVISION

HAIKU ACCESS ROAD RESTORATION

BRIDGE DETAILS – 2

HAIKU ACCESS ROAD

H-3 FINISH (UNIT III)
FAIP NO. I-H3-1(75), UNIT III
T.K. TUNNEL/ACCESS ROADS

SCALE: AS SHOWN DATE: JUNE 1995

SHEET NO. 9S3 OF 3 SHEETS

ORIGINAL PLAN | SURVEY PLOTTED BY | DRAWN BY | TRACED BY | DESIGNED BY | QUANTITIES BY | CHECKED BY | DATE
NOTE BOOK No.

CAD by J. Mimura, 55-52

Last Saved: J:\H3RF\U3\DET\BR-DTL2.dwg 10/09/95 at 13:48

ADD.347