FED. ROAD DIST. NO.	STATE	FED. AID PROJ. NO.	FISCAL YEAR	SHEET NO.	TOTAL SHEETS
HAWAII	HAW.	I-H3-1(75) UNIT III	1994	17	353

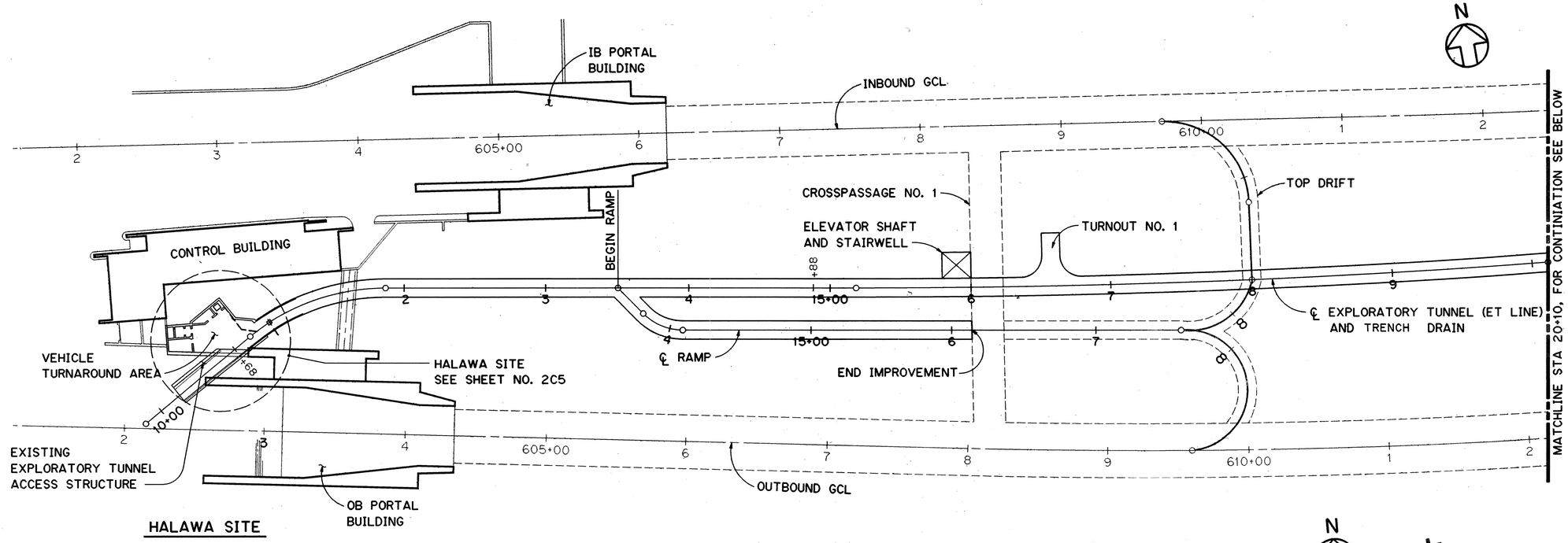

HALAWA SITE

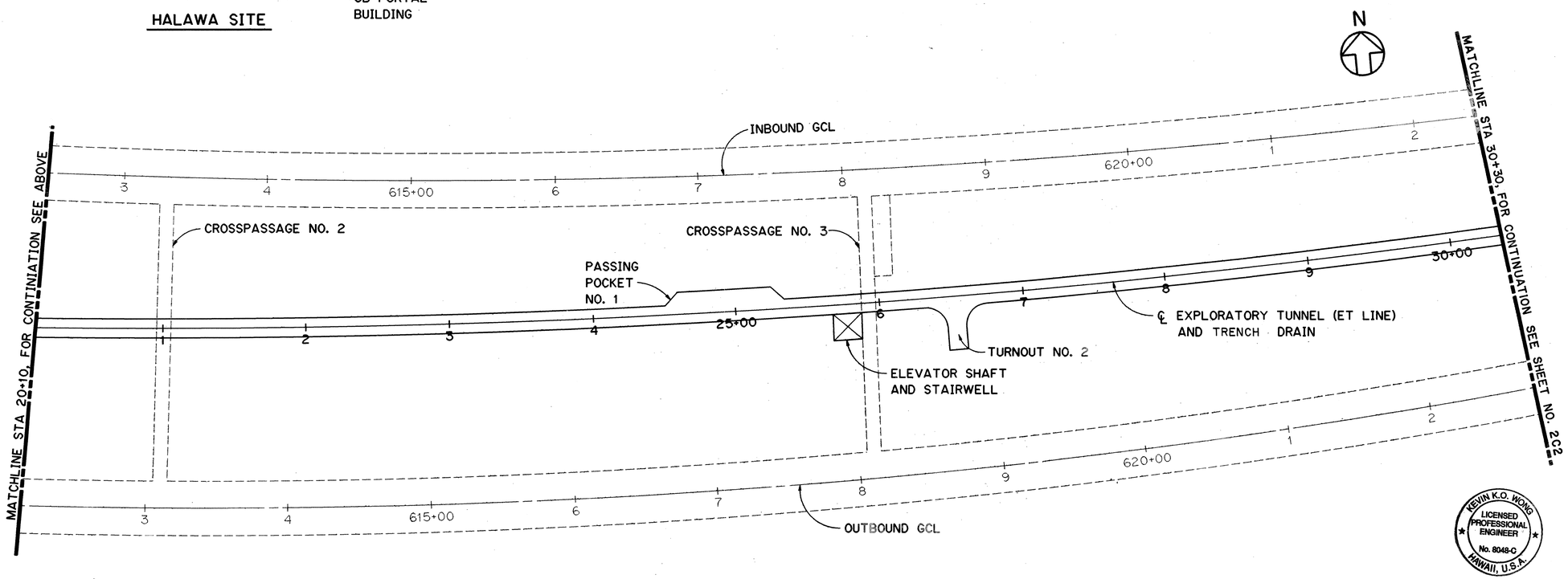

NOTES:

1. FOR CIVIL ABBREVIATIONS, SYMBOLS AND GENERAL NOTES SEE SHEET NO. 1G11.
2. FOR TYPICAL TUNNEL SECTION, SEE SHEET NO. 2C3.
3. FOR DETAILS SEE STRUCTURAL PLANS.
4. TUNNEL EXCAVATION, STA 10+68 TO 14+88 IS CONSIDERED "TYPE C", EXTREMELY WEATHERED BASALTIC ROCK. MATERIAL NOT ELIGIBLE FOR USE AS SELECT FILL.

9/3/96	DCN 75-007: CHANGED SLOTTED DRAIN TO TRENCH DRAIN
DATE	REVISION

STATE OF HAWAII
DEPARTMENT OF TRANSPORTATION
HIGHWAYS DIVISION

GENERAL PLAN - 1

EXPLORATORY TUNNEL IMPROVEMENTS
H-3 FINISH (UNIT III)
FAIP NO. I-H3-1(75), UNIT III
T.K. TUNNEL / ACCESS ROADS

SCALE: 1"=40'-0" DATE: JUN 1995

SHEET NO. 2C1 OF 15 SHEETS

17

KEVIN K.O. WONG
LICENSED PROFESSIONAL ENGINEER
No. 8048-C
HAWAII, U.S.A.

THIS WORK WAS PREPARED BY ME OR UNDER MY SUPERVISION.

GRAPHIC SCALE
40' 0' 40' 80'
1" = 40'

		DATE
SURVEY PLOTTED BY	B. VUONG	JAN 95
DRAWN BY		
TRACED BY		
DESIGNED BY	G. TE BOEKHORST	JAN 95
QUANTITIES BY		
CHECKED BY	D. MANITI	JAN 95

OR1931M4. PLAN
NOTE BOOK
NO.

AGUILAR 24T0:1DWG.CIVIL3CS4002.FGB71 31JAN95-16.31.10

FED. ROAD DIST. NO.	STATE	FED. AID PROJ. NO.	FISCAL YEAR	SHEET NO.	TOTAL SHEETS
HAWAII	HAW.	I-H3-1(75) UNIT III	1994	18	353

NOTE:

FOR NOTES, SEE SHEET NO. 2C1.

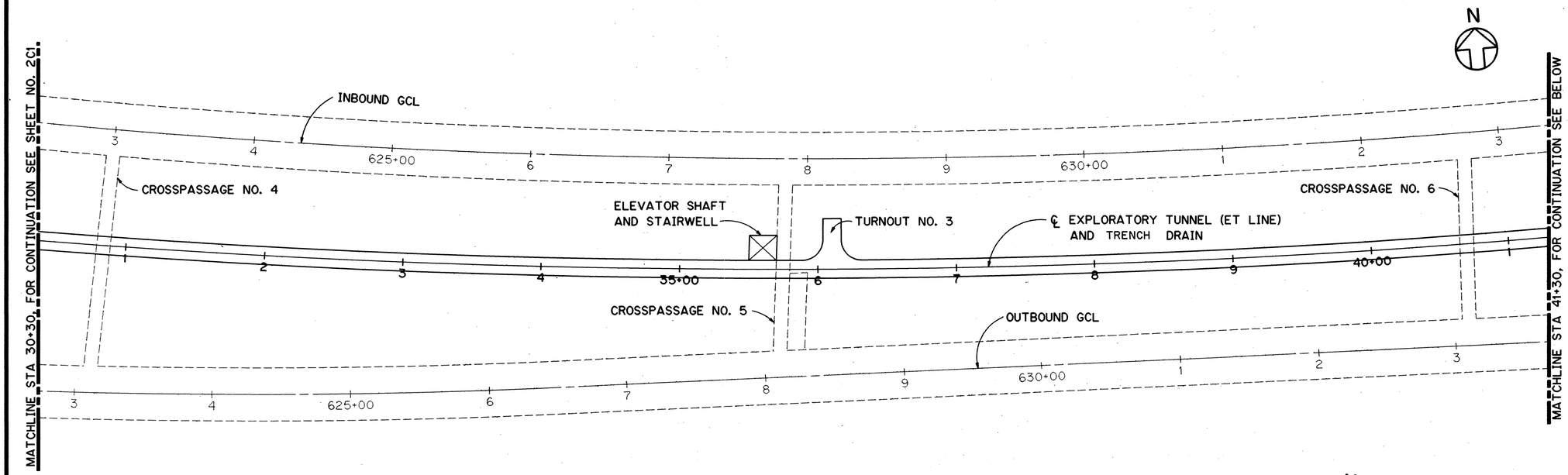

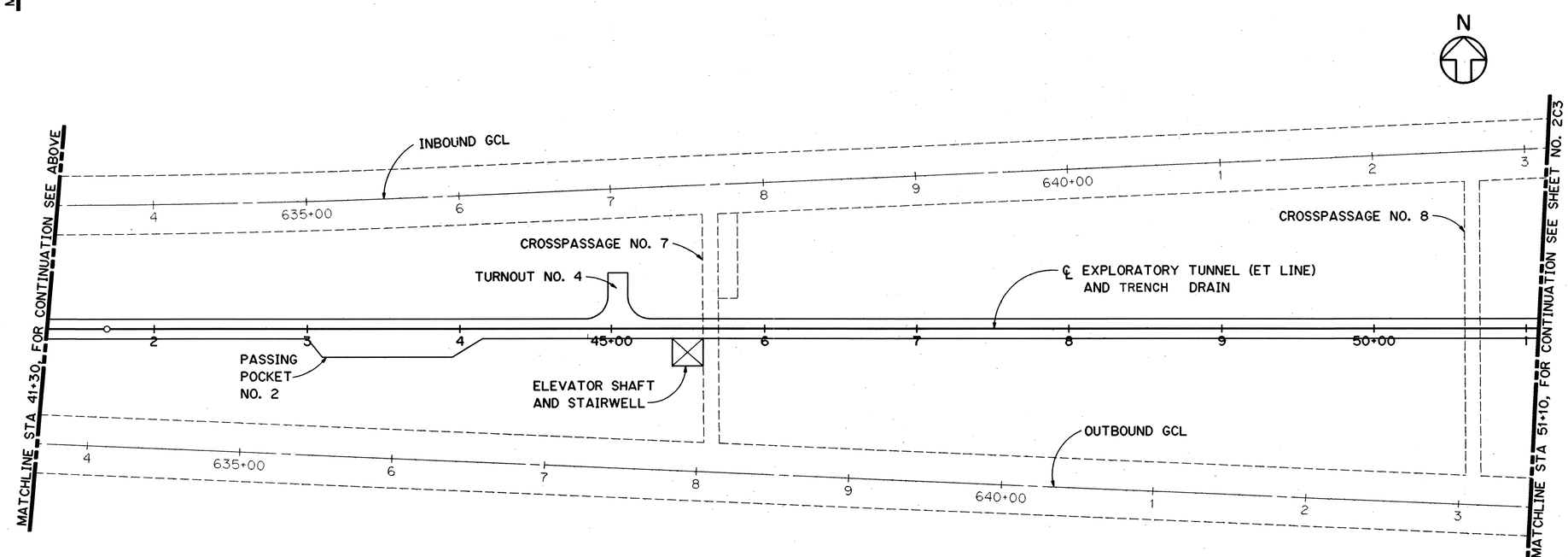

9/3/96	DCN 75-007: CHANGED SLOTTED DRAIN TO TRENCH DRAIN
DATE	REVISION

STATE OF HAWAII
DEPARTMENT OF TRANSPORTATION
HIGHWAYS DIVISION

GENERAL PLAN - 2

EXPLORATORY TUNNEL IMPROVEMENTS
H-3 FINISH (UNIT III)
FAIP NO. I-H3-1(75), UNIT III
T.K. TUNNEL / ACCESS ROADS

SCALE: 1"=40'-0" DATE: JUN 1995

SHEET NO. 2C2 OF 15 SHEETS

ORIGINAL PLAN		DATE
	SURVEY PLOTTED BY	
	DRAWN BY B. VUONG	JAN 95
NOTE BOOK	TRACED BY	
	DESIGNED BY G. TE BOEKHORST	JAN 95
NO.	QUANTITIES BY	
	CHECKED BY D. MANITT	JAN 95

GRAPHIC SCALE
40' 0' 40' 80'
1" = 40'

KEVIN K.O. WONG
LICENSED PROFESSIONAL ENGINEER
No. 8048-C
HAWAII, U.S.A.

THIS WORK WAS PREPARED BY ME OR UNDER MY SUPERVISION

AS BUILT

AGUILAR 2410:IDWG.CIVILJCS4003.FGB71 31JAN95-16.34.20

FED. ROAD DIST. NO.	STATE	FED. AID PROJ. NO.	FISCAL YEAR	SHEET NO.	TOTAL SHEETS
HAWAII	HAW.	I-H3-1(75) UNIT III	1994	19	353

NOTE:

FOR NOTES, SEE SHEET NO. 2C1.

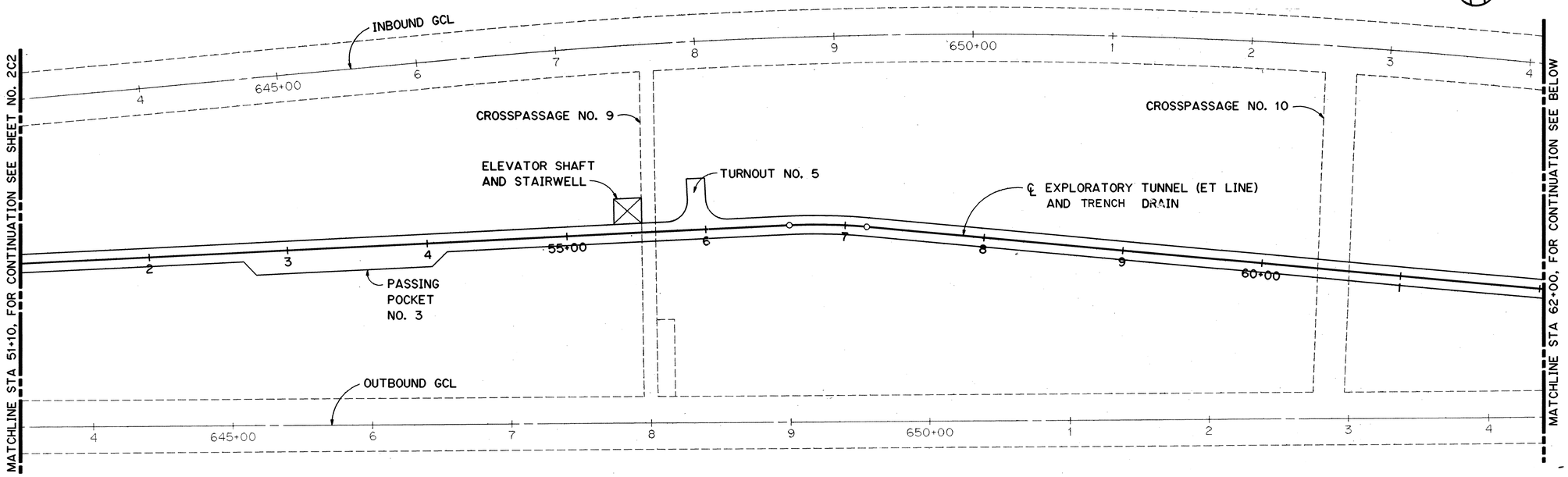

PLAN

SCALE: 1" = 40'

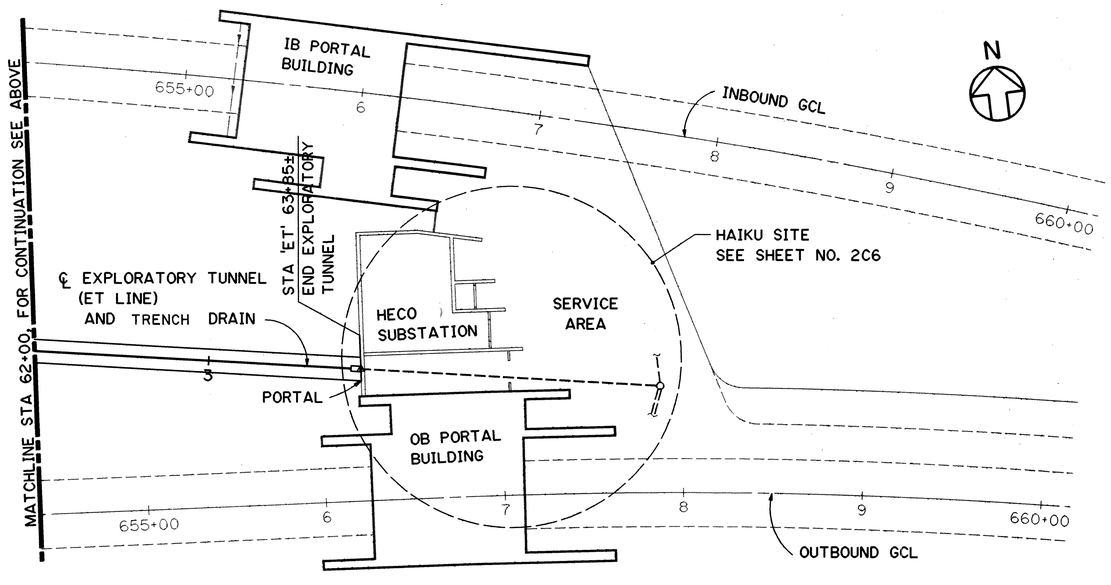

HAIKU SITE

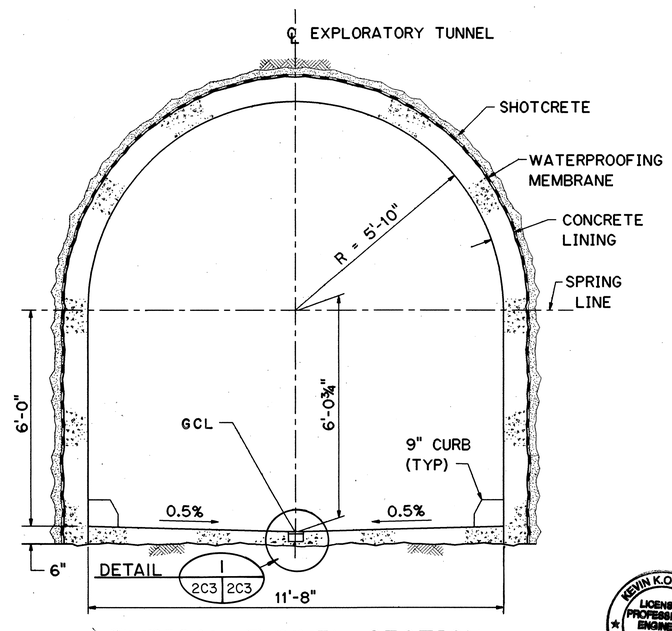

TYPICAL TUNNEL SECTION

SCALE: 1/2"=1'-0"

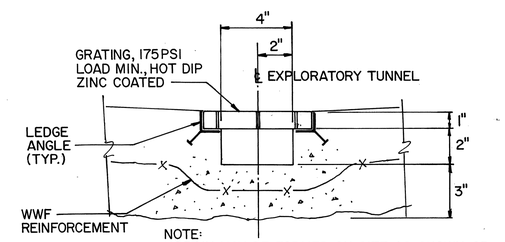

NOTE:
DRAIN MAY BE FORMED ON SITE AS SHOWN OR COMMERCIALLY AVAILABLE PREFORMED TRENCH DRAIN MODULES OF EQUAL CAPACITY MAY BE USED.

DETAIL 1 (2C3 | 2C3)
NO SCALE

DATE	REVISION
9/3/96	DCN 75-007: DELETED SLOTTED DRAIN, ADDED TRENCH DRAIN

STATE OF HAWAII
DEPARTMENT OF TRANSPORTATION
HIGHWAYS DIVISION

GENERAL PLAN - 3 AND TYPICAL SECTION

EXPLORATORY TUNNEL IMPROVEMENTS

H-3 FINISH (UNIT III)
FAIP NO. I-H3-1(75), UNIT III
T.K. TUNNEL / ACCESS ROADS

SCALE: AS NOTED DATE: JUN 1995

SHEET NO. 2C3 OF 15 SHEETS

KEVIN K.O. WONG
LICENSED PROFESSIONAL ENGINEER
No. 8048-C
HAWAII, U.S.A.

THIS WORK WAS PREPARED BY ME OR UNDER MY SUPERVISION

GRAPHIC SCALES
½" = 1'-0"
1" = 40'

		DATE
SURVEY PLOTTED BY		
DRAWN BY	B. VUONG	JAN. 95
TRACED BY		
DESIGNED BY	G. TE BOEKHORST	JAN. 95
QUANTITIES BY		
CHECKED BY	D. MANITI	JAN. 95

ORIGINAL PLAN
NOTE BOOK
NO.

AGUILAR 2410:(DWG.CIVIL)CS4004.FGB71 01FEB95-09.52.30

FED. ROAD DIST. NO.	STATE	FED. AID PROJ. NO.	FISCAL YEAR	SHEET NO.	TOTAL SHEETS
HAWAII	HAW.	I-H3-1(75) UNIT III	1994	20	353

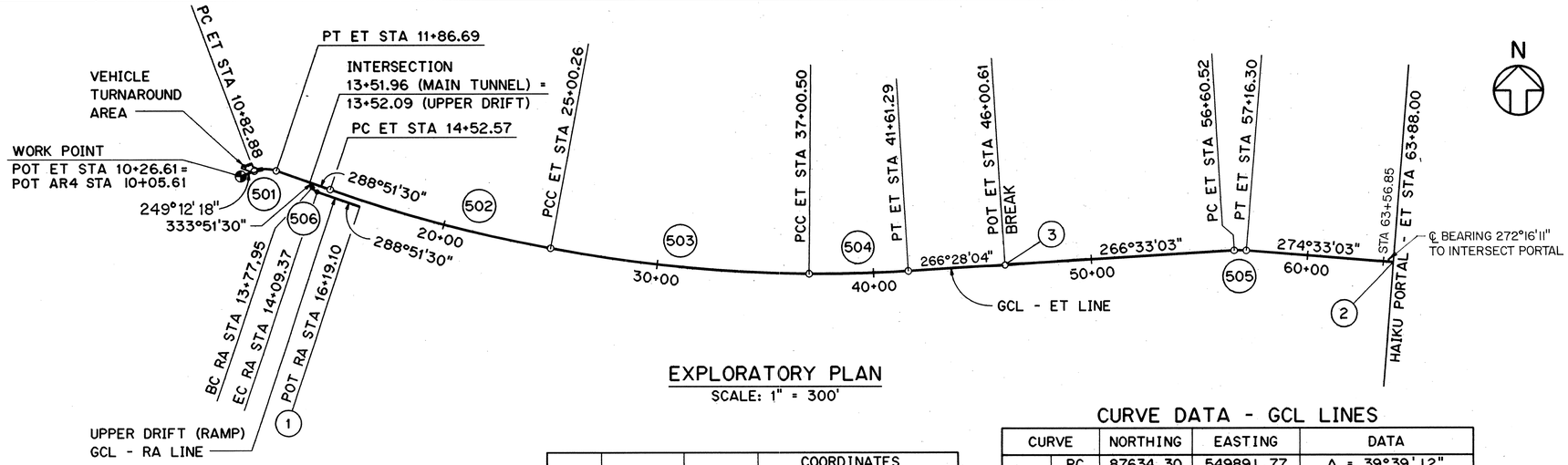

EXPLORATORY PLAN

SCALE: 1" = 300'

POINT	STATION	ELEV.	COORDINATES NORTHING	COORDINATES EASTING
WP	10+26.61	1004.46	87614.32	549839.16
1	16+19.10	-	87471.36	550382.74
2	63+88.00	-	87210.55	555130.96
3	46+00.61	-	87200.61	553347.66

CURVE DATA - GCL LINES

CURVE		NORTHING	EASTING	DATA
501	PC	87634.30	549891.77	Δ = 39°39'12"
	PT	87636.01	549993.50	R = 150.00'
	CC	87494.07	549945.02	LC = 103.81'
	PI	87653.50	549942.32	TAN.= 54.08'
502	PC	87550.07	550245.11	Δ = 8°58'45"
	PT	87277.41	551255.59	R = 6685.28'
	CC	93848.37	552486.63	LC = 1047.69'
	PI	87374.07	550739.65	TAN.= 524.92'

NOTE:

FOR NOTES, SEE SHEET NO. 2C1.

CURVE DATA - GCL LINES

CURVE		NORTHING	EASTING	DATA
503	PC	87277.41	551255.59	Δ = 10°06'38"
	PT	87161.36	552448.64	R = 6801.75'
	CC	93962.85	552508.08	LC = 1200.24'
	PI	87166.62	551846.98	TAN.= 601.68'
504	PC	87161.36	552448.64	Δ = 04°01'58"
	PT	87173.55	552909.17	R = 6546.46'
	CC	93707.57	552505.85	LC = 460.78'
	PI	87159.35	552679.12	TAN.= 230.49'
505	PC	87264.38	554405.65	Δ = 08°00'00"
	PT	87263.84	554461.38	R = 399.50"
	CC	86865.60	554429.68	LC = 55.78'
	PI	87266.06	554433.53	TAN.= 27.94'
506	PC	87559.38	550161.29	Δ = 45°00'00"
	PT	87539.15	550184.27	R = 40.00'
	CC	87577.01	550197.20	LC = 31.42'
	PI	87544.51	550168.59	TAN.= 16.57'

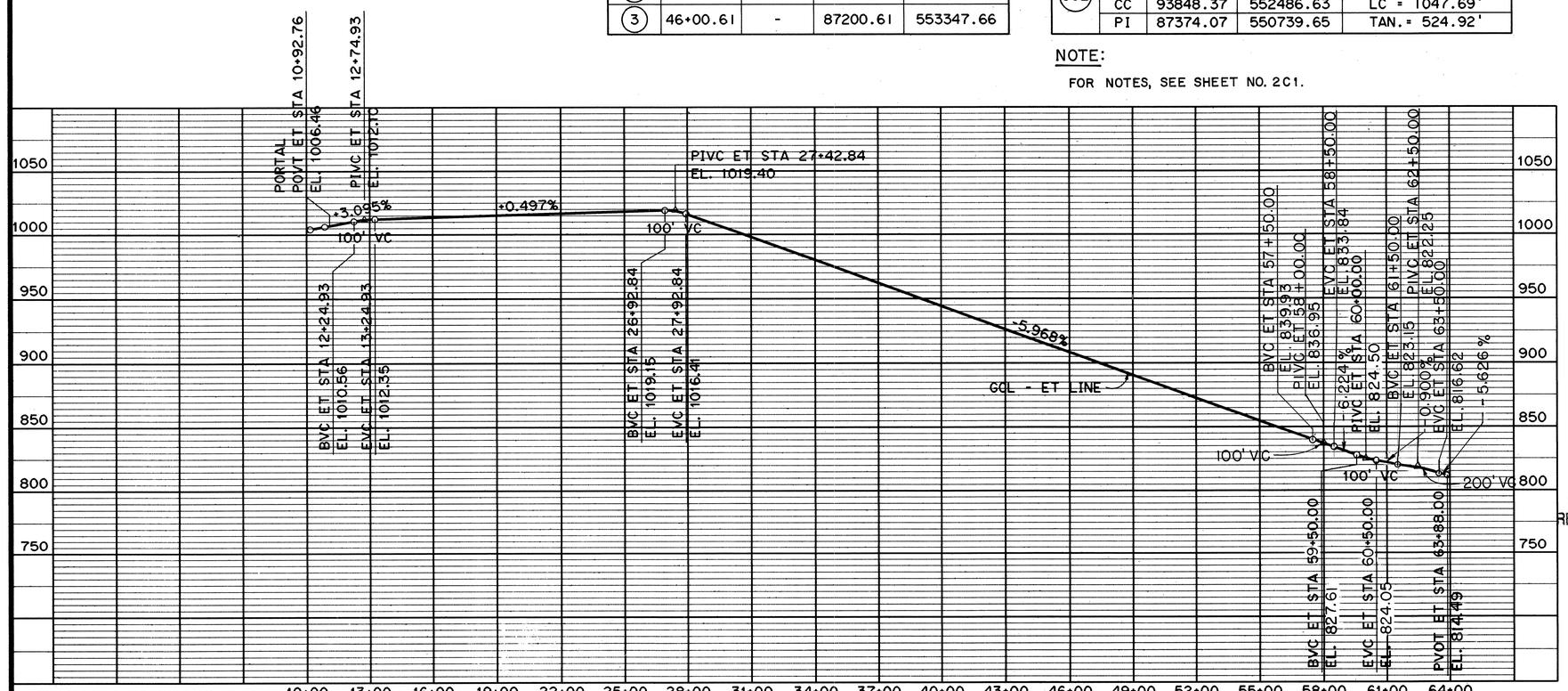

PROFILE - EXPLORATORY TUNNEL

SCALE: HORIZ. 1" = 300'
VERT. 1" = 50'

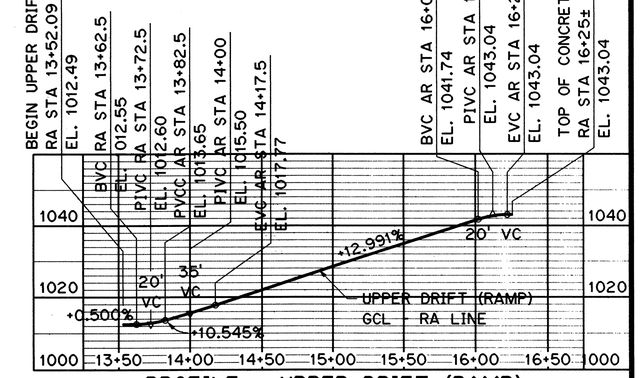

PROFILE - UPPER DRIFT (RAMP)

SCALE: HORIZ. 1" = 50'
VERT. 1" = 20'

FOR DETAIL AS-BUILT INFORMATION REFER TO CONSTRUCTION SUBMITTALS

DATE	REVISION
7/12/96	DCN 75-006: REVISED ET PROFILE FROM STA 57+50.00 TO STA 63+88.00
4/18/96	DCN 75-001: REVISED PER RESPONSES TO RFI NO. 4097-02 AND 4097-22.

KEVIN K.O. WONG
LICENSED PROFESSIONAL ENGINEER
No. 8048-C
HAWAII, U.S.A.

THIS WORK WAS PREPARED BY ME OR UNDER MY SUPERVISION

STATE OF HAWAII
DEPARTMENT OF TRANSPORTATION
HIGHWAYS DIVISION

ALIGNMENT PLAN AND PROFILE

EXPLORATORY TUNNEL IMPROVEMENTS

H-3 FINISH (UNIT III)
FAIP NO. I-H3-1(75), UNIT III
T.K. TUNNEL / ACCESS ROADS

SCALE: AS NOTED DATE: JUN 1995

SHEET NO. 2C4 OF 15 SHEETS

C.O.20

ORIGINAL PLAN		DATE
SURVEY PLOTTED BY	B. VUONG	JAN 95
DRAWN BY	" " "	
TRACED BY	" " "	
TRACEDWD BY	G. TE BOEKHORST	JAN 95
QUANTITIES BY	" " "	
CHECKED BY	D. MANITI	JAN 95
NOTE BOOK NO.		

GRAPHIC SCALES
20' 0' 20' 40' 1" = 20'
50' 0' 50' 100' 1" = 50'
300' 0' 300' 600' 1" = 300'

AGUILAR ELWOOD:12410:DWG.CIVILJCS4005.FGB;1 31JAN95-21.15.00

FED. ROAD DIST. NO.	STATE	FED. AID PROJ. NO.	FISCAL YEAR	SHEET NO.	TOTAL SHEETS
HAWAII	HAW.	I-H3-1(75) UNIT III	1994	21	353

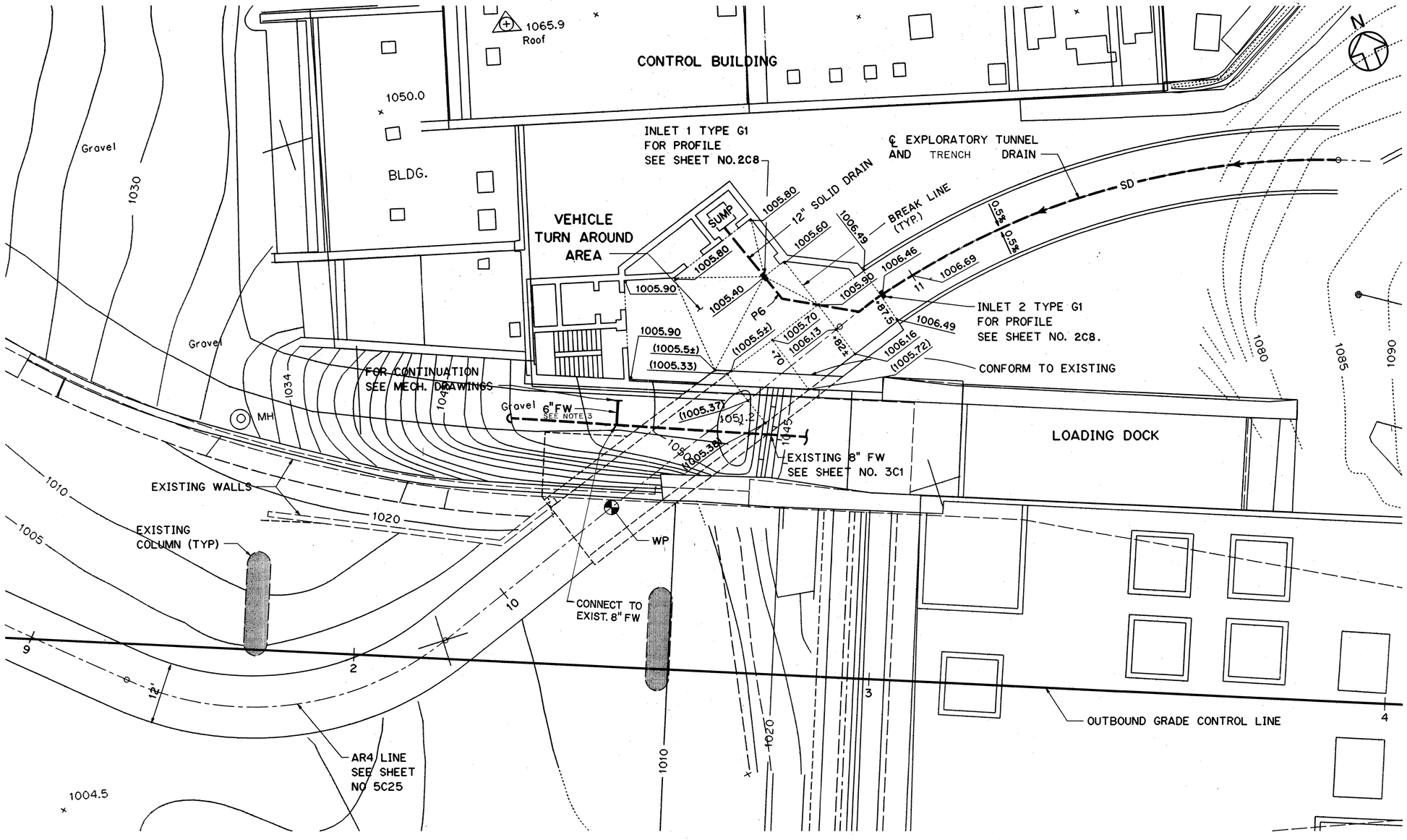

NOTES:

1. SEE NOTE 1 ON SHEET NO. 2C1.
2. THIS PLAN FOR TOP OF SLAB ELEVATIONS AND DRAINAGE IN VEHICLE TURN AROUND AREA AND 8" FW CONNECTION, AND EXISTING CONTOUR ELEVATIONS ALONG SERVICE ROAD.
3. INSTALL 2-32LB ANOTES, APPLY COATING AND BAND JOINTS. SURFACE MOUNT TEST BOX IN STAIR WELL NEXT TO WHERE FIRE WATER LINE DAY LIGHTS. WORK TO CONFORM TO DETAILS SHOWN ON SHEET NOS. 2C10, 2C11 AND 2C12. SPECIFICATION SECTION 647 APPLIES.

10/27/95	ADDENDUM 2-REVISED NOTE 2 AND
	ELEV. AT SW CORNER OF CONTROL BLDG.
DATE	REVISION

STATE OF HAWAII
DEPARTMENT OF TRANSPORTATION
HIGHWAYS DIVISION

HALAWA SITE PLAN

EXPLORATORY TUNNEL IMPROVEMENTS
H-3 FINISH (UNIT III)
FAIP NO. I-H3-1(75), UNIT III
T.K. TUNNEL / ACCESS ROADS

SCALE: 1"=10'-0" DATE: JUN 1995

SHEET NO. 2C5 OF 15 SHEETS

KEVIN K.O. WONG
LICENSED PROFESSIONAL ENGINEER
No. 8048-C
HAWAII, U.S.A.

THIS WORK WAS PREPARED BY ME OR UNDER MY SUPERVISION

GRAPHIC SCALE
10' 0' 10' 20'
1" = 10'

		DATE
ORIGINAL PLAN	SURVEY PLOTTED BY	
	DRAWN BY	B. VUONG
NOTE BOOK	TRACED BY	" JAN 95
	DESIGNED BY	G. TE BOEKHORST JAN 95
NO.	QUANTITIES BY	" JAN 95
	CHECKED BY	D. MANITI " JAN 95

AGUILAR ELWOOD::2410:[DWG.CIVIL]CS4060.FGB;1 31JAN95-21.16.20

ADD. 21

FED. ROAD DIST. NO.	STATE	FED. AID PROJ. NO.	FISCAL YEAR	SHEET NO.	TOTAL SHEETS
HAWAII	HAW.	I-H3-1(75) UNIT III	1994	22	353

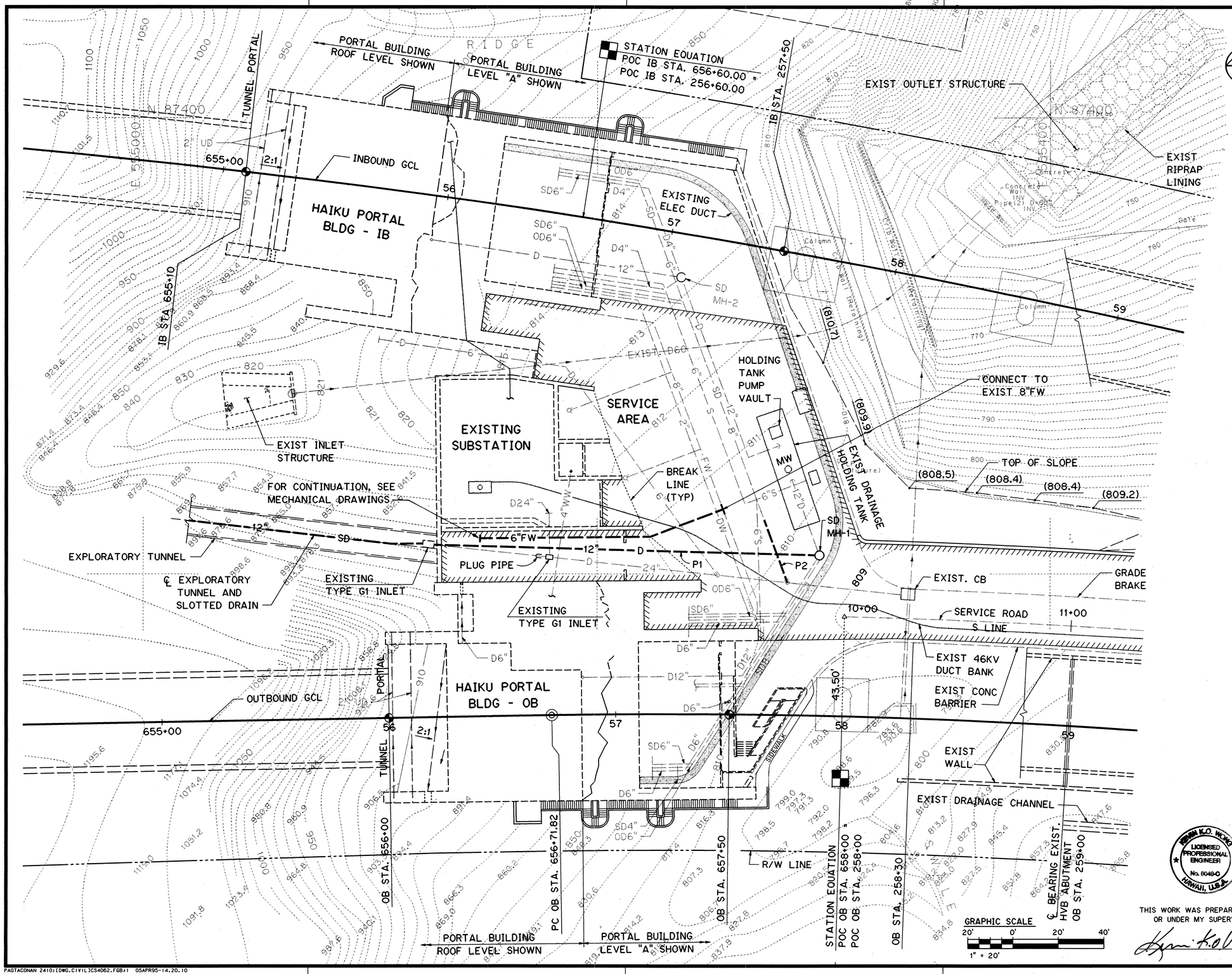

NOTES:

1. SEE NOTE 1 ON SHEET NO. 2C1
2. FOR TYPICAL PAVEMENT SECTIONS, SEE SHEET NO. 6C8.
3. FOR GRADING INFORMATIONS, SEE SHEET NO. 6C5.
4. FOR CATHODIC PROTECTION, SEE SHEET NO. 2C9.
5. THIS PLAN FOR DRAINAGE AND FIRE WATER CONNECTIONS FOR EXPLORATORY TUNNEL ONLY. SEE SHEET NO. 6C5 FOR GRADING AND DRAINAGE INFORMATION FOR SERVICE AREA.
6. FOR DRAINAGE PROFILES P1 & P2, SEE SHEET NO. 2C8.

STORM DRAIN DATA

SD MH-1 - TYPE F
OB STA. 657+97.50-41' LT
RIM EL. 809.67
INV. EL. 805.42 (12")
INV. EL. 807.00 (6")

ORIGINAL PLAN			
NOTE BOOK	SURVEY PLOTTED BY	B. VUONG	JAN 95
	DRAWN BY	"	"
	TRACED BY	"	"
	DESIGNED BY	G. TE BOEKHORST	JAN 95
	QUANTITIES BY	"	"
NO.	CHECKED BY	D. MANITI	JAN 95

DATE	REVISION

STATE OF HAWAII
DEPARTMENT OF TRANSPORTATION
HIGHWAYS DIVISION

HAIKU SITE PLAN

EXPLORATORY TUNNEL IMPROVEMENTS
H-3 FINISH (UNIT III)
FAIP NO. I-H3-1(75), UNIT III
T.K. TUNNEL / ACCESS ROADS

SCALE: 1"=20.0' DATE: JUN. 1995

HERMAN K.O. WONG LICENSED PROFESSIONAL ENGINEER No. 8048-O HAWAII, U.S.A.

THIS WORK WAS PREPARED BY ME OR UNDER MY SUPERVISION

SHEET NO. 2C6 OF 15 SHEETS

PAGTACONAN 2410:[DWG.CIVIL]CS4062.FGB;1 05APR95-14.20.10

FED. ROAD DIST. NO.	STATE	FED. AID PROJ. NO.	FISCAL YEAR	SHEET NO.	TOTAL SHEETS
HAWAII	HAW.	I-H3-1(75) UNIT III	1994	23	353

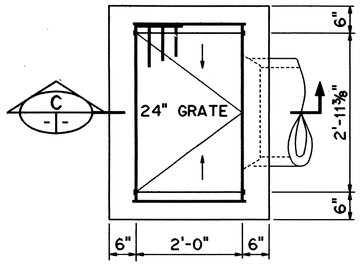

PLAN

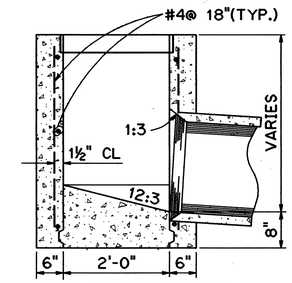

BOTTOMS NOT REINFORCED

SECTION C

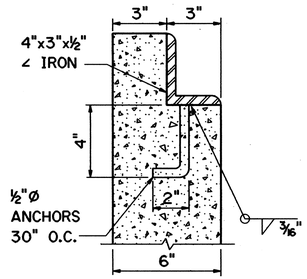

SECTION B

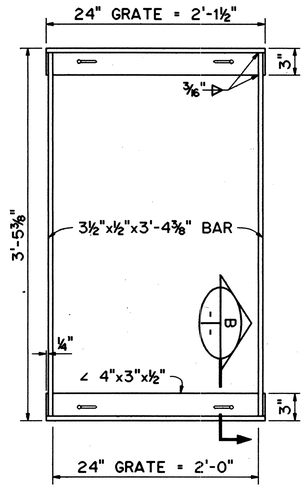

TYPICAL FRAME

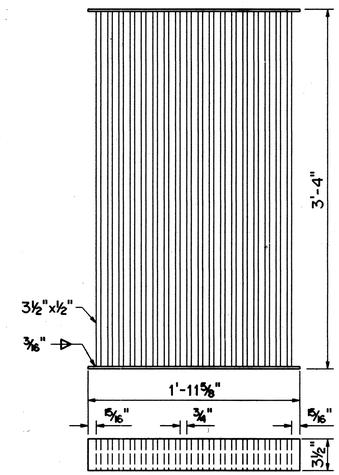

WELDED GRATE

TYPE G1 DRAINAGE INLET

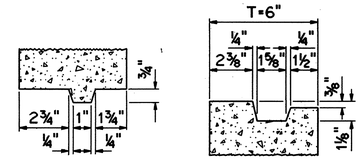

JOINT DETAIL

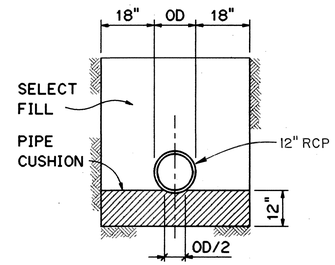

TYPICAL TRENCH SECTION

NOTES:

1. CONSTRUCT RUNGS AS REQUIRED, SEE STANDARD PLAN.
2. BASIN FLOOR SHALL HAVE WOOD TROWEL FINISH AND A MINIMUM SLOPE OF 12:3 FROM ALL DIRECTIONS TOWARD OUTLET PIPE.

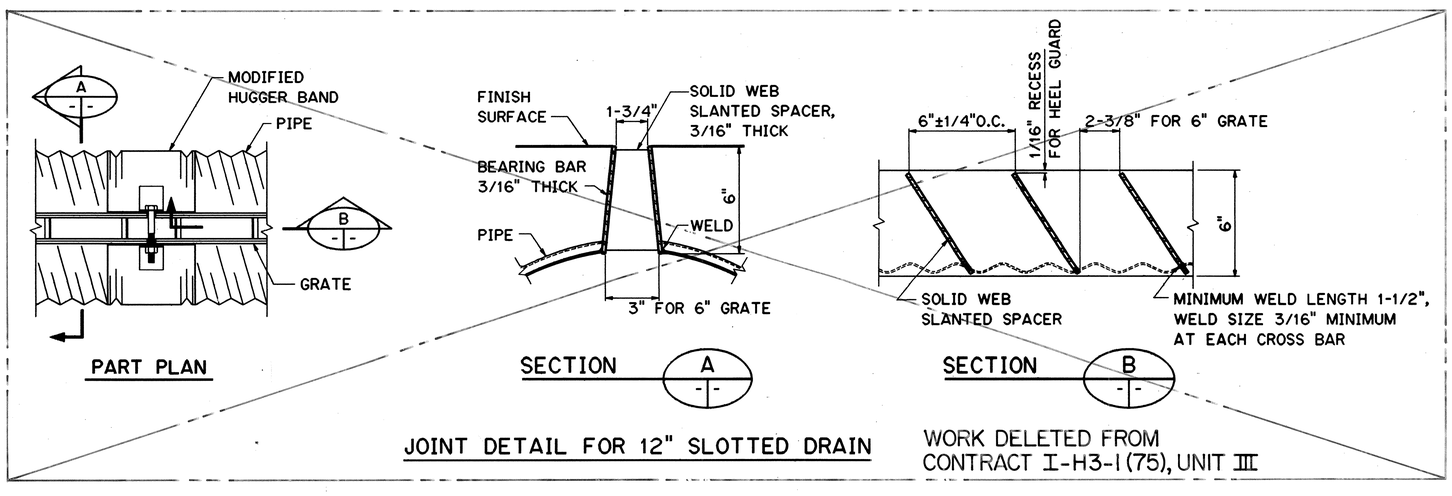

PART PLAN

SECTION A

SECTION B

JOINT DETAIL FOR 12" SLOTTED DRAIN

WORK DELETED FROM
CONTRACT I-H3-1(75), UNIT III

ORIGINAL PLAN		DATE
	SURVEY PLOTTED BY	
	DRAWN BY B. YUONG	JAN 95
NOTE BOOK	TRACED BY	
	DESIGNED BY G. TE BOEKHORST	JAN 95
NO.	QUANTITIES BY	
	CHECKED BY D. MANITI	JAN 95

KEVIN K.O. WONG
LICENSED PROFESSIONAL ENGINEER
No. 8048-C
HAWAII, U.S.A.

THIS WORK WAS PREPARED BY ME OR UNDER MY SUPERVISION

DATE	REVISION

STATE OF HAWAII
DEPARTMENT OF TRANSPORTATION
HIGHWAYS DIVISION

MISCELLANEOUS DETAILS

EXPLORATORY TUNNEL IMPROVEMENTS
H-3 FINISH (UNIT III)
FAIP NO. I-H3-1(75), UNIT III
T.K. TUNNEL / ACCESS ROADS

SCALE: NTS DATE: JUN 1995

SHEET NO. 2C7 OF 15 SHEETS

CARZON ELWOOD::2410:[DWG.CIVIL]CS4067.FGB;1 01FEB95-13.51.00

FED. ROAD DIST. NO.	STATE	FED. AID PROJ. NO.	FISCAL YEAR	SHEET NO.	TOTAL SHEETS
HAWAII	HAW.	I-H3-1(75) UNIT III	1994	24	353

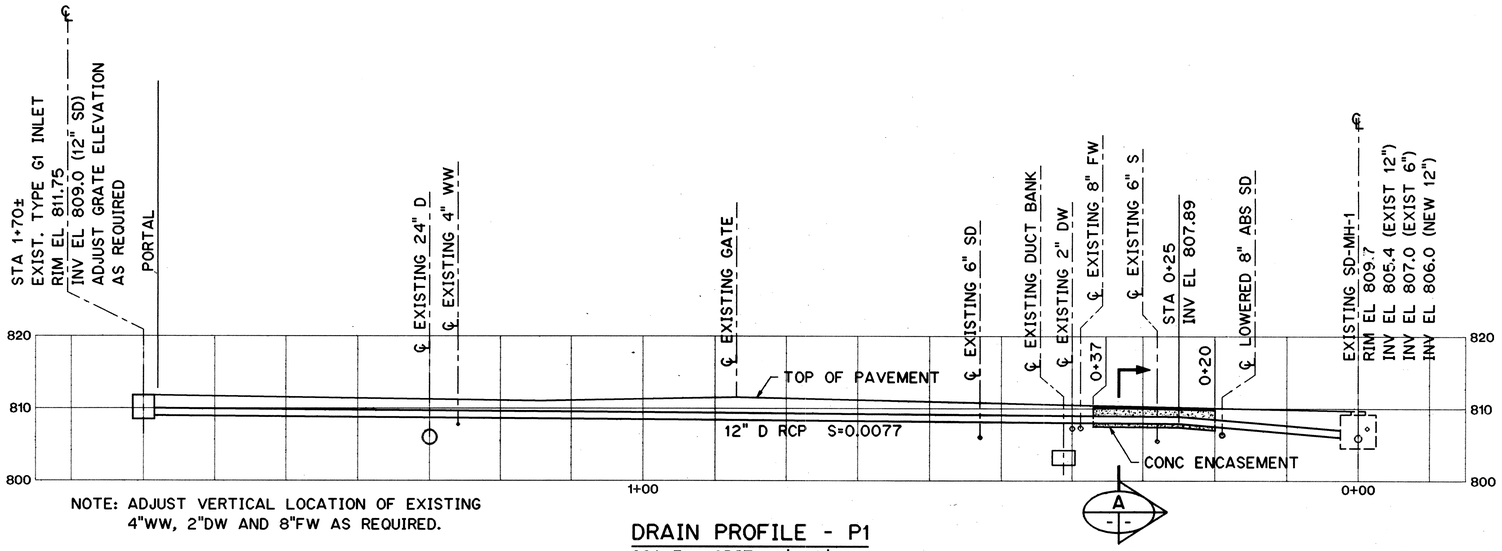

NOTE: ADJUST VERTICAL LOCATION OF EXISTING 4"WW, 2"DW AND 8"FW AS REQUIRED.

DRAIN PROFILE - P1

SCALE: HORIZ. 1"=10'
VERT. 1"=10'

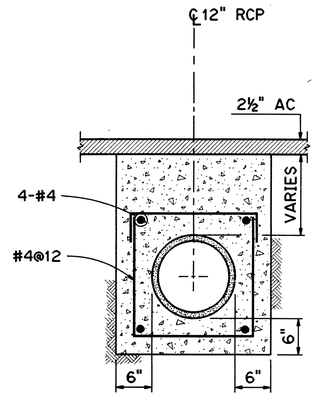

CONCRETE ENCASEMENT

SECTION A
NTS

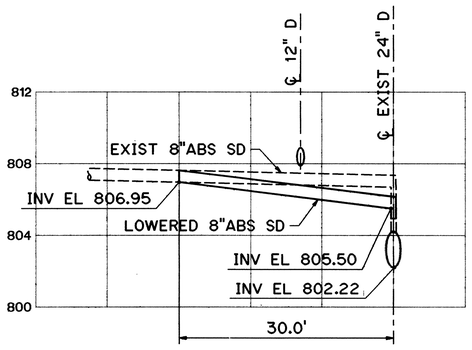

DRAIN PROFILE - P2

SCALE: HORIZ. 1"=10'
VERT. 1"=4'

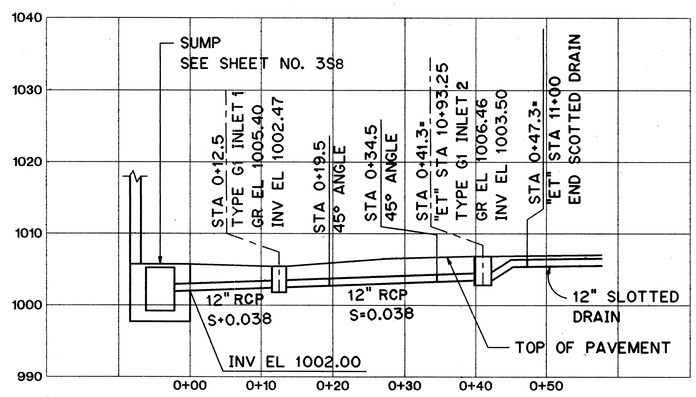

DRAIN PROFILE - P6

SCALE: HORIZ. 1"=10'
VERT. 1"=10'

NOTE:

SEE NOTE 1 ON SHEET NO. 2C1.

DATE	REVISION
10/27/95	ADDENDUM 2 - CHANGED SUMP REF. SHT. NO. FROM 3S9 TO 3S8 IN PROFILE P6

STATE OF HAWAII
DEPARTMENT OF TRANSPORTATION
HIGHWAYS DIVISION

DRAINAGE PROFILES

EXPLORATORY TUNNEL IMPROVEMENTS
H-3 FINISH (UNIT III)
FAIP NO. I-H3-1(75), UNIT III
T.K. TUNNEL / ACCESS ROADS

SCALE: AS NOTED DATE: JUN 1995

SHEET NO. 2C8 OF 15 SHEETS

KEVIN K.O. WONG
LICENSED PROFESSIONAL ENGINEER
No. 8048-C
HAWAII, U.S.A.

THIS WORK WAS PREPARED BY ME OR UNDER MY SUPERVISION

GRAPHIC SCALES
4' 2' 0' 4' 8'
¼" = 1'-0"
10' 0' 10' 20'
1" = 10'

ORIGINAL PLAN		DATE
	SURVEY PLOTTED BY	
	DRAWN BY B. VUONG	JAN 95
	TRACED BY	
NOTE BOOK	DESIGNED BY G. TE BOEKHORST	JAN 95
	QUANTITIES BY	
NO.	CHECKED BY D. MANITT	JAN 95

AGUILAR 2410:[DWG.CIVIL]CS4068.FGB;1 01FEB95-11.07.00

ADD.24

FED. ROAD DIST. NO.	STATE	FED. AID PROJ. NO.	FISCAL YEAR	SHEET NO.	TOTAL SHEETS
HAWAII	HAW.	I-H3-1(75) UNIT III	1994	25	353

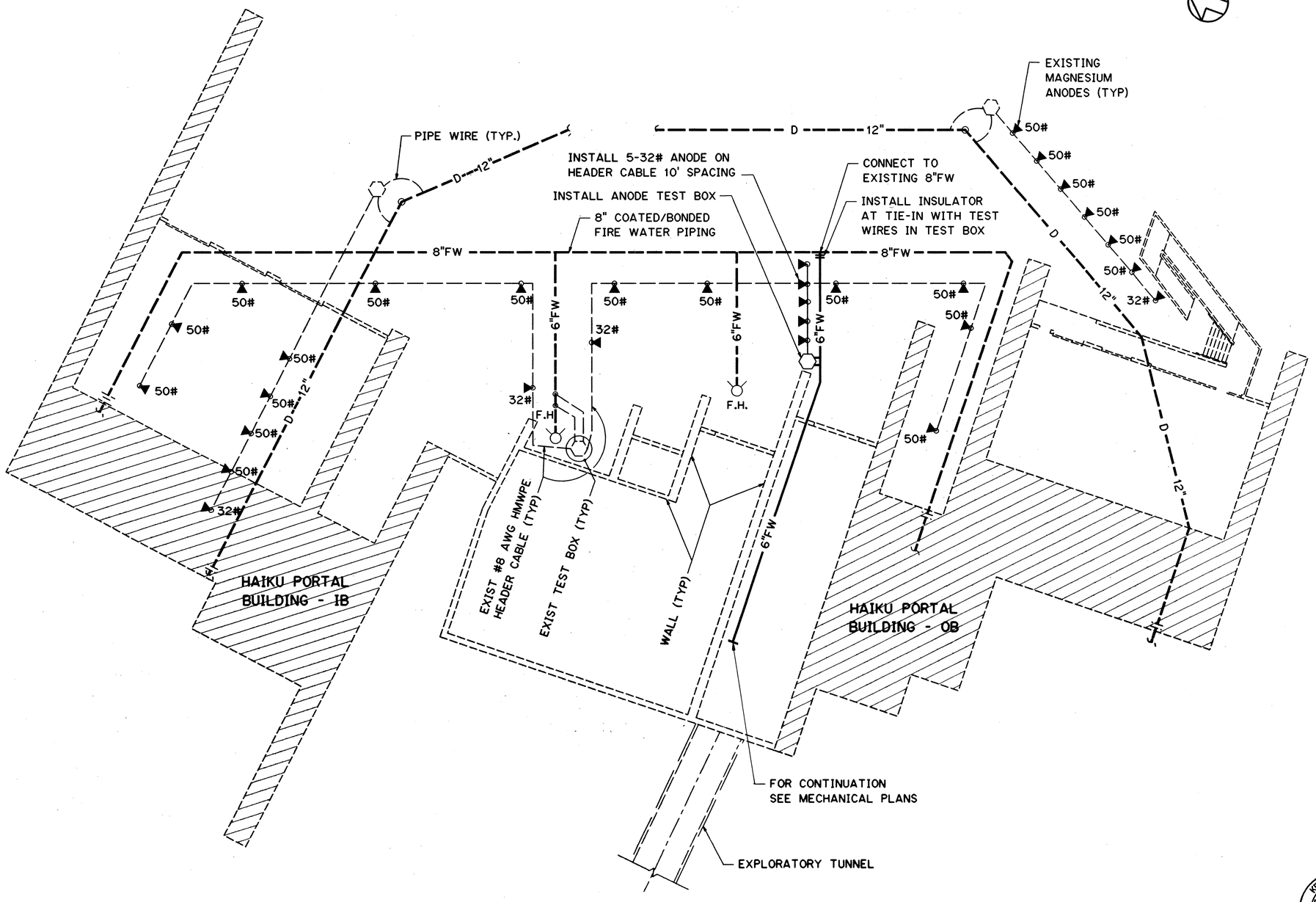

CATHODIC PROTECTION FOR SERVICE AREA FIRE WATER LINE

GENERAL NOTES:

1. LOCATE MAGNESIUM ANODE 6 INCHES FROM THE FIRE WATER LINE FOR LOCATIONS SHOWN.
2. THE LAYOUT DIMENSIONS SHOWN ARE FOR GUIDANCE ONLY. WITH THE CONSENT OF THE ENGINEER, THE CONTRACTOR MAY VARY THEM AS NEEDED TO AVOID CONFLICTS WITH OTHER UTILITIES.
3. THE CONTRACTOR TO HAND DIG AROUND PIPING AT TIE-INS TO ADVOID DAMAGE TO EXISTING CORROSION CONTROL WIRING, ANODES AND PIPE COATINGS.
4. THE EXISTING TIE-IN PIPING IS CONCRETE ENCASED.
5. SEE SHEET NOS. 2C10, 2C11 AND 2C12 FOR DETAILS OPF CATHODIC PROTECTION SYSTEMS.
6. SEE SHEET NO. 2C13 FOR DOMESTIC AND FIRE WATER DETAILS.

LEGEND:

- D 12" — EXISTING STORM DRAIN
- 6"FW — EXISTING FIRE WATER LINE
- 6"FW — NEW FIRE WATER LINE

FOR DETAIL AS-BUILT INFORMATION REFER TO CONSTRUCTION SUBMITTALS

DATE	REVISION

KEVIN K.O. WONG LICENSED PROFESSIONAL ENGINEER No. 8048-C HAWAII, U.S.A.

THIS WORK WAS PREPARED BY ME OR UNDER MY SUPERVISION

STATE OF HAWAII
DEPARTMENT OF TRANSPORTATION
HIGHWAYS DIVISION

CATHODIC PROTECTION
FIRE WATER LINE
EXPLORATORY TUNNEL IMPROVEMENTS
H-3 FINISH (UNIT III)
FAIP NO. I-H3-1(75), UNIT III
T.K. TUNNEL / ACCESS ROADS

SCALE: NTS DATE: JUN 1995

SHEET NO. 2C9 OF 15 SHEETS

ORIGINAL PLAN		DATE
	SURVEY PLOTTED BY	
	TRACED BY B. VUONG	JAN 95
	DESIGNED BY G. TE BOEKHORST	JAN 95
NOTE BOOK	QUANTITIES BY	
NO.	CHECKED BY D. MANITI	JAN 95

VUONG ELWOOD:I241D:IDWG.CIVIL3CS4206.FGB;1 01FEB95-15:21:40

FED. ROAD DIST. NO.	STATE	FED. AID PROJ. NO.	FISCAL YEAR	SHEET NO.	TOTAL SHEETS
HAWAII	HAW.	I-H3-1(75) UNIT III	1994	26	353

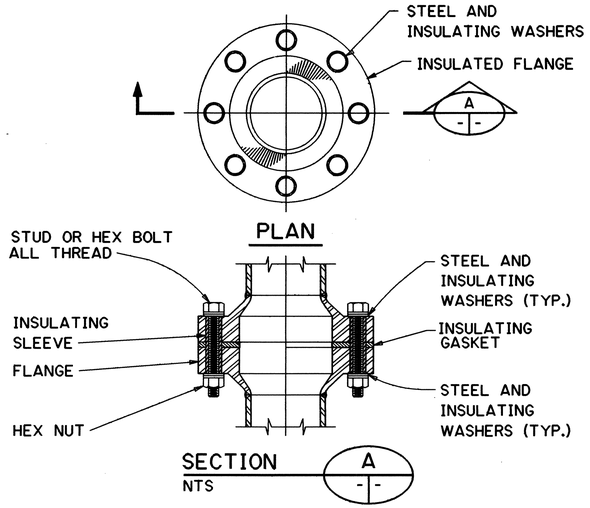

1. PROVIDE TEST FACILITIES FOR ALL BURIED AND EXPOSED INSULATED FLANGES.
2. THE FLANGE SHOWN IS DRAWN SCHEMATICALLY, SEE MECHANICAL PLANS FOR THE ACTUAL SHAPE AND SIZE.

INSULATED FLANGE

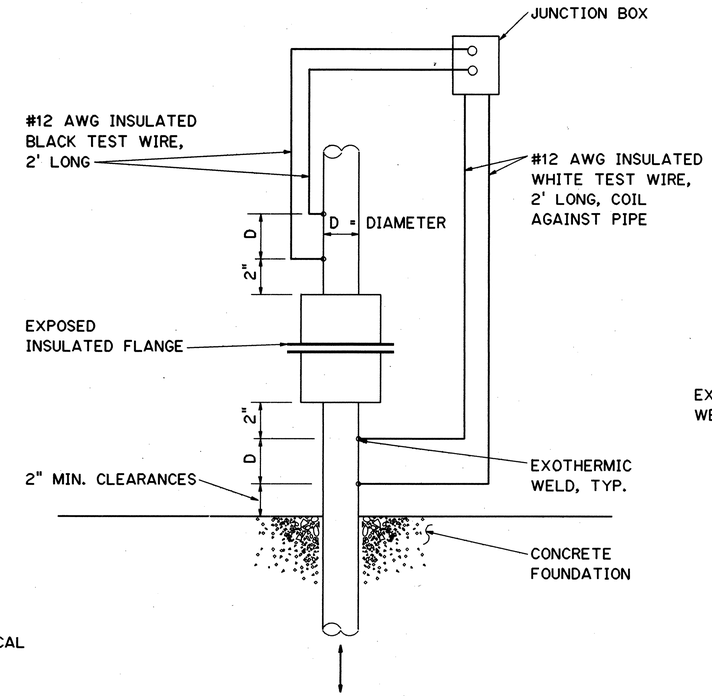

EXPOSED INSULATOR

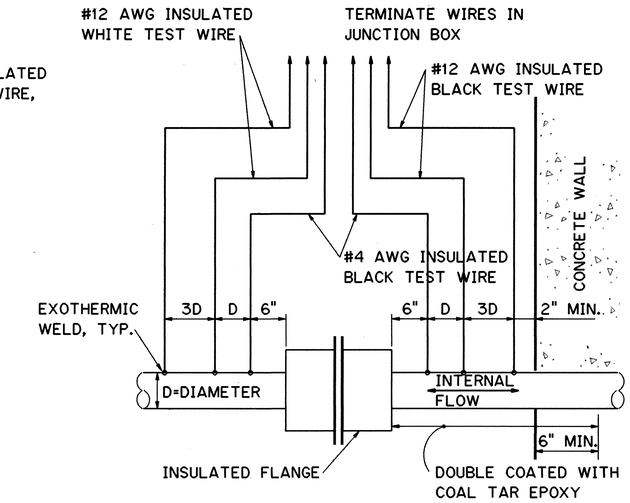

BURIED INSULATOR

NOTE

FOR GENERAL NOTES, SEE SHEET NO. 2C9.

DIELECTRIC INSULATORS FOR FIRE WATER LINES

NOTES FOR BURIED DIELECTRIC INSULATOR:

1. ALL BURIED TEST WIRES SHALL BE LOOSE LAID WITH SLACK TO PREVENT DAMAGE.
2. CAREFULLY BACKFILL AROUND TEST WIRES.
3. PLACE WHITE TEST WIRES ON THE NORTH OR THE EAST SIDE OF THE INSULATED FITTING.
4. EXTEND TEST WIRES TO TERMINAL BLOCK IN TEST BOX. DO NOT INTERCONNECT ANY TEST WIRES.
5. BURIED INSULATORS SHALL NOT BE COATED AND BACKFILLED BEFORE ELECTRICAL TESTS BY THE ENGINEER.

KEVIN K.O. WONG
LICENSED PROFESSIONAL ENGINEER
No. 8048-C
HAWAII, U.S.A.

THIS WORK WAS PREPARED BY ME OR UNDER MY SUPERVISION

DATE	REVISION

STATE OF HAWAII
DEPARTMENT OF TRANSPORTATION
HIGHWAYS DIVISION

CATHODIC PROTECTION
TYPICAL DETAILS - 1
EXPLORATORY TUNNEL IMPROVEMENTS
H-3 FINISH (UNIT III)
FAIP NO. I-H3-1(75), UNIT III
T.K. TUNNEL / ACCESS ROADS

SCALE: NTS DATE: JUN 1995

SHEET NO. 2C10 OF 15 SHEETS

ORIGINAL PLAN			DATE
	SURVEY PLOTTED BY		
	DRAWN BY	B. VUONG	JAN 95
NOTE BOOK	TRACED BY		
	DESIGNED BY	G. TE BOEKHORST	JAN 95
	QUANTITIES BY		
NO.	CHECKED BY	D. MANITT	JAN 95

AGUILAR 2410:[DWG.CIVIL]CS4010.FGB;1 01FEB95-11:10:40

FED. ROAD DIST. NO.	STATE	FED. AID PROJ. NO.	FISCAL YEAR	SHEET NO.	TOTAL SHEETS
HAWAII	HAW.	I-H3-1(75) UNIT III	1994	27	353

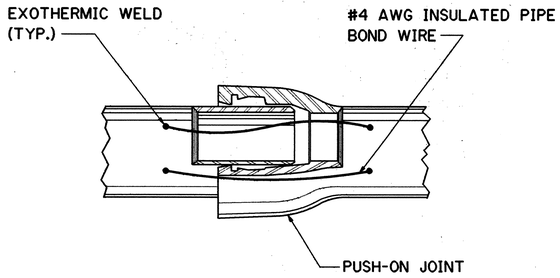

NOTES FOR JOINT BOND:

1. JOINT BONDS ARE REQUIRED FOR ALL CATHODICALLY PROTECTED PIPING.
2. SINGLE JOINT BOND WIRES SHALL BE 18 INCHES LONG, INSULATED, STRANDED #4 AWG COPPER WIRE.
3. EXOTHERMIC WELDS AND ADJACENT BARE WIRES ARE TO BE COATED WITH COAL TAR MASTIC.
4 PROVIDE TWO BOND WIRES FOR EACH PIPE JOINT AS SHOWN.

JOINT BOND

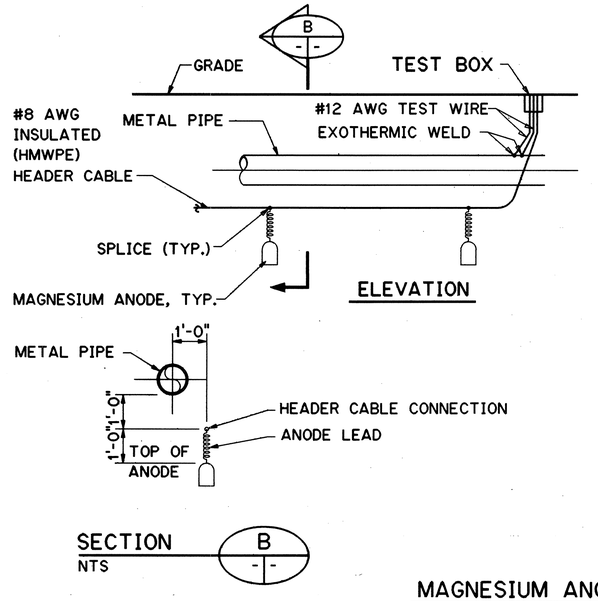

MAGNESIUM ANODE INSTALLATION

NOTES FOR TYPICAL MAGNESIUM ANODE INSTALLATION:

1. PROVIDE ANODE SIZE, TYPE AND SPACING AS SHOWN ON CATHODIC PROTECTION PLAN FOR EACH PROTECTED STRUCTURE.
2. LOCATE TEST BOXES IN STABLE, ACCESSIBLE AND PROTECTED LOCATIONS SUCH AS ADJACENT TO PERMANENT WALLS, SIDEWALKS, ETC.
3. DO NOT ATTACH GROUND CABLES OF ANY TYPE TO CATHODICALLY PROTECTED PIPING OR OTHER STRUCTURES.

NOTE:

FOR GENERAL NOTES, SEE SHEET NO. 2C9.

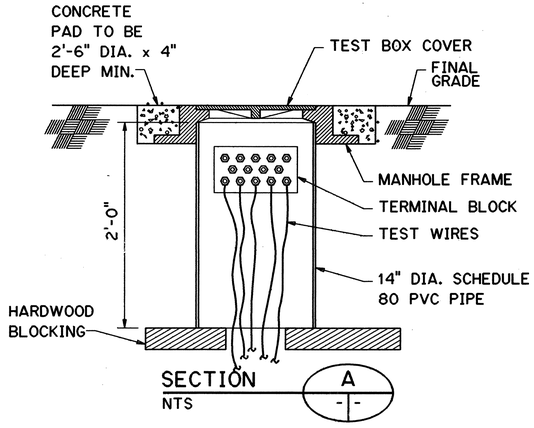

NOTES FOR AT-GRADE TEST BOX:

1. PROVIDE THE NUMBER, SIZE, TYPE, ETC. OF TEST WIRES FOR THE TYPE OF SYSTEM SHOWN (I.E., INSULATED FITTING, ANODE SYSTEM, ETC.)
2. PROVIDE HARDWOOD BLOCKING OR OTHER NON-METALLIC SUPPORT TO PREVENT SETTLEMENT AND/OR DAMAGE TO WIRE AND INSULATION.

AT-GRADE TEST BOX

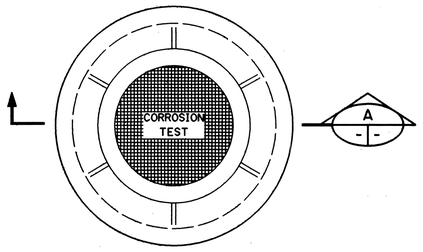

PLAN

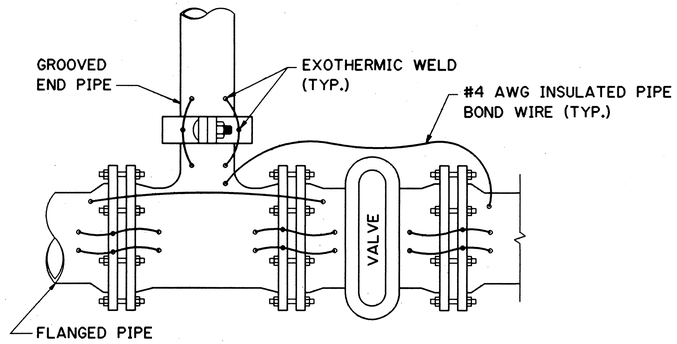

NOTES FOR TYPICAL FITTING BONDS:

1. FITTING BONDS ARE REQUIRED FOR ALL CATHODICALLY PROTECTED PIPING.
2. DETAIL SHOWS TYPICAL FITTINGS AND JOINT TYPES. BOND WIRES ARE REQUIRED FOR OTHER TYPES OF FITTINGS AND JOINT TYPES. INSTALL WIRES IN SIMILAR FASHION (I.E., TWO WIRES ACROSS EACH JOINT AND ONE WIRE ACROSS THE ENTIRE FITTING).
3. JOINT BOND WIRES SHALL BE 18 INCHES LONG, INSULATED, STRANDED #4 AWG COPPER WIRE. FITTING BOND WIRES TO BE THE MINIMUM LENGTH TO CROSS THE FITTING AS SHOWN.
4. EXOTHERMIC WELDS AND ADJACENT BARE WIRES ARE TO BE COATED WITH COAL TAR MASTIC.

FITTING BONDS

KEVIN K.O. WONG
LICENSED PROFESSIONAL ENGINEER
No. 8049-C
HAWAII, U.S.A.

THIS WORK WAS PREPARED BY ME OR UNDER MY SUPERVISION

DATE	REVISION

STATE OF HAWAII
DEPARTMENT OF TRANSPORTATION
HIGHWAYS DIVISION

CATHODIC PROTECTION TYPICAL DETAILS - 2

EXPLORATORY TUNNEL IMPROVEMENTS
H-3 FINISH (UNIT III)
FAIP NO. I-H3-1(75), UNIT III
T.K. TUNNEL / ACCESS ROADS

SCALE: NTS DATE: JUN 1995

SHEET NO. 2C11 OF 15 SHEETS

ORIGINAL PLAN	SURVEY PLOTTED BY	DATE
	DRAWN BY B. VUONG	JAN 95
NOTE BOOK	TRACED BY	"
	DESIGNED BY G. TE BOEKHORST	JAN 95
NO.	QUANTITIES BY	"
	CHECKED BY D. MANITT	JAN 95

AGUILAR 2410:(DWG.CIVIL)CS4011.FGB;1 01FEB95-10.23.50

FED. ROAD DIST. NO.	STATE	FED. AID PROJ. NO.	FISCAL YEAR	SHEET NO.	TOTAL SHEETS
HAWAII	HAW.	I-H3-1(75) UNIT III	1994	28	353

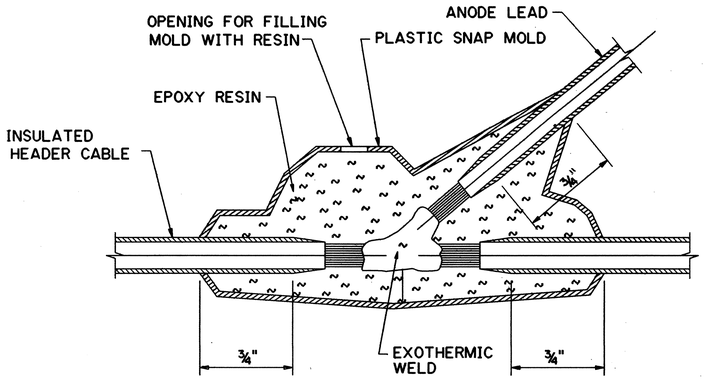

NOTES FOR SPLICE KIT AND WIRE CONNECTION:

1. WIRE INSULATION SHALL EXTEND WITHIN THE MOLD AS SHOWN AND ALL BARE COPPER AND CONNECTIONS ARE TO BE COMPLETELY ENCAPSULATED BY EPOXY RESIN.
2. CLEAN AND DRY EXOTHERMIC CONNECTION PRIOR TO INSTALLATION OF SNAP MOLD AND EPOXY RESIN.

SPLICE KIT AND WIRE CONNECTION

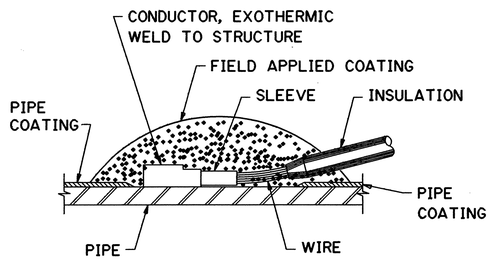

NOTES FOR EXOTHERMIC CONNECTION:

1. POWER GRIND, CLEAN AND DRY CONTACT SURFACE BEFORE MAKING EXOTHERMIC CONNECTION.
2. AFTER WELD HAS COOLED, REMOVE ALL SLAG AND TEST THE CONNECTION BY STRIKING WITH A HAMMER PRIOR TO COATING.
3. ALL EXOTHERMIC WELDS SHALL BE COATED WITH COAL TAR TAPE PER THE TAPE MANUFACTURER'S INSTRUCTIONS.

EXOTHERMIC CONNECTION

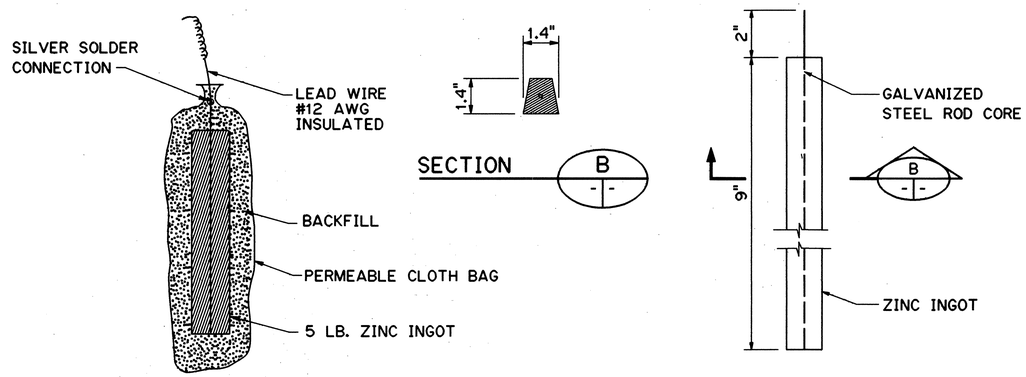

NOTES FOR REFERENCE ANODE:

1. BACKFILL MATERIAL WITHIN THE PREPACKAGED REFERENCE ANODE SHALL BE 50 PERCENT BENTONITE AND 50 PERCENT HYDRATED GYPSUM. NO SODIUM SULFATE SHALL BE PERMITTED.
2. LEAD WIRE/CORE CONNECTION SHALL BE A PERMANENT SILVER SOLDER CONNECTION.
3. REFERENCE ANODE SHALL BE INSTALLED AT THE SAME DEPTH AS THE BOTTOM OF THE PROTECTED STRUCTURE.
4. REFERENCE ANODE SHALL BE INSTALLED 10 TO 12 INCHES FROM THE PROTECTED STRUCTURE AND MUST NOT CONTACT THE PROTECTED STRUCTURE, OTHER ANODES OR METAL OBJECTS.

ZINC INGOT DETAIL

REFERENCE ANODE

NOTE:

FOR GENERAL NOTES, SEE SHEET NO. 2C9.

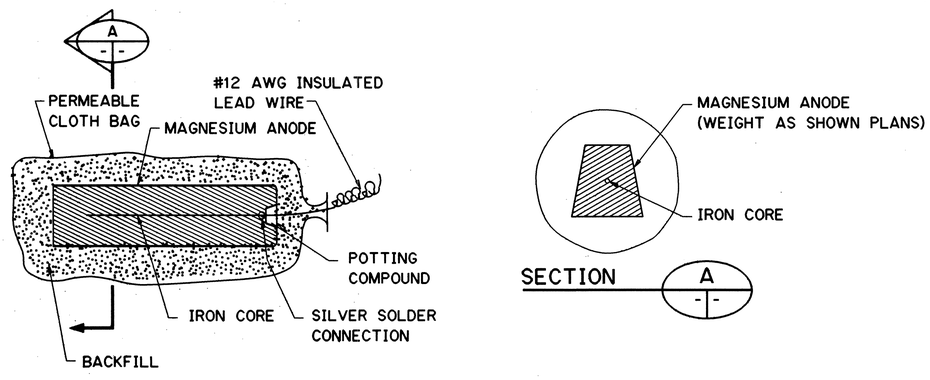

GENERAL NOTE FOR MAGNESIUM ANODE:

ANODE WITH CLOTH BAG AND BACKFILL SHALL BE REMOVED FROM ANY OTHER EXTERNAL PACKAGING SUCH AS PAPER BAGS OR CARDBOARD BOXES BEFORE INSTALLATION.

MAGNESIUM ANODE

DATE	REVISION

KEVIN K.O. WONG LICENSED PROFESSIONAL ENGINEER No. 8048-C HAWAII, U.S.A.

THIS WORK WAS PREPARED BY ME OR UNDER MY SUPERVISION

STATE OF HAWAII
DEPARTMENT OF TRANSPORTATION
HIGHWAYS DIVISION

CATHODIC PROTECTION TYPICAL DETAILS - 3

EXPLORATORY TUNNEL IMPROVEMENTS
H-3 FINISH (UNIT III)
FAIP NO. I-H3-1(75), UNIT III
T.K. TUNNEL / ACCESS ROADS

SCALE: NTS DATE: JUN. 1995

SHEET NO. 2C12 OF 15 SHEETS

ORIGINAL PLAN		DATE
	SURVEY PLOTTED BY	
	DRAWN BY B. VUONG	JAN 95
NOTE BOOK	TRACED BY	
	DESIGNED BY G. TE BOEKHORST	JAN 95
NO.	QUANTITIES BY	
	CHECKED BY D. MANITI	JAN 95

AGUILAR ELWOOD::2410:[DWG.CIVIL]CS4012.FGB;1 31JAN95-21.24.30

FED. ROAD DIST. NO.	STATE	FED. AID PROJ. NO.	FISCAL YEAR	SHEET NO.	TOTAL SHEETS
HAWAII	HAW.	I-H3-1(75) UNIT III	1994	29	353

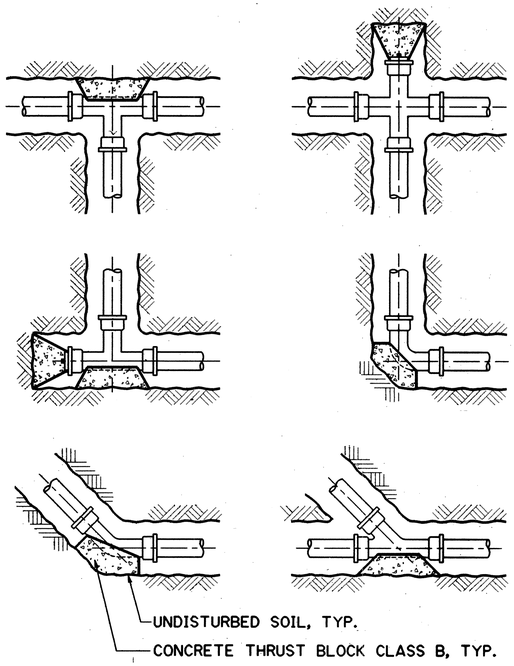

NOTES:

1. THE SIZE OF THE THRUST BLOCK MAY BE ADJUSTED BY THE ENGINEER IN THE FIELD ACCORDING TO ACTUAL SOIL CONDITION.
2. NO HORIZONTAL THRUST BLOCK IS NEEDED FOR LINES SMALLER THAN 3" AND WITH LESS THAN 50 psi OPERATING PRESSURE.

HORIZONTAL THRUST BLOCK FOR WATER MAINS

STANDARD DETAILS TITLE:	NO.	REMARK
1. 12-INCH VALVE BOX FRAME AND COVER	16	-
2. HYDRANT GUARD AND VALVE MARKER	33	-
3. HORIZONTAL THRUST BLOCK, MINIMUM BEARING AREAS	105	-
4. TOP VERTICAL THRUST BLOCK SCHEDULE	106	SEE BELOW
5. TYPICAL THRUST BLOCK VERTICAL BENDS	107	SEE BELOW
6. TYPICAL THRUST BLOCK WITH STRAPS FOR CONNECTIONS AT VERTICAL BEND	108	SEE BELOW

REMARK:

WITH APPROVAL OF THE ENGINEER, THE CONTRACTOR MAY USE ROCK ANCHORS FOR SECURING THRUST BLOCKS AT VERTICAL BENDS TO REDUCE THE SIZE OF CONCRETE ANCHORING BLOCK. THE MINIMUM PULL OUT LOAD OF EACH ROCK ANCHOR SHOULD BE 20 KIPS. EACH LEG OF HANGERS OR STEEL STRAPS SHOULD BE SECURELY BONDED/FASTENED TO A ROCK ANCHOR TO RESIST 20 KIPS MINIMUM PULL OUT FORCE.
THE MINIMUM SIZE OF CONCRETE TRUST BLOCK:
A = 0, B = 0, C = 0
MINIMUM WIDTH OF CONCRETE ENCASEMENT AROUND PIPE:
D = 24"
MINIMUM LENGTH OF CONCRETE ENCASEMENT = 14"
MINIMUM REQUIREMENT OF HANGERS = 3-#5

3. UNLESS OTHERWISE STATED, THE FOLLOWING SHALL BE USED TO CALCULATE THE MINIMUM BEARING AREA FOR THRUST BLOCKS:
WATER PRESSURE = 180 PSI

SOIL CONDITION	LOCATION	LATERAL BEARING PRESSURE
SOFT ROCK	TUNNEL AND CROSSPASSAGE	4000 PSF
COARSE SAND/ IMPORTED GRANULAR MATERIAL	SERVICE AREA AROUND PORTAL BLDG.	2000 PSF

GENERAL NOTES:

1. ITEMS OF WORK AND MATERIALS REQUIRED BUT NOT COVERED BY THE STANDARD PLANS NOR THE STANDARD SPECIFICATIONS SHALL CONFORM TO THE REQUIREMENTS OF THE BOARD OF WATER SUPPLY, CITY AND COUNTY OF HONOLULU.
2. THE APPLICABLE STANDARDS ARE:
   A. "APPROVED MATERIAL LIST AND STANDARD DETAILS FOR WATER SYSTEM CONSTRUCTION", 1985 EDITION, VOLUME 2.
   B. "WATER SYSTEM STANDARDS", 1985 EDITION, VOLUME 1.

BY:

DEPARTMENT OF WATER, COUNTY OF KAUAI
BOARD OF WATER SUPPLY, CITY AND COUNTY OF HONOLULU
DEPARTMENT OF WATER SUPPLY, COUNTY OF MAUI
DEPARTMENT OF WATER SUPPLY, COUNTY OF HAWAII

ORIGINAL PLAN		DATE
	SURVEY PLOTTED BY B. VUONG	JAN 95
	DRAWN BY " " " "	
NOTE BOOK	TRACED BY " " " "	
	DESIGNED BY G. TE BOEKHORST	JAN 95
	QUANTITIES BY " " " "	
NO.	CHECKED BY D. MANITI	JAN 95

KEVIN K.O. WONG
LICENSED PROFESSIONAL ENGINEER
No. 8048-C
HAWAII, U.S.A.

THIS WORK WAS PREPARED BY ME OR UNDER MY SUPERVISION

DATE	REVISION

STATE OF HAWAII
DEPARTMENT OF TRANSPORTATION
HIGHWAYS DIVISION

DOMESTIC & FIRE WATER TYPICAL DETAILS

EXPLORATORY TUNNEL IMPROVEMENTS
H-3 FINISH (UNIT III)
FAIP NO. I-H3-1(75), UNIT III
T.K. TUNNEL / ACCESS ROADS

SCALE: NTS DATE: JUN 1995

SHEET NO. 2C13 OF 15 SHEETS

AGUILAR ELWOOD::2410:DWG.CIVIL3CS4013.FGB71 31JAN95-21.25.40

FED. ROAD DIST. NO.	STATE	FED. AID PROJ. NO.	FISCAL YEAR	SHEET NO.	TOTAL SHEETS
HAWAII	HAW.	I-H3-1(75) UNIT III	1994	30	353

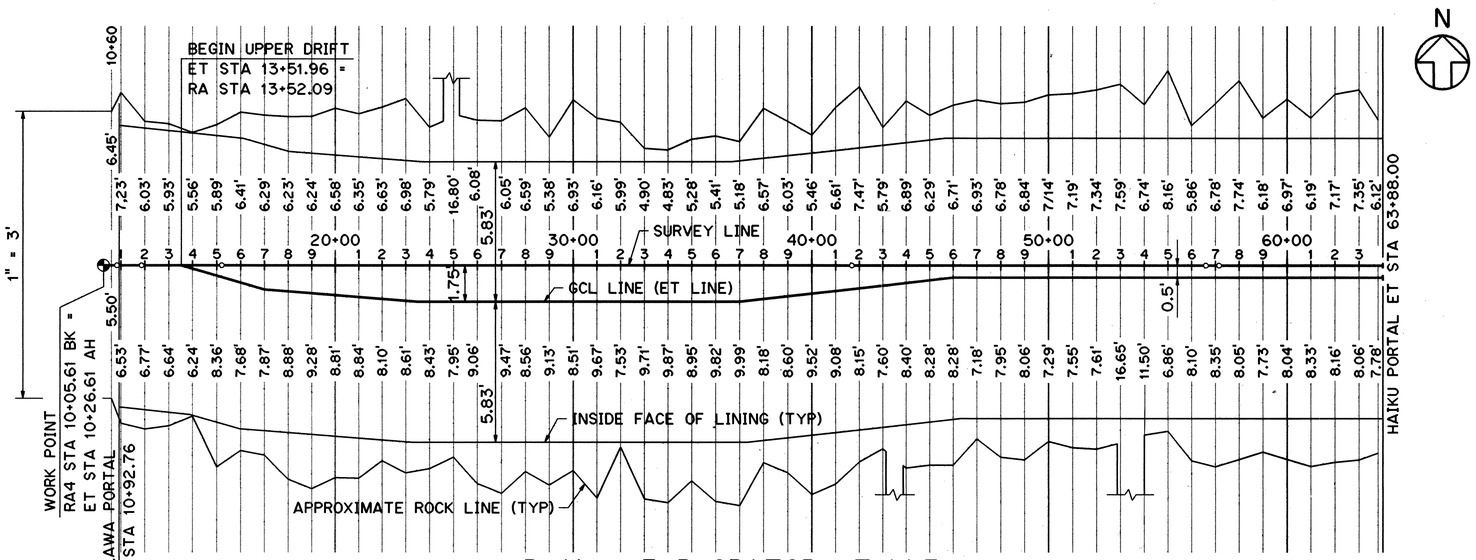

PLAN - EXPLORATORY TUNNEL

SCALE: HORIZ. 1" = 300'

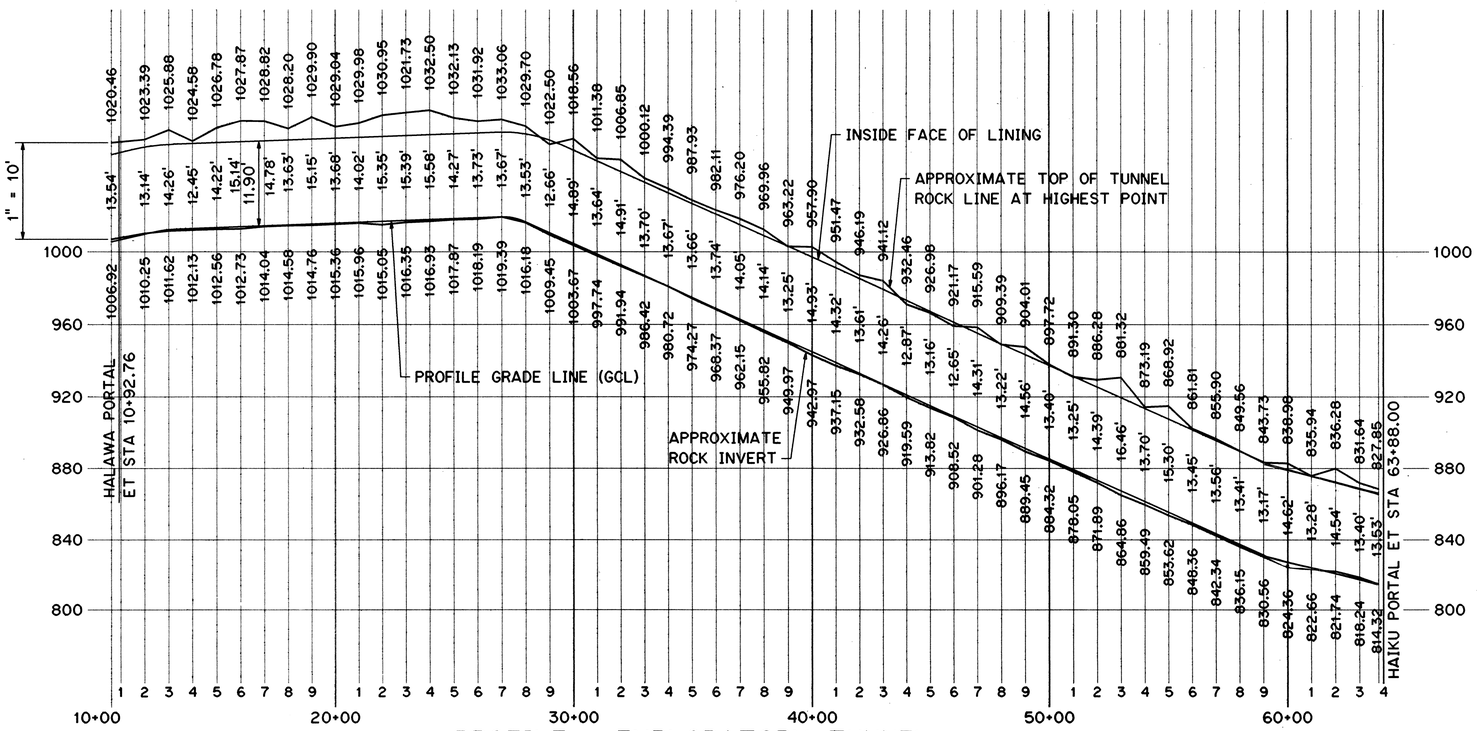

PROFILE - EXPLORATORY TUNNEL

SCALE: HORIZ. 1" = 300'
VERT. 1" = 40'

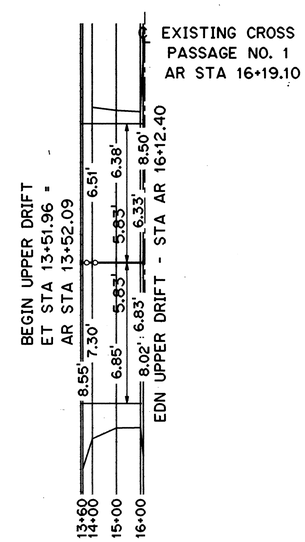

PLAN
UPPER DRIFT (RAMP)

SCALE: HORIZ. 1" = 300'
VERT. 1" = 3'

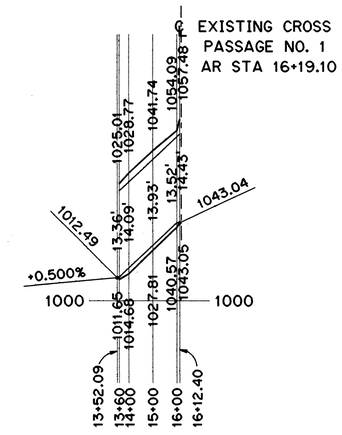

PROFILE
UPPER DRIFT (RAMP)

SCALE: HORIZ. 1" = 300'
VERT. 1" = 40'

NOTES:

1. SEE NOTE 1 ON SHEET NO. 2C1.
2. FOR HORIZONTAL AND VERTICAL ALIGNMENT DATA SEE SHEET NO. 2C4.
3. FOR TYPICAL TUNNEL SECTION SEE SHEET NO. 2C3.
4. FOR SURVEY DATA SEE SPECIAL PROVISIONS SECTION 801.

GRAPHIC SCALES

10' 0' 10' 20' — 1" = 10'
40' 0' 40' 80' — 1" = 40'
300' 0' 300' 600' — 1" = 300'
3' 0' 3' 6' — 1" = 3'

KEVIN K.O. WONG
LICENSED PROFESSIONAL ENGINEER
No. 8048-C
HAWAII, U.S.A.

THIS WORK WAS PREPARED BY ME OR UNDER MY SUPERVISION

DATE	REVISION

STATE OF HAWAII
DEPARTMENT OF TRANSPORTATION
HIGHWAYS DIVISION

AS-BUILT SURVEY DATA

EXPLORATORY TUNNEL IMPROVEMENTS
H-3 FINISH (UNIT III)
FAIP NO. I-H3-1(75), UNIT III
T.K. TUNNEL / ACCESS ROADS

SCALE: AS NOTED DATE: JUN 1995

SHEET NO. 2C14 OF 15 SHEETS

ORIGINAL PLAN | NOTE BOOK NO. | SURVEY PLOTTED BY | DRAWN BY | TRACED BY | DESIGNED BY | QUANTITIES BY | CHECKED BY | DATE

AGUILAR 2410:[DWG.CIVIL]CS4014.FGB;1 01FEB95-10.32.20

FED. ROAD DIST. NO.	STATE	FED. AID PROJ. NO.	FISCAL YEAR	SHEET NO.	TOTAL SHEETS
HAWAII	HAW.	I-H3-1(75) UNIT III	1994	31	353

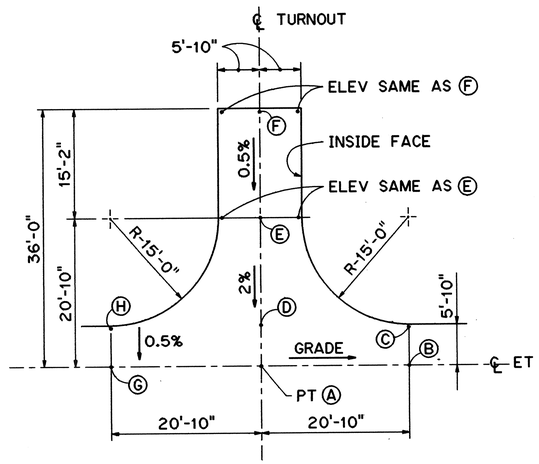

TYPICAL TURNOUT

SCALE: 1" = 10'

TABLE

TURNOUT NO.	℄ ET .STA	ET ELEV A	ET GRADE	POINT ELEV B	C	D	E	F	G	H
1	16+59.79	1014.02	+ 0.00497	1014.12	1014.15	1014.05	1014.35	1014.43	1013.92	1014.95
2	26+52.51	1018.95	+ 0.00497	1019.05	1019.08	1018.98	1019.28	1019.36	1018.85	1018.88
3	36+10.24	967.63	(-)0.05968	966.39	966.42	967.66	967.96	968.04	968.87	968.90
4	45+05.39	914.20	(-)0.05968	912.96	912.99	914.23	914.53	914.61	915.44	915.47
5	55+94.53	849.20	(-)0.05968	847.96	847.99	849.23	849.53	849.61	850.44	850.47

ORIGINAL PLAN	SURVEY PLOTTED BY	B. VUONG	DATE JAN 95
	DRAWN BY	" "	" JAN 95
	TRACED BY	" "	" JAN 95
NOTE BOOK	DESIGNED BY	G. TE BOEKHORST	JAN 95
	QUANTITIES BY		
NO.	CHECKED BY	D. MANITT	JAN 95

GRAPHIC SCALE

10' 0' 10' 20'

1" = 10'

THIS WORK WAS PREPARED BY ME OR UNDER MY SUPERVISION

KEVIN K.O. WONG LICENSED PROFESSIONAL ENGINEER No. 8048-C HAWAII, U.S.A.

DATE	REVISION

STATE OF HAWAII
DEPARTMENT OF TRANSPORTATION
HIGHWAYS DIVISION

GRADING DETAILS

EXPLORATORY TUNNEL IMPROVEMENTS
H-3 FINISH (UNIT III)
FAIP NO. I-H3-1(75), UNIT III
T.K. TUNNEL / ACCESS ROADS

SCALE: AS NOTED DATE: JUN 1995

SHEET NO. 2C15 OF 15 SHEETS

AGUILAR ELWOOD::2410:[DWG.CIVIL]CS4015.FGB;1 31JAN95-21.28.20

FED. ROAD DIST. NO.	STATE	FED. AID PROJ. NO.	FISCAL YEAR	SHEET NO.	TOTAL SHEETS
HAWAII	HAW.	I-H3-1(75) UNIT III	1994	32	353

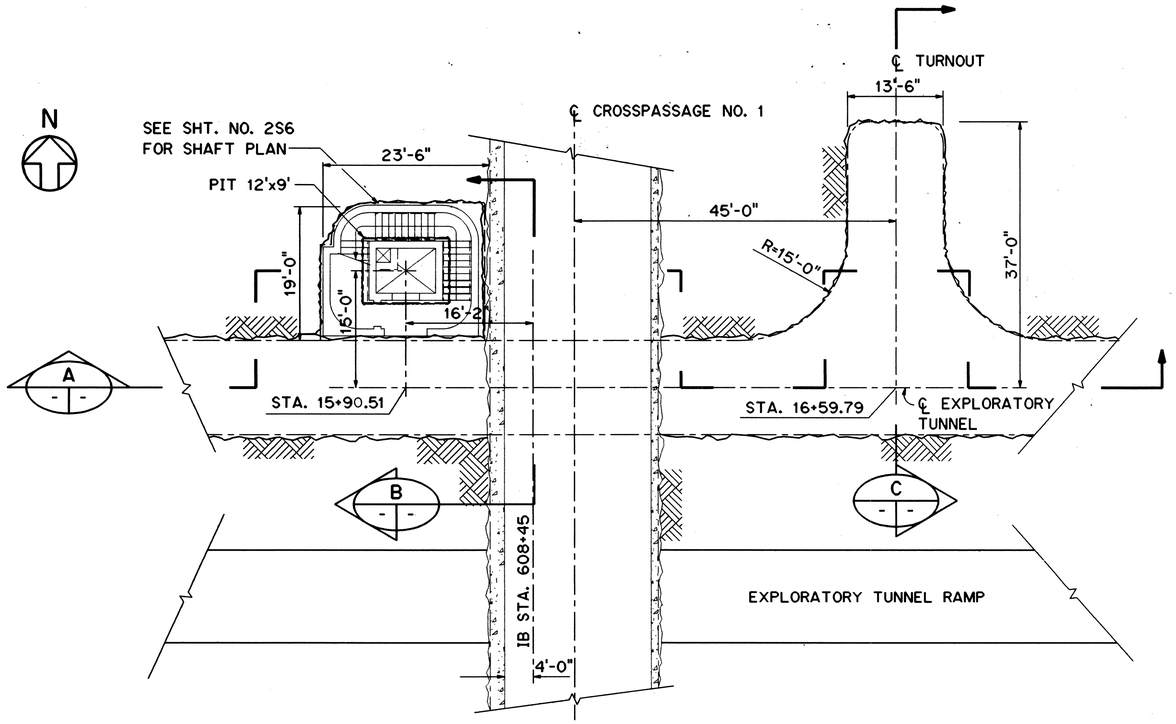

GENERAL ARRANGEMENT PLAN

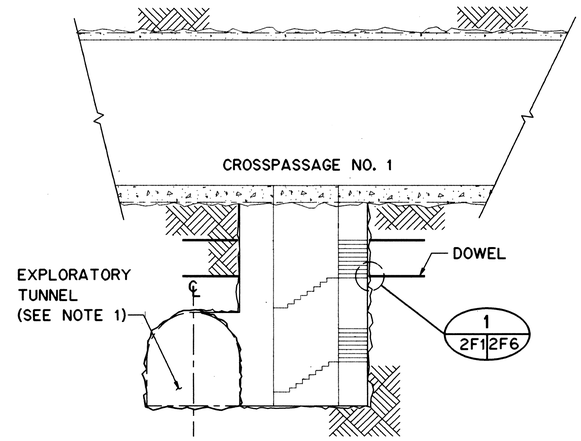

SECTION B

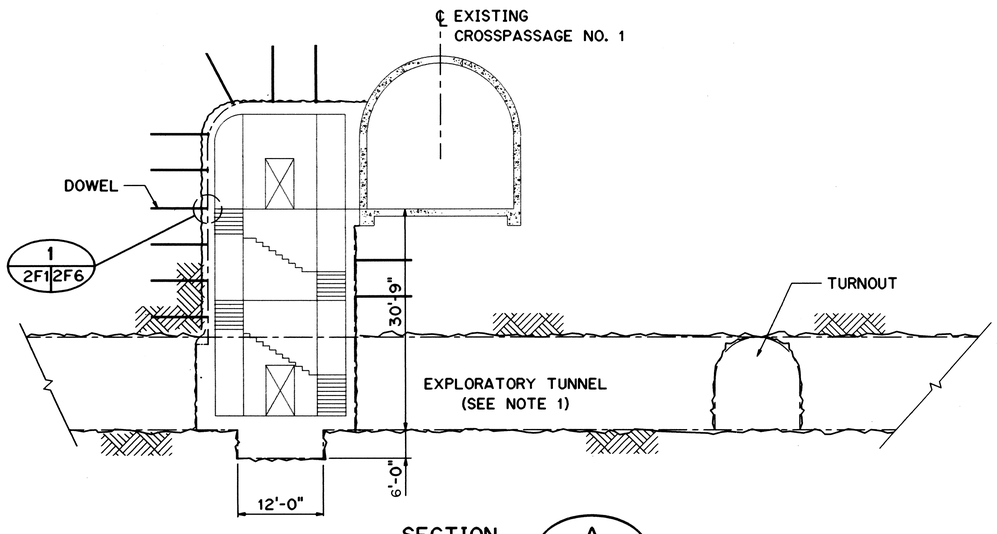

SECTION A

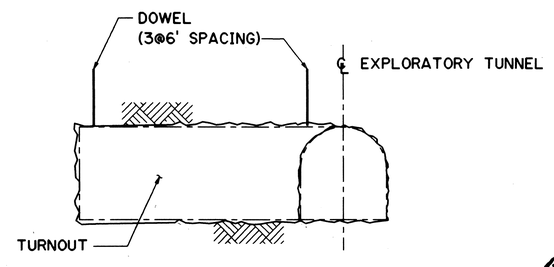

SECTION C

REFERENCE DOCUMENTS :

EXISTING EXPLORATORY TUNNEL
- FAIP NO. I-H3-1(37)
- FAIP NO. I-H3-1(64)
- TRANS-KOOLAU EXPLORATORY TUNNEL HAIKU APPROACH AND TUNNELS GEOLOGY
- TRANS-KOOLAU EXPLORATORY TUNNEL HALAWA APPROACH AND TUNNELS GEOLOGY

EXISTING CROSSPASSAGE:
- FAIP NO. I-H3-1(61)
- FAIP NO. I-H3-1(64)
- GEOLOGY AND CONSTRUCTION HISTORY SUMMARY; HALAWA AND HAIKU APPROACH AND TUNNELS

NOTES:

1. EXISTING GROUND SUPPORT IN THIS AREA CONSISTS OF THE FOLLOWING:
   - TYPE B SUPPORT INSTALLED DURING EXAVATION OF EXPLORATORY TUNNEL; CONSISTS OF 2 IN. CROWN SHOTCRETE AND AND THREE 6 FT. LONG CROWN DOWELS @ 6 FT. SPACING INSTALLED @ 40 FT. INTERVALS.
   - ADDITIONAL SUPPORT INSTALLED AFTER EXPLORATORY TUNNEL EXCAVATION, PRIOR TO CONSTRUCTION OF CROSSPASSAGE NO. 1. THIS CONSISTS OF 6 FT. LONG DOWELS IN A 40 FT. ZONE CENTERED @ STA 16+08.

FOR DETAIL AS-BUILT INFORMATION REFER TO CONSTRUCTION SUBMITTALS

DATE	REVISION

GRAPHIC SCALE
10' 0' 10' 20'
1" = 10'

CLAYTON S. MINAGA LICENSED PROFESSIONAL ENGINEER No.4176-C HAWAII, U.S.A.

THIS WORK WAS PREPARED BY ME OR UNDER MY SUPERVISION

Clayton S. Minaga

STATE OF HAWAII
DEPARTMENT OF TRANSPORTATION
HIGHWAYS DIVISION

CROSSPASSAGE NO. 1 CONNECTION/TURNOUT

EXPLORATORY TUNNEL IMPROVEMENTS
H-3 FINISH (UNIT III)
FAIP NO. I-H3-1(75), UNIT III
T.K. TUNNEL/ACCESS ROADS

SCALE: 1" = 10' DATE: JUN 1995

SHEET NO. 2F1 OF 13 SHEETS

ORIGINAL PLAN			DATE
	SURVEY PLOTTED BY		
	DRAWN BY	A. KORBMACHER	JAN 95
	TRACED BY		
	DESIGNED BY	D. OYENUGA	JAN 95
NOTE BOOK	QUANTITIES BY		
	CHECKED BY	G. BOYCE	JAN 95
NO.			

HERNANDEZ ELWOOD:::2410:DWG.GEOJGE005.FGB;1 24MAY95-08.24.40

FED. ROAD DIST. NO.	STATE	FED. AID PROJ. NO.	FISCAL YEAR	SHEET NO.	TOTAL SHEETS
HAWAII	HAW.	I-H3-1(75) UNIT III	1994	33	353

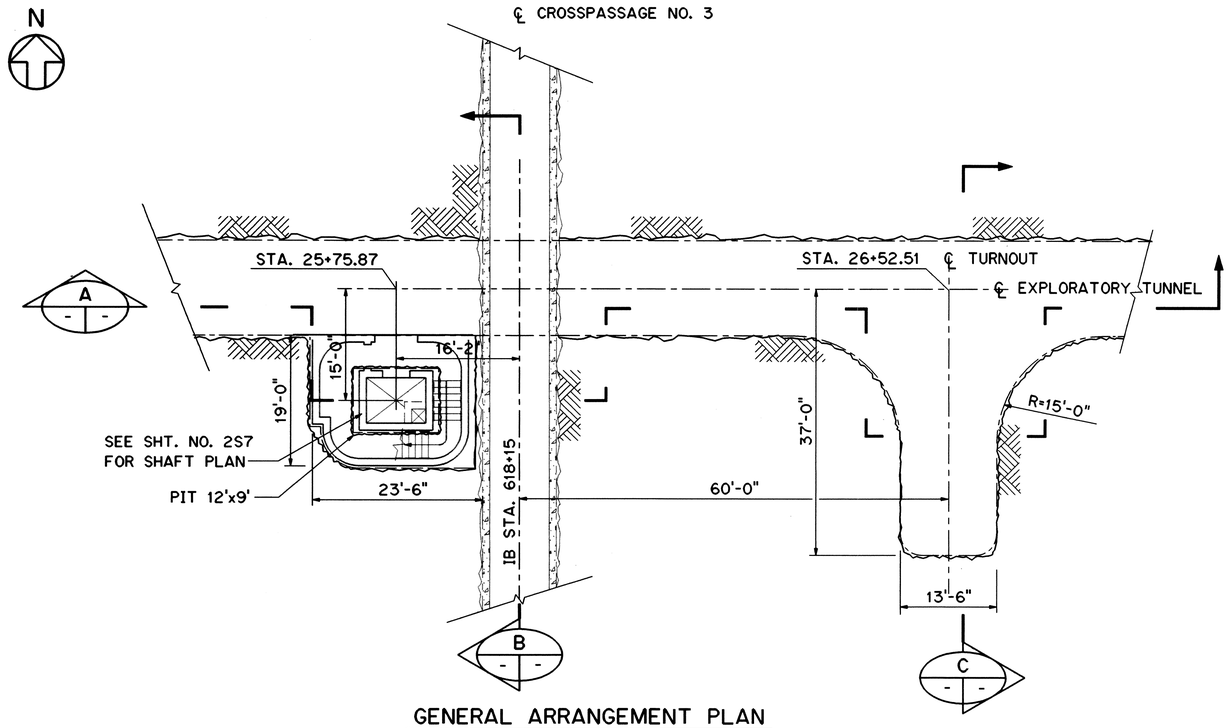

GENERAL ARRANGEMENT PLAN

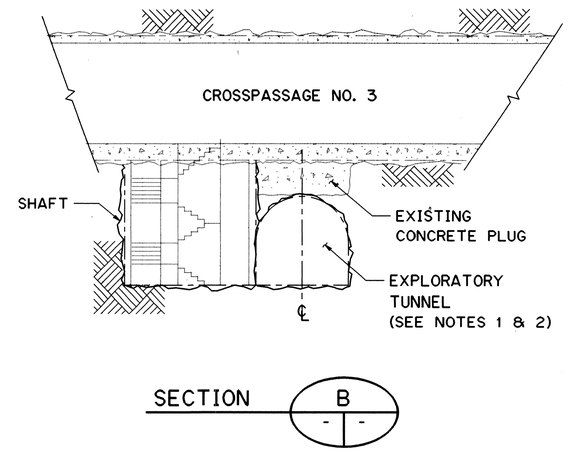

SECTION

NOTES:

1. EXISTING GROUND SUPPORT IN THIS AREA WAS INSTALLED AFTER EXCAVATION OF THE EXPLORATORY TUNNEL, PRIOR TO CONSTRUCTION OF CROSSPASSAGE NO. 3. IT CONSISTS OF 6 FT. LONG DOWELS IN A 40 FT. ZONE CENTERED AT STA 25+92.

2. NO GROUND SUPPORT (TYPE A SUPPORT) WAS REQUIRED DURING EXCAVATION OF THE EXPLORATORY TUNNEL IN THIS AREA.

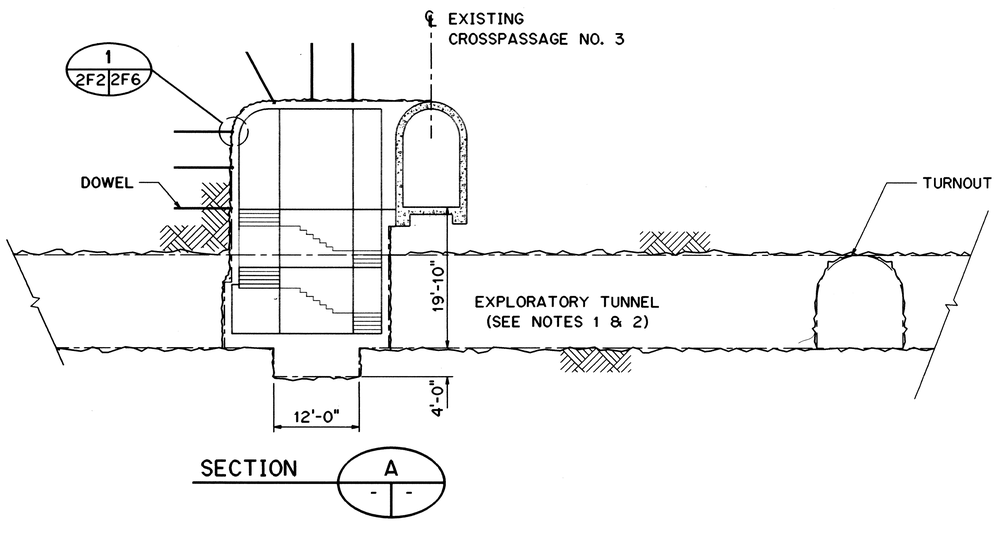

SECTION A

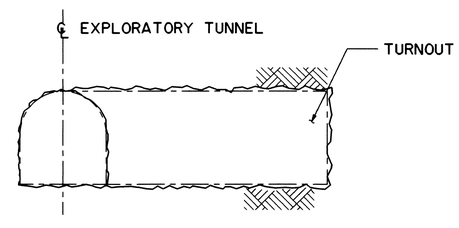

SECTION C

GRAPHIC SCALE
10' 0' 10' 20'
1" = 10'

CLAYTON G. MIMURA
LICENSED PROFESSIONAL ENGINEER
No.4178-C
HAWAII, U.S.A.

THIS WORK WAS PREPARED BY ME OR UNDER MY SUPERVISION

Clayton G. Mimura

DATE	REVISION

STATE OF HAWAII
DEPARTMENT OF TRANSPORTATION
HIGHWAYS DIVISION

CROSSPASSAGE NO. 3
CONNECTION/TURNOUT

EXPLORATORY TUNNEL IMPROVEMENTS
H-3 FINISH (UNIT III)
FAIP NO. I-H3-1(75), UNIT III
T.K. TUNNEL/ACCESS ROADS

SCALE: 1" = 10' DATE: JUN 1995

SHEET NO. 2F2 OF 13 SHEETS

ORIGINAL PLAN			DATE
	SURVEY PLOTTED BY		
	DRAWN BY	A. KORBMACHER	JAN 95
	TRACED BY		
NOTE BOOK	DESIGNED BY	D. OYENUGA	JAN 95
	QUANTITIES BY		
NO.	CHECKED BY	G. BOYCE	JAN 95

HERNANDEZ ELWOOD:::2410:DWG.GEOIGE008.FGB/T 16MAY95-11:20:10

FED. ROAD DIST. NO.	STATE	FED. AID PROJ. NO.	FISCAL YEAR	SHEET NO.	TOTAL SHEETS
HAWAII	HAW.	I-H3-1(75) UNIT III	1994	34	353

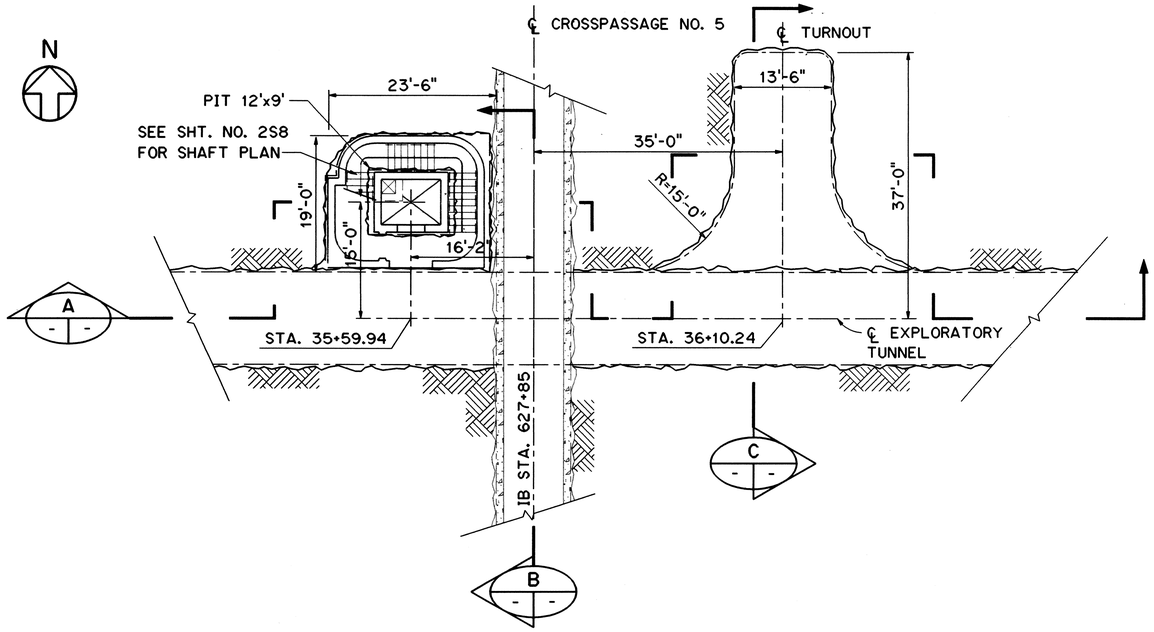

GENERAL ARRANGEMENT PLAN

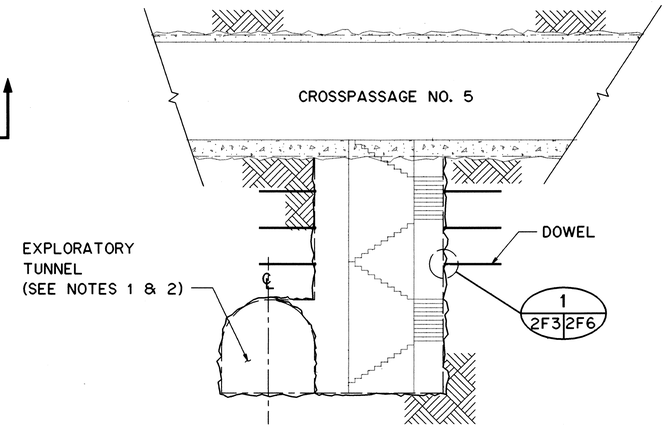

SECTION B

NOTES:

1. EXISTING GROUND SUPPORT IN THIS AREA WAS INSTALLED AFTER EXCAVATION OF THE EXPLORATORY TUNNEL, PRIOR TO CONSTRUCTION OF CROSSPASSAGE-NO. 5. IT CONSISTS OF 6 FT. LONG DOWELS IN A 40 FT. ZONE CENTERED AT STA 35+75.

2. NO GROUND SUPPORT (TYPE A SUPPORT) WAS REQUIRED DURING EXCAVATION OF THE EXPLORATORY TUNNEL IN THIS AREA.

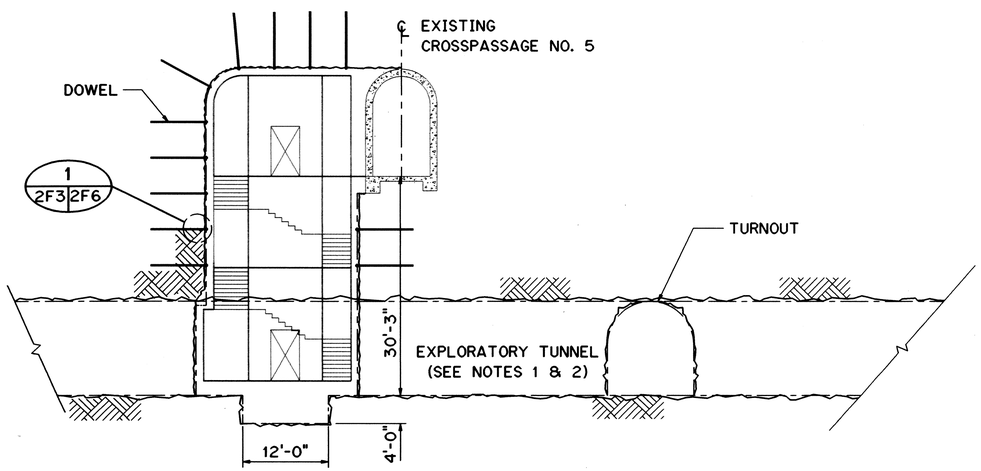

SECTION A

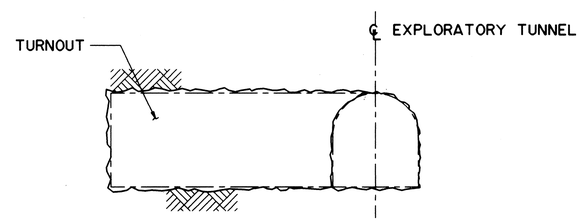

SECTION C

GRAPHIC SCALE
10' 0' 10' 20'
1" = 10'

CLAYTON S. MIMURA
LICENSED PROFESSIONAL ENGINEER
No.4176-C
HAWAII, U.S.A.

THIS WORK WAS PREPARED BY ME OR UNDER MY SUPERVISION

Clayton S. Mimura

DATE	REVISION

STATE OF HAWAII
DEPARTMENT OF TRANSPORTATION
HIGHWAYS DIVISION

CROSSPASSAGE NO. 5
CONNECTION/TURNOUT

EXPLORATORY TUNNEL IMPROVEMENTS
H-3 FINISH (UNIT III)
FAIP NO. I-H3-1(75), UNIT III
T.K. TUNNEL/ACCESS ROADS

SCALE: 1" = 10' DATE: JUN 1995

SHEET NO. 2F3 OF 13 SHEETS

ORIGINAL PLAN			
NOTE BOOK	SURVEY PLOTTED BY	A. KORBMACHER	JAN 95
	DRAWN BY	"	"
	TRACED BY	"	"
	DESIGNED BY	D. OYENUGA	JAN 95
	QUANTITIES BY	"	"
NO.	CHECKED BY	G. BOYCE	JAN 95

HERNANDEZ ELWOOD:::2410:IDWG.GEOJGE006.FGB71 16MAY95-11.24.20

FED. ROAD DIST. NO.	STATE	FED. AID PROJ. NO.	FISCAL YEAR	SHEET NO.	TOTAL SHEETS
HAWAII	HAW.	I-H3-1-(75) UNIT III	1994	35	353

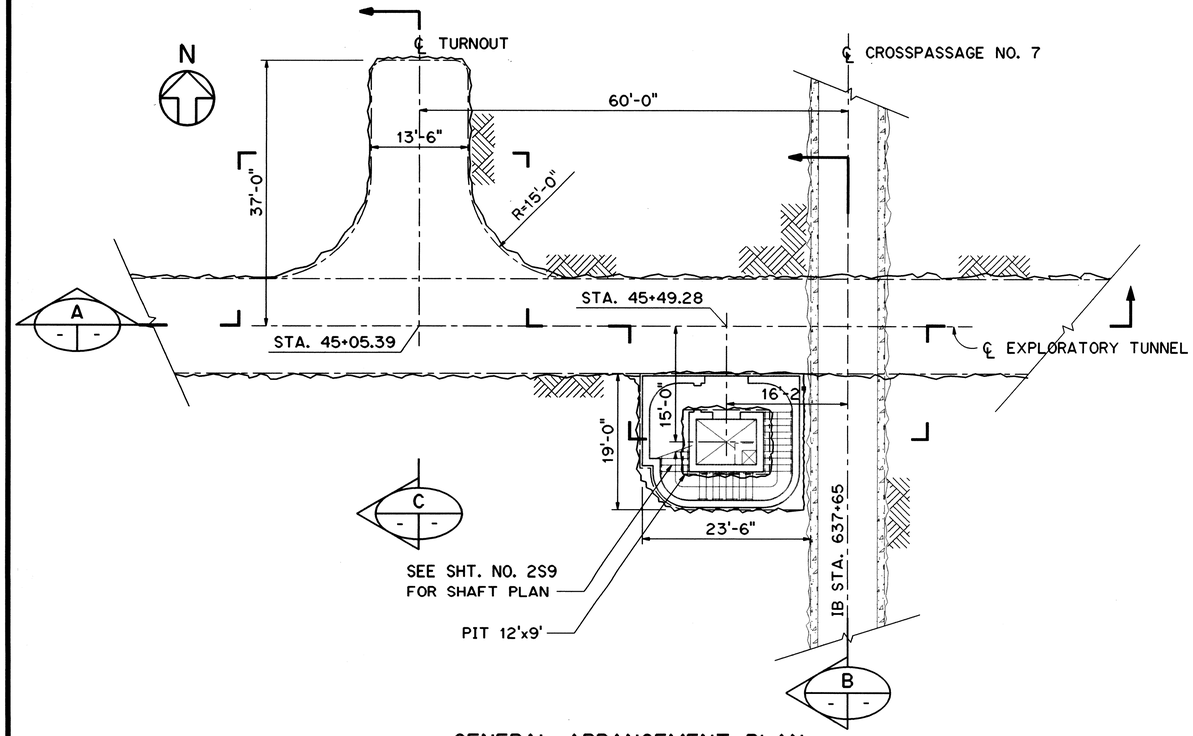

GENERAL ARRANGEMENT PLAN

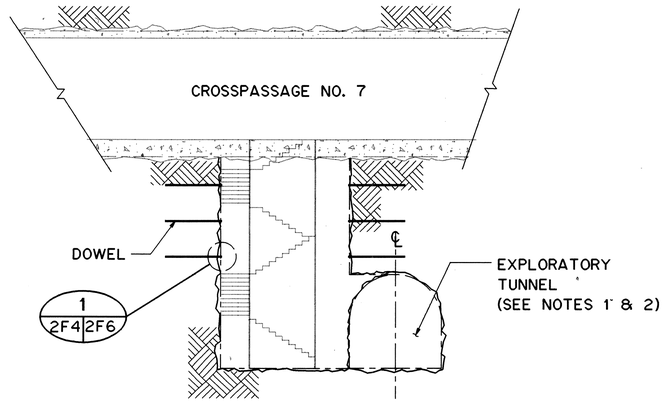

SECTION B

NOTES:

1. EXISTING GROUND SUPPORT IN THIS AREA WAS INSTALLED AFTER EXCAVATION OF THE EXPLORATORY TUNNEL, PRIOR TO CONSTRUCTION OF CROSSPASSAGE NO. 7. IT CONSISTS OF 6 FT. LONG DOWELS IN A 40 FT. ZONE CENTERED AT STA 45+65.

2. NO GROUND SUPPORT (TYPE A SUPPORT) WAS REQUIRED DURING EXCAVATION OF THE EXPLORATORY TUNNEL IN THIS AREA.

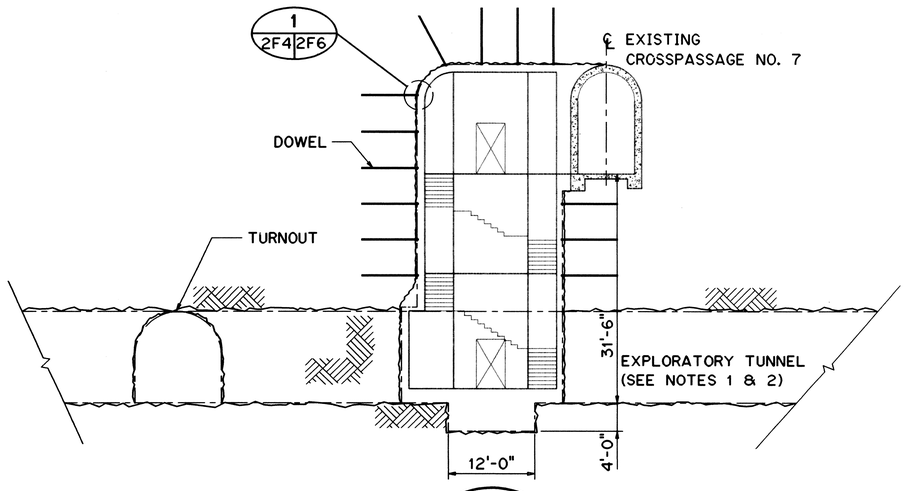

SECTION A

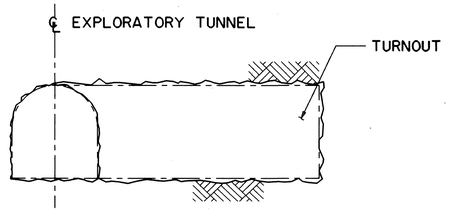

SECTION C

GRAPHIC SCALE
10' 0' 10' 20'
1" = 10'

CLAYTON S. MINAKATA
LICENSED PROFESSIONAL ENGINEER
No.4176-C
HAWAII, U.S.A.

THIS WORK WAS PREPARED BY ME OR UNDER MY SUPERVISION

Clayton S. Minakata

DATE	REVISION

STATE OF HAWAII
DEPARTMENT OF TRANSPORTATION
HIGHWAYS DIVISION

CROSSPASSAGE NO. 7 CONNECTION/TURNOUT

EXPLORATORY TUNNEL IMPROVEMENTS
H-3 FINISH (UNIT III)
FAIP NO. I-H3-1(75), UNIT III
T.K. TUNNEL/ACCESS ROADS

SCALE: 1" = 10' DATE: JUN 1995

SHEET NO. 2F4 OF 13 SHEETS

ORIGINAL PLAN			DATE
	SURVEY PLOTTED BY		
	DRAWN BY	A. KORBMACHER	JAN 95
	TRACED BY		
NOTE BOOK	DESIGNED BY	D. OYENUGA	JAN 95
	QUANTITIES BY		
NO.	CHECKED BY	G. BOYCE	JAN 95

HERNANDEZ ELWOOD:::2410:[DWG.GEOJGE009.FGB]T 18MAY95-11.31.00

FED. ROAD DIST. NO.	STATE	FED. AID PROJ. NO.	FISCAL YEAR	SHEET NO.	TOTAL SHEETS
HAWAII	HAW.	I-H3-1(75) UNIT III	1994	36	353

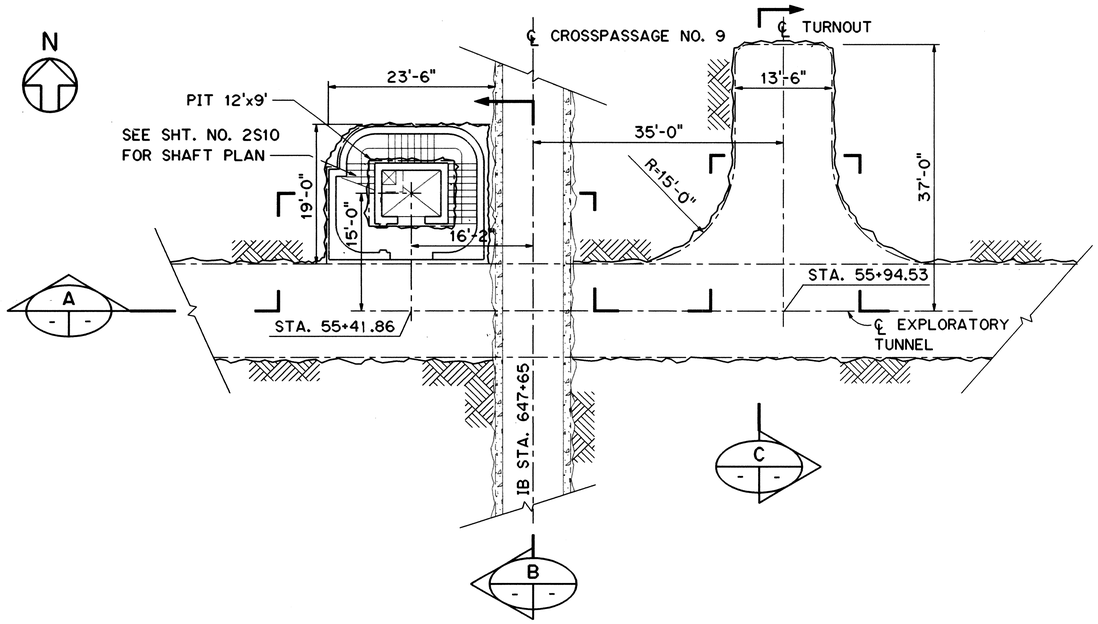

GENERAL ARRANGEMENT PLAN

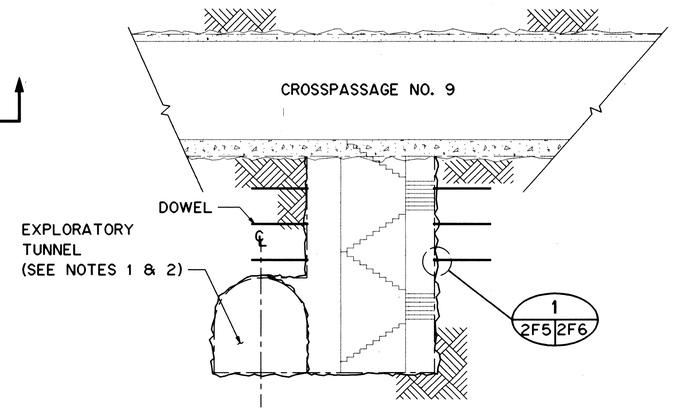

SECTION B

NOTES:

1. EXISTING GROUND SUPPORT IN THIS AREA WAS INSTALLED AFTER EXCAVATION OF THE EXPLORATORY TUNNEL, PRIOR TO CONSTRUCTION OF CROSSPASSAGE NO. 9. IT CONSISTS OF 6 FT. LONG DOWELS IN A 40 FT. ZONE CENTERED AT STA 55+59.
2. NO GROUND SUPPORT (TYPE A SUPPORT) WAS REQUIRED DURING EXCAVATION OF THE EXPLORATORY TUNNEL IN THIS AREA.

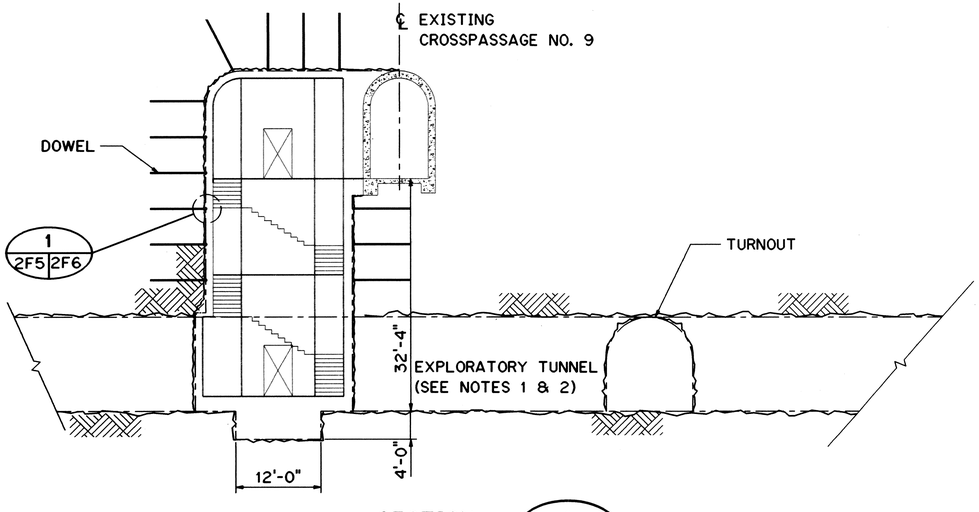

SECTION A

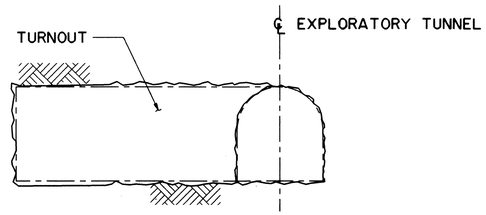

SECTION C

GRAPHIC SCALE
10' 0' 10' 20'
1" = 10'

THIS WORK WAS PREPARED BY ME OR UNDER MY SUPERVISION

Clayton S. Fujimura

CLAYTON S. FUJIMURA LICENSED PROFESSIONAL ENGINEER No.4176-C HAWAII, U.S.A.

DATE	REVISION

STATE OF HAWAII
DEPARTMENT OF TRANSPORTATION
HIGHWAYS DIVISION

CROSSPASSAGE NO. 9 CONNECTION/TURNOUT

EXPLORATORY TUNNEL IMPROVEMENTS

H-3 FINISH (UNIT III)
FAIP NO. I-H3-1(75), UNIT III
T.K. TUNNEL/ACCESS ROADS

SCALE: 1" = 10' DATE: JUN 1995

SHEET NO. 2F5 OF 13 SHEETS

36

ORIGINAL PLAN		DATE
	SURVEY PLOTTED BY	
	DRAWN BY A. KORBMACHER	JAN 95
	TRACED BY "	"
NOTE BOOK	DESIGNED BY D. OYENUGA	JAN 95
	QUANTITIES BY "	"
NO.	CHECKED BY G. BOYCE	JAN 95

HERNANDEZ ELWOOD:::2410:DWG.GEOJGE007.FGB71 16MAY95-11:37:00

FED. ROAD DIST. NO.	STATE	FED. AID PROJ. NO.	FISCAL YEAR	SHEET NO.	TOTAL SHEETS
HAWAII	HAW.	I-H3-1(75) UNIT III	1994	37	353

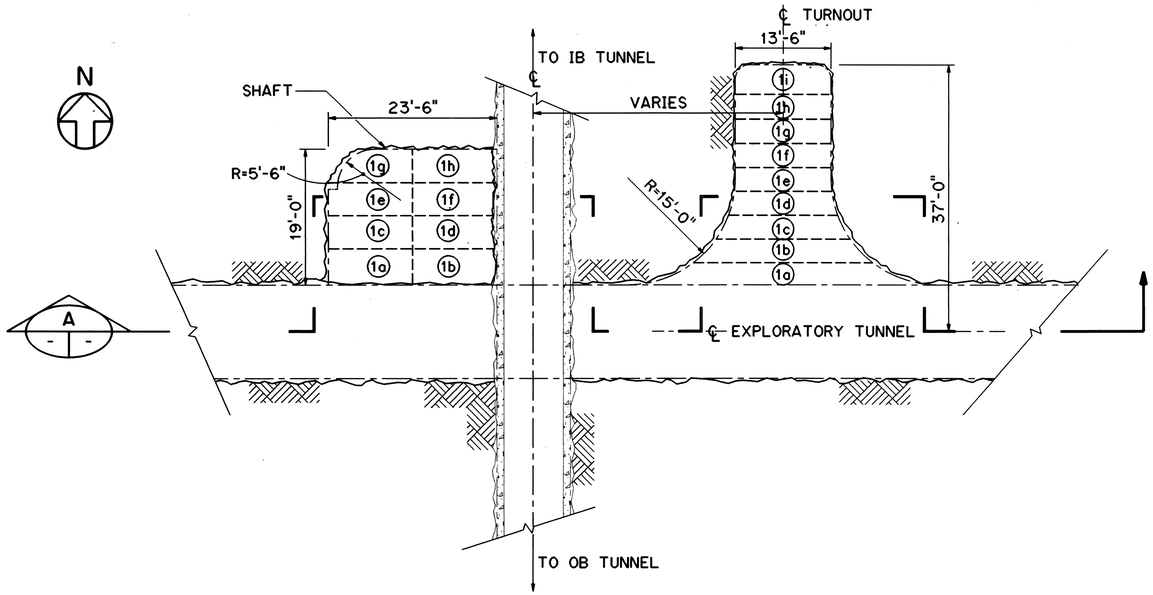

STAGE 1 - EXCAVATE AND SUPPORT ALCOVE AND TURNOUT AT EXPLORATORY TUNNEL LEVEL

PLAN

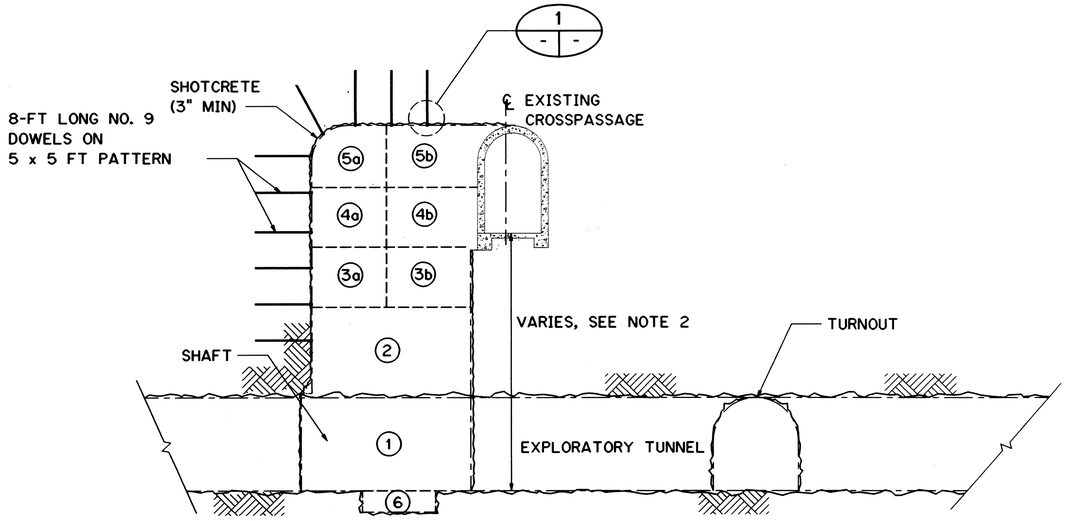

STAGE 2 - EXCAVATE AND SUPPORT VERTICAL SHAFT ABOVE EXPLORATORY TUNNEL LEVEL

SECTION A

EXCAVATION NOTES:

1. STAGED EXCAVATION IS REQUIRED.
2. SEE GENERAL ARRANGEMENT PLANS FOR CLEARANCE BETWEEN EXPLORATORY TUNNEL AND CROSSPASSAGES.
3. EXCAVATION (5'x5'x3.5') FOR SUMP NOT SHOWN, SEE SHEET NO. 2S13 FOR SUMP DETAIL.

LEGEND:

(1) EXCAVATION STAGE

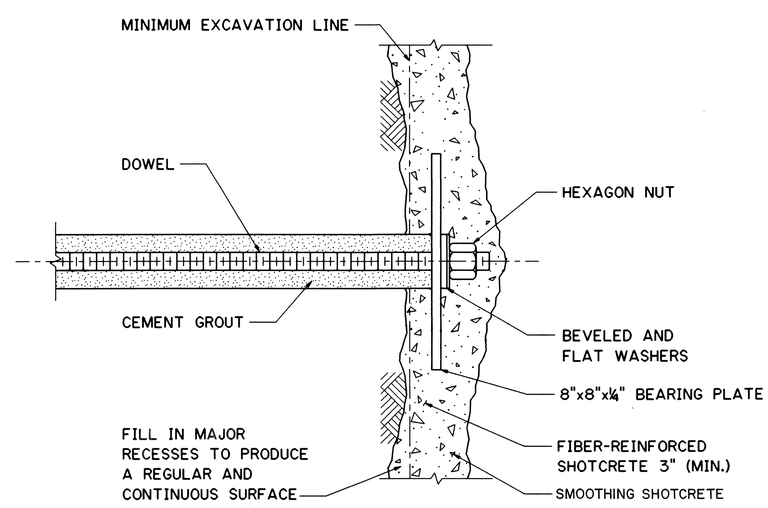

DETAIL 1

2F1
2F2
2F3
2F4
2F5
2F6

GRAPHIC SCALE
10' 0' 10' 20'
1" = 10'

CLAYTON S. WONG
LICENSED PROFESSIONAL ENGINEER
No. 4176-C
HAWAII, U.S.A.

THIS WORK WAS PREPARED BY ME OR UNDER MY SUPERVISION

DATE	REVISION
10/27/95	ADDENDUM 2 - CHANGED SECOND LAYER TO SMOOTHING SHOTCRETE IN DETAIL I
10/13/95	ADDENDUM I

STATE OF HAWAII
DEPARTMENT OF TRANSPORTATION
HIGHWAYS DIVISION

SUGGESTED EXCAVATION & SUPPORT SEQUENCE

EXPLORATORY TUNNEL IMPROVEMENTS
H-3 FINISH (UNIT III)
FAIP NO. I-H3-1(75), UNIT III
T.K. TUNNEL/ACCESS ROADS

SCALE: 1" = 10' DATE: JUN 1995

SHEET NO. 2F6 OF 13 SHEETS

SURVEY PLOTTED BY	A. KORBMACHER	JAN 95
DRAWN BY	"	"
TRACED BY	D. OYENUGA	JAN 95
DESIGNED BY	"	"
QUANTITIES BY	G. BOYCE	JAN 95
CHECKED BY	"	"

ORIGINAL PLAN
NOTE BOOK
NO.

HERNANDEZ ELWOOD:::2410:IDWG.GEOJGE004.FGB71 06JUN95-09.38.30

ADD. 37

FED. ROAD DIST. NO.	STATE	FED. AID PROJ. NO.	FISCAL YEAR	SHEET NO.	TOTAL SHEETS
HAWAII	HAW.	I-H3-1(75) UNIT III	1994	38	353

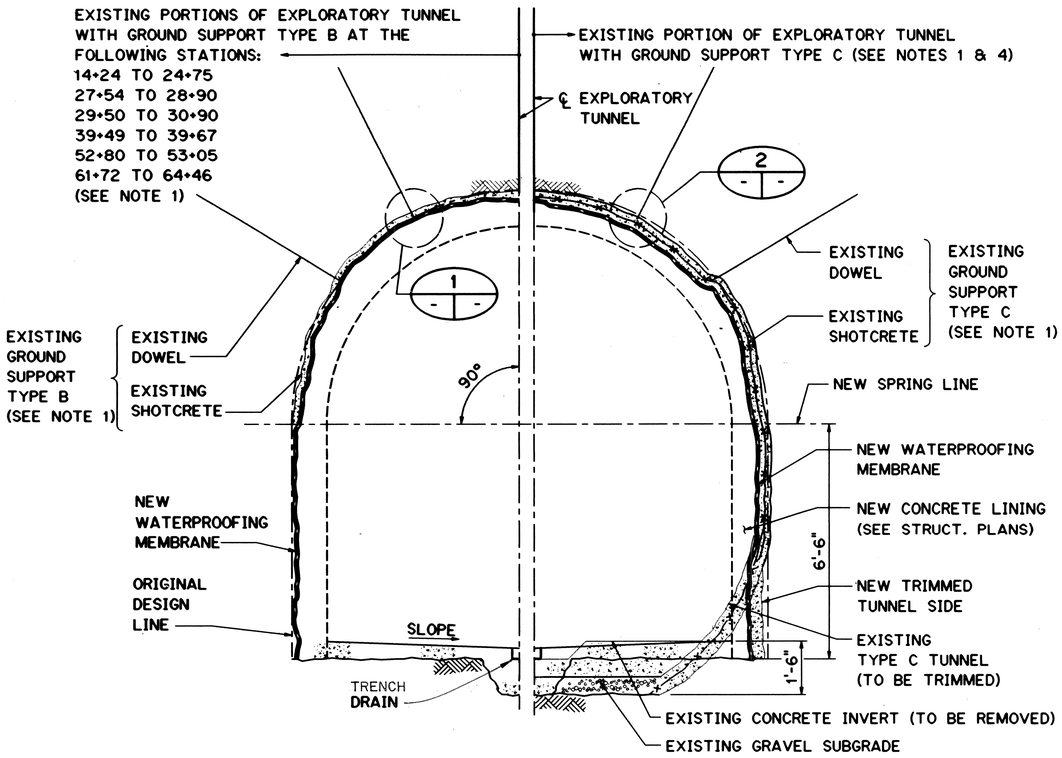

EXPLORATORY TUNNEL WATERPROOFING

SCALE: ½" = 1'-0"

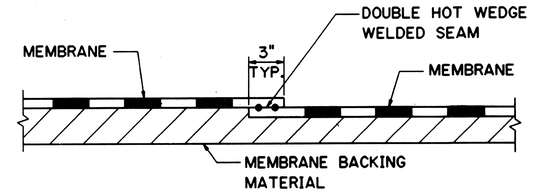

WATERPROOFING MEMBRANE JOINT DETAIL

N.T.S.

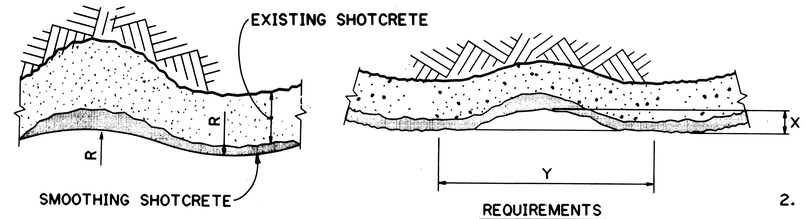

REQUIREMENTS
1. $R \geq 12"$
2. $X \leq 12"$; $X \leq \frac{Y}{5}$

SHOTCRETE SMOOTHNESS CRITERIA

N.T.S.

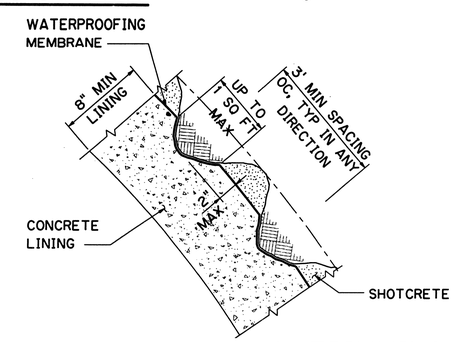

TIGHT AREA & TRIMMING ACCEPTANCE CRITERIA

NO SCALE

NOTES:

1. GROUND SUPPORT SELECTION FOR THE EXISTING EXPLORATORY TUNNEL WAS MADE IN THE HEADING DURING CONSTRUCTION AND CONSISTS OF THE FOLLOWING TYPES:
   - TYPE A — NO SUPPORT
   - TYPE B — CROWN SHOTCRETE AND DOWELS
   - TYPE C — FULL-PERIMETER SHOTCRETE AND DOWELS

   SEE:
   - FAIP NO. I-H3-1(64)
   - GEOLOGY AND CONSTRUCTION HISTORY SUMMARY, HALAWA & HAIKU APPROACH AND TUNNELS
   - TRANS-KOOLAU EXPLORATORY TUNNEL HALAWA APPROACH AND TUNNELS GEOLOGY
   - TRANS-KOOLAU EXPLORATORY TUNNEL HAIKU APPROACH AND TUNNELS GEOLOGY
2. WATERPROOFING MEMBRANE SHALL CONFORM TO THE ROCK. NO DRAPING OR LOOSE MEMBRANE WILL BE ALLOWED.
3. SPACE DISK ATTACHMENTS IN ACCORDANCE WITH THE SPECIAL PROVISIONS.
4. FOR THE PORTION OF THE EXPLORATORY TUNNEL WITH EXISTING TYPE C GROUND SUPPORT (STA. 10+68 TO STA. 14+88), THE CONTRACTOR SHALL:
   - TRIM TUNNEL TIGHTS, TRIM TUNNEL SIDES, AND REMOVE THE EXISTING CONCRETE INVERT. TUNNEL SIDES SHALL BE TRIMMED IN SECTIONS; EACH SECTION SHALL NOT BE GREATER THAN 10 FT.
   - INSTALL NEW SHOTCRETE PRIOR TO PLACING TUNNEL WATERPROOFING.
5. IN AREAS WHERE NO SHOTCRETE WAS USED FOR GROUND SUPPORT AND FULL PERIMETER WATERPROOFING IS REQUIRED, A 1-INCH MINIMUM LAYER OF SHOTCRETE SHALL BE PLACED FOR INSTALLATION OF THE WATERPROOFING MEMBRANE.
6. SMOOTHING SHOTCRETE REQUIRED TO MEET SHOTCRETE SMOOTHNESS CRITERIA.
7. THE WATERPROOFING MEMBRANE WITHIN THE EXPLORATORY TUNNEL SHOULD BE WELDED TO THE CROSSPASSAGE CONNECTION WATERPROOFING MEMBRANE WHENEVER THE TWO COINCIDE.

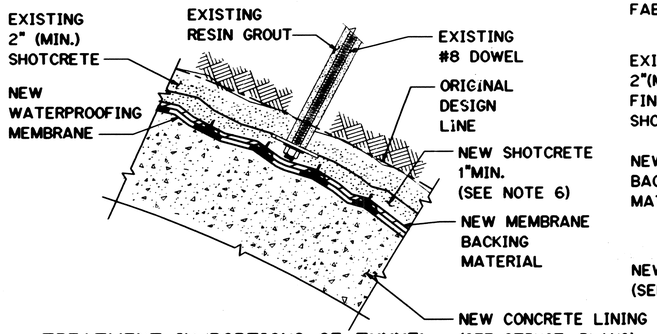

TREATMENT IN PORTIONS OF TUNNEL SUPPORT TYPE B

DETAIL 1 (-/-)
N.T.S.

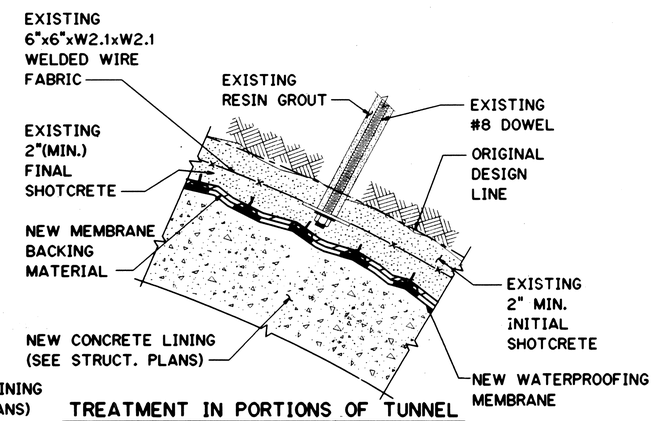

TREATMENT IN PORTIONS OF TUNNEL SUPPORT TYPE C

DETAIL 2 (-/-)
N.T.S.

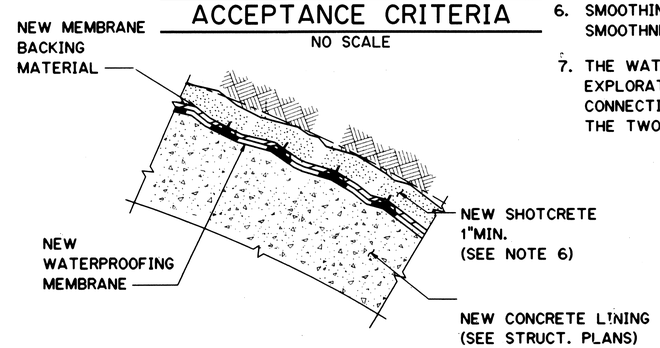

TREATMENT IN PORTIONS OF TUNNEL SUPPORT TYPE A

DETAIL 3 (2F8/2F7)
N.T.S.

GRAPHIC SCALE
2' 1' 0' 2' 4'
½" = 1'-0"

10/27/95	ADDENDUM 2 - ADDED 'TIGHT AREA & TRIMMING ACCEPTANCE CRITERIA'
10/13/95	ADDENDUM 1
DATE	REVISION

STATE OF HAWAII
DEPARTMENT OF TRANSPORTATION
HIGHWAYS DIVISION

TUNNEL WATERPROOFING

EXPLORATORY TUNNEL IMPROVEMENTS

H-3 FINISH (UNIT III)
FAIP NO. I-H3-1(75), UNIT III
T.K. TUNNEL/ACCESS ROADS

SCALE: AS NOTED — DATE: JUN 1995

CLAYTON S. MINAKAMI — LICENSED PROFESSIONAL ENGINEER — No.4176-C — HAWAII, U.S.A.

THIS WORK WAS PREPARED BY ME OR UNDER MY SUPERVISION

Clayton S. Minakami

SHEET NO. 2F7 OF 13 SHEETS

ADD. 38

ORIGINAL PLAN		DATE
	SURVEY PLOTTED BY	
	DRAWN BY A. KORBMACHER	JAN 95
	TRACED BY	
	DESIGNED BY D. OYENUGA	JAN 95
NOTE BOOK	QUANTITIES BY	
	CHECKED BY G. BOYCE	JAN 95
NO.		

HERNANDEZ ELWOOD:::2410:IDWG.GEO1GE017.FGB71 24MAY95-08.38.20

FED. ROAD DIST. NO.	STATE	FED. AID PROJ. NO.	FISCAL YEAR	SHEET NO.	TOTAL SHEETS
HAWAII	HAW.	I-H3-1(75) UNIT III	1994	39	353

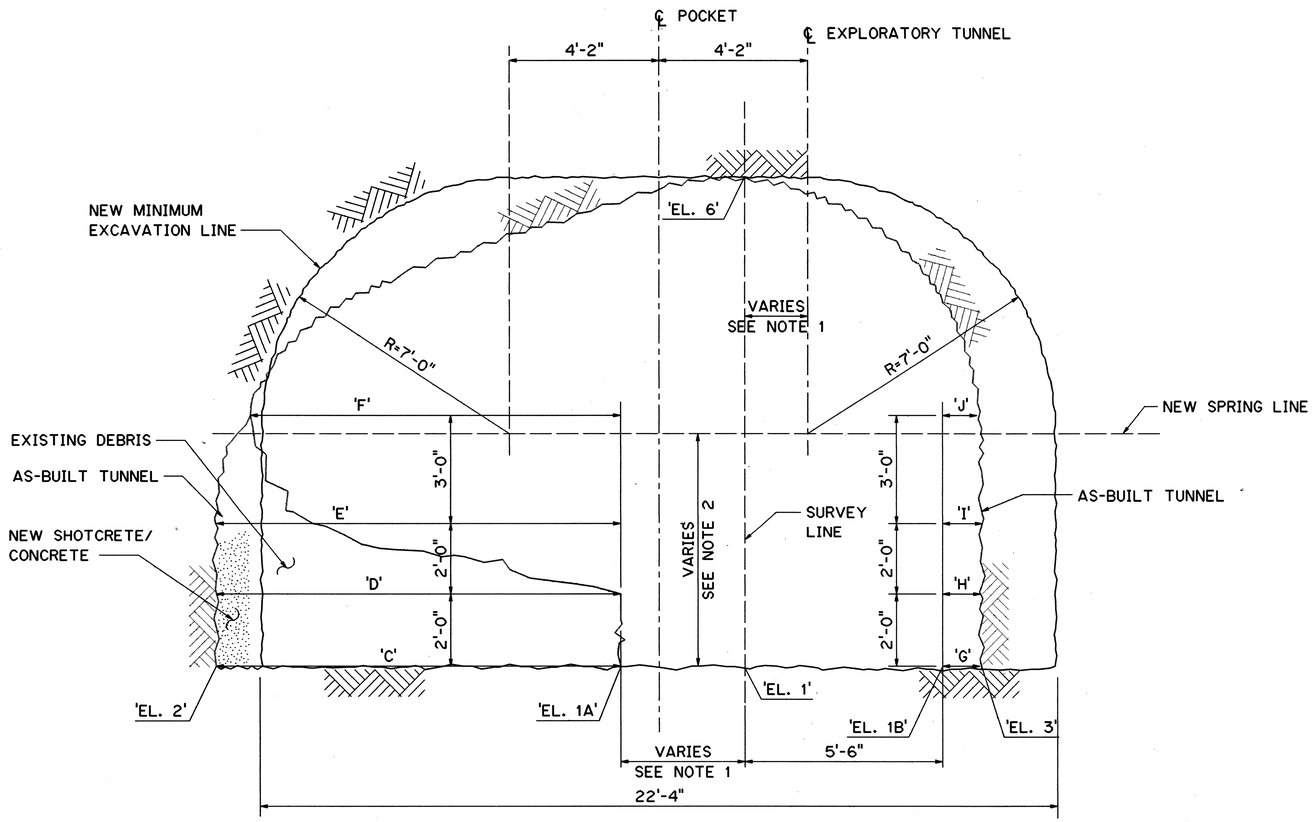

SECTION OF PASSING POCKET NO. 1

STA. 24+63 TO 25+23 (LEFT SIDE)

AS-BUILT DATA SCHEDULE

STA.	EL. 1	EL. 1A	EL. 1B	EL. 2	EL. 3	EL. 6	C	D	E	F	G	H	I	J
24+60	1017.28	1017.48	1017.21	1017.56	1016.89	1031.79	1.15	1.40	0.32	0.50	2.58	3.86	3.25	3.35
24+70	1017.63	1017.83	1017.40	1017.99	1017.22	1031.69	2.96	3.28	4.15	4.67	2.90	3.36	3.60	3.75
24+80	1017.89	1017.92	1017.70	1018.20	1017.67	1033.02	5.50	6.38	7.30	6.05	1.82	2.88	3.27	2.92
24+90	1017.95	1018.43	1017.76	1018.43	1017.71	1032.44	0.00	0.00	9.45	7.55	2.02	2.80	2.77	3.00
25+00	1017.84	1018.04	1017.69	1018.04	1017.67	1032.13	0.00	0.00	11.30	10.35	1.77	2.75	3.13	2.79
25+10	1017.69	1017.96	1017.54	1017.96	1017.39	1032.71	0.00	0.00	10.95	8.24	2.42	2.72	3.02	2.93
25+20	1017.67	1017.84	1017.42	1017.84	1017.10	1032.46	0.00	0.00	9.82	9.10	2.80	3.30	3.45	3.35
25+25	1017.67	1018.26	1017.42	1018.26	1017.24	1032.34	0.34	0.38	0.54	0.25	2.45	3.43	3.60	3.70

NOTES:

1. SEE SHT. NOS. 2C1, 2C2 AND 2C3, FOR GENERAL PLAN.
2. SEE SHT. NO. 2C4, FOR ALIGNMENT PLAN AND PROFILE.
3. SEE SHT. NO. 2C14, FOR AS-BUILT SURVEY DATA.
4. SEE SHT. NO. 2S5 FOR DETAILS OF PASSING POCKET LINING.
5. WATERPROOFING SHALL FOLLOW THE DETAILS SHOWN ON SHT. NO. 2F7 DEPENDING ON EXISTING GROUND SUPPORT TYPE (A, B OR C) INSTALLED IN THE PASSING POCKET.

ORIGINAL PLAN		DATE
SURVEY PLOTTED BY	A. KORBMACHER	JAN 95
DRAWN BY	" "	" "
TRACED BY	D. OYENUGA	JAN 95
DESIGNED BY	" "	" "
QUANTITIES BY	G. BOYCE	JAN 95
CHECKED BY	" "	" "
NOTE BOOK NO.		

GRAPHIC SCALE

2' 1' 0' 2' 4'

½" = 1'-0"

CLAYTON S. MIMURA LICENSED PROFESSIONAL ENGINEER No.4176-C HAWAII, U.S.A.

THIS WORK WAS PREPARED BY ME OR UNDER MY SUPERVISION

Clayton S. Mimura

DATE	REVISION

STATE OF HAWAII
DEPARTMENT OF TRANSPORTATION
HIGHWAYS DIVISION

PASSING POCKET NO.1 CONNECTION

EXPLORATORY TUNNEL IMPROVEMENTS
H-3 FINISH (UNIT III)
FAIP NO. I-H3-1(75), UNIT III
T.K. TUNNEL/ACCESS ROADS

SCALE: ½" = 1'-0" DATE: JUN 1995

SHEET NO. 2F8 OF 13 SHEETS

FED. ROAD DIST. NO.	STATE	FED. AID PROJ. NO.	FISCAL YEAR	SHEET NO.	TOTAL SHEETS
HAWAII	HAW.	I-H3-1(75) UNIT III	1994	40	353

NOTE:

SEE SHEET NO. 2F8 FOR NOTES.

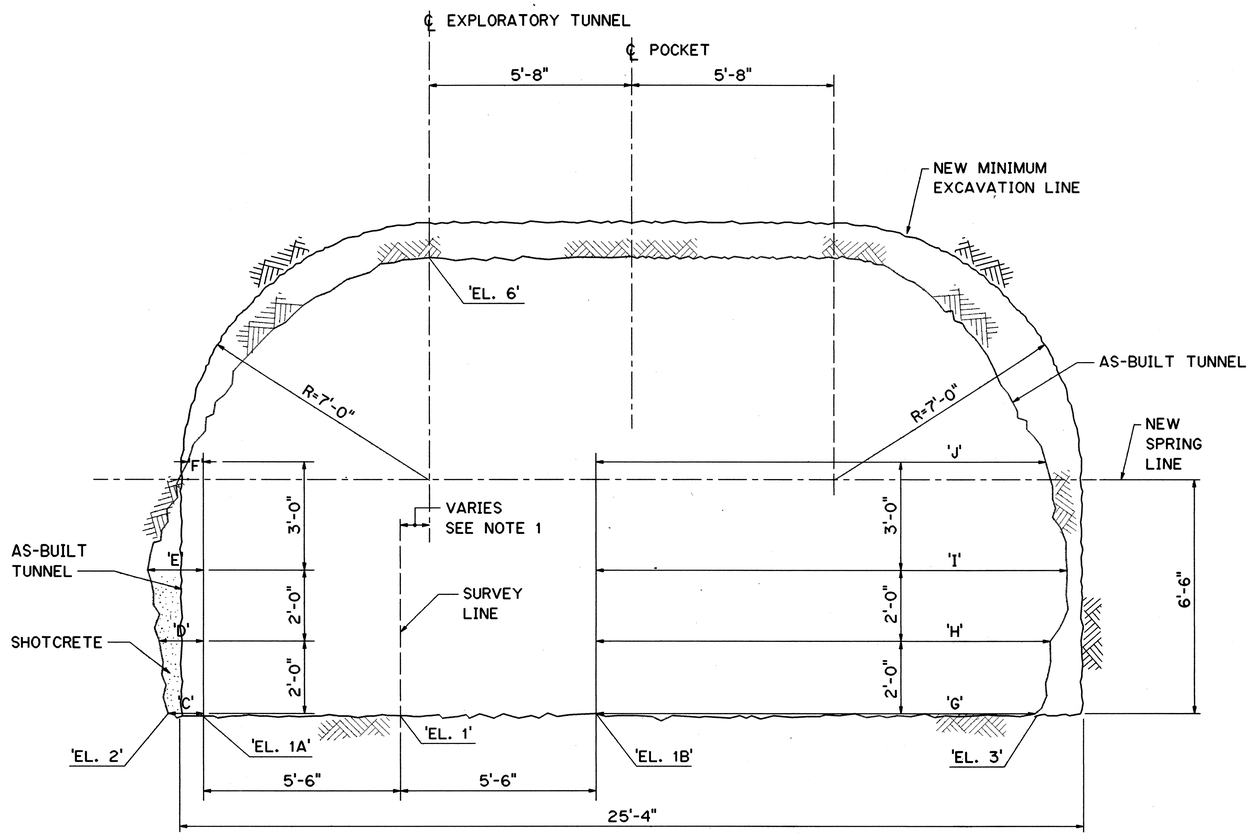

SECTION AT PASSING POCKET NO. 2

STA. 43+12 TO 43+93 (RIGHT SIDE)

AS-BUILT DATA SCHEDULE

STA.	EL. 1	EL. 1A	EL. 1B	EL. 2	EL. 3	EL. 6	C	D	E	F	G	H	I	J
43+10	926.53	925.35	926.46	926.23	926.79	939.81	0.45	1.05	1.77	1.45	3.22	3.40	3.20	3.18
43+20	925.53	925.35	925.81	925.35	926.38	940.09	0.95	1.50	1.50	1.60	5.20	6.40	7.68	8.45
43+30	924.83	924.90	924.84	924.90	925.18	939.48	0.20	1.13	0.97	0.80	13.05	13.00	12.86	11.85
43+40	924.06	924.16	924.17	924.39	924.56	938.60	1.20	2.20	1.98	1.15	12.91	13.25	13.32	11.80
43+50	923.21	923.13	923.53	923.13	923.34	938.02	1.00	1.25	1.57	0.35	12.30	12.72	13.20	12.60
43+60	922.41	922.08	922.72	922.08	922.74	935.78	1.10	1.20	1.23	0.65	10.35	11.32	12.10	11.97
43+70	921.75	921.38	921.88	921.38	922.25	934.16	0.55	0.96	1.10	0.30	8.40	8.77	10.00	8.00
43+80	920.94	920.47	921.15	920.47	921.23	933.89	0.68	1.12	0.98	1.40	6.87	6.87	6.89	5.90
43+90	920.20	919.88	920.50	919.94	920.60	923.61	1.05	1.45	0.93	0.75	4.42	4.73	4.54	4.11
44+00	919.55	919.28	919.90	919.32	919.88	932.46	0.97	1.30	1.80	1.40	2.35	2.70	3.45	3.15

ORIGINAL PLAN

NOTE BOOK NO.

SURVEY PLOTTED BY A. KORBMACHER DATE JAN 95
DRAWN BY " " "
TRACED BY " " "
DESIGNED BY D. OYENUGA JAN 95
QUANTITIES BY " " "
CHECKED BY G. BOYCE JAN 95

GRAPHIC SCALE

2' 1' 0' 2' 4'

½" = 1'-0"

THIS WORK WAS PREPARED BY ME OR UNDER MY SUPERVISION

Clayton S. Mimura

CLAYTON S. MIMURA LICENSED PROFESSIONAL ENGINEER No.4176-C HAWAII, U.S.A.

DATE	REVISION

STATE OF HAWAII
DEPARTMENT OF TRANSPORTATION
HIGHWAYS DIVISION

PASSING POCKET NO. 2 CONNECTION

EXPLORATORY TUNNEL IMPROVEMENTS

H-3 FINISH (UNIT III)

FAIP NO. I-H3-1(75), UNIT III

T.K. TUNNEL/ACCESS ROADS

SCALE ½" = 1'-0" DATE: JUN 1995

SHEET NO. 2F9 OF 13 SHEETS

FED. ROAD DIST. NO.	STATE	FED. AID PROJ. NO.	FISCAL YEAR	SHEET NO.	TOTAL SHEETS
HAWAII	HAW.	I-H3-1(75) UNIT III	1994	41	353

NOTE:

SEE SHT. NO. 2F8 FOR NOTES.

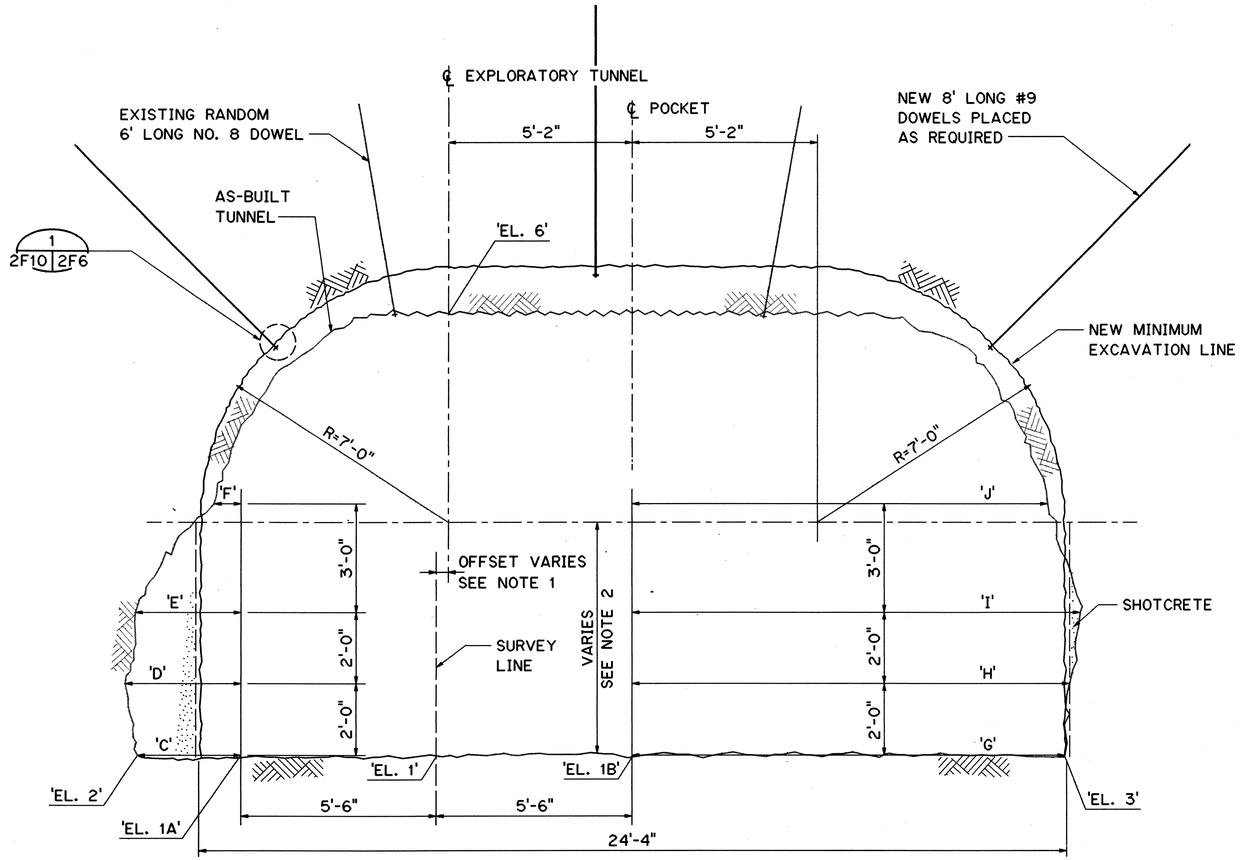

SECTION AT PASSING POCKET NO. 3

STA. 52+90 TO 54+00 (RIGHT SIDE)

AS-BUILT DATA SCHEDULE

STA.	EL. 1	EL. 1A	EL. 1B	EL. 2	EL. 3	EL. 6	C	D	E	F	G	H	I	J
52+90	865.24	865.18	865.35	865.55	865.53	880.91	1.90	2.10	3.08	2.70	11.14	11.17	11.60	10.44
53+00	864.82	864.85	864.88	865.23	865.12	881.32	0.98	1.88	3.20	2.70	10.85	11.27	11.45	11.04
53+10	864.28	864.27	864.43	864.44	864.71	879.56	1.34	2.39	2.89	1.97	12.30	13.20	12.62	11.49
53+20	863.90	863.81	863.01	863.87	864.40	879.20	1.94	2.20	2.16	1.74	12.36	12.36	12.23	11.28
53+30	863.64	863.66	863.64	863.76	864.02	878.10	0.10	1.81	2.18	2.22	11.20	11.64	11.35	10.24
53+40	863.32	863.20	863.31	863.20	863.63	878.77	0.22	1.38	2.30	1.85	11.68	12.20	11.69	12.40
53+50	862.93	862.73	862.82	862.83	863.21	878.48	1.70	2.05	1.77	0.75	12.12	12.25	12.55	11.65
53+60	862.25	861.98	862.17	862.14	862.93	877.84	1.58	2.30	2.57	1.45	10.97	11.35	11.80	11.17
53+70	861.58	861.22	861.63	861.30	862.48	875.62	1.14	2.14	2.01	2.60	10.42	11.37	11.74	11.65
53+80	860.83	860.67	860.96	860.95	861.74	875.63	1.40	1.70	1.70	1.90	9.01	9.55	9.65	10.14
53+90	860.05	859.68	860.31	859.68	861.11	875.02	0.40	1.24	1.55	3.25	7.45	7.53	7.94	6.85
54+00	859.38	859.14	859.84	859.14	860.38	873.19	0.63	0.92	1.84	1.65	5.35	6.30	6.35	6.65

ORIGINAL PLAN			DATE
	SURVEY PLOTTED BY	A. KORBMACHER	JAN 95
	DRAWN BY	" " " "	
NOTE BOOK	TRACED BY	D. OYENUGA	JAN 95
	DESIGNED BY	" " " "	
	QUANTITIES BY	G. BOYCE	JAN 95
NO.	CHECKED BY	" " " "	

GRAPHIC SCALE

2' 1' 0' 2' 4'

½" = 1'-0"

CLAYTON S. MIMURA LICENSED PROFESSIONAL ENGINEER No.4176-C HAWAII, U.S.A.

THIS WORK WAS PREPARED BY ME OR UNDER MY SUPERVISION

Clayton S. Mimura

DATE	REVISION

STATE OF HAWAII
DEPARTMENT OF TRANSPORTATION
HIGHWAYS DIVISION

PASSING POCKET NO. 3 CONNECTION

EXPLORATORY TUNNEL IMPROVEMENTS
H-3 FINISH (UNIT III)
FAIP NO. I-H3-1(75), UNIT III
T.K. TUNNEL/ACCESS ROADS

SCALE: 1/2" = 1'-0" DATE: JUN 1995

SHEET NO. 2F10 OF 13 SHEETS

KORBMACHER ELWOOD::2410:IDWG.GEOJGE025.FG871 01FEB95-13.47.00

FED. ROAD DIST. NO.	STATE	FED. AID PROJ. NO.	FISCAL YEAR	SHEET NO.	TOTAL SHEETS
HAWAII	HAW.	I-H3-1(75) UNIT III	1994	42	353

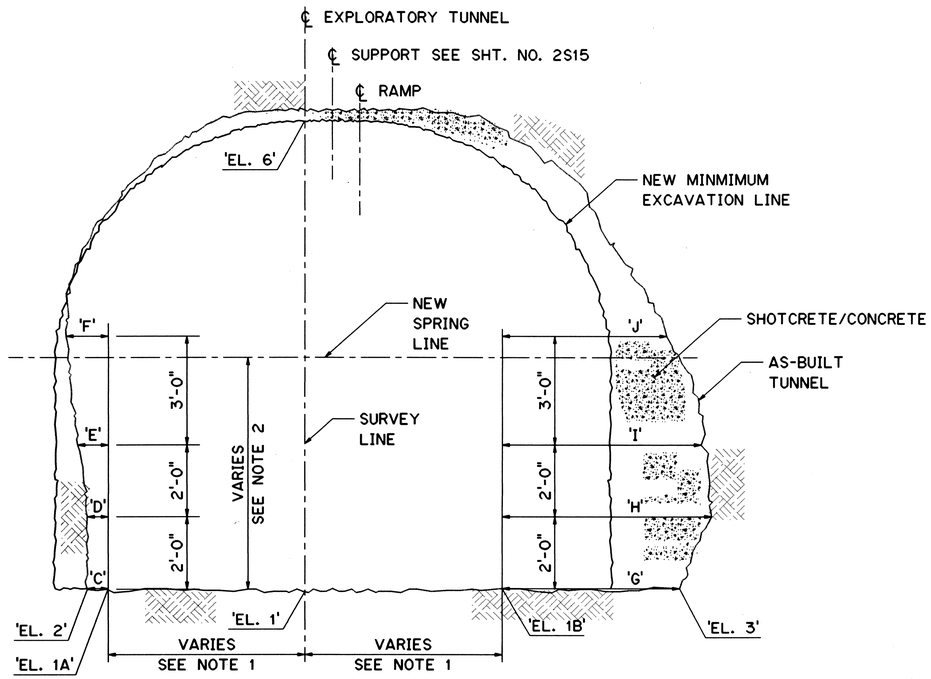

Y-INTERSECTION

STA. 13+40 TO 13+70

AS-BUILT DATA SCHEDULE

STA.	EL. 1	EL. 1A	EL. 2	EL. 1B	EL. 3	EL. 6	A	B	C	D	E	F	G	H	I	J
13+40	1011.38	1011.80	1011.80	1011.53	1011.53	1024.84	N/S	N/S	0.00	0.61	0.81	0.85	0.29	1.16	1.56	1.24
13+43	1011.18	1011.82	1011.82	1011.56	1011.68	1025.02	N/S	N/S	0.00	0.53	0.80	0.69	0.86	1.48	1.58	1.29
13+50	1011.43	1011.68	1011.68	1011.55	1011.82	1025.51	N/S	N/S	0.00	0.59	0.86	1.19	5.00	5.90	5.61	4.64
13+60	1011.69	1011.72	1011.72	1011.68	1012.53	1025.05	N/S	N/S	0.00	0.91	1.41	1.68	N/F	N/F	N/F	N/F
13+70	1011.74	1011.80	1011.80	1011.70	N/F	1025.61	N/S	N/S	0.00	0.74	1.31	1.40	0.15	0.95	1.63	1.90

NOTE:

SEE SHT. NO. 2F8 FOR NOTES.

LEGEND:

N/S = NO SWALE IN TUNNEL

N/F = DATA NOT SURVEYED

ORIGINAL PLAN		DATE
SURVEY PLOTTED BY		
DRAWN BY	A. KORBMACHER	JAN 95
TRACED BY		
DESIGNED BY	D. OYENUGA	JAN 95
QUANTITIES BY		
CHECKED BY	G. BOYCE	JAN 95
NOTE BOOK		
NO.		

GRAPHIC SCALE

2' 1' 0' 2' 4'

½" = 1'-0"

THIS WORK WAS PREPARED BY ME OR UNDER MY SUPERVISION

CLAYTON S. MIMURA LICENSED PROFESSIONAL ENGINEER No.4176-C HAWAII, U.S.A.

DATE	REVISION

STATE OF HAWAII
DEPARTMENT OF TRANSPORTATION
HIGHWAYS DIVISION

Y-INTERSECTION AT EXPLORATORY TUNNEL RAMP

EXPLORATORY TUNNEL IMPROVEMENTS
H-3 FINISH (UNIT III)
FAIP NO. I-H3-1(75), UNIT III
T.K. TUNNEL/ACCESS ROADS

SCALE: 1/2" = 1'-0" DATE: JUN 1995

SHEET NO. 2F11 OF 13 SHEETS

42

HERNANDEZ ELWOOD:::2410:DWG.GEOJGE024.FGB/T 24MAY95-08.41.30

FED. ROAD DIST. NO.	STATE	FED. AID PROJ. NO.	FISCAL YEAR	SHEET NO.	TOTAL SHEETS
HAWAII	HAW.	I-H3-1(75) UNIT III	1994	43	353

AS-BUILT DATA SCHEDULE (TYPE C TUNNEL)

STA.	EL. 1	EL. 1A	EL. 1B	EL. 2	EL. 3	EL. 6	A	B	C	D	E	F	G	H	I	J
10+90	1006.04	1006.28	1006.13	1006.70	1006.13	1019.79	N/S	N/S	1.16	1.22	1.60	1.55	0.50	1.11	1.50	1.61
11+00	1006.62	1006.95	1006.88	1007.06	1006.88	1020.46	3.20	0.00	1.19	1.72	2.26	1.95	0.44	1.03	1.61	1.42
11+10	1006.71	1007.27	1007.35	1007.48	1007.35	1020.60	3.00	0.60	1.08	1.56	1.89	1.98	0.28	0.71	1.27	1.56
11+20	1006.95	1007.53	1007.60	1007.69	1007.60	1020.85	3.00	0.70	0.98	1.84	2.15	2.18	0.10	0.81	1.42	1.45
11+30	1006.89	1007.77	1007.76	1007.86	1007.76	1021.30	2.80	0.70	0.86	1.34	1.71	1.90	0.38	1.15	1.37	1.13
11+40	1007.44	1008.14	1008.29	1008.19	1008.29	1021.56	2.20	1.00	0.94	1.35	1.88	1.70	0.15	0.77	0.78	0.73
11+50	1007.87	1008.65	1008.68	1008.71	1008.68	1022.03	2.20	1.00	0.66	1.18	1.41	1.14	0.91	1.25	1.29	1.23
11+60	1008.25	1008.85	1008.93	1008.92	1008.99	1022.24	1.60	1.50	0.70	1.05	1.06	0.90	0.95	1.34	1.60	1.40
11+70	1008.61	1009.32	1009.22	1009.35	1009.26	1022.77	2.30	1.00	1.10	1.27	1.26	0.97	1.20	1.42	1.55	1.63
11+80	1008.94	1009.58	1009.52	1009.58	1009.52	1022.88	1.80	1.00	0.44	0.95	1.04	0.66	0.77	1.00	1.39	1.44
11+90	1009.31	1009.71	1009.86	1009.71	1009.86	1023.26	1.50	1.50	0.51	1.08	1.34	0.80	0.79	1.52	1.65	1.27
12+00	1009.59	1010.16	1010.33	1010.16	1010.33	1023.39	1.40	1.60	0.31	0.65	0.74	0.63	1.10	1.32	1.43	1.37
12+10	1010.16	1010.76	1010.56	1010.76	1010.56	1023.80	1.40	1.60	0.60	1.26	1.18	0.79	1.14	1.56	1.73	1.57
12+20	1010.37	1010.99	1010.95	1010.99	1010.95	1024.11	1.50	1.60	0.25	0.60	0.49	0.25	1.18	1.60	1.61	1.38
12+30	1010.61	1011.21	1011.07	1011.21	1011.07	1023.98	1.30	1.70	0.34	0.80	0.95	0.59	1.26	1.22	1.39	1.20
12+35	1010.66	1011.25	1011.09	1011.25	1011.39	1024.08	1.40	1.60	0.15	0.64	1.11	0.83	7.80	7.83	7.92	7.60
12+40	1010.67	1011.30	1011.15	1011.30	1011.32	1023.98	1.80	1.50	0.26	0.68	0.88	0.64	8.49	8.55	8.26	7.34
12+43	1010.77	1011.33	1011.18	1011.33	1011.34	1023.78	1.30	1.40	0.29	0.70	0.94	0.58	7.90	7.81	7.82	7.64
12+50	1010.73	1011.26	1011.26	1011.26	1011.26	1024.37	1.00	1.20	0.75	1.10	1.11	0.62	1.15	1.57	1.75	1.40
12+60	1010.97	1011.40	1011.46	1011.41	1011.44	1024.58	1.80	1.10	0.76	1.24	1.39	1.13	0.93	1.33	1.56	1.22
12+70	1010.95	1011.55	1011.58	1011.59	1011.61	1024.48	1.80	1.80	0.79	1.11	1.14	0.84	1.72	1.91	1.96	1.48
12+77	1010.93	1011.64	1011.56	1011.64	1011.63	1024.40	1.01	1.58	0.00	0.62	0.82	0.71	0.79	1.30	1.73	1.54
12+80	1011.02	1011.63	1011.54	1011.63	1011.56	1024.55	1.20	1.60	0.00	0.44	0.64	0.73	0.63	1.36	1.87	1.76
12+90	1010.91	1011.78	1011.59	1011.78	1011.63	1025.06	1.20	1.55	0.00	0.64	1.00	0.71	0.70	1.43	1.64	1.01
13+00	1011.06	1011.66	1011.58	1011.06	1011.62	1025.88	1.40	1.55	0.00	0.55	0.81	0.85	0.65	1.25	1.62	1.68
13+10	1011.04	1011.72	1011.66	1011.72	1011.75	1025.05	1.30	1.70	0.00	0.53	0.77	0.58	0.84	1.33	1.44	1.22
13+20	1011.02	1011.67	1011.61	1011.67	1011.65	1025.00	1.50	1.45	0.10	0.73	0.88	0.65	0.57	1.28	1.71	1.54
13+30	1011.54	1012.10	1011.73	1012.10	1011.77	1024.76	N/S	N/S	0.00	0.19	0.68	0.65	0.53	1.50	1.69	1.65
13+40	1011.38	1011.80	1011.53	1011.80	1011.53	1024.84	N/S	N/S	0.00	0.61	0.81	0.85	0.29	1.16	1.56	1.24
13+43	1011.18	1011.82	1011.56	1011.82	1011.68	1025.02	N/S	N/S	0.00	0.53	0.80	0.69	0.86	1.48	1.58	1.29
13+50	1011.43	1011.68	1011.55	1011.68	1011.82	1025.51	N/S	N/S	0.00	0.59	0.86	1.19	5.00	5.90	5.61	4.64
13+60	1011.69	1011.72	1011.68	1011.72	1012.53	1025.05	N/S	N/S	0.00	0.91	1.41	1.68	N/F	N/F	N/F	N/F
13+70	1011.74	1011.80	1011.70	1011.80	N/F	1025.61	N/S	N/S	0.00	0.74	1.31	1.40	0.15	0.95	1.63	1.90
13+80	1011.79	1011.82	1011.79	1011.82	N/F	1024.85	N/S	N/S	0.00	0.51	0.90	1.09	0.10	1.01	1.45	1.68
13+90	1011.85	1011.87	1011.94	1011.87	N/F	1024.52	N/S	N/S	0.00	0.48	0.76	0.82	0.00	0.82	1.16	1.35
14+00	1011.88	1012.16	1012.10	1012.16	N/F	1024.58	N/S	N/S	0.00	0.44	0.62	0.62	0.30	0.97	1.18	0.92
14+10	1011.82	1012.02	1012.06	1012.01	1012.06	1025.18	N/S	N/S	0.56	1.04	1.33	1.20	0.41	0.82	0.91	0.80
14+20	1011.64	1011.90	1011.65	1012.02	1011.79	1024.95	N/S	N/S	0.44	0.73	0.71	0.69	1.35	1.69	2.04	2.02
14+30	1011.61	1012.06	1011.67	1012.23	1011.80	1025.30	N/S	N/S	0.90	0.82	1.00	0.93	1.60	2.09	2.38	2.54
14+40	1011.96	1012.22	1011.78	1012.22	1011.90	1025.70	N/S	N/S	0.00	0.67	0.87	0.95	1.10	1.88	2.27	2.21
14+50	1012.02	1012.51	1011.85	1012.51	1011.93	1026.24	N/S	N/S	0.00	0.61	0.93	0.88	1.54	2.49	2.75	2.84
14+60	1012.26	1012.72	1011.97	1012.72	1012.03	1027.14	N/S	N/S	0.15	0.23	0.41	0.46	1.88	2.41	2.76	3.00
14+70	1012.24	1012.79	1011.91	1012.79	1011.93	1025.87	N/S	N/S	0.00	0.58	0.68	0.70	2.02	2.27	2.43	2.41
14+80	1012.15	1012.62	1012.93	1012.76	1011.97	1025.75	N/S	N/S	0.46	0.83	0.87	0.72	2.16	2.27	2.17	2.18
14+90	1012.22	1012.66	1012.03	1012.66	1012.23	1025.97	N/S	N/S	0.00	0.15	0.47	0.36	1.60	2.05	2.25	2.35

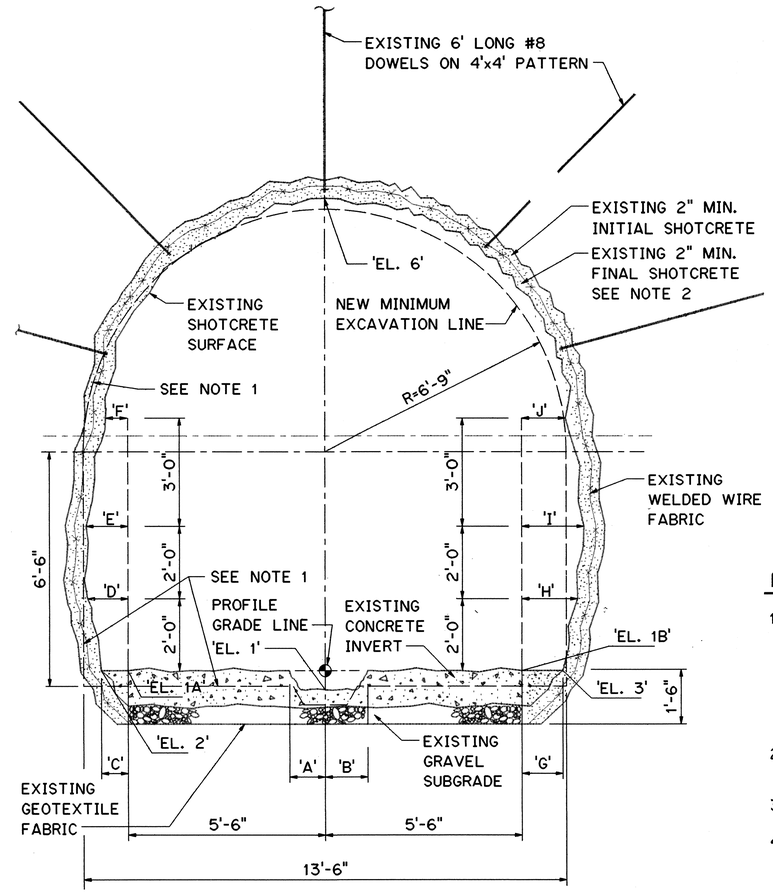

TYPICAL SECTION TYPE C TUNNEL

STA. 10+68 TO STA. 14+88

NOTES:

1. CONTRACTOR SHALL TRIM TUNNEL AND REMOVE EXISTING CONCRETE INVERT IN PORTIONS OF THE EXPLORATORY TUNNEL WITH GROUND SUPPORT TYPE C, IN ACCORDANCE WITH SHT. NO. 2F7 AND THE SPECIFICATIONS.
2. EXISTING SHOTCRETE THICKNESS VARIES, BUT IS GREATER THAN 4 INCHES.
3. N/S INDICATES NO SWALE IN TUNNEL.
4. N/F INDICATES DATA NOT SURVEYED.

DATE	REVISION

STATE OF HAWAII
DEPARTMENT OF TRANSPORTATION
HIGHWAYS DIVISION

EXISTING GROUND SUPPORT TYPE C TUNNEL

EXPLORATORY TUNNEL IMPROVEMENTS
H-3 FINISH (UNIT III)
FAIP NO. I-H3-1(75), UNIT III
T.K. TUNNEL/ACCESS ROADS

SCALE: 1/2" = 1'-0" DATE: JUN 1995

SHEET NO. 2F12 OF 13 SHEETS

GRAPHIC SCALE
2' 1' 0' 2' 4'
½" = 1'-0"

CLAYTON S. MINAGA LICENSED PROFESSIONAL ENGINEER No.4176-C HAWAII, U.S.A.

THIS WORK WAS PREPARED BY ME OR UNDER MY SUPERVISION

Clayton S Minaga

ORIGINAL PLAN		DATE
SURVEY PLOTTED BY	A. KORBMACHER	JAN 95
DRAWN BY	"	"
TRACED BY	"	"
DESIGNED BY	D. OYENUGA	JAN 95
QUANTITIES BY	"	"
CHECKED BY	G. BOYCE	JAN 95
NOTE BOOK NO.		

HERNANDEZ ELWOOD!!!2410!!DWG.GEOJGE027.FGB71 17MAY95-09.11.20

FED. ROAD DIST. NO.	STATE	FED. AID PROJ. NO.	FISCAL YEAR	SHEET NO.	TOTAL SHEETS
HAWAII	HAW.	I-H3-1(75) UNIT III	1994	44	353

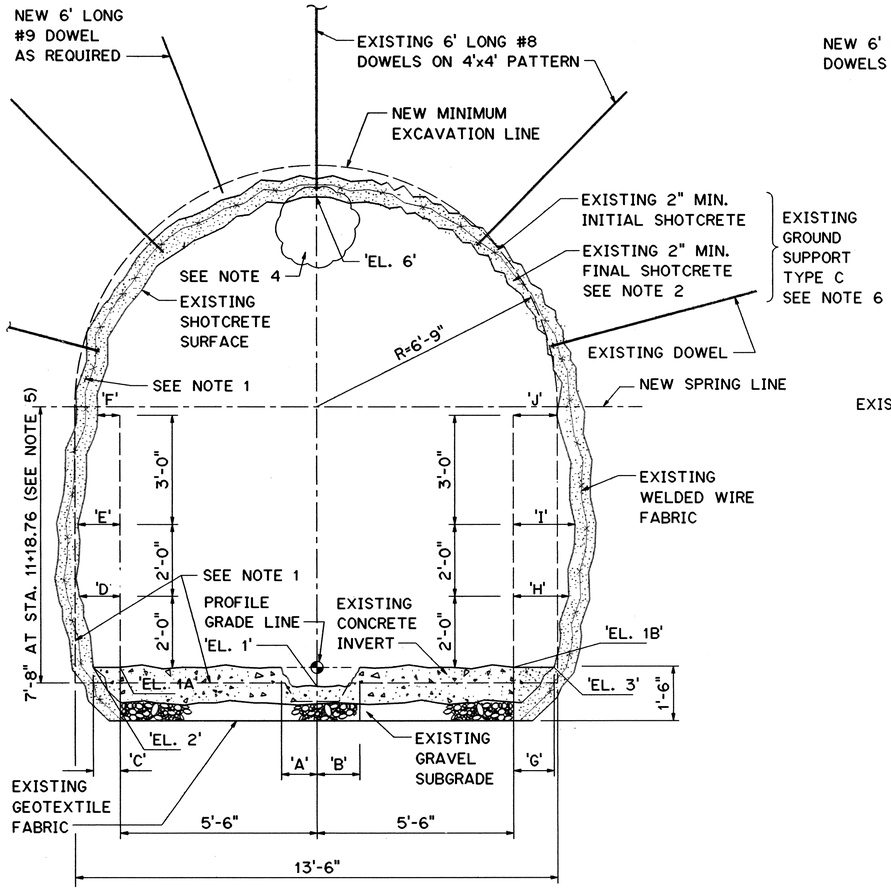

TYPICAL SECTION
HALAWA FAN ENLARGEMENT
STA. 11+12.76 TO STA. 11+24.76

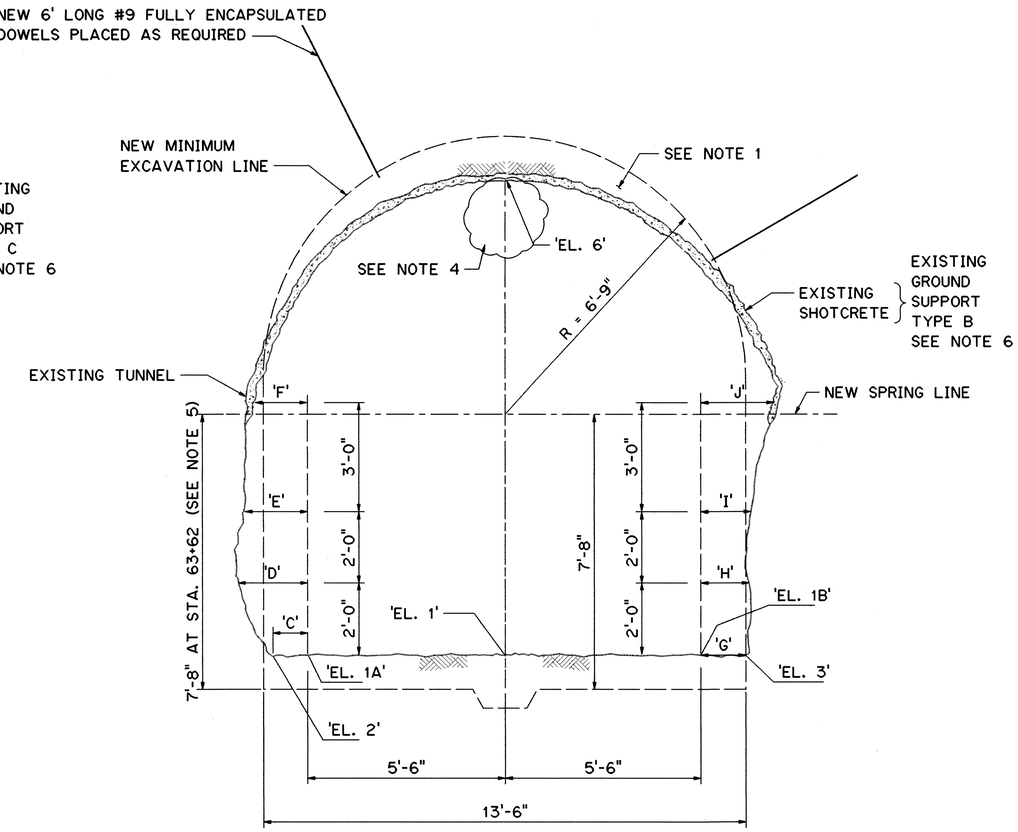

TYPICAL SECTION
HAIKU FAN ENLARGEMENT
STA. 63+56.00 TO STA. 63+68.00

NOTES:

1. CONTRACTOR SHALL TRIM TUNNEL AS REQUIRED, TO NEW DESIGN LINE FOR THE FAN ENLARGEMENT AT HALAWA AND HAIKU. CONTRACTOR SHALL REMOVE EXISTING CONCRETE INVERT IN PORTIONS OF THE EXPLORATORY TUNNEL WITH GROUND SUPPORT TYPE C, IN ACCORDANCE WITH SHEET NO. 2F7 AND THE SPECIFICATIONS.
2. EXISTING SHOTCRETE THICKNESS VARIES, BUT IS GREATER THAN 4 INCHES.
3. N/S INDICATES NO SWALE IN TUNNEL.
4. SEE SHT. NO. 2M8, FOR FAN LOCATION
5. SEE SHT. NO. 2S14, SECTION C FOR FAN ENLARGEMENT GEOMETRY ALONG GCL
6. GROUND SUPPORT SELECTION FOR THE EXISTING EXPLORATORY TUNNEL WAS MADE IN THE HEADING DURING CONSTRUCTION AND CONSISTS OF THE FOLLOWING TYPES:
   - TYPE A - NO SUPPORT
   - TYPE B - CROWN SHOTCRETE AND DOWELS
   - TYPE C - FULL-PERIMETER SHOTCRETE AND DOWELS

AS-BUILT DATA SCHEDULE

STA.	EL. 1	EL. 1A	EL. 1B	EL. 2	EL. 3	EL. 6	A	B	C	D	E	F	G	H	I	J
HALAWA																
11+00	1006.62	1006.95	1006.88	1007.06	1006.88	1020.46	3.20	0.00	1.19	1.72	2.26	1.95	0.44	1.03	1.61	1.42
11+10	1006.71	1007.27	1007.35	1007.48	1007.35	1020.60	3.00	0.60	1.08	1.56	1.89	1.98	0.28	0.71	1.27	1.56
11+20	1006.95	1007.53	1007.60	1007.69	1007.60	1020.85	3.00	0.70	0.98	1.84	2.15	2.18	0.10	0.81	1.42	1.45
11+30	1006.89	1007.77	1007.76	1007.86	1007.76	1021.30	2.80	0.70	0.86	1.34	1.71	1.90	0.38	1.15	1.37	1.13
HAIKU																
63+50	815.87	815.85	816.22	816.43	817.08	829.81	N/S	N/S	1.45	2.34	2.45	1.89	0.56	1.34	1.78	1.70
63+60	815.61	815.68	815.87	816.52	816.07	829.04	N/S	N/S	1.08	2.02	1.77	1.69	1.32	1.24	1.50	2.17
63+70	815.53	815.40	815.58	815.73	816.15	830.16	N/S	N/S	0.90	1.05	0.82	0.82	2.05	2.19	2.20	2.24

ORIGINAL PLAN		DATE
	SURVEY PLOTTED BY	
	DRAWN BY A. KORBMACHER	JAN 95
NOTE BOOK	TRACED BY	
	DESIGNED BY D. OYENUGA	JAN 95
NO.	QUANTITIES BY	
	CHECKED BY G. BOYCE	JAN 95

CLAYTON S. MIMURA LICENSED PROFESSIONAL ENGINEER No.4176-C HAWAII, U.S.A.

THIS WORK WAS PREPARED BY ME OR UNDER MY SUPERVISION

Clayton S. Mimura

DATE	REVISION

STATE OF HAWAII
DEPARTMENT OF TRANSPORTATION
HIGHWAYS DIVISION

HALAWA AND HAIKU FAN ENLARGEMENT

EXPLORATORY TUNNEL IMPROVEMENTS
H-3 FINISH (UNIT III)
FAIP NO. I-H3-1(75), UNIT III
T.K. TUNNEL/ACCESS ROADS

SCALE: 1" = 10' DATE: JUN 1995

SHEET NO. 2F13 OF 13 SHEETS

HERNANDEZ ELWOOD:::2410:[DWG.GEOJGE023.FGB]1 16MAY95-13.04.00

FED. ROAD DIST. NO.	STATE	FED. AID PROJ. NO.	FISCAL YEAR	SHEET NO.	TOTAL SHEETS
HAWAII	HAW.	I-H3-1(75) UNIT III	1994	45	353

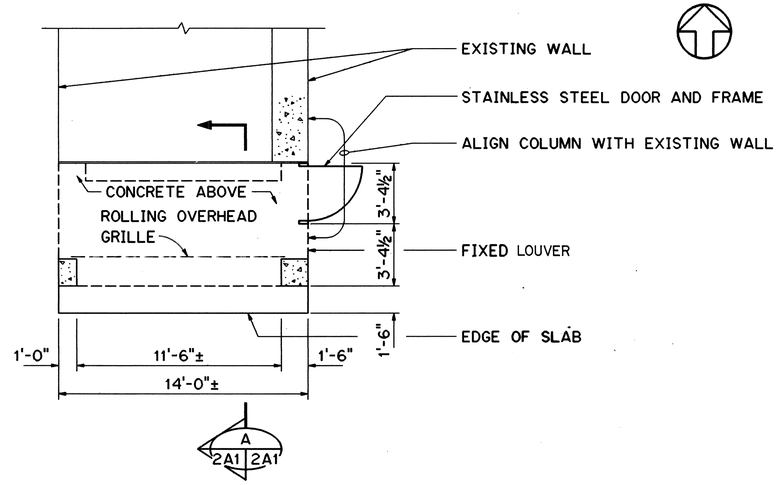

PLAN - HALAWA GATE (1 / - | -)
SCALE: ¼" = 1'-0"

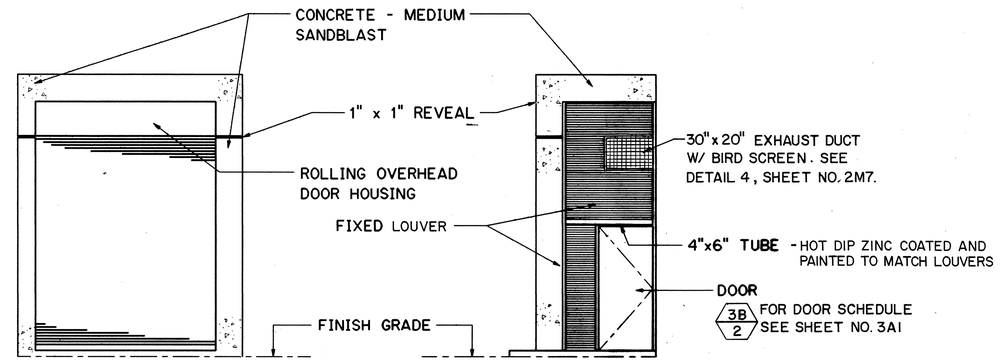

SOUTH ELEVATION - HALAWA GATE (2 / - | -)
SCALE: ¼" = 1'-0"

EAST ELEVATION - HALAWA GATE (3 / - | -)
SCALE: ¼" = 1'-0"

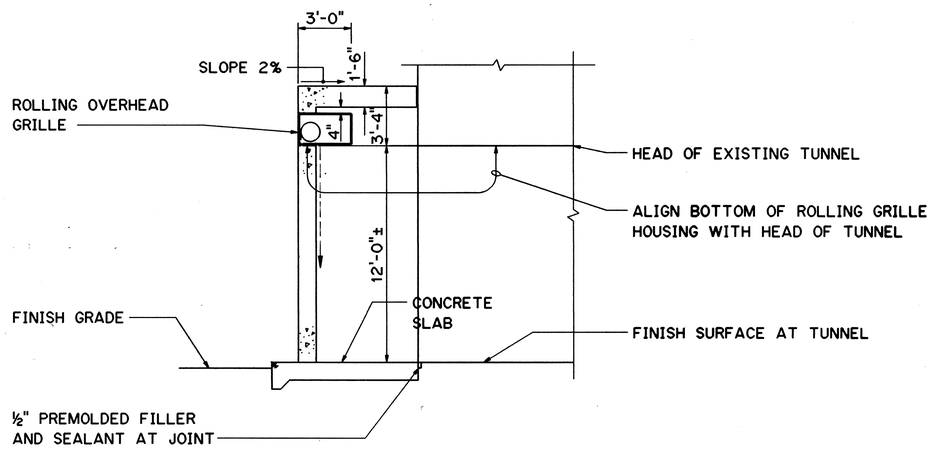

SECTION AT HALAWA (A / 2A1 | 2A1)
SCALE: ¼" = 1'-0"

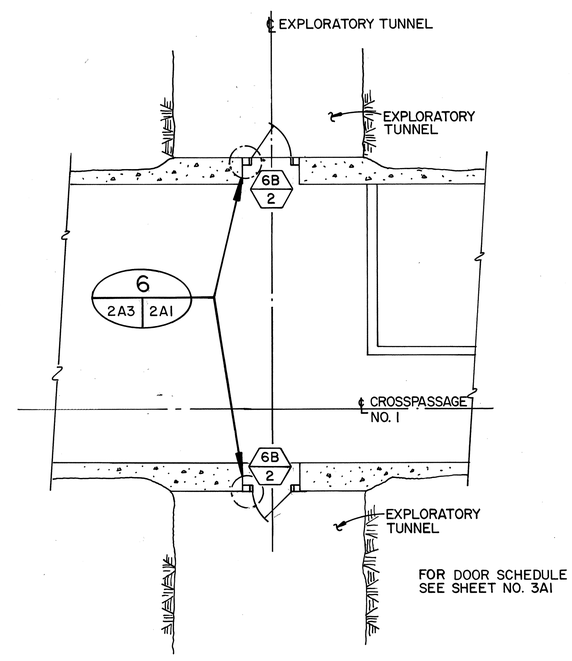

CROSSPASSAGE NO. 1 PLAN
SCALE: 3/16" = 1'-0"

GRAPHIC SCALES
1' 0 1' 5' 10'
3/16" = 1'-0"
4' 2' 0' 4' 8'
¼" = 1'-0"

FOR DETAIL AS-BUILT INFORMATION REFER TO CONSTRUCTION SUBMITTALS

DATE	REVISION
3/3/97	DCN 75-013: ADDED CROSSPASSAGE NO. 1 PLAN & DOORS TO EXPLORATORY TUNNEL
10/27/95	ADDENDUM 2 - REVISED FINISH NOTE FOR 4"x6" TUBE
10/13/95	ADDENDUM 1

STATE OF HAWAII
DEPARTMENT OF TRANSPORTATION
HIGHWAYS DIVISION

HALAWA GATE

EXPLORATORY TUNNEL IMPROVEMENTS
H-3 FINISH (UNIT III)
FAIP NO. I-H3-1(75), UNIT III
T.K. TUNNEL/ACCESS ROADS

SCALE: ¼" = 1'-0" DATE: JUN 1995

ROBERT HOWELL LICENSED PROFESSIONAL ARCHITECT No. 6697 HAWAII, U.S.A.

THIS WORK WAS PREPARED BY ME OR UNDER MY SUPERVISION

Robert Howell

SHEET NO. 2A1 OF 3 SHEETS

ORIGINAL PLAN			
NOTE BOOK	SURVEY PLOTTED BY	B. BUNYI	NOV 94
	DRAWN BY		
	TRACED BY		
	DESIGNED BY	C. FREY	NOV 94
	QUANTITIES BY		
	CHECKED BY	R. HOWELL	DEC 94
NO.			

BUNYI ELWOOD::2410:[DWG.ARCHJAR025.FGB71 01FEB95-11.15.30

ADD. 45

FED. ROAD DIST. NO.	STATE	FED. AID PROJ. NO.	FISCAL YEAR	SHEET NO.	TOTAL SHEETS
HAWAII	HAW.	I-H3-1(75) UNIT III	1994	46	353

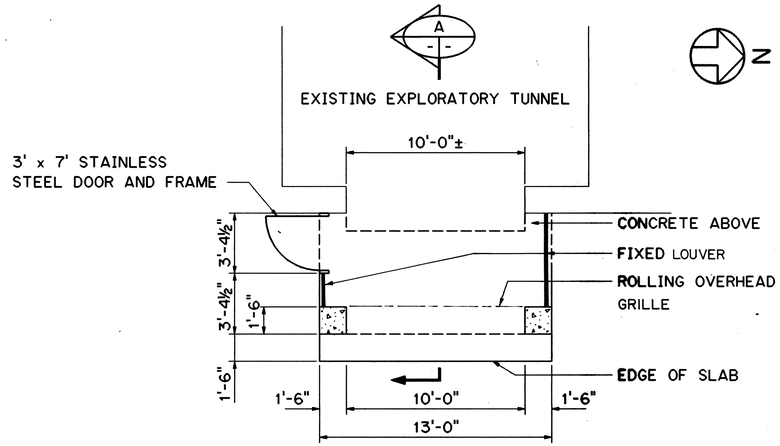

PLAN - HAIKU GATE (1)
SCALE: ¼" = 1'-0"

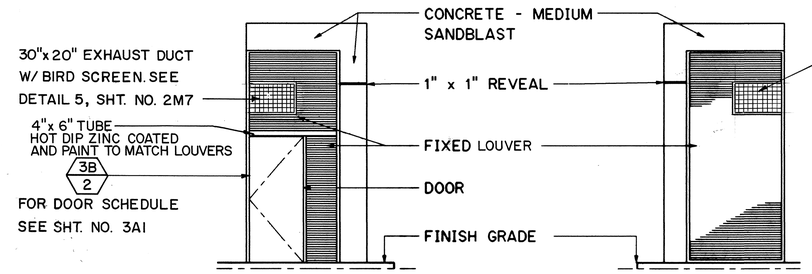

SOUTH ELEVATION - HAIKU GATE (2)
SCALE: ¼" = 1'-0"

NORTH ELEVATION - HAIKU GATE (3)
SCALE: ¼" = 1'-0"

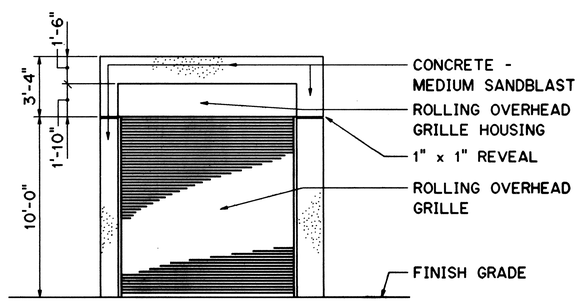

EAST ELEVATION - HAIKU GATE (4)
SCALE: ¼" = 1'-0"

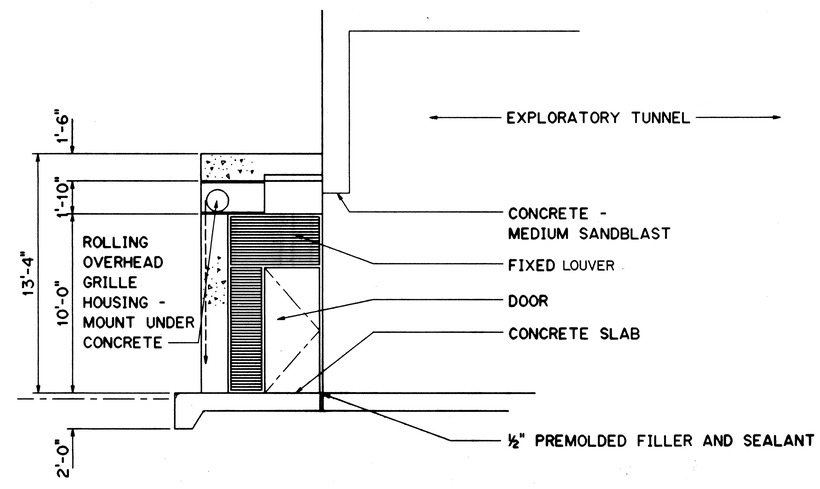

SECTION AT HAIKU GATE (A)
SCALE: ¼" = 1'-0"

GRAPHIC SCALE
4' 2' 0' 4' 8'
¼" = 1'-0"

ROBERT HOWELL LICENSED PROFESSIONAL ARCHITECT No. 6697 HAWAII, U.S.A.

THIS WORK WAS PREPARED BY ME OR UNDER MY SUPERVISION

Robert Howell

DATE	REVISION
10/27/95	ADDENDUM 2 - ADDED FINISH NOTE FOR 4"x6" TUBE
10/13/95	ADDENDUM 1

STATE OF HAWAII
DEPARTMENT OF TRANSPORTATION
HIGHWAYS DIVISION

HAIKU GATE

EXPLORATORY TUNNEL IMPROVEMENTS
H-3 FINISH (UNIT III)
FAIP NO. I-H3-1(75), UNIT III
T.K. TUNNEL/ACCESS ROADS

SCALE: ¼" = 1'-0" DATE: JUN 1995

SHEET NO. 2A2 OF 3 SHEETS

		DATE
ORIGINAL PLAN	SURVEY PLOTTED BY	
	DRAWN BY	B. BUNYI NOV 94
	TRACED BY	
NOTE BOOK	DESIGNED BY	C. FREY NOV 94
	QUANTITIES BY	
NO.	CHECKED BY	B. HOWELL DEC 94

HERNANDEZ ELWOOD::2410:[DWG.ARCHJAR026.FGB71 01FEB95-11.13.30

ADD. 46

FED. ROAD DIST. NO.	STATE	FED. AID PROJ. NO.	FISCAL YEAR	SHEET NO.	TOTAL SHEETS
HAWAII	HAW.	I-H3-1(75) UNIT III	1994	47	353

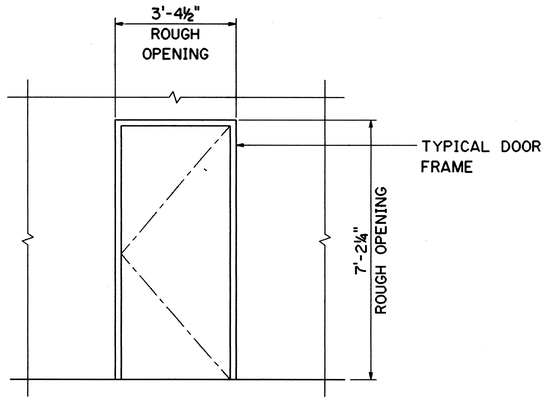

ELEVATION 1 / - | -
SCALE: ½" = 1'-0"

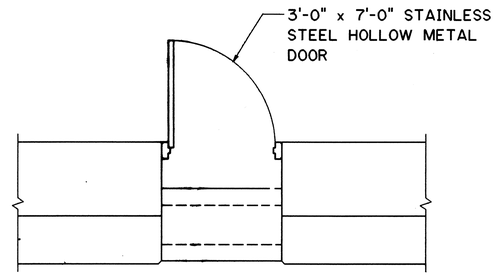

PLAN

DETAIL 2 / - | -
SCALE: ½" = 1'-0"

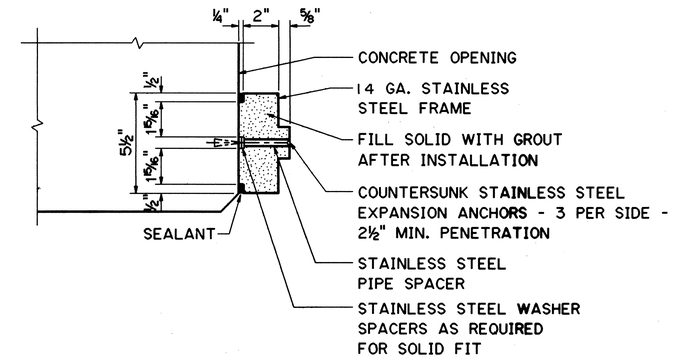

PLAN - TYPICAL DOOR JAMB

DETAIL 3 / - | -
SCALE: 3" = 1'-0"

NOTES:

1. FOR DOOR IDENTIFICATION AND LOCATION, SEE SHT. NOS. 2S6 THRU 2S10.
2. INSTALL ONE 12" x 12" LOUVER EACH, BOTTOM OF LOUVER TO BE 12" ABOVE BOTTOM OF DOOR AT DOORS 14B/3 AND 10B/2.

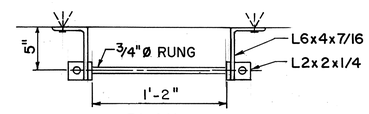

PLAN

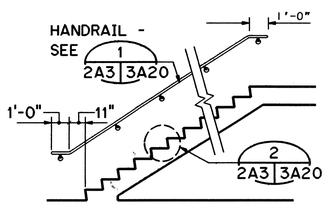

TYPICAL HANDRAIL AT STAIRS

EXPLORATORY TUNNEL TO CROSSPASSAGE CONNECTIONS

DETAIL 4 / 2S6 | 2A3
SCALE: 3" = 1'-0"
2S7
2S8
2S9
2S10

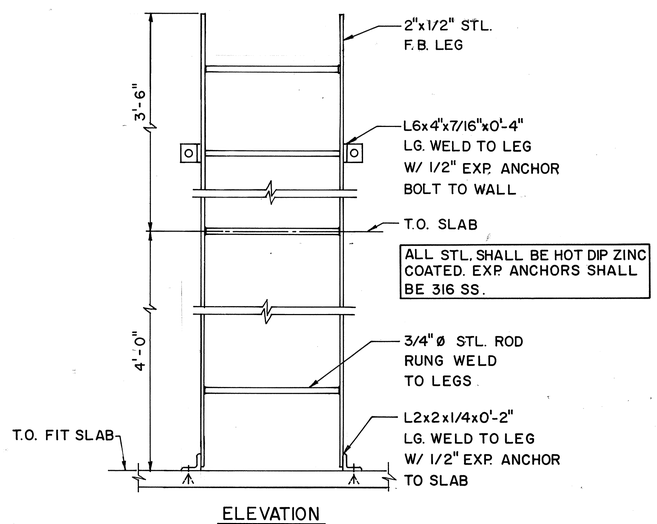

ELEVATION

PIT LADDER DETAIL 5 / 2S6 | 2A3
SCALE: 1 1/2" = 1'-0"
2S7
2S8
2S9
2S10, 3S18, 3A13

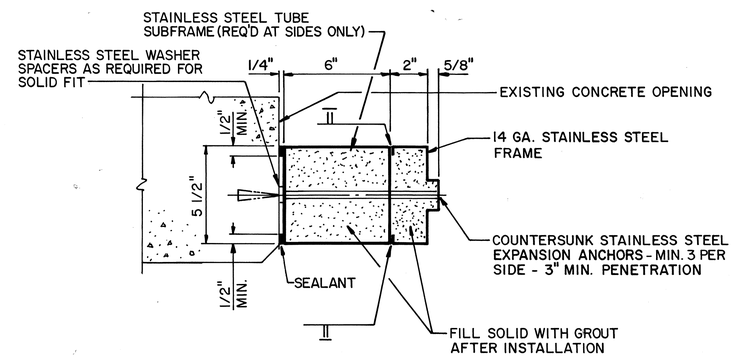

NOTE: FOR FRAME AT TOP OF DOOR SEE DETAIL 3, THIS SHEET

DOOR JAMB WITH SUBFRAME

DETAIL 6 / 2A3 | 2A1
SCALE: 3" = 1'-0"

GRAPHIC SCALES

1' 0'
3" = 1'-0"

2' 1' 0' 2' 4'
½" = 1'-0"

ROBERT HOWELL LICENSED PROFESSIONAL ARCHITECT No. 6657 HAWAII, U.S.A.

THIS WORK WAS PREPARED BY ME OR UNDER MY SUPERVISION

Robert Howell

DATE	REVISION
3/3/97	DCN 75-013: ADDED DETAIL 6
10/13/95	ADDENDUM I

STATE OF HAWAII
DEPARTMENT OF TRANSPORTATION
HIGHWAYS DIVISION

DOOR & RAILING DETAILS

EXPLORATORY TUNNEL IMPROVEMENTS
H-3 FINISH (UNIT III)
FAIP NO. I-H3-1(75), UNIT III
T.K. TUNNEL/ACCESS ROADS

SCALE: ¼" = 1'-0" DATE: JUN 1995

SHEET NO. 2A3 OF 3 SHEETS

ORIGINAL PLANS		DATE
SURVEY PLOTTED BY		
DRAWN BY	B. BUNYI	NOV 94
TRACED BY		
DESIGNED BY	C. FREY	NOV 94
QUANTITIES		
CHECKED BY	R. HOWELL	DEC 94
NOTE BOOK		
NO.		

BUNYI ELWOOD::2410:IDWG.ARCHJAR027.PGB71 01FEB95-18.47.10

ADD.47

FED. ROAD DIST. NO.	STATE	FED. AID PROJ. NO.	FISCAL YEAR	SHEET NO.	TOTAL SHEETS
HAWAII	HAW.	I-H3-1(75) UNIT III	1994	48	353

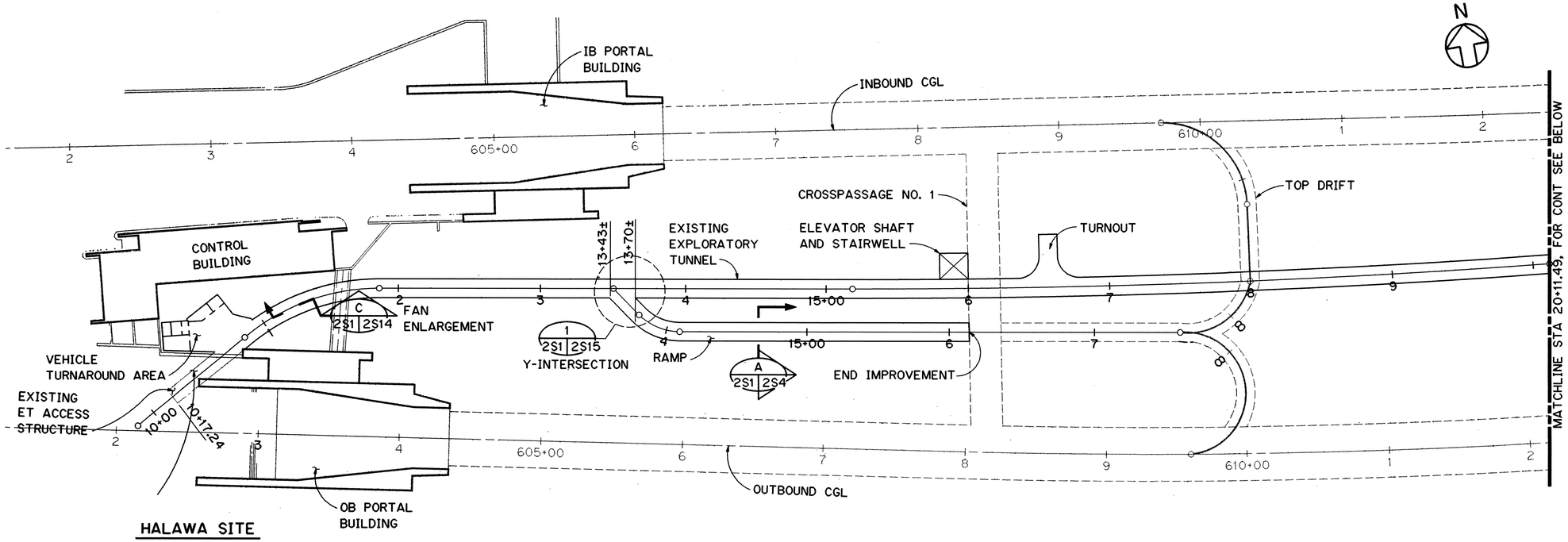

HALAWA SITE

NOTES:

1. FOR GENERAL STRUCTURAL NOTES, SEE SHEET NO. 2S4.
2. FOR TUNNEL ALIGNMENT AND PROFILE, SEE CIVIL PLANS.
3. FOR PLAN AND SECTIONS AT THE PASSING POCKET, SEE SHEET NO. 2S5.
4. FOR PLAN AND SECTIONS AT THE TURNOUTS, SEE SHEET NO. 2S14.
5. FOR DETAIL AT ELECTRICAL NICHE, SEE SHEET NO. 2S13. FOR LOCATION OF NICHES, SEE ELECTRICAL PLANS.
6. FOR LOCATION OF TURNOUTS AND FAN ENLARGEMENTS SEE GEOTECHNICAL PLANS.

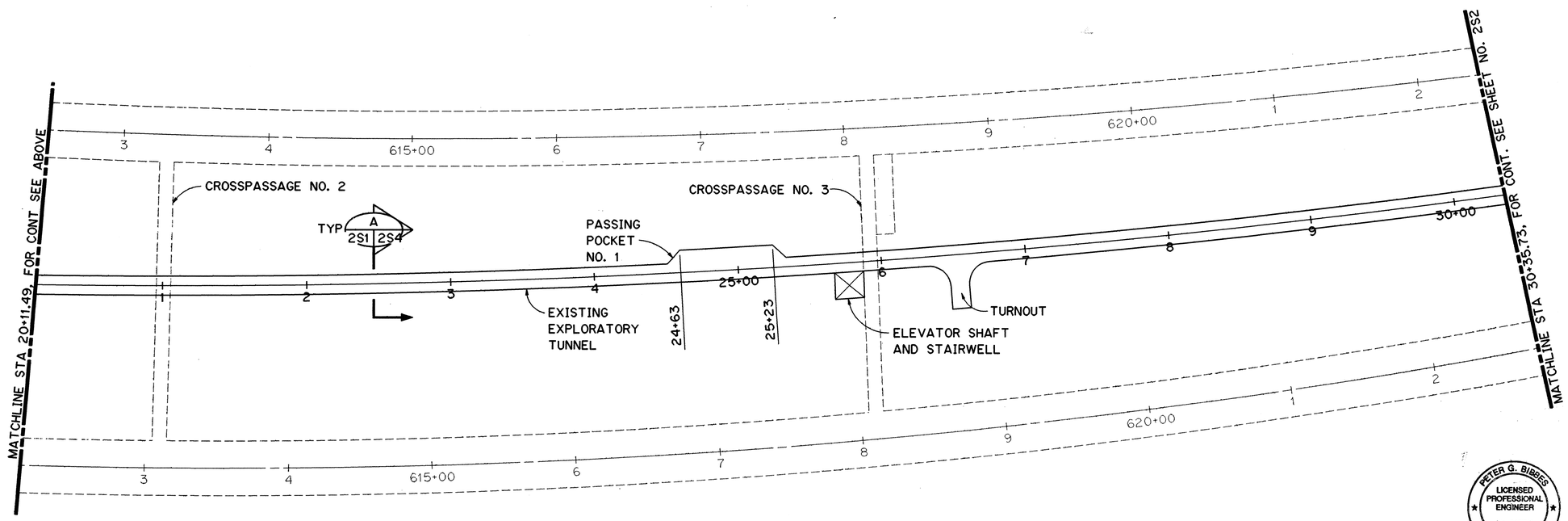

PARTIAL PLAN - EXPLORATORY TUNNEL

GRAPHIC SCALE
40' 0' 40' 80'
1" = 40'

FOR DETAIL AS-BUILT INFORMATION REFER TO CONSTRUCTION SUBMITTALS

DATE	REVISION

PETER G. BIBBES LICENSED PROFESSIONAL ENGINEER No. 6467-S HAWAII, U.S.A.

THIS WORK WAS PREPARED BY ME OR UNDER MY SUPERVISION

STATE OF HAWAII
DEPARTMENT OF TRANSPORTATION
HIGHWAYS DIVISION

GENERAL PLAN - 1

EXPLORATORY TUNNEL IMPROVEMENTS
H-3 FINISH (UNIT III)
FAIP NO. I-H3-1(75), UNIT III
T.K. TUNNEL/ACCESS ROADS

SCALE: 1" = 40' DATE: JUN 1995

SHEET NO. 2S1 OF 17 SHEETS

48

ORIGINAL PLAN		DATE
	SURVEY PLOTTED BY	
	DRAWN BY R. HERNANDEZ	NOV 94
NOTE BOOK	TRACED BY	"
	DESIGNED BY M.S. ONYANG	NOV 94
	QUANTITIES BY	"
NO.	CHECKED BY G. BENKOVICH	DEC 94

HERNANDEZ ELWOOD::2410:[DWG.STRUCT]STOT8.FGB;1 30JAN95-10.33.50

FED. ROAD DIST. NO.	STATE	FED. AID PROJ. NO.	FISCAL YEAR	SHEET NO.	TOTAL SHEETS
HAWAII	HAW.	I-H3-1(75) UNIT III	1994	49	353

N

NOTES:

1. FOR NOTES, SEE SHEET NO. 2S1.

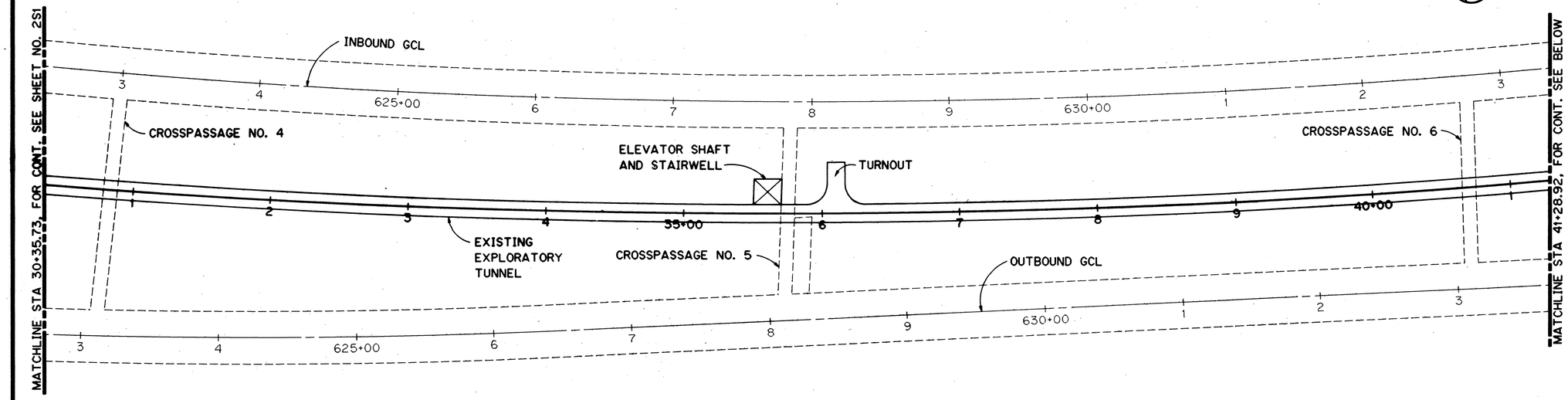

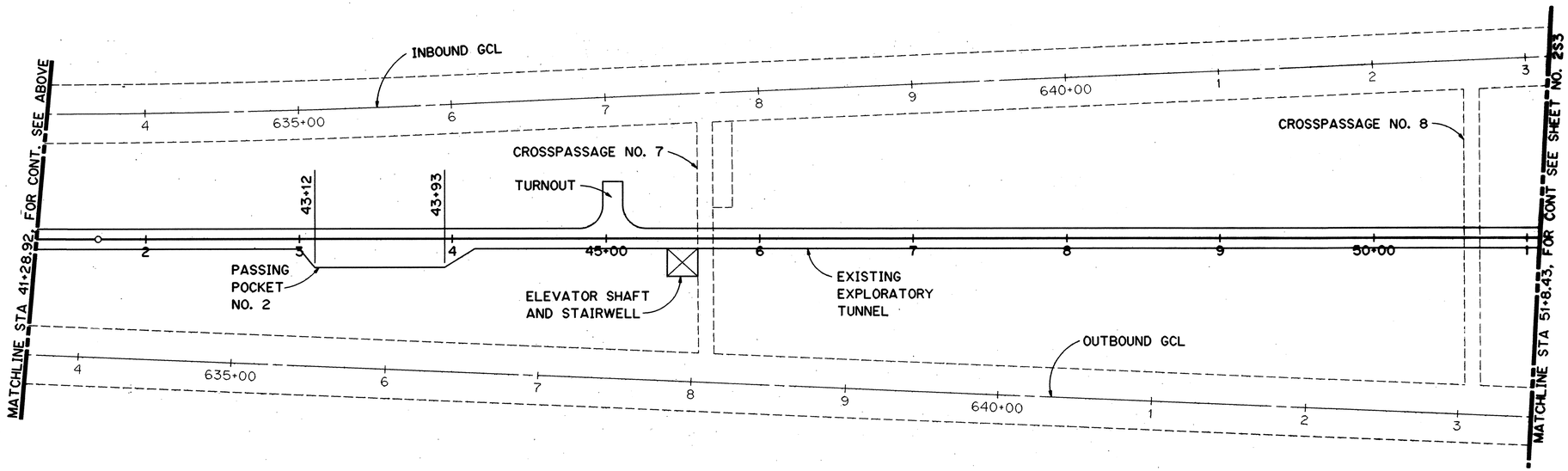

PARTIAL PLAN - EXPLORATORY TUNNEL

GRAPHIC SCALE
40' 0' 40' 80'
1" = 40'

PETER G. BIBBES
LICENSED PROFESSIONAL ENGINEER
No. 6467-S
HAWAII, U.S.A.

THIS WORK WAS PREPARED BY ME OR UNDER MY SUPERVISION

Peter G. Bibbes

DATE	REVISION

STATE OF HAWAII
DEPARTMENT OF TRANSPORTATION
HIGHWAYS DIVISION

GENERAL PLAN - 2

EXPLORATORY TUNNEL IMPROVEMENTS
H-3 FINISH (UNIT III)
FAIP NO. I-H3-1(75), UNIT III
T.K. TUNNEL/ACCESS ROADS

SCALE: 1" = 40' DATE: JUN 1995

SHEET NO. 2S2 OF 17 SHEETS

		DATE
ORIGINAL PLAN	SURVEY PLOTTED BY	
	TRACED BY R. HERNANDEZ	NOV 94
	DESIGNED BY	" "
NOTE BOOK	TRACED BY	NOV 94
	DESIGNED BY M.S. OWYANG	" "
NO.	QUANTITIES BY	
	CHECKED BY G. BENKOVICH	DEC 94

HERNANDEZ ELWOOD::2410:[DWG.STRUCT]ST1019.FGB71 28JAN95-09.40.10

FED. ROAD DIST. NO.	STATE	FED. AID PROJ. NO.	FISCAL YEAR	SHEET NO.	TOTAL SHEETS
HAWAII	HAW.	I-H3-1(75) UNIT III	1994	50	353

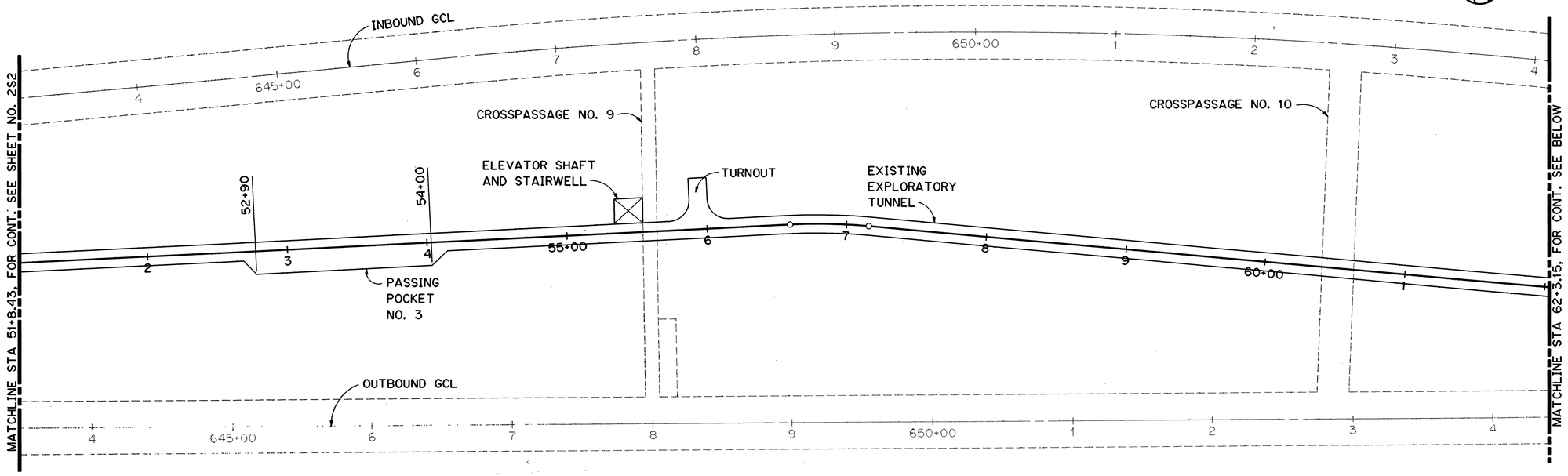

NOTES:

1. FOR NOTES, SEE SHEET NO. 2S1.

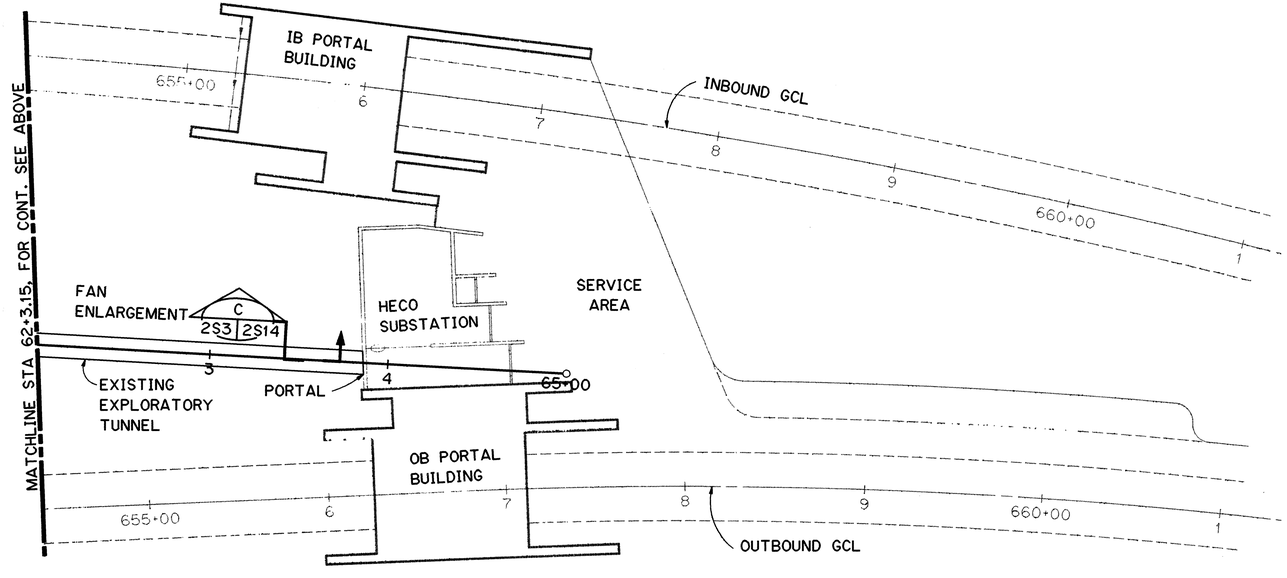

HAIKU SITE

PARTIAL PLAN - EXPLORATORY TUNNEL

GRAPHIC SCALE
40' 0' 40' 80'
1" = 40'

PETER G. BIBBES
LICENSED PROFESSIONAL ENGINEER
No. 6467-S
HAWAII, U.S.A.

THIS WORK WAS PREPARED BY ME OR UNDER MY SUPERVISION

ORIGINAL PLAN	SURVEY PLOTTED BY	DATE
	DRAWN BY R. HERNANDEZ	NOV 94
NOTE BOOK	TRACED BY	
	DESIGNED BY M.S. OWYANG	NOV 94
NO.	QUANTITIES BY	
	CHECKED BY G. BENKOVICH	DEC 94

DATE	REVISION

STATE OF HAWAII
DEPARTMENT OF TRANSPORTATION
HIGHWAYS DIVISION

GENERAL PLAN - 3

EXPLORATORY TUNNEL IMPROVEMENTS
H-3 FINISH (UNIT III)
FAIP NO. I-H3-1(75), UNIT III
T.K. TUNNEL/ACCESS ROADS

SCALE: 1" = 40' DATE: JUN 1995

SHEET NO. 2S3 OF 17 SHEETS

HERNANDEZ ELWOOD:: 2410:(DWG.STRUCT)ST020.FGB71 28JAN95-09.49.50

FED. ROAD DIST. NO.	STATE	FED. AID PROJ. NO.	FISCAL YEAR	SHEET NO.	TOTAL SHEETS
HAWAII	HAW.	I-H3-1(75) UNIT III	1994	51	353

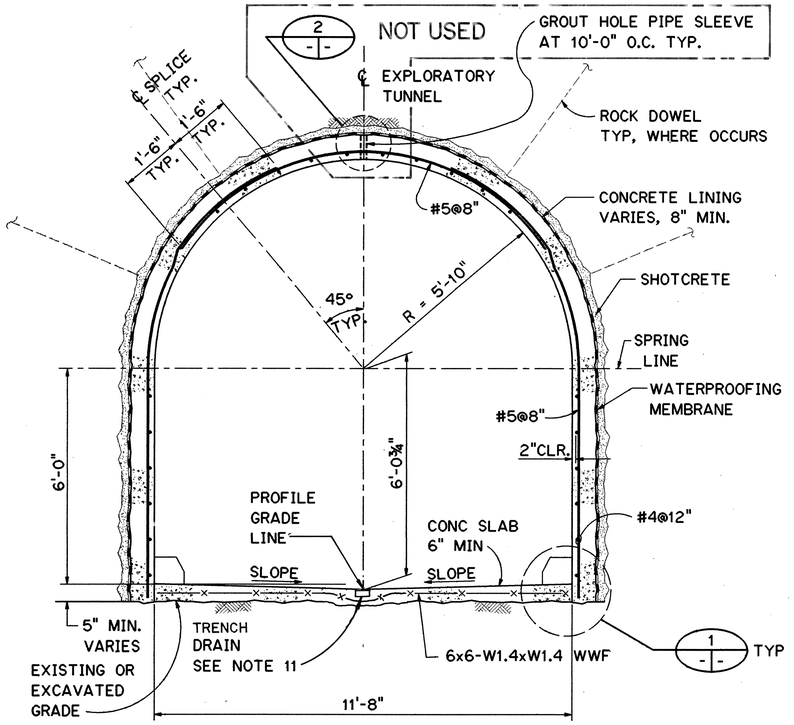

TYPICAL TUNNEL SECTION A

SCALE: ½"-1'-0"

2S1 | 2S4
2S15
2S14

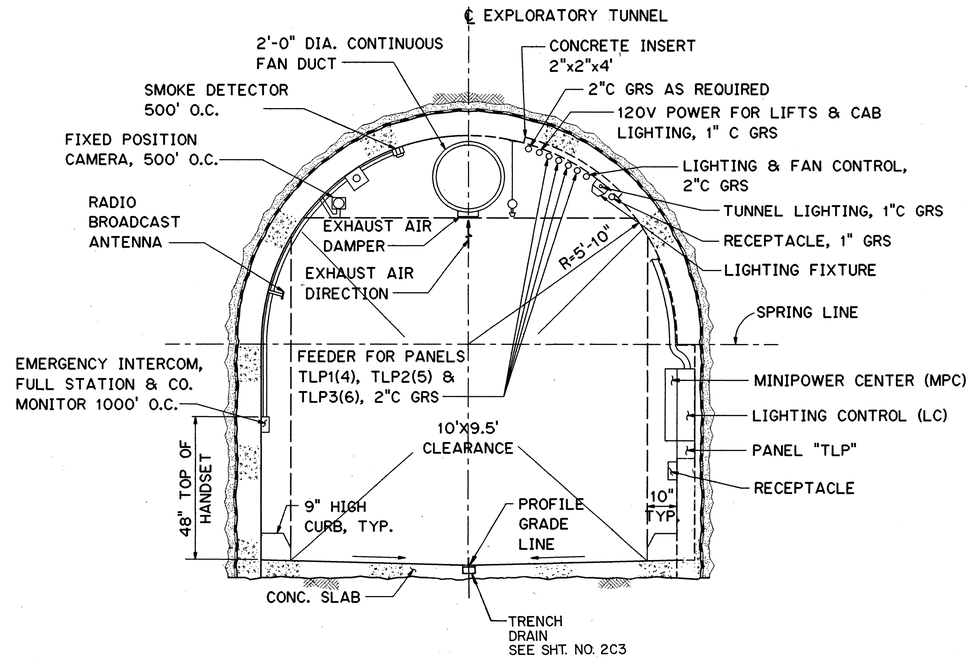

TYPICAL FIXTURE ARRANGEMENT

SCALE: ½"=1'-0"

NOTES:

1. CONCRETE COPMPESSIVE STRENGTH @ 28 DAYS SHALL BE 3000 PSI, CLASS A NORMAL WEIGHT.
2. REINFORCING STEEL SHALL CONFORM TO ASTM A615 (AASHTO M31), GRADE 60 DEFORMED BARS (fy=60 KSI).
3. WELDED WIRE FABRICS (W.W.F.) SHALL CONFORM TO ASTM A185 FOR SMOOTH WIRES AND ASTM A497 FOR DEFORMED WIRES.
4. ALL REINFORCING STEEL HOOKS AND CONCRETE COVERS SHALL CONFORM TO ACI 318-89 REQUIREMENTS UNLESS NOTED OTHERWISE.
5. ALL REINFORCING STEEL LAP SPLICE LENGTHS SHALL BE CLASS "B" AS DEFINED BY ACI 318-89 UNLESS OTHERWISE NOTED.
6. PRIOR TO PLACING CONCRETE, VERIFY PLACEMENT OF CONDUITS AND OTHER EMBEDDED ITEMS SHOWN ON OTHER PLANS.
7. TUNNEL LINING IS DESIGNED FOR THE FOLLOWING LOADS:
   A. DEAD LOAD (SELF WEIGHT)
   B. GROUT PRESSURE - 15 PSI MAXIMUM
8. GROUT PIPES AND ACCESSORIES SHALL BE HOT DIPPED GALVANIZED.
9. PLUG GROUT PIPE WITH THREADED PLUG AFTER GROUTING.
10. PROVIDE CONTROL JOINTS IN CONCRETE SLAB AT 20'-0" O.C., MAXIMUM. SEE 3 / -|-
11. TRENCH DRAIN IS NOT REQUIRED AT RAMP OR TURNOUTS.

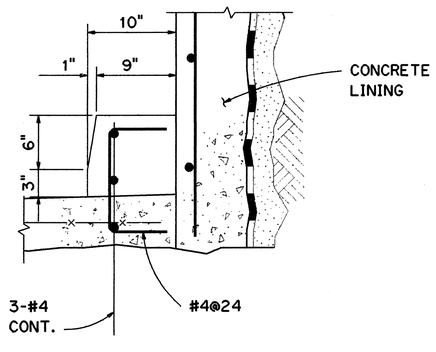

TYPICAL CURB DETAIL

DETAIL 1
SCALE: 1½" = 1'-0"
2S5 | 2S4
2S14
2S15

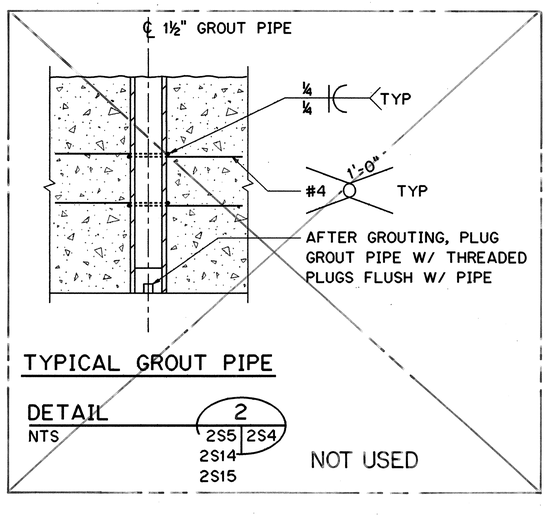

TYPICAL GROUT PIPE

DETAIL 2
NTS
2S5 | 2S4
2S14
2S15

NOT USED

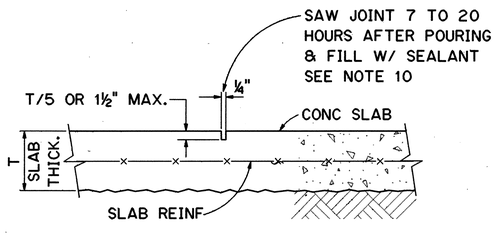

TYPICAL CONTROL JOINT

DETAIL 3
NTS

GRAPHIC SCALE
2' 1' 0' 2' 4'
½" = 1'-0"
1' 0' 1'
1½" = 1'-0"

PETER Q. BIBBES LICENSED PROFESSIONAL ENGINEER No. 6467-S HAWAII, U.S.A.

THIS WORK WAS PREPARED BY ME OR UNDER MY SUPERVISION

DATE	REVISION
8/21/96	DCN 75-007: REV. ET DRAIN
4/18/96	DCN 75-001: CLARIFICATION OF 'PROFILE GRADE LINE' LOCATION PER RESPONSE TO RFI NO. 4097-17, REV. 1

STATE OF HAWAII
DEPARTMENT OF TRANSPORTATION
HIGHWAYS DIVISION

TYPICAL TUNNEL SECTIONS

EXPLORATORY TUNNEL IMPROVEMENTS
H-3 FINISH (UNIT III)
FAIP NO. I-H3-1(75), UNIT III
T.K. TUNNEL/ACCESS ROADS

SCALE: AS NOTED DATE: JUN 1995

SHEET NO. 2S4 OF 17 SHEETS

ORIGINAL PLAN		DATE
	SURVEY PLOTTED BY R. HERNANDEZ	NOV 94
	DRAWN BY	"
NOTE BOOK	TRACED BY L. JOHNSON	NOV 94
	DESIGNED BY	"
NO.	QUANTITIES BY	"
	CHECKED BY G. BENKOVICH	DEC 94

HERNANDEZ ELWOOD::2410:IDWG.STRUCTJST015.FGB71 28JAN95-10.01.40

FED. ROAD DIST. NO.	STATE	FED. AID PROJ. NO.	FISCAL YEAR	SHEET NO.	TOTAL SHEETS
HAWAII	HAW.	I-H3-1(75) UNIT III	1994	52	353

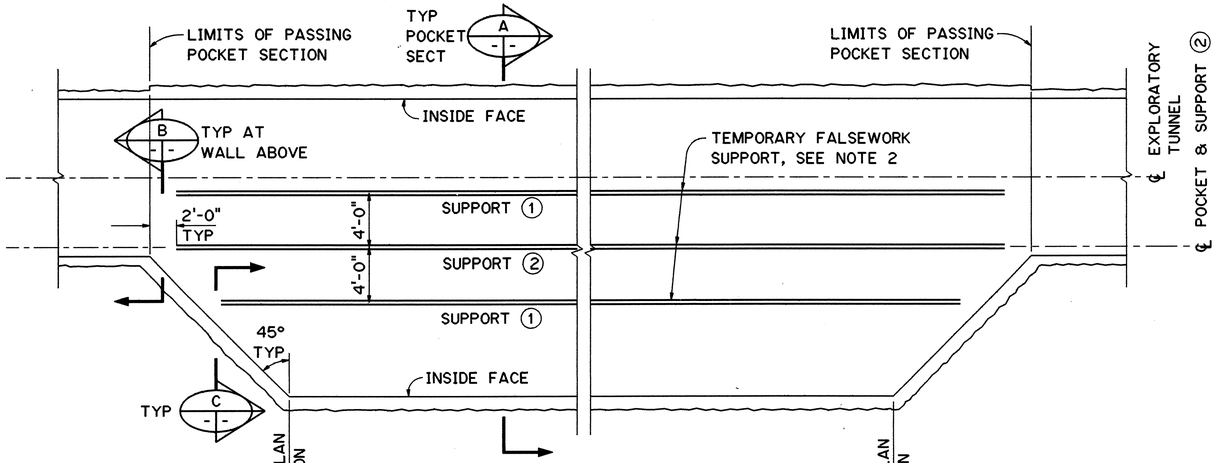

PASSING POCKET PLAN

SCALE: 3/16"=1'-0"

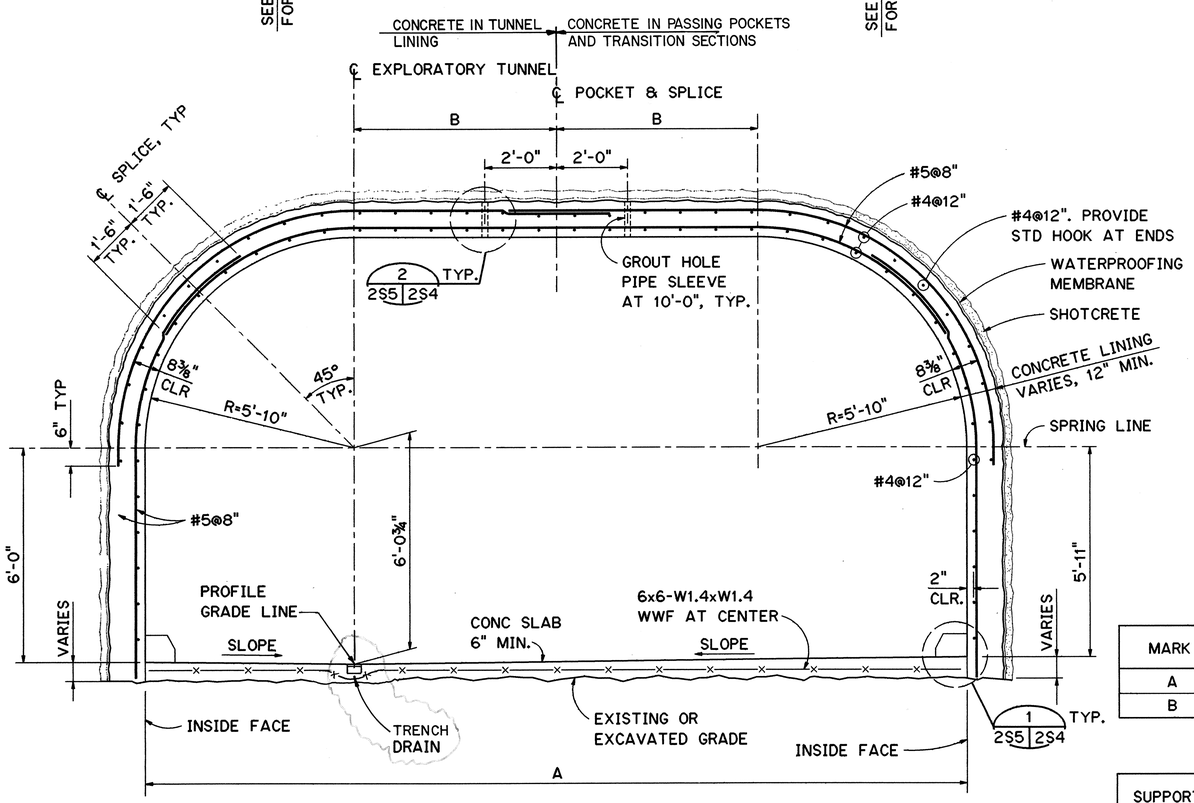

SECTION AT PASSING POCKETS NO. 2 AND NO. 3
SECTION AT PASSING POCKET NO. 1 IS OPPOSITE HAND

SECTION A
SCALE: 1/2"=1'-0"

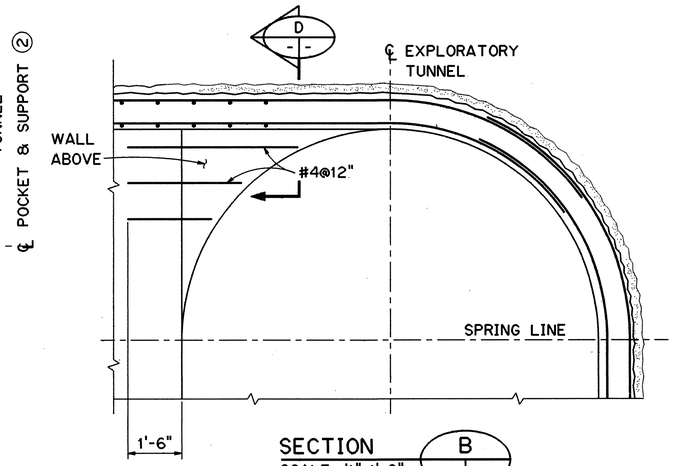

SECTION B
SCALE: 1/2"=1'-0"

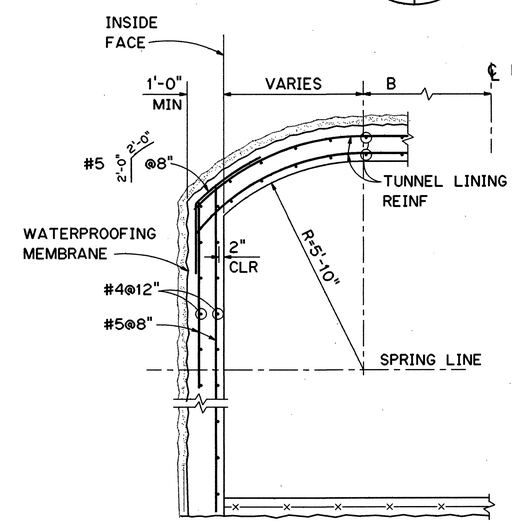

SECTION C
SCALE: 1/2"=1'-0"

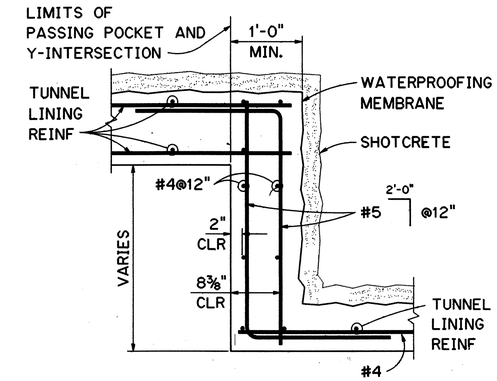

SECTION D
SCALE: 1"=1'-0"
2S15 2S5

NOTES:

1. FOR ADDITIONAL NOTES, SEE SHEET NO. 2S4.
2. PROVIDE TEMPORARY FALSEWORK SUPPORT OF THE LINING DURING THE GROUTING OPERATION. THE SUPPORTS SHALL BE DESIGNED BY THE CONTRACTOR TO RESIST THE SERVICE LOADS SHOWN IN TABLE B.
3. THE ALLOWABLE BEARING PRESSURE AT THE PASSING POCKETS IS 20,000 PSF.

TABLE A

MARK	PASSING POCKET NO. 1	PASSING POCKET NO. 2	PASSING POCKET NO. 3
A	20'-0"	23'-0"	22'-0"
B	4'-2"	5'-8"	5'-2"

TABLE B

SUPPORT	PASSING POCKET NO. 1	PASSING POCKET NO. 2	PASSING POCKET NO. 3
①	5.9 kip/ft	6.1 kip/ft	7.1 kip/ft
②	11.4 kip/ft	10.9 kip/ft	11.9 kip/ft

DATE	REVISION
8/21/96	DCN 75-007: REV. ET DRAIN
4/18/96	DCN 75-001: CLARIFICATION OF 'PROFILE GRADE LINE' LOCATION PER RESPONSE TO RFI NO. 4097-17, REV. 1

PETER G. BIBBES LICENSED PROFESSIONAL ENGINEER No. 6487-S HAWAII, U.S.A.

THIS WORK WAS PREPARED BY ME OR UNDER MY SUPERVISION

STATE OF HAWAII
DEPARTMENT OF TRANSPORTATION
HIGHWAYS DIVISION

TYP. SECTS AT PASSING POCKETS AND TURNOUTS

EXPLORATORY TUNNEL IMPROVEMENTS
H-3 FINISH (UNIT III)
FAIP NO. I-H3-1(75), UNIT III
T.K. TUNNEL/ACCESS ROADS

SCALE: AS NOTED DATE: JUN 1995

SHEET NO. 2S5 OF 17 SHEETS

ORIGINAL PLAN		DATE
	SURVEY PLOTTED BY	
	DRAWN BY G. HERNANDEZ	NOV 94
	TRACED BY	
	DESIGNED BY L. JOHNSON	NOV 94
NOTE BOOK	QUANTITIES BY	
	CHECKED BY G. BERKOVICH	DEC 94
NO.		

HERNANDEZ ELWOOD::2410:IDWG.STRUCT\ST036.FGB71 28JAN95-10.38.30

FED. ROAD DIST NO.	STATE	FED AID PROJ NO	FISCAL YEAR	SHEET NO	TOTAL SHEETS
HAWAII	HAW.	I-H3-1(75) UNIT 111	1994	53	353

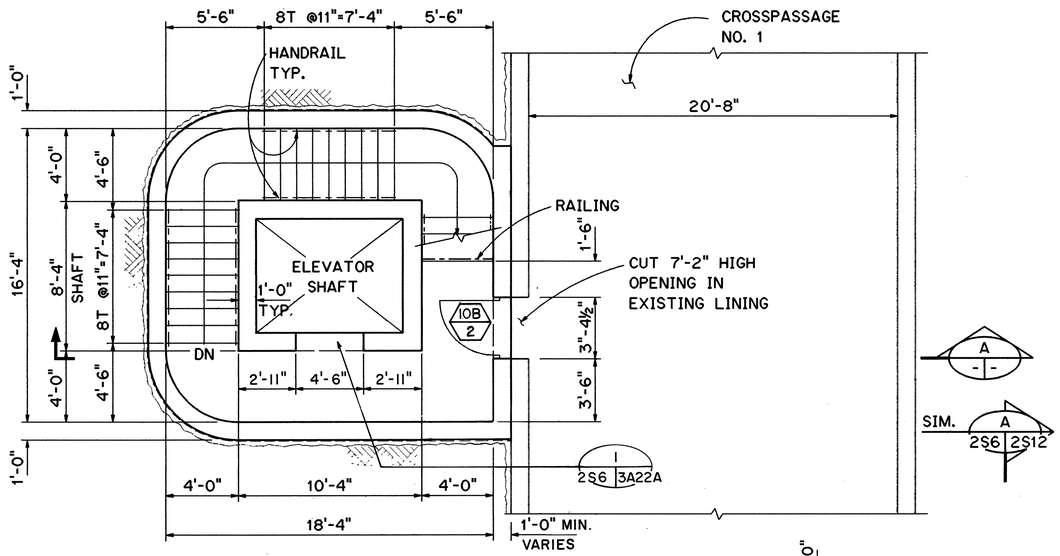

PLAN AT CROSSPASSAGE

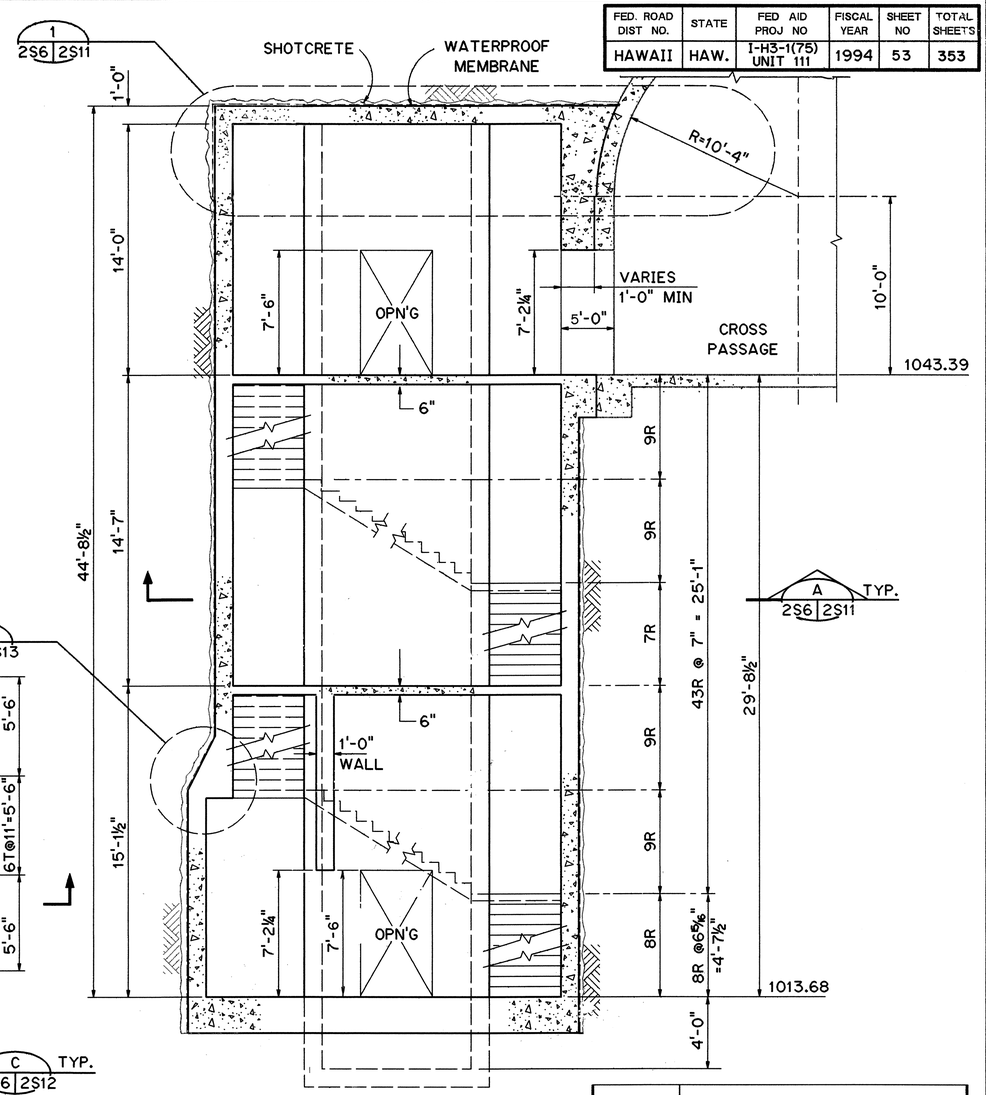

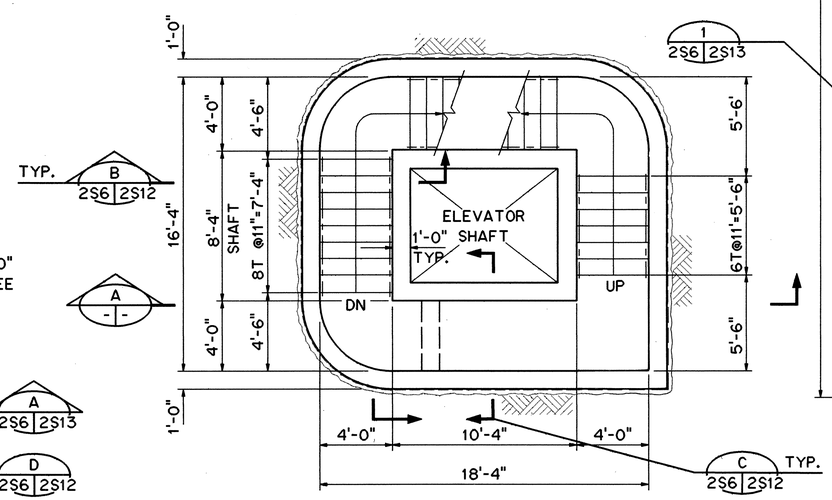

PLAN AT MIDDLE LEVEL

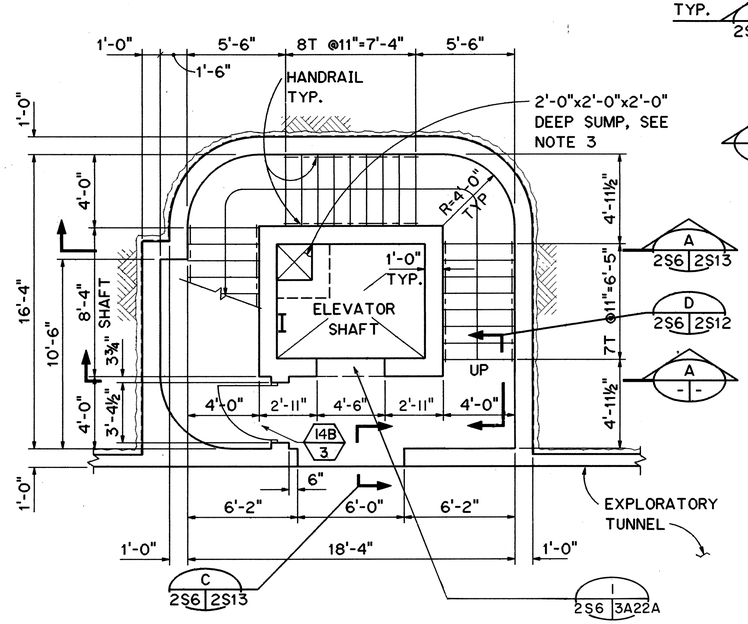

PLAN AT EXPLORATORY TUNNEL

SECTION A - -

5. FOR DOOR SCHEDULE 10B/2 14B/3, SEE SHT. NO. 3A1.
6. FOR DOOR DETAILS, SEE SHT. NO. 2A3.
7. FOR ELEVATOR PIT LADDER, SEE DETAIL 5 SHT. NO. 2A3.

NOTES:

1. FOR REINFORCING DETAILS, SEE SHEET NOS 2S11, 2S12 AND 2S13.
2. FOR GENERAL STRUCTURAL NOTES, SEE SHEET NO. 2S4.
3. FOR SUMP DETAIL, SEE SHEET NO. 2S13.
4. FOR STAIR HANDRAIL, SEE DETAIL 4, SHT. NO. 2A3.

GRAPHIC SCALE
4' 2' 0' 4' 8'
¼" = 1'-0"

PETER G. BIBBES LICENSED PROFESSIONAL ENGINEER No. 6467-S HAWAII, U.S.A.

THIS WORK WAS PREPARED BY ME OR UNDER MY SUPERVISION

DATE	REVISION
10/13/95	ADDENDUM I

STATE OF HAWAII
DEPARTMENT OF TRANSPORTATION
HIGHWAYS DIVISION

CROSSPASSAGE NO. 1
CONNECTION PLANS & SECTION
EXPLORATORY TUNNEL IMPROVEMENTS
H-3 FINISH (UNIT III)
FAIP NO. I-H3-1(75), UNIT III
T.K. TUNNEL/ACCESS ROADS

SCALE: 1/4"=1'-0" DATE: JUN 1995

SHEET NO. 2S6 OF 17 SHEETS

ORIGINAL PLAN | NOTE BOOK NO. | SURVEY PLOTTED BY | DRAWN BY R. HERNANDEZ NOV 94 | TRACED BY " NOV 94 | DESIGNED BY G. BENKOVICH " | QUANTITIES BY " DEC 94 | CHECKED BY M.S. OKYANG "

CHU ELWOOD::2410:DWG.STRUCT\JST023.FGB\1 31JAN95-07.43.30

ADD.53

FED. ROAD DIST. NO.	STATE	FED. AID PROJ. NO.	FISCAL YEAR	SHEET NO.	TOTAL SHEETS
HAWAII	HAW.	I-H3-1(75) UNIT III	1994	54	353

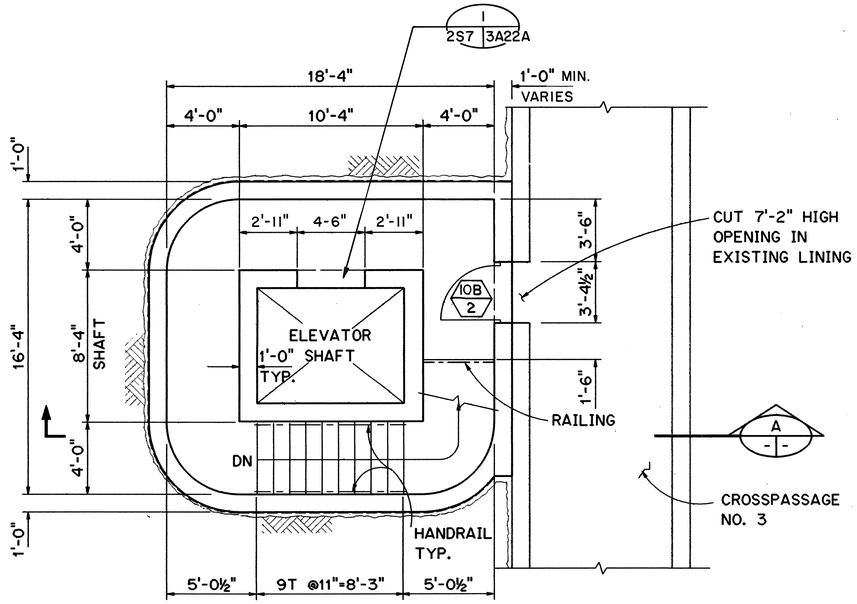

PLAN AT CROSSPASSAGE

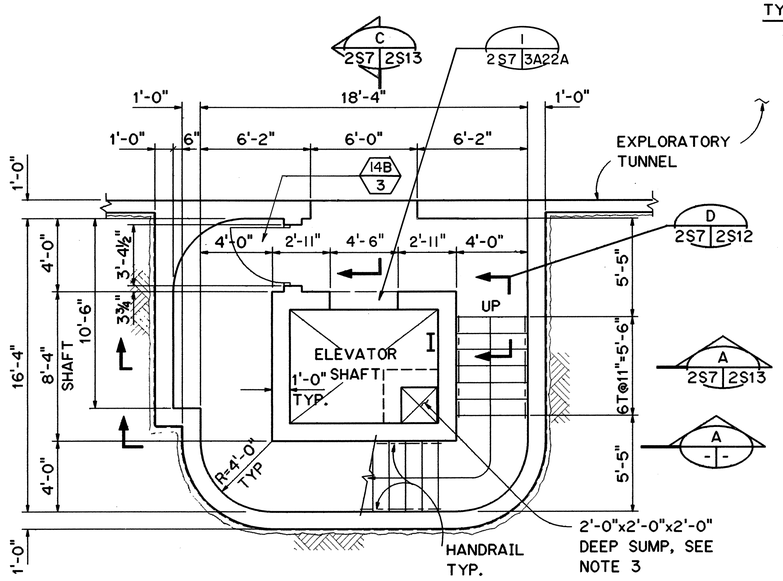

PLAN AT EXPLORATORY TUNNEL

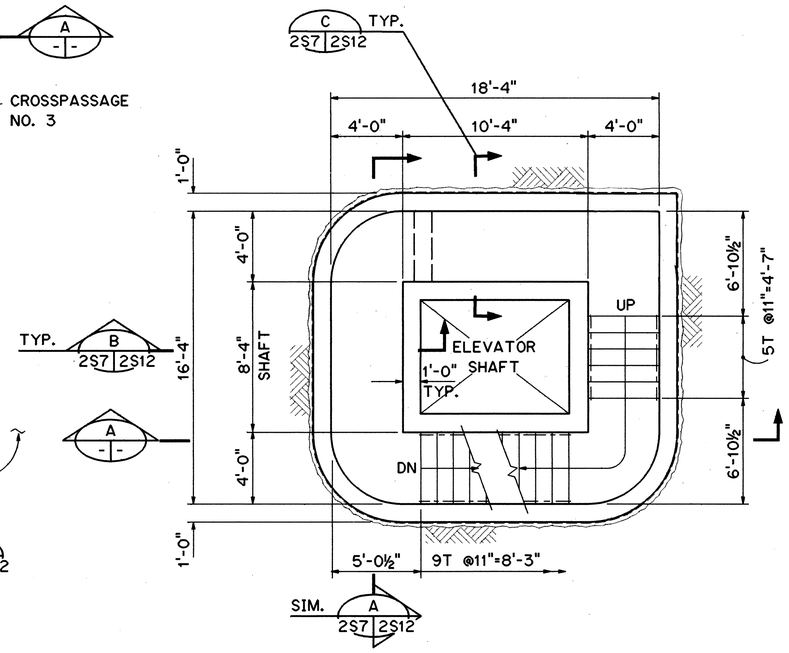

PLAN AT MIDDLE LEVEL

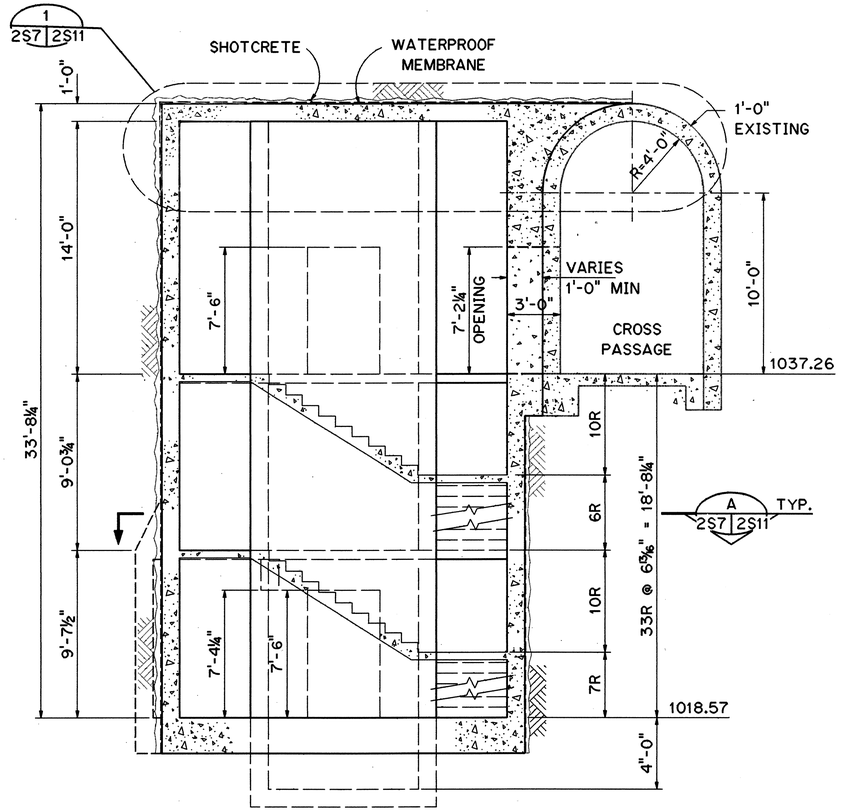

SECTION A

5. FOR DOOR SCHEDULE 10B/2 14B/3, SEE SHT. NO. 3A1.
6. FOR DOOR DETAILS, SEE SHT. NO. 2A3.
7. FOR ELEVATOR PIT LADDER, SEE DETAIL 5 SHT. NO. 2A3.

NOTES:

1. FOR REINFORCING DETAILS, SEE SHEET NOS 2S11, 2S12 AND 2S13.
2. FOR GENERAL STRUCTURAL NOTES, SEE SHEET NO. 2S4.
3. FOR SUMP DETAIL, SEE SHEET NO. 2S13.
4. FOR STAIR HANDRAIL, SEE DETAIL 4, SHT. NO. 2A3.

GRAPHIC SCALE
4' 2' 0' 4' 8'
¼" = 1'-0"

PETER G. BIBBES LICENSED PROFESSIONAL ENGINEER No. 6467-S HAWAII, U.S.A.

THIS WORK WAS PREPARED BY ME OR UNDER MY SUPERVISION

DATE	REVISION
10/13/95	ADDENDUM I

STATE OF HAWAII
DEPARTMENT OF TRANSPORTATION
HIGHWAYS DIVISION

CROSSPASSAGE NO. 3
CONNECTION PLANS & SECTION
EXPLORATORY TUNNEL IMPROVEMENTS
H-3 FINISH (UNIT III)
FAIP NO. I-H3-1(75), UNIT III
T.K. TUNNEL/ACCESS ROADS

SCALE: 1/4"=1'-0" DATE: JUN 1995

SHEET NO. 2S7 OF 17 SHEETS

ORIGINAL PLAN		DATE
	SURVEY PLOTTED BY	
	DRAWN BY R. HERNANDEZ	NOV 94
NOTE BOOK	TRACED BY	
	DESIGNED BY G. BERKOTCH	NOV 94
NO.	QUANTITIES BY	
	CHECKED BY M.S. ONYANG	DEC 94

CHU ELWOOD::2410:[DWG.STRUCT]ST024.FGB71 30JAN95-16:17:50

ADD.54

FED. ROAD DIST. NO.	STATE	FED. AID PROJ. NO.	FISCAL YEAR	SHEET NO.	TOTAL SHEETS
HAWAII	HAW.	I-H3-1(75) UNIT III	1994	55	353

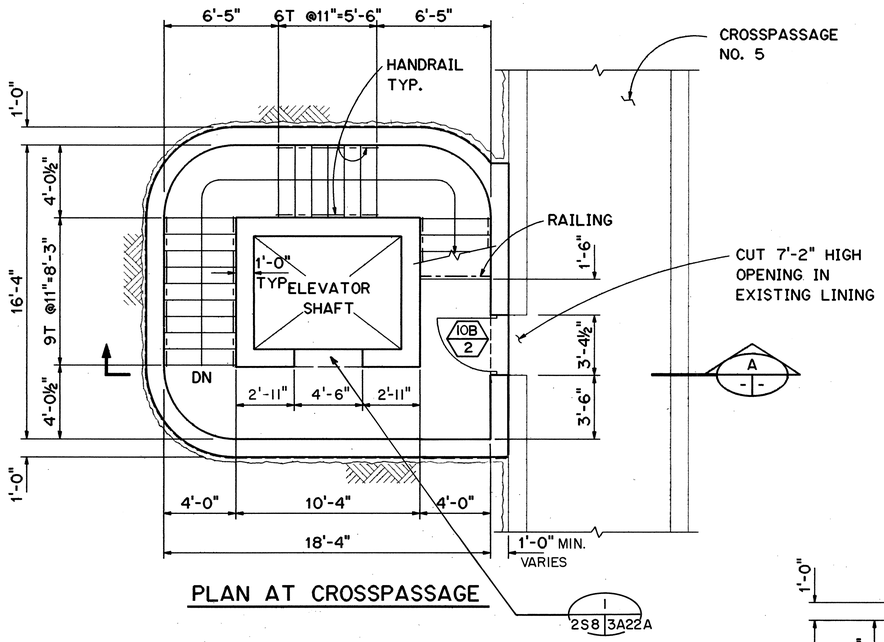

PLAN AT CROSSPASSAGE

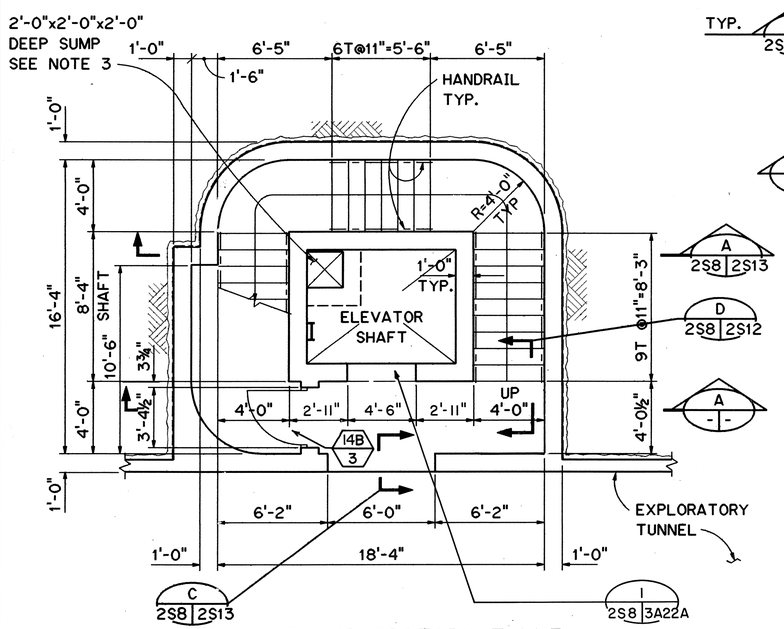

PLAN AT EXPLORATORY TUNNEL

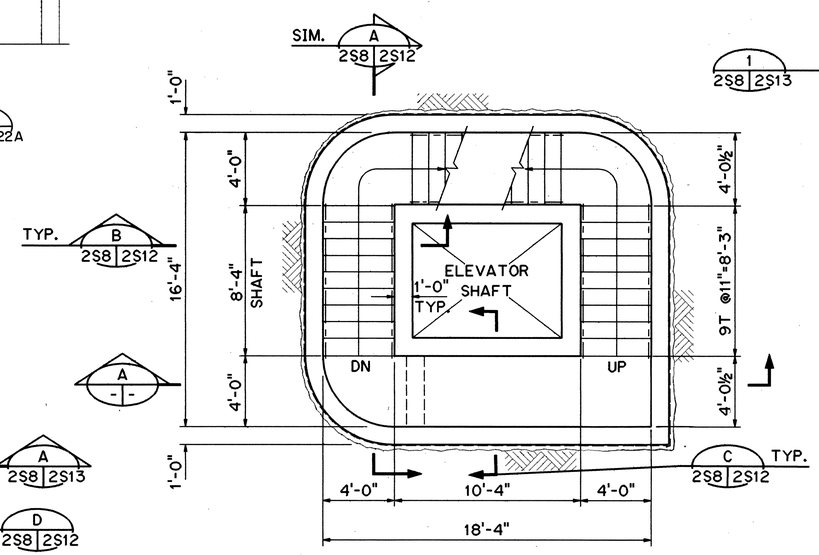

PLAN AT MIDDLE LEVEL

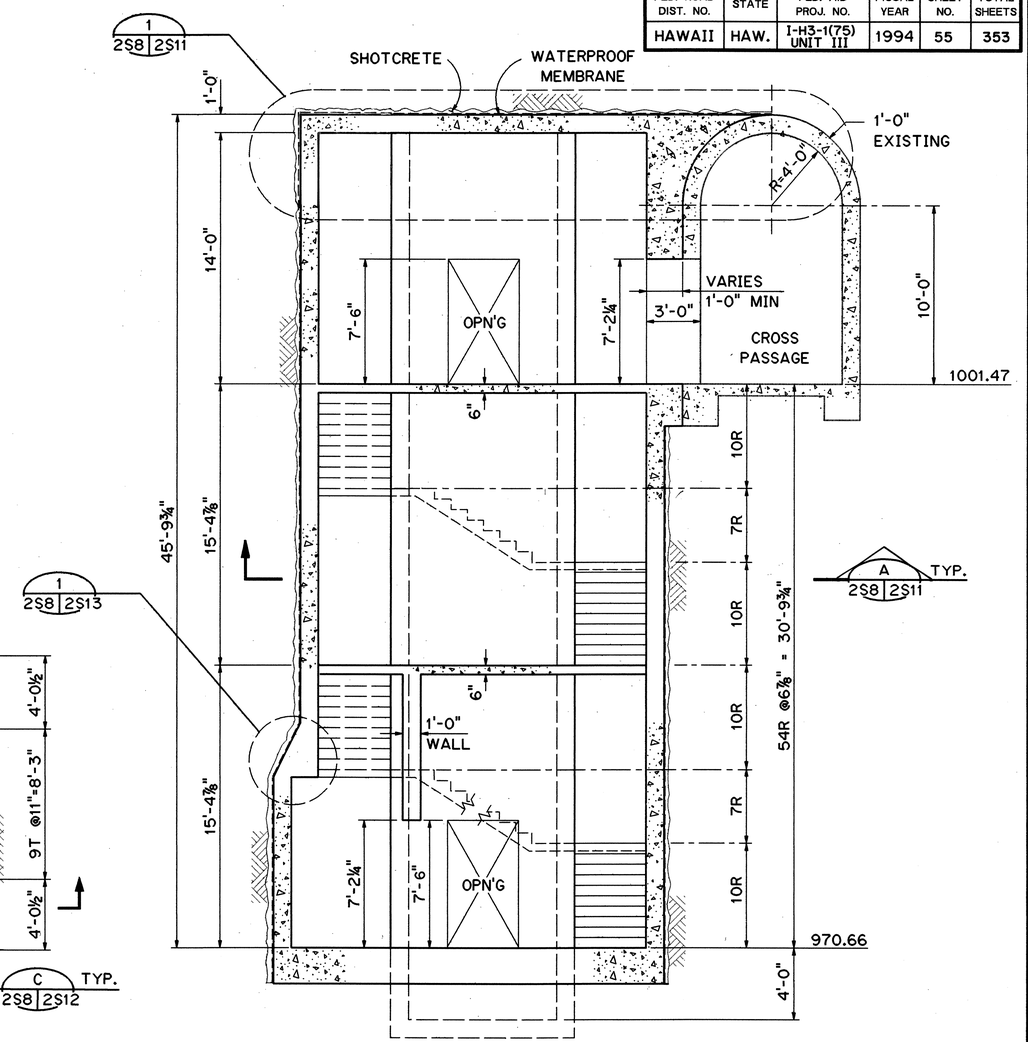

SECTION A

NOTES:

1. FOR REINFORCING DETAILS, SEE SHEET NOS 2S11, 2S12 AND 2S13.
2. FOR GENERAL STRUCTURAL NOTES, SEE SHEET NO. 2S4.
3. FOR SUMP DETAIL, SEE SHEET NO. 2S13.
4. FOR STAIR HANDRAIL, SEE DETAIL 4, SHT. NO. 2A3.
5. FOR DOOR SCHEDULE 10B/2, 14B/3, SEE SHT. NO. 3A1.
6. FOR DOOR DETAILS, SEE SHT. NO. 2A3.
7. FOR ELEVATOR PIT LADDER, SEE DETAIL 5 SHT. NO. 2A3.

GRAPHIC SCALE
4' 2' 0' 4' 8'
¼" = 1'-0"

PETER G. BIBBEE LICENSED PROFESSIONAL ENGINEER No. 6467-S HAWAII, U.S.A.

THIS WORK WAS PREPARED BY ME OR UNDER MY SUPERVISION

DATE	REVISION
10/13/95	ADDENDUM I

STATE OF HAWAII
DEPARTMENT OF TRANSPORTATION
HIGHWAYS DIVISION

CROSSPASSAGE NO. 5
CONNECTION PLANS & SECTION
EXPLORATORY TUNNEL IMPROVEMENTS
H-3 FINISH (UNIT III)
FAIP NO. I-H3-1(75), UNIT III
T.K. TUNNEL/ACCESS ROADS

SCALE: 1/4"=1'-0" DATE: JUN 1995

SHEET NO. 2S8 OF 17 SHEETS

		DATE
ORIGINAL PLAN	SURVEY PLOTTED BY	
	DRAWN BY R. HERNANDEZ	NOV 94
NOTE BOOK	TRACED BY	
	DESIGNED BY G. BERKOVICH	NOV 94
NO.	QUANTITIES BY	
	CHECKED BY M.S. OHYANG	DEC 94

CHU 2410:IDWG.STRUCTJST025.FGB71 30JAN95-16.28.30

FED. ROAD DIST. NO.	STATE	FED. AID PROJ. NO.	FISCAL YEAR	SHEET NO.	TOTAL SHEETS
HAWAII	HAW.	I-H3-1(75) UNIT III	1994	56	353

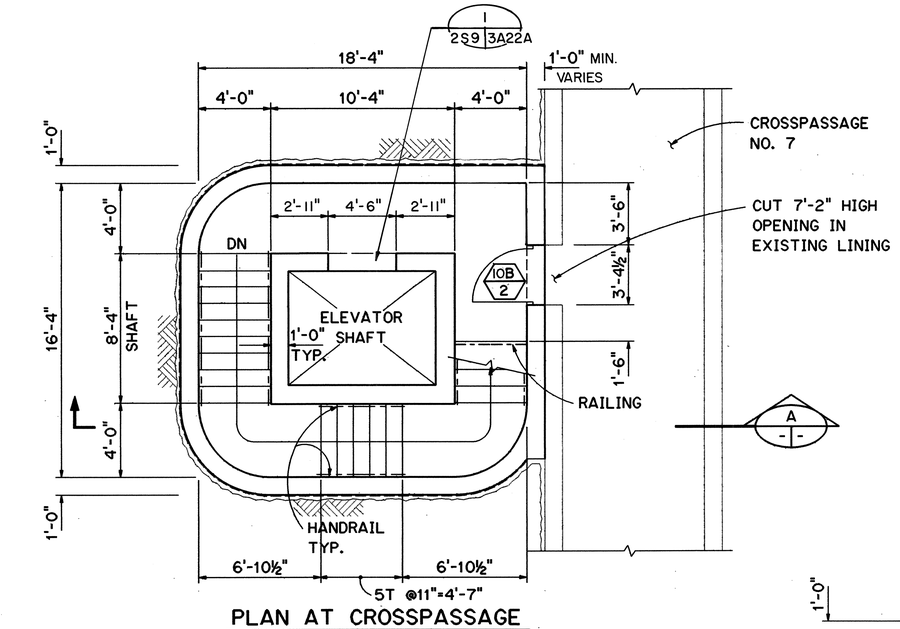

PLAN AT CROSSPASSAGE

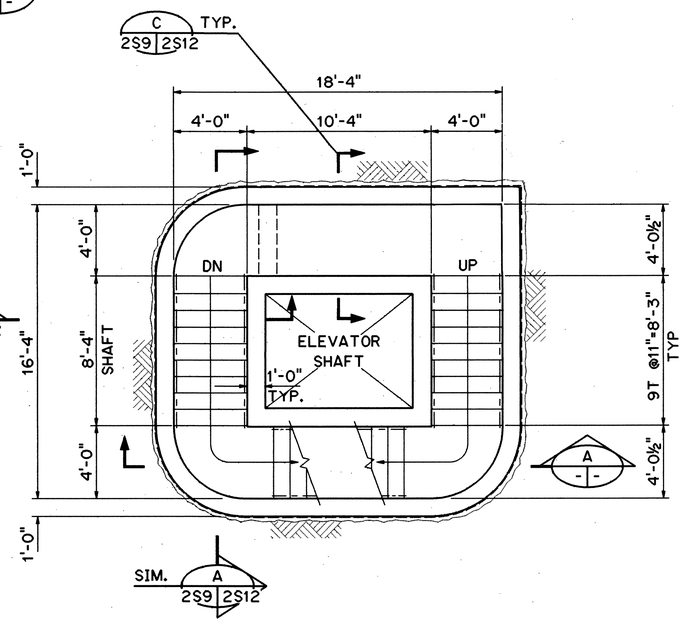

PLAN AT MIDDLE LEVEL

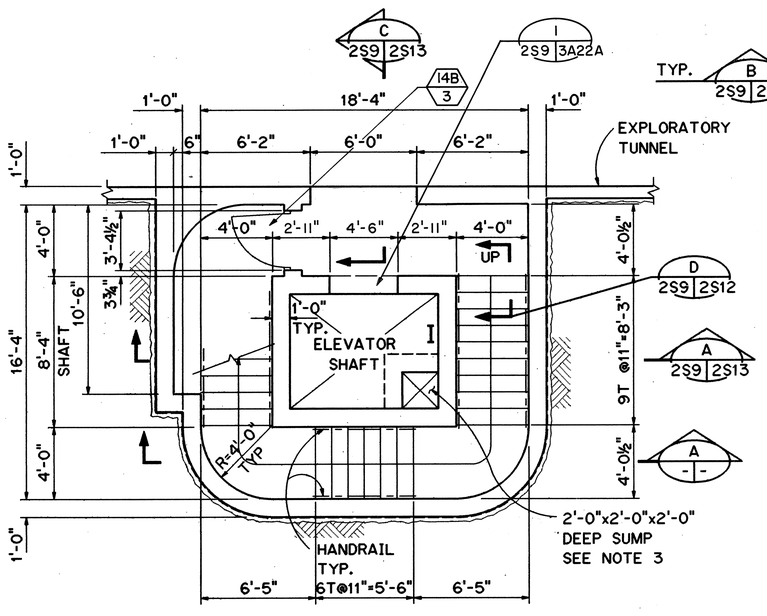

PLAN AT EXP. TUNNEL

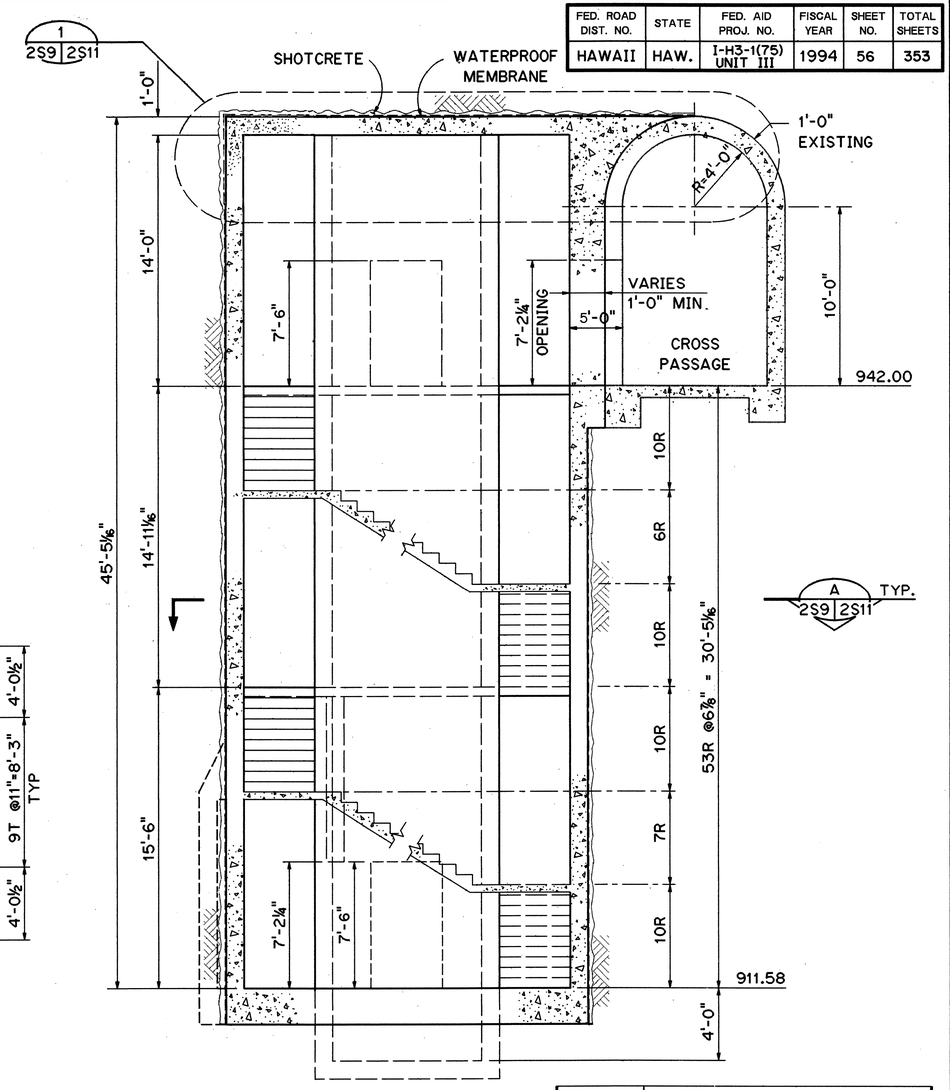

SECTION A

NOTES:

1. FOR REINFORCING DETAILS, SEE SHEET NOS 2S11, 2S12 AND 2S13.
2. FOR GENERAL STRUCTURAL NOTES, SEE SHEET NO. 2S4.
3. FOR SUMP DETAIL, SEE SHEET NO. 2S13.
4. FOR STAIR HANDRAIL, SEE DETAIL 4, SHT. NO. 2A3.
5. FOR DOOR SCHEDULE 10B/2 14B/3, SEE SHT. NO. 3A1.
6. FOR DOOR DETAILS, SEE SHT. NO. 2A3.
7. FOR ELEVATOR PIT LADDER, SEE DETAIL 5 SHT. NO. 2A3.

GRAPHIC SCALE
4' 2' 0' 4' 8'
¼" = 1'-0"

PETER G. BIBBES LICENSED PROFESSIONAL ENGINEER No. 6467-S HAWAII, U.S.A.

THIS WORK WAS PREPARED BY ME OR UNDER MY SUPERVISION

DATE	REVISION
10/13/95	ADDENDUM I

STATE OF HAWAII
DEPARTMENT OF TRANSPORTATION
HIGHWAYS DIVISION

CROSSPASSAGE NO. 7
CONNECTION PLANS & SECTION
EXPLORATORY TUNNEL IMPROVEMENTS
H-3 FINISH (UNIT III)
FAIP NO. I-H3-1(75), UNIT III
T.K. TUNNEL/ACCESS ROADS

SCALE: 1/4"=1'-0" DATE: JUN 1995

SHEET NO. 2S9 OF 17 SHEETS

ORIGINAL PLAN		DATE
	SURVEY PLOTTED BY	NOV 94
	DRAWN BY R. HERNANDEZ	NOV 94
NOTE BOOK	TRACED BY	
	DESIGNED BY G. DEMOVITCH	NOV 94
	QUANTITIES BY	
NO.	CHECKED BY M.S. OHYANG	DEC 94

CHU ELWOOD::2410:1DWG.STRUCT1JST026.FGB71 30JAN95-16.52.40

ADD.56

FED. ROAD DIST. NO.	STATE	FED. AID PROJ. NO.	FISCAL YEAR	SHEET NO.	TOTAL SHEETS
HAWAII	HAW.	I-H3-1(75) UNIT III	1994	57	353

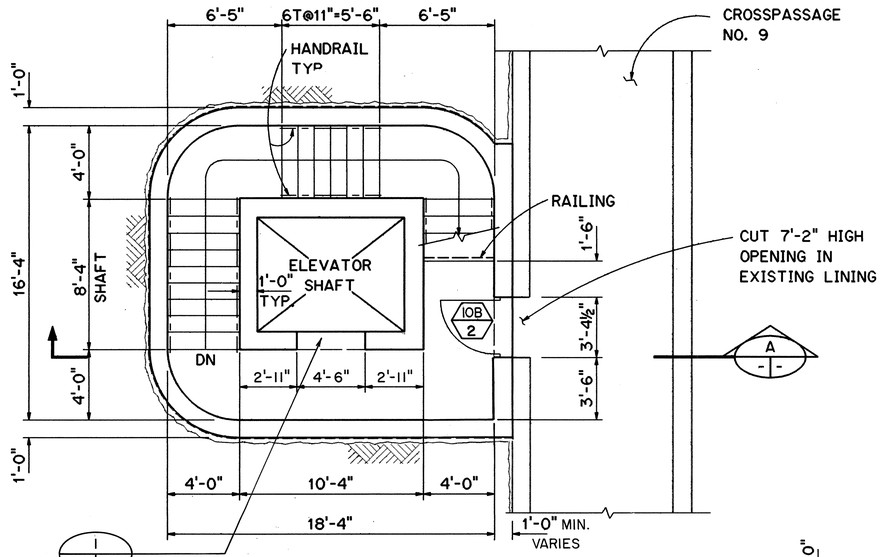

PLAN AT CROSSPASSAGE

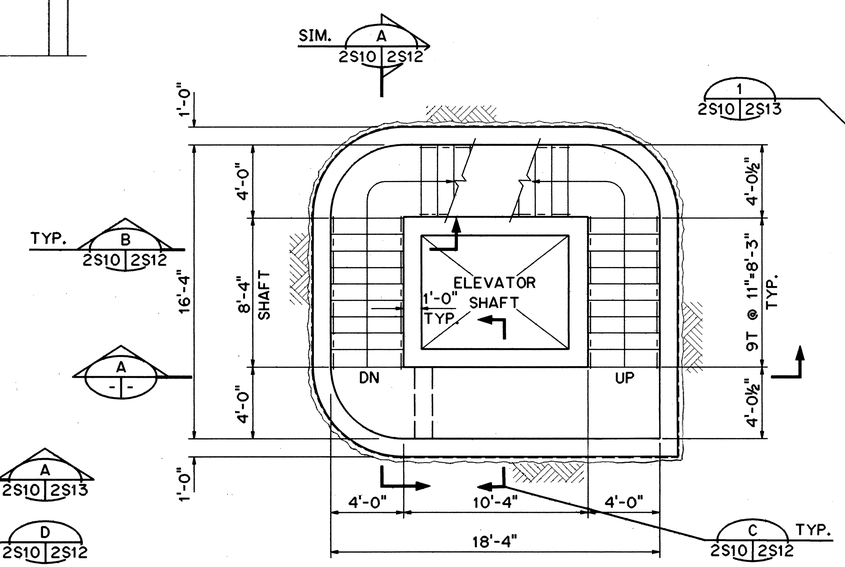

PLAN AT MIDDLE LEVEL

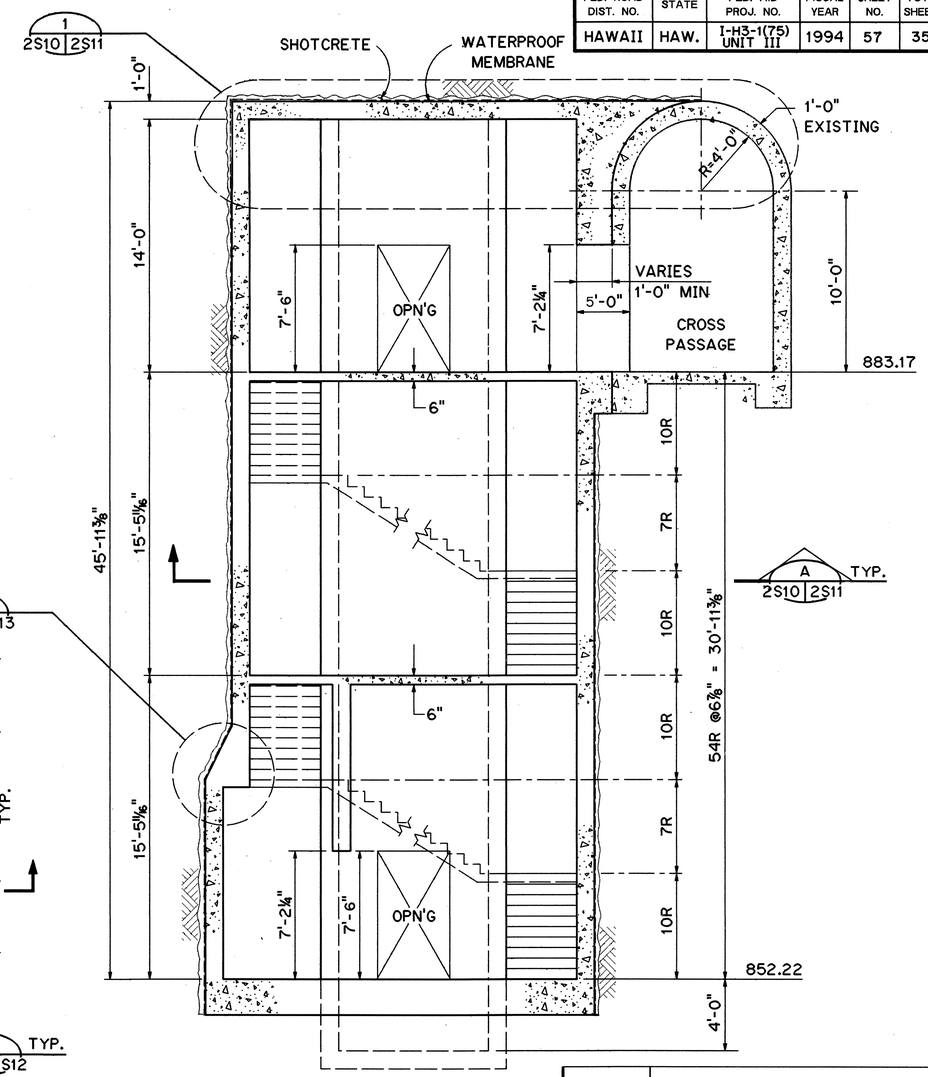

SECTION A

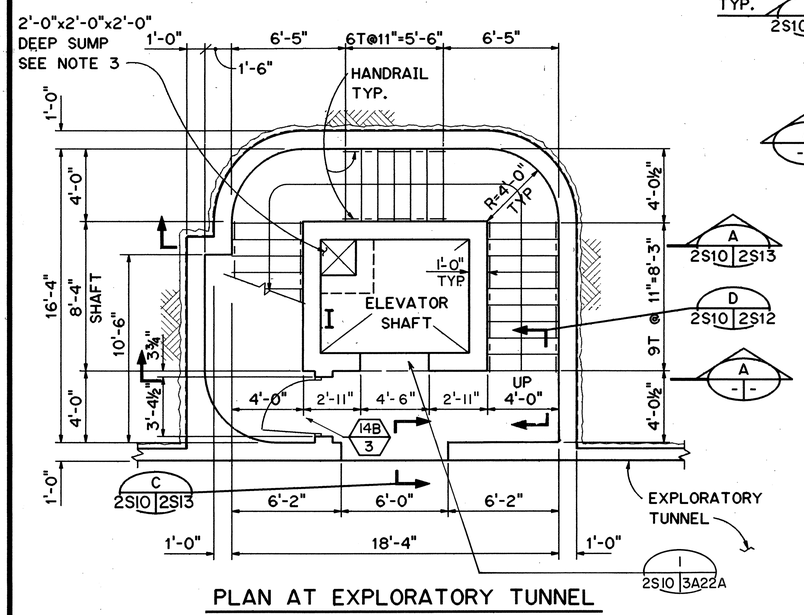

PLAN AT EXPLORATORY TUNNEL

5. FOR DOOR SCHEDULE 10B/2 14B/3, SEE SHT. NO. 3A1.
6. FOR DOOR DETAILS, SEE SHT. NO. 2A3.
7. FOR ELEVATOR PIT LADDER, SEE DETAIL 5 SHT. NO. 2A3.

NOTES:

1. FOR REINFORCING DETAILS, SEE SHEET NOS 2S11, 2S12 AND 2S13.
2. FOR GENERAL STRUCTURAL NOTES, SEE SHEET NO. 2S4.
3. FOR SUMP DETAIL, SEE SHEET NO. 2S13.
4. FOR STAIR HANDRAIL, SEE DETAIL 4, SHT. NO. 2A3.

GRAPHIC SCALE
4' 2' 0' 4' 8'
¼" = 1'-0"

PETER G. BIGGES LICENSED PROFESSIONAL ENGINEER No. 8487-S HAWAII, U.S.A.

THIS WORK WAS PREPARED BY ME OR UNDER MY SUPERVISION

DATE	REVISION
10/13/95	ADDENDUM I

STATE OF HAWAII
DEPARTMENT OF TRANSPORTATION
HIGHWAYS DIVISION

CROSSPASSAGE NO. 9
CONNECTION PLANS & SECTION
EXPLORATORY TUNNEL IMPROVEMENTS
H-3 FINISH (UNIT III)
FAIP NO. I-H3-1(75), UNIT III
T.K. TUNNEL/ACCESS ROADS

SCALE: 1/4"=1'-0" DATE: JUN 1995

SHEET NO. 2S10 OF 17 SHEETS

		DATE
SURVEY PLOTTED BY		
DRAWN BY	R. HERNANDEZ	NOV 94
TRACED BY		
DESIGNED BY	G. BENKOVICH	NOV 94
QUANTITIES BY		
CHECKED BY	M.S. OWYANG	DEC 94

ORIGINAL PLAN
NOTE BOOK
NO.

CHU 241O:[DWG.STRUCT]ST027.FGB71 31JAN95-07.49.10

ADD.57

FED. ROAD DIST. NO.	STATE	FED. AID PROJ. NO.	FISCAL YEAR	SHEET NO.	TOTAL SHEETS
HAWAII	HAW.	I-H3-1(75) UNIT III	1994	58	353

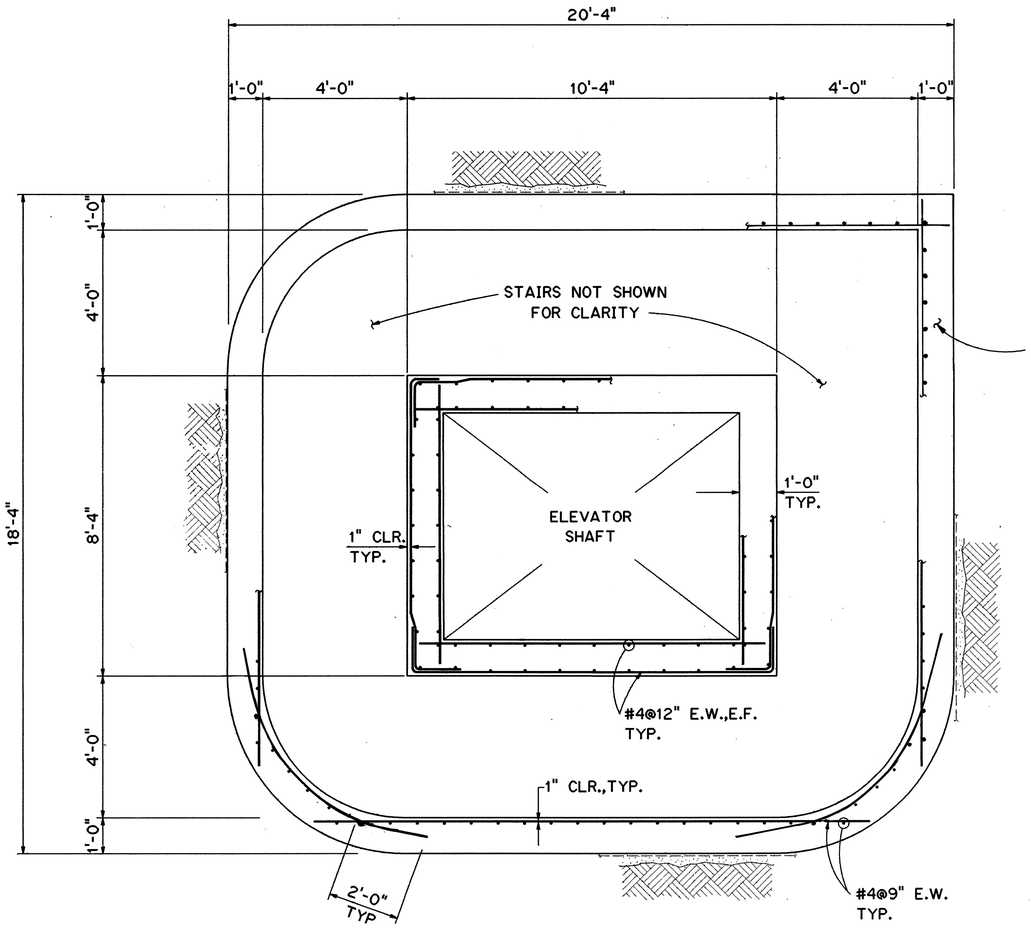

TYP. SHAFT & LINING REINFORCEMENT

SECTION A
SCALE: 1/2"=1'-0" 2S6 2S11 TO 2S10

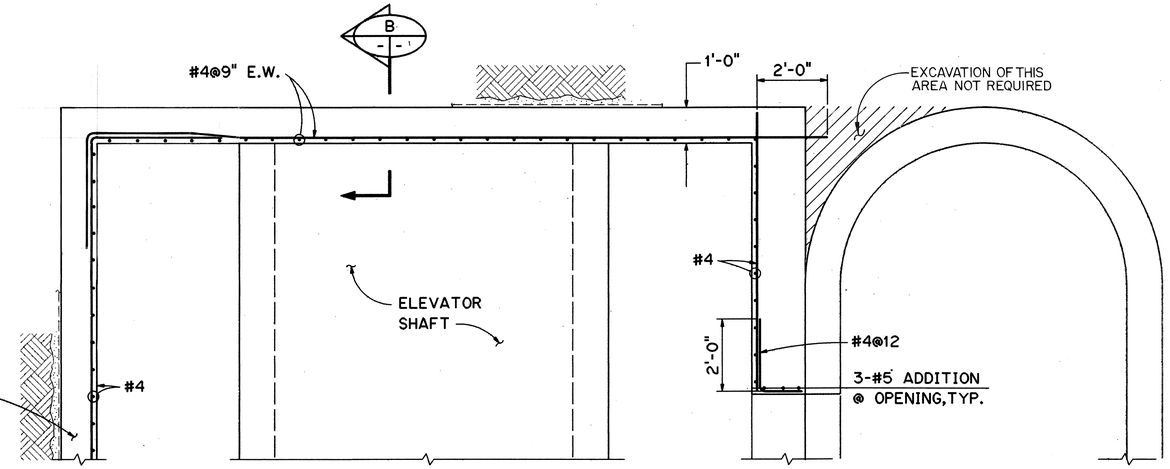

DETAIL 1
SCALE: 1/2"=1'-0" 2S6 2S11 TO 2S10

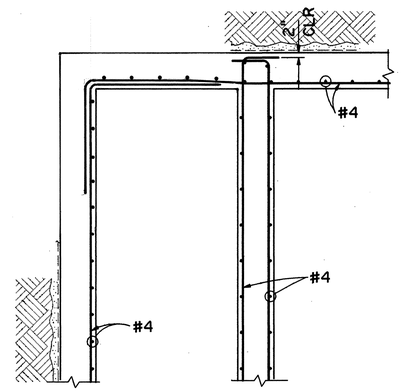

TYP. WALL LINING CONN.

SECTION B
SCALE: 1/2"=1'-0" - -

NOTES:

1. FOR GENERAL STRUCTURAL NOTES, SEE SHEET NO. 2S4.

GRAPHIC SCALE
2' 1' 0' 2' 4'
½" = 1'-0"

PETER G. BIGGES LICENSED PROFESSIONAL ENGINEER No. 6467-S HAWAII, U.S.A.

THIS WORK WAS PREPARED BY ME OR UNDER MY SUPERVISION

DATE	REVISION

STATE OF HAWAII
DEPARTMENT OF TRANSPORTATION
HIGHWAYS DIVISION

SHAFT LINING SECTIONS AND DETAIL

EXPLORATORY TUNNEL IMPROVEMENTS
H-3 FINISH (UNIT III)
FAIP NO. I-H3-1(75), UNIT III
T. K. TUNNEL

SCALE: AS NOTED DATE: JUN 1995

SHEET NO. 2S11 OF 17 SHEETS

ORIGINAL PLAN		DATE
	SURVEY PLOTTED BY	
	DRAWN BY E. HERNANDEZ	NOV 94
	TRACED BY " "	NOV 94
NOTE BOOK	DESIGNED BY G. BERKOTCH	
	QUANTITIES BY " "	NOV 94
NO.	CHECKED BY N.S. OWYANG	DEC 94

HERNANDEZ ELWOOD::2410:[DWG.STRUCT]ST032.FGB71 28JAN95-08.59.30

FED. ROAD DIST. NO.	STATE	FED. AID PROJ. NO.	FISCAL YEAR	SHEET NO.	TOTAL SHEETS
HAWAII	HAW.	I-H3-1(75) UNIT III	1994	59	353

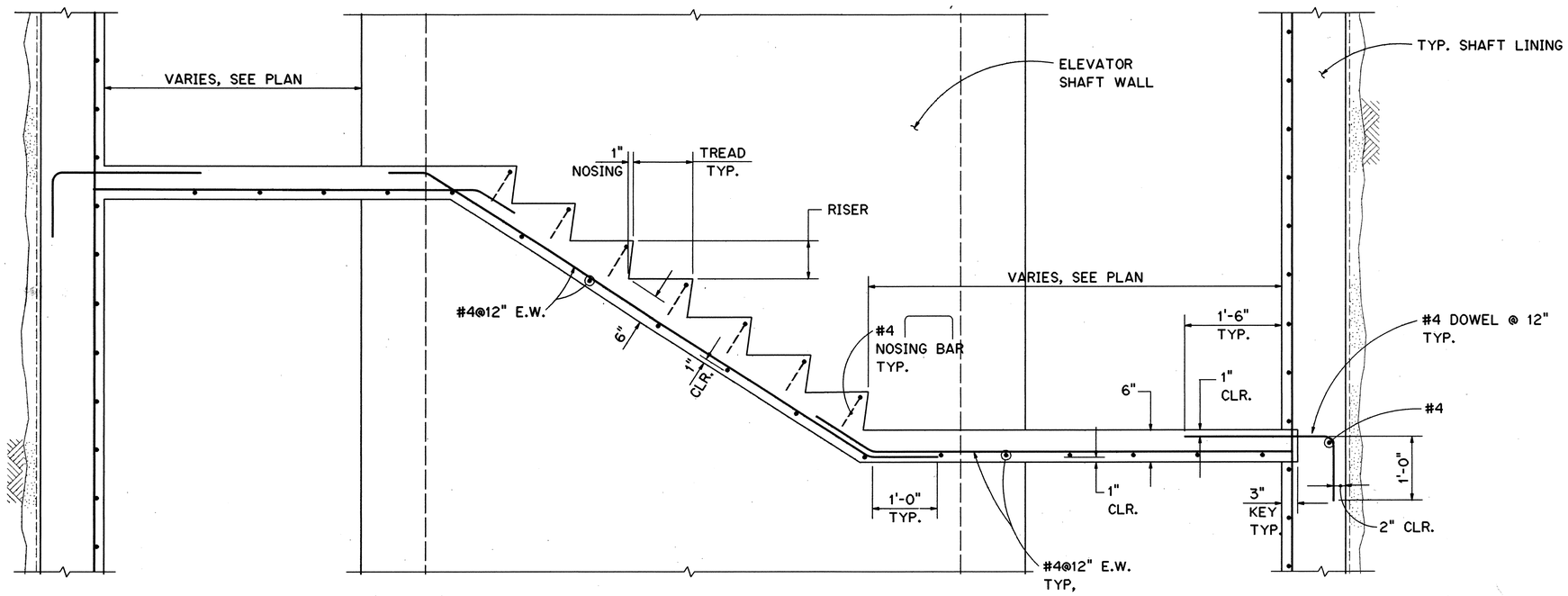

SECTION A (2S6 TO 2S10 | 2S12)
SCALE: 1"=1'-0"

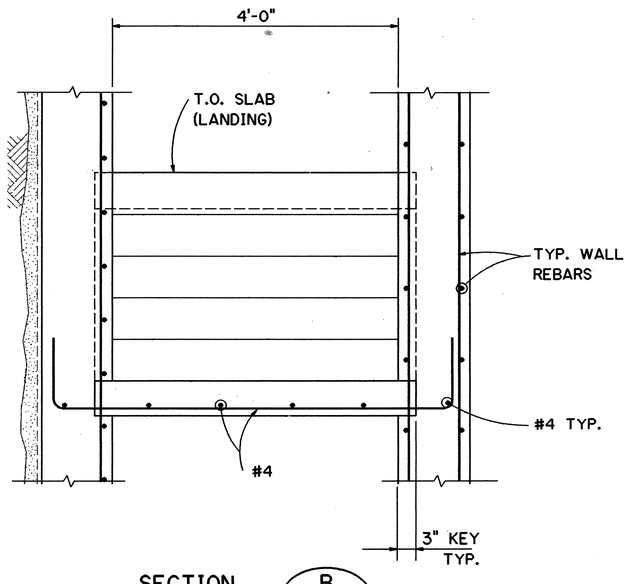

SECTION B (2S0 TO 2S10 | 2S12)
SCALE: 1"=1'-0"

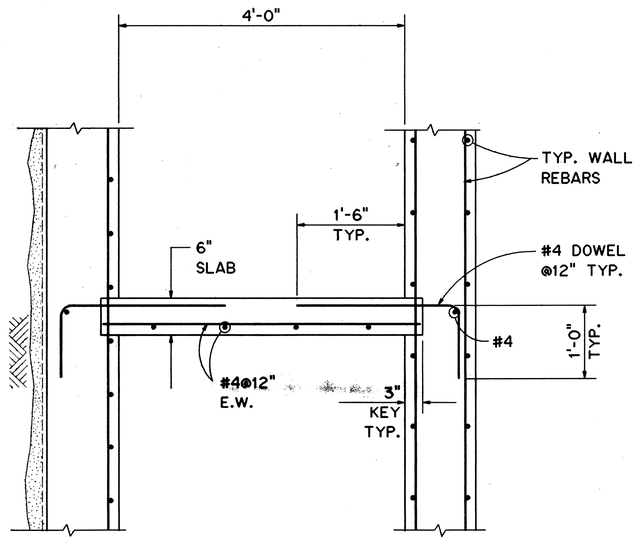

SECTION C (2S6 TO 2S10 | 2S12)
SCALE: 1"=1'-0"

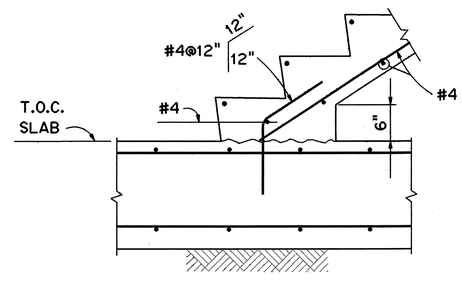

SECTION D (2S6 TO 2S10 | 2S12)
SCALE: 1"=1'-0"

NOTES:

1. FOR GENERAL STRUCTURAL NOTES, SEE SHEET NO. 2S4.

GRAPHIC SCALE
1' 0' 1' 2'
1" = 1'-0"

PETER G. BIBBES LICENSED PROFESSIONAL ENGINEER No. 6467-S HAWAII, U.S.A.

THIS WORK WAS PREPARED BY ME OR UNDER MY SUPERVISION

DATE	REVISION

STATE OF HAWAII
DEPARTMENT OF TRANSPORTATION
HIGHWAYS DIVISION

TYPICAL STAIR SECTIONS

EXPLORATORY TUNNEL IMPROVEMENTS
H-3 FINISH (UNIT III)
FAIP NO. I-H3-1(75), UNIT III
T.K. TUNNEL/ACCESS ROADS

SCALE: AS NOTED DATE: JUN 1995

SHEET NO. 2S12 OF 17 SHEETS

ORIGINAL PLAN		DATE
	SURVEY PLOTTED BY	
	DRAWN BY M. HERNANDEZ	NOV 94
NOTE BOOK	TRACED BY	" "
	DESIGNED BY G. BERKOVICH	NOV 94
	QUANTITIES BY	" "
NO.	CHECKED BY M.S. OWYANG	DEC 95

CHU ELWOOD::2410:DWG.STRUCT\ST035.FGB71 30JAN95-14.19.50

FED. ROAD DIST. NO.	STATE	FED. AID PROJ. NO.	FISCAL YEAR	SHEET NO.	TOTAL SHEETS
HAWAII	HAW.	I-H3-1(75) UNIT III	1994	60	353

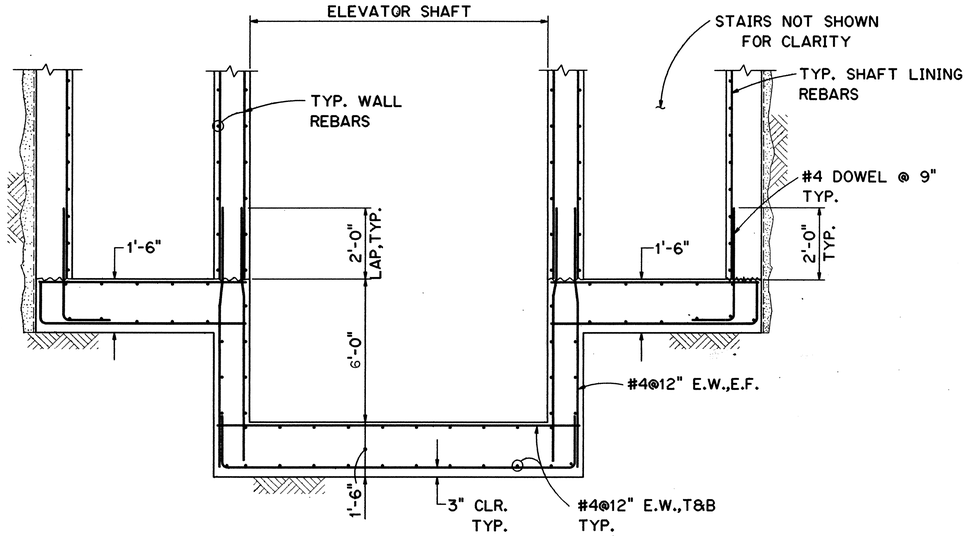

SECTION A
SCALE: 1/2"=1'-0" 2S6 2S13 TO 2S10

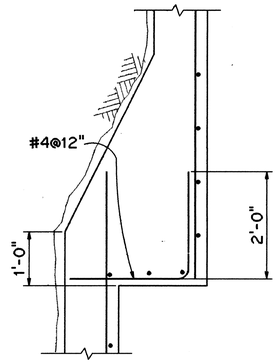

DETAIL 1
SCALE: ¾"=1'-0" 2S6 2S13 2S8 2S10

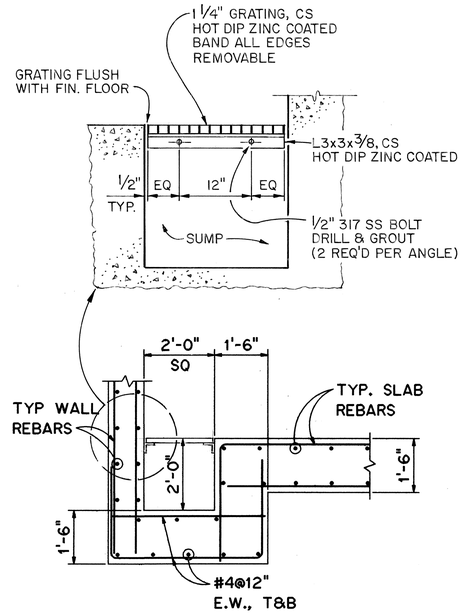

TYPICAL SECTION @ SUMP
SCALE: 1/2"=1'-0"

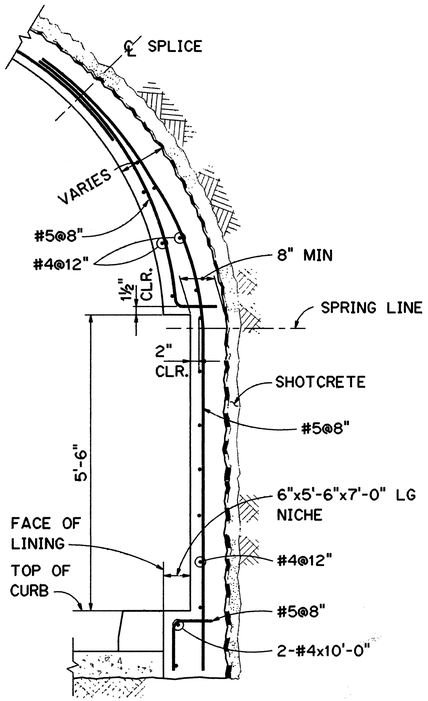

ELECTRICAL NICHE

SECTION B
SCALE: ¾"=1'-0" - -

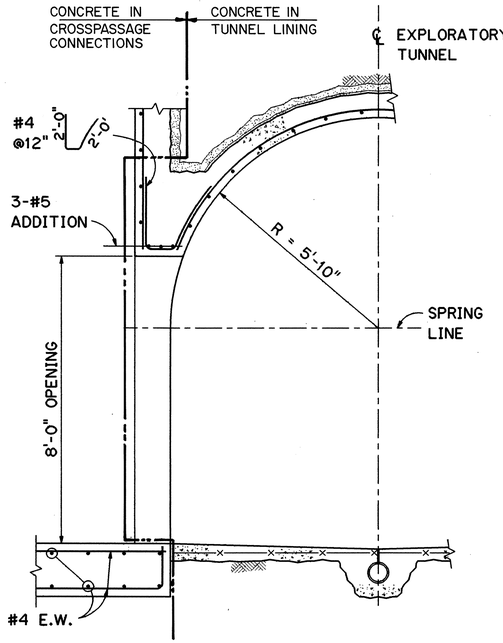

SECTION C
SCALE: 1/2"=1'-0" 2S6 2S13 TO 2S10

NOTES:

1. FOR GENERAL STRUCTURAL NOTES, SEE SHEET NO. 2S4.

GRAPHIC SCALE
2' 1' 0' 2' 4'
1/2" = 1'-0"
1' 0' 1' 2' 3'
3/4" = 1'-0"

PETER G. BIBBES
LICENSED PROFESSIONAL ENGINEER
No. 6467-S
HAWAII, U.S.A.

THIS WORK WAS PREPARED BY ME OR UNDER MY SUPERVISION

DATE	REVISION

STATE OF HAWAII
DEPARTMENT OF TRANSPORTATION
HIGHWAYS DIVISION

MISCELLANEOUS DETAILS & SECTIONS

EXPLORATORY TUNNEL IMPROVEMENTS
H-3 FINISH (UNIT III)
FAIP NO. I-H3-1(75), UNIT III
T.K. TUNNEL/ACCESS ROADS

SCALE: AS NOTED DATE: JUN 1995

SHEET NO. 2S13 OF 17 SHEETS

ORIGINAL PLAN		DATE
	SURVEY PLOTTED BY	
	DRAWN BY	" NOV 94
	TRACED BY R. HERNANDEZ	" NOV 94
NOTE BOOK	DESIGNED BY G. BENKOVICH	" NOV 94
	QUANTITIES BY	" DEC 94
NO.	CHECKED BY M.S. OWYANG	

HERNANDEZ ELWOOD::2410:IDWG.STRUCTJST034.FGB71 28JAN95-09.04.10

FED. ROAD DIST. NO.	STATE	FED. AID PROJ. NO.	FISCAL YEAR	SHEET NO.	TOTAL SHEETS
HAWAII	HAW.	I-H3-1(75) UNIT III	1994	61	353

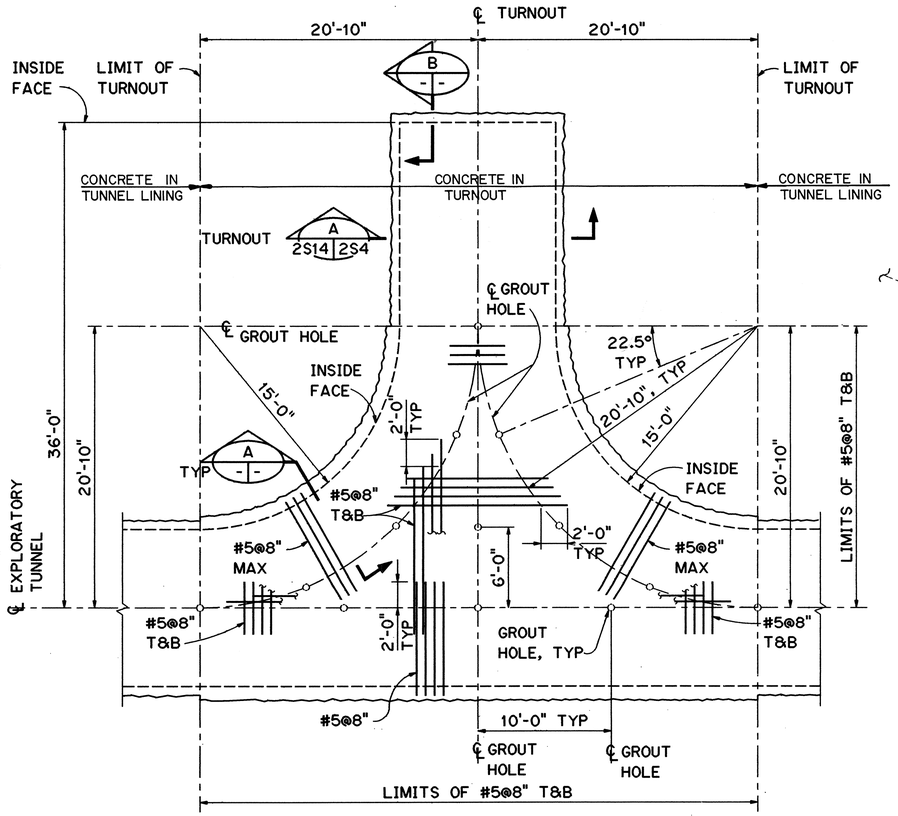

TURNOUT PLAN

SCALE: 3/16"=1'-0"

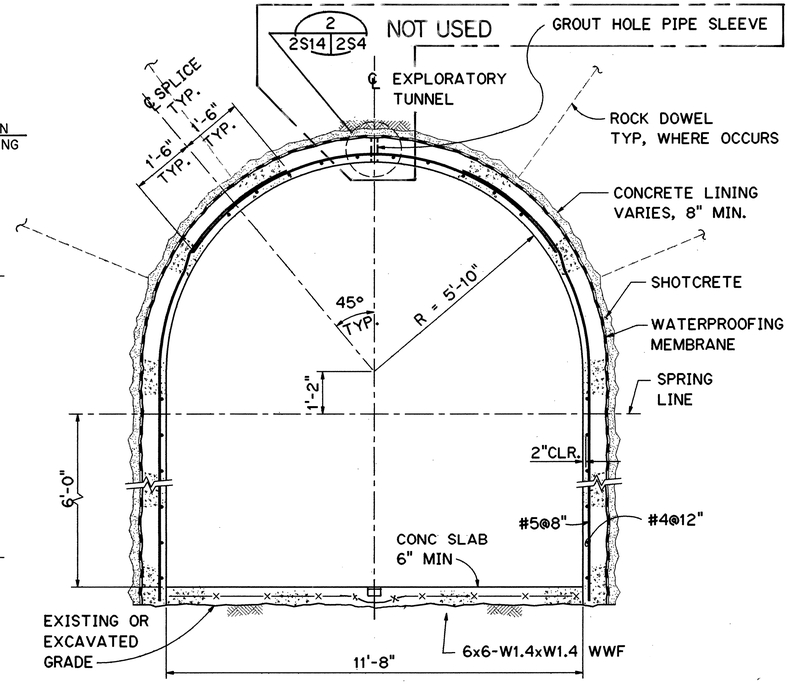

SECTION D

SCALE: 1/2"=1'-0"

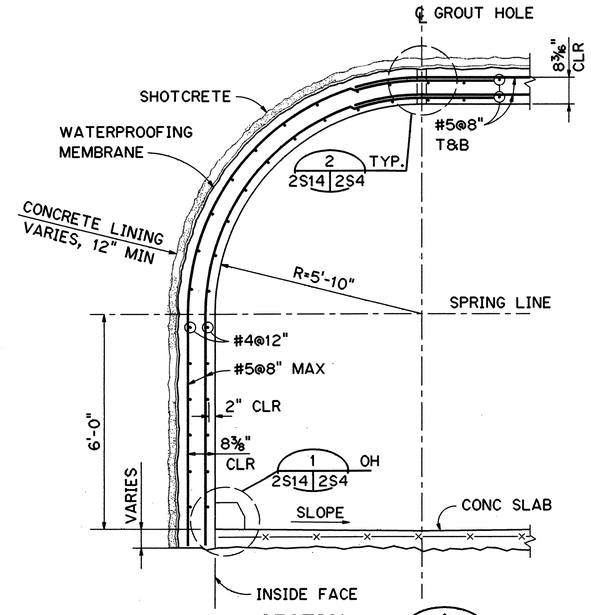

SECTION A

SCALE: 1/2"=1'-0"

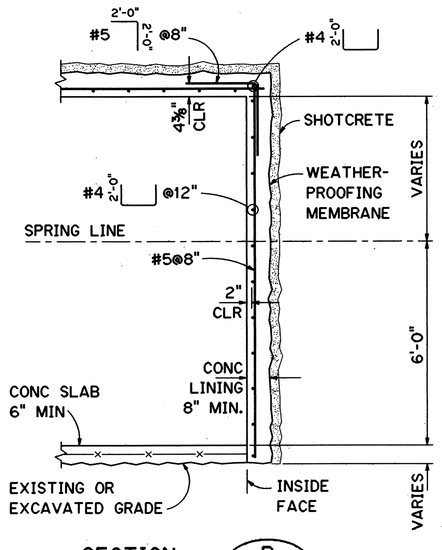

SECTION B

SCALE: 1/2"=1'-0"

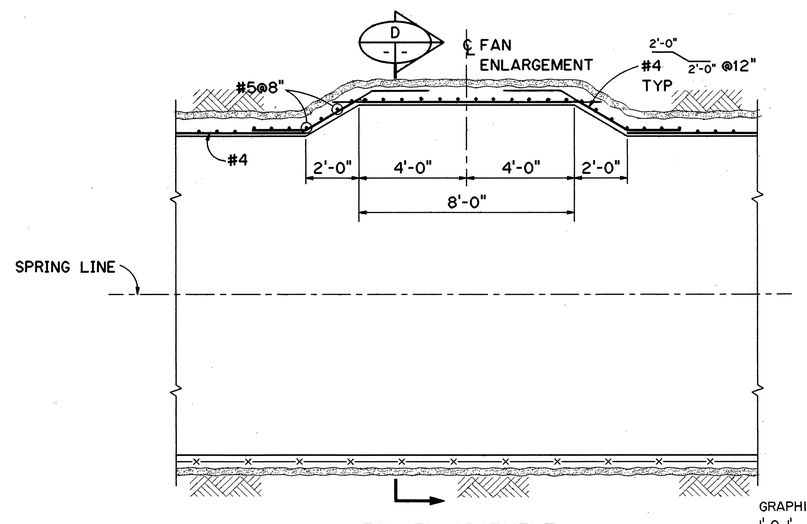

FAN ENLARGEMENT

SECTION C

SCALE: 3/8"=1'-0"

2S1 2S14 2S3

GRAPHIC SCALES

1' 0 1' 3' 5' 10'
3/16" = 1'-0"
1' 0 1' 3' 5'
3/8" = 1'-0"
1' 0 1' 3' 5'
1/2" = 1'-0"

PETER G. BIBBES LICENSED PROFESSIONAL ENGINEER No. 6467-S HAWAII, U.S.A.

THIS WORK WAS PREPARED BY ME OR UNDER MY SUPERVISION

NOTES:

1. FOR ADDITIONAL NOTES, SEE SHEET NO. 2S4.
2. DURING GROUTING OPERATION, PROVIDE TEMPORARY FALSEWORK SUPPORT OF THE LINING AT THE GROUT HOLE. THE SUPPORT SHALL BE DESIGNED BY THE CONTRACTOR FOR A SERVICE LOAD OF 40 KIPS.
3. THE ALLOWABLE BEARING PRESSURE AT THE TURNOUTS IS 20,000 PSF.
4. SEE MECHANICAL PLANS FOR EMBEDDED ITEMS AT FAN ENLARGEMENT.

DATE	REVISION
8/21/96	DCN75-007: REV. ET DRAIN

STATE OF HAWAII
DEPARTMENT OF TRANSPORTATION
HIGHWAYS DIVISION

TURNOUT PLAN, SECTIONS AND DETAILS

EXPLORATORY TUNNEL IMPROVEMENTS

H-3 FINISH (UNIT III)
FAIP NO. I-H3-1(75), UNIT III
T.K. TUNNEL/ACCESS ROADS

SCALE: AS NOTED DATE: JUN 1995

SHEET NO. 2S14 OF 17 SHEETS

ORIGINAL PLAN		DATE
	SURVEY PLOTTED BY	
	DRAWN BY L. HERNANDEZ	NOV 94
NOTE BOOK	TRACED BY	NOV 94
	DESIGNED BY L. JOHNSON	
	QUANTITIES BY	
NO.	CHECKED BY G. BENKOVICH	DEC 94

HERNANDEZ ELWOOD::2410:[DWG.STRUCT]ST045.FG871 30JAN95-10.58.20

FED. ROAD DIST. NO.	STATE	FED. AID PROJ. NO.	FISCAL YEAR	SHEET NO.	TOTAL SHEETS
HAWAII	HAW.	I-H3-1(75) UNIT III	1994	62	353

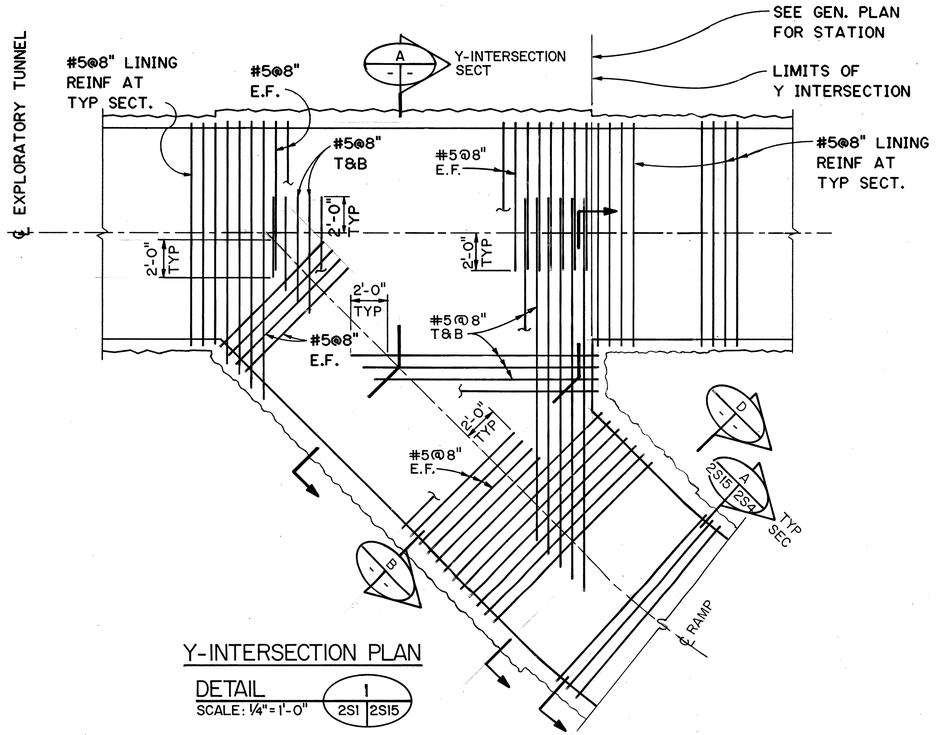

Y-INTERSECTION PLAN

DETAIL 1 (2S1 | 2S15)
SCALE: 1/4"=1'-0"

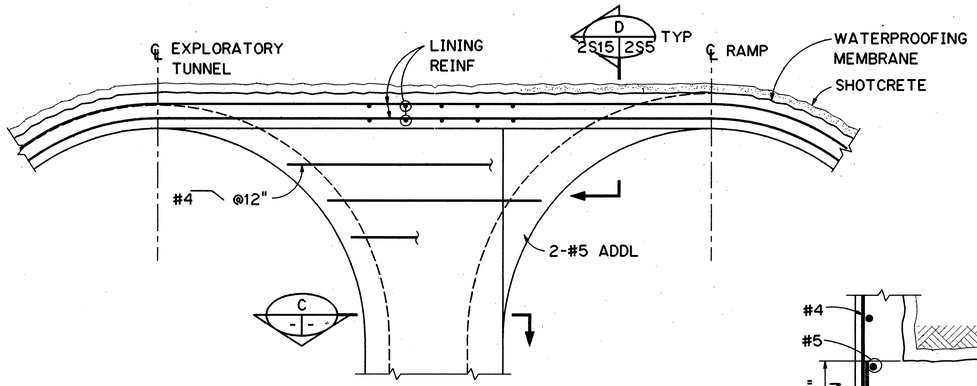

SECTION B
SCALE: 1/2"=1'-0"

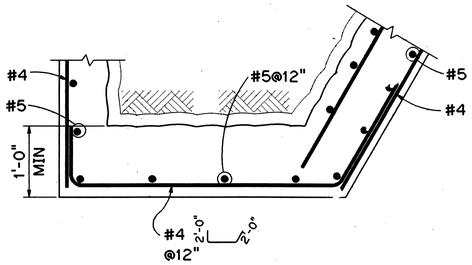

SECTION C
SCALE: 1"=1'-0"

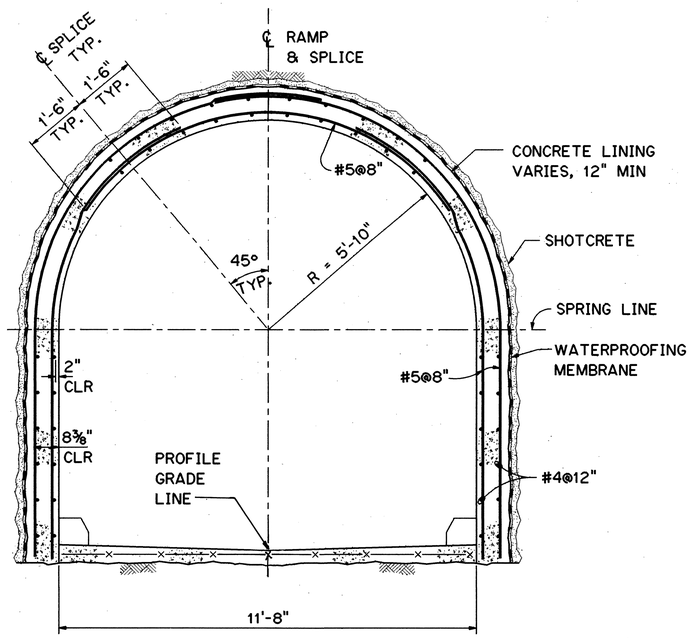

SECTION D
SCALE: 1/2"=1'-0"

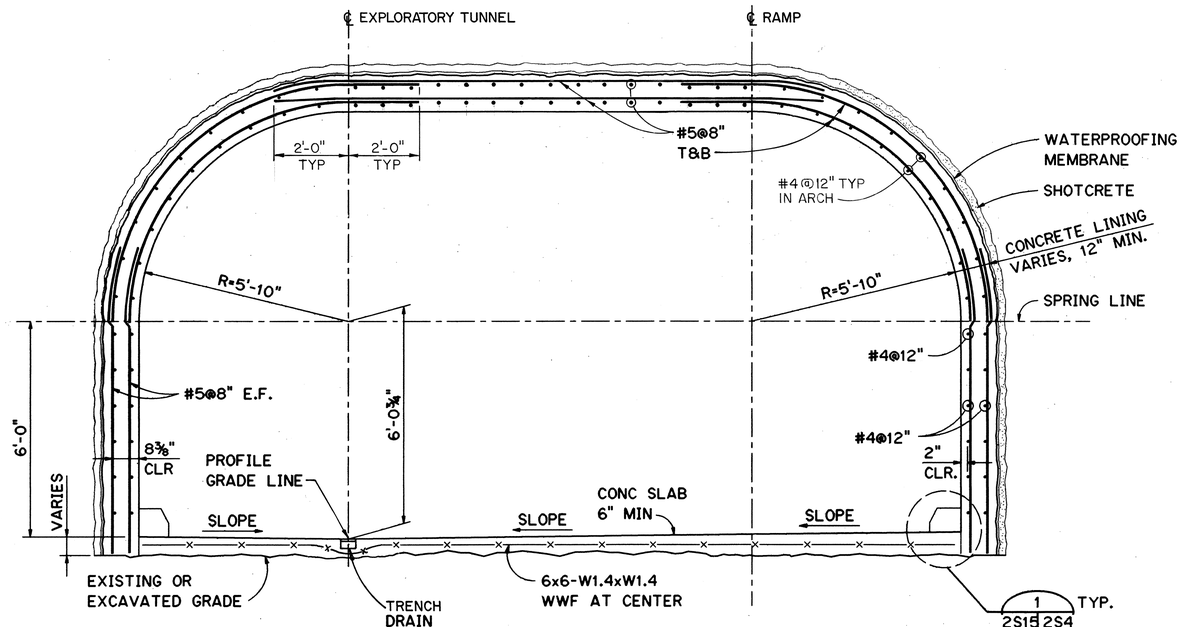

SECTION A
SCALE: 1/2"=1'-0"

NOTES:

1. FOR ADDITIONAL NOTES, SEE SHEET NO. 2S4.
2. DURING GROUTING OPERATION, PROVIDE TEMPORARY FALSEWORK SUPPORT OF THE LINING AT THE GROUT HOLE. THE SUPPORT SHALL BE DESIGNED BY THE CONTRACTOR FOR A SERVICE LOAD OF 40 KIPS.
3. THE ALLOWABLE BEARING PRESSURE AT THE Y-INTERSECTION IS 10,000 PSF.

GRAPHIC SCALES
1/4"=1'-0" (1' 0 1' 3' 5')
1/2"=1'-0" (1' 0 1' 3' 5')
1"=1'-0" (1' 0 1' 2')

PETER G. BIGGES LICENSED PROFESSIONAL ENGINEER No. 6467-S HAWAII, U.S.A.

THIS WORK WAS PREPARED BY ME OR UNDER MY SUPERVISION

DATE	REVISION
8/21/96	DCN 75-007: REV. ET DRAIN
4/18/96	DCN 75-001: CLARIFICATION OF 'PROFILE GRADE LINE' LOCATION PER RESPONSE TO RFI NO. 4097-17, REV. 1

STATE OF HAWAII
DEPARTMENT OF TRANSPORTATION
HIGHWAYS DIVISION

Y-INTERSECTION PLAN
SECTIONS AND DETAILS

EXPLORATORY TUNNEL IMPROVEMENTS
H-3 FINISH (UNIT III)
FAIP NO. I-H3-1(75), UNIT III
T.K. TUNNEL/ACCESS ROADS

SCALE: AS NOTED DATE: JUN 1995

SHEET NO. 2S15 OF 17 SHEETS

ORIGINAL PLAN		SURVEY PLOTTED BY		DATE
		DRAWN BY	R. HERNANDEZ	NOV 94
NOTE BOOK		TRACED BY		
		DESIGNED BY	L. JOHNSON	NOV 94
		QUANTITIES BY		
NO.		CHECKED BY	G. BENKOVICH	DEC 94

HERNANDEZ ELWOOD::2410:DWG.STRUCTJST046.FGB;1 30JAN95-13.55.30

FED. ROAD DIST. NO.	STATE	FED. AID PROJ. NO.	FISCAL YEAR	SHEET NO.	TOTAL SHEETS
HAWAII	HAW.	I-H3-1(75) UNIT III	1994	63	353

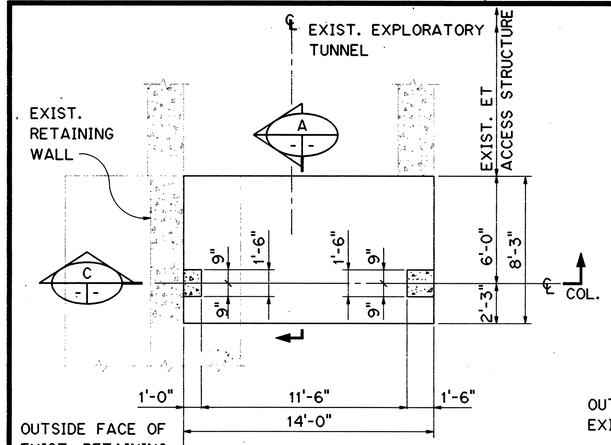

FOUNDATION PLAN
SCALE: ¼" = 1'-0"

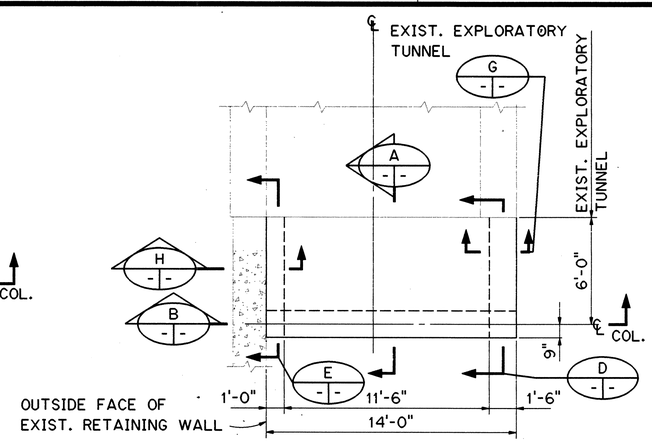

PLAN AT TOP OF TUNNEL ROOF SLAB
SCALE: ¼" = 1'-0"

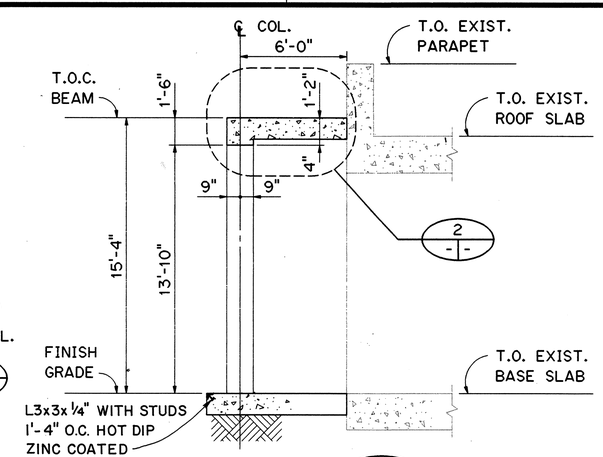

SECTION A
SCALE: ¼" = 1'-0"

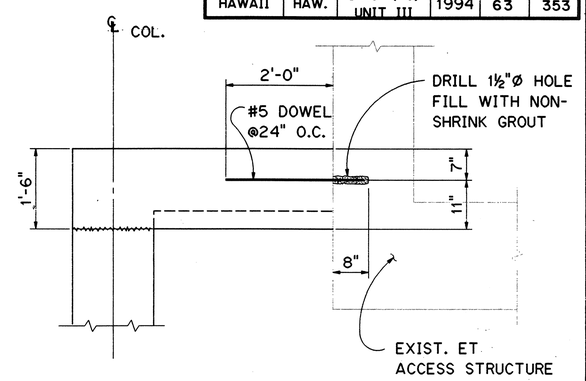

DETAIL 1
SCALE: ¾" = 1'-0"

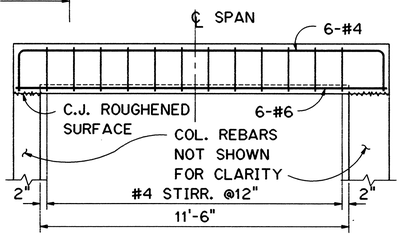

SECTION B
SCALE: ⅜" = 1'-0"

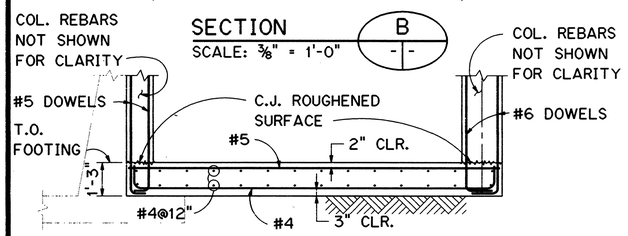

SECTION C
SCALE: ⅜" = 1'-0"

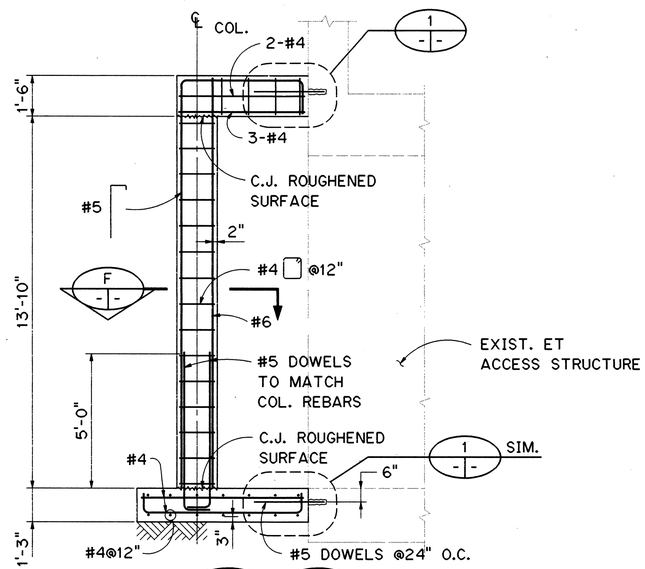

SECTION D E
SCALE: ⅜" = 1'-0"

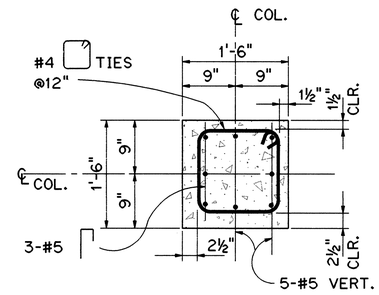

AT SECTION D

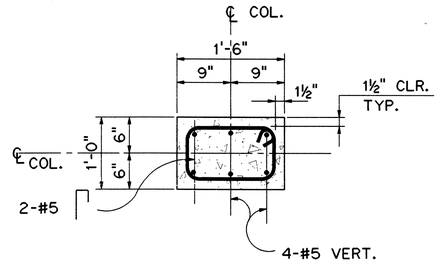

AT SECTION E

SECTION F
SCALE: 1" = 1'-0"

NOTE:

1. FOR GENERAL STRUCTURAL NOTES SEE SHEET NO. 2S4.

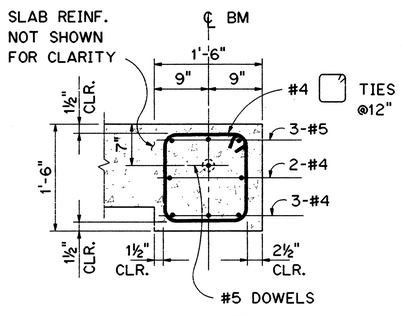

SECTION G
SCALE: 1" = 1'-0"

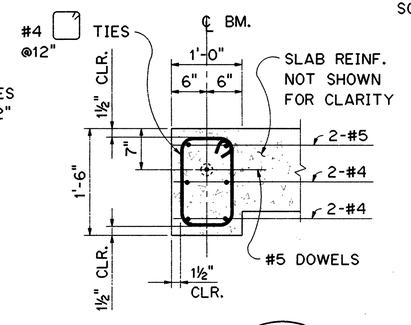

SECTION H
SCALE: 1" = 1'-0"

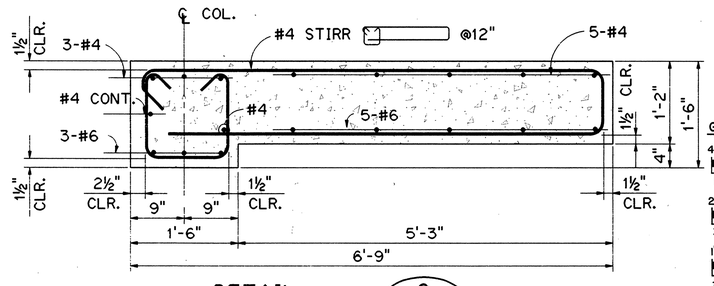

DETAIL 2
SCALE: 1" = 1'-0"

GRAPHIC SCALES

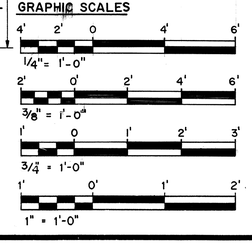

PETER G. BIBBES
LICENSED PROFESSIONAL ENGINEER
No. 6467-S
HAWAII, U.S.A.

THIS WORK WAS PREPARED BY ME OR UNDER MY SUPERVISION

DATE	REVISION
10/13/95	ADDENDUM I

STATE OF HAWAII
DEPARTMENT OF TRANSPORTATION
HIGHWAYS DIVISION

HALAWA GATE
PLANS AND SECTIONS
EXPLORATORY TUNNEL IMPROVEMENTS
H-3 FINISH (UNIT III)
FAIP NO. I-H3-1(75), UNIT III
T.K. TUNNEL/ACCESS ROADS

SCALE: AS SHOWN DATE: JUN 1995

SHEET NO. 2S16 OF 17 SHEETS

ORIGINAL PLAN		DATE
	SURVEY PLOTTED BY	
	DRAWN BY F. M. CARZON	NOV '94
NOTE BOOK	TRACED BY	" "
	DESIGNED BY G. BELIKOVICH	NOV '94
	QUANTITIES BY	" "
NO.	CHECKED BY M. S. OWYANG	DEC '94

CARZON ELWOOD::2410:[DWG.STRUCT]ST047.FGB71 26JAN95-10.54.20

ADD.63

FED. ROAD DIST. NO.	STATE	FED. AID PROJ. NO.	FISCAL YEAR	SHEET NO.	TOTAL SHEETS
HAWAII	HAW.	I-H3-1(75) UNIT III	1994	64	353

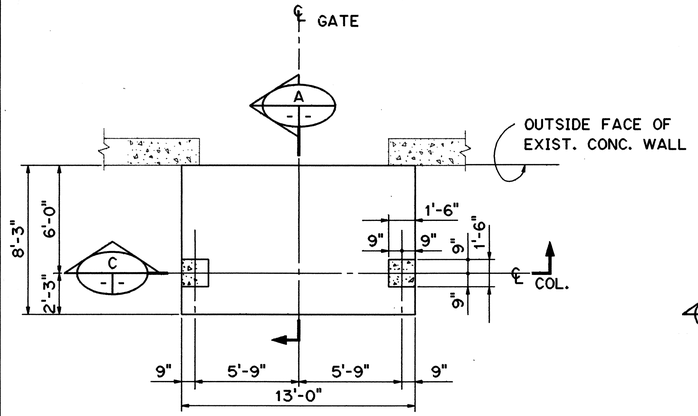

FOUNDATION PLAN
SCALE: ¼" = 1'-0"

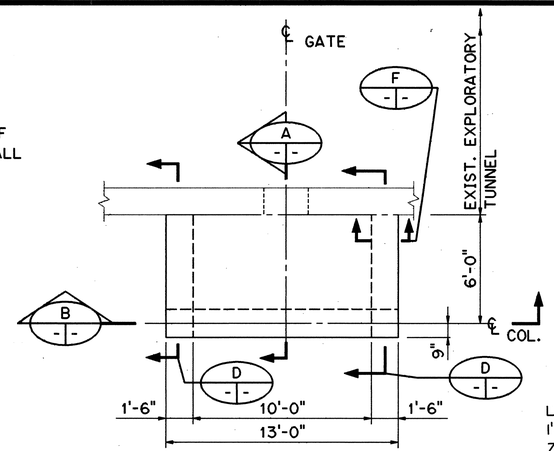

PLAN AT TOP OF CONC. BEAM
SCALE: ¼" = 1'-0"

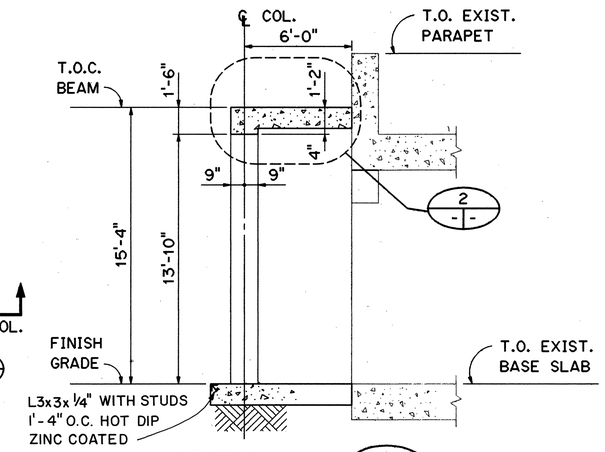

SECTION A
SCALE: ¼" = 1'-0"

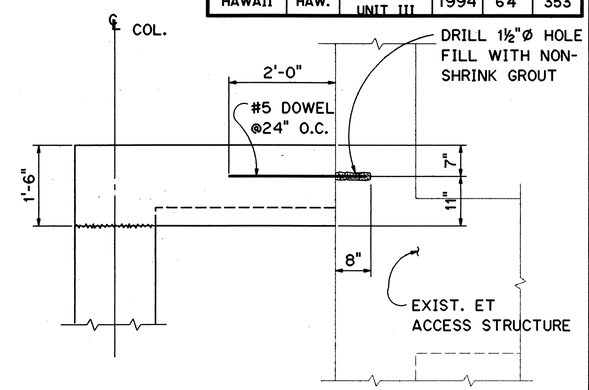

DETAIL 1
SCALE: ¾" = 1'-0"

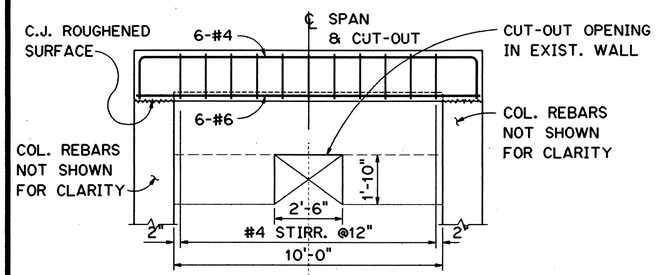

SECTION B
SCALE: ⅜" = 1'-0"

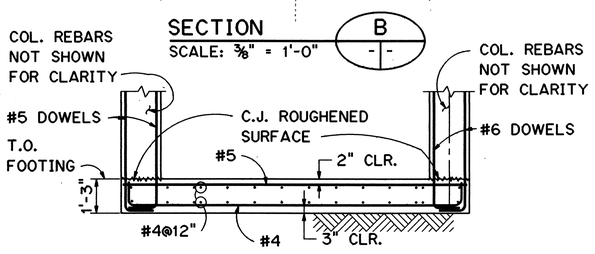

SECTION C
SCALE: ⅜" = 1'-0"

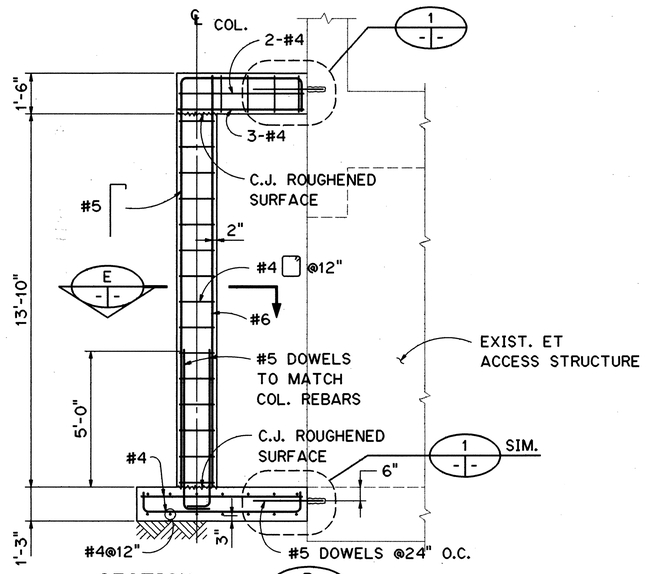

SECTION D
SCALE: ⅜" = 1'-0"

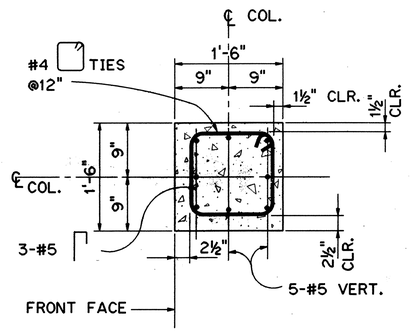

SECTION E
SCALE: 1" = 1'-0"

NOTE:

ADD PIGMENT TO CONCRETE TO MATCH COLOR OF EXISTING HAIKU PORTAL BUILDING!

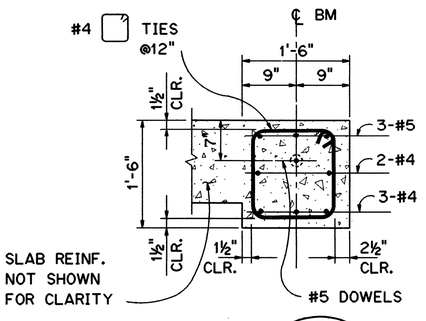

SECTION F
SCALE: 1" = 1'-0"

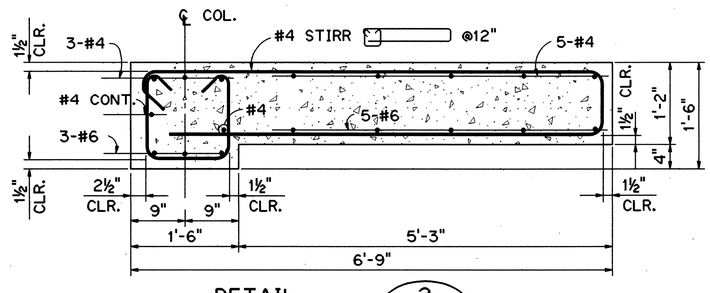

DETAIL 2
SCALE: 1" = 1'-0"

GRAPHIC SCALES

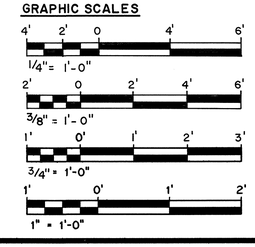

PETER G. BIBBES LICENSED PROFESSIONAL ENGINEER No. 6457-S HAWAII, U.S.A.

THIS WORK WAS PREPARED BY ME OR UNDER MY SUPERVISION

DATE	REVISION
10/13/95	ADDENDUM I

STATE OF HAWAII
DEPARTMENT OF TRANSPORTATION
HIGHWAYS DIVISION

HAIKU GATE

PLANS AND SECTIONS

EXPLORATORY TUNNEL IMPROVEMENTS
H-3 FINISH (UNIT III)
FAIP NO. I-H3-1(75), UNIT III
T.K. TUNNEL/ACCESS ROADS

SCALE: AS SHOWN DATE: JUN 1995

SHEET NO. 2S17 OF 17 SHEETS

ORIGINAL PLAN		DATE
	SURVEY PLOTTED BY	
	DRAWN BY F. M. CARZON	NOV 94
NOTE BOOK	TRACED BY	
	DESIGNED BY G. BENKOVICH	NOV 94
	QUANTITIES BY	
NO.	CHECKED BY M. S. OWYANG	DEC 94

CARZON ELWOOD::2410:[DWG.STRUCT]ST048.FGB71 26JAN95-13:57:30

ADD.64

FED. ROAD DIST. NO.	STATE	FED. AID PROJ. NO.	FISCAL YEAR	SHEET NO.	TOTAL SHEETS
HAWAII	HAW.	I-H3-1(75) UNIT III	1994	65	353

FAN SCHEDULE

EQUIPMENT NUMBER	SERVICE	ARRANGEMENT	CLASS	DRIVE	WHEEL DIAMETER (INCHES)	WHEEL TYPE	WHEEL RPM	PERFORMANCE AIR CAPACITY ACFM	PERFORMANCE STATIC H_2O PRESS IN.	MOTOR NAME PLATE HP	MOTOR RPM	MOTOR VOLTS	MOTOR PHASE	MOTOR HERTZ	ISOLATOR BASE TYPE	ISOLATOR BASE STATIC DEFLEC IN.	REMARKS
EF-101	EXPLORATORY TUNNEL EXHAUST FAN HALAWA PORTAL	9	-	BELT	21.25	AXIAL	-	9100	2.0	7.5	-	460	3	60	-	-	
EF-102	EXPLORATORY TUNNEL EXHAUST FAN HAIKU PORTAL	9	-	BELT	21.25	AXIAL	-	8300	4.0	10	-	460	3	60	-	-	
EF-105	ELEVATOR MACHINE ROOM CROSS PASSAGE NO. 1	-	-	DIRECT	-	CENTRIFUGAL IN-LINE	-	585	0.375	⅛	-	115	1	60	-	-	OWNER FURNISHED
EF-106	ELEVATOR MACHINE ROOM CROSS PASSAGE NO. 3	-	-	DIRECT	-	CENTRIFUGAL IN-LINE	-	585	0.375	⅛	-	115	1	60	-	-	OWNER FURNISHED
EF-107	ELEVATOR MACHINE ROOM CROSS PASSAGE NO. 5	-	-	DIRECT	-	CENTRIFUGAL IN-LINE	-	585	0.375	⅛	-	115	1	60	-	-	OWNER FURNISHED
EF-108	ELEVATOR MACHINE ROOM CROSS PASSAGE NO. 7	-	-	DIRECT	-	CENTRIFUGAL IN-LINE	-	585	0.375	⅛	-	115	1	60	-	-	OWNER FURNISHED
EF-109	ELEVATOR MACHINE ROOM CROSS PASSAGE NO. 9	-	-	DIRECT	-	CENTRIFUGAL IN-LINE	-	585	0.375	⅛	-	115	1	60	-	-	OWNER FURNISHED

FOR DETAIL AS-BUILT INFORMATION
REFER TO CONSTRUCTION SUBMITTALS

DATE	REVISION

ORIGINAL PLAN
NOTE BOOK NO.

		DATE
SURVEY PLOTTED BY		
DRAWN BY	W.P. AGUILAR	OCT 94
TRACED BY		
DESIGNED BY	D.E. DRYDEN	OCT 94
QUANTITIES BY		
CHECKED BY	K.J. HARRIS	JAN 95

KENNETH J. HARRIS
LICENSED PROFESSIONAL ENGINEER
No. 7707-M
HAWAII, U.S.A.

THIS WORK WAS PREPARED BY ME OR UNDER MY SUPERVISION

STATE OF HAWAII
DEPARTMENT OF TRANSPORTATION
HIGHWAYS DIVISION

VENTILATION EQUIPMENT SCHEDULE

EXPLORATORY TUNNEL IMPROVEMENTS
H-3 FINISH (UNIT III)
FAIP NO. I-H3-1(75), UNIT III
T.K. TUNNEL/ACCESS ROADS

SCALE: NONE DATE: JUN 1995

SHEET NO. 2M1 OF 8 SHEETS

AGUILAR 2410:[DWG.MECH]MT021.FGB;1 27JAN95-14.18.00

FED. ROAD DIST. NO.	STATE	FED. AID PROJ. NO.	FISCAL YEAR	SHEET NO.	TOTAL SHEETS
HAWAII	HAW.	I-H3-1(75) UNIT III	1994	66	353

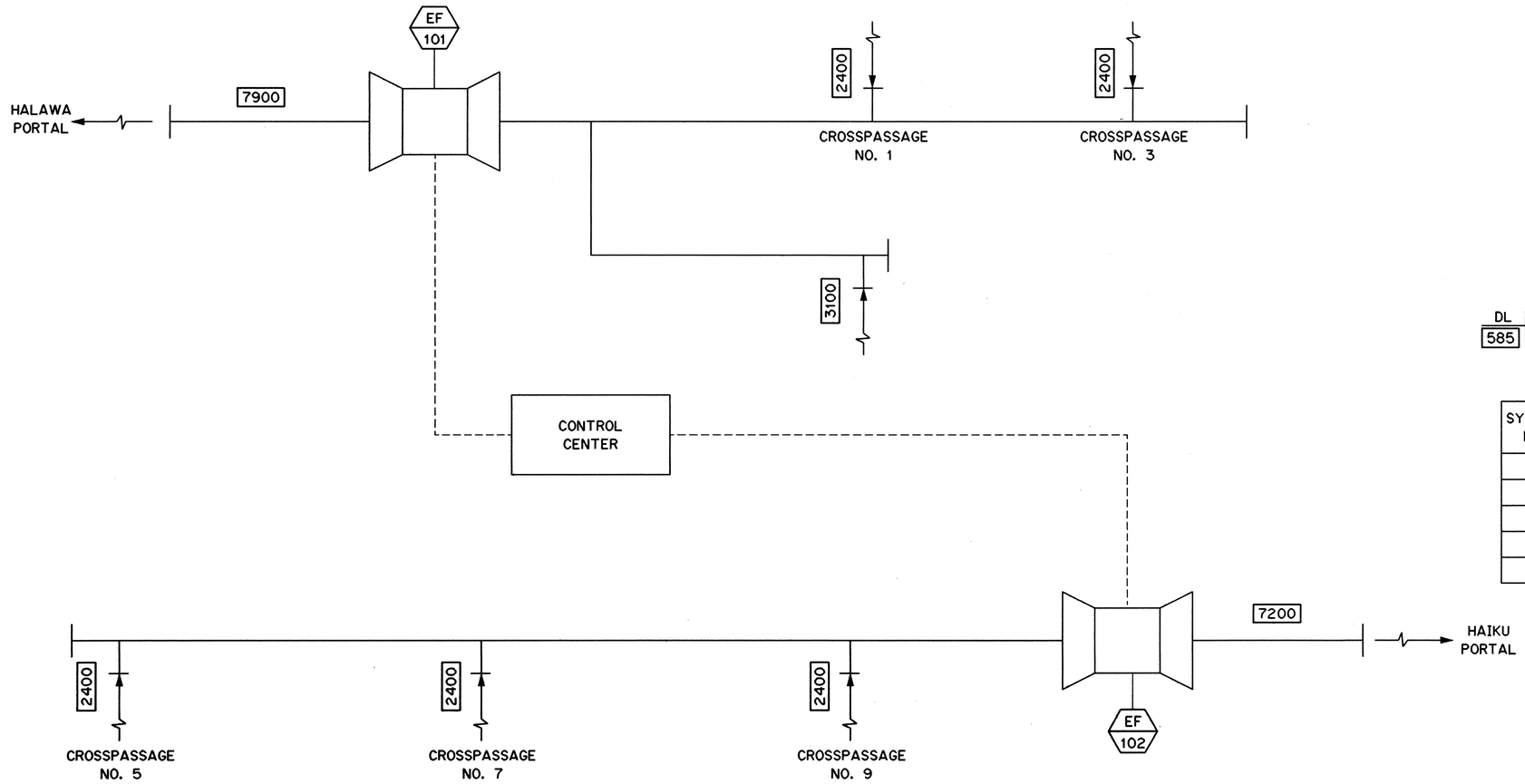

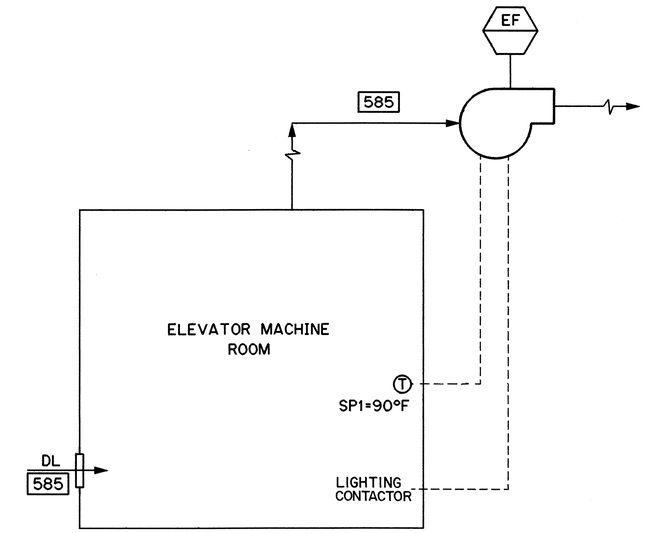

SYSTEM NO.	CROSS PASSAGE NO.	EF EXHAUST FAN NO.	T THERMOSTAT NO.
4	1	105	5
5	3	106	6
6	5	107	7
7	7	108	8
8	9	109	9

NOTE

1. FOR EXHAUST FAN DATA REFER TO SHEET NO. 2M1.

LEGEND

XXX AIR FLOW CFM

ITC-CC7(EF-101), ITC-XT10(EF-102)

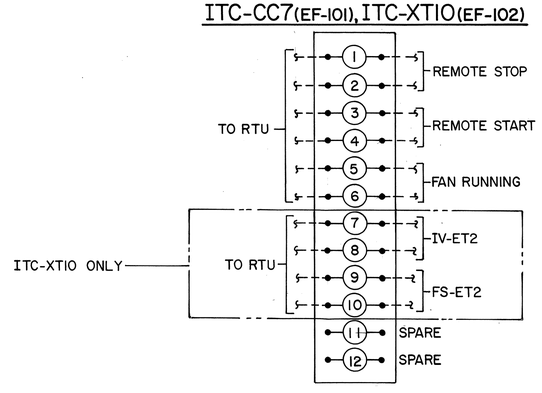

ITC-XT1(EF-105), ITC-XT3(EF-106), ITC-XT5(EF-107), ITC-XT7(EF-108), ITC-XT9(EF-109)

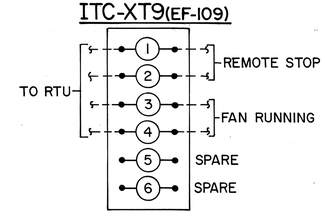

10/27/95	ADDENDUM 2-ADDED ITC DIAGRAMS
DATE	REVISION

STATE OF HAWAII
DEPARTMENT OF TRANSPORTATION
HIGHWAYS DIVISION

AIR FLOW AND CONTROL DIAGRAM

EXPLORATORY TUNNEL IMPROVEMENTS
H-3 FINISH (UNIT III)
FAIP NO. I-H3-1(75), UNIT III
T.K. TUNNEL/ACCESS ROADS

SCALE: NONE DATE: JUN 1995

KENNETH J. HARRIS LICENSED PROFESSIONAL ENGINEER No. 7707-M HAWAII, U.S.A.

THIS WORK WAS PREPARED BY ME OR UNDER MY SUPERVISION

SHEET NO. 2M2 OF 8 SHEETS

ORIGINAL PLAN		SURVEY PLOTTED BY		DATE
		DRAWN BY	W.P. AGUILAR	OCT 94
		TRACED BY		
		DESIGNED BY	D.E. DRYDEN	OCT 94
NOTE BOOK		QUANTITIES BY		
NO.		CHECKED BY	K.J. HARRIS	DEC 94

DAVIS SF030A:::2410:DWG.MECHJMT022.FGB71 31JAN95-13.09.30

FED. ROAD DIST. NO.	STATE	FED. AID PROJ. NO.	FISCAL YEAR	SHEET NO.	TOTAL SHEETS
HAWAII	HAW.	I-H3-1(75) UNIT III	1994	67	353

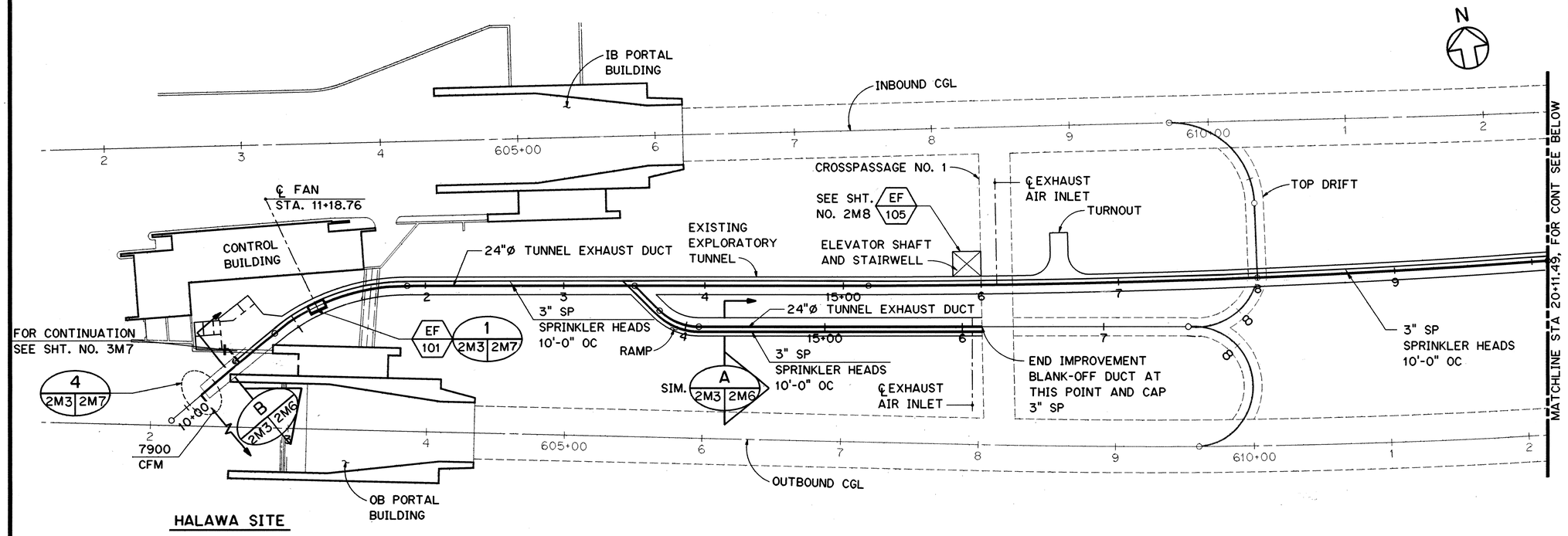

HALAWA SITE

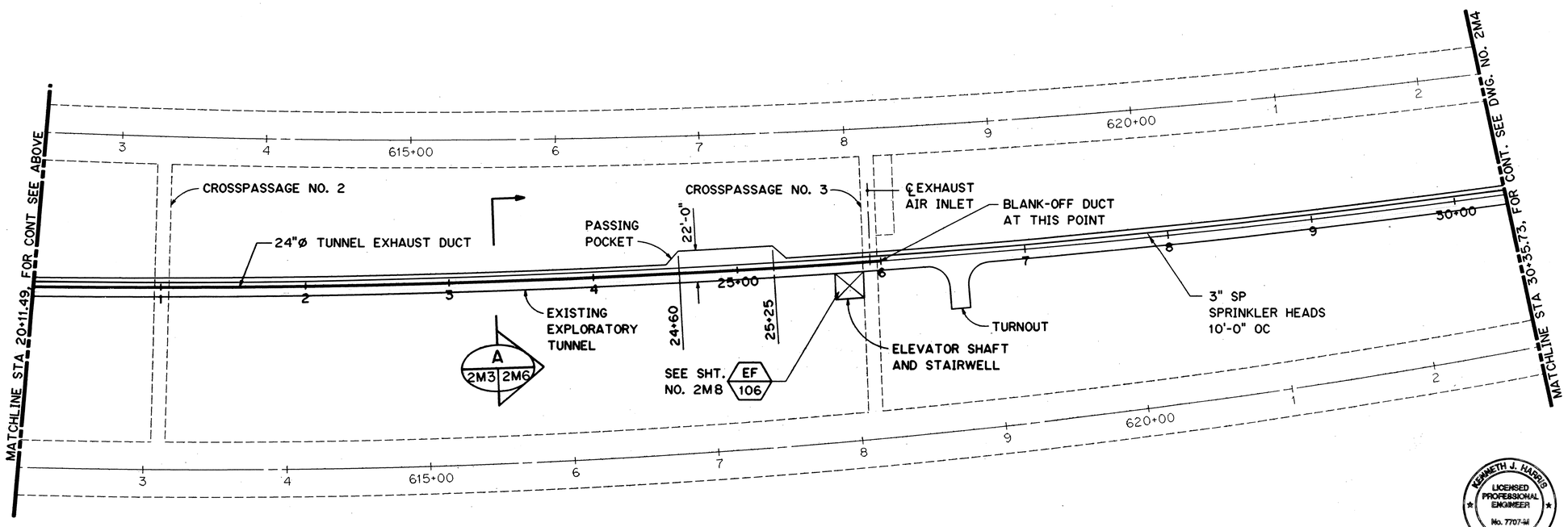

PARTIAL PLAN - EXPLORATORY TUNNEL

GRAPHIC SCALE
40' 0' 40' 80'
1" = 40'

KENNETH J. HARRIS
LICENSED PROFESSIONAL ENGINEER
No. 7707-II
HAWAII, U.S.A.

THIS WORK WAS PREPARED BY ME OR UNDER MY SUPERVISION

DATE	REVISION
10/13/95	ADDENDUM I

STATE OF HAWAII
DEPARTMENT OF TRANSPORTATION
HIGHWAYS DIVISION

VENTILATION AND PIPING PLAN - 1

EXPLORATORY TUNNEL IMPROVEMENTS

H-3 FINISH (UNIT III)
FAIP NO. I-H3-1(75), UNIT III
T.K. TUNNEL/ACCESS ROADS

SCALE: 1" = 40' DATE: JUN 1995

SHEET NO. 2M3 OF 8 SHEETS

		DATE
SURVEY PLOTTED BY	W.P. AGUILAR	NOV 94
DRAWN BY	" "	"
TRACED BY	" "	"
DESIGNED BY	D.E. DRYDEN	NOV 94
QUANTITIES BY	" "	"
CHECKED BY	K.J. HARRIS	JAN 95

ORIGINAL PLAN
NOTE BOOK
NO.

ADD. 67

FED. ROAD DIST. NO.	STATE	FED. AID PROJ. NO.	FISCAL YEAR	SHEET NO.	TOTAL SHEETS
HAWAII	HAW.	I-H3-1(75) UNIT III	1994	68	353

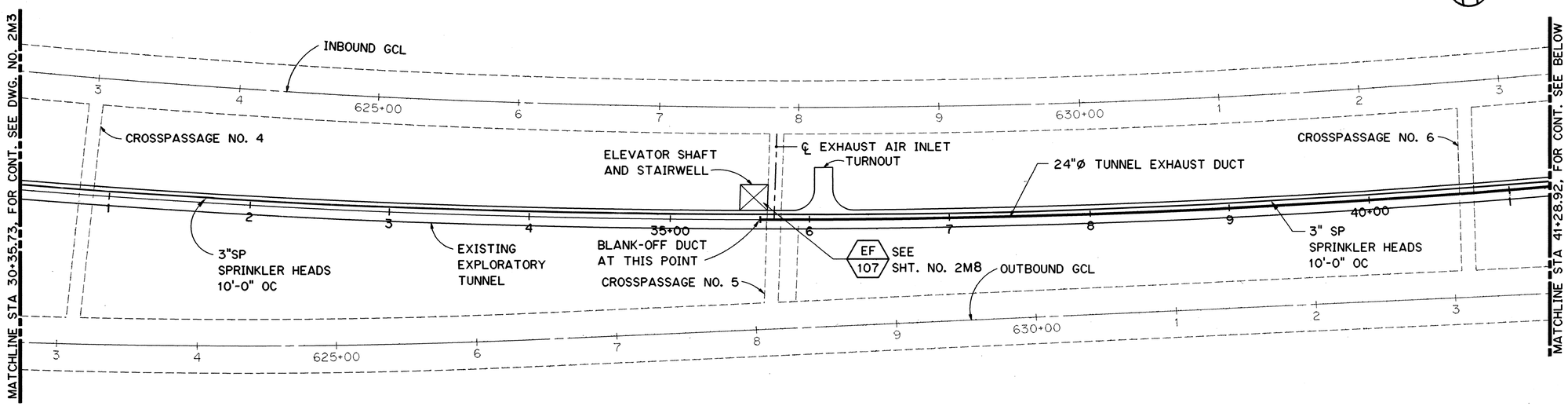

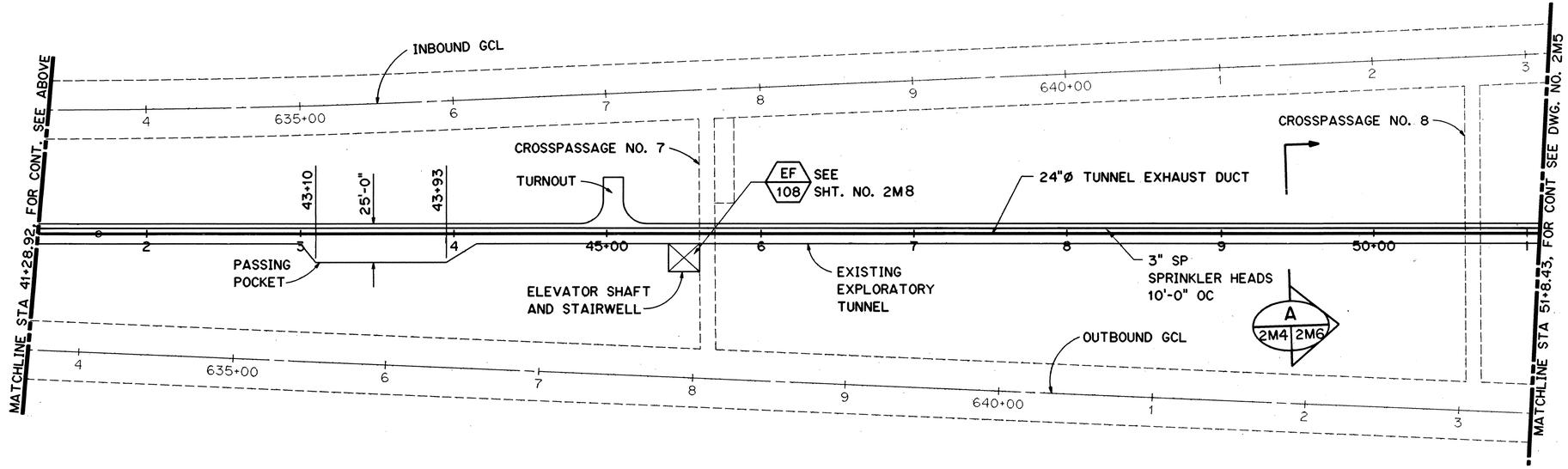

PARTIAL PLAN - EXPLORATORY TUNNEL

GRAPHIC SCALE
40' 0' 40' 80'
1" = 40'

KENNETH J. HARRIS LICENSED PROFESSIONAL ENGINEER No. 7707-II HAWAII, U.S.A.

THIS WORK WAS PREPARED BY ME OR UNDER MY SUPERVISION

	DATE	REVISION
SURVEY PLOTTED BY	M.P. AGUILAR	NOV 94
DRAWN BY	"	"
TRACED BY	"	"
DESIGNED BY	D.E. DRYDEN	NOV 94
QUANTITIES BY	"	"
CHECKED BY	K.J. HARRIS	JAN 95
ORIGINAL PLAN		
NOTE BOOK		
NO.		

STATE OF HAWAII
DEPARTMENT OF TRANSPORTATION
HIGHWAYS DIVISION

VENTILATION AND PIPING PLAN - 2

EXPLORATORY TUNNEL IMPROVEMENTS
H-3 FINISH (UNIT III)
FAIP NO. I-H3-1(75), UNIT III
T.K. TUNNEL/ACCESS ROADS

SCALE: 1" = 40' DATE: JUN 1995

SHEET NO. 2M4 OF 8 SHEETS

DAVIS SF030A:::2410:DWG.MECHJMT025.FGB71 31JAN95-13.22.30

FED. ROAD DIST. NO.	STATE	FED. AID PROJ. NO.	FISCAL YEAR	SHEET NO.	TOTAL SHEETS
HAWAII	HAW.	I-H3-1(75) UNIT III	1994	69	353

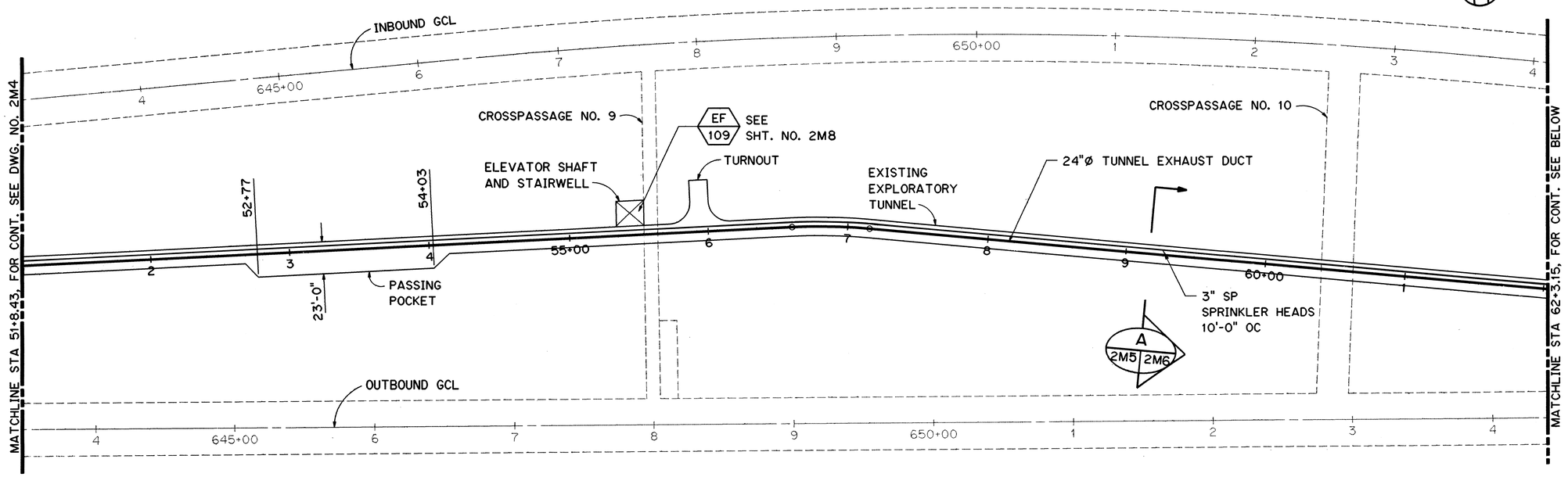

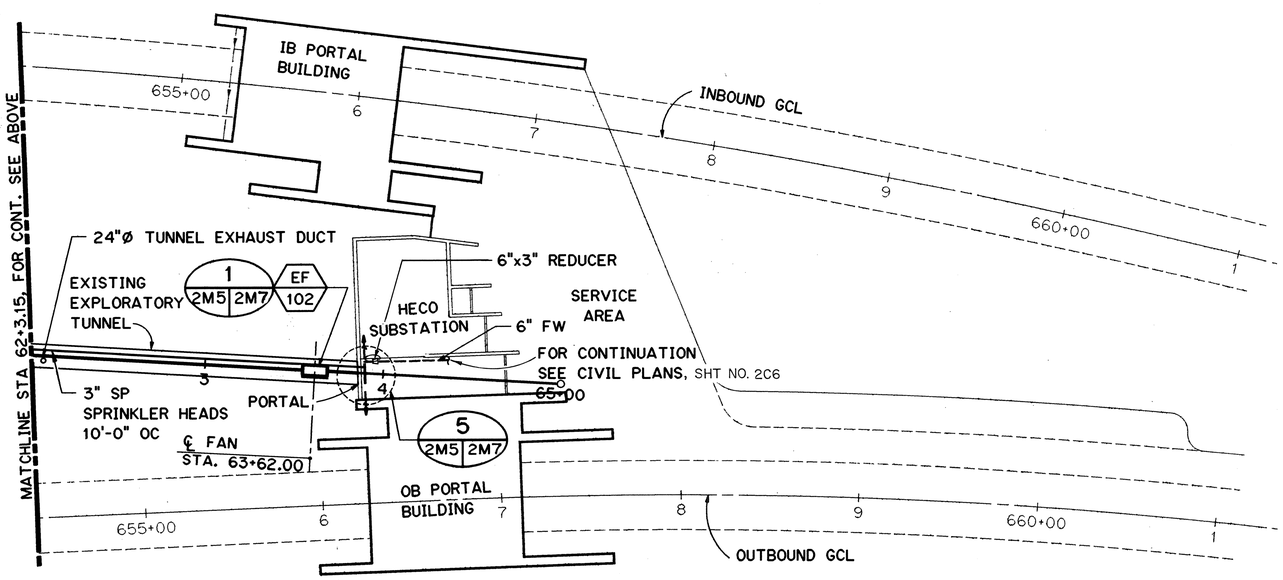

HAIKU SITE

PARTIAL PLAN - EXPLORATORY TUNNEL

GRAPHIC SCALE
40' 0' 40' 80'
1" = 40'

KENNETH J. HARRIS LICENSED PROFESSIONAL ENGINEER No. 7707-M HAWAII, U.S.A.

THIS WORK WAS PREPARED BY ME OR UNDER MY SUPERVISION

DATE	REVISION

STATE OF HAWAII
DEPARTMENT OF TRANSPORTATION
HIGHWAYS DIVISION

VENTILATION AND PIPING PLAN - 3

EXPLORATORY TUNNEL IMPROVEMENTS
H-3 FINISH (UNIT III)
FAIP NO. I-H3-1(75), UNIT III
T.K. TUNNEL/ACCESS ROADS

SCALE: 1" = 40' DATE: JUN 1995

SHEET NO. 2M5 OF 8 SHEETS

ORIGINAL PLAN		DATE
	SURVEY PLOTTED BY	
	DRAWN BY M.P. AGUILAR	NOV 94
	TRACED BY	
	DESIGNED BY D.E. DRYDEN	NOV 94
NOTE BOOK	QUANTITIES BY	
	CHECKED BY K.J. HARRIS	JAN 95
NO.		

DAVIS SF030A:::2410:DWG.MECHJMT026.FGB71 31JAN95-13.37.20

FED. ROAD DIST NO.	STATE	FED. AID PROJ NO.	FISCAL YEAR	SHEET NO	TOTAL SHEETS
HAWAII	HAW.	I-H3-1(75) UNIT III	1994	70	353

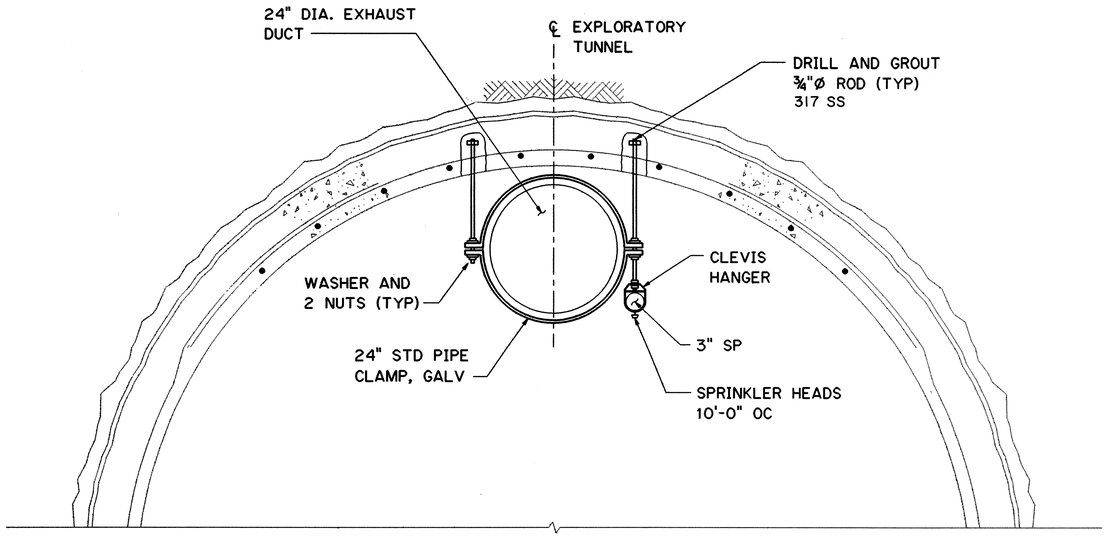

TYPICAL EXHAUST DUCT/SP

SECTION A
SCALE: 1" = 1'-0"
2M3 2M6
2M4
2M5

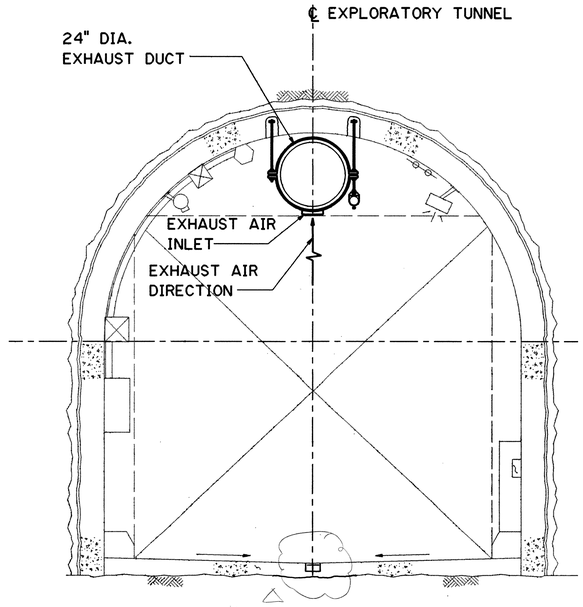

TYPICAL FIXTURE ARRANGEMENT

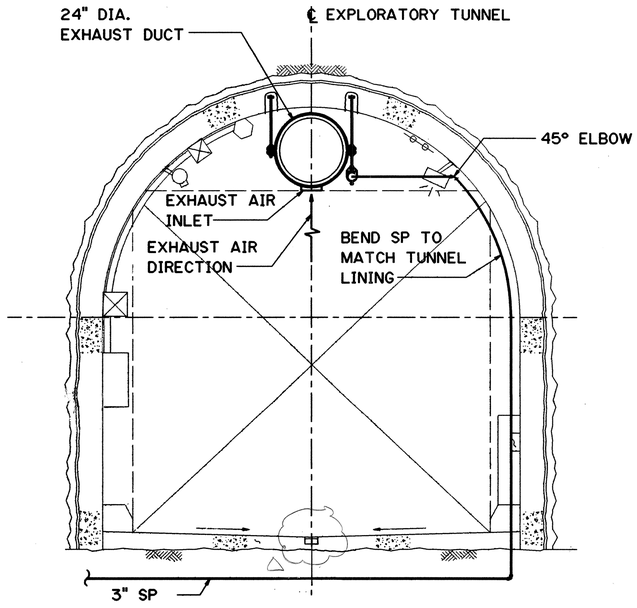

SECTION B
SCALE: ½" = 1'-0"
2M3 2M6

GRAPHIC SCALE
2' 1' 0' 2' 4'
½" = 1'-0"
1' 0' 1' 2'
1" = 1'-0"

KENNETH J. HARRIS
LICENSED PROFESSIONAL ENGINEER
No. 7707-M
HAWAII, U.S.A.

THIS WORK WAS PREPARED BY ME OR UNDER MY SUPERVISION

DATE	REVISION
9/ 3 /96	DCN75-007: REV. ET DRAIN
10/13/95	ADDENDUM I

STATE OF HAWAII
DEPARTMENT OF TRANSPORTATION
HIGHWAYS DIVISION

VENTILATION AND PIPING SECTIONS

EXPLORATORY TUNNEL IMPROVEMENTS
H-3 FINISH (UNIT III)
FAIP NO. I-H3-1(75), UNIT III
T.K. TUNNEL/ACCESS ROADS

SCALE: AS NOTED DATE: JUN 1995

SHEET NO. 2M6 OF 8 SHEETS

ADD. 70

		DATE
SURVEY PLOTTED BY		
DRAWN BY	S. SUNYI	NOV 94
TRACED BY	"	NOV 94
DESIGNED BY	D. DRYDEN	NOV 94
QUANTITIES BY	"	
CHECKED BY	K. HARRIS	DEC 94

ORIG. IAL PLAN
NOTE BOOK
NO.

DAVIS SF030A:::2410:[DWG.MECH]MT027.FGB;1 31JAN95-13.40.40

FED. ROAD DIST. NO.	STATE	FED. AID PROJ. NO.	FISCAL YEAR	SHEET NO.	TOTAL SHEETS
HAWAII	HAW.	I-H3-1(75) UNIT III	1994	71	353

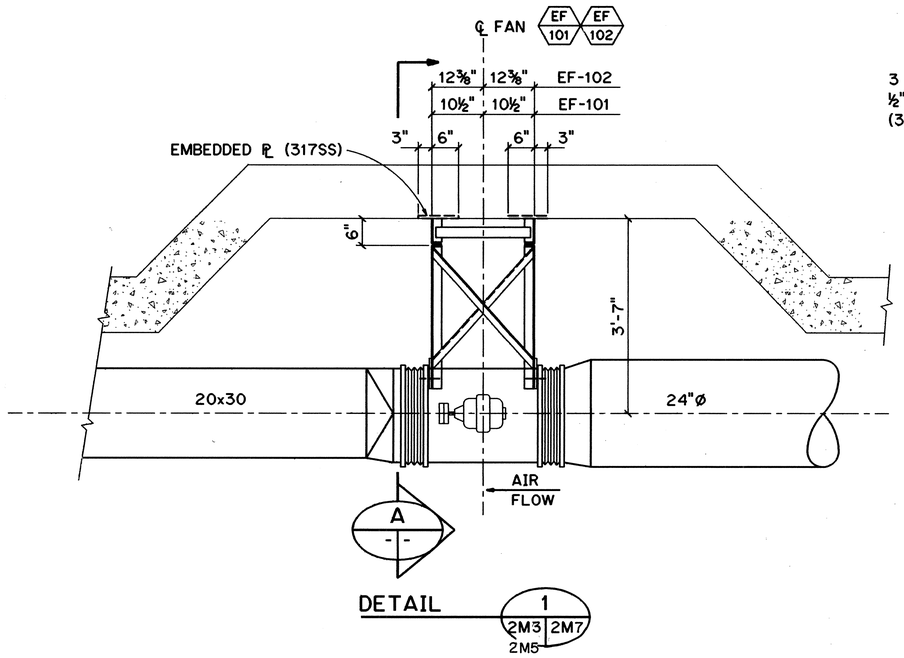

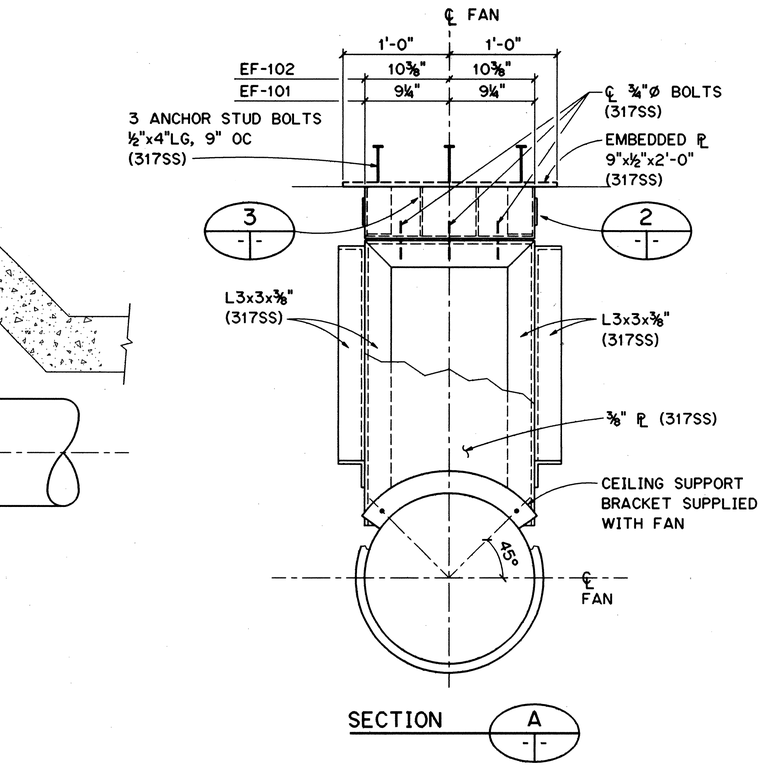

NOTES

1. FAN MOTOR MAY BE MOUNTED ON EITHER SIDE OF FAN ON HORIZONTAL AXIS.
2. VERIFY ALL DIMENIONS WITH FAN MANUFACTURER PRIOR TO FABRICATION.
3. FOR DUCT SUPPORT DETAILS SEE SHT. NO. 3M9.

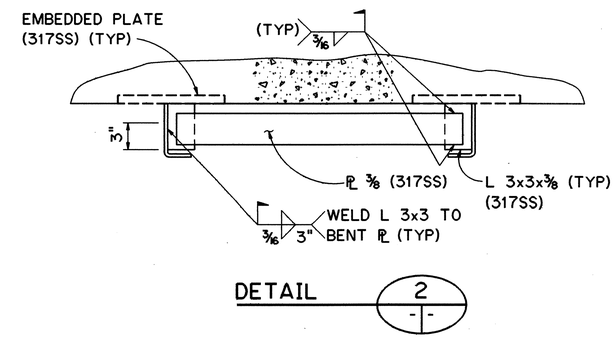

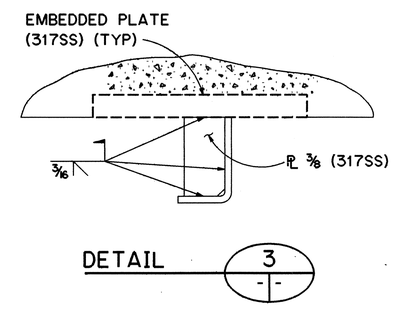

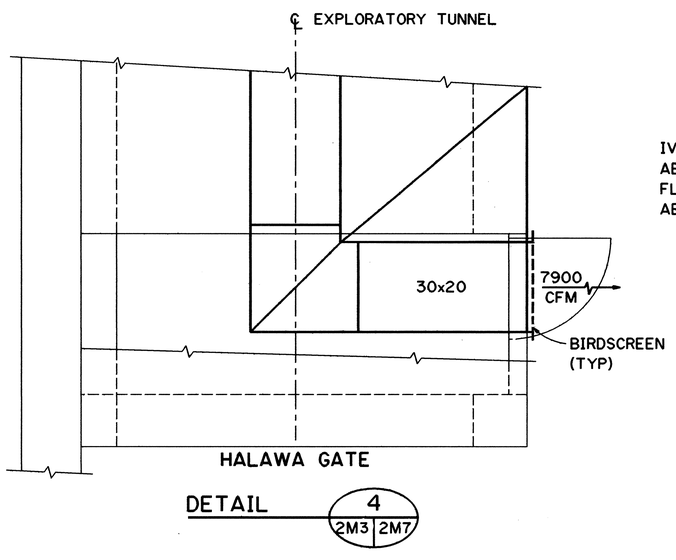

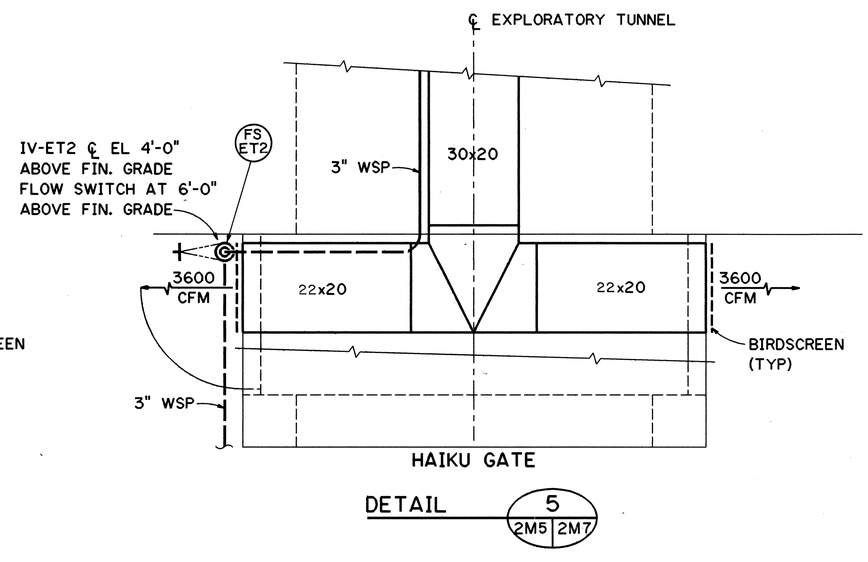

10/13/95	ADDENDUM I
DATE	REVISION

STATE OF HAWAII
DEPARTMENT OF TRANSPORTATION
HIGHWAYS DIVISION

VENTILATION AND PIPING DETAILS

EXPLORATORY TUNNEL IMPROVEMENTS

H-3 FINISH (UNIT III)

FAIP NO. I-H3-1(75), UNIT III

T.K. TUNNEL/ACCESS ROADS

SCALE: NONE DATE: JUN 1995

KENNETH J. HARRIS LICENSED PROFESSIONAL ENGINEER No. 7707-M HAWAII, U.S.A.

THIS WORK WAS PREPARED BY ME OR UNDER MY SUPERVISION

SHEET NO. 2M7 OF 8 SHEETS

		DATE
SURVEY PLOTTED BY		
DRAWN BY	CAD	NOV 94
TRACED BY		
DESIGNED BY	D.E. DRYDEN	OCT 94
QUANTITIES BY		
CHECKED BY	K.J. HARRIS	JAN 95

ORIGINAL PLAN
NOTE BOOK
NO.

DAVIS SF030A:::2410:[DWG.MECHJMT028.FGB71 28JAN95-14.34.30

ADD. 71

FED. ROAD DIST. NO.	STATE	FED. AID PROJ. NO.	FISCAL YEAR	SHEET NO.	TOTAL SHEETS
HAWAII	HAW.	I-H3-1(75) UNIT III	1994	72	353

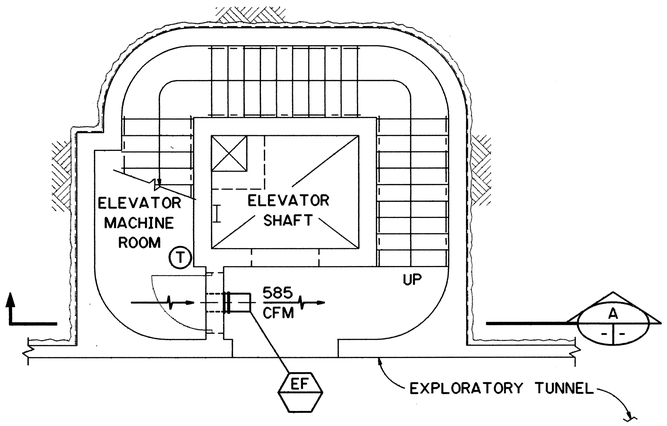

PLAN AT EXPLORATORY TUNNEL

CROSSPASSAGE NOS. 1, 5, & 9 SHOWN
CROSSPASSAGE NOS. 3 & 7 OPPOSITE HAND

SYSTEM NO.	CROSS PASSAGE NO.	EF EXHAUST FAN NO.	T THERMOSTAT NO.
4	1	105	5
5	3	106	6
6	5	107	7
7	7	108	8
8	9	109	9

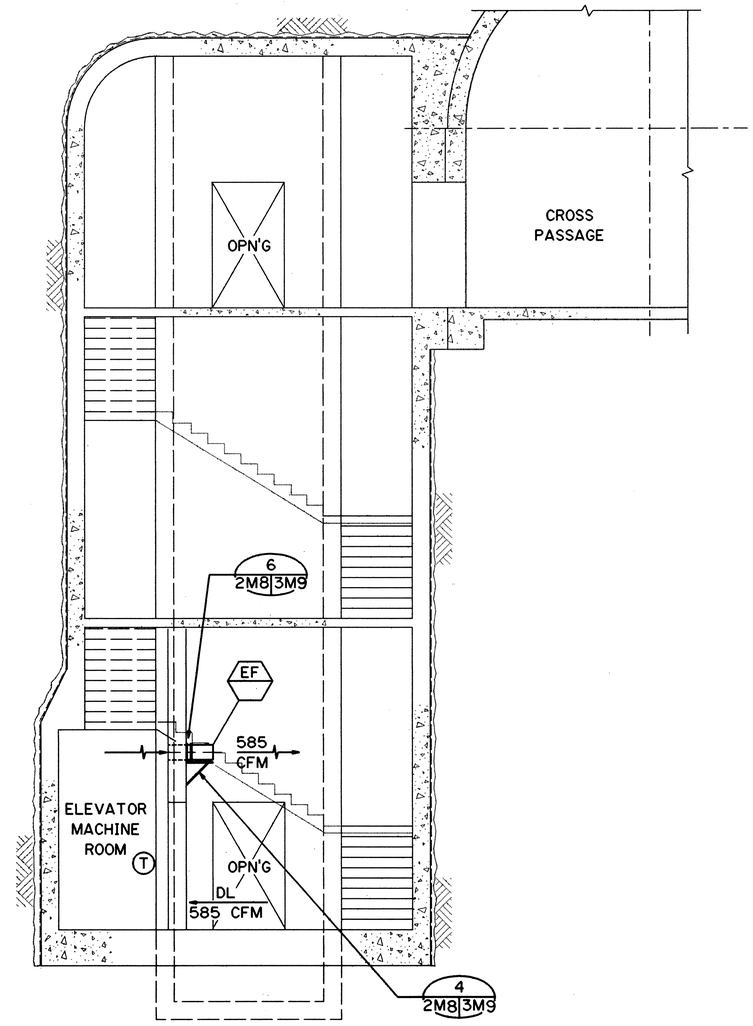

SECTION A - -

NOTE

1. FOR EXHAUST FAN EQUIPMENT DATA SEE SHEET NO. 2M1.

GRAPHIC SCALE
4' 2' 0' 4' 8'
¼" = 1'-0"

KENNETH J. HARRIS
LICENSED PROFESSIONAL ENGINEER
No. 7707-M
HAWAII, U.S.A.

THIS WORK WAS PREPARED BY ME OR UNDER MY SUPERVISION

DATE	REVISION

STATE OF HAWAII
DEPARTMENT OF TRANSPORTATION
HIGHWAYS DIVISION

CROSSPASSAGE ELEVATOR MACHINE ROOM VENTILATION

EXPLORATORY TUNNEL IMPROVEMENTS
H-3 FINISH (UNIT III)
FAIP NO. I-H3-1(75), UNIT III
T.K. TUNNEL/ACCESS ROADS

SCALE: 1/4"=1'-0" DATE: JUN 1995

SHEET NO. 2M8 OF 8 SHEETS

72

ORIGINAL PLAN		DATE
	SURVEY PLOTTED BY	
	DRAWN BY CAD	JAN 95
	TRACED BY	
NOTE BOOK	DESIGNED BY D.E.DRYDEN	JAN 95
	QUANTITIES BY	
NO.	CHECKED BY R.J.HARRIS	JAN 95

DAVIS SF030A:::2410:[DWG.MECHJMT029.FGB]1 31JAN95-13.54.20

FED. ROAD DIST. NO.	STATE	FED. AID PROJ. NO.	FISCAL YEAR	SHEET NO.	TOTAL SHEETS
HAWAII	HAW.	I-H3-1(75) UNIT III	1994	74	353

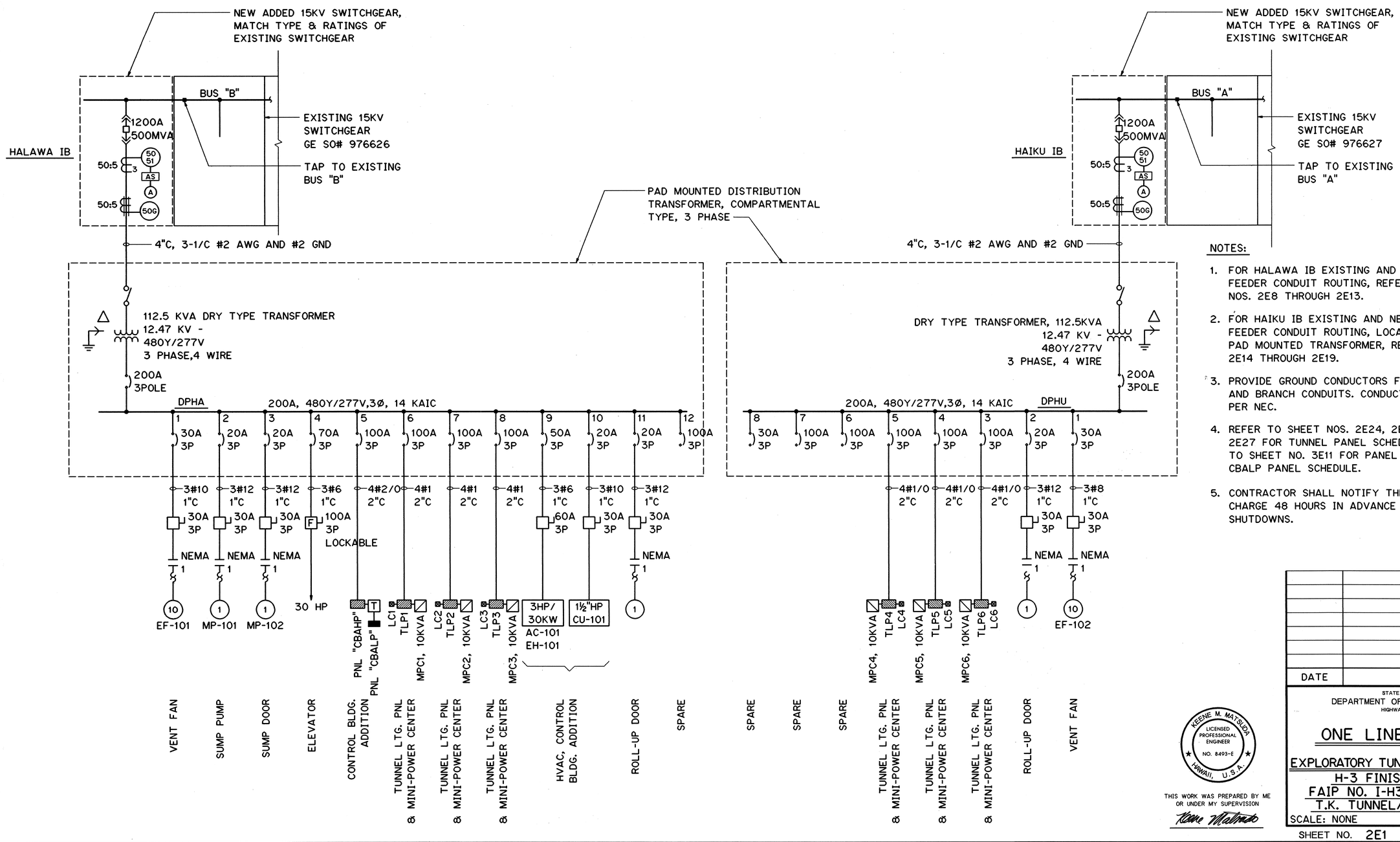

NOTES:

1. FOR HALAWA IB EXISTING AND NEW 12.47KV FEEDER CONDUIT ROUTING, REFER TO SHEET NOS. 2E8 THROUGH 2E13.
2. FOR HAIKU IB EXISTING AND NEW 12.47KV FEEDER CONDUIT ROUTING, LOCATION OF NEW PAD MOUNTED TRANSFORMER, REFER TO SHEET NOS. 2E14 THROUGH 2E19.
3. PROVIDE GROUND CONDUCTORS FOR ALL FEEDERS AND BRANCH CONDUITS. CONDUCTOR SIZES AS PER NEC.
4. REFER TO SHEET NOS. 2E24, 2E25, 2E26 AND 2E27 FOR TUNNEL PANEL SCHEDULES. REFER TO SHEET NO. 3E11 FOR PANEL CBAHP AND CBALP PANEL SCHEDULE.
5. CONTRACTOR SHALL NOTIFY THE ENGINEER IN CHARGE 48 HOURS IN ADVANCE OF ALL POWER SHUTDOWNS.

DATE	REVISION

KEENE M. MATSUDA
LICENSED PROFESSIONAL ENGINEER
NO. 8493-E
HAWAII, U.S.A.

THIS WORK WAS PREPARED BY ME OR UNDER MY SUPERVISION

STATE OF HAWAII
DEPARTMENT OF TRANSPORTATION
HIGHWAYS DIVISION

ONE LINE DIAGRAM

EXPLORATORY TUNNEL IMPROVEMENTS
H-3 FINISH (UNIT III)
FAIP NO. I-H3-1(75), UNIT III
T.K. TUNNEL/ACCESS ROADS

SCALE: NONE DATE: JUN 1995

SHEET NO. 2E1 OF 30 SHEETS

ORIGINAL PLAN	SURVEY PLOTTED BY R. J. HERNANDEZ DATE NOV 94
	PLOTTED BY " " NOV 94
NOTE BOOK	TRACED BY T. SANCHEZ " NOV 94
	DESIGNED BY " " DEC 94
NO.	QUANTITIES BY K. MATSUDA
	CHECKED BY " "

HERNANDEZ ELWOOD:::2410:[DWG.ELECTJE015.FGB]1 12JUN95-14.51.50

FED. ROAD DIST. NO.	STATE	FED. AID PROJ. NO.	FISCAL YEAR	SHEET NO.	TOTAL SHEETS
HAWAII	HAW.	I-H3-1(75) UNIT III	1994	74	353

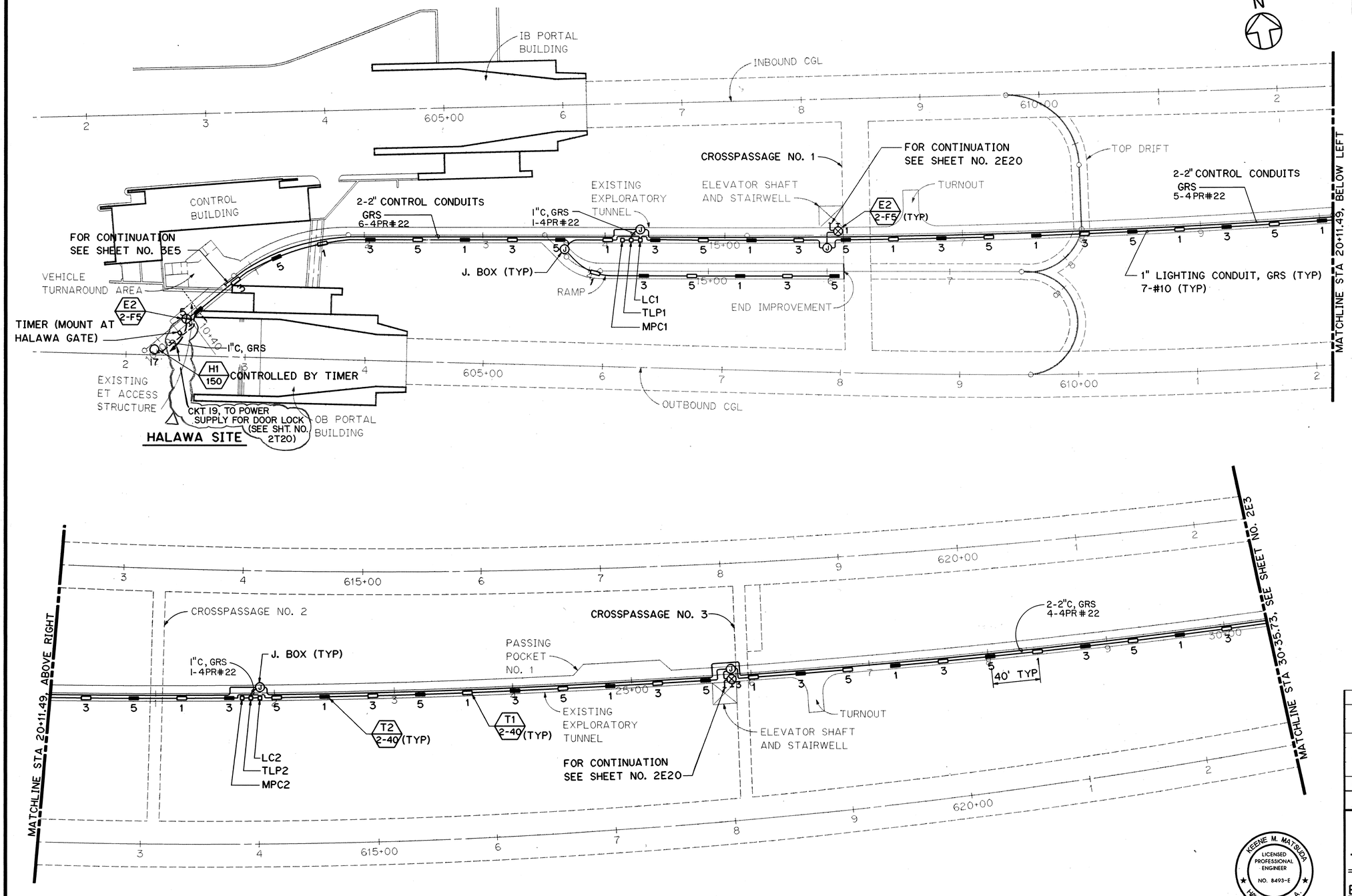

PLAN SYMBOLS

(TYP. FOR SHEET NOS 2E3, 2E4 & 2E5 ONLY)

- SURFACE-MOUNTED FLUORESCENT FIXTURE
- SURFACE-MOUNTED FLUORESCENT FIXTURE EMERGENCY/ NORMAL

FOR DETAIL AS-BUILT INFORMATION REFER TO CONSTRUCTION SUBMITTALS

DATE	REVISION
5/29/97	DCN 75-019: ADDED CIRCUIT FOR HALAWA PORTAL DOOR LOCK POWER
10/27/95	ADDENDUM 2-DELETED CONTROL CONDUIT CONN. AT CP 1 & 3, ADDED LTG. CONTROL WIRE SIZE
10/13/95	ADDENDUM 1

STATE OF HAWAII
DEPARTMENT OF TRANSPORTATION
HIGHWAYS DIVISION

TUNNEL LIGHTING PLAN-1

EXPLORATORY TUNNEL IMPROVEMENTS
H-3 FINISH (UNIT III)
FAIP NO. I-H3-I(75), UNIT III
T.K. TUNNEL/ACCESS ROADS

SCALE: 1" = 40' DATE: JUN 1995

SHEET NO. 2E2 OF 30 SHEETS

C.O. ADD. 74

PARTIAL PLAN - EXPLORATORY TUNNEL

GRAPHIC SCALE
40' 0' 40' 80'
1" = 40'

KEENE M. MATSUDA
LICENSED PROFESSIONAL ENGINEER
NO. 8493-E
HAWAII, U.S.A.

THIS WORK WAS PREPARED BY ME OR UNDER MY SUPERVISION

Keene Matsuda

		DATE
ORIGINAL PLAN	SURVEY PLOTTED BY	
	DRAWN BY	R. J. HERNANDEZ NOV 94
	TRACED BY	
	DESIGNED BY	T. SANCHEZ NOV 94
NOTE BOOK	QUANTITIES BY	
	CHECKED BY	K. MATSUDA DEC 94
NO.		

HERNANDEZ ELWOOD:::2410:DWG.ELECTJE001.FGB71 13JUN95-08.05.10

FED. ROAD DIST. NO.	STATE	FED. AID PROJ. NO.	FISCAL YEAR	SHEET NO.	TOTAL SHEETS
HAWAII	HAW.	I-H3-1(75) UNIT III	1994	75	353

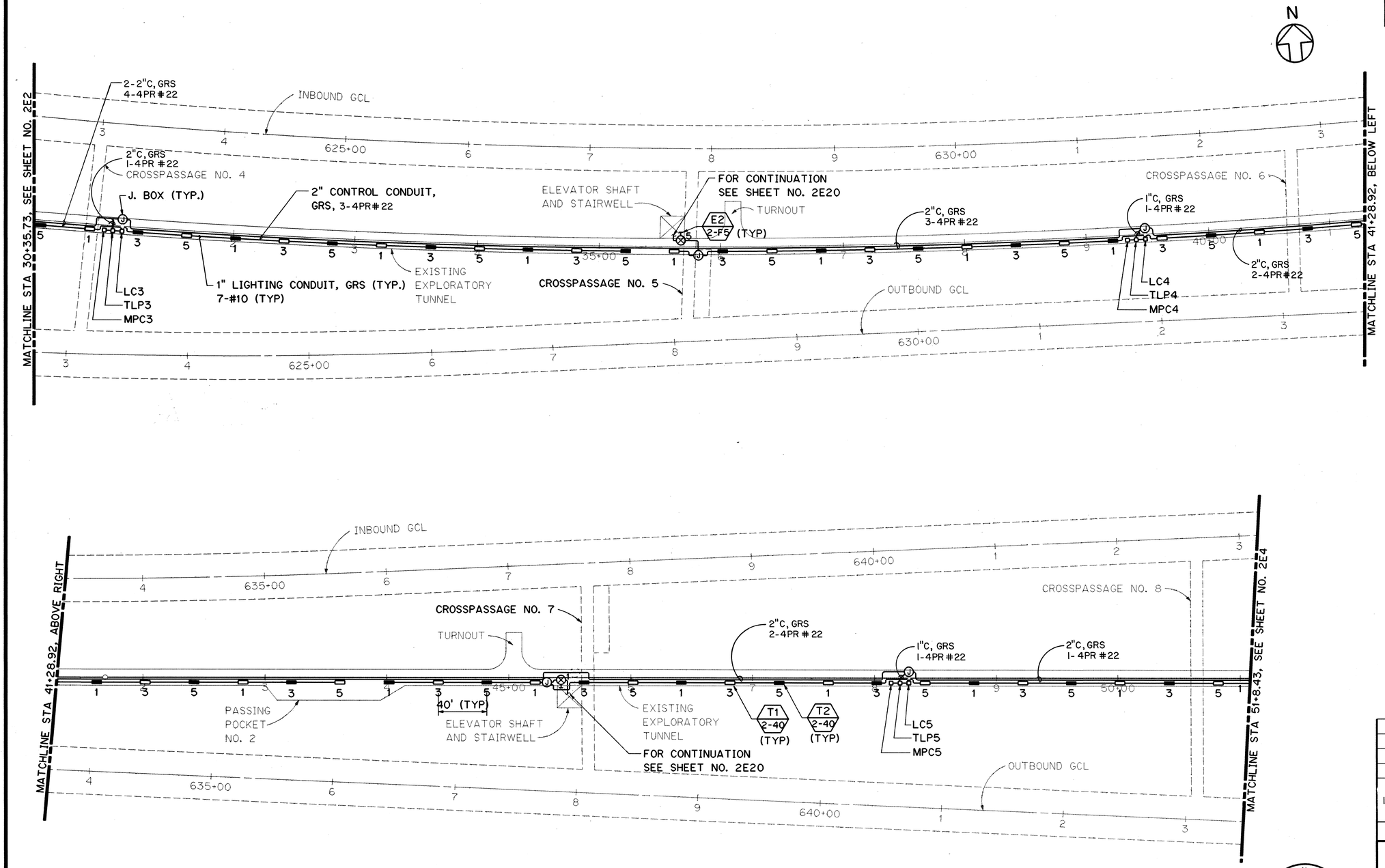

PARTIAL PLAN - EXPLORATORY TUNNEL

GRAPHIC SCALE
40' 0' 40' 80'
1" = 40'

ORIGINAL PLAN		DATE
	SURVEY PLOTTED BY	
	DRAWN BY R. J. HERNANDEZ	NOV 94
	TRACED BY	
	DESIGNED BY T. SANCHEZ	NOV 94
NOTE BOOK	QUANTITIES BY	
	CHECKED BY K. MATSUDA	DEC 94
NO.		

DATE	REVISION
10/27/95	ADDENDUM 2-DELETED CONTROL CONDUIT
	CONN. AT CP 5 & 7, ADDED CONTROL
	WIRE SIZE

KEENE M. MATSUDA
LICENSED PROFESSIONAL ENGINEER
NO. 8493-E
HAWAII, U.S.A.

THIS WORK WAS PREPARED BY ME OR UNDER MY SUPERVISION

STATE OF HAWAII
DEPARTMENT OF TRANSPORTATION
HIGHWAYS DIVISION

TUNNEL LIGHTING PLAN-2

EXPLORATORY TUNNEL IMPROVEMENTS
H-3 FINISH (UNIT III)
FAIP NO. I-H3-1(75), UNIT III
T.K. TUNNEL/ACCESS ROADS

SCALE: 1" = 40' DATE: JUN 1995

SHEET NO. 2E3 OF 30 SHEETS

ADD. 75

HERNANDEZ ELWOOD:::2410:DWG.ELECTJE002.FGB71 12JUN95-14.39.00

FED. ROAD DIST. NO.	STATE	FED. AID PROJ. NO.	FISCAL YEAR	SHEET NO.	TOTAL SHEETS
HAWAII	HAW.	I-H3-1(75) UNIT III	1994	76	353

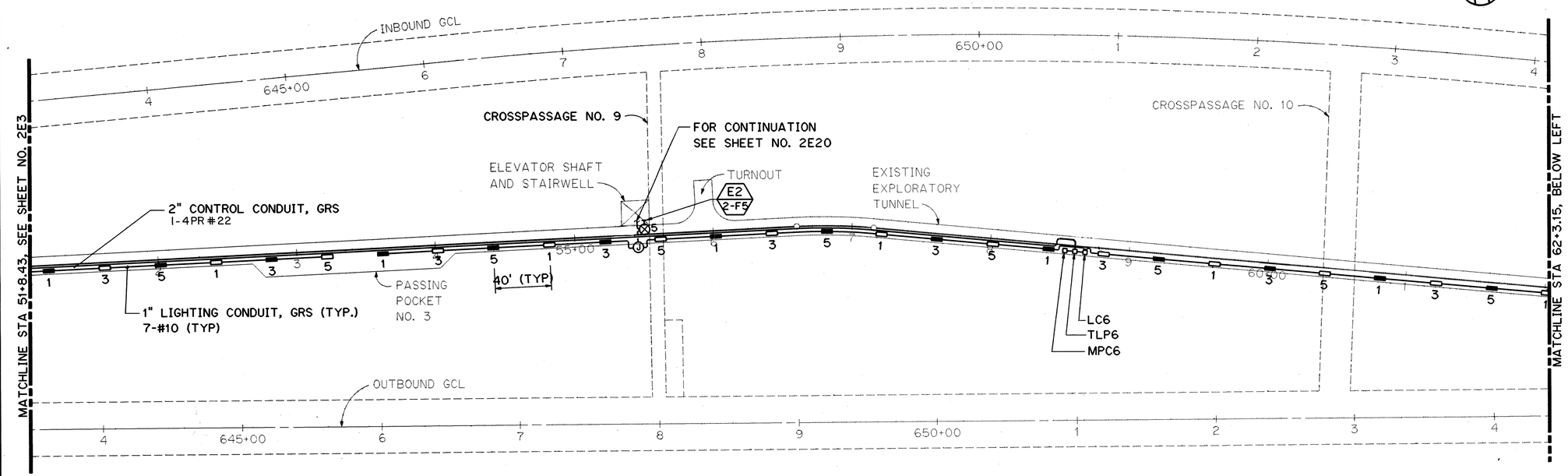

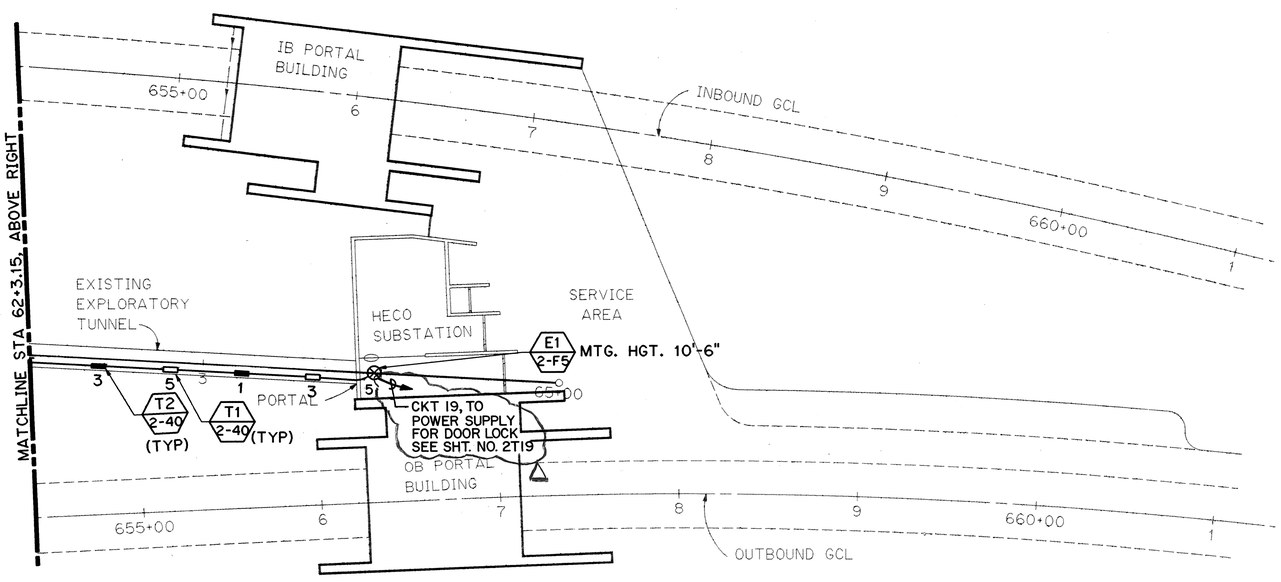

HAIKU SITE

PARTIAL PLAN - EXPLORATORY TUNNEL

GRAPHIC SCALE
40' 0' 40' 80'
1" = 40'

KEENE M. MATSUDA
LICENSED PROFESSIONAL ENGINEER
NO. 8493-E
HAWAII, U.S.A.

THIS WORK WAS PREPARED BY ME OR UNDER MY SUPERVISION

Keene Matsuda

DATE	REVISION
5/29/97	DCN 75-019: ADDED CIRCUIT FOR HAIKU PORTAL POWER DOOR LOCK
10/27/95	ADDENDUM 2 - ADDED LTG. CONTROL WIRE SIZE & DELETED 2" CONTROL C FROM EF-102 TO TLP6

STATE OF HAWAII
DEPARTMENT OF TRANSPORTATION
HIGHWAYS DIVISION

TUNNEL LIGHTING PLAN-3

EXPLORATORY TUNNEL IMPROVEMENTS
H-3 FINISH (UNIT III)
FAIP NO. I-H3-I(75), UNIT III
T.K. TUNNEL/ACCESS ROADS

SCALE: 1" = 40' DATE: JUN 1995

SHEET NO. 2E4 OF 30 SHEETS

		DATE
SURVEY PLOTTED BY		
DRAWN BY	R. J. HERNANDEZ	NOV 94
TRACED BY		
DESIGNED BY	T. SANCHEZ	NOV 94
QUANTITIES BY		
CHECKED BY	K. MATSUDA	DEC 94

ORIGINAL PLAN
NOTE BOOK
NO.

HERNANDEZ ELWOOD:::2410:[DWG.ELECT]E003.FGB71 12JUN95-14.32.30

C.O. ADD. 76

FED. ROAD DIST. NO.	STATE	FED. AID PROJ. NO.	FISCAL YEAR	SHEET NO.	TOTAL SHEETS
HAWAII	HAW.	I-H3-1(75) UNIT III	1994	77	353

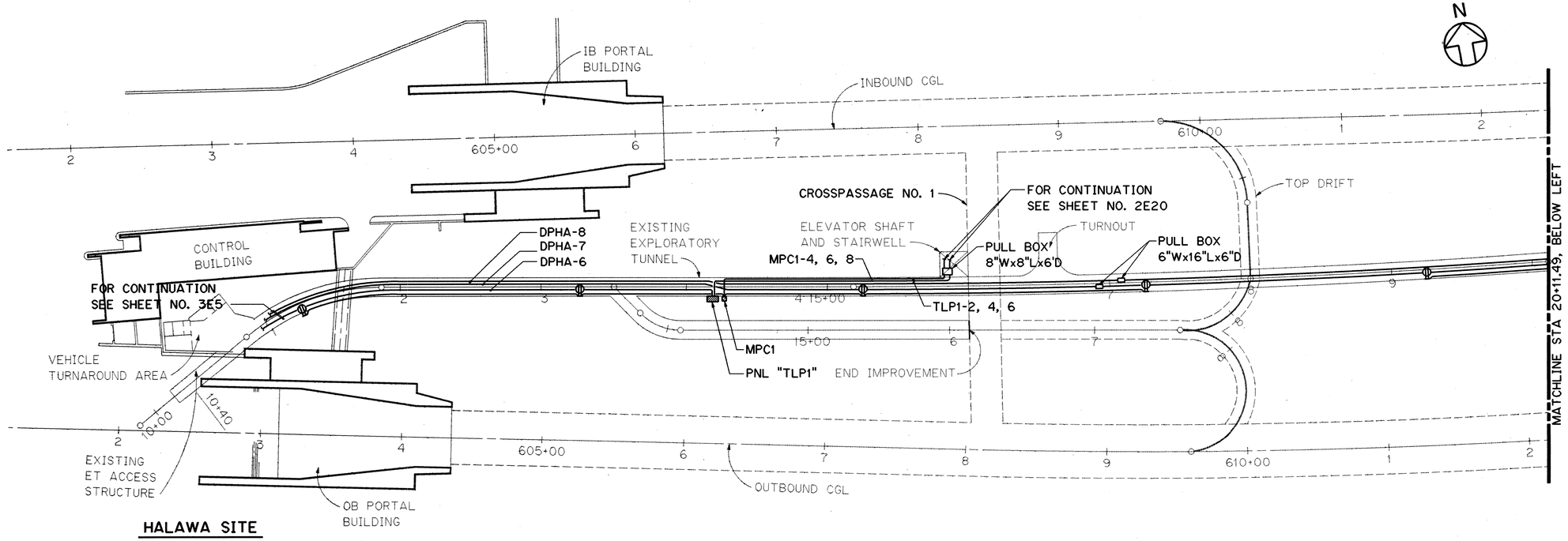

HALAWA SITE

NOTES:

1. FOR TUNNEL POWER CONDUIT ARRANGEMENT, REFER TO SHEET NO. 2E21.

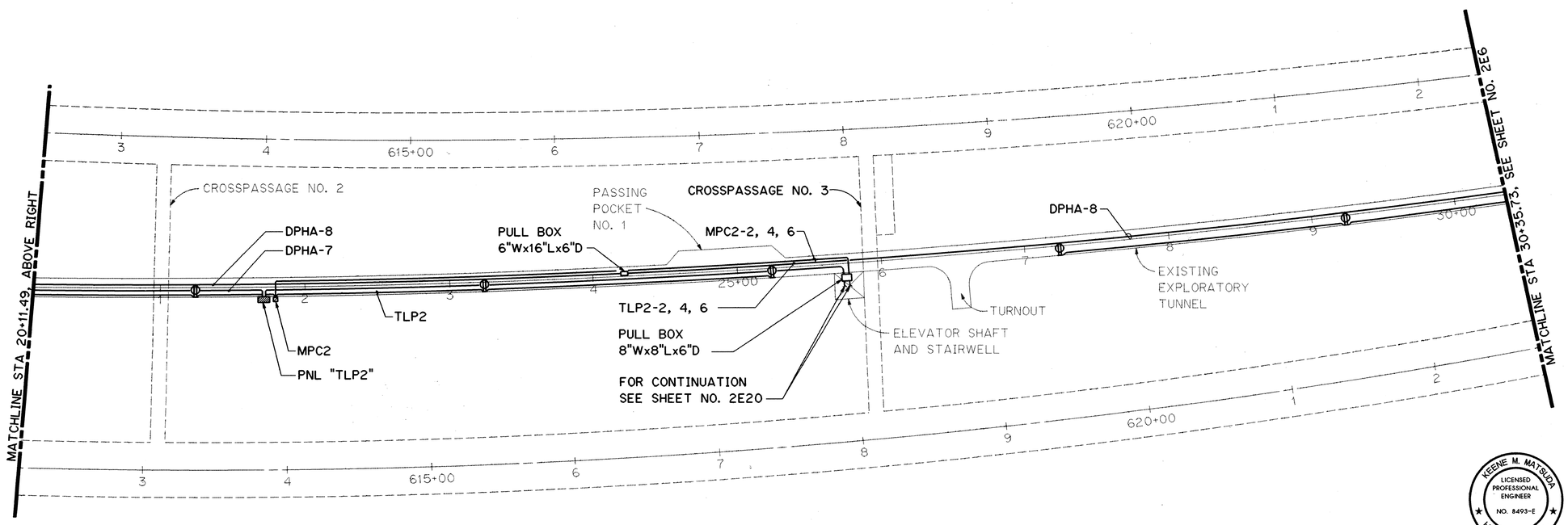

PARTIAL PLAN - EXPLORATORY TUNNEL

GRAPHIC SCALE
40' 0' 40' 80'
1" = 40'

KEENE M. MATSUDA
LICENSED PROFESSIONAL ENGINEER
NO. 8493-E
HAWAII, U.S.A.

THIS WORK WAS PREPARED BY ME OR UNDER MY SUPERVISION

Keene Matsuda

DATE	REVISION

STATE OF HAWAII
DEPARTMENT OF TRANSPORTATION
HIGHWAYS DIVISION

TUNNEL POWER PLAN-1

EXPLORATORY TUNNEL IMPROVEMENTS
H-3 FINISH (UNIT III)
FAIP NO. I-H3-1(75), UNIT III
T.K. TUNNEL/ACCESS ROADS

SCALE: 1" = 40' DATE: JUN 1995

SHEET NO. 2E5 OF 30 SHEETS

ORIGINAL PLAN		DATE
	SURVEY PLOTTED BY	
	DRAWN BY R. J. HERNANDEZ	NOV 94
	TRACED BY	
NOTE BOOK	DESIGNED BY T. SANCHEZ	NOV 94
	QUANTITIES BY	
NO.	CHECKED BY K. MATSUDA	DEC 94

HERNANDEZ ELWOOD:::2410:[DWG.ELECTJE004.FGB]T 12JUN95-14.28.40

FED. ROAD DIST. NO.	STATE	FED. AID PROJ. NO.	FISCAL YEAR	SHEET NO.	TOTAL SHEETS
HAWAII	HAW.	I-H3-1(75) UNIT III	1994	78	353

N

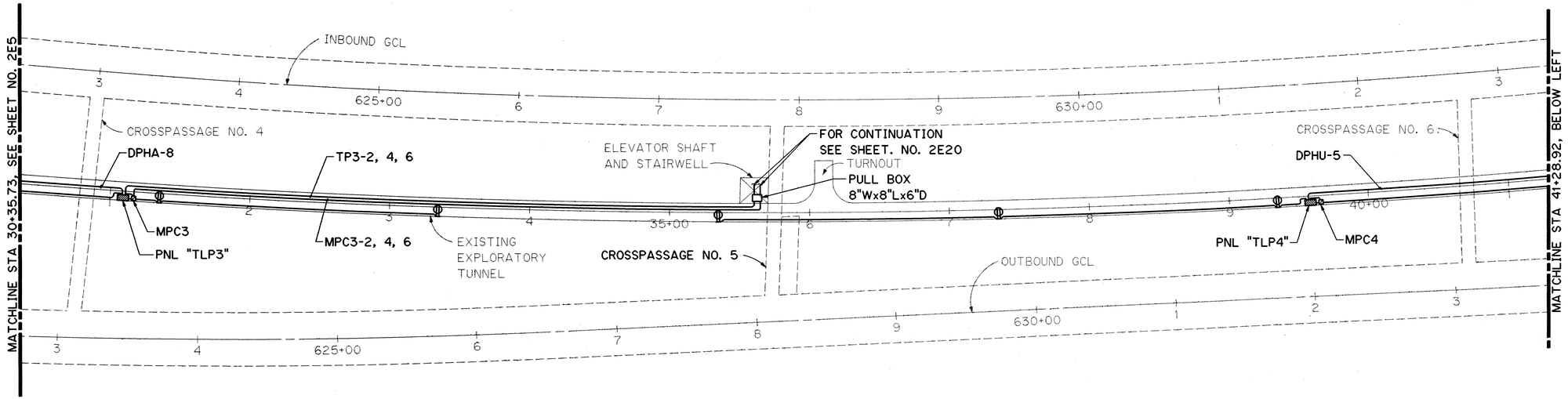

NOTES:

1. FOR TUNNEL POWER CONDUIT ARRANGEMENT, REFER TO SHEET NO. 2E21.

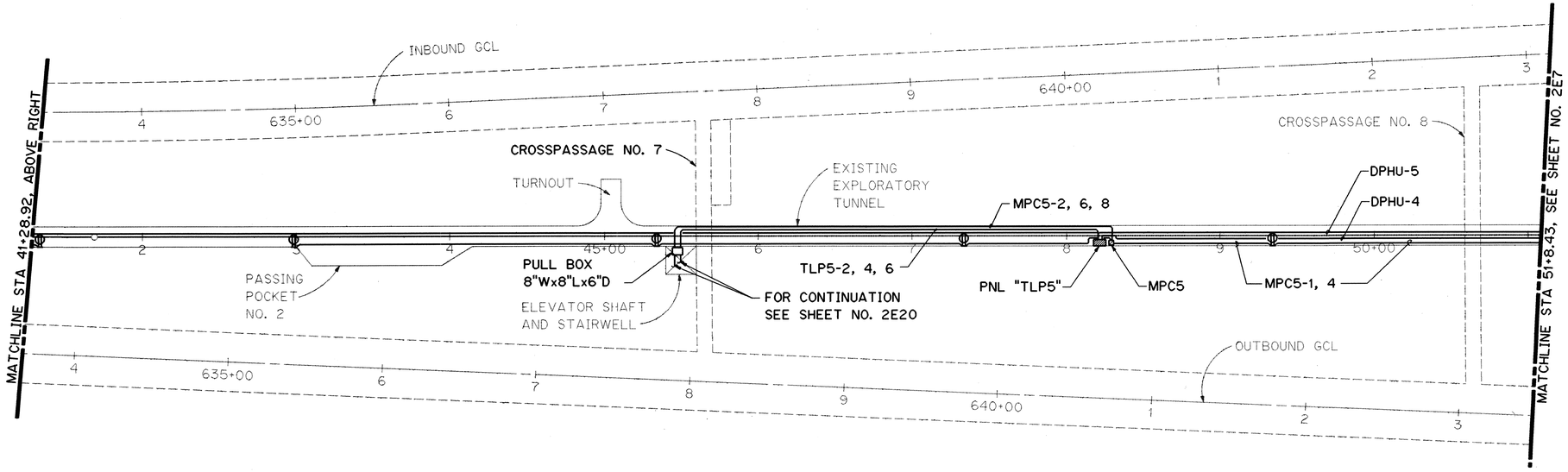

PARTIAL PLAN - EXPLORATORY TUNNEL

GRAPHIC SCALE
40' 0' 40' 80'
1" = 40'

KEENE M. MATSUDA
LICENSED PROFESSIONAL ENGINEER
NO. 8493-E
HAWAII, U.S.A.

THIS WORK WAS PREPARED BY ME OR UNDER MY SUPERVISION

Keene Matsuda

DATE	REVISION

STATE OF HAWAII
DEPARTMENT OF TRANSPORTATION
HIGHWAYS DIVISION

TUNNEL POWER PLAN-2

EXPLORATORY TUNNEL IMPROVEMENTS
H-3 FINISH (UNIT III)
FAIP NO. I-H3-1(75), UNIT III
T.K. TUNNEL/ACCESS ROADS

SCALE: 1" = 40' DATE: JUN 1995

SHEET NO. 2E6 OF 30 SHEETS

ORIGINAL PLAN	SURVEY PLOTTED BY	R. J. HERNANDEZ	NOV 94
	DRAWN BY	" "	" "
	TRACED BY	T. SANCHEZ	NOV 94
NOTE BOOK	DESIGNED BY	" "	" "
	QUANTITIES BY	" "	" "
NO.	CHECKED BY	K. MATSUDA	DEC 94

HERNANDEZ ELWOOD:::2410:[DWG.ELECT]E005.FGB/T 12JUN95-14.19.00

FED. ROAD DIST. NO.	STATE	FED. AID PROJ. NO.	FISCAL YEAR	SHEET NO.	TOTAL SHEETS
HAWAII	HAW.	I-H3-1(75) UNIT III	1994	79	353

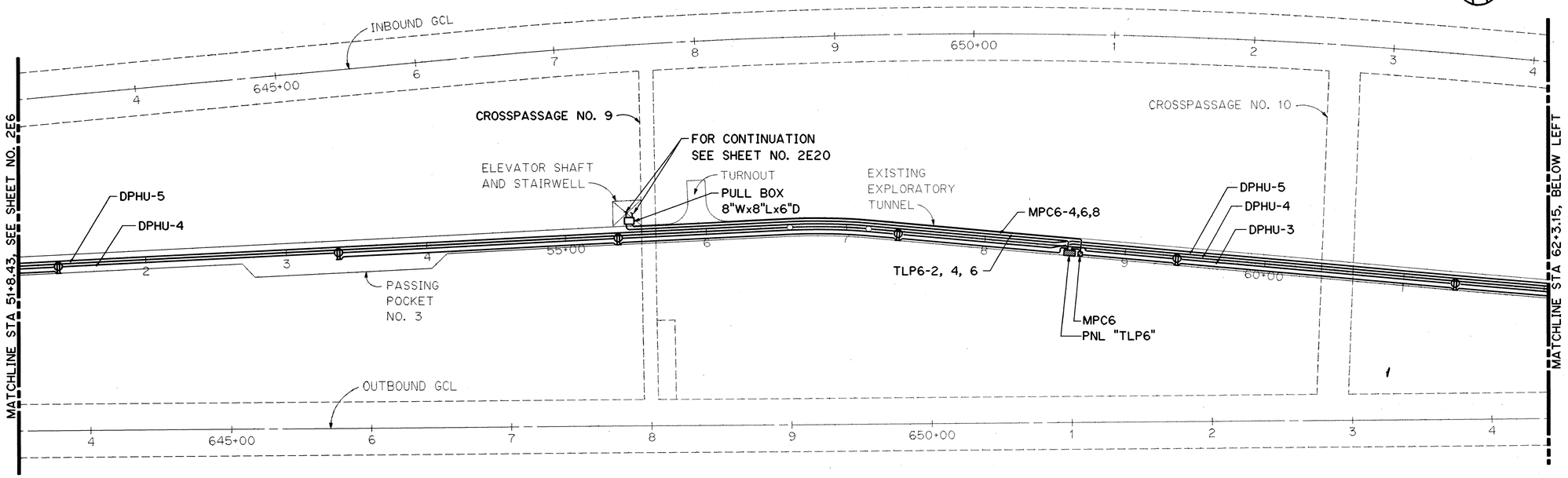

NOTES:

1. FOR TUNNEL POWER CONDUIT ARRANGEMENT, REFER TO SHEET NO. 2E21.

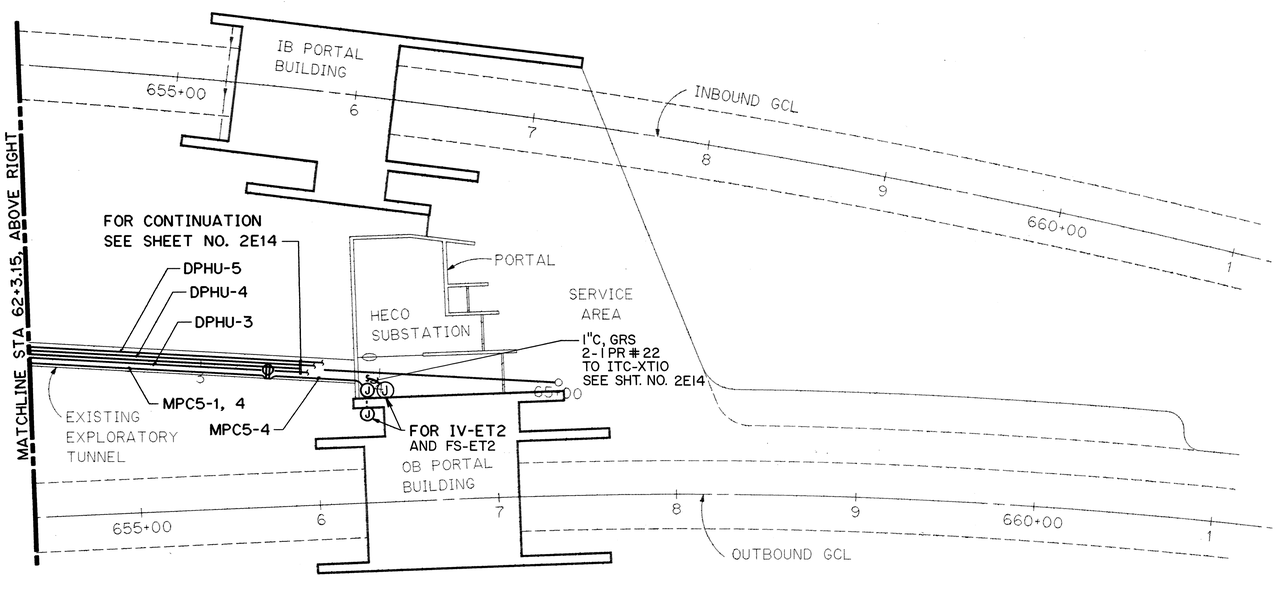

HAIKU SITE

PARTIAL PLAN - EXPLORATORY TUNNEL

GRAPHIC SCALE
40' 0' 40' 80'
1" = 40'

KEENE M. MATSUDA
LICENSED PROFESSIONAL ENGINEER
NO. 8493-E
HAWAII, U.S.A.

THIS WORK WAS PREPARED BY ME OR UNDER MY SUPERVISION

Keene Matsuda

DATE	REVISION
10/27/95	ADDENDUM 2 - ADDED FS-ET2 & MONITORING CONDUIT FOR IV-ET2 & FS-ET2 TO ITC-XTIO

STATE OF HAWAII
DEPARTMENT OF TRANSPORTATION
HIGHWAYS DIVISION

TUNNEL POWER PLAN-3

EXPLORATORY TUNNEL IMPROVEMENTS
H-3 FINISH (UNIT III)
FAIP NO. I-H3-1(75), UNIT III
T.K. TUNNEL/ACCESS ROADS

SCALE: 1" = 40' DATE: JUN 1995

SHEET NO. 2E7 OF 30 SHEETS

		DATE
SURVEY PLOTTED BY		
DRAWN BY	R. J. HERNANDEZ	NOV 94
TRACED BY		
DESIGNED BY	T. SANCHEZ	NOV 94
QUANTITIES BY		
CHECKED BY	K. MATSUDA	DEC 94

ORIGINAL PLAN
NOTE BOOK
NO.

HERNANDEZ ELWOOD:::2410:[DWG.ELECT]E006.FGB;1 12JUN95-14.15.50

ADD. 79

FED. ROAD DIST. NO.	STATE	FED. AID PROJ. NO.	FISCAL YEAR	SHEET NO.	TOTAL SHEETS
HAWAII	HAW.	I-H3-1(75) UNIT III	1994	80	353

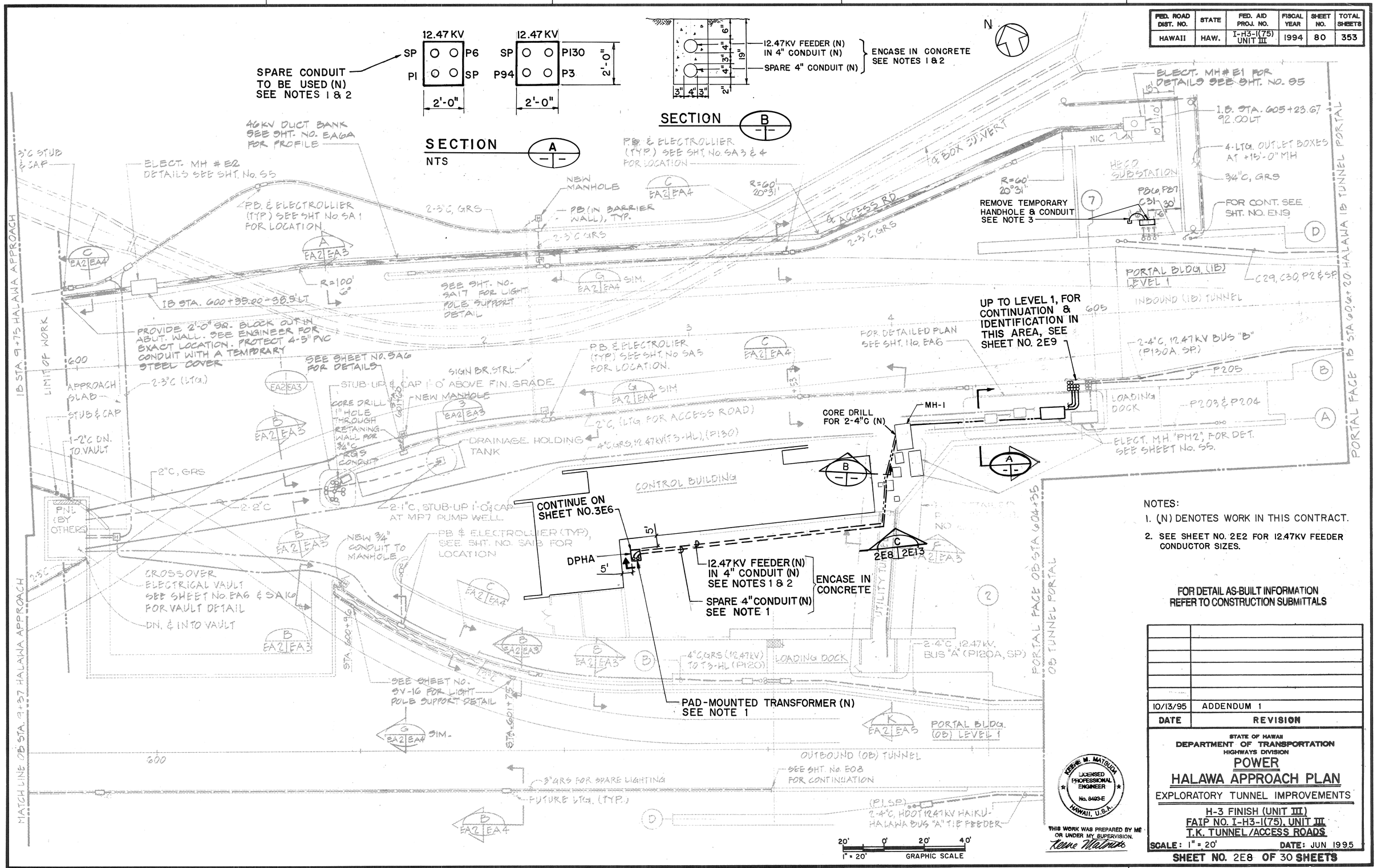

NOTES:

1. (N) DENOTES WORK IN THIS CONTRACT.
2. SEE SHEET NO. 2E2 FOR 12.47KV FEEDER CONDUCTOR SIZES.

FOR DETAIL AS-BUILT INFORMATION REFER TO CONSTRUCTION SUBMITTALS

DATE	REVISION
10/13/95	ADDENDUM 1

STATE OF HAWAII
DEPARTMENT OF TRANSPORTATION
HIGHWAYS DIVISION

POWER

HALAWA APPROACH PLAN

EXPLORATORY TUNNEL IMPROVEMENTS

H-3 FINISH (UNIT III)
FAIP NO. I-H3-1(75), UNIT III
T.K. TUNNEL/ACCESS ROADS

SCALE: 1" = 20' DATE: JUN 1995

KEENE M. MATSUDA LICENSED PROFESSIONAL ENGINEER No. 8493-E HAWAII, U.S.A.

THIS WORK WAS PREPARED BY ME OR UNDER MY SUPERVISION.

SHEET NO. 2E8 OF 30 SHEETS

		DATE
ORIGINAL PLAN		
DESIGNED	L. WANG	NOV 94
NOTE BOOK	DRAWN BY	NOV 94
	DESIGNED BY T. SANCHEZ	NOV 94
	QUANTITIES BY	
No.	CHECKED BY K. MATSUDA	DEC 94

ADD. 80

FED. ROAD DIST. NO.	STATE	FED. AID PROJ. NO.	FISCAL YEAR	SHEET NO.	TOTAL SHEETS
HAWAII	HAW.	I-H3-1(75) UNIT III	1994	81	353

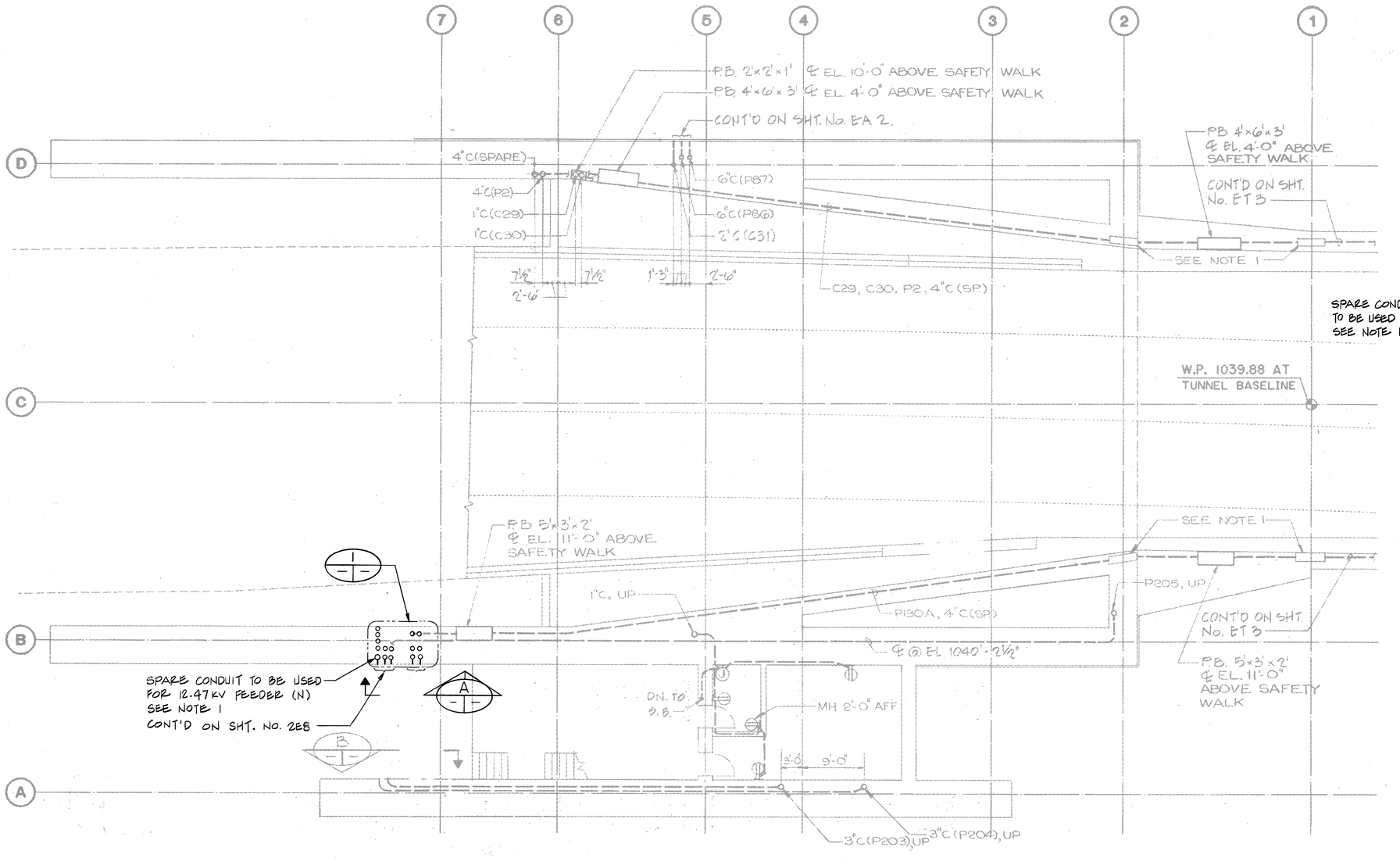

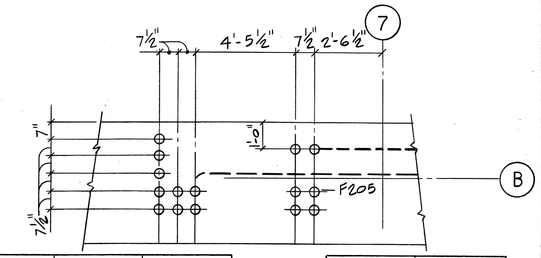

4"C(P202)		
4"C(C32)		
4"C(P208)		
4"C (SP)	4"C(P1)	4"C(P201)
4"C(SP)	4"C(P6)	3"C(C101)

4"C(SP)	4"C(P130A)
4"C (P94)	4"C(P130)
4"C (SP)	4"C (P3)

DETAIL
N.T.S.

SPARE CONDUIT TO BE USED (N) SEE NOTE 1

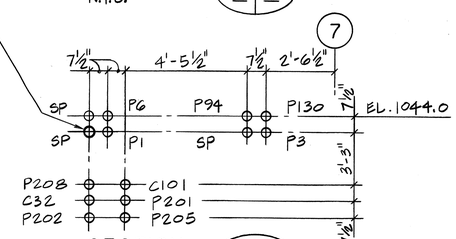

SECTION A
N.T.S.

NOTE:
1.(N) DENOTES WORK IN THIS CONTRACT.

DATE	REVISION

STATE OF HAWAII
DEPARTMENT OF TRANSPORTATION
HIGHWAYS DIVISION

POWER

HALAWA PORTAL IB - LEVEL I

EXPLORATORY TUNNEL IMPROVEMENTS
H-3 FINISH (UNIT III)
FAIP NO. I-H3-1(75), UNIT III
T.K. TUNNEL/ACCESS ROADS

SCALE: 1/8" = 1'-0" DATE: JUN 1995

KEENE M. MATSUDA
LICENSED PROFESSIONAL ENGINEER
No. 8493-E
HAWAII, U.S.A.

THIS WORK WAS PREPARED BY ME OR UNDER MY SUPERVISION.

SHEET NO. 2E9 OF 30 SHEETS

ORIGINAL PLAN		SURVEY PLOTTED BY		DATE
		DRAWN BY	L. WANG	NOV 94
NOTE BOOK		TRACED BY		
		DESIGNED BY	T. SAKICHI	NOV 94
NO.		QUANTITIES BY		
		CHECKED BY	K. MATSUDA	DEC 94

2410V152 2410: V152 ES0250.FGB:1 22SEP89-10.29.30

FED. ROAD DIST. NO.	STATE	FED. AID PROJ. NO.	FISCAL YEAR	SHEET NO.	TOTAL SHEETS
HAWAII	HAW.	I-H3-1(75) UNIT III	1994	82	353

NOTE:
1. (N) DENOTES WORK IN THIS CONTRACT.

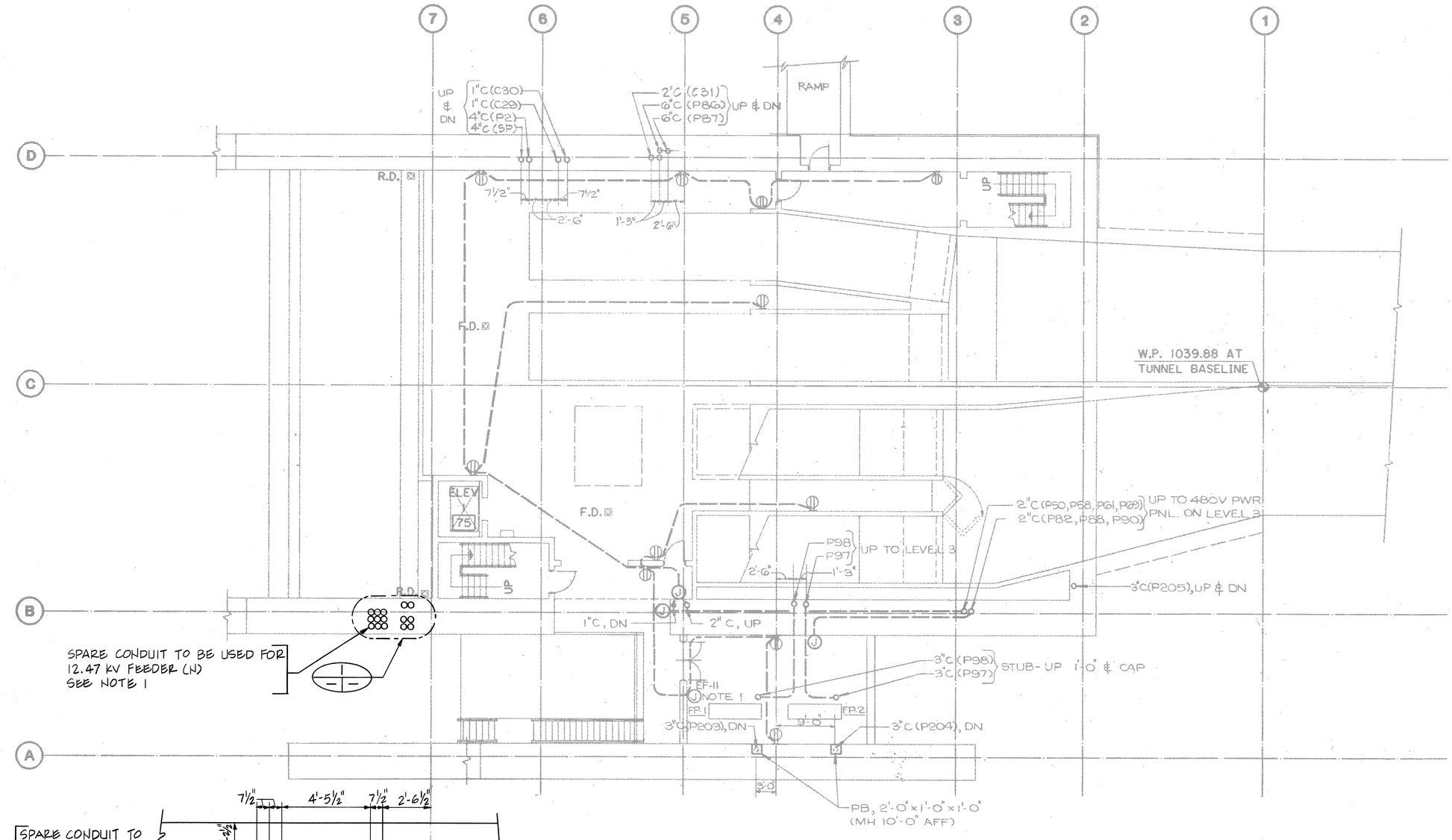

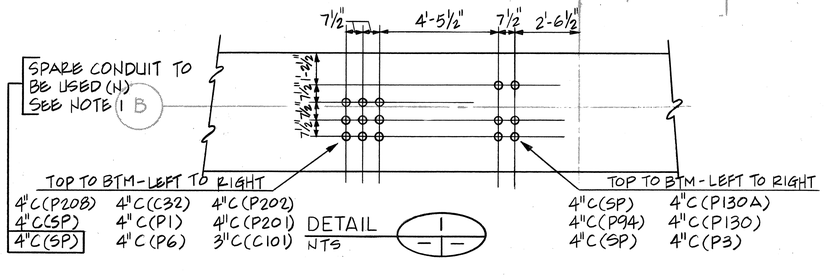

DETAIL
NTS

ORIGINAL PLAN		DATE
	SURVEY PLOTTED BY N. CHEN	NOV 94
	DRAWN BY	
NOTE BOOK	TRACED BY	NOV 94
	DESIGNED BY L. SANCHEZ	
NO.	QUANTITIES BY	DEC 94
	CHECKED BY K. MATSUDA	

DATE	REVISION

STATE OF HAWAII
DEPARTMENT OF TRANSPORTATION
HIGHWAYS DIVISION

POWER

HALAWA PORTAL IB - LEVEL 2

EXPLORATORY TUNNEL IMPROVEMENTS

H-3 FINISH (UNIT III)
FAIP NO. I-H3-1(75), UNIT III
T.K. TUNNEL/ACCESS ROADS

SCALE: 1/8" = 1'-0" DATE: JUN 1995

SHEET NO. 2E10 OF 30 SHEETS

KEONE M. MATSUDA
LICENSED PROFESSIONAL ENGINEER
No. 8423-E
HAWAII, U.S.A.

THIS WORK WAS PREPARED BY ME OR UNDER MY SUPERVISION.

2410Y152 2410: V152 ES0251.FGB,1 22SEP89-10.35.10

FED. ROAD DIST. NO.	STATE	FED. AID PROJ. NO.	FISCAL YEAR	SHEET NO.	TOTAL SHEETS
HAWAII	HAW.	I-H3-1(75) UNIT III	1994	83	353

NOTE:
1. (N) DENOTES WORK IN THIS CONTRACT.

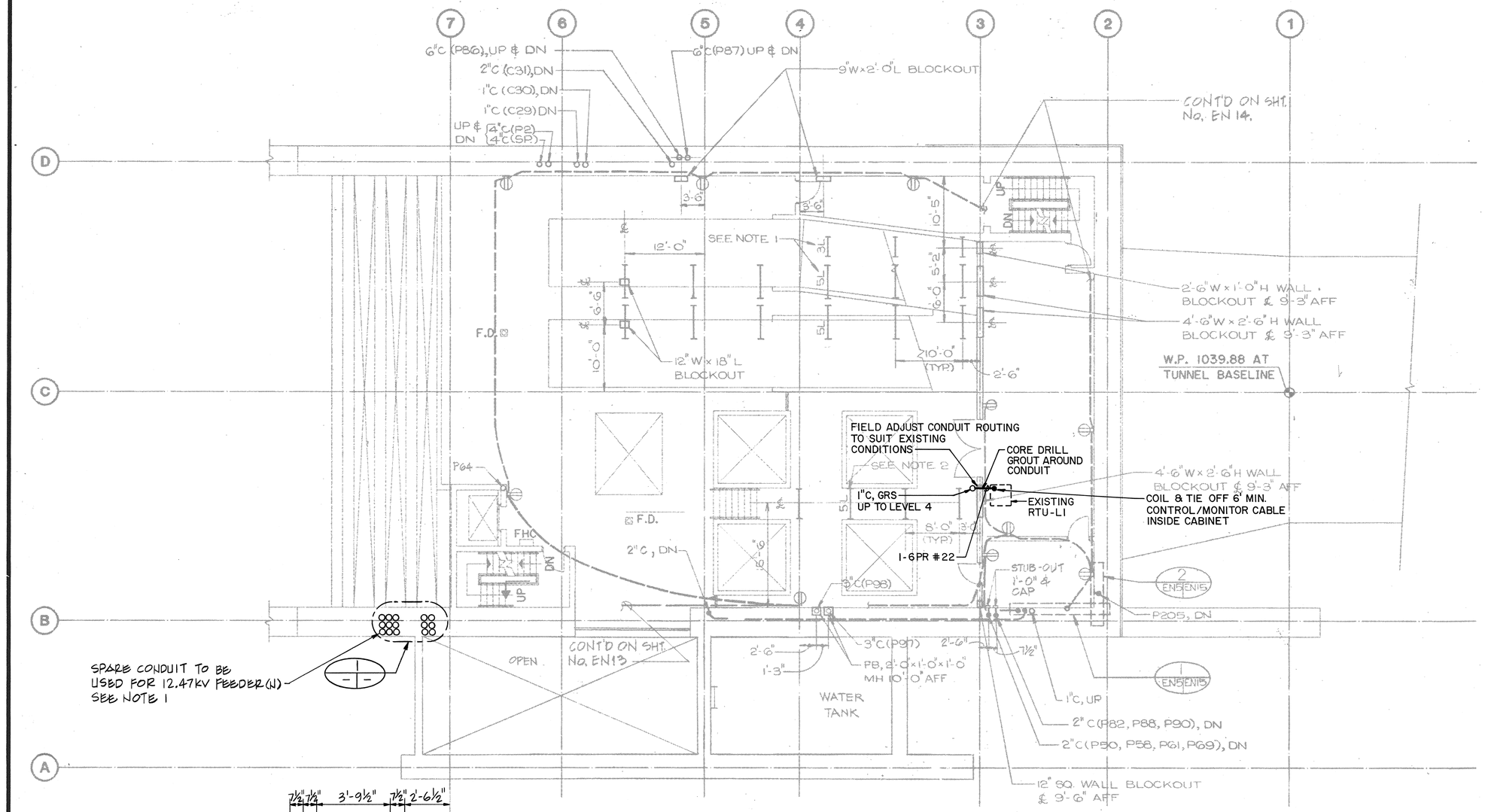

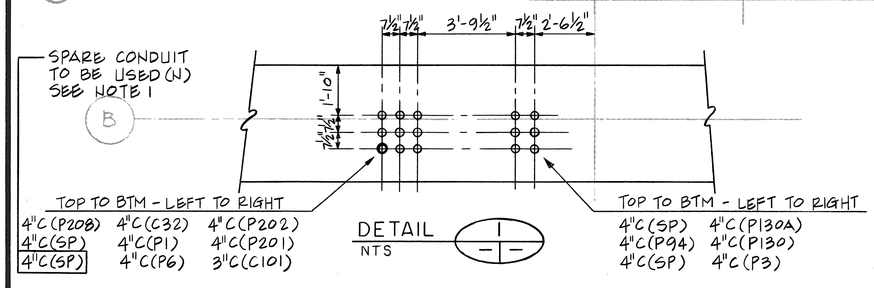

DETAIL
NTS

10/27/95	ADDENDUM 2-ADDED CONTROL/MONITOR CABLE FROM SWITCHGEAR (LEVEL 4) TO EXISTING RTU-L1
DATE	REVISION

STATE OF HAWAII
DEPARTMENT OF TRANSPORTATION
HIGHWAYS DIVISION

POWER

HALAWA PORTAL IB - LEVEL 3

EXPLORATORY TUNNEL IMPROVEMENTS
H-3 FINISH (UNIT III)
FAIP NO. I-H3-1(75), UNIT III
T.K. TUNNEL/ACCESS ROADS

SCALE: 1/8" = 1'-0" DATE: JUN 1995

SHEET NO. 2E11 OF 30 SHEETS

KEENE M. MATSUDA
LICENSED PROFESSIONAL ENGINEER
No. 8463-E
HAWAII, U.S.A.

THIS WORK WAS PREPARED BY ME OR UNDER MY SUPERVISION.
Keene Matsuda

		DATE
SURVEY PLOTTED BY	N. CHEN	NOV 94
DRAWN BY	"	"
TRACED BY	"	"
TYPESETTED BY	I. SANCHEZ	NOV 94
QUANTITIES BY	"	"
CHECKED BY	E. NATSUDA	DEC 94

ORIGINAL PLAN
NOTE BOOK
NO.

2410V152 2410: V152 ES0252.FGB;1 22SEP89-10.36.40

FED. ROAD DIST. NO.	STATE	FED. AID PROJ. NO.	FISCAL YEAR	SHEET NO.	TOTAL SHEETS
HAWAII	HAW.	I-H3-1(75) UNIT III	1994	84	353

NOTE:
1. (N) DENOTES WORK IN THIS CONTRACT
2. PROVIDE SEISMIC RESTRAINTS FOR RACEWAYS.

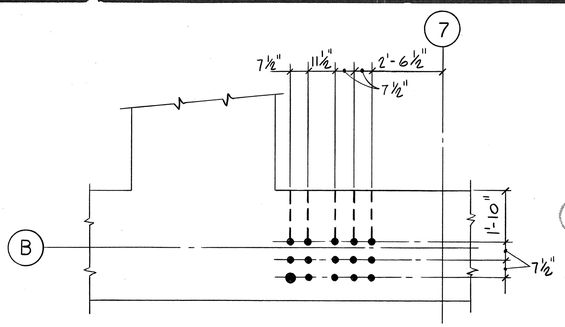

TOP TO BOTT. & LEFT RIGHT

4"C(P208)	4"C(C32)	4"C(P202)	4"C(SP)	4"C(P130A)
4"C (SP)	4"C(P1)	4"C(P201)	4"C(P94)	4"C(P130)
4"C(SP)	4"C(P6)	3"C(C101)	4"C(SP)	4"C(P3)

DETAIL 1
N. T. S.

SPARE CONDUIT TO BE USED (N)
SEE NOTE 1

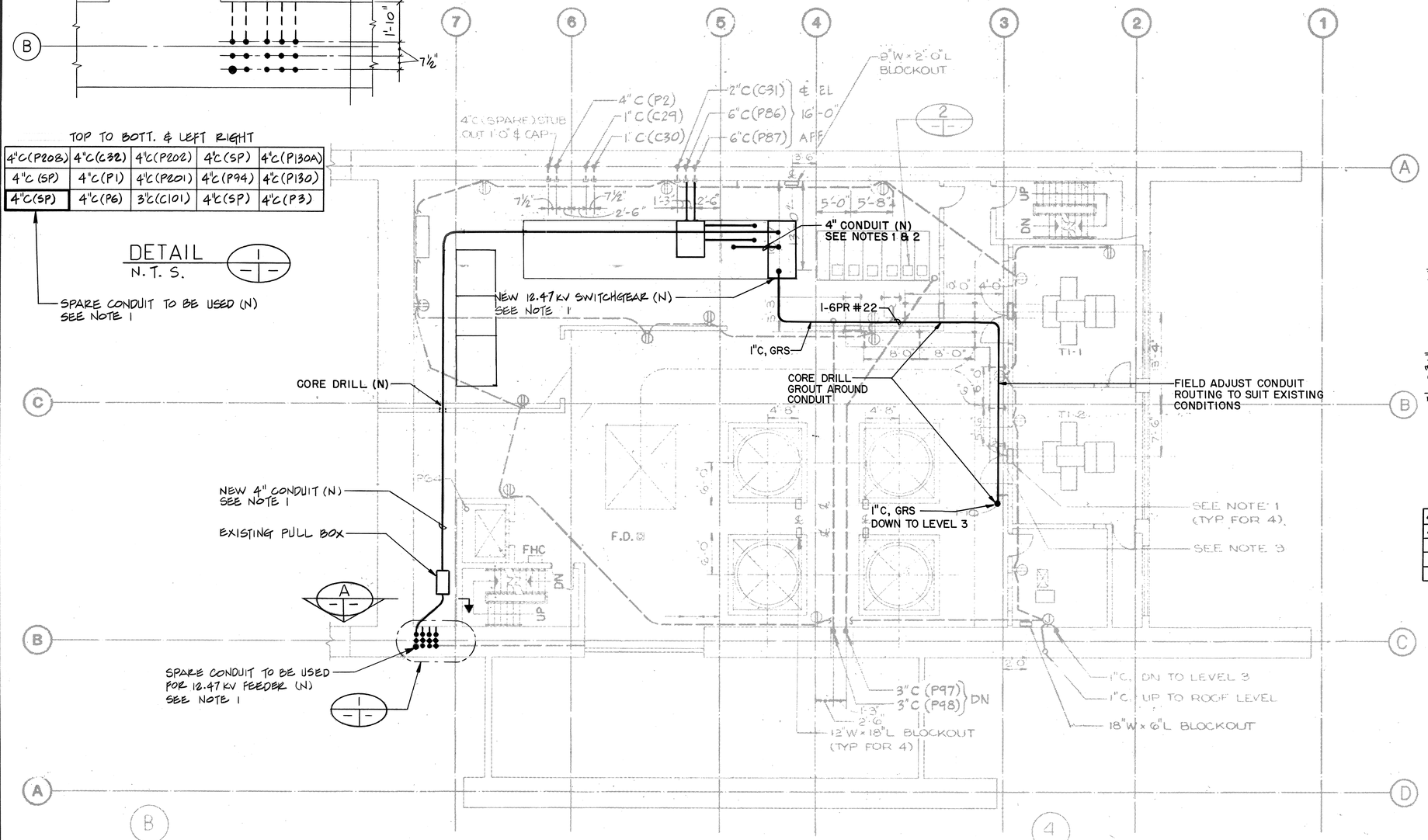

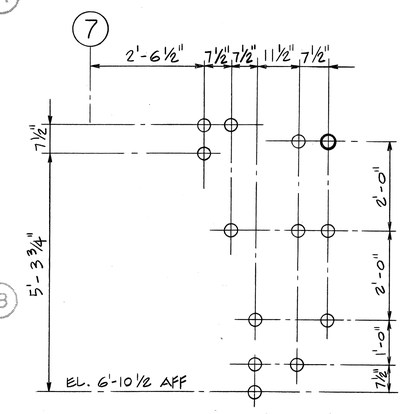

NOTE:
ALL CONDUIT SHALL BE STUBBED-OUT 1'-0" & CAPPED.

TOP TO BOTT. LEFT TO RIGHT

4"C(P130A)	4"C(SP)		4"C(P6)	4"C(SP)
4"C(P130A)	4"C(P94)		4"C(P1)	4"C(SP)
		3"C(C101)		4"C(P208)
		4"C(P201)	4"C(C32)	
		4"C(P202)		

SECTION A
N. T. S.

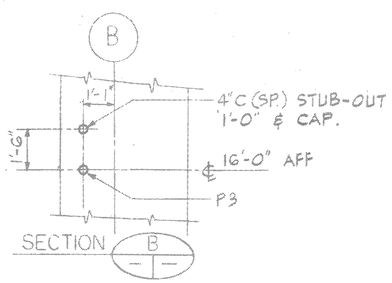

SECTION B

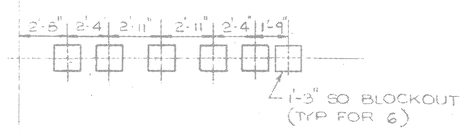

DETAIL 3
NTS

10/27/95	ADDENDUM 2 - ADDED CONTROL/MONITOR CABLE FROM SWITCHGEAR TO EXISTING RTU - L1 (LEVEL 3)
10/13/95	ADDENDUM 1
DATE	REVISION

STATE OF HAWAII
DEPARTMENT OF TRANSPORTATION
HIGHWAYS DIVISION

POWER

HALAWA PORTAL IB - LEVEL 4

EXPLORATORY TUNNEL IMPROVEMENTS
H-3 FINISH (UNIT III)
FAIP NO. I-H3-1(75), UNIT III
T.K. TUNNEL/ACCESS ROADS

SCALE: 1/8" = 1'-0" DATE: JUN 1995

SHEET NO. 2E12 OF 30 SHEETS

KEENE M. MATSUDA
LICENSED PROFESSIONAL ENGINEER
No. 8403-E
HAWAII, U.S.A.

THIS WORK WAS PREPARED BY ME OR UNDER MY SUPERVISION.

SURVEY PLOTTED BY	L. WONG	NOV 94
DRAWN BY		
TRACED BY	L. SANCHEZ	NOV 94
DESIGNED BY		
QUANTITIES BY	K. MATSUDA	DEC 94
CHECKED BY		

CONTROL PLAN
NOTE BOOK NO.

2410V152 2410: V152 ES0253.FGB/1 22SEP89-10.38.30

FED. ROAD DIST. NO.	STATE	FED. AID PROJ. NO.	FISCAL YEAR	SHEET NO.	TOTAL SHEETS
		I-H3-1(75) UNIT III	1994	85	353

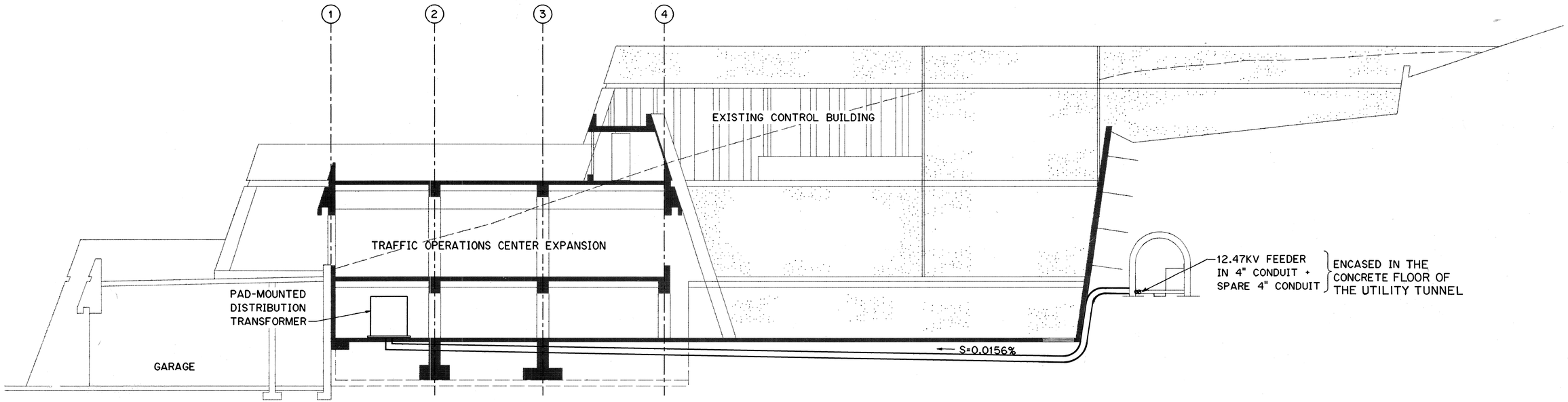

SECTION C 2E8 2E13

SCALE: 1/8" = 1'-0"

ORIGINAL PLAN	SURVEY PLOTTED BY	T. BURNS	DATE
	DRAWN BY	" "	APR 95
	TRACED BY	" "	
NOTE BOOK	DESIGNED BY	L. HORTON	APR 95
	QUANTITIES BY	" "	
NO.	CHECKED BY	K. MATSUDA	APR 95

GRAPHIC SCALE

8' 4' 0' 8' 16'

1/8" = 1'-0"

KEENE M. MATSUDA
LICENSED PROFESSIONAL ENGINEER
NO. 8493-E
HAWAII, U.S.A.

THIS WORK WAS PREPARED BY ME OR UNDER MY SUPERVISION

Keene Matsuda

DATE	REVISION
10/13/95	ADDENDUM I

STATE OF HAWAII
DEPARTMENT OF TRANSPORTATION
HIGHWAYS DIVISION

POWER HALAWA PORTAL

SECTIONS

EXPLORATORY TUNNEL IMPROVEMENTS
H-3 FINISH (UNIT III)
FAIP NO. I-H3-1(75), UNIT III
T.K. TUNNEL/ACCESS ROADS

SCALE: 1/8" = 1'-0" DATE: JUN 1995

SHEET NO. 2E13 OF 30 SHEETS

HERNANDEZ ELWOOD:::2410:IDWG.ELECTJE035.FGB;1 12JUN95-14.11.40

ADD. 85

FED. ROAD DIST. NO.	STATE	FED. AID PROJ. NO.	FISCAL YEAR	SHEET NO.	TOTAL SHEETS
HAWAII	HAW.	I-H3-1(75) UNIT III	1994	86	353

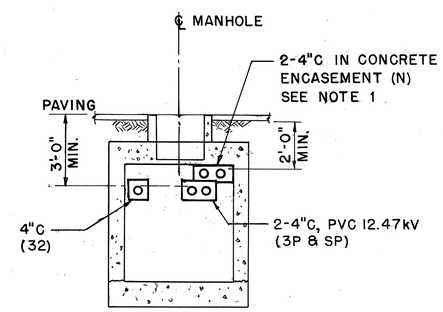

SECTION A
SCALE: 1/4"=1'-0"

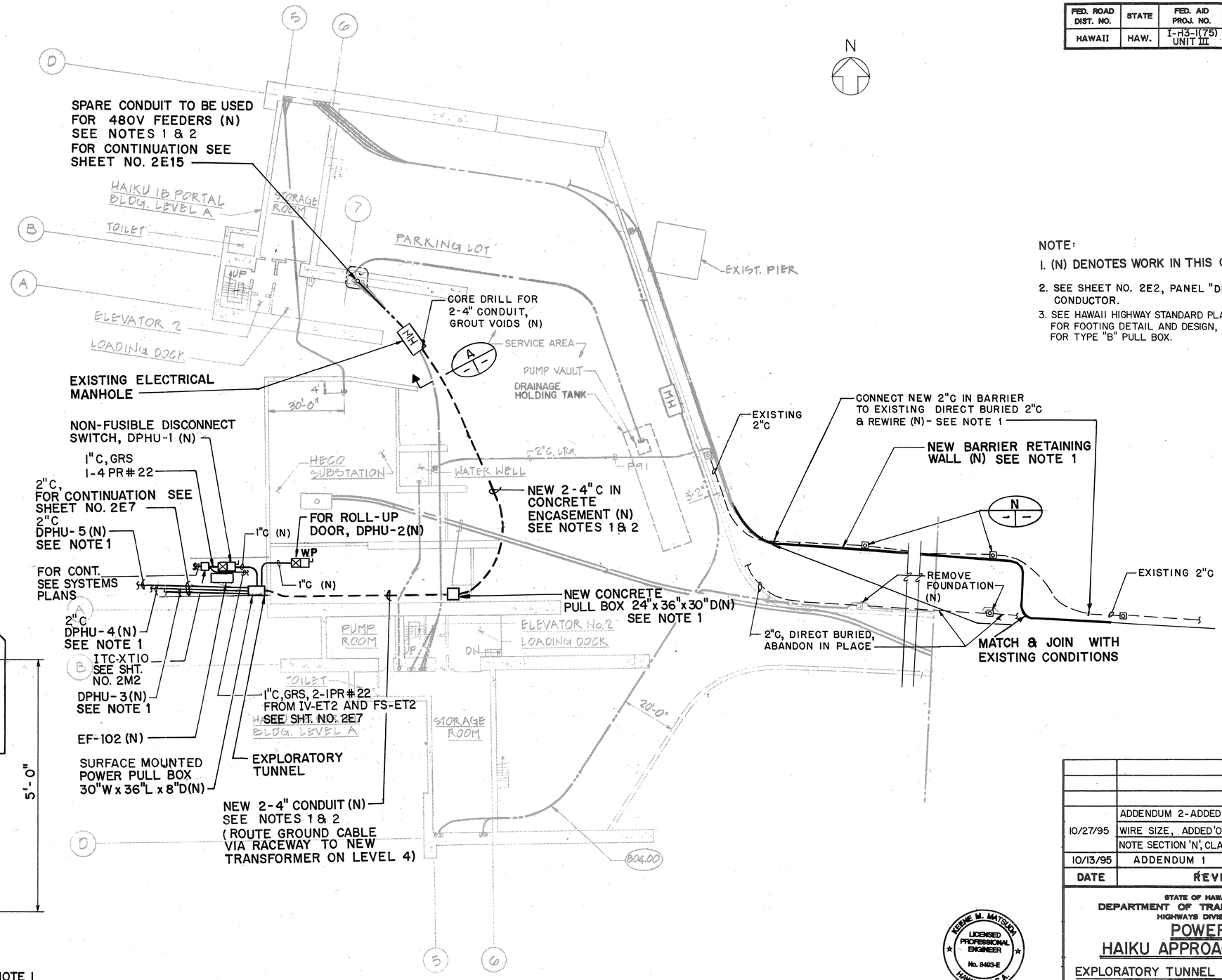

NOTE:

1. (N) DENOTES WORK IN THIS CONTRACT.
2. SEE SHEET NO. 2E2, PANEL "DPHU" FOR CONDUCTOR.
3. SEE HAWAII HIGHWAY STANDARD PLANS "TE-39" FOR FOOTING DETAIL AND DESIGN, AND "TE-41" FOR TYPE "B" PULL BOX.

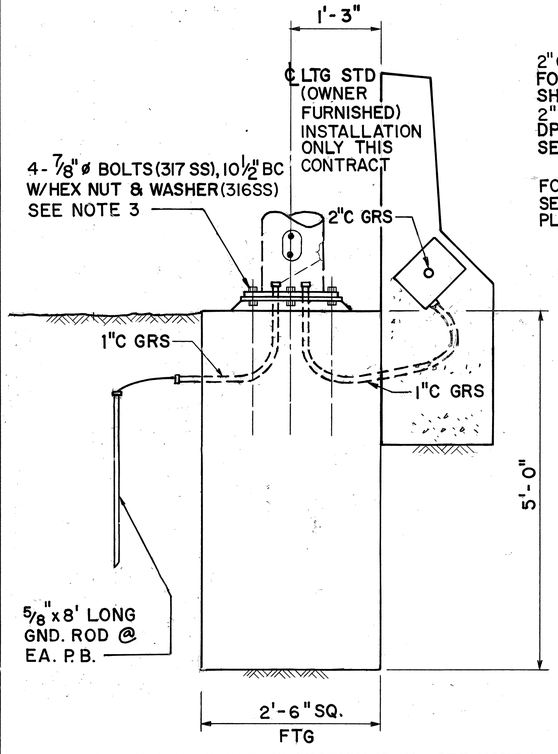

ALL WORK SHOWN THIS SECTION IS (N)-SEE NOTE 1

SECTION N
SCALE: 1"=1'-0"

10/27/95	ADDENDUM 2-ADDED ITC-XT10 & CONTROL WIRE SIZE, ADDED 'OWNER FURNISHED' NOTE SECTION 'N', CLARIFIED NOTES
10/13/95	ADDENDUM 1
DATE	REVISION

STATE OF HAWAII
DEPARTMENT OF TRANSPORTATION
HIGHWAYS DIVISION

POWER
HAIKU APPROACH PLAN
EXPLORATORY TUNNEL IMPROVEMENTS

H-3 FINISH (UNIT III)
FAIP NO. I-H3-1(75), UNIT III
T.K. TUNNEL/ACCESS ROADS

SCALE: 1" = 20' DATE: JUN 1995

SHEET NO. 2E14 OF 30 SHEETS

KEENE M. MATSUDA
LICENSED PROFESSIONAL ENGINEER
No. 8403-E
HAWAII, U.S.A.

THIS WORK WAS PREPARED BY ME OR UNDER MY SUPERVISION.

20' 0' 20' 40'
1" = 20' GRAPHIC SCALE

ORIGINAL PLAN		DATE
	SURVEY PLOTTED BY	
	DRAWN BY V. WANG	Nov 94
	TRACED BY	
	DESIGNED BY T. SANCHEZ	Nov 94
NOTE BOOK	QUANTITIES BY	
No.	CHECKED BY K. MATSUDA	DEC 94

FED. ROAD DIST. NO.	STATE	FED. AID PROJ. NO.	FISCAL YEAR	SHEET NO.	TOTAL SHEETS
HAWAII	HAW.	I-H3-1(75) UNIT III	1994	87	353

N

NOTE:

1. (N) DENOTES WORK IN THIS CONTRACT.

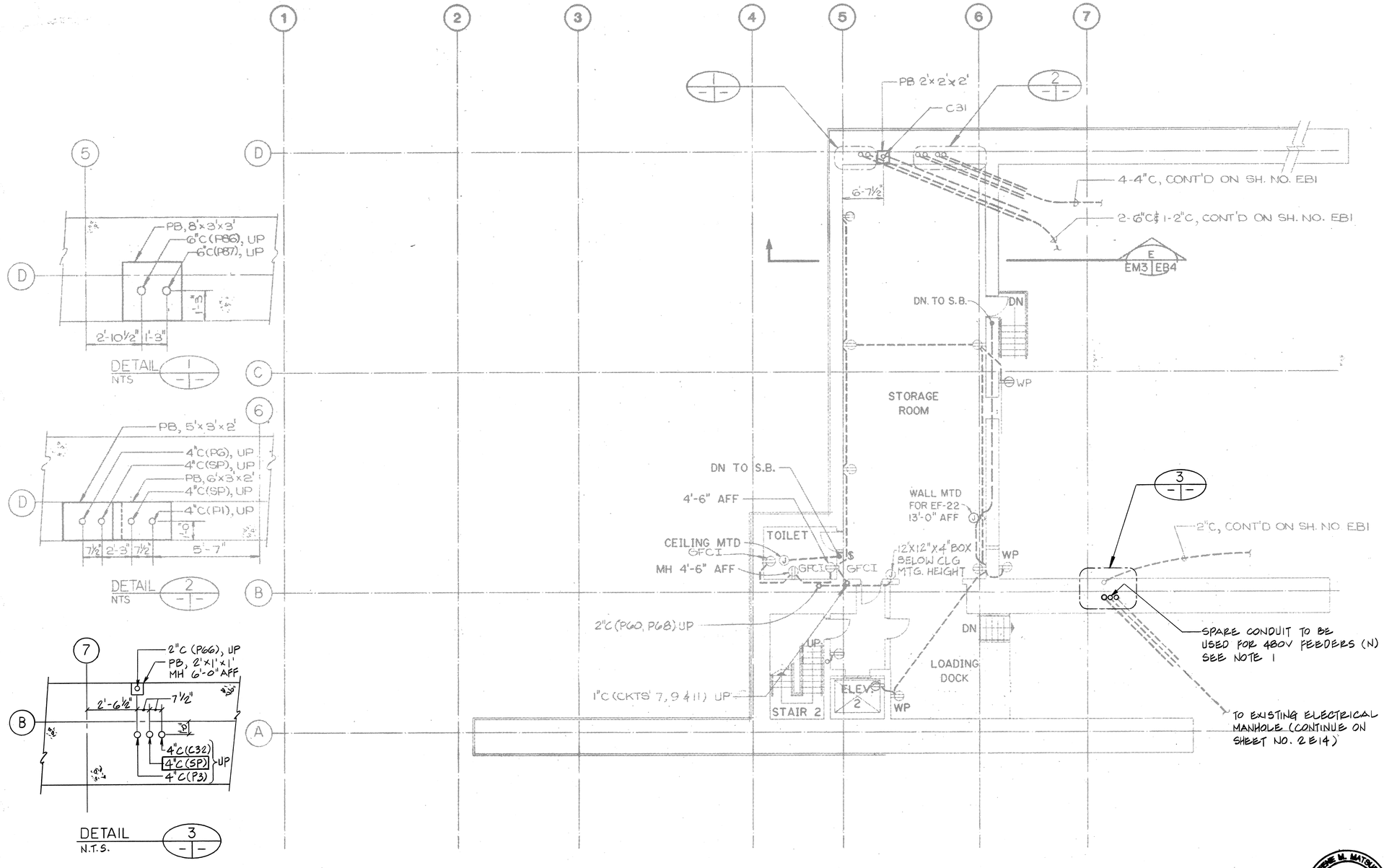

GRAPHIC SCALE

8' 4' 0' 8' 16'

⅛" = 1'-0"

DATE	REVISION

STATE OF HAWAII
DEPARTMENT OF TRANSPORTATION
HIGHWAYS DIVISION

POWER

HAIKU PORTAL IB - LEVEL A

EXPLORATORY TUNNEL IMPROVEMENTS

H-3 FINISH (UNIT III)
FAIP NO. I-H3-1(75), UNIT III
T.K. TUNNEL/ACCESS ROADS

SCALE: 1/8" = 1'-0" DATE: JUN 1995

SHEET NO. 2E15 OF 30 SHEETS

RENE M. MATSUDA
LICENSED PROFESSIONAL ENGINEER
No. 8403-E
HAWAII, U.S.A.

THIS WORK WAS PREPARED BY ME OR UNDER MY SUPERVISION.

Rene Matsuda

		DATE
SURVEY PLOTTED BY		
TRACED BY	L. WANG	NOV 94
DESIGNED BY	T. SANCHEZ	NOV 94
QUANTITIES BY		
CHECKED BY	E. MATSUDA	DEC 94

ORIGINAL PLAN

NO.	NOTE BOOK

2410V153 2410: V153 ES0075.FGB:1 04DEC89-07.35.10

FED. ROAD DIST. NO.	STATE	FED. AID PROJ. NO.	FISCAL YEAR	SHEET NO.	TOTAL SHEETS
HAWAII	HAW.	I-H3-1(75) UNIT III	1994	88	353

N

NOTE:
1. (N) DENOTES WORK IN THIS CONTRACT.

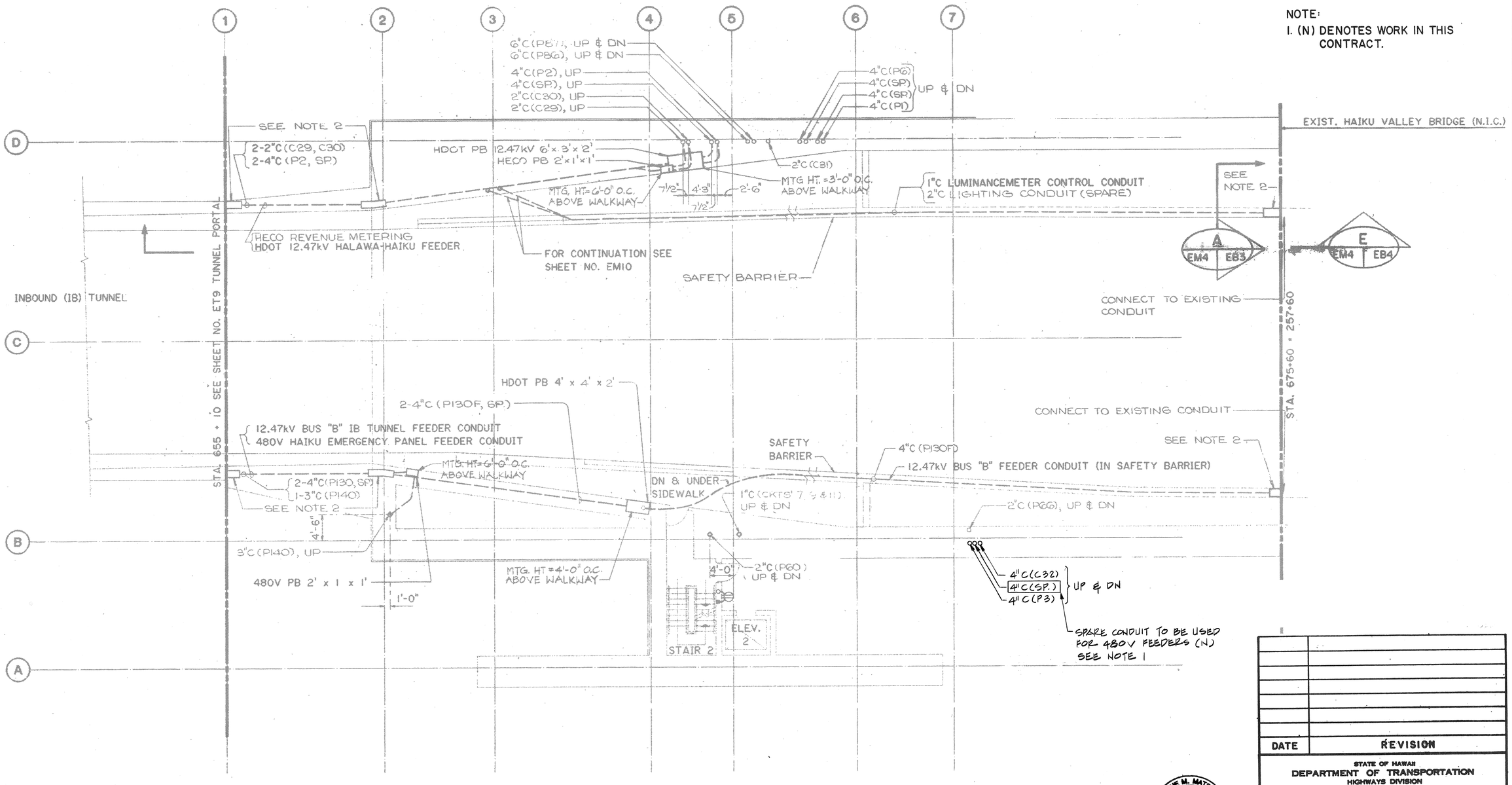

DATE	REVISION

STATE OF HAWAII
DEPARTMENT OF TRANSPORTATION
HIGHWAYS DIVISION

POWER

HAIKU PORTAL IB - LEVEL I

EXPLORATORY TUNNEL IMPROVEMENTS

H-3 FINISH (UNIT III)
FAIP NO. I-H3-1(75), UNIT III
T.K. TUNNEL/ACCESS ROADS

SCALE: 1/8" = 1'-0" DATE: JUN 1995

SHEET NO. 2E16 OF 30 SHEETS

GRAPHIC SCALE
8' 4' 0' 8' 16'
⅛" = 1'-0"

KEENE M. MATSUDA
LICENSED PROFESSIONAL ENGINEER
No. 8453-E
HAWAII, U.S.A.

THIS WORK WAS PREPARED BY ME OR UNDER MY SUPERVISION.

Keene Matsuda

		DATE
ORIGINAL PLAN	SHEET PLOTTED BY	
	SHEET SCANNED BY	
	SHEET TRACED BY	NOV 94
NOTE BOOK	DESIGNED BY	NOV 94
	QUANTITIES BY	
NO.	CHECKED BY	DEC 94

S. KONG
T. SANCHEZ
K. MATSUDA

2410V153 24.0: V153 ES0068.FGB.1 300CT89-08.59.50

FED. ROAD DIST. NO.	STATE	FED. AID PROJ. NO.	FISCAL YEAR	SHEET NO.	TOTAL SHEETS
HAWAII	HAW.	I-H3-1(75) UNIT III	1994	89	353

N

NOTE:

1. (N) DENOTES WORK IN THIS CONTRACT.

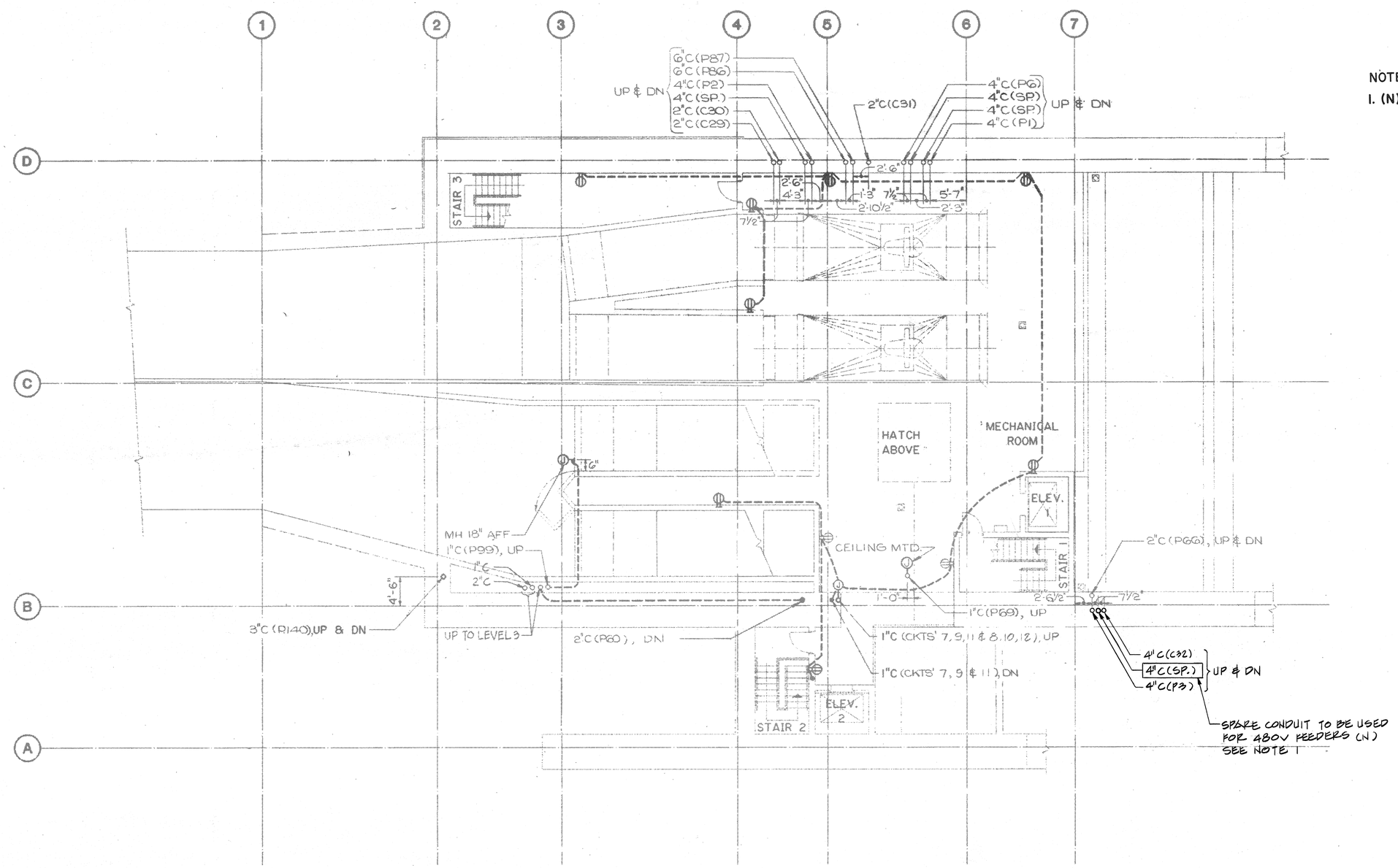

GRAPHIC SCALE

8' 4' 0' 8' 16'

⅛" = 1'-0"

DATE	REVISION

STATE OF HAWAII
DEPARTMENT OF TRANSPORTATION
HIGHWAYS DIVISION

POWER

HAIKU PORTAL IB - LEVEL 2

EXPLORATORY TUNNEL IMPROVEMENTS

H-3 FINISH (UNIT III)
FAIP NO. I-H3-1(75), UNIT III
T.K. TUNNEL/ACCESS ROADS

SCALE: 1/8" = 1'-0" DATE: JUN 1995

SHEET NO. 2E17 OF 30 SHEETS

KEENE M. MATSUDA
LICENSED PROFESSIONAL ENGINEER
No. 8423-E
HAWAII, U.S.A.

THIS WORK WAS PREPARED BY ME OR UNDER MY SUPERVISION.

Keene Matsuda

ORIGINAL PLAN		DATE
	SURVEY PLOTTED BY S. KONG	NOV 94
	DRAWN BY	
NOTE BOOK	TRACED BY	NOV 94
	DESIGNED BY G. SANCHEZ	
	QUANTITIES BY	
NO.	CHECKED BY K. MATSUDA	DEC 94

2410V132 2416: V153 ESL076.FGB r1 08DEC89-11.49.50

FED. ROAD DIST. NO.	STATE	FED. AID PROJ. NO.	FISCAL YEAR	SHEET NO.	TOTAL SHEETS
HAWAII	HAW.	I-H3-1(75) UNIT III	1994	90	353

N

NOTE:
1. (N) DENOTES WORK IN THIS CONTRACT.

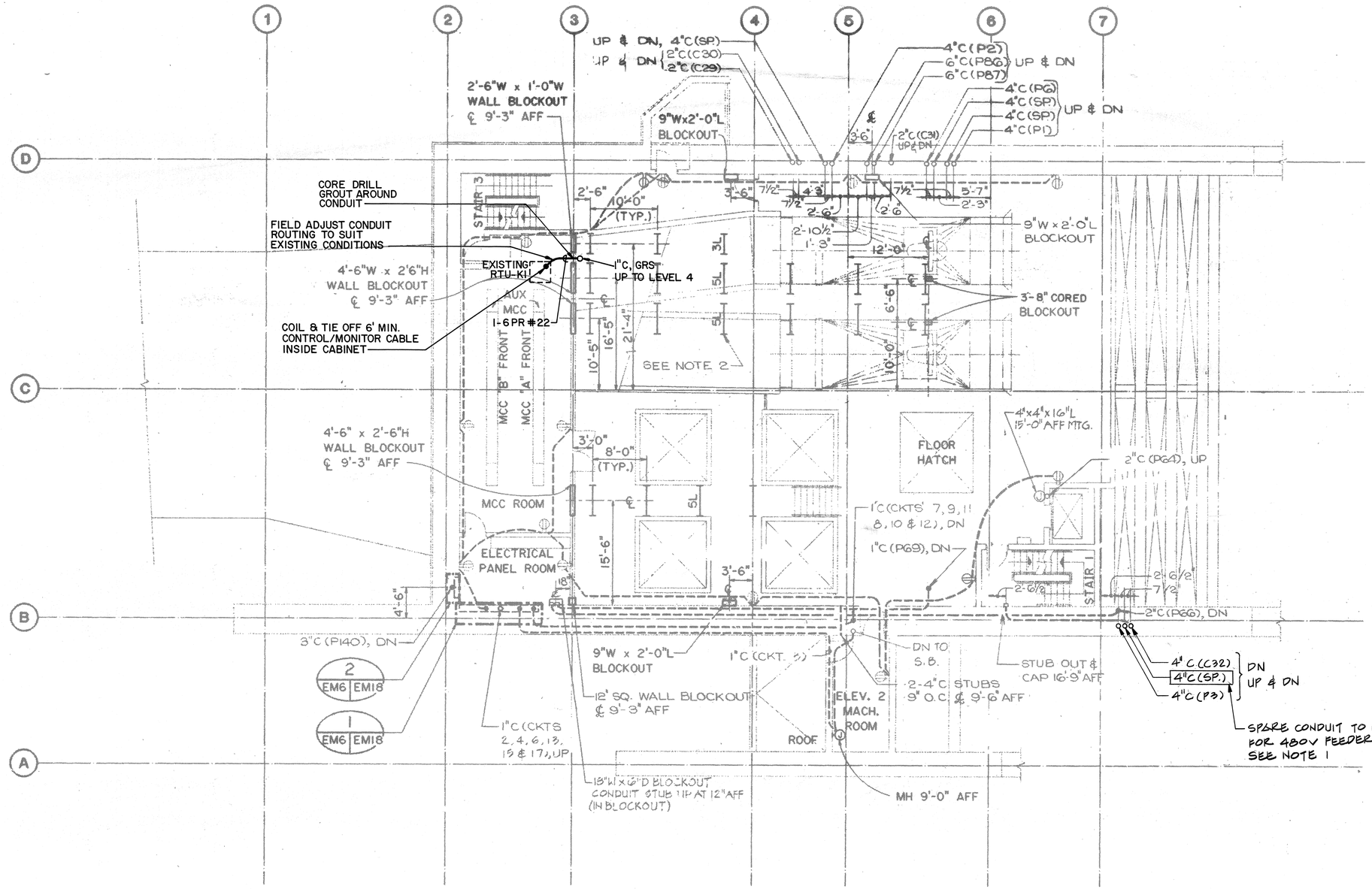

GRAPHIC SCALE
8' 4' 0' 8' 16'
⅛" = 1'-0"

KEENE M. MATSUDA
LICENSED PROFESSIONAL ENGINEER
No. 8403-E
HAWAII, U.S.A.

THIS WORK WAS PREPARED BY ME OR UNDER MY SUPERVISION.
Keene Matsuda

DATE	REVISION
10/27/95	ADDENDUM 2 - ADDED CONTROL/MONITOR CABLE FROM SWITCHGEAR (LEVEL 4) TO EXISTING RTU-K1

STATE OF HAWAII
DEPARTMENT OF TRANSPORTATION
HIGHWAYS DIVISION

POWER
HAIKU PORTAL IB - LEVEL 3
EXPLORATORY TUNNEL IMPROVEMENTS
H-3 FINISH (UNIT III)
FAIP NO. I-H3-1(75), UNIT III
T.K. TUNNEL/ACCESS ROADS

SCALE: 1/8" = 1'-0" DATE: JUN 1995

SHEET NO. 2E18 OF 30 SHEETS

ORIGINAL PLAN		DATE
	SURVEY PLOTTED BY	
	DRAWN BY S. KONG	NOV 94
NOTE BOOK	TRACED BY	
	DESIGNED BY T. SANDIEG	NOV 94
NO.	QUANTITIES BY	
	CHECKED BY K. MATSUDA	DEC 94

2410V15% 2410: V153 ES0069.FGB:1 15DEC89-13.58.00

ADD. 90

FED. ROAD DIST. NO.	STATE	FED. AID PROJ. NO.	FISCAL YEAR	SHEET NO.	TOTAL SHEETS
HAWAII	HAW.	I-H3-1(75) UNIT III	1994	91	353

N

NOTE:
1. (N) DENOTES WORK IN THIS CONTRACT.

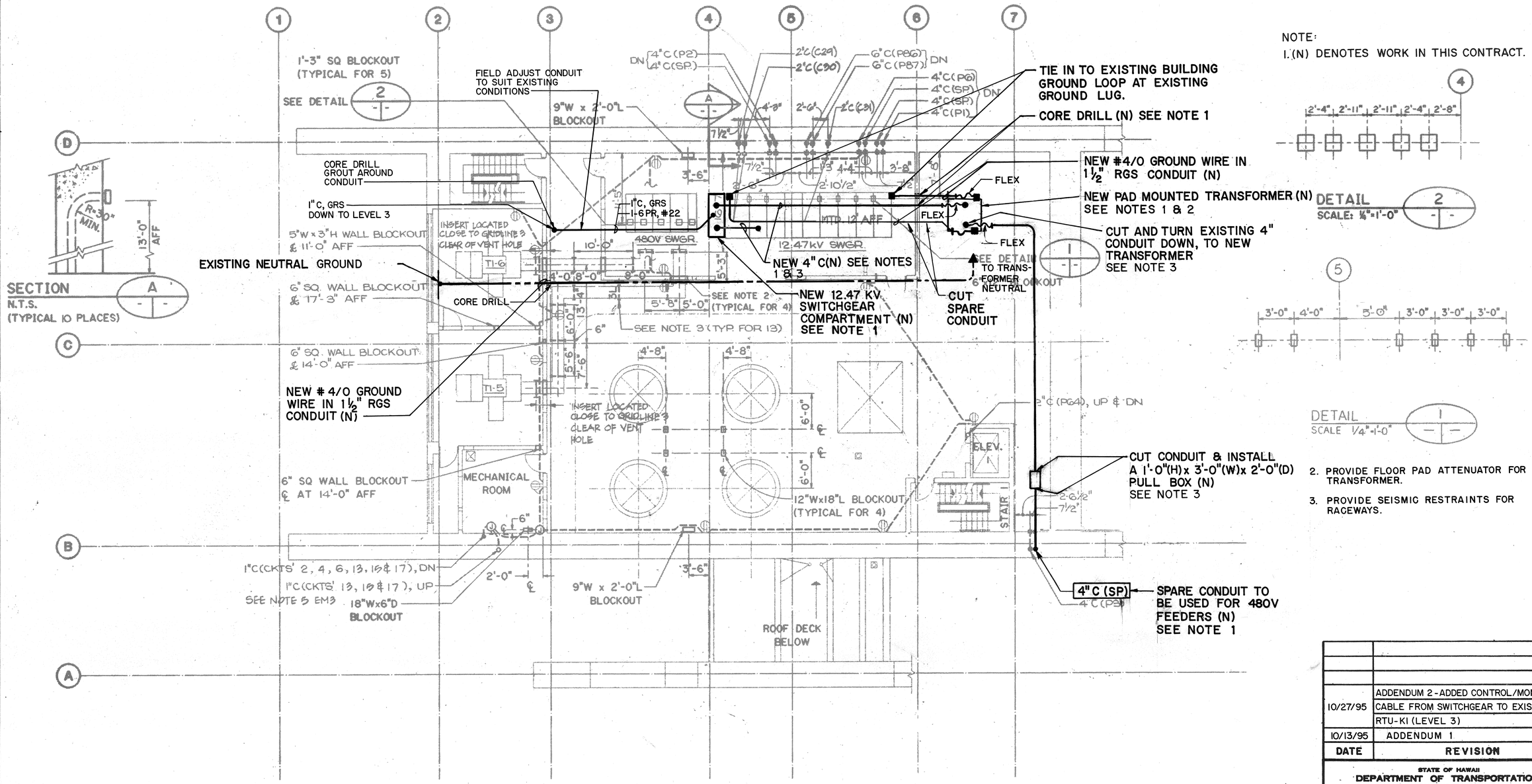

2. PROVIDE FLOOR PAD ATTENUATOR FOR TRANSFORMER.
3. PROVIDE SEISMIC RESTRAINTS FOR RACEWAYS.

10/27/95	ADDENDUM 2 - ADDED CONTROL/MONITOR CABLE FROM SWITCHGEAR TO EXISTING RTU-K1 (LEVEL 3)
10/13/95	ADDENDUM 1
DATE	REVISION

STATE OF HAWAII
DEPARTMENT OF TRANSPORTATION
HIGHWAYS DIVISION

POWER

HAIKU PORTAL IB - LEVEL 4

EXPLORATORY TUNNEL IMPROVEMENTS

H-3 FINISH (UNIT III)
FAIP NO. I-H3-1(75), UNIT III
T.K. TUNNEL/ACCESS ROADS

SCALE: AS NOTED DATE: JUN 1995

SHEET NO. 2E19 OF 30 SHEETS

KEENE M. MATSUDA
LICENSED PROFESSIONAL ENGINEER
No. 8439-E
HAWAII, U.S.A.

THIS WORK WAS PREPARED BY ME OR UNDER MY SUPERVISION.
Keene Matsuda

GRAPHIC SCALE
8' 4' 0' 8' 16'
⅛" = 1'-0"
4' 2' 0' 4' 8'
¼" = 1'-0"

ORIGINAL PLAN		DATE
NOTE BOOK	SURVEY PLOTTED BY S. KONG	NOV 94
	DRAWN BY "	"
	TRACED BY "	NOV 94
	DESIGNED BY I. SANCHEZ	NOV 94
	QUANTITIES BY "	"
NO.	CHECKED BY K. MATSUDA	DEC 94

2410V153 2410: V153 CS0073.FGB,1 15DEC83 14.41.00

FED. ROAD DIST. NO.	STATE	FED. AID PROJ. NO.	FISCAL YEAR	SHEET NO.	TOTAL SHEETS
HAWAII	HAW.	I-H3-1(75) UNIT III	1994	92	353

CROSS PASSAGE NO.	CONTINUATION OF LIGHTING CONDUIT	CONTINUATION OF POWER CONDUIT	EXHAUST FAN
1	2E2	2E5	EF-105
5	2E3	2E6	EF-107
9	2E4	2E7	EF-109
3	2E2	2E5	EF-106
7	2E3	2E6	EF-108

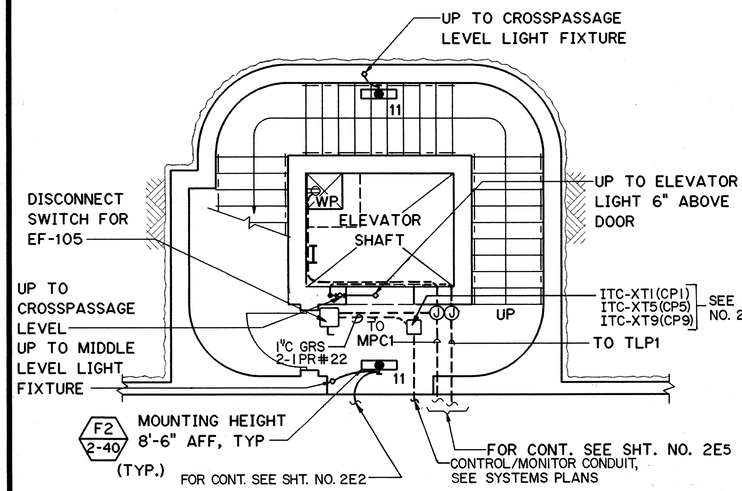

PLAN AT EXPLORATORY TUNNEL LEVEL

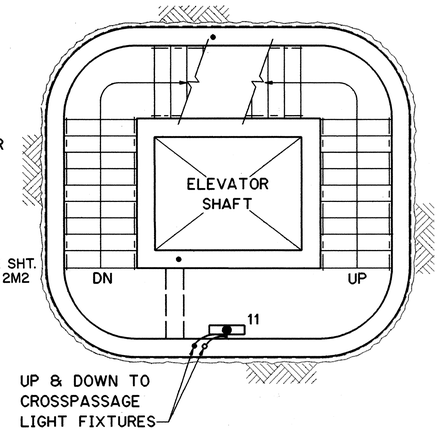

PLAN AT MIDDLE LEVEL

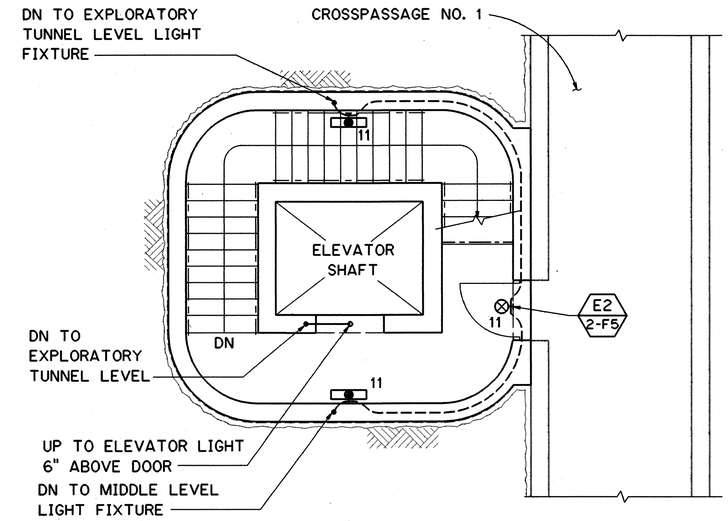

PLAN AT CROSSPASSAGE LEVEL

INSTALLATION FOR CROSSPASSAGE 1
(TYPICAL FOR CROSSPASSAGES 5 & 9)

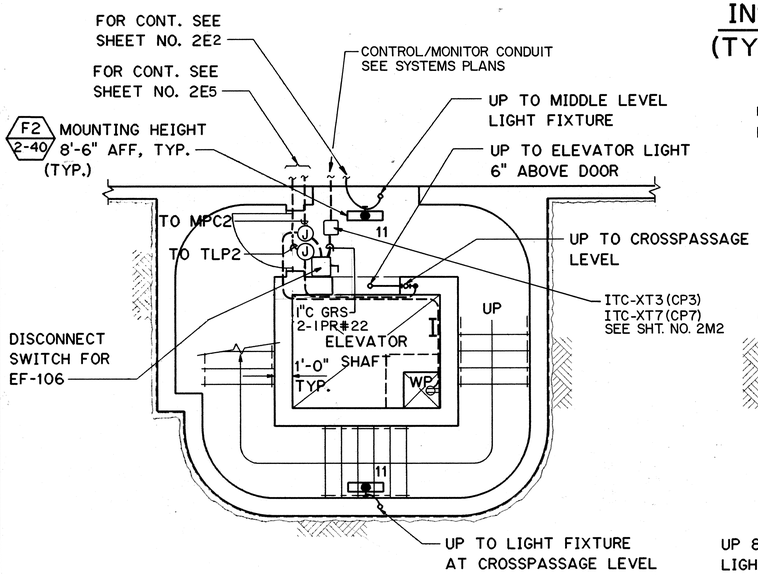

PLAN AT EXPLORATORY TUNNEL LEVEL

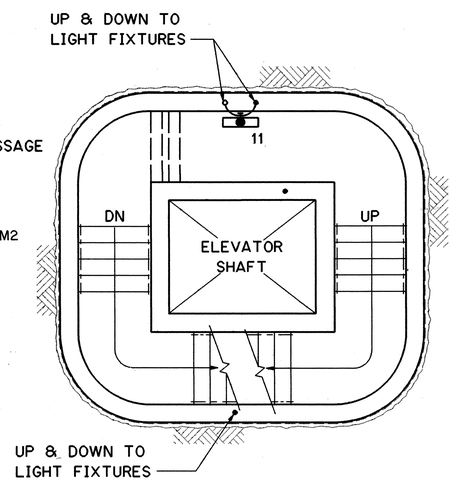

PLAN AT MIDDLE LEVEL

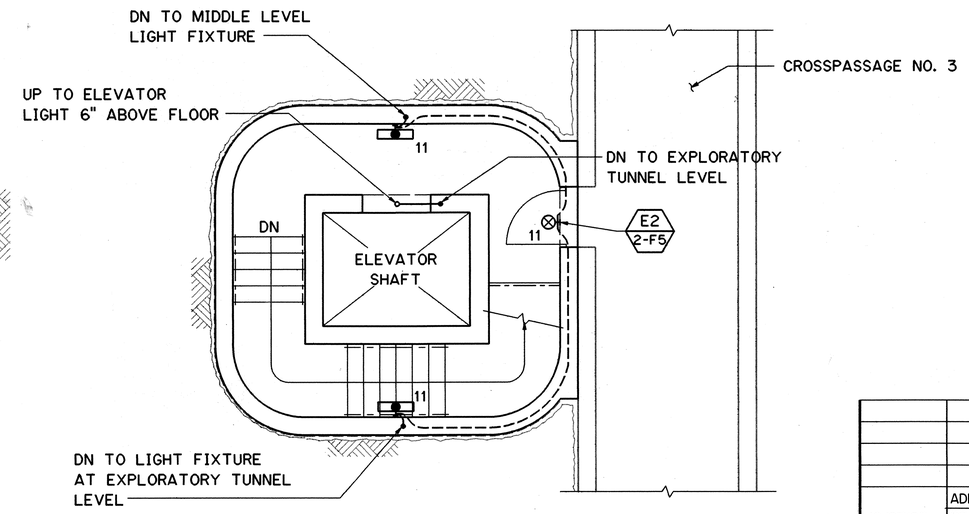

PLAN AT CROSSPASSAGE LEVEL

INSTALLATION FOR CROSSPASSAGE NO. 3
(TYPICAL FOR CROSSPASSAGE 7)

NOTE:
1. CONTROL FOR EXHAUST FANS IS BY ROOM THERMOSTAT OR THE LIGHTING CONTACTOR FROM LIGHTING CONTROL (LC) PANEL.

GRAPHIC SCALE
4' 2' 0' 4' 8'
¼" = 1'-0"

KEENE M. MATSUDA
LICENSED PROFESSIONAL ENGINEER
NO. 8493-E
HAWAII, U.S.A.

THIS WORK WAS PREPARED BY ME OR UNDER MY SUPERVISION

Keene Matsuda

DATE	REVISION
10/27/95	ADDENDUM 2-REVISED CONT. SHT. NOS., RELOCATED FAN DISCONNECT, POWER & LTG. JB'S, IDENTIFIED ITC'S.

STATE OF HAWAII
DEPARTMENT OF TRANSPORTATION
HIGHWAYS DIVISION

POWER & LIGHTING
C.P. CONNECTION PLAN
EXPLORATORY TUNNEL IMPROVEMENTS
H-3 FINISH (UNIT III)
FAIP NO. I-H3-1(75), UNIT III
T.K. TUNNEL/ACCESS ROADS

SCALE: 1/4"=1'-0" DATE: JUN 1995

SHEET NO. 2E20 OF 30 SHEETS

ORIGINAL PLAN		DATE
SURVEY PLOTTED BY		
DRAWN BY	R. J. HERNANDEZ	NOV 94
TRACED BY		
DESIGNED BY	T. SANCHEZ	NOV 94
QUANTITIES BY		
CHECKED BY	K. MATSUDA	DEC 94
NOTE BOOK		
NO.		

HERNANDEZ ELWOOD:::2410:[DWG.ELECT]E019.FGB71 12JUN95-13.54.30

ADD. 92

FED. ROAD DIST. NO.	STATE	FED. AID PROJ. NO.	FISCAL YEAR	SHEET NO.	TOTAL SHEETS
HAWAII	HAW.	I-H3-1(75) UNIT III	1994	93	353

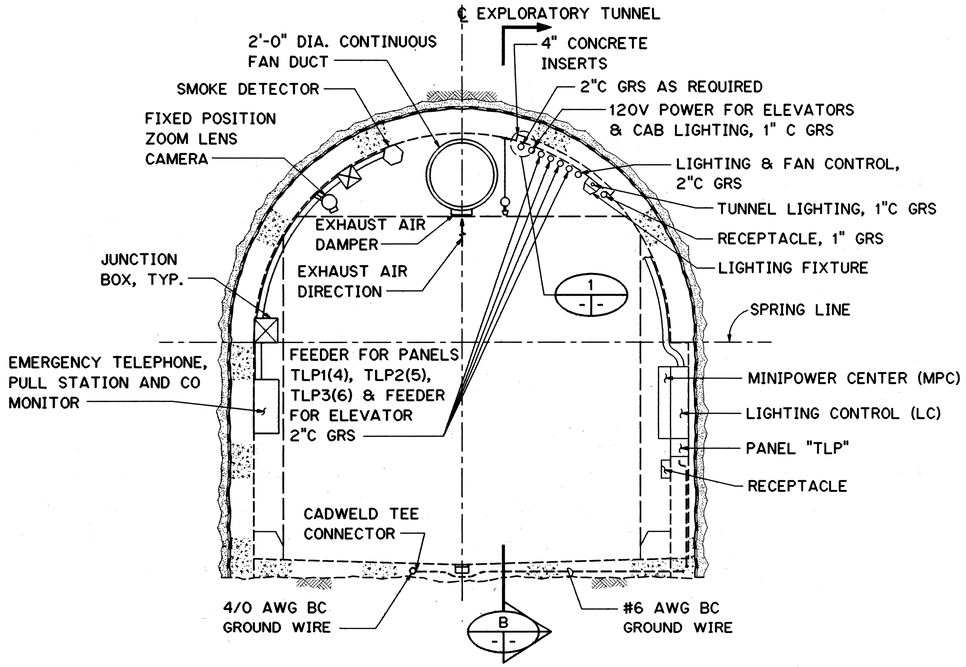

TYPICAL TUNNEL

SECTION A
SCALE: ½"=1'-0"

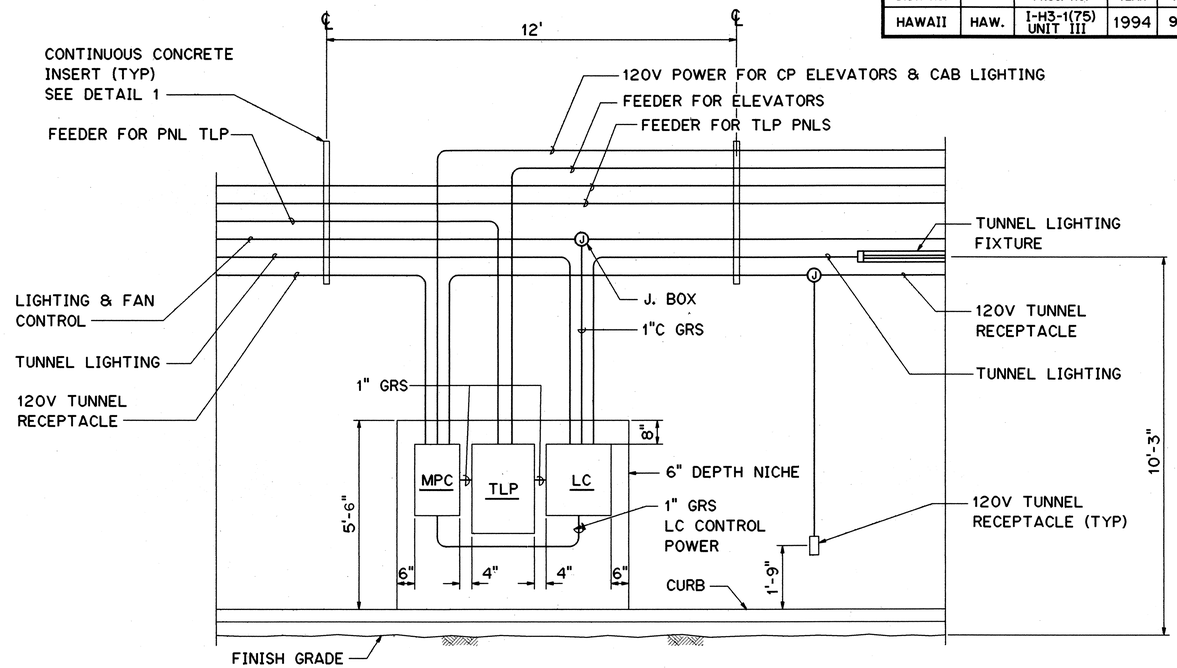

TYPICAL PANEL ARRANGEMENT

SECTION B
SCALE: ½"=1'-0"

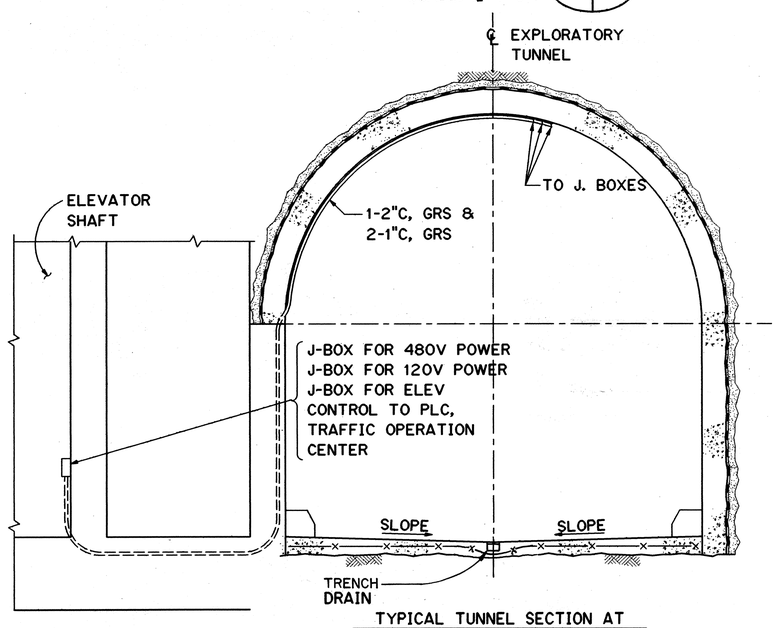

TYPICAL TUNNEL SECTION AT CROSSPASSAGES WITH ELEVATORS

SECTION C
SCALE: ½"=1'-0"

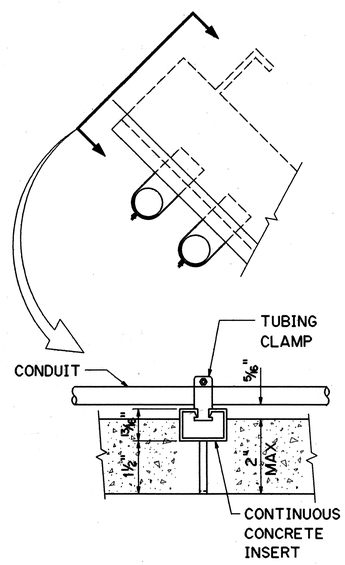

DETAIL 1
NTS

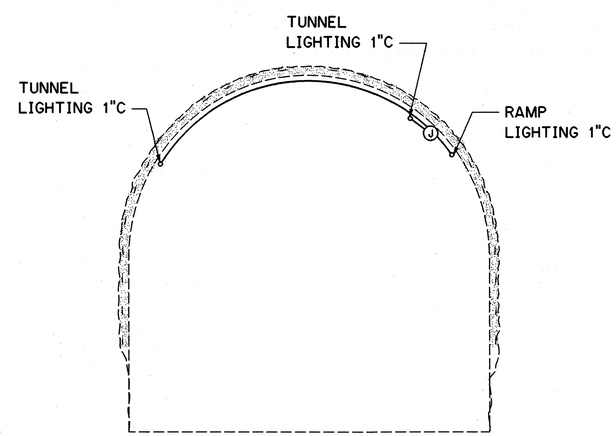

EXPLORATORY TUNNEL RAMP ENTRANCE

SECTION D
SCALE: ⅜"=1'-0"

GRAPHIC SCALE
2' 1' 0' 2' 4'
½" = 1'-0"

NOTES:

1. REFER TO TUNNEL POWER & TUNNEL LIGHTING DRAWINGS FOR ROUTING AND NUMBER OF CONDUITS REQUIRED THROUGHOUT THE TUNNEL

KEENE W. MATSUDA
LICENSED PROFESSIONAL ENGINEER
No. 8493-E
HAWAII, U.S.A.

THIS WORK WAS PREPARED BY ME OR UNDER MY SUPERVISION

Keene Matsuda

DATE	REVISION
8/21/96	DCN 75-007: REV. ET DRAIN

STATE OF HAWAII
DEPARTMENT OF TRANSPORTATION
HIGHWAYS DIVISION

SECTIONS & DETAILS

EXPLORATORY TUNNEL IMPROVEMENTS
H-3 FINISH (UNIT III)
FAIP NO. I-H3-1(75), UNIT III
T.K. TUNNEL/ACCESS ROADS

SCALE: AS NOTED DATE: JUN 1995

SHEET NO. 2E21 OF 30 SHEETS

		DATE
SURVEY PLOTTED BY		
DRAWN BY	R. J. HERNANDEZ	NOV 94
TRACED BY		
DESIGNED BY	T. SANCHEZ	NOV 94
QUANTITIES BY		
CHECKED BY	K. MATSUDA	DEC 94

ORIGINAL PLAN
NOTE BOOK
NO.

HERNANDEZ ELWOOD::2410:IDWG.ELECTJE023.FGB71 26JAN95-18.26.00

FED. ROAD DIST. NO.	STATE	FED. AID PROJ. NO.	FISCAL YEAR	SHEET NO.	TOTAL SHEETS
HAWAII	HAW.	I-H3-1(75) UNIT III	1994	94	353

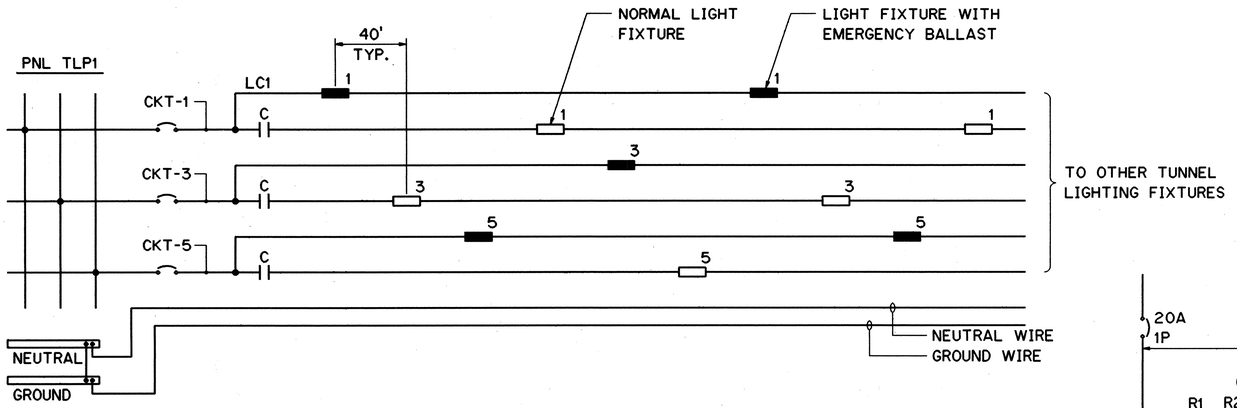

TLP1 TUNNEL LIGHTING CIRCUIT DIAGRAM

(TYP. FOR TLP2, TLP3, TLP4, TLP5 AND TLP6)

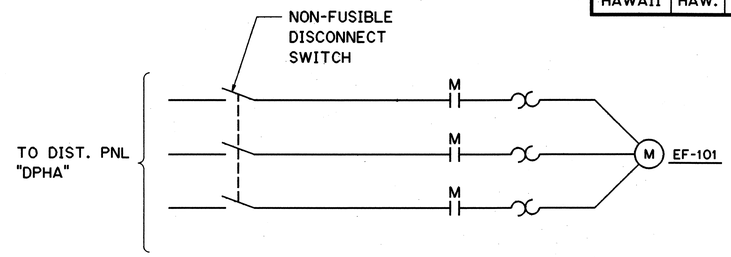

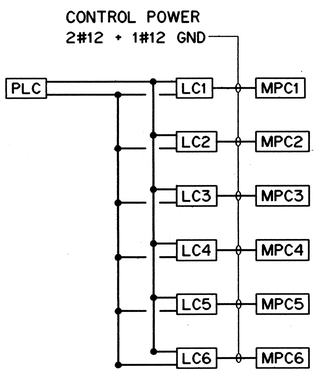

BLOCK DIAGRAM

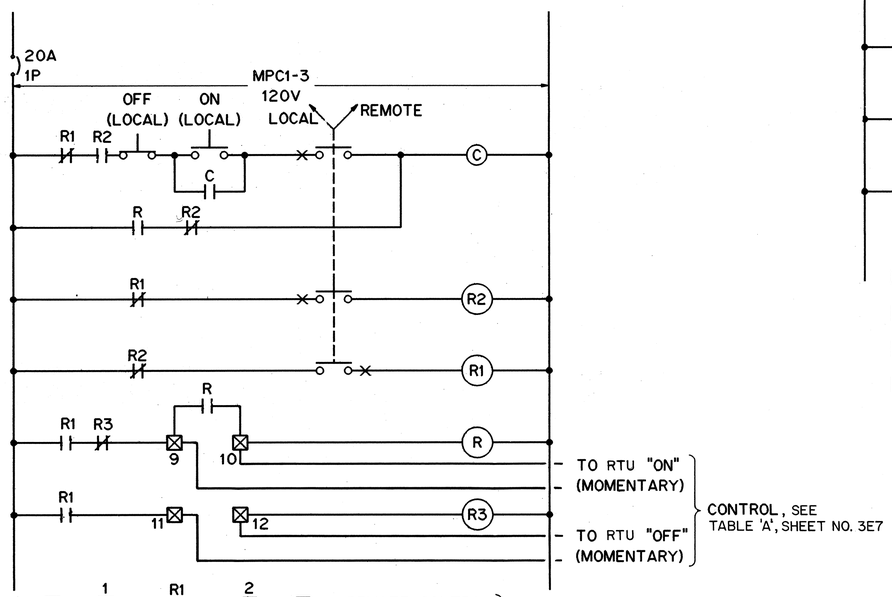

LC-1 CONTROL DIAGRAM

(TYP. FOR LC-2, LC-3, LC-4, LC-5 AND LC-6)

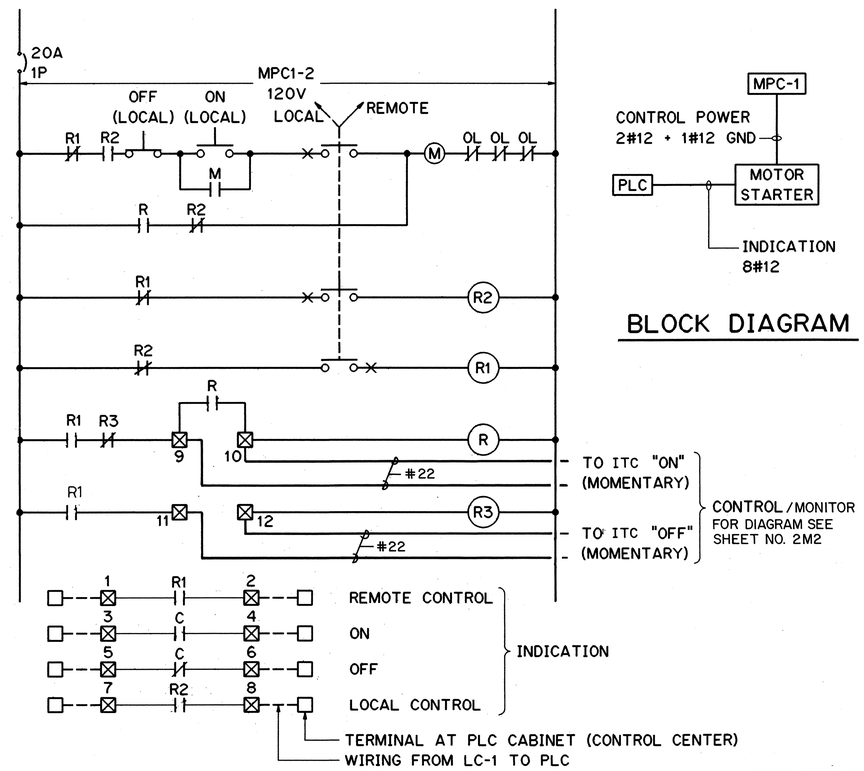

EF-101 CONTROL DIAGRAM

(TYPICAL FOR EF-102)

BLOCK DIAGRAM

NOTES:

1. RELAY R1 AND R2 NORMALLY OPEN AND NORMALLY CLOSED. CONTACTS SHALL BE CAPABLE OF CARRYING CLOSING COIL CURRENT OR TUNNEL LIGHTING AND MOTOR CONTACTOR.

KEENE M. MATSUDA LICENSED PROFESSIONAL ENGINEER No. 8493-E HAWAII, U.S.A.

THIS WORK WAS PREPARED BY ME OR UNDER MY SUPERVISION

DATE	REVISION
10/27/95	ADDENDUM 2 - ADDED CLARIFICATION OF CONTROL/MONITOR WIRING

STATE OF HAWAII
DEPARTMENT OF TRANSPORTATION
HIGHWAYS DIVISION

ELEMENTARY DIAGRAM

EXPLORATORY TUNNEL IMPROVEMENTS
H-3 FINISH (UNIT III)
FAIP NO. I-H3-1(75), UNIT III
T.K. TUNNEL/ACCESS ROADS

SCALE: NONE DATE: JUN 1995

SHEET NO. 2E22 OF 30 SHEETS

ORIGINAL PLAN		DATE
	SURVEY PLOTTED BY	
	DRAWN BY	R. J. HERNANDEZ NOV 94
	TRACED BY	
	DESIGNED BY	T. SANCHEZ NOV 94
NOTE BOOK	QUANTITIES BY	
NO.	CHECKED BY	K. MATSUDA DEC 94

HERNANDEZ ELWOOD::2410:[DWG.ELECT]E017.FGB/T 25JAN95-14.33.30

ADD. 94

FED. ROAD DIST. NO.	STATE	FED. AID PROJ. NO.	FISCAL YEAR	SHEET NO.	TOTAL SHEETS
HAWAII	HAW.	I-H3-1(75) UNIT III	1994	95	353

LIGHTING FIXTURE SCHEDULE

SYMBOL	DESCRIPTION	MANUFACTURER	LAMP	INPUT POWER	INPUT VOLTAGE
- / -	NOT USED	-	-	-	-
F2 / 2-40	WRAPAROUND LIGHTING FIXTURE COMPLETE W/ BATTERY AND CHARGERS FOR 90 MIN. OF EMERGENCY OPERATION, WALL MOUNTED	DAY-BRITE LIGHTING KEYSTONE	2-F40T12 CW/RS	100VA	277V
T1 / 2-40	TUNNEL LIGHTING FIXTURE WALL MOUNTED	NU-ART TNL-1-48+48-96 RS1500MA-277	2-F40T12 CW/RS	100VA	277V
T2 / 2-40	SAME AS T1 BUT COMPLETE WITH BATTERY AND CHARGERS FOR 90 MIN. OF EMERGENCY OPERATION	NU-ART TNL-1-48+48-96 RS1500MA-277	2-F40T12 CW/RS	100VA	277V
E2 / 2-F5	EXIT SIGN FIXTURE ENCLOSED AND GASKETED, COMPLETE WITH BATTERY AND CHARGERS.	LITHONIA SYLVANIA GENERAL ELECTRIC	2-F5	12VA	277V
E1 / 2-F5	SAME AS E2 EXCEPT FOR DIRECTIONAL ARROW RIGHT	LITHONIA SYLVANIA GENERAL ELECTRIC	2-F5	12VA	277V
E3 / 2-F5	SAME AS E2 EXCEPT FOR DIRECTIONAL ARROW LEFT	LITHONIA SYLVANIA GENERAL ELECTRIC	2-F5	12VA	277V
H1 / 150	ROADWAY LUMINAIRE WITH A 4' ARM ON A 25' POLE	GE M2RC15S4H2GM3 EMCO GUARDCO	150W HPS	200VA	277V

ORIGINAL PLANS		
	SURVEY PLOTTED BY	DATE
	DRAWN BY R. J. HERNANDEZ	NOV 94
	TRACED BY	
NOTE BOOK	DESIGNED BY T. SANCHEZ	NOV 94
	QUANTITIES BY	
NO.	CHECKED BY K. MATSUDA	DEC 94

KEENE M. MATSUDA
LICENSED PROFESSIONAL ENGINEER
NO. 8493-E
HAWAII, U.S.A.

THIS WORK WAS PREPARED BY ME OR UNDER MY SUPERVISION

Keene Matsuda

DATE	REVISION

STATE OF HAWAII
DEPARTMENT OF TRANSPORTATION
HIGHWAYS DIVISION

LIGHTING FIXTURE SCHEDULE

EXPLORATORY TUNNEL IMPROVEMENTS
H-3 FINISH (UNIT III)
FAIP NO. I-H3-1(75), UNIT III
T.K. TUNNEL/ACCESS ROADS

SCALE: AS NOTED DATE: JUN 1995

SHEET NO. 2E23 OF 30 SHEETS

HERNANDEZ ELWOOD:::2410:DWG.ELECTJE025.FGB71 12JUN95-13.26.20

FED. ROAD DIST. NO.	STATE	FED. AID PROJ. NO.	FISCAL YEAR	SHEET NO.	TOTAL SHEETS
HAWAII	HAW.	I-H3-1(75) UNIT III	1994	96	353

SYSTEM: 480Y/277V, 100A, 3Ø, 4W PANEL - TLP1
MAINS: 100A 3P
SHORT CIRCUIT RATING: 14KAIC
PANEL LOCATION: EXPLORATORY TUNNEL
SUPPLY LOCATION: T.O.C. EXPANSION, PARKING LEVEL HALAWA SITE, PNL "DPHA"

SERVICE	CKT. NO.	LOAD kVA A	B	C	CIRCUIT BREAKER FRAME	POLES	TRIP	WIRE AWG				WIRE AWG	CIRCUIT BREAKER TRIP	POLES	FRAME	LOAD kVA A	B	C	CKT. NO.	SERVICE
TNL LIGHTING	1	0.82			100	1	20	12				10	40	3	100	5.00			2	ELEVATORS
TNL LIGHTING	3		0.80		100	1	20	12									5.00		4	↓
TNL LIGHTING	5			0.82	100	1	20	12										5.00	6	↓
MPC1	7	5.0			100	2	30	10					40	3					8	SPARE
↓	9		5.0																10	↓
CP#1 STAIR LTG.	11			0.6	100	1	20	12											12	↓
SPARE	13				100	2	30												14	SPARE
↓	15												20	1	100				16	SPARE
ACCESS RD. LTG.	17			0.2	100	1	20	12					20	1	100				18	SPARE
POWER DOOR LOCK HALAWA PORTAL	19			0.1	100	1	20	12					20	1	100				20	SPARE
SUBTOTAL		5.82	5.80	1.72												5.0	5.0	5.0		

	A	B	C
	10.82	10.80	6.72
	10.82	10.80	6.72

TOTAL CONNECTED = 28.34 kVA
ESTIMATED MAXIMUM DEMAND = 28.34 kVA

SYSTEM: 480Y/277V, 100A, 3Ø, 4W PANEL - TLP2
MAINS: 100A, 3P
SHORT CIRCUIT RATING: 14KAIC
PANEL LOCATION: EXPLORATORY TUNNEL
SUPPLY LOCATION: T.O.C. EXPANSION, PARKING LEVEL HALAWA SITE, PNL "DPHA"

SERVICE	CKT. NO.	LOAD kVA A	B	C	CIRCUIT BREAKER FRAME	POLES	TRIP	WIRE AWG				WIRE AWG	CIRCUIT BREAKER TRIP	POLES	FRAME	LOAD kVA A	B	C	CKT. NO.	SERVICE
TNL LIGHTING	1	0.82			100	1	20	12				10	40	3	100	5.00			2	ELEVATORS
TNL LIGHTING	3		0.80		100	1	20	12									5.00		4	↓
TNL LIGHTING	5			0.82	100	1	20	12										5.00	6	↓
MPC2	7	5.0			100	2	30	10					40	3	100				8	SPARE
↓	9		5.0																10	↓
CP#3 STAIR LTG.	11			0.6	100	1	20	12											12	↓
SPARE	13				100	2	30						20	1	100				14	SPARE
↓	15												20	1	100				16	SPARE
SPARE	17				100	1	20						20	1	100				18	SPARE
SPARE	19				100	1	20						20	1	100				20	SPARE
SUBTOTAL		5.82	5.80	1.42												5.0	5.0	5.0		

	A	B	C
	10.82	10.80	6.42
	10.82	10.80	6.42

TOTAL CONNECTED = 28.04 kVA
ESTIMATED MAXIMUM DEMAND = 28.04 kVA

SYSTEM: 480Y/277V, 100A, 3Ø, 4W PANEL - TLP3
MAINS: 100A, 3P
SHORT CIRCUIT RATING: 14KAIC
PANEL LOCATION: EXPLORATORY TUNNEL
SUPPLY LOCATION: T.O.C. EXPANSION, PARKING LEVEL HALAWA SITE, PNL "DPHA"

SERVICE	CKT. NO.	LOAD kVA A	B	C	CIRCUIT BREAKER FRAME	POLES	TRIP	WIRE AWG				WIRE AWG	CIRCUIT BREAKER TRIP	POLES	FRAME	LOAD kVA A	B	C	CKT. NO.	SERVICE
TNL, LIGHTING	1	0.70			100	1	20	12				10	40	3	100	5.00			2	ELEVATOR
TNL, LIGHTING	3		0.70		100	1	20	12									5.00		4	↓
TNL, LIGHTING	5			0.70	100	1	20	12										5.00	6	↓
MPC3	7	5.0			100	2	20	10					40	3	100				8	SPARE
↓	9		5.0																10	↓
CP#5 STAIR LTG.	11			0.54	100	1	20	12											12	↓
SPARE	13				100	2	30						20	1	100				14	SPARE
↓	15												20	1	100				16	SPARE
SPARE	17				100	1	20						20	1	100				18	SPARE
SPARE	19				100	1	20						20	1	100				20	SPARE
SUBTOTAL		5.7	5.7	1.24												5.0	5.0	5.0		

	A	B	C
	10.7	10.7	6.24
	10.7	10.7	6.24

TOTAL CONNECTED = 27.64 kVA
ESTIMATED MAXIMUM DEMAND = 27.64 kVA

SYSTEM: 480/277V, 100A, 3Ø, 4W PANEL - TLP4
MAINS: 100A, 3P
SHORT CIRCUIT RATING: 14KAIC
PANEL LOCATION: EXPLORATORY TUNNEL
SUPPLY LOCATION: HAIKU PORTAL BLDG, LEVEL 4

SERVICE	CKT. NO.	LOAD kVA A	B	C	CIRCUIT BREAKER FRAME	POLES	TRIP	WIRE AWG				WIRE AWG	CIRCUIT BREAKER TRIP	POLES	FRAME	LOAD kVA A	B	C	CKT. NO.	SERVICE
TNL LIGHTING	1	0.70			100	1	20	12					30	2	100				2	SPARE
TNL LIGHTING	3		0.70		100	1	20	12											4	↓
TNL LIGHTING	5			0.72	100	1	20	12					20	1	100				6	SPARE
MPC4	7	5.0			100	2	30	10					20	1	100				8	SPARE
↓	9		5.0										20	1	100				10	SPARE
SPARE	11				100	1	20						20	1	100				12	SPARE
SPARE	13				100	1	20						20	1	100				14	SPARE
SPACE	15																		16	SPACE
SPACE	17																		18	SPACE
SPACE	19																		20	SPACE
SUBTOTAL		5.7	5.7	0.72												0.0	0.0	0.0		

	A	B	C
	5.7	5.7	0.72
	5.7	5.7	0.72

TOTAL CONNECTED = 12.12 kVA
ESTIMATED MAXIMUM DEMAND = 12.12 kVA

DATE	REVISION
5/29/97	DCN75-019: IDENTIFIED CIRCUIT FOR HALAWA PORTAL POWER DOOR LOCK PANEL TLP1

KEENE M. MATSUDA
LICENSED PROFESSIONAL ENGINEER
NO. 8493-E
HAWAII, U.S.A.

THIS WORK WAS PREPARED BY ME OR UNDER MY SUPERVISION

STATE OF HAWAII
DEPARTMENT OF TRANSPORTATION
HIGHWAYS DIVISION

PANEL SCHEDULES - 1

EXPLORATORY TUNNEL IMPROVEMENTS
H-3 FINISH (UNIT III)
FAIP NO. I-H3-1(75), UNIT III
T.K. TUNNEL/ACCESS ROADS

SCALE: NONE DATE: JUN 1995

SHEET NO. 2E24 OF 30 SHEETS

ORIGINAL PLAN	SURVEY PLOTTED BY	DATE
	DRAWN BY R. J. HERNANDEZ	NOV 94
NOTE BOOK	TRACED BY	
	DESIGNED BY T. SANCHEZ	NOV 94
NO.	QUANTITIES BY	
	CHECKED BY K. MATSUDA	NOV 94

HERNANDEZ ELWOOD:::2410:DWG.ELECTJE020.FGB71 12JUN95-13.31.50

C.O. 96

FED. ROAD DIST. NO.	STATE	FED. AID PROJ. NO.	FISCAL YEAR	SHEET NO.	TOTAL SHEETS
HAWAII	HAW.	I-H3-1(75) UNIT III	1994	97	353

SYSTEM: 480Y/277V, 100A, 3Ø, 4W PANEL - TLP5 PANEL LOCATION: EXPLORATORY TUNNEL
MAINS: 100A, 3P SUPPLY LOCATION: HAIKU PORTAL BLDG, LEVEL 3
SHORT CIRCUIT RATING: 14KAIC PNL "DPHU"

SERVICE	CKT. NO.	LOAD kVA A	LOAD kVA B	LOAD kVA C	CIRCUIT BREAKER FRAME	CIRCUIT BREAKER POLES	CIRCUIT BREAKER TRIP	WIRE AWG				WIRE AWG	CIRCUIT BREAKER TRIP	CIRCUIT BREAKER POLES	CIRCUIT BREAKER FRAME	LOAD kVA A	LOAD kVA B	LOAD kVA C	CKT. NO.	SERVICE
TNL LIGHTING	1	0.82			100	1	20	12				10	40	3		5.00			2	ELEVATOR
TNL LIGHTING	3		0.80		100	1	20	12						3			5.00		4	↓
TNL LIGHTING	5			0.82	100	1	20	12						3	100			5.00	6	↓
MPC5	7	5.0			100	2	30	10					40	3	100				8	SPARE
↓	9		5.0																10	↓
CP#7 STAIR LTG.	11			0.6	100	1	20	12											12	↓
SPARE	13				100	2	30						20	1	100				14	SPARE
↓	15												20	1	100				16	SPARE
SPARE	17				100	1	20						20	1	100				18	SPARE
SPARE	19				100	1	20						20	1	100				20	SPARE
SUBTOTAL		5.82	5.8	1.42												5.0	5.0	5.0		

	A	B	C
	10.82	10.80	6.42
	10.82	10.80	6.42

TOTAL CONNECTED =28.04kVA
ESTIMATED MAXIMUM DEMAND =28.04kVA

SYSTEM: 480Y/277V, 100A, 3Ø, 4W PANEL - TLP6 PANEL LOCATION: EXPLORATORY TUNNEL
MAINS: 100A, 3P SUPPLY LOCATION: HAIKU PORTAL BLDG, LEVEL 3
SHORT CIRCUIT RATING: 14KAIC PNL "DPHU"

SERVICE	CKT. NO.	LOAD kVA A	LOAD kVA B	LOAD kVA C	CIRCUIT BREAKER FRAME	CIRCUIT BREAKER POLES	CIRCUIT BREAKER TRIP	WIRE AWG				WIRE AWG	CIRCUIT BREAKER TRIP	CIRCUIT BREAKER POLES	CIRCUIT BREAKER FRAME	LOAD kVA A	LOAD kVA B	LOAD kVA C	CKT. NO.	SERVICE
TNL LIGHTING	1	0.9			100	1	20	12				10	40	3	100	5.00			2	ELEVATOR
TNL LIGHTING	3		0.9		100	1	20	12									5.00		4	↓
TNL LIGHTING	5			1.14	100	1	20	12										5.00	6	↓
MPC6	7	5.0			100	2	30	10					40	3	100				8	SPARE
↓	9		5.0																10	↓
CP#9 STAIR LTG.	11			0.6	100	1	20	12											12	↓
SPARE	13				100	2	30						20	1	100				14	SPARE
↓	15												20	1	100				16	SPARE
SPARE	17				100	1	20						20	1	100				18	SPARE
POWER DOOR LOCK HAIKU PORTAL	19			0.1	100	1	20	12					20	1	100				20	SPARE
	21																			
SUBTOTAL		5.9	5.9	1.84												5.0	5.0	5.0		

	A	B	C
	10.9	10.9	6.84
	10.9	10.9	6.84

TOTAL CONNECTED =28.64 kVA
ESTIMATED MAXIMUM DEMAND =28.64 kVA

5/29/97	DCN 75-019: IDENTIFIED CIRCUIT FOR HAIKU PORTAL POWER DOOR LOCK PANEL TLP6
DATE	REVISION

STATE OF HAWAII
DEPARTMENT OF TRANSPORTATION
HIGHWAYS DIVISION

PANEL SCHEDULES - 2

EXPLORATORY TUNNEL IMPROVEMENTS
H-3 FINISH (UNIT III)
FAIP NO. I-H3-1(75), UNIT III
T.K. TUNNEL/ACCESS ROADS

SCALE: NONE DATE: JUN 1995

KEENE M. MATSUDA
LICENSED PROFESSIONAL ENGINEER
NO. 8493-E
HAWAII, U.S.A.

THIS WORK WAS PREPARED BY ME OR UNDER MY SUPERVISION

Keene Matsuda

SHEET NO. 2E25 OF 30 SHEETS

ORIGINAL PLAN	SURVEY PLOTTED BY	DATE
	DRAWN BY R. J. HERNANDEZ	NOV 94
NOTE BOOK	TRACED BY	"
	DESIGNED BY T. SANCHEZ	NOV 94
NO.	QUANTITIES BY	"
	CHECKED BY K. MATSUDA	DEC 94

HERNANDEZ ELWOOD:::2410:IDWG.ELECT\E018.FGB71 12JUN95-13.36.40

C.O. 97

FED. ROAD DIST. NO.	STATE	FED. AID PROJ. NO.	FISCAL YEAR	SHEET NO.	TOTAL SHEETS
HAWAII	HAW.	I-H3-1(75) UNIT III	1994	98	353

SYSTEM: 120/240V, 100A, 1Ø, 3W PANEL - MPC1 PANEL LOCATION: EXPLORATORY TUNNEL
MAINS: 100A, 2P SUPPLY LOCATION: PNL "TLP1" EXPLORATORY TUNNEL VIA TRANSFORMER
SHORT CIRCUIT RATING: 10KAIC

SERVICE	CKT. NO.	LOAD kVA A	LOAD kVA B	LOAD kVA -	CIRCUIT BREAKER FRAME	POLES	TRIP	WIRE AWG				WIRE AWG	CIRCUIT BREAKER TRIP	POLES	FRAME	LOAD kVA A	LOAD kVA B	LOAD kVA -	CKT. NO.	SERVICE
RECEPTACLES	1	0.80			100	1	20	12				12	20	1	100	0.25			2	EF-101 CONTROL
LC1	3		0.25		100	1	20	12				12	20	1	100		0.60		4	ELEV. LTG.
SPARE	5				100	1	20					12	20	1	100	0.25			6	ELEV. EF-105
SPARE	7				100	1	20					12	20	1	100		0.12		8	SHAFT RECEPT
SPARE	9				100	1	20						20	1	100				10	SPARE
SPARE	11				100	1	20						20	1	100				12	SPARE
SUBTOTAL		0.8	0.3													0.5	0.72			

	A	B	
	1.3	1.02	
	1.3	1.02	

TOTAL CONNECTED = 2.32kVA
ESTIMATED MAXIMUM DEMAND = 2.32kVA

SYSTEM: 120/240V, 100A, 1Ø, 3W PANEL - MPC2 PANEL LOCATION: EXPLORATORY TUNNEL
MAINS: 100A, 2P SUPPLY LOCATION: PNL "TLP2", VIA TRANSFORMER EXPLORATORY TUNNEL
SHORT CIRCUIT RATING: 10KAIC

SERVICE	CKT. NO.	LOAD kVA A	LOAD kVA B	LOAD kVA C	CIRCUIT BREAKER FRAME	POLES	TRIP	WIRE AWG				WIRE AWG	CIRCUIT BREAKER TRIP	POLES	FRAME	LOAD kVA A	LOAD kVA B	LOAD kVA -	CKT. NO.	SERVICE
RECEPTACLES	1	0.80			100	1	20	12				12	20	1	100	0.30			2	ELEV. LTG.
LC2	3		0.25		100	1	20	12				12	20	1	100		0.12		4	SHAFT RECEPT
SPARE	5				100	1	20					12	20	1	100	0.25			6	ELEV. EF-106
SPARE	7				100	1	20						20	1	100				8	SPARE
SPARE	9				100	1	20						20	1	100				10	SPARE
SPARE	11				100	1	20						20	1	100				12	SPARE
SUBTOTAL		0.8	0.3													0.6	0.12			

	A	B	
	1.4	0.42	
	1.4	0.42	

TOTAL CONNECTED = 1.82kVA
ESTIMATED MAXIMUM DEMAND = 1.82kVA

SYSTEM: 120/240V, 100A, 1Ø, 3W PANEL - MPC3 PANEL LOCATION: EXPLORATORY TUNNEL
MAINS: 100A, 2P SUPPLY LOCATION: PNL "TLP3", VIA TRANSFORMER EXPLORATORY TUNNEL
SHORT CIRCUIT RATING: 10KAIC

SERVICE	CKT. NO.	LOAD kVA A	LOAD kVA B	LOAD kVA -	CIRCUIT BREAKER FRAME	POLES	TRIP	WIRE AWG				WIRE AWG	CIRCUIT BREAKER TRIP	POLES	FRAME	LOAD kVA A	LOAD kVA B	LOAD kVA -	CKT. NO.	SERVICE
RECEPTACLES	1	0.80			100	1	20	12				12	20	1	100	0.30			2	ELEV. LTG.
LC3	3		0.25		100	1	20	12				12	20	1	100		0.25		4	ELEV. EF-107
SPARE	5				100	1	20					12	20	1	100	0.12			6	SHAFT RECEPT.
SPARE	7				100	1	20						20	1	100				8	SPARE
SPARE	9				100	1	20						20	1	100				10	SPARE
SPARE	11				100	1	20						20	1	100				12	SPARE
SUBTOTAL		0.8	0.3													0.42	0.25			

	A	B	
	1.22	0.55	
	1.22	0.55	

TOTAL CONNECTED = 1.77kVA
ESTIMATED MAXIMUM DEMAND = 1.77kVA

SYSTEM: 120/240V, 100A, 1Ø, 3W PANEL - MPC4 PANEL LOCATION: EXPLORATORY TUNNEL
MAINS: 100A, 2P SUPPLY LOCATION: PNL "TLP4", VIA TRANSFORMER EXPLORATORY TUNNEL
SHORT CIRCUIT RATING: 10KAIC

SERVICE	CKT. NO.	LOAD kVA A	LOAD kVA B	LOAD kVA -	CIRCUIT BREAKER FRAME	POLES	TRIP	WIRE AWG				WIRE AWG	CIRCUIT BREAKER TRIP	POLES	FRAME	LOAD kVA A	LOAD kVA B	LOAD kVA -	CKT. NO.	SERVICE
RECPTACLES	1	0.80			100	1	20	12					20	1	100				2	SPARE
LC4	3		0.25		100	1	20	12					20	1	100				4	SPARE
SPARE	5				100	1	20						20	1	100				6	SPARE
SPARE	7				100	1	20						20	1	100				8	SPARE
SPARE	9				100	1	20						20	1	100				10	SPARE
SPARE	11				100	1	20						20	1	100				12	SPARE
SUBTOTAL		0.8	0.3																	

	A	B	
	0.8	0.3	
	0.8	0.3	

TOTAL CONNECTED = 1.1kVA
ESTIMATED MAXIMUM DEMAND = 1.1kVA

KEENE M. MATSUDA
LICENSED PROFESSIONAL ENGINEER
NO. 8493-E
HAWAII, U.S.A.

THIS WORK WAS PREPARED BY ME OR UNDER MY SUPERVISION

Keene Matsuda

DATE	REVISION

STATE OF HAWAII
DEPARTMENT OF TRANSPORTATION
HIGHWAYS DIVISION

PANEL SCHEDULES - 3

EXPLORATORY TUNNEL IMPROVEMENTS
H-3 FINISH (UNIT III)
FAIP NO. I-H3-1(75), UNIT III
T.K. TUNNEL/ACCESS ROADS

SCALE: NONE DATE: JUN 1995

SHEET NO. 2E26 OF 30 SHEETS

ORIGINAL PLAN
NOTE BOOK NO.
SURVEY PLOTTED BY
DRAWN BY R. J. HERNANDEZ DATE NOV 94
TRACED BY " " NOV 94
DESIGNED BY T. SANCHEZ " " NOV 94
QUANTITIES BY " " DEC 94
CHECKED BY K. MATSUDA

HERNANDEZ ELWOOD:::2410:IDWG.ELECTJE021.FGB71 12JUN95-13.40.10

FED. ROAD DIST. NO.	STATE	FED. AID PROJ. NO.	FISCAL YEAR	SHEET NO.	TOTAL SHEETS
HAWAII	HAW.	I-H3-1(75) UNIT III	1994	99	353

SYSTEM: 120/240V, 100A, 1Ø, 3W PANEL - MPC5 PANEL LOCATION: EXPLORATORY TUNNEL
MAINS: 100A, 2P SUPPLY LOCATION: PNL "TLP5", VIA TRANSFORMER EXPLORATORY TUNNEL
SHORT CIRCUIT RATING: 10 KAIC

SERVICE	CKT. NO.	LOAD kVA A	LOAD kVA B	LOAD kVA -	CIRCUIT BREAKER FRAME	CIRCUIT BREAKER POLES	CIRCUIT BREAKER TRIP	WIRE AWG				WIRE AWG	CIRCUIT BREAKER TRIP	CIRCUIT BREAKER POLES	CIRCUIT BREAKER FRAME	LOAD kVA A	LOAD kVA B	LOAD kVA -	CKT. NO.	SERVICE
RECPTACLES	1	1.0			100	1	20	12				12	20	1	100	0.60			2	ELEV. LTG
LC5	3		0.25		100	1	20	12				12	20	1	100		0.20		4	IV-ET2,FS-ET2
ELEV. LTG.	5	0.60			100	1	20	12				12	20	1	100	0.25			6	EF-108
SPARE	7				100	1	20					12	20	1	100		0.12		8	SHAFT RECEPT
SPARE	9				100	1	20						20	1	100				10	SPARE
SPARE	11				100	1	20						20	1	100				11	SPARE
SUBTOTAL		1.6	0.3													0.9	0.32			

	A	B	
	2.5	0.62	
	2.5	0.62	

TOTAL CONNECTED = 3.12kVA
ESTIMATED MAXIMUM DEMAND = 3.12kVA

SYSTEM: 120/240V, 1Ø, 3W PANEL - MPC6 PANEL LOCATION: EXPLORATORY TUNNEL
MAINS: 40A, 2P SUPPLY LOCATION: PNL "TLP6", VIA TRANSFORMER EXPLORATORY TUNNEL
SHORT CIRCUIT RATING: 10 KAIC

SERVICE	CKT. NO.	LOAD kVA A	LOAD kVA B	LOAD kVA -	CIRCUIT BREAKER FRAME	CIRCUIT BREAKER POLES	CIRCUIT BREAKER TRIP	WIRE AWG				WIRE AWG	CIRCUIT BREAKER TRIP	CIRCUIT BREAKER POLES	CIRCUIT BREAKER FRAME	LOAD kVA A	LOAD kVA B	LOAD kVA -	CKT. NO.	SERVICE
RECEPTACLES	1	1.20			100	1	20	12				12	20	1	100	0.25			2	EF-102 CONTROL
LC6	3		0.25		100	1	20	12				12	20	1	100		0.30		4	ELEV. LTG
ELEV. LTG.	5	0.60			100	1	20	12				12	20	1	100	0.25			6	EF-109
SPARE	7				100	1	20					12	20	1	100		0.12		8	SHAFT RECEPT
SPARE	9				100	1	20						20	1	100				10	SPARE
SPARE	11				100	1	20						20	1	100				11	SPARE
SUBTOTAL		1.8	0.3													0.5	0.42			

	A	B	
	2.3	0.72	
	2.3	0.72	

TOTAL CONNECTED =3.02 kVA
ESTIMATED MAXIMUM DEMAND = 3.02kVA

ORIGINAL PLAN	SURVEY PLOTTED BY	DATE
	DRAWN BY R. J. HERNANDEZ	NOV 94
NOTE BOOK	TRACED BY	"
	DESIGNED BY T. SANCHEZ	NOV 94
NO.	QUANTITIES BY	"
	CHECKED BY K. MATSUDA	DEC 94

KEENE M. MATSUDA
LICENSED PROFESSIONAL ENGINEER
NO. 8493-E
HAWAII, U.S.A.

THIS WORK WAS PREPARED BY ME OR UNDER MY SUPERVISION

Keene Matsuda

DATE	REVISION
10/27/95	ADDENDUM 2-ADDED FS-ET2 TO MPC5

STATE OF HAWAII
DEPARTMENT OF TRANSPORTATION
HIGHWAYS DIVISION

PANEL SCHEDULES - 4

EXPLORATORY TUNNEL IMPROVEMENTS
H-3 FINISH (UNIT III)
FAIP NO. I-H3-1(75), UNIT III
T.K. TUNNEL/ACCESS ROADS

SCALE: NONE DATE: JUN 1995

SHEET NO. 2E27 OF 30 SHEETS

HERNANDEZ ELWOOD:::2410:[DWG.ELECT]E022.FGB;1 12JUN95-13.51.50

FED. ROAD DIST. NO.	STATE	FED. AID PROJ. NO.	FISCAL YEAR	SHEET NO.	TOTAL SHEETS
HAWAII	HAW.	I-H3-1(75) UNIT III	1994	100	353

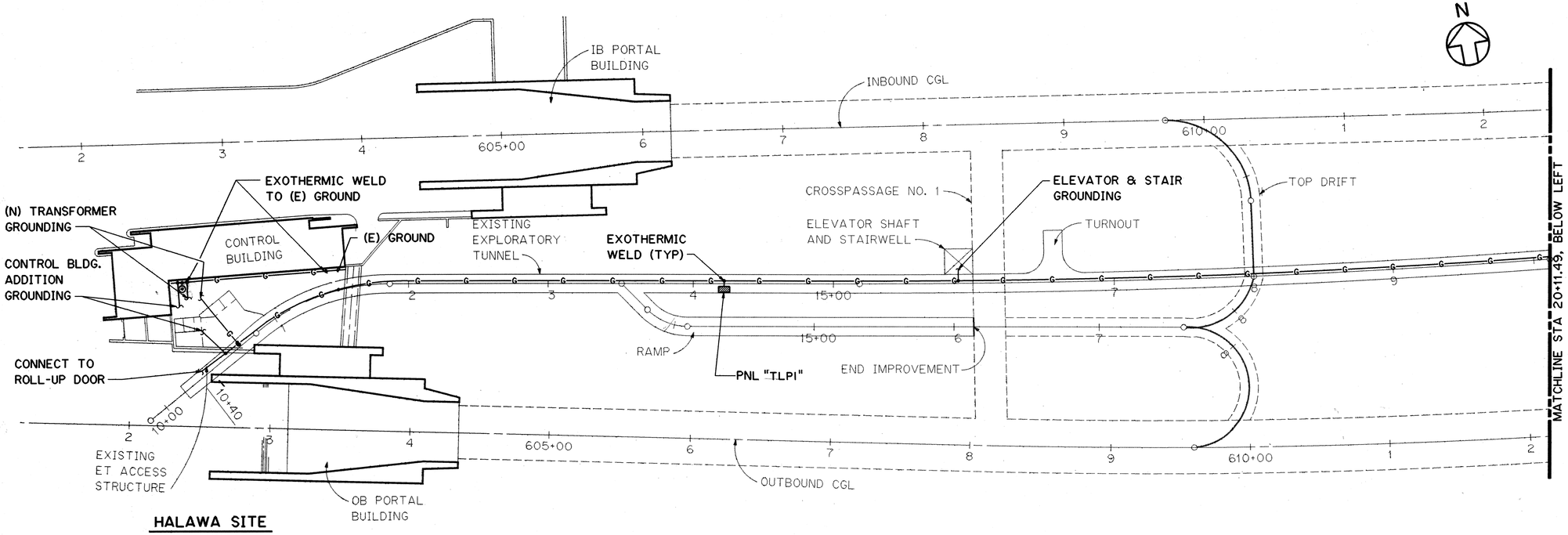

HALAWA SITE

NOTES:

1. FOR TUNNEL GROUND CONDUCTOR LOCATION, REFER TO SHEET NO. 2E21.

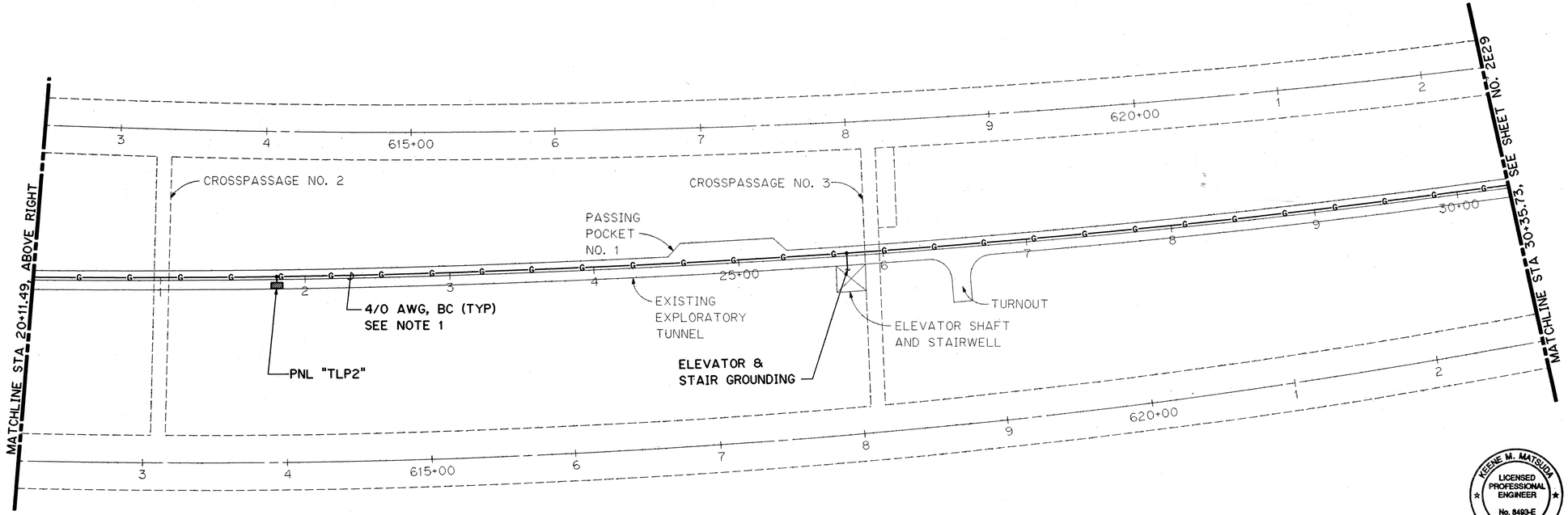

PARTIAL PLAN - EXPLORATORY TUNNEL

GRAPHIC SCALE
40' 0' 40' 80'
1" = 40'

KEENE M. MATSUDA
LICENSED PROFESSIONAL ENGINEER
No. 8493-E
HAWAII, U.S.A.

THIS WORK WAS PREPARED BY ME OR UNDER MY SUPERVISION

DATE	REVISION
10/13/95	ADDENDUM I

STATE OF HAWAII
DEPARTMENT OF TRANSPORTATION
HIGHWAYS DIVISION

GROUNDING PLAN-1

EXPLORATORY TUNNEL IMPROVEMENTS
H-3 FINISH (UNIT III)
FAIP NO. I-H3-1(75), UNIT III
T.K. TUNNEL/ACCESS ROADS

SCALE: 1" = 40' DATE: JUN 1995

SHEET NO. 2E28 OF 30 SHEETS

		DATE
SURVEY PLOTTED BY	R. J. HERNANDEZ	NOV 94
DRAWN BY		
TRACED BY		
DESIGNED BY	T. SANCHEZ	NOV 94
QUANTITIES BY		
CHECKED BY	K. MATSUDA	DEC 94

ORIGINAL PLAN
NOTE BOOK
NO.

HERNANDEZ ELWOOD::2410:DWG.ELECTJE026.FGB71 26JAN95-11.30.20

ADD. 100

FED. ROAD DIST. NO.	STATE	FED. AID PROJ. NO.	FISCAL YEAR	SHEET NO.	TOTAL SHEETS
HAWAII	HAW.	I-H3-1(75) UNIT III	1994	101	353

N

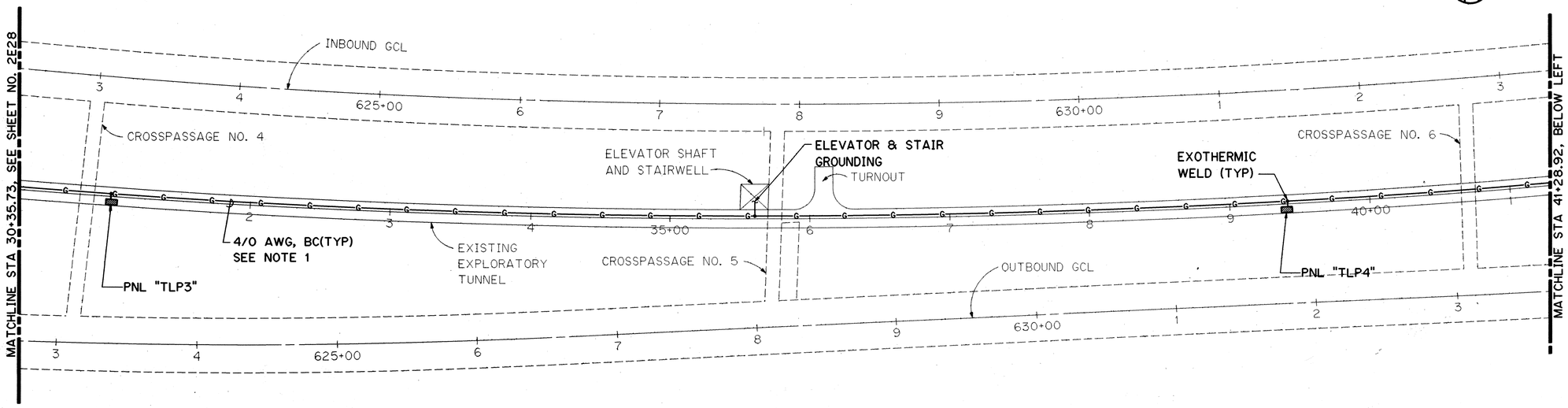

NOTES:

1. FOR TUNNEL GROUND CONDUCTOR LOCATION, REFER TO SHEET NO. 2E21.

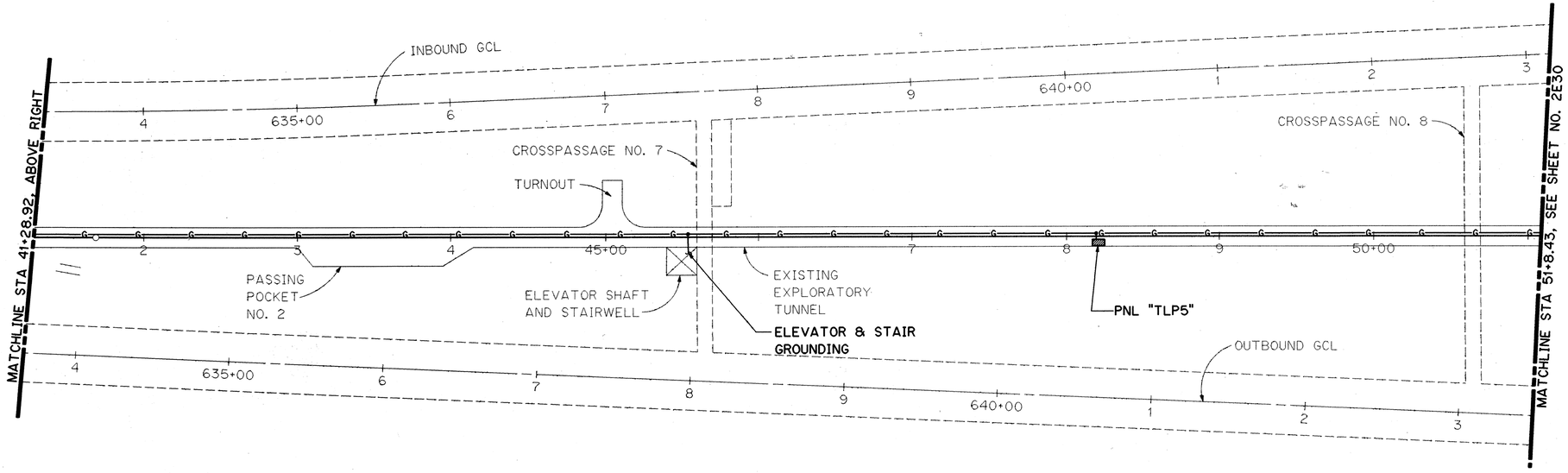

PARTIAL PLAN - EXPLORATORY TUNNEL

GRAPHIC SCALE
40' 0' 40' 80'
1" = 40'

KEENE M. MATSUDA
LICENSED PROFESSIONAL ENGINEER
No. 8493-E
HAWAII, U.S.A.

THIS WORK WAS PREPARED BY ME OR UNDER MY SUPERVISION

Keene Matsuda

DATE	REVISION

STATE OF HAWAII
DEPARTMENT OF TRANSPORTATION
HIGHWAYS DIVISION

GROUNDING PLAN-2

EXPLORATORY TUNNEL IMPROVEMENTS
H-3 FINISH (UNIT III)
FAIP NO. I-H3-1(75), UNIT III
T.K. TUNNEL/ACCESS ROADS

SCALE: 1" = 40' DATE: JUN 1995

SHEET NO. 2E29 OF 30 SHEETS

		DATE
SURVEY PLOTTED BY		
DRAWN BY	R. J. HERNANDEZ	NOV 94
TRACED BY		
DESIGNED BY	T. SANCHEZ	NOV 94
QUANTITIES BY		
CHECKED BY	K. MATSUDA	DEC 94

ORIGINAL PLAN
NOTE BOOK NO.

HERNANDEZ ELWOOD::2410:[DWG.ELECT]E027.FGB71 26JAN95-13:07:00

FED. ROAD DIST. NO.	STATE	FED. AID PROJ. NO.	FISCAL YEAR	SHEET NO.	TOTAL SHEETS
HAWAII	HAW.	I-H3-1(75) UNIT III	1994	102	353

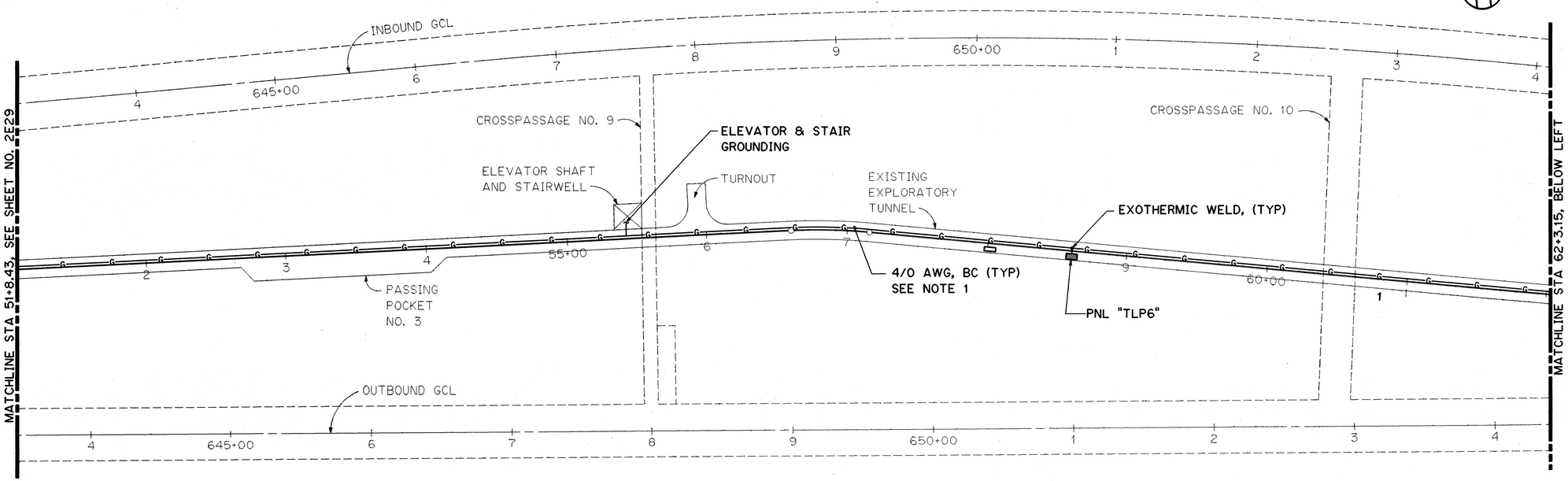

NOTES:

1. FOR TUNNEL GROUND CONDUCTOR LOCATION, REFER TO SHEET NO. 2E21.

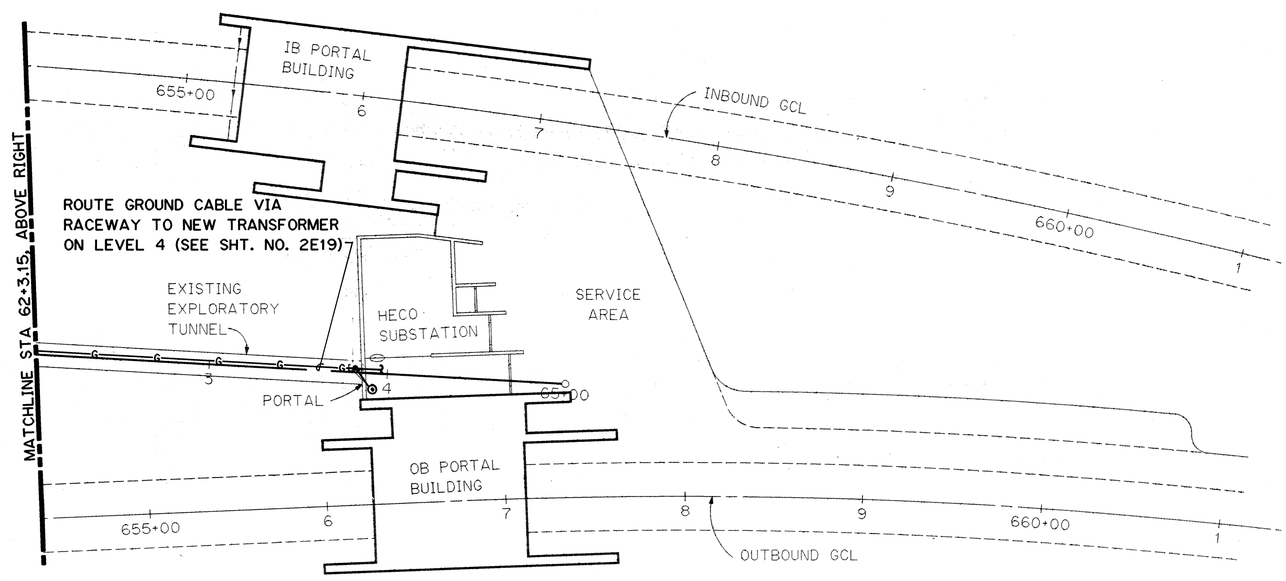

HAIKU SITE

PARTIAL PLAN - EXPLORATORY TUNNEL

GRAPHIC SCALE
40' 0' 40' 80'
1" = 40'

THIS WORK WAS PREPARED BY ME OR UNDER MY SUPERVISION

KEENE M. MATSUDA
LICENSED PROFESSIONAL ENGINEER
NO. 8493-E
HAWAII, U.S.A.

DATE	REVISION
10/13/95	ADDENDUM I

STATE OF HAWAII
DEPARTMENT OF TRANSPORTATION
HIGHWAYS DIVISION

GROUNDING PLAN-3

EXPLORATORY TUNNEL IMPROVEMENTS
H-3 FINISH (UNIT III)
FAIP NO. I-H3-1(75), UNIT III
T.K. TUNNEL/ACCESS ROADS

SCALE: 1" = 40' DATE: JUN 1995

SHEET NO. 2E30 OF 30 SHEETS

ORIGINAL PLAN

		DATE
SURVEY PLOTTED BY	R. J. HERNANDEZ	NOV 94
DRAWN BY	"	"
TRACED BY	T. SANCHEZ	NOV 94
DESIGNED BY	"	"
QUANTITIES BY	"	DEC 94
CHECKED BY	K. MATSUDA	

NOTE BOOK
NO.

HERNANDEZ ELWOOD:::2410:IDWG.ELECTJE028.FGB71 12JUN95-13.27.30

ADD. 102

FED. ROAD DIST. NO.	STATE	FED. AID PROJ. NO.	FISCAL YEAR	SHEET NO.	TOTAL SHEETS
HAWAII	HAW.	I-H3-1(75) UNIT III	1994	103	353

XREF LIST:
ETI-BRDR

CONDUIT AND CABLE SCHEDULE

RUN NO.	CONDUIT	CONTENTS
1	0.50	1 – PULL STATION CABLE
2	0.75	1 – INTERCOM CABLE
3	0.50	1 – CO MONITOR CABLE
4	1.00	1 – CCTV VIDEO AND POWER CABLE
5	0.50	1 – SMOKE DETECTOR CABLE
6	1.00	1 – SMOKE DETECTOR CABLE, 1 – PULL STATION CABLE 1 – AUDIBLE/VISUAL ALARM CABLE
7	1.50	1 – CCTV VIDEO AND POWER CABLE, 1-CO MONITOR CABLE, 1 - INTERCOM CABLE
8 **	3.00	2-CCTV VIDEO AND POWER CABLES, 1-CO MONITOR CABLE, 1-INTERCOM CABLE, 1-15PR ELEVATOR CABLE, 1-TELEPHONE CABLE, 2-1PR FAN CABLE
9	0.75	2 – SMOKE DETECTOR CABLES
10	1.00	2 – CCTV VIDEO AND POWER CABLES
11	0.75	1 – CCTV VIDEO AND POWER CABLE
12	1.00	2 – SMOKE DETECTOR CABLES, 1 – PULL STATION CABLE 1 – AUDIBLE/VISUAL ALARM CABLE
13	1.50	1 – 15 PR ELEVATOR CABLE, 1-TELEPHONE CABLE
14	0.50	1 – INTRUSION DETECTOR CABLE
15 **	3.00	2 – CCTV VIDEO AND POWER CABLES, 1 – CO MONITOR CABLE, 1 – INTERCOM CABLE, 1 – INTRUSION DETECTOR CABLE, 1 – 15 PR ELEVATOR CABLE, 1 TELEPHONE CABLE, 2-1 PR FAN CABLE
16	1.50	1 – CCTV VIDEO AND POWER CABLE, 2 – INTRUSION DETECTOR CABLES, 1-CARD KEY ACCESS & POWER CABLE, 1-INTERCOM CABLE, 1-DOOR STRIKE CABLE
17	1.50	1 – INTERCOM CABLE, 2 – INTRUSION DETECTOR CABLES, 1-CARD KEY ACCESS AND POWER CABLE, 1-DOOR STRIKE CABLE
19	0.50	2 – SMOKE DETECTOR CABLE
20	NONE	2 – RADIO ANTENNA CABLES (ONE PAIR EACH SIDE OF TUNNEL)
21		NOT USED
22	1.00	1 – CARD KEY ACCESS AND POWER CABLE
23	1.25	1 – CARD KEY ACCESS AND POWER CABLE, 1 – INTERCOM CABLE 1 – INTRUSION DETECTION
24	1.00	1 – CARD KEY ACCESS CABLE, 1 – INTERCOM CABLE
25	0.50	1 – INTRUSION DETECTION (MOTOR LIMIT SWITCH)
26	0.75	1 – PULL STATION CABLE, 1 – AUDIBLE/VISUAL ALARM CABLE
27	2.00	1 – 4 PR FAN CABLE, 1-PR ISOLATION VALVE, 1-PR FLOW SWITCH
28	0.75	2 – 1PR FAN CABLE
29	2.00	1-15PR ELEVATOR CABLE, 1-TELEPHONE CABLE, 2-1PR FAN CABLE
30	1.50	1-4PR FAN CABLE, 1PR ISOLATION VALVE, 1PR FLOW SWITCH, 1-CCTV VIDEO AND POWER CABLE, 1-INTERCOM CABLE
32	2.00	2-INTRUSION DETECTION CABLE, 1-CARD KEY ACCESS AND POWER CABLE, 1-DOOR STRIKE CABLE

** FOR CROSSPASSAGE NO. 1, ADD 1-CCTV VIDEO AND POWER CABLE (TOTAL OF 3)

CABLE SIZE ASSUMPTIONS FOR CONDUIT SIZING CALCULATIONS

CABLE TYPE	CABLE SIZE
INTRUSION DETECTOR CABLE, DOOR STRIKE CABLE	2/C #18
CARBON MONOXIDE MONITOR CABLE	2/C #18 SHIELDED
SMOKE DETECTOR CABLE	2/C #18
CARD READER CABLE	2/C #18 SHIELDED
CARD READER POWER CABLE	2 #18
INTERCOM CABLE	2 #22 TWISTED PAIR, SHIELDED
PULL STATION CABLE	2/C #16
AUDIBLE/VISUAL ALARM CABLE	2/C #16
RADIO COAXIAL CABLE	RG59
CCTV CONTROL CABLE	3/C #18 SHIELDED (2 CABLES)
CCTV VIDEO CABLE	RG59 TRIAX
CCTV POWER CABLE	#12 (3 CABLES)

GENERAL NOTES:

1. CONTRACTOR SHALL PROVIDE 1-10PR AND 1-5PR CABLE TO MEET THE 15PR ELEVATOR CABLE REQUIREMENT.

CONSTRUCTION NOTES

1. INSTALL ANTENNAE SUPPORT BRACKET EVERY 10' THROUGHOUT THE LENGTH OF THE TUNNEL. SEE SHEET NO. 2T21 FOR SUPPORT DETAIL.
2. INSTALL PTZ POSITION CLOSED CIRCUIT TELEVISION (CCTV) CAMERA AS SHOWN ON SHEET NO. 2T16, DETAIL NO. 1.
3. INSTALL FIXED POSITION CLOSED CIRCUIT TELEVISION (CCTV) CAMERA AS SHOWN ON SHEET NO. 2T16, DETAIL NO. 2.
4. INSTALL THE FIRE ALARM PULL STATION AND AUDIBLE/VISUAL ALARM PER DETAIL NO. 1 SHOWN ON SHEET NO. 2T18.
5. INSTALL CO MONITOR PER DETAIL NO. 1 SHOWN ON SHEET NO. 2T17.
6. INSTALL INTERCOM PER DETAIL NO. 2 SHOWN ON SHEET NO. 2T17.
7. INSTALL SMOKE DETECTOR PER DETAIL NO. 2 SHOWN ON SHEET NO. 2T18.
8. INSTALL INTRUSION DETECTOR PER DETAIL NO. 2 SHOWN ON SHEET NO. 2T19.
9. SURFACE MOUNT CONDUIT ONTO TUNNEL WALL WITH APPROVED FASTENING DEVICES. MAXIMUM SPACING PER NEC.
10. INSTALL CONDULET AT THE "T" INTERSECTION WHERE THE CONDUITS MEET.
11. SURFACE MOUNT CONDUIT TO SIDE OF BRIDGE PIER WITH APPROVED FASTENING DEVICES. MAXIMUM SPACING PER NEC.
12. RUN CONDUIT INTO THE EXISTING JUNCTION BOX.
13. INSTALL CONDUIT IN REVEAL PER DETAIL NO. 2 SHOWN ON SHEET NO. 2T20.
14. TERMINATE WIRING ON LIMIT SWITCH CONTACT.
15. INSTALL END OF THE LINE RESISTOR AT THIS DEVICE.
16. COIL AND TIE OFF 75' OF EACH CABLE ENTERING EQUIPMENT ROOM. SEE SPECIAL PROVISIONS FOR TESTING REQUIREMENTS. CONTRACTOR SHALL TAG EACH PAIR WITH THE APPROPRIATE CONTACT NUMBER.
17. COIL AND TIE OFF 30' OF EACH CABLE ENTERING EQUIPMENT ROOM. CONTRACTOR SHALL TAG EACH PAIR WITH APPROPRIATE CONTACT NUMBER.
18. CORE DRILL AND GROUT PER SPECIAL PROVISIONS.
19. LOCATION TO BE DETERMINED IN THE FIELD.
20. INSTALL INTRUSION DETECTOR ON CROSSPASSAGE DOOR PER DETAIL ON SHT. NO. 7T4L. DETAIL APPLIES TO ALL CROSS PASSAGE DOORS. (TOTAL OF 20 INSTALLATION LOCATIONS).
21. INSTALL NEW 3/4" CONDUIT. PENETRATE EXISTING JB IN CEILING. INSTALL 3/4" TO 2" CONDULET TO MATCH EXISTING 2" CONDUIT AT FLOOR. INSTALLATION IS REQUIRED AT CROSSPASSAGE NOS. 2, 3, 4, 6, 7, 8 AND 10.

NOTE: ALL CONDUIT AND CABLES INDICATED ON CONDUIT AND CABLE SCHEDULE SHALL BE PROVIDED AND INSTALLED AS PART OF THIS CONTRACT.

FOR DETAIL AS-BUILT INFORMATION
REFER TO CONSTRUCTION SUBMITTALS

ORIGINAL PLAN	SURVEY PLOTTED BY	DATE 10/94
	DRAWN BY G. L. FROMM	" "
	TRACED BY	" "
NOTE BOOK	DESIGNED BY G. J. FROMM	10/94
	QUANTITIES BY	" "
No.	CHECKED BY	" "

STANLEY M.O.T. CHUNG
LICENSED PROFESSIONAL ENGINEER
No. 8312-C
HAWAII, U.S.A.

THIS WORK WAS PREPARED BY ME OR UNDER MY SUPERVISION

Stanley M.O.T. Chung

DATE	REVISION
1/14/97	DCN75-010: REVISED PER RESPONSE TO RFI # 4097-136
10/27/95	ADDENDUM 2 - REVISED CONST. NOTES 17 AND 20, ADDED CONST. NOTE 21, REVISED CONDUIT RUN 7,8,13,14,16,17 AND 18, ADDED CONDUIT RUN 30,31 AND 32
10/13/95	ADDENDUM 1

STATE OF HAWAII
DEPARTMENT OF TRANSPORTATION
HIGHWAYS DIVISION

CONDUIT/CABLE SCHEDULE & NOTES – SYSTEMS

EXPLORATORY TUNNEL IMPROVEMENTS
H-3 FINISH (UNIT III)
FAIP NO. I-H3-1(75), UNIT III
T.K. TUNNEL/ACCESS ROADS

SCALE: NONE DATE: JUN 1995

SHEET NO. 2T1 OF 21 SHEETS

P:\H3\CONT.75\UNIT-III\EXP-TUN\H3-2T02.DWG

FED. ROAD DIST. NO.	STATE	FED. AID PROJ. NO.	FISCAL YEAR	SHEET NO.	TOTAL SHEETS
HAWAII	HAW.	I-H3-1(75) UNIT III	1994	104	353

XREF LIST:
ETI-BRDR

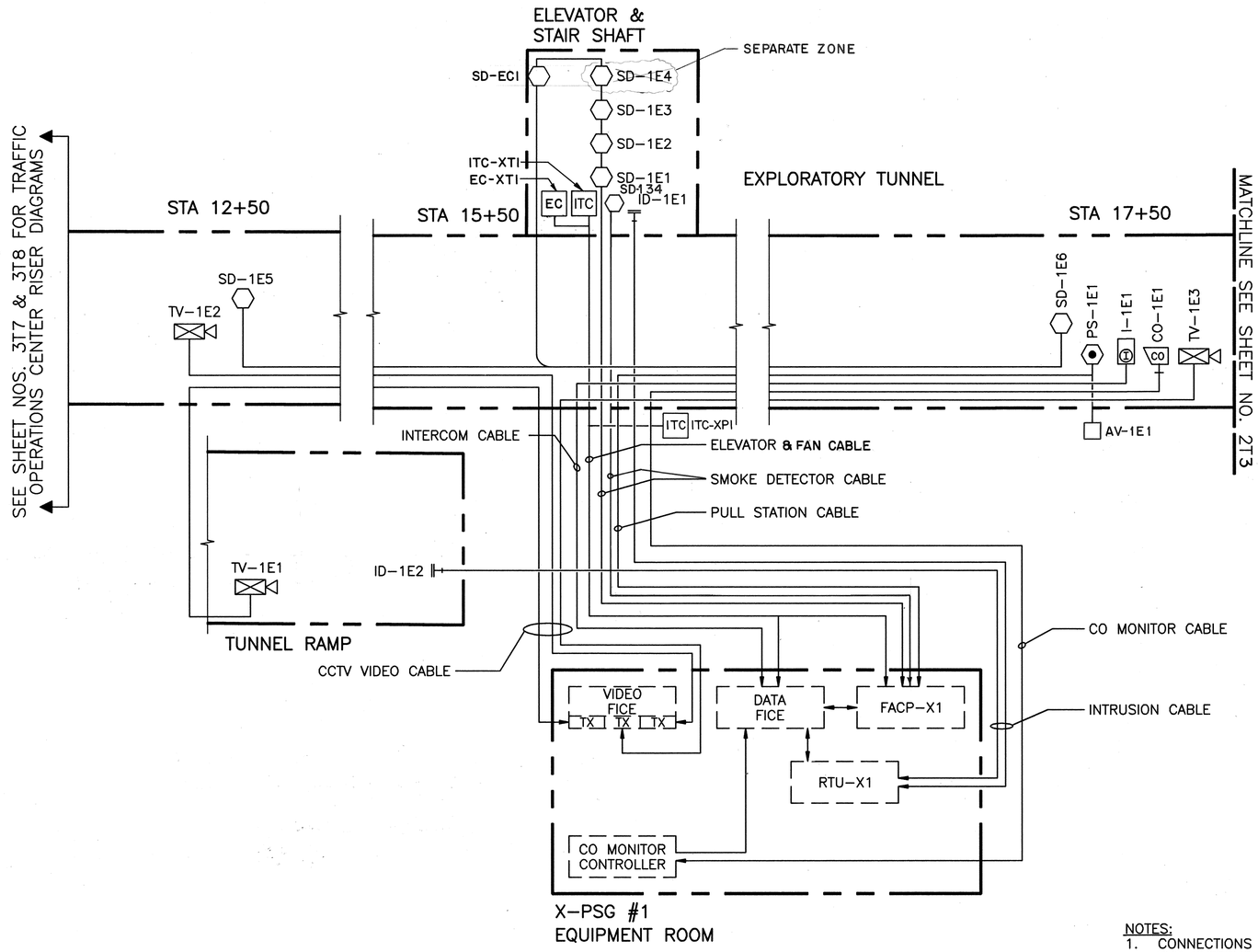

NOTES:
1. CONNECTIONS SHOWN TO THE DEVICES IN THE SYSTEMS EQRM ARE FOR INFORMATION ONLY. CONTRACTOR IS NOT RESPONSIBLE FOR MAKING THESE FINAL CONNECTIONS PER PLANS & SPECIAL PROVISIONS.

DATE	REVISION
10/27/95	ADDENDUM 2 - ADDED LABEL FOR ITC-XP1
10/13/95	ADDENDUM 1

STANLEY M.O.T. CHING
LICENSED PROFESSIONAL ENGINEER
No. 6312-C
HAWAII, U.S.A.

THIS WORK WAS PREPARED BY ME OR UNDER MY SUPERVISION

Stanley M.O.T. Ching

STATE OF HAWAII
DEPARTMENT OF TRANSPORTATION
HIGHWAYS DIVISION

BLOCK DIAGRAM – 1
SYSTEMS

EXPLORATORY TUNNEL IMPROVEMENTS
H-3 FINISH (UNIT III)
FAIP NO. I-H3-1(75), UNIT III
T.K. TUNNEL/ACCESS ROADS

SCALE: NONE DATE: JUN 1995

SHEET NO. 2T2 OF 21 SHEETS

ORIGINAL PLAN
SURVEY PLOTTED BY
DRAWN BY P. HITT DATE 10/94
TRACED BY
DESIGNED BY L. NELSON/D. ANDERSON 10/94
QUANTITIES BY
CHECKED BY
NOTE BOOK
No.

P:\H3\CONT.75\UNIT-III\EXP-TUN\H3-2T03.DWG

ADD. 104

FED. ROAD DIST. NO.	STATE	FED. AID PROJ. NO.	FISCAL YEAR	SHEET NO.	TOTAL SHEETS
HAWAII	HAW.	I-H3-1(75) UNIT III	1994	105	353

XREF LIST:
ETI-BRDR

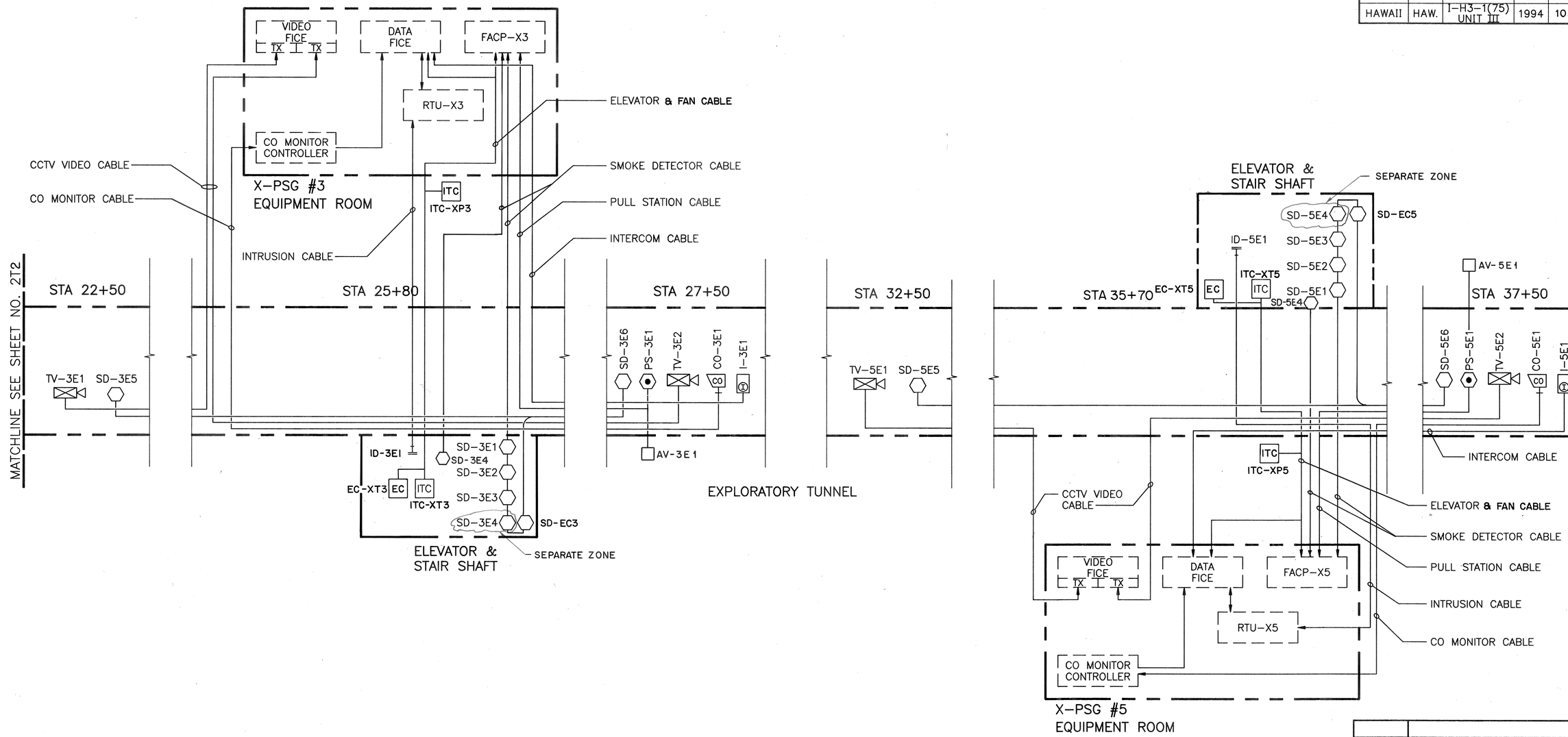

NOTES:
1. CONNECTIONS SHOWN TO THE DEVICES IN THE SYSTEMS EQRM ARE FOR INFORMATION ONLY. CONTRACTOR IS NOT RESPONSIBLE FOR MAKING THESE FINAL CONNECTIONS PER PLANS & SPECIAL PROVISIONS.

DATE	REVISION
10/27/95	ADDENDUM 2-CORRECTED LABEL FOR SD-EC5
10/13/95	ADDENDUM.1

STANLEY M.O.T. CHUNG
LICENSED PROFESSIONAL ENGINEER
No. 6312-C
HAWAII, U.S.A.

THIS WORK WAS PREPARED BY ME OR UNDER MY SUPERVISION

Stanley M.O.T. Chung

STATE OF HAWAII
DEPARTMENT OF TRANSPORTATION
HIGHWAYS DIVISION

BLOCK DIAGRAM – 2
SYSTEMS

EXPLORATORY TUNNEL IMPROVEMENTS
H-3 FINISH (UNIT III)
FAIP NO. I-H3-1(75), UNIT III
T.K. TUNNEL/ACCESS ROADS

SCALE: NONE DATE: JUN 1995

SHEET NO. 2T3 OF 21 SHEETS

ORIGINAL PLAN		
SURVEY PLOTTED BY	P. R. E. HITT	DATE 10/94
DRAWN BY	"	"
TRACED BY	"	"
NOTE BOOK DESIGNED BY	L. Y. NELSON	10/94
QUANTITIES BY		
CHECKED BY		
No.		

P:\H3\CONT.75\UNIT-III\EXP-TUN\H3-2T04.DWG

ADD.105

FED. ROAD DIST. NO.	STATE	FED. AID PROJ. NO.	FISCAL YEAR	SHEET NO.	TOTAL SHEETS
HAWAII	HAW.	I-H3-1(75) UNIT III	1994	106	353

XREF LIST:
ETI-BROR

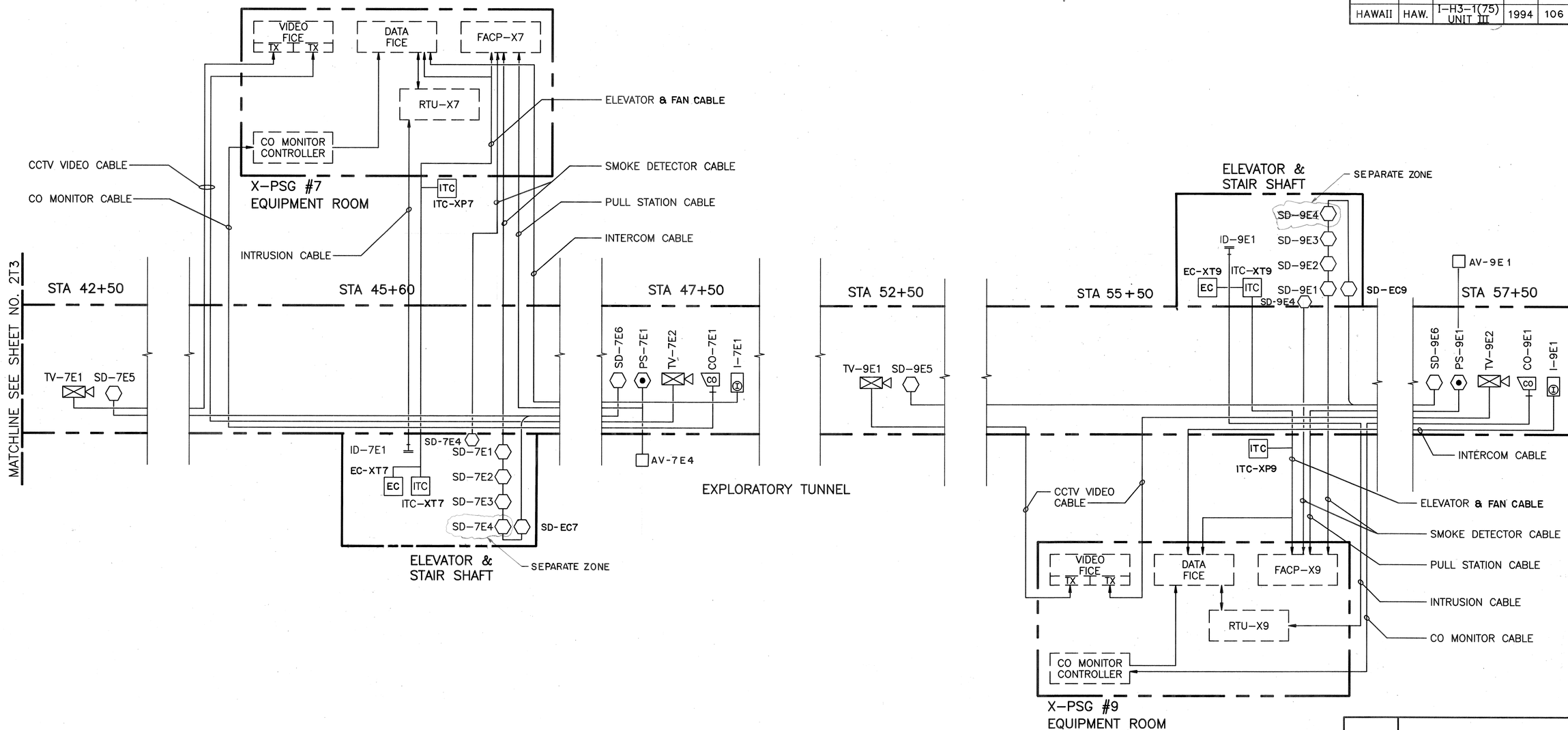

NOTES:
1. CONNECTIONS SHOWN TO THE DEVICES IN THE SYSTEMS EQRM ARE FOR INFORMATION ONLY. CONTRACTOR IS NOT RESPONSIBLE FOR MAKING THESE FINAL CONNECTIONS PER PLANS & SPECIAL PROVISIONS.

STANLEY M.O.T. CHANG
LICENSED PROFESSIONAL ENGINEER
No. 6312-C
HAWAII, U.S.A.

THIS WORK WAS PREPARED BY ME OR UNDER MY SUPERVISION

Stanley M.O.T. Chang

DATE	REVISION
10/13/95	ADDENDUM 1

STATE OF HAWAII
DEPARTMENT OF TRANSPORTATION
HIGHWAYS DIVISION

BLOCK DIAGRAM – 3
SYSTEMS

EXPLORATORY TUNNEL IMPROVEMENTS
H-3 FINISH (UNIT III)
FAIP NO. I-H3-1(75), UNIT III
T.K. TUNNEL/ACCESS ROADS

SCALE: NONE DATE: JUN 1995

SHEET NO. 2T4 OF 21 SHEETS

ORIGINAL PLAN
NOTE BOOK No.
SURVEY PLOTTED BY
DRAWN BY P. R. E. HITT DATE 10/94
TRACED BY
DESIGNED BY L. Y. NELSON 10/94
QUANTITIES BY
CHECKED BY

P:\H3\CONT.75\UNIT-III\EXP-TUN\H3-2T05.DWG

ADD. 106

FED. ROAD DIST. NO.	STATE	FED. AID PROJ. NO.	FISCAL YEAR	SHEET NO.	TOTAL SHEETS
HAWAII	HAW.	I-H3-1(75) UNIT III	1994	107	353

XREF LIST:
ETI-BRDR

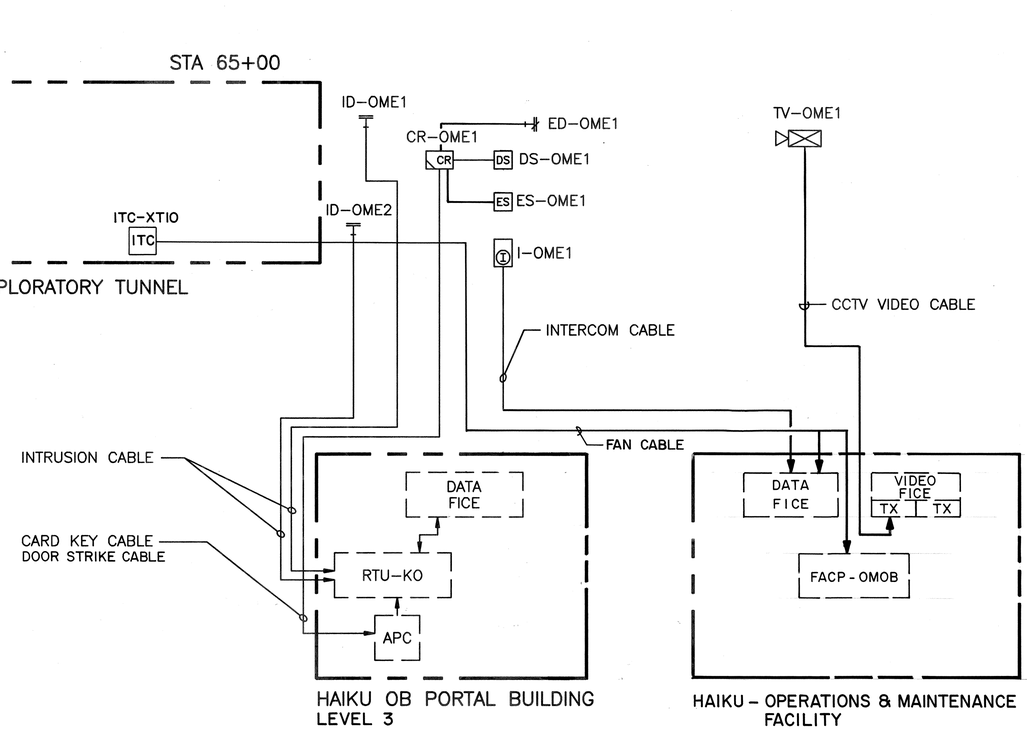

NOTES:
1. CONNECTIONS SHOWN TO THE DEVICES IN THE SYSTEMS EQRM ARE FOR INFORMATION ONLY. CONTRACTOR IS NOT RESPONSIBLE FOR MAKING THESE FINAL CONNECTIONS PER PLANS & SPECIAL PROVISIONS.

10/27/95	ADDENDUM 2 - REVISED TO INDICATE O & M FACILITY
10/13/95	ADDENDUM 1
DATE	REVISION

STATE OF HAWAII
DEPARTMENT OF TRANSPORTATION
HIGHWAYS DIVISION

BLOCK DIAGRAM – 4 SYSTEMS

EXPLORATORY TUNNEL IMPROVEMENTS
H-3 FINISH (UNIT III)
FAIP NO. I-H3-1(75), UNIT III
T.K. TUNNEL/ACCESS ROADS

SCALE: NONE DATE: JUN 1995

STANLEY M.O.T. CHING
LICENSED PROFESSIONAL ENGINEER
No. 6312-C
HAWAII, U.S.A.

THIS WORK WAS PREPARED BY ME OR UNDER MY SUPERVISION

Stanley M.O.T. Ching

SHEET NO. 2T5 OF 21 SHEETS

ORIGINAL PLAN
NOTE BOOK No.
SURVEY PLOTTED BY P. HITT DATE 10/94
DRAWN BY " "
TRACED BY " "
DESIGNED BY L. NELSON/D. ANDERSON " 10/94
QUANTITIES BY " "
CHECKED BY " "

P:\H3\CONT.75\UNIT-III\EXP-TUN\H3-2T06.DWG

ADD. 107

FED. ROAD DIST. NO.	STATE	FED. AID PROJ. NO.	FISCAL YEAR	SHEET NO.	TOTAL SHEETS
HAWAII	HAW.	I-H3-1(75) UNIT III	1994	108	353

SEE TRANSDYN DWG 3001-900-9009 AND CANAM DWG 1A.

XREF LIST:
ETI-BRDR

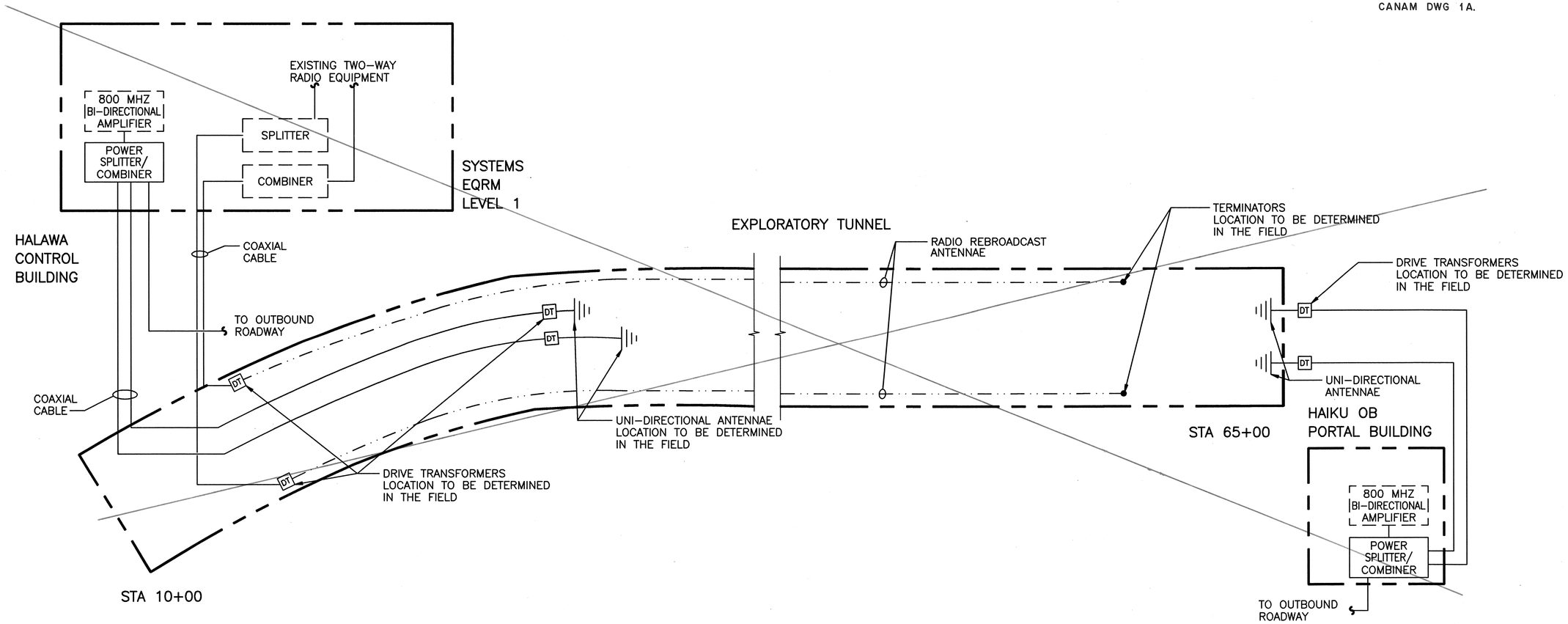

ORIGINAL PLAN		
NOTE BOOK	SURVEY PLOTTED BY P. R. E. HITT	DATE 10/94
	DRAWN BY P. L. FORDYCE	10/94
	TRACED BY	
	DESIGNED BY	
	QUANTITIES BY	
No.	CHECKED BY	

STANLEY M.O.T. CHUNG
LICENSED PROFESSIONAL ENGINEER
No. 6312-C
HAWAII, U.S.A.

THIS WORK WAS PREPARED BY ME OR UNDER MY SUPERVISION

Stanley M.O.T. Chung

DATE	REVISION

STATE OF HAWAII
DEPARTMENT OF TRANSPORTATION
HIGHWAYS DIVISION

BLOCK DIAGRAM
RADIO SYSTEMS

EXPLORATORY TUNNEL IMPROVEMENTS
H-3 FINISH (UNIT III)
FAIP NO. I-H3-1(75), UNIT III
T.K. TUNNEL/ACCESS ROADS

SCALE: NONE DATE: JUN 1995

SHEET NO. 2T6 OF 21 SHEETS

P:\H3\CONT.75\UNIT-III\EXP-TUN\H3-2T07.DWG

FED. ROAD DIST. NO.	STATE	FED. AID PROJ. NO.	FISCAL YEAR	SHEET NO.	TOTAL SHEETS
HAWAII	HAW.	I-H3-1(75) UNIT III	1994	109	353

XREF LIST:
ETI-BROR
EXP-TUN
SCALE40

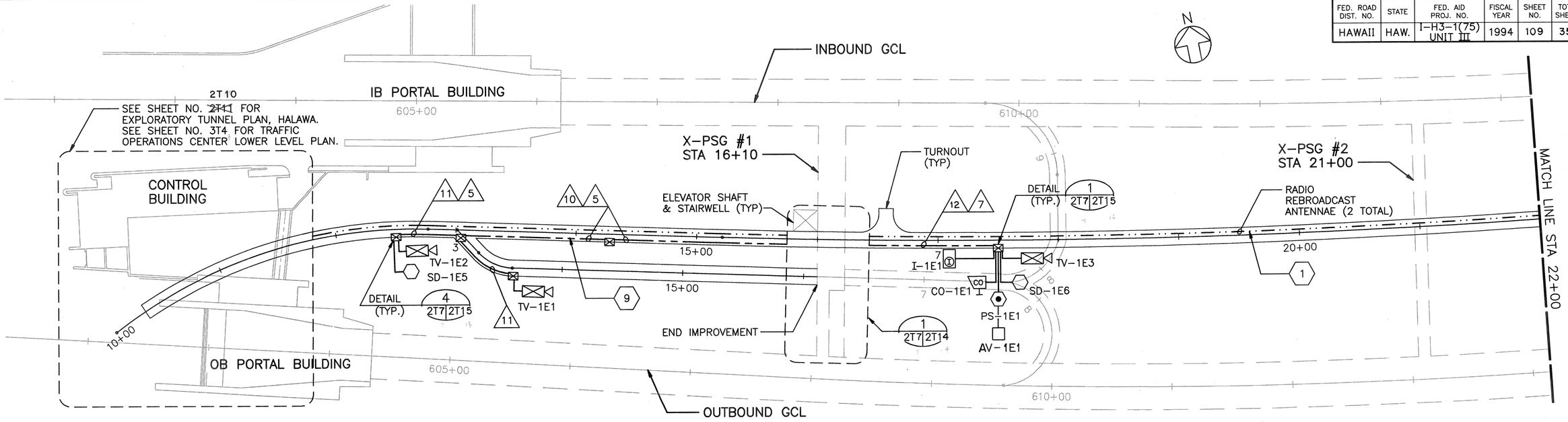

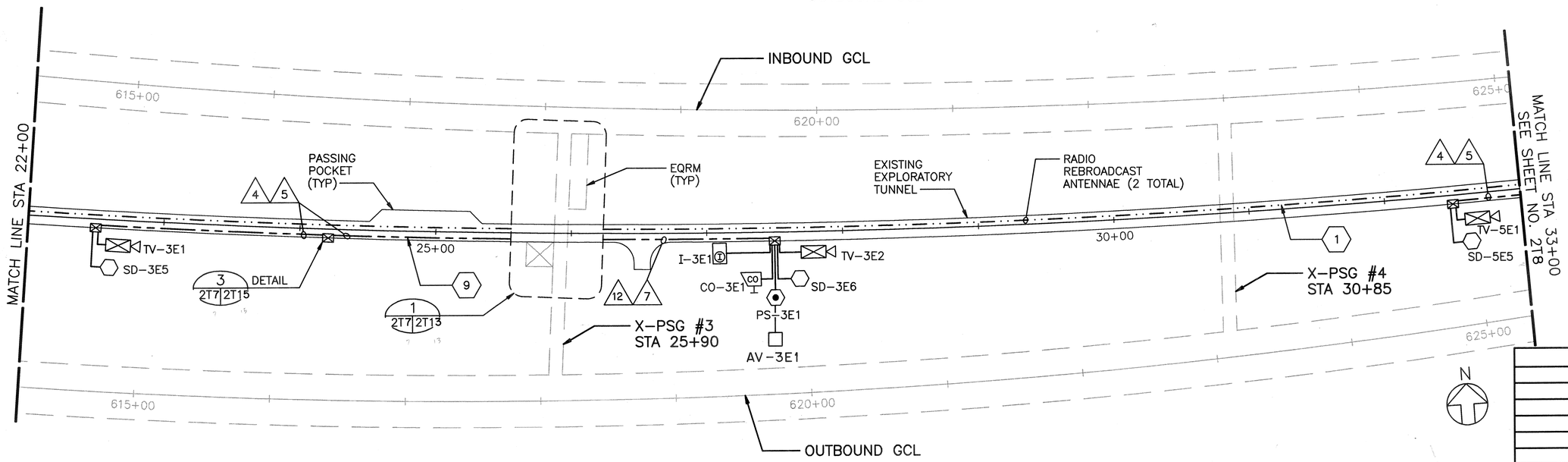

NOTES:
1. SEE SHEET NO. 2T1 FOR CONDUIT & CABLE SCHEDULE & CONSTRUCTION NOTES.
2. SEE SHEET NO. 2T15 FOR TYPICAL CROSS SECTION AT TUNNEL.

GRAPHIC SCALE:
40' 20' 0' 40' 80'
1" = 40'-0"

STANLEY M.O.T. CHING
LICENSED PROFESSIONAL ENGINEER
No. 6312-C
HAWAII, U.S.A.

THIS WORK WAS PREPARED BY ME OR UNDER MY SUPERVISION
Stanley M.O.T. Ching

DATE	REVISION

STATE OF HAWAII
DEPARTMENT OF TRANSPORTATION
HIGHWAYS DIVISION

SYSTEMS PLAN – 1

EXPLORATORY TUNNEL IMPROVEMENTS
H-3 FINISH (UNIT III)
FAIP NO. I-H3-1(75), UNIT III
T.K. TUNNEL/ACCESS ROADS
SCALE: 1" = 40' DATE: JUN 1995

SHEET NO. 2T7 OF 21 SHEETS

ORIGINAL PLAN
SURVEY PLOTTED BY
DRAWN BY P. R. E. HITT DATE 10/94
TRACED BY
DESIGNED BY L. Y. NELSON 10/94
QUANTITIES BY
CHECKED BY
NOTE BOOK
No.

P:\H3\CONT.75\UNIT-III\EXP-TUN\H3-2T08.DWG

FED. ROAD DIST. NO.	STATE	FED. AID PROJ. NO.	FISCAL YEAR	SHEET NO.	TOTAL SHEETS
HAWAII	HAW.	I-H3-1(75) UNIT III	1994	110	353

XREF LIST:
ETI-BRDR
EXP-TUN
SCALE40

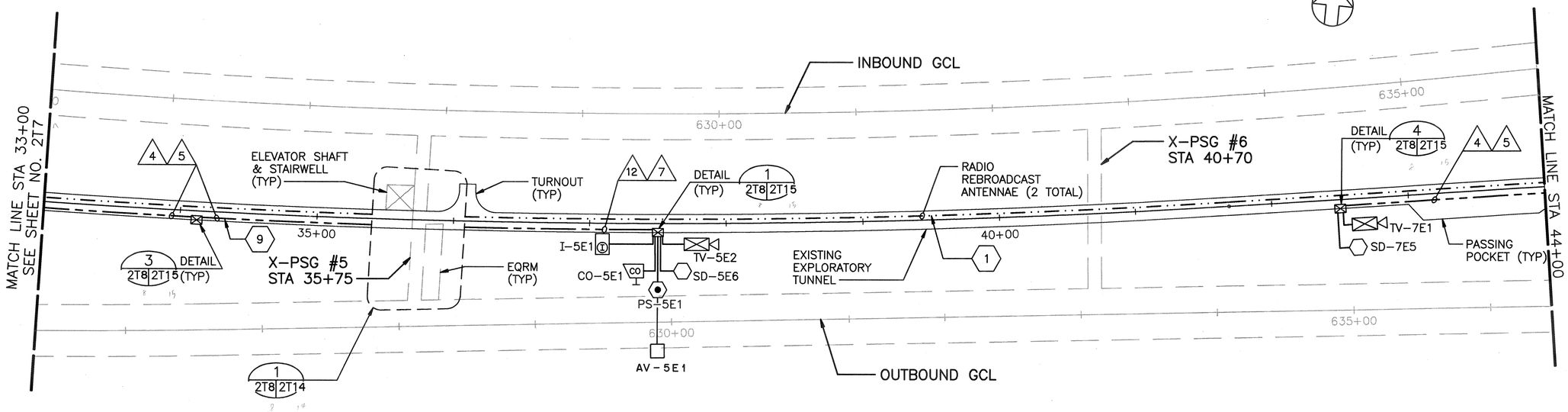

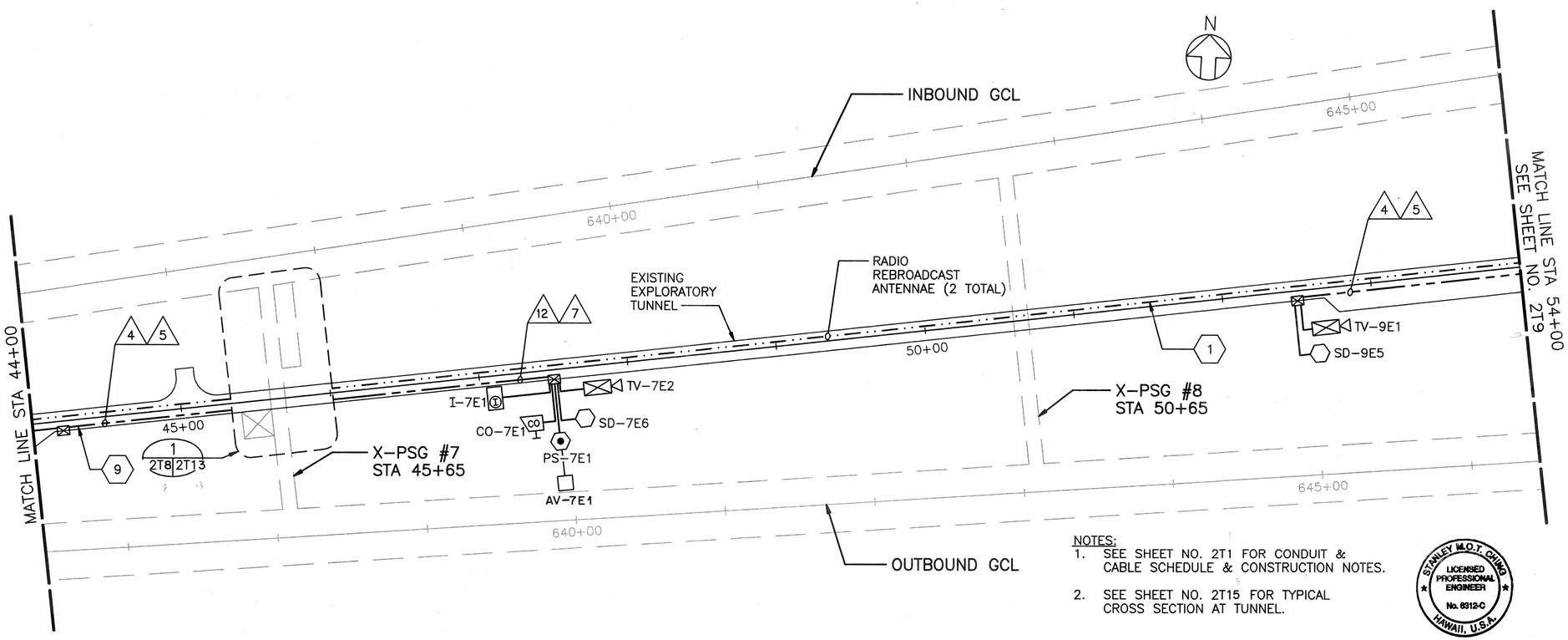

NOTES:
1. SEE SHEET NO. 2T1 FOR CONDUIT & CABLE SCHEDULE & CONSTRUCTION NOTES.
2. SEE SHEET NO. 2T15 FOR TYPICAL CROSS SECTION AT TUNNEL.

GRAPHIC SCALE:
40' 20' 0' 40' 80'
1" = 40'-0"

STANLEY M.O.T. CHING
LICENSED PROFESSIONAL ENGINEER
No. 6312-C
HAWAII, U.S.A.

THIS WORK WAS PREPARED BY ME OR UNDER MY SUPERVISION
Stanley M.O.T. Ching

DATE	REVISION

STATE OF HAWAII
DEPARTMENT OF TRANSPORTATION
HIGHWAYS DIVISION

SYSTEMS PLAN – 2

EXPLORATORY TUNNEL IMPROVEMENTS
H-3 FINISH (UNIT III)
FAIP NO. I-H3-1(75), UNIT III
T.K. TUNNEL/ACCESS ROADS
SCALE: 1" = 40' DATE: JUN 1995

SHEET NO. 2T8 OF 21 SHEETS

ORIGINAL PLAN	SURVEY PLOTTED BY P. R. E. HITT	DATE 10/94
	DRAWN BY " " " "	
NOTE BOOK	TRACED BY " " " "	
	DESIGNED BY L. Y. NELSON	10/94
No.	QUANTITIES BY	
	CHECKED BY	

P:\H3\CONT.75\UNIT-III\EXP-TUN\H3-2T09.DWG

FED. ROAD DIST. NO.	STATE	FED. AID PROJ. NO.	FISCAL YEAR	SHEET NO.	TOTAL SHEETS
HAWAII	HAW.	I-H3-1(75) UNIT III	1994	111	353

XREF LIST:
ETI-BRDR
EXP-TUN
SCALE40

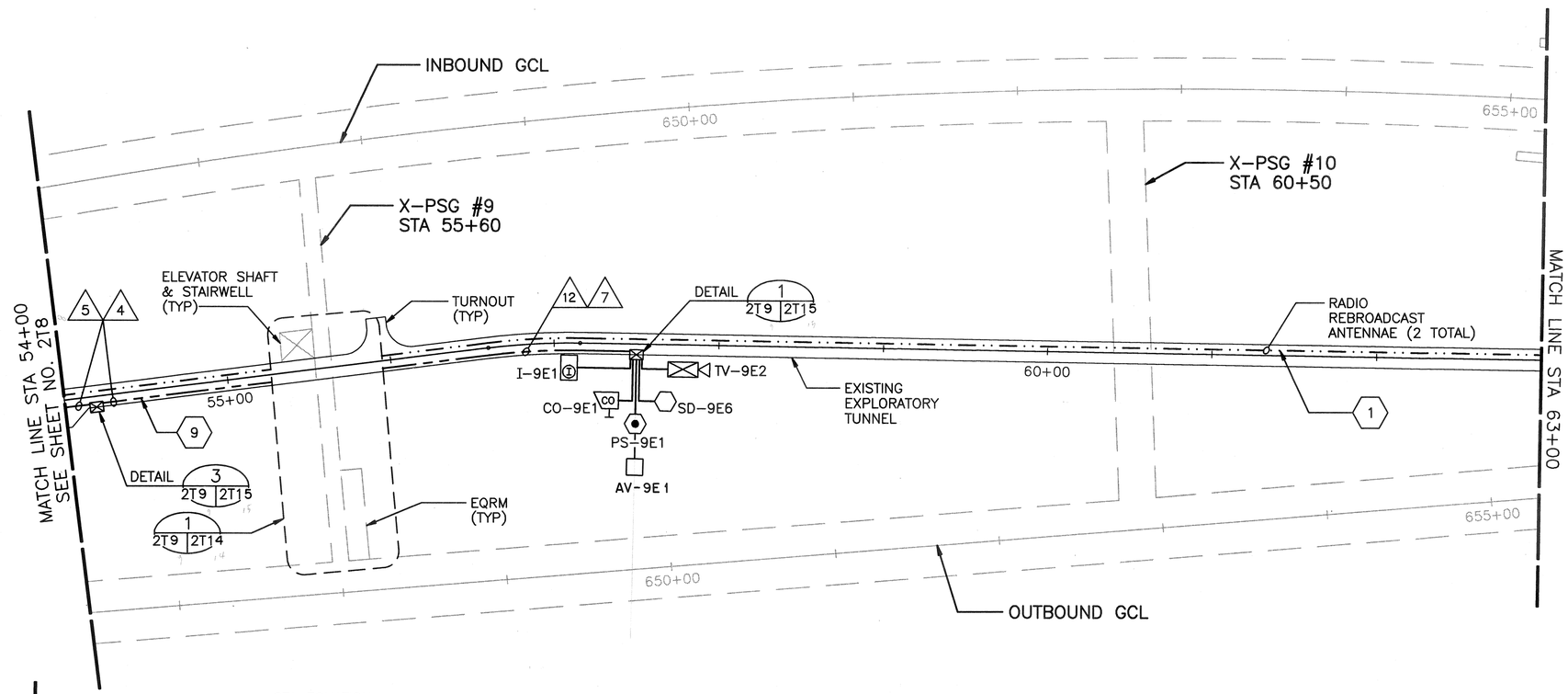

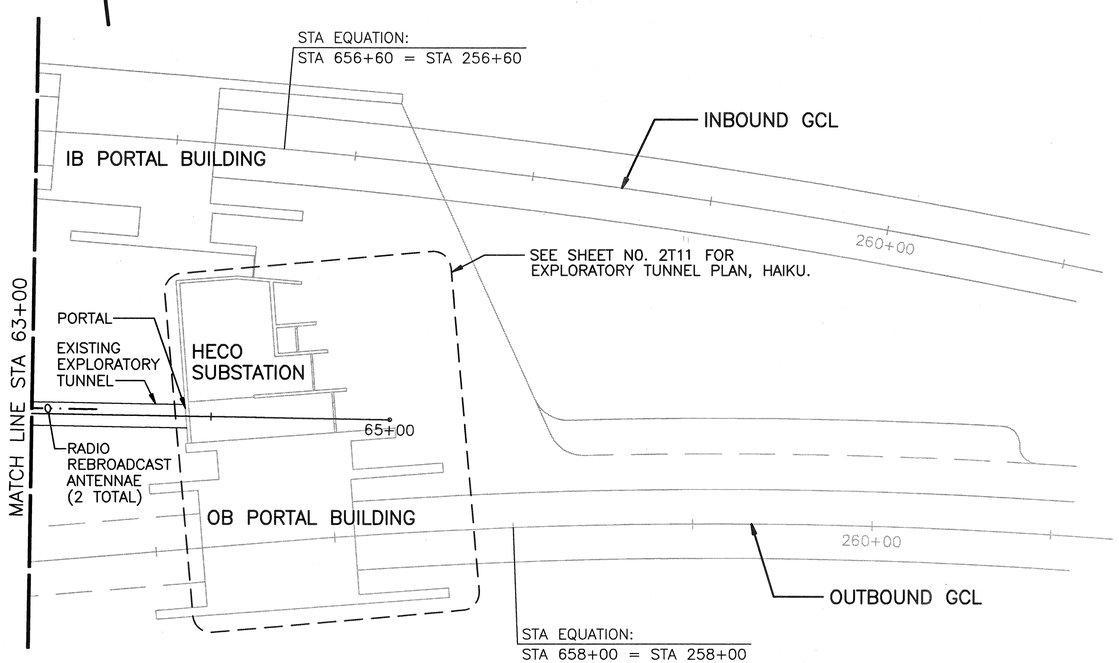

NOTES:
1. SEE SHEET NO. 2T1 FOR CONDUIT & CABLE SCHEDULE & CONSTRUCTION NOTES.
2. SEE SHEET NO. 2T15 FOR TYPICAL CROSS SECTION AT TUNNEL.

GRAPHIC SCALE:
40' 20' 0' 40' 80'
1" = 40'-0"

STANLEY M.O.T. CHUNG
LICENSED PROFESSIONAL ENGINEER
No. 6312-C
HAWAII, U.S.A.

THIS WORK WAS PREPARED BY ME OR UNDER MY SUPERVISION
Stanley M.O.T. Chung

DATE	REVISION

STATE OF HAWAII
DEPARTMENT OF TRANSPORTATION
HIGHWAYS DIVISION

SYSTEMS PLAN – 3

EXPLORATORY TUNNEL IMPROVEMENTS
H-3 FINISH (UNIT III)
FAIP NO. I-H3-1(75), UNIT III
T.K. TUNNEL/ACCESS ROADS

SCALE: 1" = 40' DATE: JUN 1995

SHEET NO. 2T9 OF 21 SHEETS

ORIGINAL PLAN
NOTE BOOK
No.
SURVEY PLOTTED BY
DRAWN BY P. R. E. HITT DATE 10/94
TRACED BY
DESIGNED BY L. Y. NELSON 10/94
QUANTITIES BY
CHECKED BY

P:\H3\CONT.75\UNIT-III\EXP-TUN\H3-2T10.DWG

FED. ROAD DIST. NO.	STATE	FED. AID PROJ. NO.	FISCAL YEAR	SHEET NO.	TOTAL SHEETS
HAWAII	HAW.	I-H3-1(75) UNIT III	1994	112	353

XREF LIST:
ETI-BRDR
HAL-LOWR
SCALES

DETAIL @ PEDESTRIAN DOOR
SCALE: 1" = 2'-0"

1

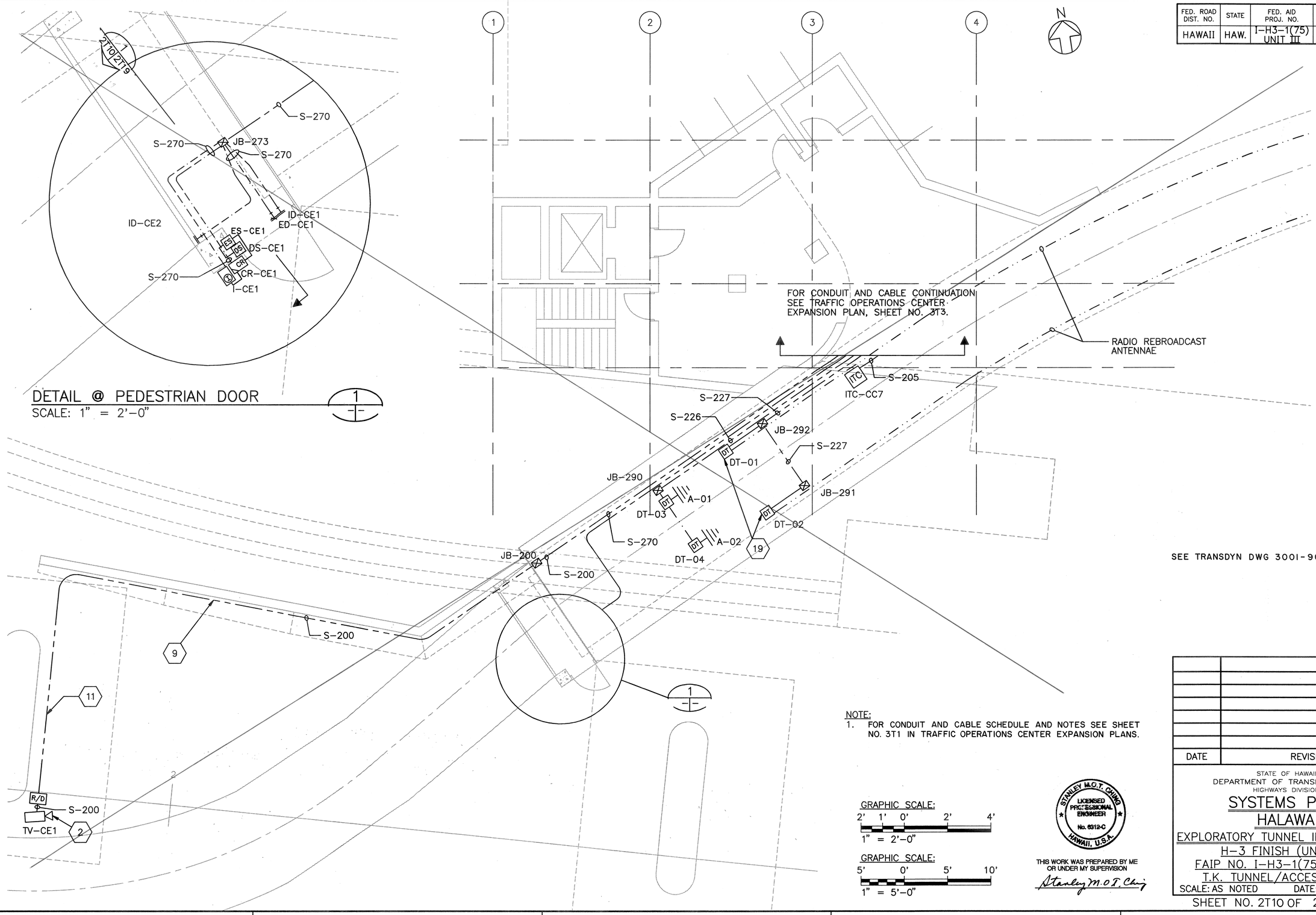

SEE TRANSDYN DWG 3001-900-9009

NOTE:
1. FOR CONDUIT AND CABLE SCHEDULE AND NOTES SEE SHEET NO. 3T1 IN TRAFFIC OPERATIONS CENTER EXPANSION PLANS.

GRAPHIC SCALE:
2' 1' 0' 2' 4'
1" = 2'-0"

GRAPHIC SCALE:
5' 0' 5' 10'
1" = 5'-0"

STANLEY M.O.T. CHING
LICENSED PROFESSIONAL ENGINEER
No. 6312-C
HAWAII, U.S.A.

THIS WORK WAS PREPARED BY ME OR UNDER MY SUPERVISION
Stanley M.O.T. Ching

DATE	REVISION

STATE OF HAWAII
DEPARTMENT OF TRANSPORTATION
HIGHWAYS DIVISION

SYSTEMS PLAN
HALAWA
EXPLORATORY TUNNEL IMPROVEMENTS
H-3 FINISH (UNIT III)
FAIP NO. I-H3-1(75), UNIT III
T.K. TUNNEL/ACCESS ROADS
SCALE: AS NOTED DATE: JUN 1995

SHEET NO. 2T10 OF 21 SHEETS

ORIGINAL PLAN	SURVEY PLOTTED BY	DATE
	DRAWN BY P. R. E. HITT	10/94
NOTE BOOK	TRACED BY	
	DESIGNED BY D. D. ANDERSON	10/94
No.	QUANTITIES BY	
	CHECKED BY	

P:\H3\CONT.75\UNIT-III\EXP-TUN\H3-2T11.DWG

FED. ROAD DIST. NO.	STATE	FED. AID PROJ. NO.	FISCAL YEAR	SHEET NO.	TOTAL SHEETS
HAWAII	HAW.	I-H3-1(75) UNIT III	1994	113	353

XREF LIST:
ETI-BRDR
HKU-LVLA
SCALE96

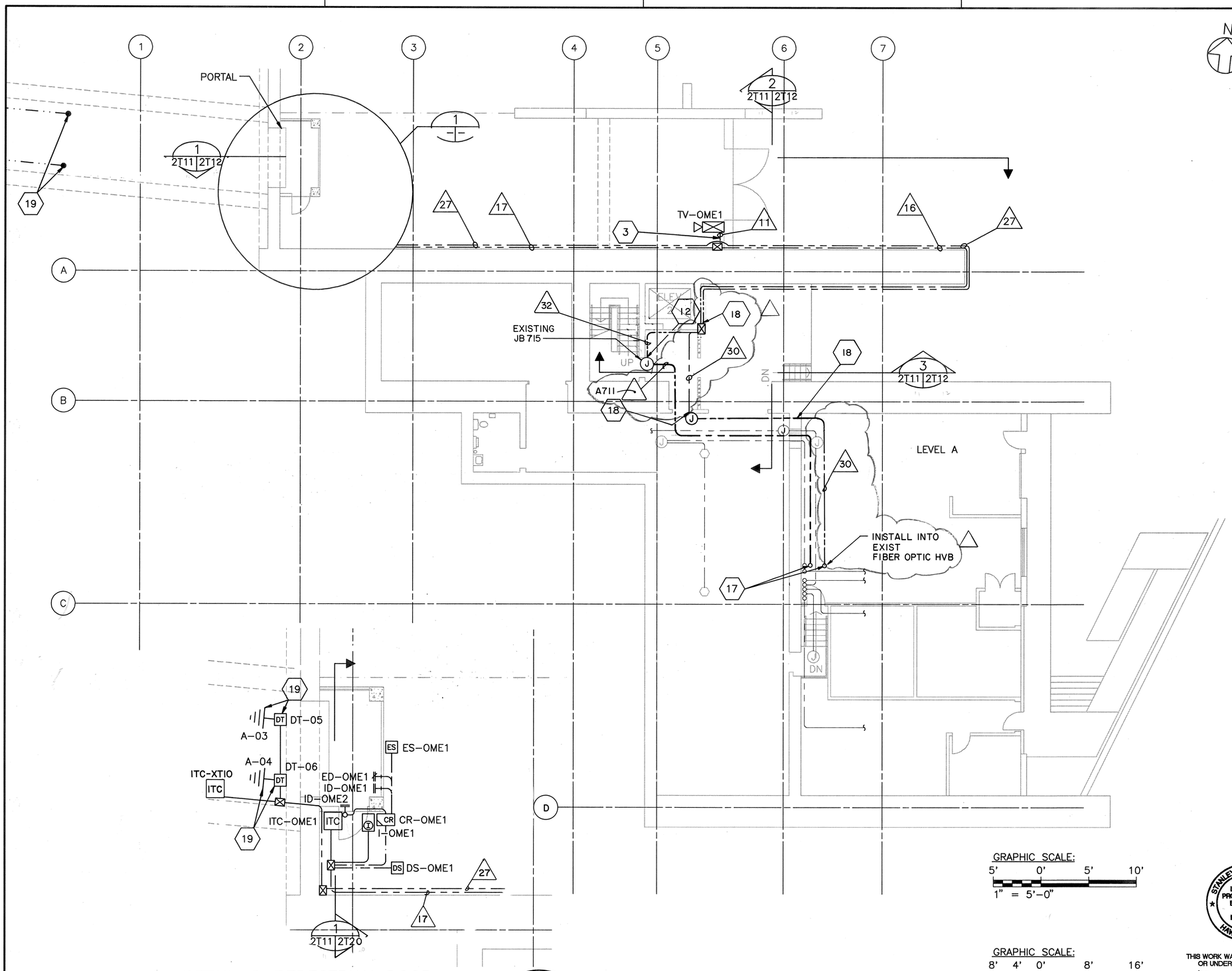

NOTES:
1. SEE SHEET NO. 2T1 FOR CONDUIT & CABLE SCHEDULE & CONSTRUCTION NOTES.

DETAIL @ PEDESTRIAN DOOR
SCALE: 1" = 5'-0"

GRAPHIC SCALE:
5' 0' 5' 10'
1" = 5'-0"

GRAPHIC SCALE:
8' 4' 0' 8' 16'
1/8" = 1'-0"

STANLEY M.O.T. CHING
LICENSED PROFESSIONAL ENGINEER
No. 6312-C
HAWAII, U.S.A.

THIS WORK WAS PREPARED BY ME OR UNDER MY SUPERVISION
Stanley M.O.T. Ching

1/14/97	DCN 75-010: REVISED PER RESPONSE TO RFI # 4097-136
10/27/95	ADDENDUM 2-ADDED CONDUIT RUNS 30,31,32
10/13/95	ADDENDUM 1
DATE	REVISION

STATE OF HAWAII
DEPARTMENT OF TRANSPORTATION
HIGHWAYS DIVISION

SYSTEMS PLAN
HAIKU
EXPLORATORY TUNNEL IMPROVEMENTS
H-3 FINISH (UNIT III)
FAIP NO. I-H3-1(75), UNIT III
T.K. TUNNEL/ACCESS ROADS

SCALE: AS NOTED DATE: JUN 1995

SHEET NO. 2T11 OF 21 SHEETS

SURVEY PLOTTED BY		DATE
DRAWN BY	P. R. E. HITT	11/94
TRACED BY		
DESIGNED BY	W. D. ANDERSON	11/94
QUANTITIES BY		
CHECKED BY		
ORIGINAL PLAN	NOTE BOOK	No.

P:\H3\CONT.75\UNIT-III\EXP-TUN\H3-2T12.DWG

ADD. 113

FED. ROAD DIST. NO.	STATE	FED. AID PROJ. NO.	FISCAL YEAR	SHEET NO.	TOTAL SHEETS
HAWAII	HAW.	I-H3-1(75) UNIT III	1994	114	353

XREF LIST:
ETI-BRDR
SCALE96

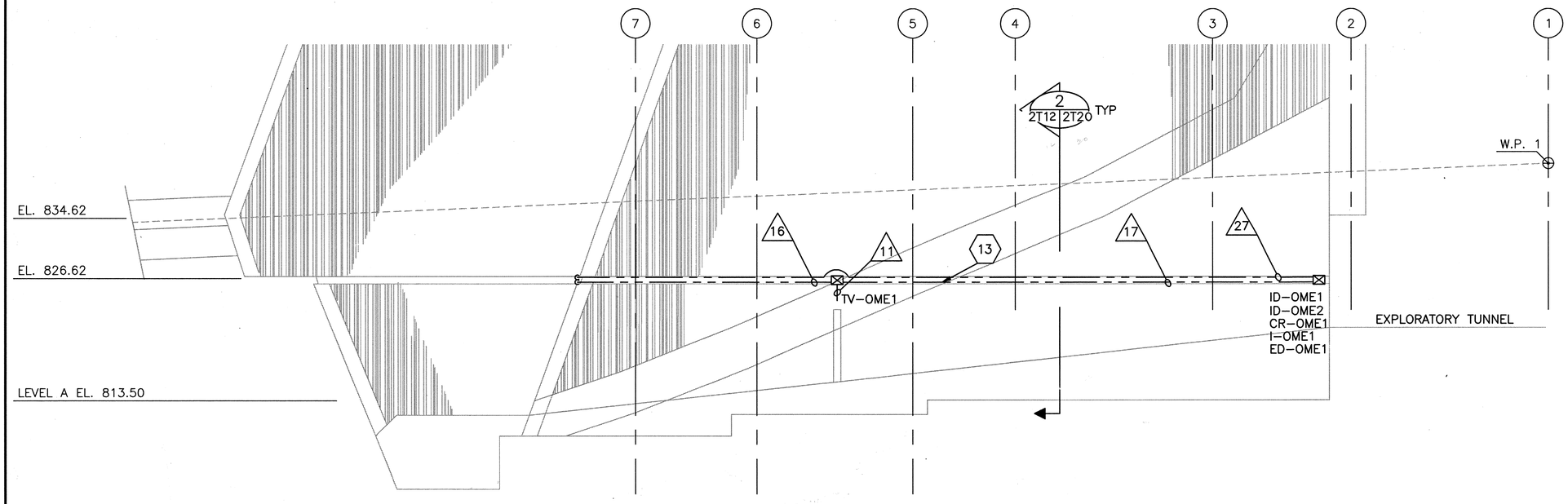

NORTH ELEVATION
SCALE: 1/8" = 1'-0"
1
2T11 2T12

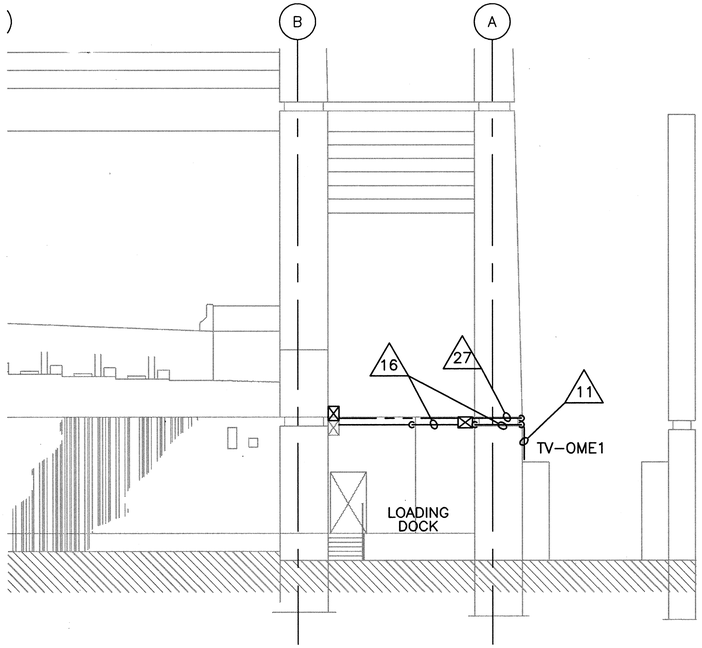

EAST ELEVATION
SCALE: 1/8" = 1'-0"
2
2T11 2T12

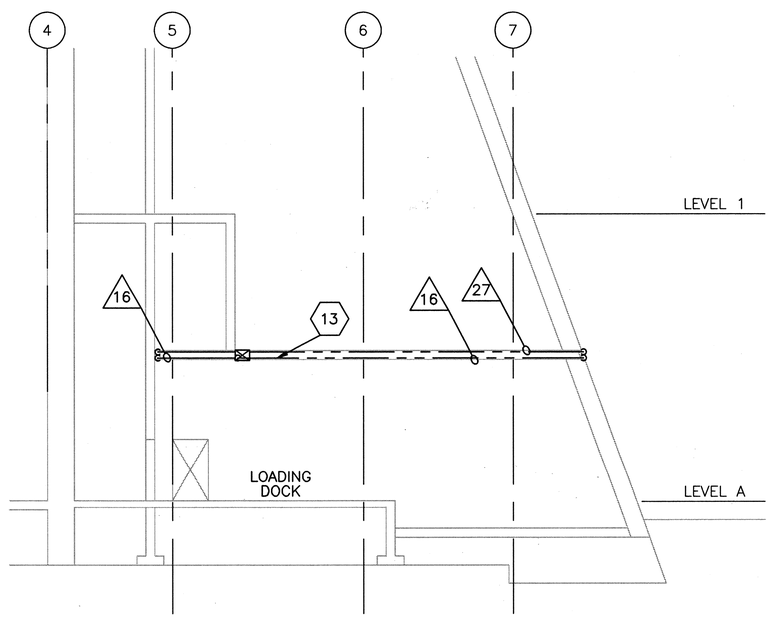

LONGITUDINAL SECTION
SCALE: 1/8" = 1'-0"
3
2T11 2T12

NOTES:
1. SEE SHEET NO. 2T1 FOR CONDUIT & CABLE SCHEDULE & CONSTRUCTION NOTES.

GRAPHIC SCALE:
8' 4' 0' 8' 16'
1/8" = 1'-0"

THIS WORK WAS PREPARED BY ME OR UNDER MY SUPERVISION
Stanley M.O.T. Chang

DATE	REVISION

STATE OF HAWAII
DEPARTMENT OF TRANSPORTATION
HIGHWAYS DIVISION

SYSTEMS PLAN
HAIKU – DETAILS

EXPLORATORY TUNNEL IMPROVEMENTS
H-3 FINISH (UNIT III)
FAIP NO. I-H3-1(75), UNIT III
T.K. TUNNEL/ACCESS ROADS

SCALE: 1/8" = 1'-0" DATE: JUN 1995

SHEET NO. 2T12 OF 21 SHEETS

ORIGINAL PLAN			
	SURVEY PLOTTED BY		DATE
	DRAWN BY	P. R. E. HITT	10/94
NOTE BOOK	TRACED BY		
	DESIGNED BY	W. D. ANDERSON	10/94
	QUANTITIES BY		
No.	CHECKED BY		

P:\H3\CONT.75\UNIT-III\EXP-TUN\H3-2T13.DWG

FED. ROAD DIST. NO.	STATE	FED. AID PROJ. NO.	FISCAL YEAR	SHEET NO.	TOTAL SHEETS
HAWAII	HAW.	I-H3-1(75) UNIT III	1994	115	353

XREF LIST:
ETI-BRDR
SCALE5

EQUIPMENT ROOM LEGEND

1	TC170
2	RTU/FICE
3	CCTV
4	SC
5	LH
6	CO
7	XFMR
8	PNL
9	FACP & ANNUN

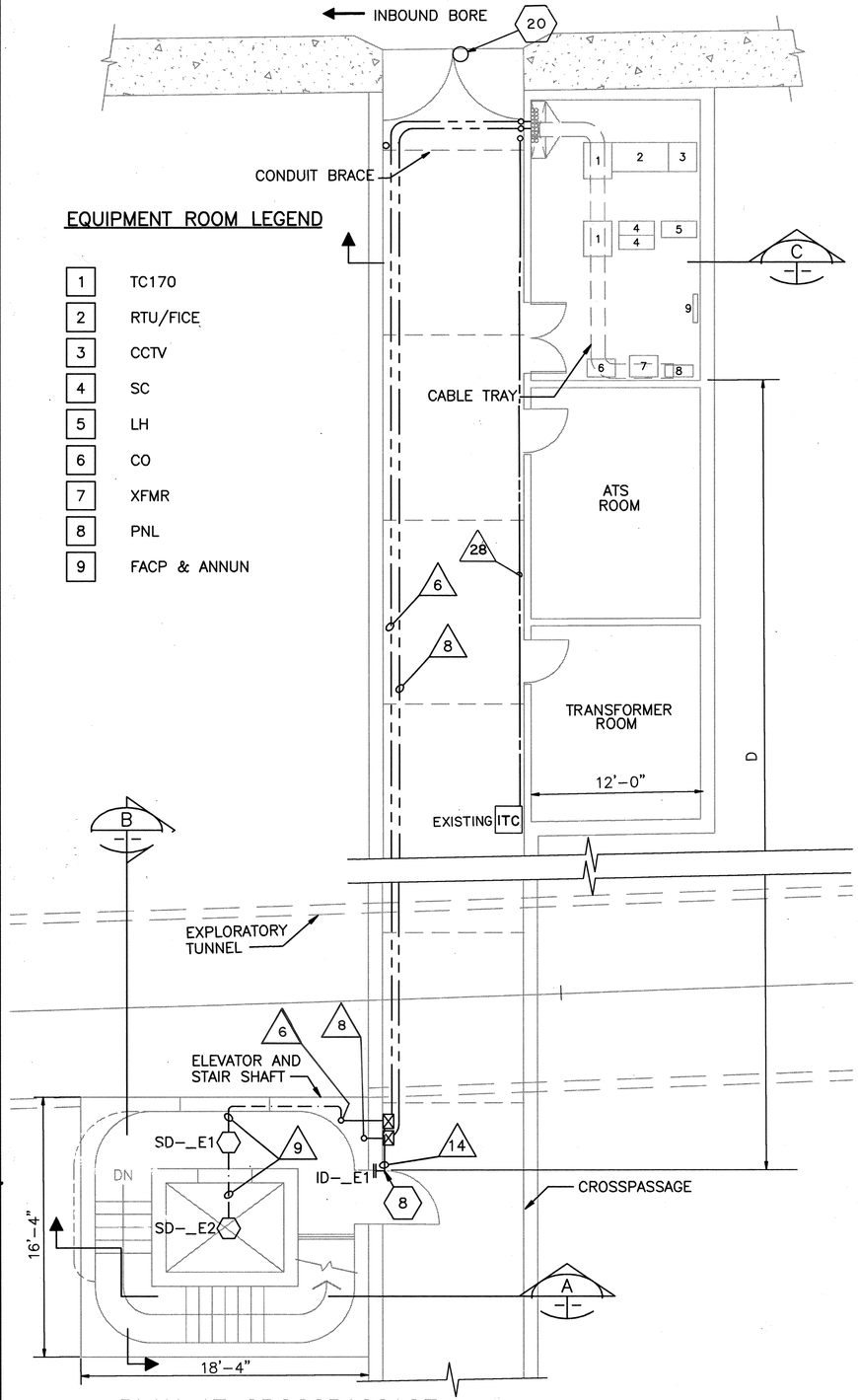

PLAN AT CROSSPASSAGE CONNECTION

SCALE: 1" = 5'-0"

1 (2T7, 2T8, 2T9 | 2T13)

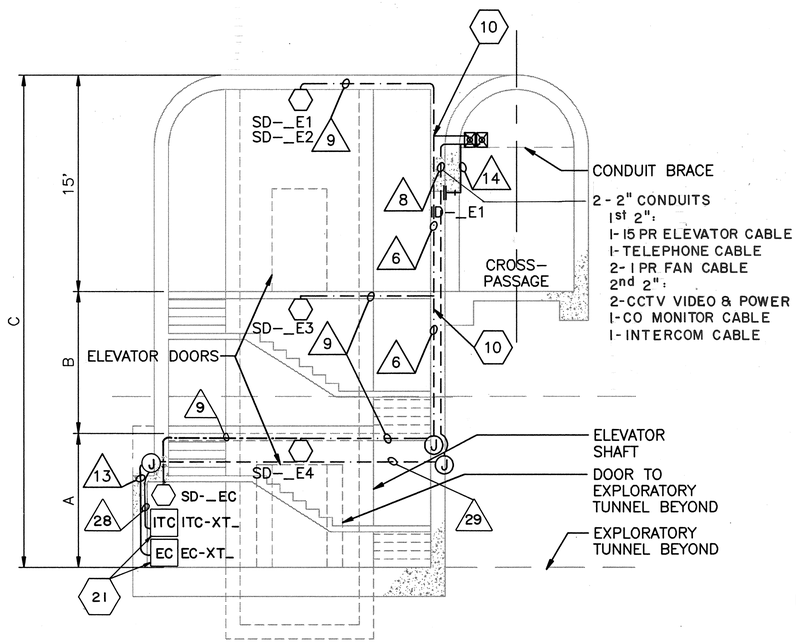

SECTION (TYP)

SCALE: 1" = 5'-0"

A

SHAFT & X-PSG DIMENSIONS

X-PSG	A	B	C	D
3	9'-3½"	9'-10½"	34'-2"	64'-2"
7	16'-10"	16'-10"	48'-8"	64'-2"

NOTES:
1. SEE SHEET NO. 2T1 FOR CONDUIT & CABLE SCHEDULE & CONSTRUCTION NOTES.
2. FOR AS BUILT CONDUITS AND WIRING, SEE TRANSDYN DRAWING 3001-900-9019 FOR CROSSPASSAGE 3; 3001-900-9021 FOR CROSSPASSAGE 7.

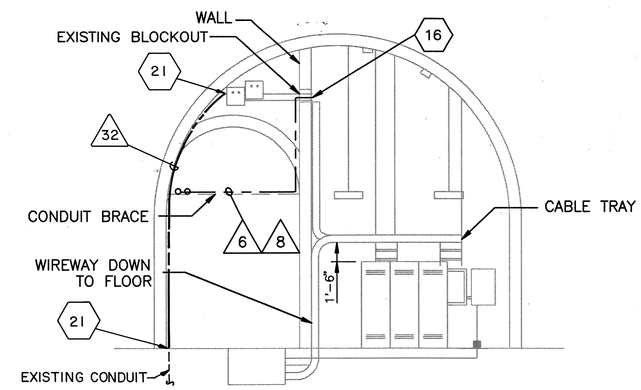

SECTION (TYP)

SCALE: 1" = 5'-0"

C

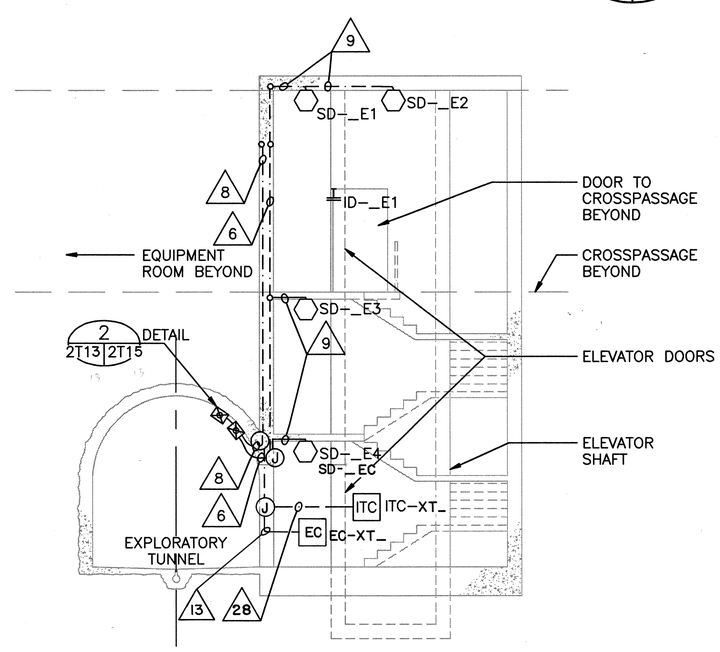

SECTION (TYP) LOOKING EAST

SCALE: 1" = 5'-0"

B

GRAPHIC SCALE:
5' 0' 5' 10'
1" = 5'-0"

STANLEY M.O.T. CHUNG
LICENSED PROFESSIONAL ENGINEER
No. 6312-C
HAWAII, U.S.A.

THIS WORK WAS PREPARED BY ME OR UNDER MY SUPERVISION
Stanley M.O.T. Chung

DATE	REVISION
10/27/95	ADDENDUM 2 - INDICATED ITC AS EXISTING AND ADDED CONDUIT RUN 32 IN SECTION 'C'
10/13/95	ADDENDUM 1

STATE OF HAWAII
DEPARTMENT OF TRANSPORTATION
HIGHWAYS DIVISION

CROSSPASSAGE 3 & 7 CONNECTIONS

EXPLORATORY TUNNEL IMPROVEMENTS
H-3 FINISH (UNIT III)
FAIP NO. I-H3-1(75), UNIT III
T.K. TUNNEL/ACCESS ROADS

SCALE: 1" = 5' DATE: JUN 1995

SHEET NO. 2T13 OF 21 SHEETS

ORIGINAL PLAN	SURVEY PLOTTED BY P. R. E. HITT	DATE 10/94	
NOTE BOOK	DRAWN BY		
	TRACED BY		
	DESIGNED BY L. Y. NELSON	10/94	
	QUANTITIES BY		
No.	CHECKED BY		

P:\H3\CONT.75\UNIT-III\EXP-TUN\H3-2T14.DWG

FED. ROAD DIST. NO.	STATE	FED. AID PROJ. NO.	FISCAL YEAR	SHEET NO.	TOTAL SHEETS
HAWAII	HAW.	I-H3-1(75) UNIT III	1994	116	353

XREF LIST:
ETI-BRDR
SCALE5

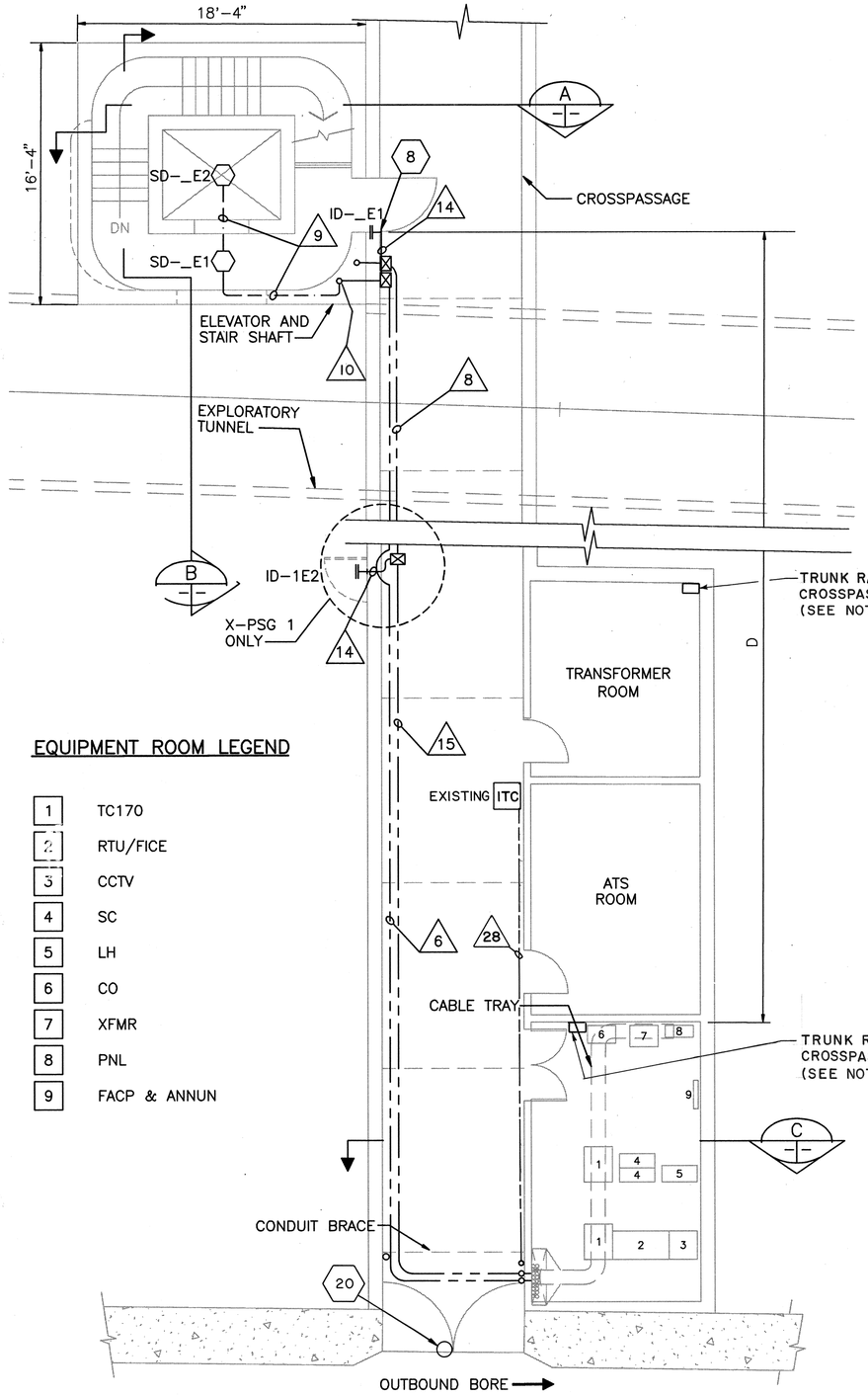

EQUIPMENT ROOM LEGEND

1	TC170
2	RTU/FICE
3	CCTV
4	SC
5	LH
6	CO
7	XFMR
8	PNL
9	FACP & ANNUN

PLAN AT CROSSPASSAGE CONNECTION
SCALE: 1" = 5'-0"
1 — 2T7, 2T8, 2T9 | 2T14

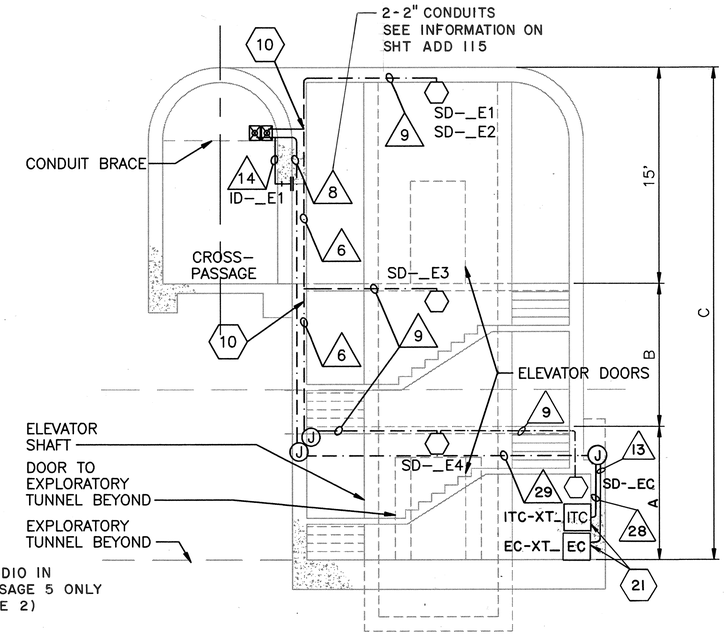

SECTION (TYP)
SCALE: 1" = 5'-0"
A

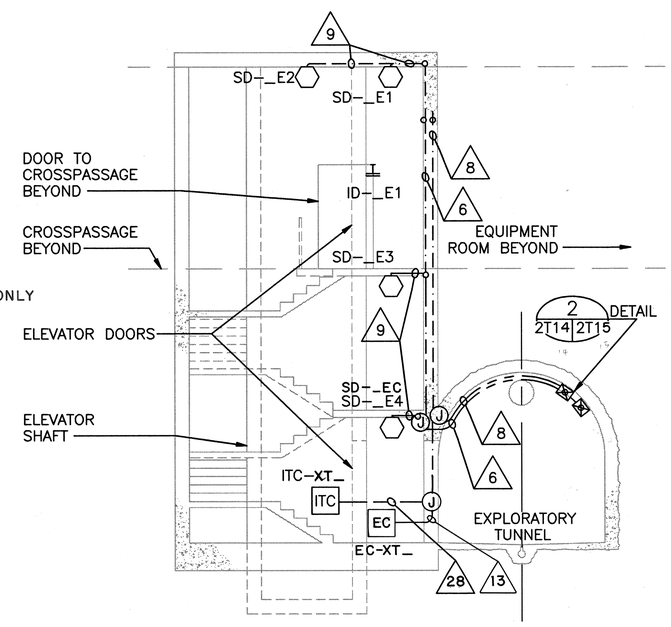

SECTION (TYP)
SCALE: 1" = 5'-0"
B

SHAFT & X-PSG DIMENSIONS

X-PSG	A	B	C	D
1	17'-3½"	17'-3½"	49'-7"	88'-2"
5	15'-8"	15'-8"	46'-4"	50'-2"
9	16'-10½"	16'-10½"	48'-9"	108'-2"

NOTES:
1. SEE SHEET NO. 2T1 FOR CONDUIT & CABLE SCHEDULE & CONSTRUCTION NOTES.
2. FOR TRUNK RADIOS IN CROSSPASSAGE 1 AND 5, SEE CTI DRAWINGS 1A, 1B, 7, 8, 9, 10A, 10B, 11B, 21, 22A, 22B.

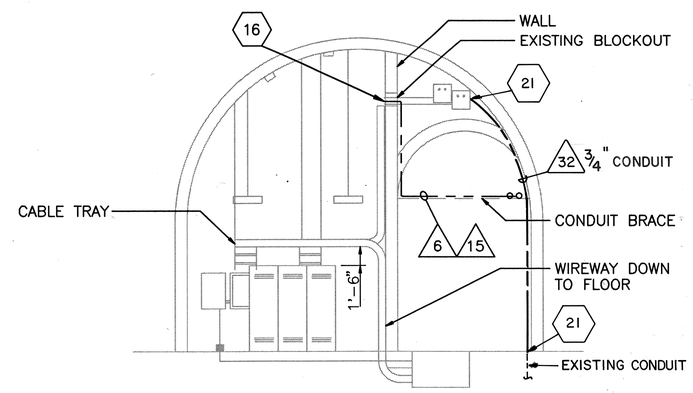

SECTION (TYP)
SCALE: 1" = 5'-0"
C

GRAPHIC SCALE:
5' 0' 5' 10'
1" = 5'-0"

DATE	REVISION
10/27/95	ADDENDUM 2 - INDICATED ITC AS EXISTING AND ADDED CONDUIT RUN 32 IN SECTION 'C'
10/13/95	ADDENDUM 1

STATE OF HAWAII
DEPARTMENT OF TRANSPORTATION
HIGHWAYS DIVISION

CROSSPASSAGE 1, 5 & 9 CONNECTIONS

EXPLORATORY TUNNEL IMPROVEMENTS
H-3 FINISH (UNIT III)
FAIP NO. I-H3-1(75), UNIT III
T.K. TUNNEL/ACCESS ROADS

SCALE: 1" = 5' DATE: JUN 1995

STANLEY M.O.T. CHING
LICENSED PROFESSIONAL ENGINEER
No. 6312-C
HAWAII, U.S.A.

THIS WORK WAS PREPARED BY ME OR UNDER MY SUPERVISION
Stanley M.O.T. Ching

ORIGINAL PLAN		DATE
	SURVEY PLOTTED BY P. R. E. HITT	10/94
	DRAWN BY	
	TRACED BY	
NOTE BOOK	DESIGNED BY L. Y. NELSON	10/94
	QUANTITIES BY	
	CHECKED BY	
No.		

SHEET NO. 2T14 OF 21 SHEETS

P:\H3\CONT.75\UNIT-III\EXP-TUN\H3-2T15.DWG

ADD.116

FED. ROAD DIST. NO.	STATE	FED. AID PROJ. NO.	FISCAL YEAR	SHEET NO.	TOTAL SHEETS
HAWAII	HAW.	I-H3-1(75) UNIT III	1994	117	353

XREF LIST:
ETI-BRDR
SCALE24

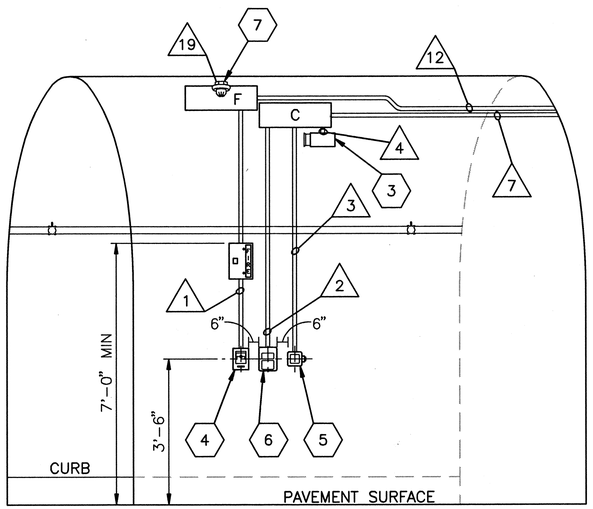

DETAIL 1
SCALE: ½" = 1'-0" 2T7,2T8,2T9 2T15

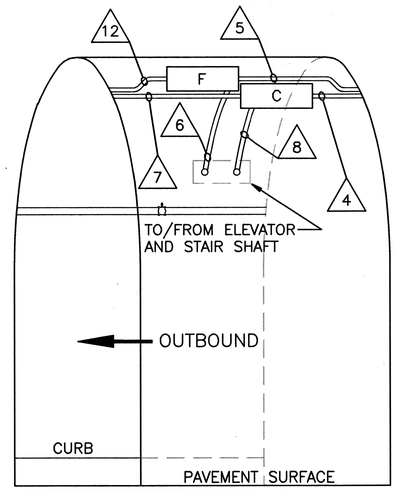

DETAIL 2
SCALE: ½" = 1'-0" 2T13,2T14 2T15

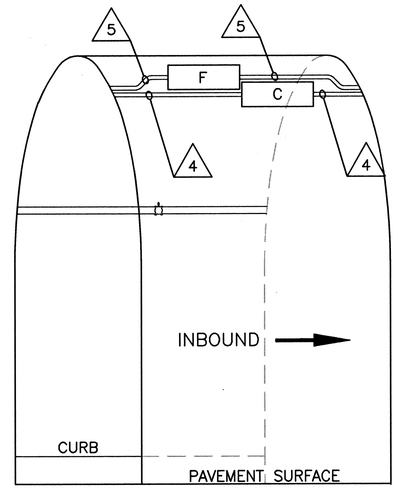

DETAIL 3
SCALE: ½" = 1'-0" 2T7,2T8,2T9 2T15

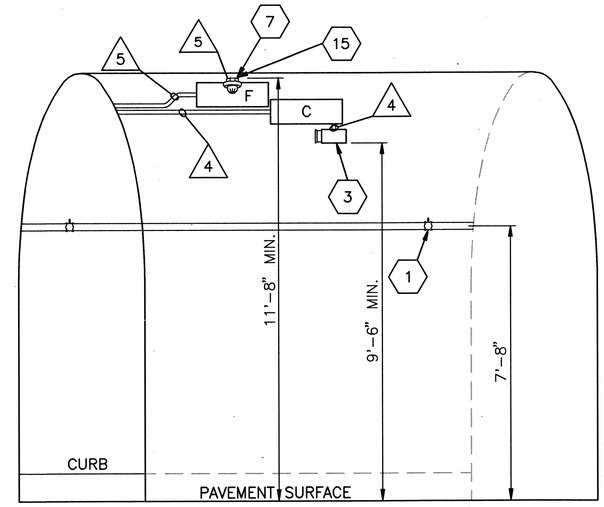

DETAIL 4
SCALE: ½" = 1'-0" 2T7,2T8 2T15

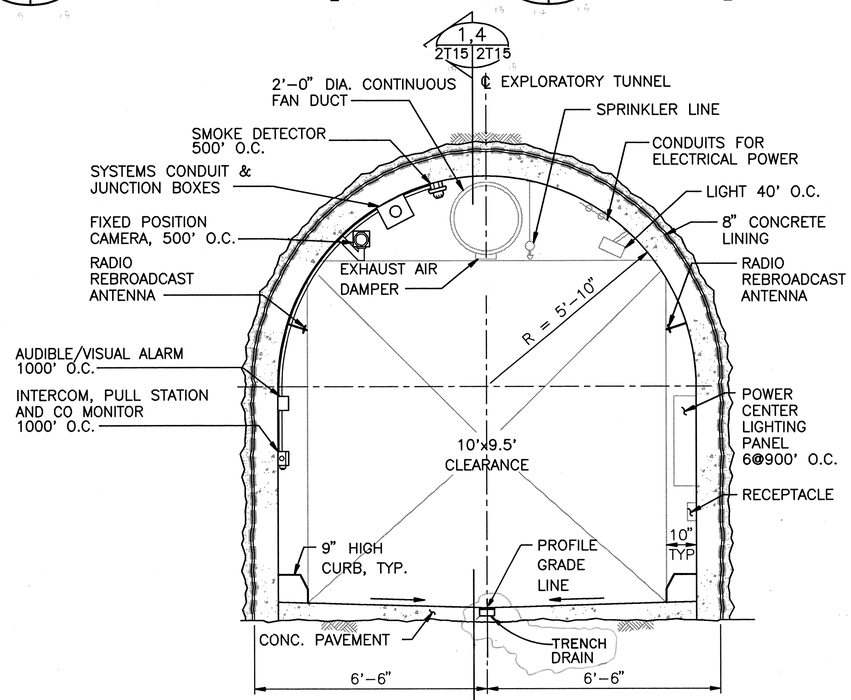

CROSS SECTION AT TUNNEL
SCALE: ½" = 1'-0"

GRAPHIC SCALE:
2' 1' 0' 2' 4'
½" = 1'-0"

STANLEY M.O.T. CHANG
LICENSED PROFESSIONAL ENGINEER
No. 6312-C
HAWAII, U.S.A.

THIS WORK WAS PREPARED BY ME OR UNDER MY SUPERVISION
Stanley M.O.T. Chang

8/21/96	DCN 75-007: REV. ET DRAIN
4/18/96	DCN 75-001: CLARIFICATION OF 'PROFILE GRADE LINE' LOCATION PER RESPONSE TO RFI NO. 4097-17, REV. 1
DATE	REVISION

STATE OF HAWAII
DEPARTMENT OF TRANSPORTATION
HIGHWAYS DIVISION

MISCELLANEOUS DETAILS – 1

SYSTEMS

EXPLORATORY TUNNEL IMPROVEMENTS
H-3 FINISH (UNIT III)
FAIP NO. I-H3-1(75), UNIT III
T.K. TUNNEL/ACCESS ROADS

SCALE: ½" = 1'-0" DATE: JUN 1995

SHEET NO. 2T15 OF 21 SHEETS

ORIGINAL PLAN			
	SURVEY PLOTTED BY		DATE
	DRAWN BY	P. HITT	10/94
NOTE BOOK	TRACED BY		
	DESIGNED BY	L. NELSON/G. FROMM	10/94
	QUANTITIES BY		
No.	CHECKED BY		

P:\H3\CONT.75\UNIT-III\EXP-TUN\H3-2T16.DWG

FED. ROAD DIST. NO.	STATE	FED. AID PROJ. NO.	FISCAL YEAR	SHEET NO.	TOTAL SHEETS
HAWAII	HAW.	I-H3-1(75) UNIT III	1994	118	353

NOTES:

1. CABLES IN VERTICAL RUNS SHALL BE SUSPENDED SUCH THAT NONE OF THE CABLE WEIGHT IS TRANSFERRED TO THE CABLE CONNECTIONS OR TERMINATIONS.
2. PROVIDE SUFFICIENT CABLE/WIRE SLACK TO ALLOW FULL DESIGN MOVEMENT OF CAMERA.

XREF LIST:
ETI-BRDR
SCALE4
SCALE8

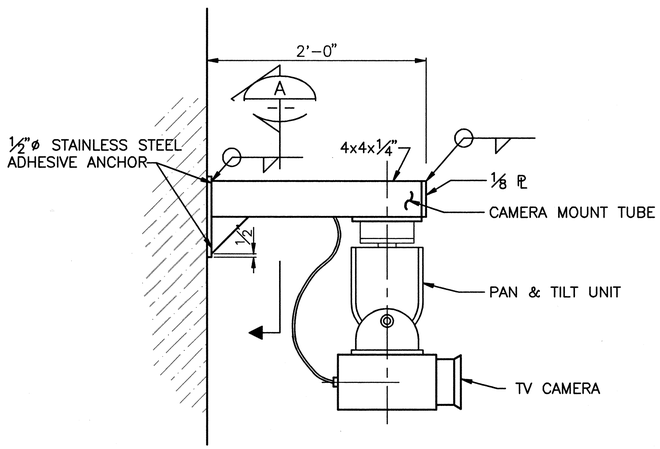

CCTV CAMERA MOUNTING DETAIL 1 (2T16)
SCALE: 1½" = 1'-0"

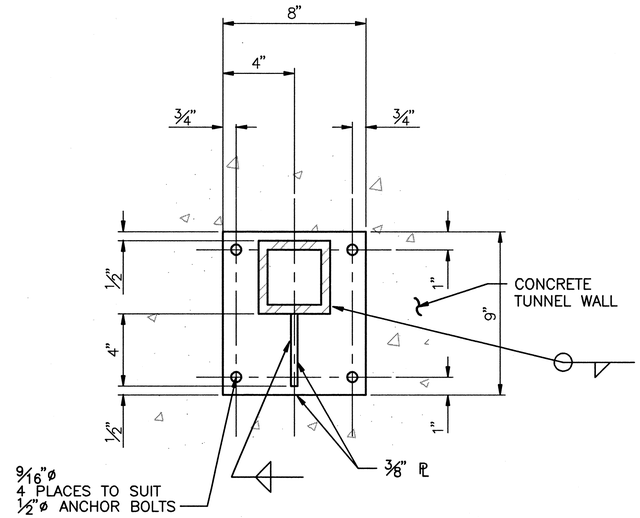

SECTION A
SCALE: 3" = 1'-0"

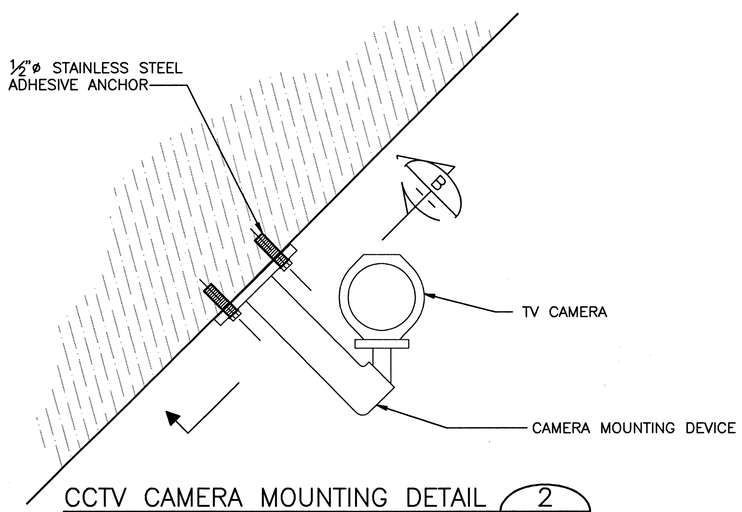

CCTV CAMERA MOUNTING DETAIL 2 (2T16)
SCALE: 1½" = 1'-0"

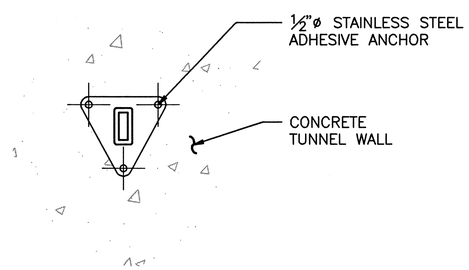

SECTION B
SCALE: 3" = 1'-0"

GRAPHIC SCALE:
12" 8" 4" 0" 12" 24"
1½" = 1'-0"

GRAPHIC SCALE:
4" 2" 0" 4" 8" 12"
3" = 1'-0"

STANLEY M.O.T. CHING
LICENSED PROFESSIONAL ENGINEER
No. 6312-C
HAWAII, U.S.A.

THIS WORK WAS PREPARED BY ME OR UNDER MY SUPERVISION

Stanley M.O.T. Ching

DATE	REVISION

STATE OF HAWAII
DEPARTMENT OF TRANSPORTATION
HIGHWAYS DIVISION

MISCELLANEOUS DETAILS – 2
SYSTEMS
EXPLORATORY TUNNEL IMPROVEMENTS
H-3 FINISH (UNIT III)
FAIP NO. I-H3-1(75), UNIT III
T.K. TUNNEL/ACCESS ROADS

SCALE: AS NOTED DATE: JUN 1995

SHEET NO. 2T16 OF 21 SHEETS

ORIGINAL PLAN		
NOTE BOOK	SURVEY PLOTTED BY	DATE
	DRAWN BY A. WRIGHT	11/94
	TRACED BY	
	DESIGNED BY D. ANDERSON/L. NELSON	11/94
	QUANTITIES BY	
No.	CHECKED BY	

P:\H3\CONT.75\UNIT-III\EXP-TUN\H3-2T17.DWG

FED. ROAD DIST. NO.	STATE	FED. AID PROJ. NO.	FISCAL YEAR	SHEET NO.	TOTAL SHEETS
HAWAII	HAW.	I-H3-1(75) UNIT III	1994	119	353

XREF LIST:
ETI-BRDR
SCALE2

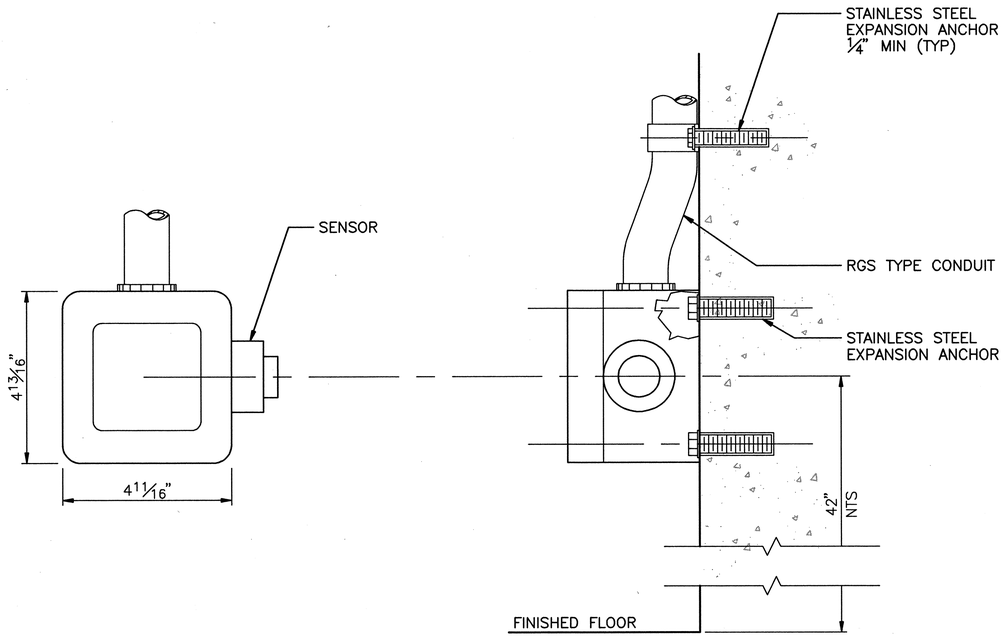

CO MONITOR DETAILS (1 / 2T17)
SCALE: 6" = 1'-0"

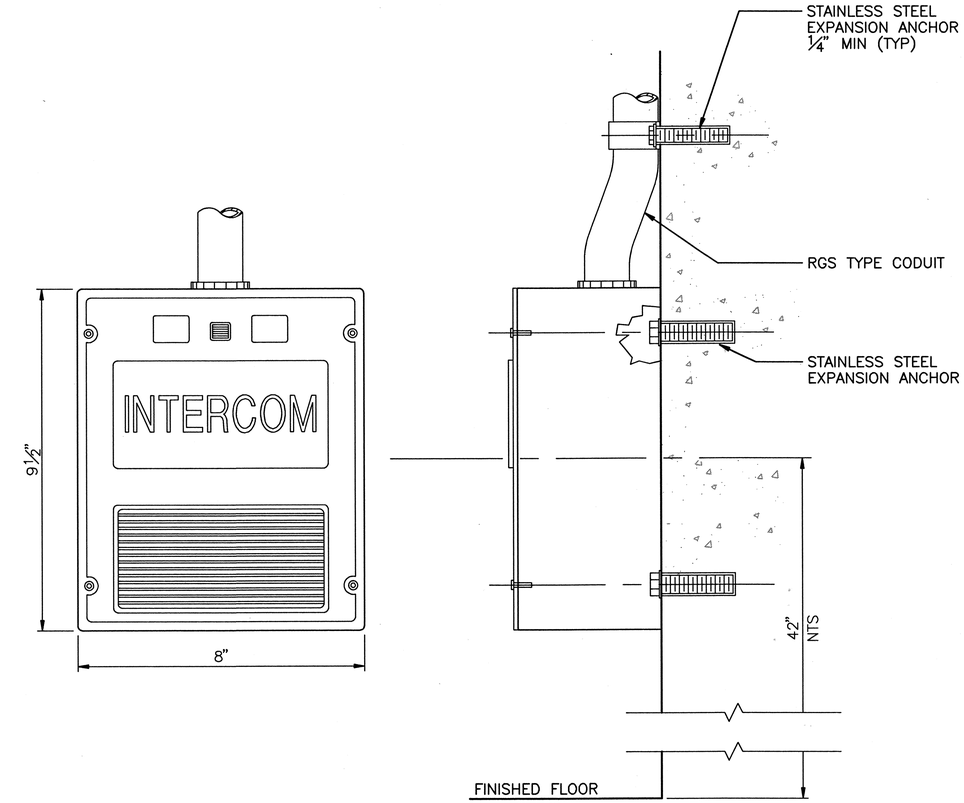

INTERCOM DETAILS (2 / 2T17)
SCALE: 6" = 1'-0"

GRAPHIC SCALE:
2" 1" 0" 2" 4"
6" = 1'-0"

STANLEY M.O.T. CHING
LICENSED PROFESSIONAL ENGINEER
No. 6312-C
HAWAII, U.S.A.

THIS WORK WAS PREPARED BY ME OR UNDER MY SUPERVISION
Stanley M.O.T. Ching

DATE	REVISION

STATE OF HAWAII
DEPARTMENT OF TRANSPORTATION
HIGHWAYS DIVISION

MISCELLANEOUS DETAILS – 3
SYSTEMS
EXPLORATORY TUNNEL IMPROVEMENTS
H-3 FINISH (UNIT III)
FAIP NO. I-H3-1(75), UNIT III
T.K. TUNNEL/ACCESS ROADS
SCALE: 6" = 1'-0" DATE: JUN 1995

SHEET NO. 2T17 OF 21 SHEETS

ORIGINAL PLAN		DATE
	SURVEY PLOTTED BY	
	DRAWN BY P. R. E. HITT	10/94
NOTE BOOK	TRACED BY	
	DESIGNED BY L. Y. NELSON	10/94
	QUANTITIES BY	
No.	CHECKED BY	

P:\H3\CONT.75\UNIT-III\EXP-TUN\H3-2T18.DWG

FED. ROAD DIST. NO.	STATE	FED. AID PROJ. NO.	FISCAL YEAR	SHEET NO.	TOTAL SHEETS
HAWAII	HAW.	I-H3-1(75) UNIT III	1994	120	353

XREF LIST:
ETI-BRDR
SCALE2

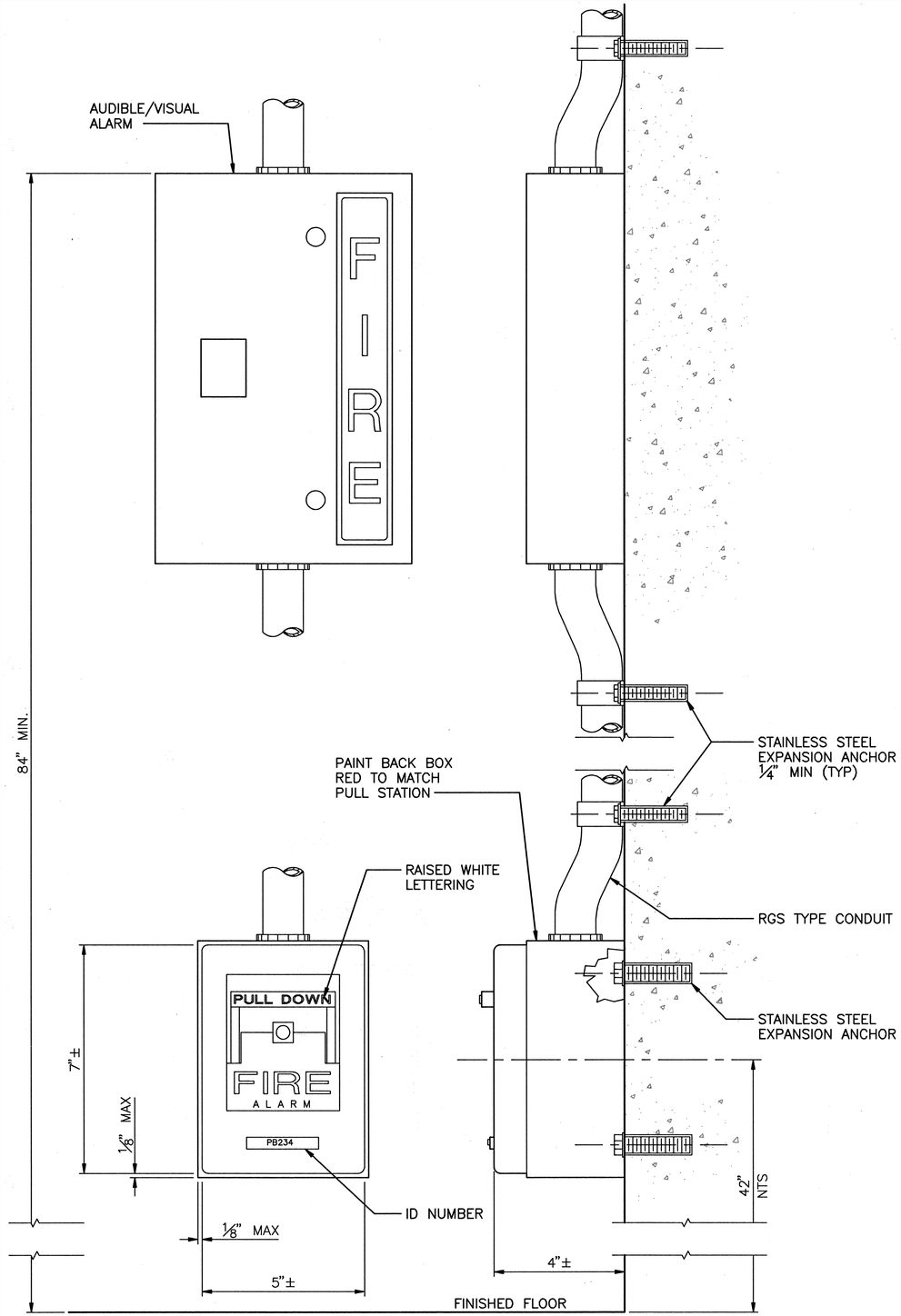

PULL STATION DETAIL (1 / 2T18)
SCALE: 6" = 1'-0"

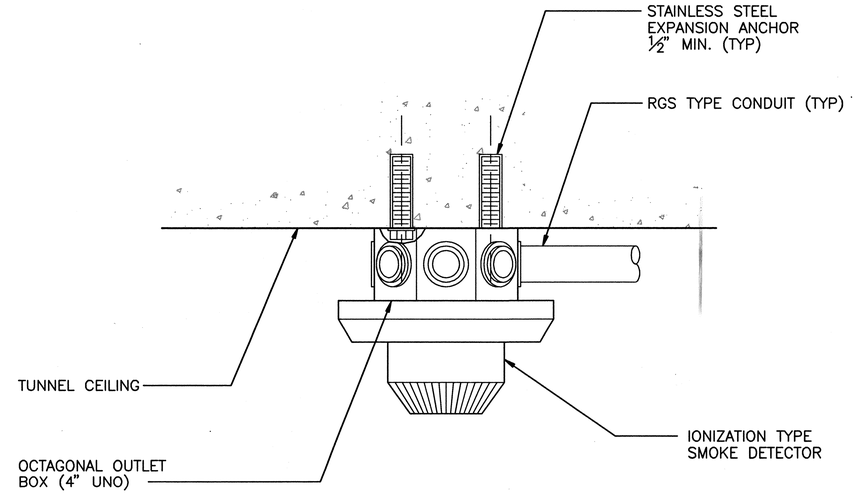

SMOKE DETECTOR CONNECTION – SURFACE MOUNTED (2 / 2T18)
SCALE: 6" = 1'-0"

GRAPHIC SCALE:
2" 1" 0" 2" 4"
6" = 1'-0"

STANLEY M.O.T. CHING
LICENSED PROFESSIONAL ENGINEER
No. 6312-C
HAWAII, U.S.A.

THIS WORK WAS PREPARED BY ME OR UNDER MY SUPERVISION
Stanley M.O.T. Ching

DATE	REVISION

STATE OF HAWAII
DEPARTMENT OF TRANSPORTATION
HIGHWAYS DIVISION

MISCELLANEOUS DETAILS – 4

SYSTEMS

EXPLORATORY TUNNEL IMPROVEMENTS
H-3 FINISH (UNIT III)
FAIP NO. I-H3-1(75), UNIT III
T.K. TUNNEL/ACCESS ROADS

SCALE: 6" = 1'-0" DATE: JUN 1995

SHEET NO. 2T18 OF 21 SHEETS

ORIGINAL PLAN			
	SURVEY PLOTTED BY		DATE
	DRAWN BY	P. R. E. HITT	10/94
NOTE BOOK	TRACED BY		
	DESIGNED BY	L. Y. NELSON	10/94
	QUANTITIES BY		
No.	CHECKED BY		

P:\H3\CONT.75\UNIT-III\EXP-TUN\H3-2T19.DWG

FED. ROAD DIST. NO.	STATE	FED. AID PROJ. NO.	FISCAL YEAR	SHEET NO.	TOTAL SHEETS
HAWAII	HAW.	I-H3-1(75) UNIT III	1994	121	353

XREF LIST:
ETI-BRDR
SCALE24

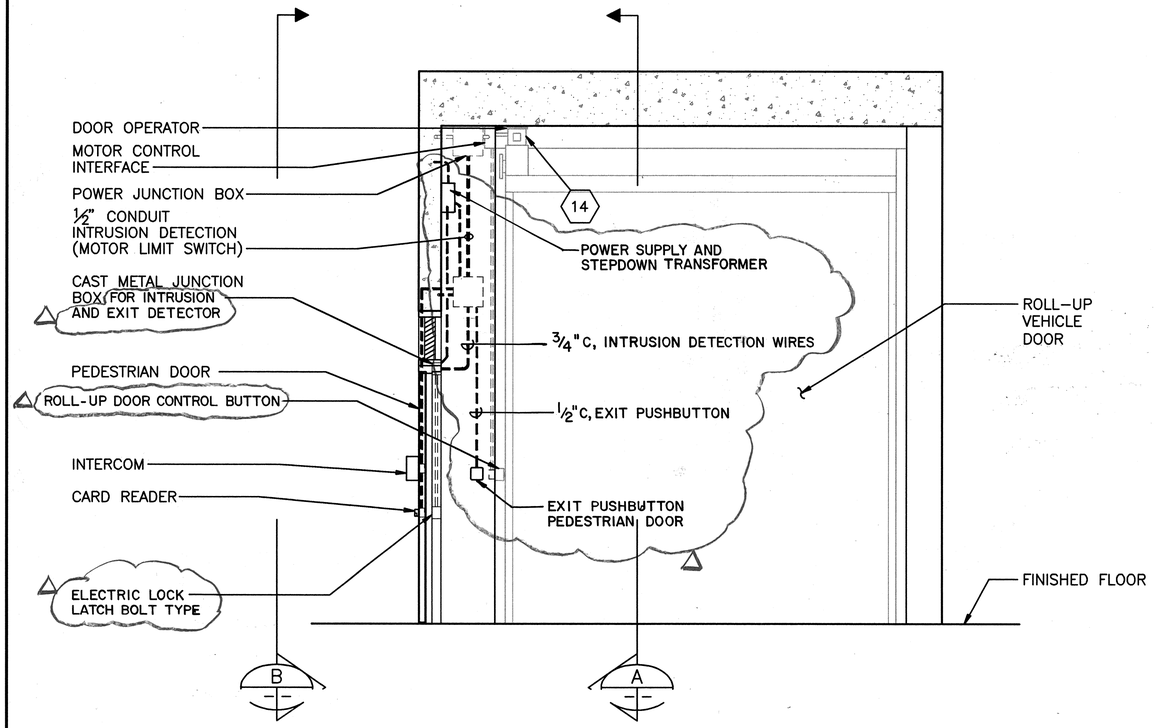

CARD KEY ACCESS DETAIL (1)

SCALE: ½" = 1'-0"

2T10 2T19

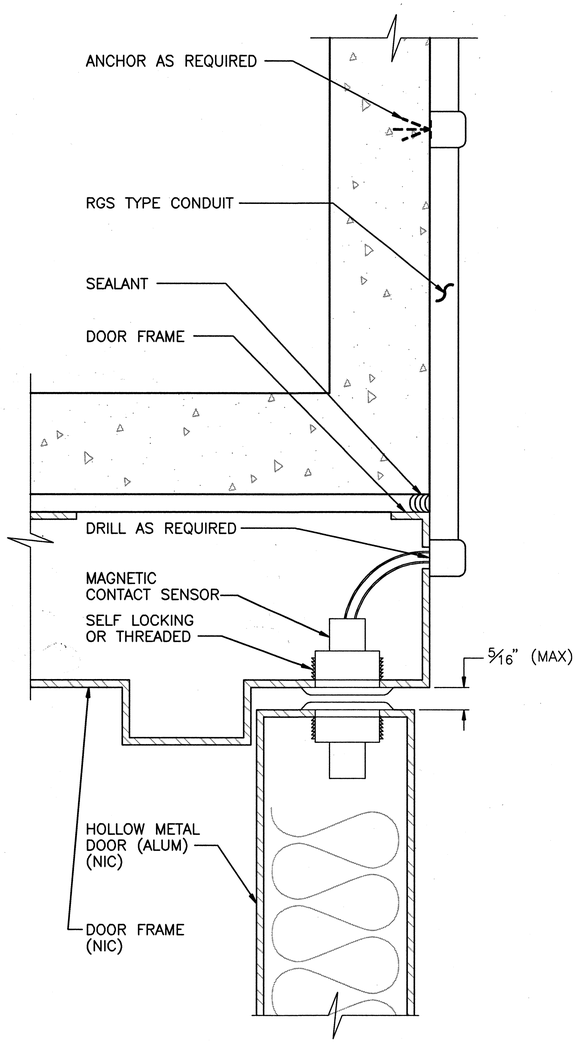

MAGNETIC DOOR CONTACT (2)

(TYPICAL)

2T19

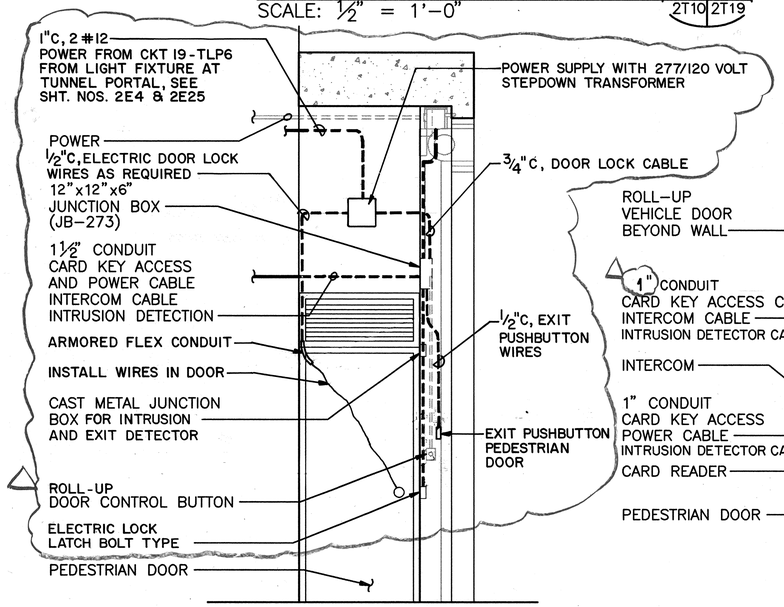

ELEVATION (A)

SCALE: ½" = 1'-0"

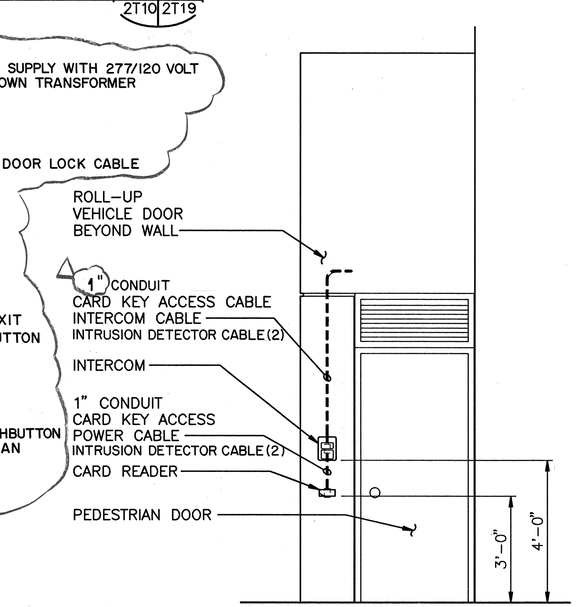

ELEVATION (B)

SCALE: ½" = 1'-0"

NOTES:
1. SEE SHEET NO. 3T7 FOR INTRUSION ALARM SYSTEM TYPICAL WIRING DIAGRAM.

GRAPHIC SCALE:
2' 1' 0' 2' 4'
½" = 1'-0"

STANLEY M.O.T. CHING
LICENSED PROFESSIONAL ENGINEER
No. 6312-C
HAWAII, U.S.A.

THIS WORK WAS PREPARED BY ME OR UNDER MY SUPERVISION

Stanley M.O.T. Ching

DATE	REVISION
5/29/97	DCN 75-019: ADDED ELECTRIC DOOR LOCK WIRING

STATE OF HAWAII
DEPARTMENT OF TRANSPORTATION
HIGHWAYS DIVISION

MISCELLANEOUS DETAILS – 5

SYSTEMS

EXPLORATORY TUNNEL IMPROVEMENTS
H-3 FINISH (UNIT III)
FAIP NO. I-H3-1(75), UNIT III
T.K. TUNNEL/ACCESS ROADS

SCALE: AS NOTED DATE: JUN 1995

SHEET NO. 2T19 OF 21 SHEETS

ORIGINAL PLAN
NOTE BOOK No.
SURVEY PLOTTED BY
DRAWN BY P. R. E. HITT 10/94
TRACED BY
DESIGNED BY B. H. NARIMATSU 10/94
QUANTITIES BY
CHECKED BY

P:\H3\CONT.75\UNIT-III\EXP-TUN\H3-2T20.DWG

C.O. 121

FED. ROAD DIST. NO.	STATE	FED. AID PROJ. NO.	FISCAL YEAR	SHEET NO.	TOTAL SHEETS
HAWAII	HAW.	I-H3-1(75) UNIT III	1994	122	353

XREF LIST:
ETI-BRDR
SCALE24

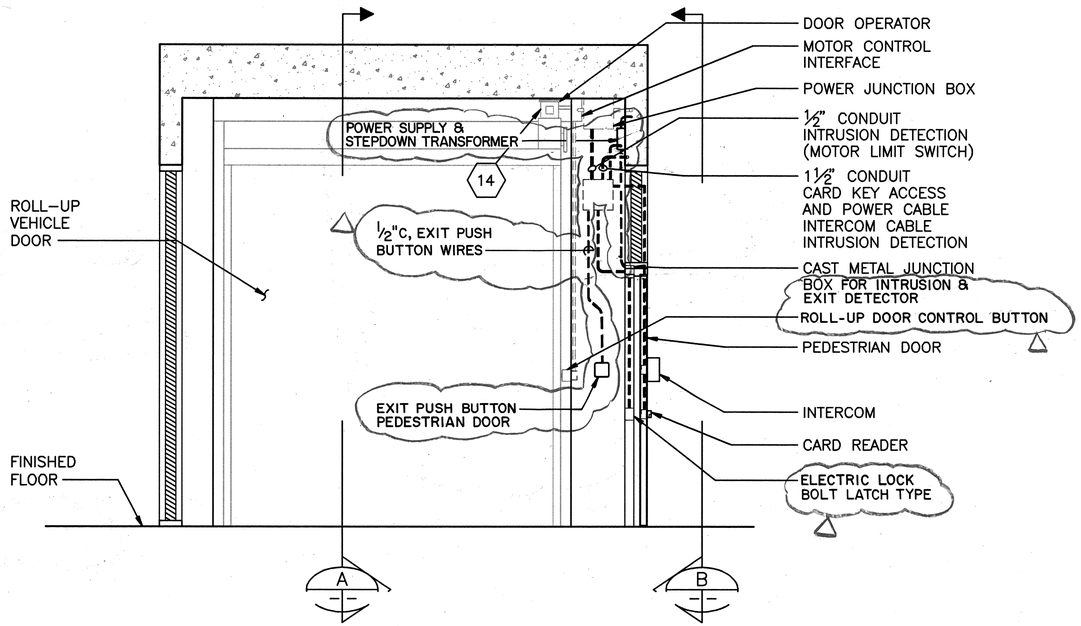

CARD KEY ACCESS DETAIL (1)
SCALE: ½" = 1'-0"
2T11 | 2T20

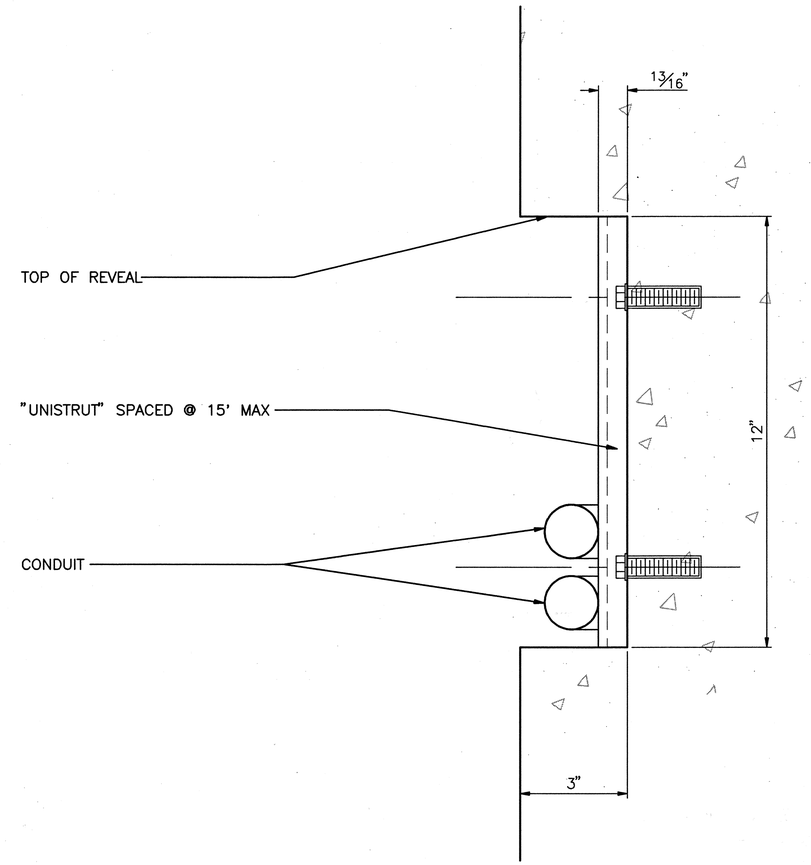

SECTION @ REVEAL (2)
SCALE: 6" = 1'-0"
2T12 | 2T20

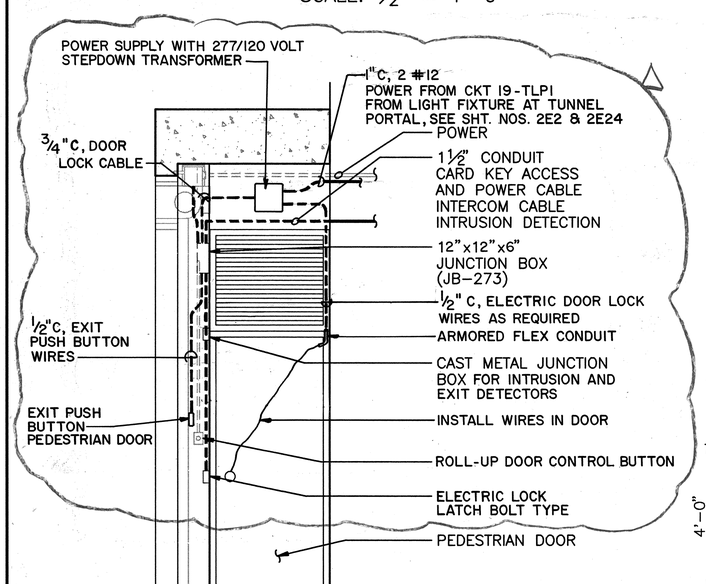

ELEVATION (A)
SCALE: ½" = 1'-0"

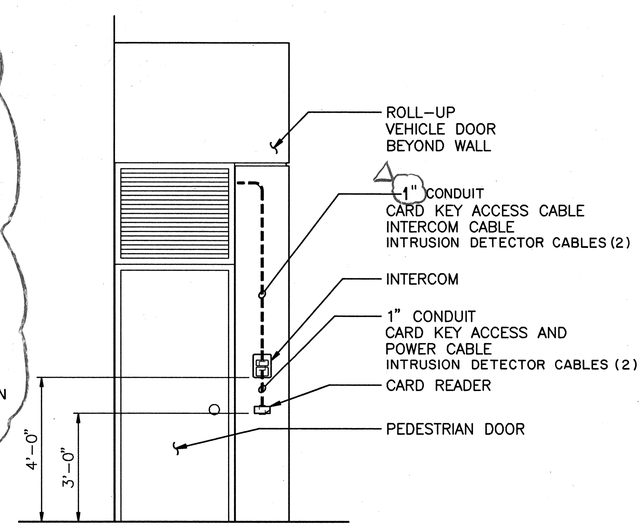

ELEVATION (B)
SCALE: ½" = 1'-0"

NOTES:
1. SEE SHEET NO. 3T7 FOR INTRUSION ALARM SYSTEM TYPICAL WIRING DIAGRAM.

GRAPHIC SCALE:
2" 1" 0" 2" 4"
6" = 1'-0"

GRAPHIC SCALE:
2' 1' 0' 2' 4'
½" = 1'-0"

STANLEY M.O.T. CHING
LICENSED PROFESSIONAL ENGINEER
No. 6312-C
HAWAII, U.S.A.

THIS WORK WAS PREPARED BY ME OR UNDER MY SUPERVISION
Stanley M.O.T. Ching

DATE	REVISION
5/29/97	DCN 75-019: ADDED ELECTRIC DOOR LOCK WIRING

STATE OF HAWAII
DEPARTMENT OF TRANSPORTATION
HIGHWAYS DIVISION

MISCELLANEOUS DETAILS – 6
SYSTEMS
EXPLORATORY TUNNEL IMPROVEMENTS
H-3 FINISH (UNIT III)
FAIP NO. I-H3-1(75), UNIT III
T.K. TUNNEL/ACCESS ROADS
SCALE: ½" = 1'-0" DATE: JUN 1995

SHEET NO. 2T20 OF 21 SHEETS

ORIGINAL PLAN	SURVEY PLOTTED BY	DATE
	DRAWN BY P. R. E. HITT	10/94
NOTE BOOK	TRACED BY	
	DESIGNED BY B. H. NARIMATSU	10/94
No.	QUANTITIES BY	
	CHECKED BY	

P:\H3\CONT.75\UNIT-III\EXP-TUN\H3-2T21.DWG

C.O. 122

FED. ROAD DIST. NO.	STATE	FED. AID PROJ. NO.	FISCAL YEAR	SHEET NO.	TOTAL SHEETS
HAWAII	HAW.	I-H3-1(75) UNIT III	1994	123	353

XREF LIST:
ETI-BRDR
SCALE2

NOTES:

1. MAINTAIN THE SAME DISTANCE SPACING BETWEEN THE TWO WIRES. PULL APPROXIMATELY 50 LBS. TENSION ON BOTH WIRES WHEN INSTALLING. ALLOW FOR TUNNEL EXPANSION/CONTRACTION BY PROVIDING PERIODIC LOOPS AS SHOWN IN SECTION A. PLACE LOOPS EVERY 200' TO 250' APART. MAKE LOOPS ON BOTH WIRES THE SAME SO SPACING IS CONSTANT.
2. WHEN CLAMPING WIRES TO SPACERS, USE ONLY PLASTIC TIE-WRAPS, 7½" LONG BY 0.2" WIDE. TIGHTEN ENOUGH TO PREVENT SLIPPING. WHEN INSTALLING ANTENNA CABLE, CLAMP SMALL 4" LONG BY 0.15" WIDE TIE-WRAPS DIRECTLY TO WIRE (AS SHOWN IN SECTION A) EVERY 4TH OR 5TH SPACER TO PREVENT SLIPPING. USE THESE SMALL TIE-WRAPS IN THIS MANNER AT THE ENDS OF RADIATOR.
3. MATERIAL: SEE SPECIAL PROVISIONS FOR MATERIALS AND WIRE SIZE.
4. COORDINATE ANTENNA ROUTING WITH OTHER CEILING MOUNTED EQUIPMENT.

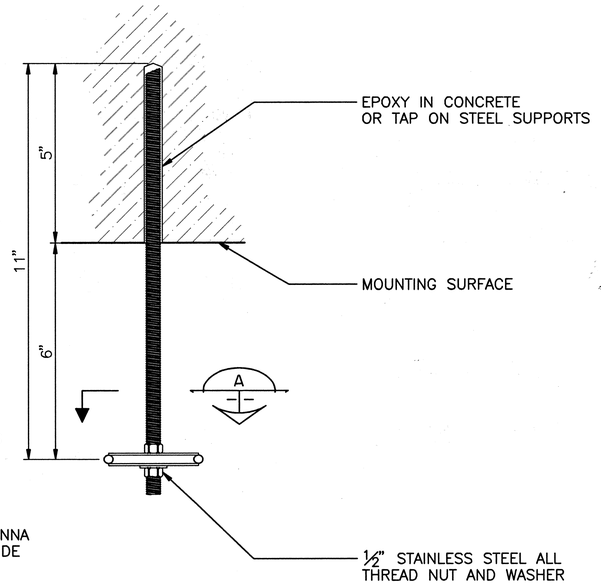

DETAIL – TWIN-LEAD RADIATOR SUPPORT BRACKET
SCALE: 6" = 1'-0"
1 / 2T21

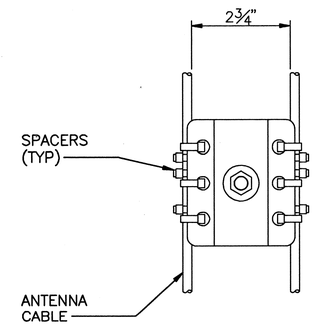

SECTION – TWIN-LEAD RADIATOR ATTACHMENT
SCALE: 6" = 1'-0"
A

GRAPHIC SCALE:
2" 1" 0" 2" 4"
6" = 1'-0"

STANLEY M.O.T. CHUNG
LICENSED PROFESSIONAL ENGINEER
No. 6312-C
HAWAII, U.S.A.

THIS WORK WAS PREPARED BY ME OR UNDER MY SUPERVISION
Stanley M.O.T. Chung

DATE	REVISION

STATE OF HAWAII
DEPARTMENT OF TRANSPORTATION
HIGHWAYS DIVISION

MISCELLANEOUS DETAILS – 7
SYSTEMS
EXPLORATORY TUNNEL IMPROVEMENTS
H-3 FINISH (UNIT III)
FAIP NO. I-H3-1(75), UNIT III
T.K. TUNNEL/ACCESS ROADS
SCALE: 6" = 1'-0" DATE: JUN 1995

SHEET NO. 2T21 OF 21 SHEETS

ORIGINAL PLAN
NOTE BOOK
No.
SURVEY PLOTTED BY
DRAWN BY P. R. E. HITT DATE 10/94
TRACED BY
DESIGNED BY P. L. FORDYCE 10/94
QUANTITIES BY
CHECKED BY

P:\H3\CONT.75\UNIT-III\EXP-TUN\H3-2T22.DWG