FED. ROAD DIST. NO.	STATE	FED. AID PROJ. NO.	FISCAL YEAR	SHEET NO.	TOTAL SHEETS
HAWAII	HAW.	I-H3-1(75) UNIT III	1994	269	353

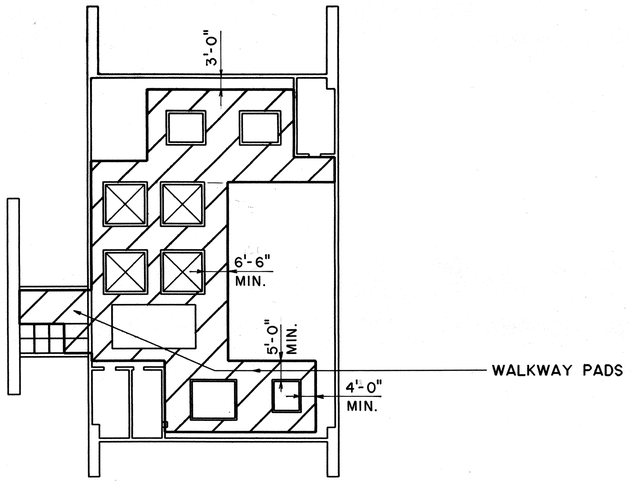

HAIKU INBOUND ROOF PLAN

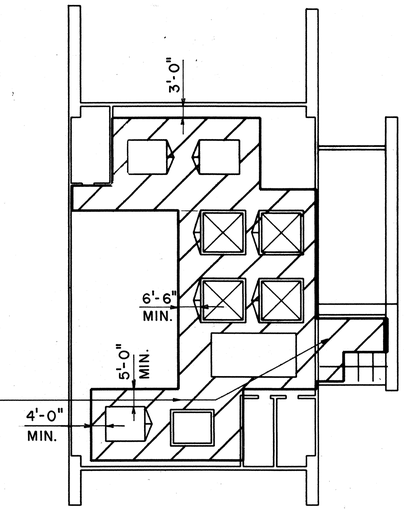

HAIKU OUTBOUND ROOF PLAN

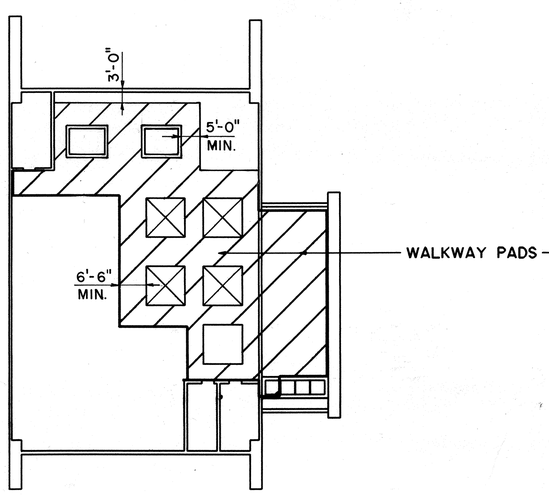

HALAWA INBOUND ROOF PLAN

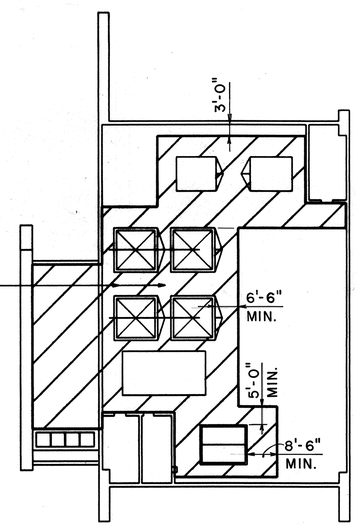

HALAWA OUTBOUND ROOF PLAN

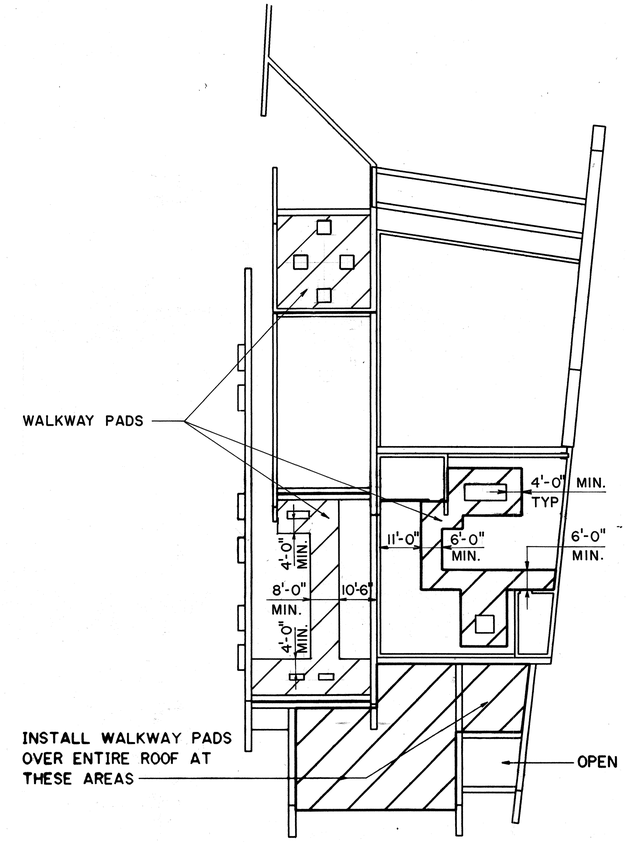

CONTROL BUILDING/TRAFFIC OPERATIONS CENTER

NOTES:

1. INSTALL WALKWAY PADS WITH A MINIMUM WIDTH OF WALKWAY OF 4'.
2. INSTALL AREAS OF WALKWAY PADS WITH WIDTHS GREATER THAN 4', AS SHOWN.

LEGEND

WALKWAY PAD

FOR DETAIL AS-BUILT INFORMATION REFER TO CONSTRUCTION SUBMITTALS

DATE	REVISION
10/13/95	ADDENDUM 1

ROBERT HOWELL LICENSED PROFESSIONAL ARCHITECT No. 6697 HAWAII, U.S.A.

THIS WORK WAS PREPARED BY ME OR UNDER MY SUPERVISION

Robert Howell

STATE OF HAWAII
DEPARTMENT OF TRANSPORTATION
HIGHWAYS DIVISION

ROOF WALKWAYS

COMMON WORK

H-3 FINISH (UNIT III)
FAIP NO. I-H3-1(75), UNIT III
T.K. TUNNEL/ACCESS ROADS

SCALE: 1" = 20' DATE: JUN 1995

SHEET NO. 7A1 OF 5 SHEETS

ADD. 269

ORIGINAL PLAN		DATE
	SURVEY PLOTTED BY	
	DRAWN BY B. BUNYI	" NOV 94
NOTE BOOK	TRACED BY	"
	DESIGNED BY C. TREY	NOV 94
	QUANTITIES BY	"
NO.	CHECKED BY B. HOWELL	" DEC 94

BUNYI ELWOOD:12410:DWG.ARCH3AR029.FB871 02FEB95-08.20.10

FED. ROAD DIST. NO.	STATE	FED. AID PROJ. NO.	FISCAL YEAR	SHEET NO.	TOTAL SHEETS
HAWAII	HAW.	I-H3-1(75) UNIT III	1994	270	353

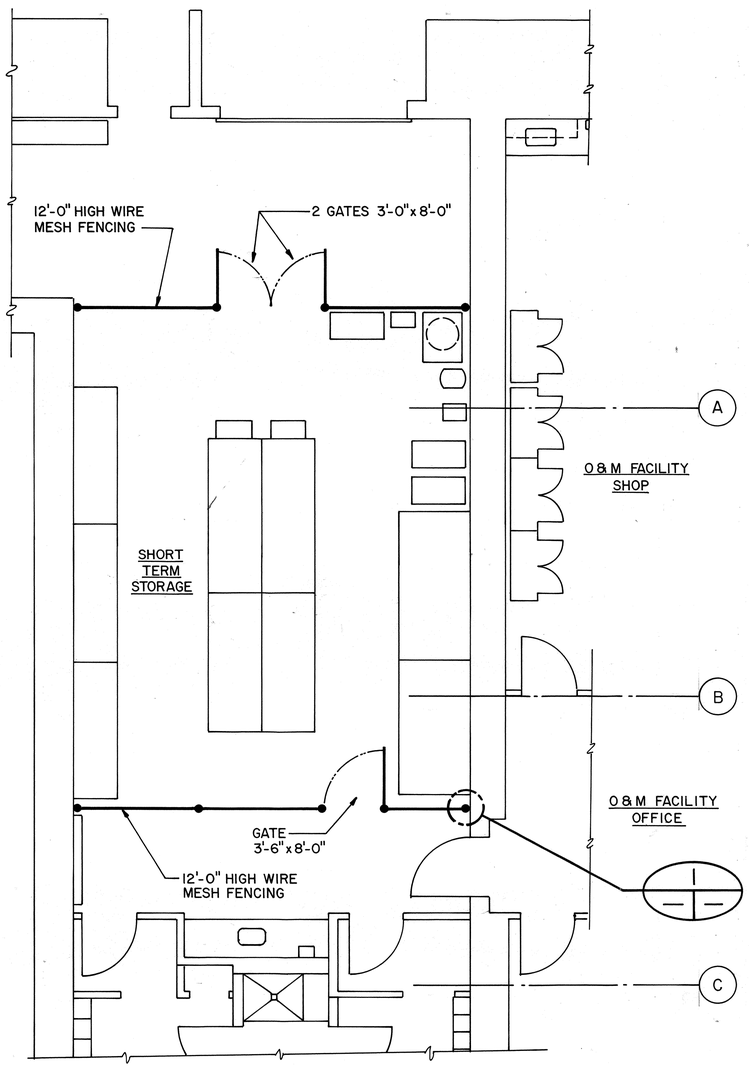

HAIKU OB PORTAL BUILDING
LEVEL A PARTIAL PLAN
SCALE: 1/4"=1'-0"

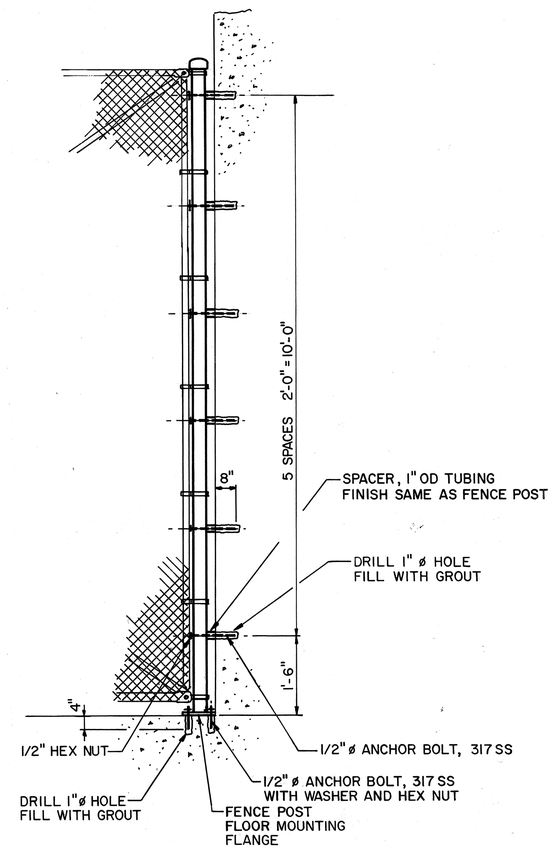

DETAIL
NO SCALE

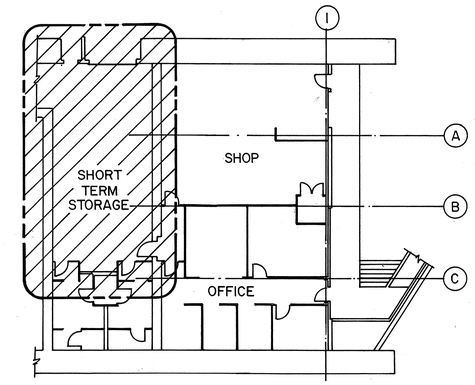

KEY PLAN
HAIKU OB PORTAL BUILDING
LEVEL A

GRAPHIC SCALE
1' 0 1' 3' 5' 10'
1/4"=1'-0"

ROBERT HOWELL
LICENSED PROFESSIONAL ARCHITECT
No. 6697
HAWAII, U.S.A.

THIS WORK WAS PREPARED BY ME OR UNDER MY SUPERVISION
Robert Howell

DATE	REVISION

STATE OF HAWAII
DEPARTMENT OF TRANSPORTATION
HIGHWAYS DIVISION

STORAGE ROOM SECURITY FENCE

COMMON WORK

H-3 FINISH (UNIT III)
FAIP NO. I-H3-1(75), UNIT III
T.K. TUNNEL/ACCESS ROADS

SCALE: AS NOTED DATE: JUN 1995

SHEET NO. 7A2 OF 5 SHEETS

ORIGINAL PLAN		DATE
	SURVEY PLOTTED BY	
	SURVEY BY	
	TRACED BY D. DRYDEN	MAY 95
NOTE BOOK	DESIGNED BY D. DRYDEN	MAY 95
	QUANTITIES BY	
No.	CHECKED BY R. HOWELL	MAY 95

FED. ROAD DIST. NO.	STATE	FED. AID PROJ. NO.	FISCAL YEAR	SHEET NO.	TOTAL SHEETS
HAWAII	HAW.	I-H3-1(75) UNIT III	1994	271	353

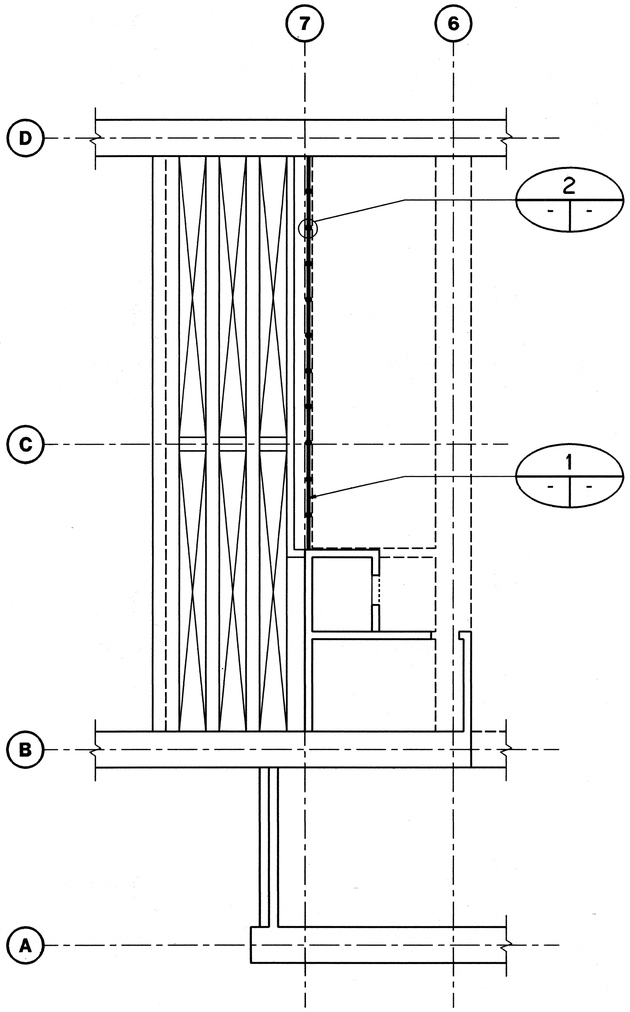

HALAWA IB PORTAL BUILDING

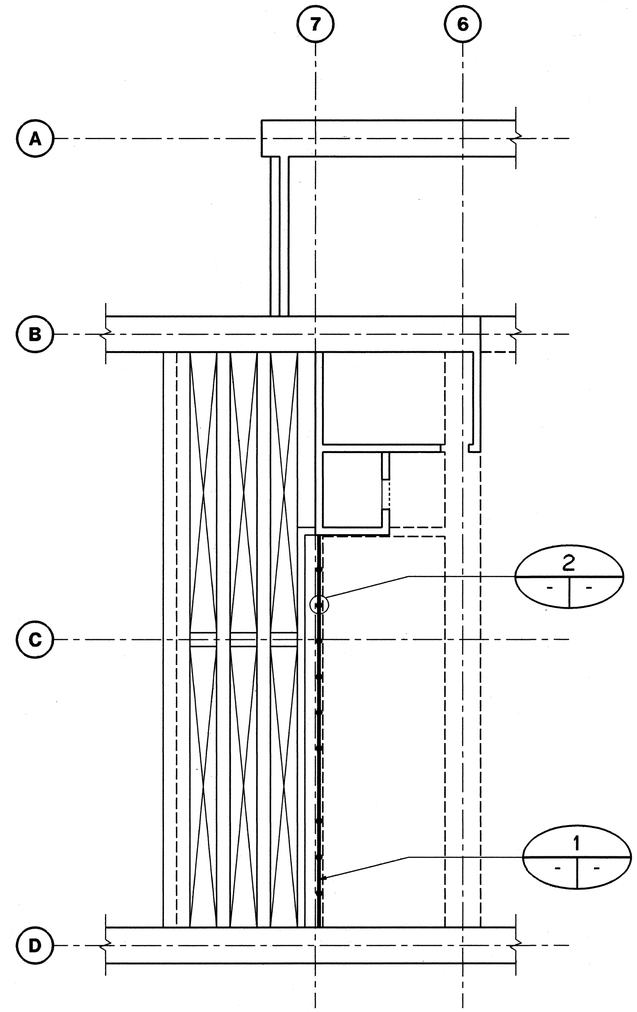

HALAWA OB PORTAL BUILDING

LEVEL 3 PLANS
SCALE: ⅛"=1'-0"

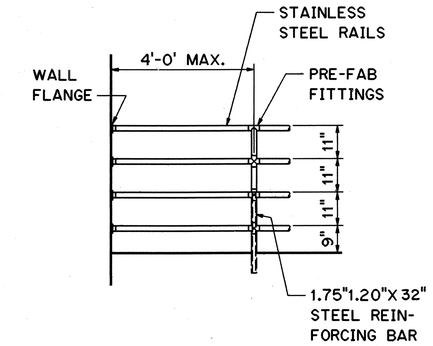

TYPICAL RAIL (1)
SCALE: ½"=1'-0"

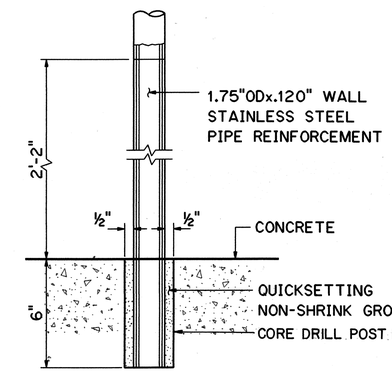

TYPICAL POST (2)
SCALE: ½:=1'-0"

10/13/95	ADDENDUM 1
DATE	REVISION

STATE OF HAWAII
DEPARTMENT OF TRANSPORTATION
HIGHWAYS DIVISION

RAILINGS AND DETAILS-1

COMMOM WORK
H-3 FINISH (UNIT III)
FAIP NO. I-H3-1(75), UNIT III
T.K. TUNNEL/ACCESS ROADS

SCALE: NONE DATE: JUN 1995

SHEET NO. 7A3 OF 5 SHEETS

GRAPHIC SCALE
8' 4' 0' 8' 16'
⅛" = 1'-0"

ROBERT HOWELL
LICENSED PROFESSIONAL ARCHITECT
No. 6597
HAWAII, U.S.A.

THIS WORK WAS PREPARED BY ME OR UNDER MY SUPERVISION
Robert Howell

ORIGINAL PLAN	SURVEY PLOTTED BY / DRAWN BY / TRACED BY / DESIGNED BY / QUANTITIES BY / CHECKED BY / DATE
NOTE BOOK	
NO.	

HERNANDEZ ELWOOD:::2410:DWG.ARCHJAR051.FOB71 07JUN95-11.31.10

ADD. 271

FED. ROAD DIST. NO.	STATE	FED. AID PROJ. NO.	FISCAL YEAR	SHEET NO.	TOTAL SHEETS
HAWAII	HAW.	I-H3-1(75) UNIT III	1994	272	353

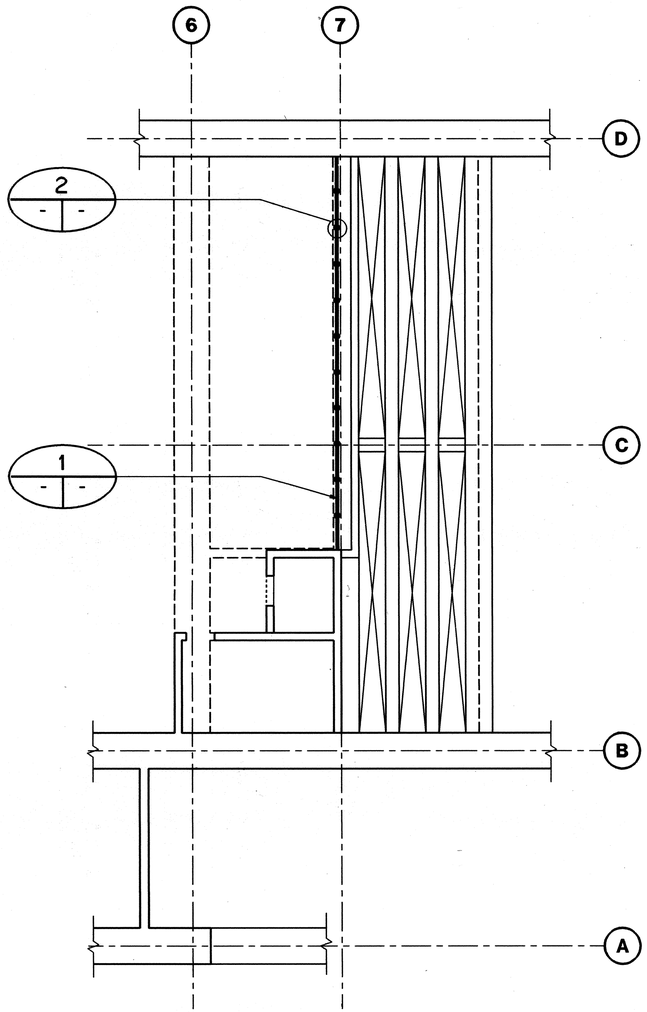

HAIKU IB PORTAL BUILDING

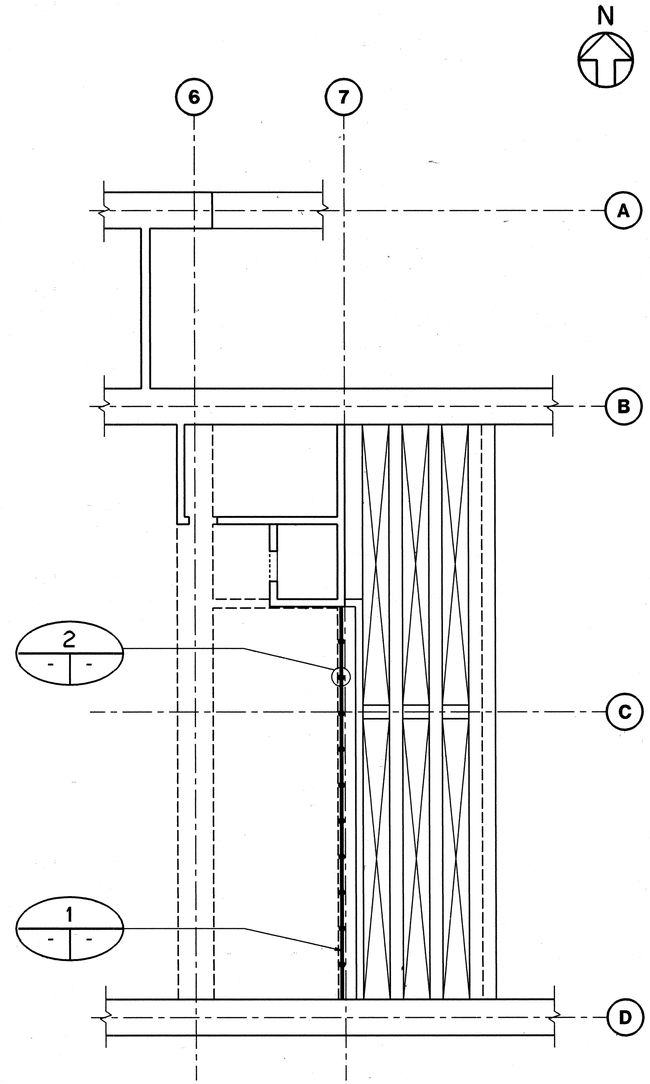

HAIKU OB PORTAL BUILDING

LEVEL 3 PLANS
SCALE: ⅛"=1'-0"

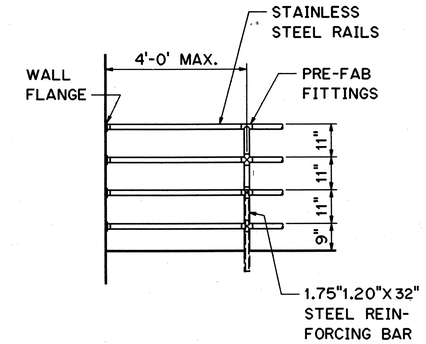

TYPICAL RAIL (1)
SCALE: ½"=1'-0"

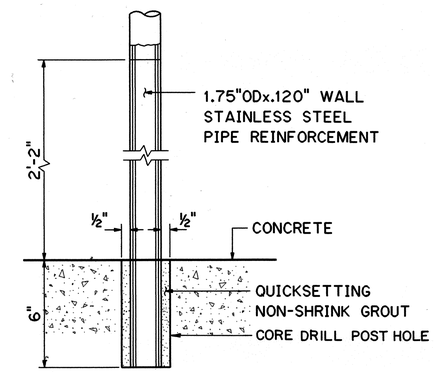

TYPICAL POST (2 / 7A5 | 7A4)
SCALE: ½:=1'-0"

DATE	REVISION
10/13/95	ADDENDUM 1

STATE OF HAWAII
DEPARTMENT OF TRANSPORTATION
HIGHWAYS DIVISION

RAILINGS AND DETAILS-2

COMMOM WORK
H-3 FINISH (UNIT III)
FAIP NO. I-H3-1(75), UNIT III
T.K. TUNNEL/ACCESS ROADS

SCALE: NONE DATE: JUN 1995

SHEET NO. 7A4 OF 5 SHEETS

GRAPHIC SCALE
8' 4' 0' 8' 16'
⅛" = 1'-0"

ROBERT HOWELL
LICENSED PROFESSIONAL ARCHITECT
No. 6697
HAWAII, U.S.A.

THIS WORK WAS PREPARED BY ME OR UNDER MY SUPERVISION
Robert Howell

ORIGINAL PLAN
SURVEY PLOTTED BY
DRAWN BY
TRACED BY
DESIGNED BY
QUANTITIES BY
CHECKED BY
DATE
NOTE BOOK
NO.

HERNANDEZ ELWOODIII:241OTLDWG.ARCHJAN032.PGB71 07JUN95-13:54:10

ADD. 272

FED. ROAD DIST. NO.	STATE	FED. AID PROJ. NO.	FISCAL YEAR	SHEET NO.	TOTAL SHEETS
HAWAII	HAW.	I-H3-1(75) UNIT III	1994	273	353

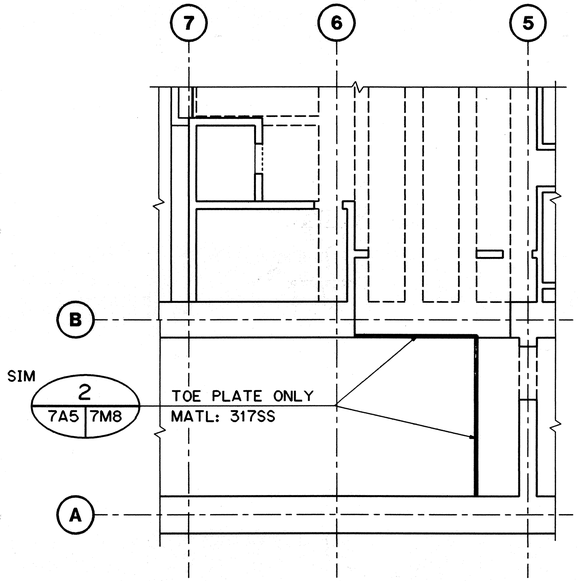

HALAWA IB PORTAL BUILDING

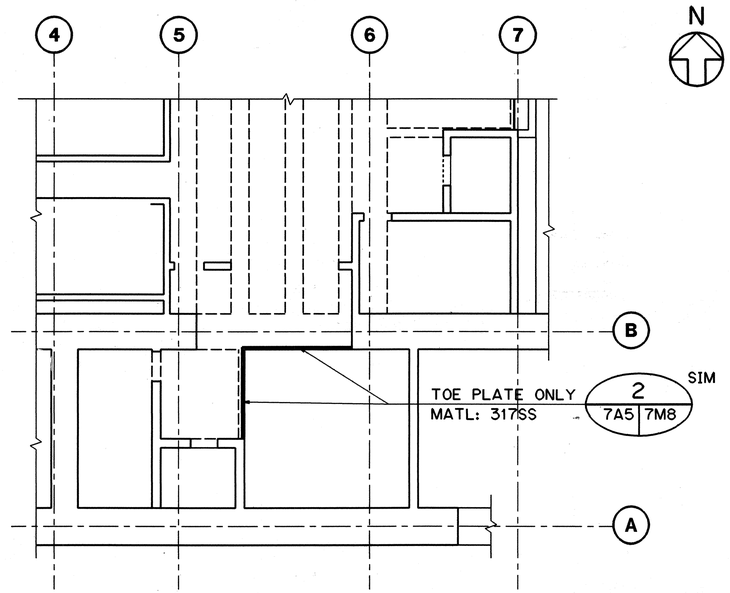

HAIKU IB PORTAL BUILDING

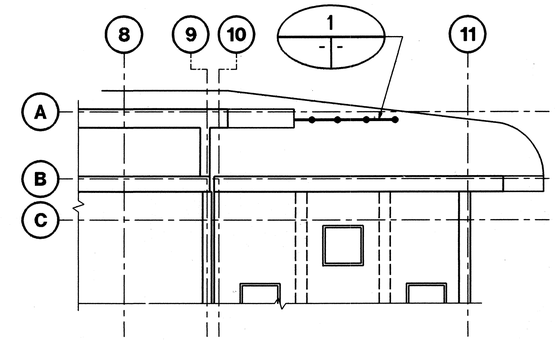

CONTROL BUILDING

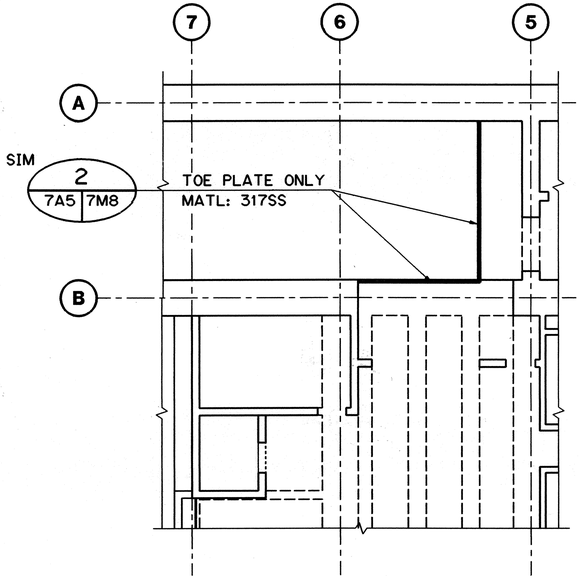

HALAWA OB PORTAL BUILDING

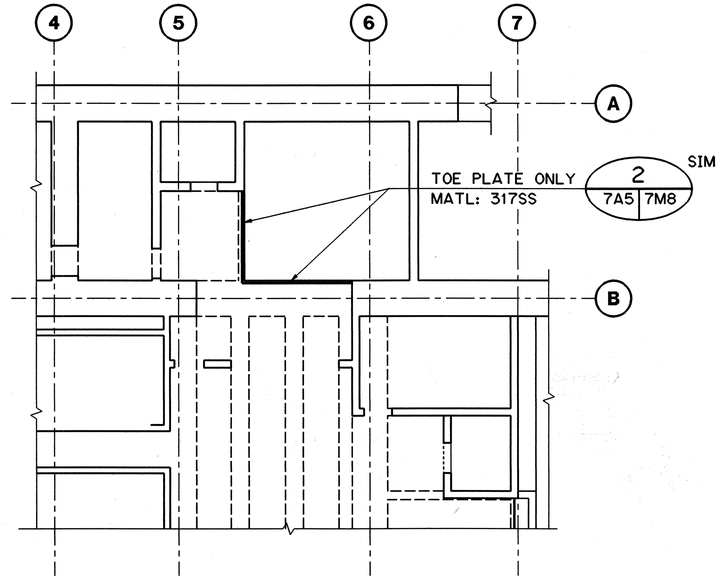

HAIKU OB PORTAL BUILDING

LEVEL 2 PLANS
SCALE: ⅛"=1'-0"

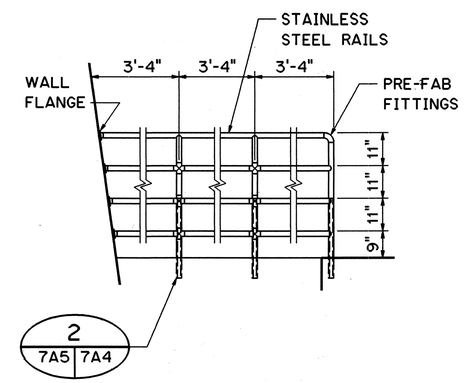

ELEVATION-RAILING 1 - -
SCALE: ½"=1'-0"

GRAPHIC SCALE
8' 4' 0' 8' 16'
⅛" = 1'-0"

ROBERT HOWELL
LICENSED PROFESSIONAL ARCHITECT
No. 6697
HAWAII, U.S.A.

THIS WORK WAS PREPARED BY ME OR UNDER MY SUPERVISION

Robert Howell

DATE	REVISION
10/13/95	ADDENDUM 1

STATE OF HAWAII
DEPARTMENT OF TRANSPORTATION
HIGHWAYS DIVISION

RAILINGS AND DETAILS-3

COMMOM WORK
H-3 FINISH (UNIT III)
FAIP NO. I-H3-1(75), UNIT III
T.K. TUNNEL/ACCESS ROADS

SCALE: NONE DATE: JUN 1995

SHEET NO. 7A5 OF 5 SHEETS

ADD. 273

ORIGINAL PLAN	SURVEY PLOTTED BY	DATE
	DRAWN BY	
NOTE BOOK	TRACED BY	
	DESIGNED BY	
NO.	QUANTITIES BY	
	CHECKED BY	

HERNANDEZ ELWOOD:T:2410:DWG.ARCH:AR033.FGB71 07JUN95-13:30:10

FED. ROAD DIST. NO.	STATE	FED. AID PROJ. NO.	FISCAL YEAR	SHEET NO.	TOTAL SHEETS
HAWAII	HAW.	I-H3-I(75) UNIT III	1994	274	353

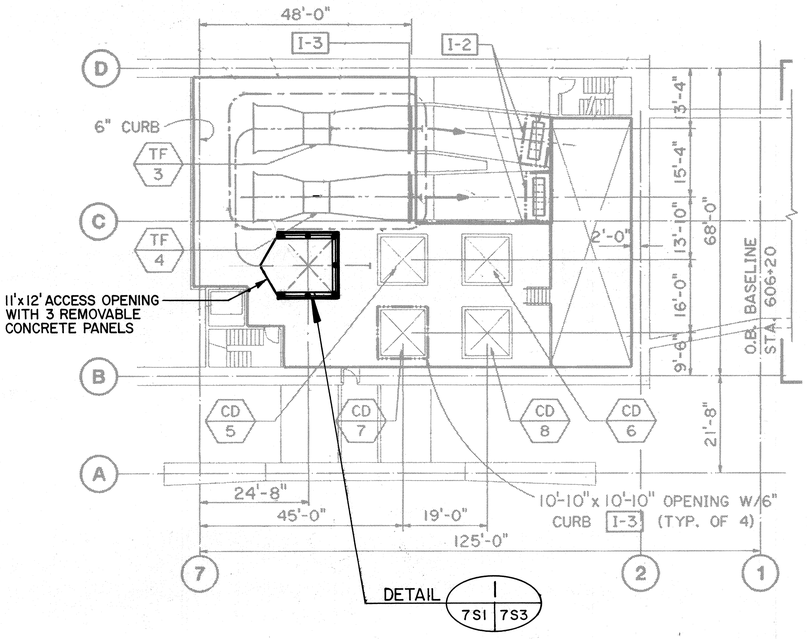

LEVEL 3 PLAN
HALAWA IB PORTAL BUILDING

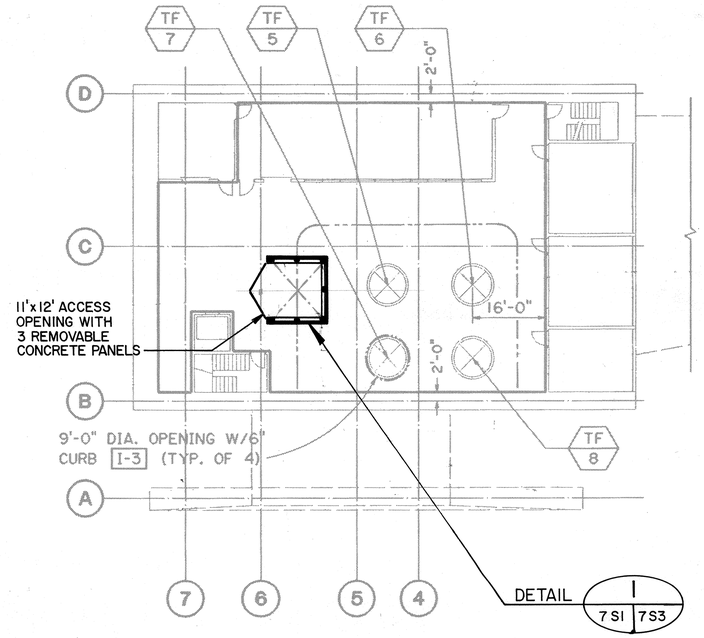

LEVEL 4 PLAN
HALAWA IB PORTAL BUILDING

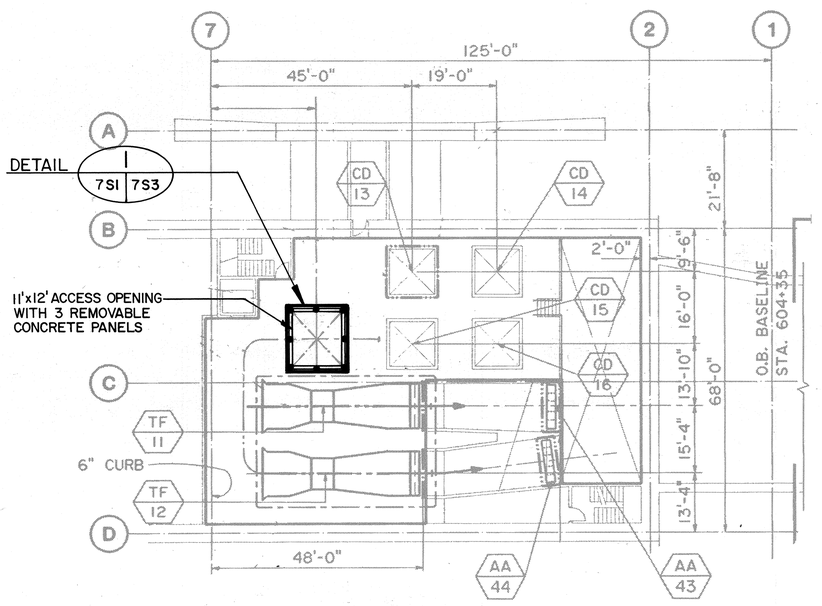

LEVEL 3 PLAN
HALAWA OB PORTAL BUILDING

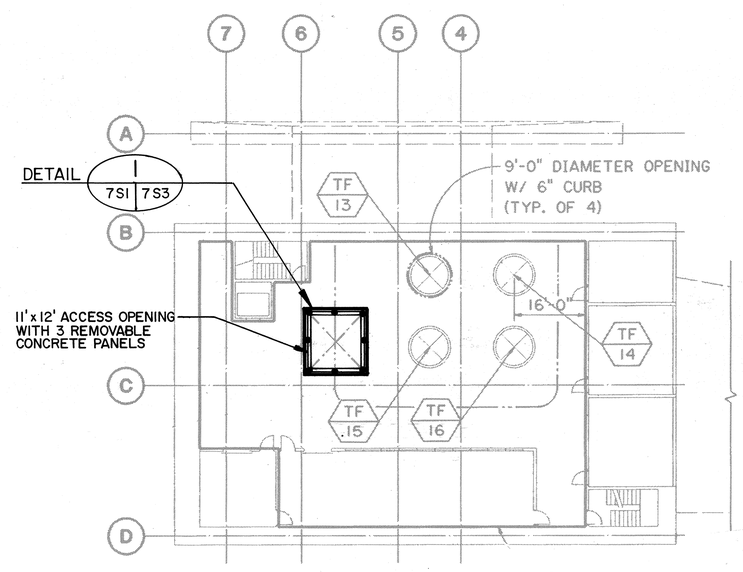

LEVEL 4 PLAN
HALAWA OB PORTAL BUILDING

FOR DETAIL AS-BUILT INFORMATION REFER TO CONSTRUCTION SUBMITTALS

DATE	REVISION

STATE OF HAWAII
DEPARTMENT OF TRANSPORTATION
HIGHWAYS DIVISION

ACCESS OPENING SAFETY RAILING — HALAWA

COMMON WORK

H-3 FINISH (UNIT III)
FAIP NO. I-H3-I(75), UNIT III
T.K. TUNNEL/ACCESS ROADS

SCALE: NONE DATE: JUN 1995

SHEET NO. 7SI OF 6 SHEETS

PETER G. BIBBES LICENSED PROFESSIONAL ENGINEER No. 6467-S HAWAII, U.S.A.

THIS WORK WAS PREPARED BY ME OR UNDER MY SUPERVISION

ORIGINAL PLAN		DATE
	SURVEY PLOTTED BY	
	DRAWN BY D. E. DRYDEN	OCT 94
NOTE BOOK	TRACED BY	
	DESIGNED BY D. E. DRYDEN	OCT 94
	QUANTITIES BY	
No.	CHECKED BY P. G. BIBBES	JAN 95

FED. ROAD DIST. NO.	STATE	FED. AID PROJ. NO.	FISCAL YEAR	SHEET NO.	TOTAL SHEETS
HAWAII	HAW.	I-H3-1(75) UNIT III	1994	275	353

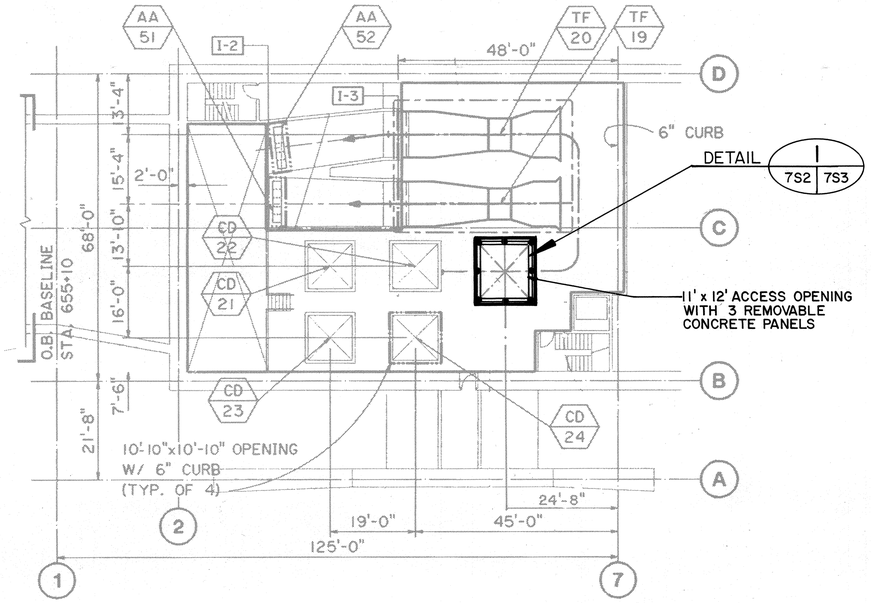

LEVEL 3 PLAN
HAIKU IB PORTAL BUILDING

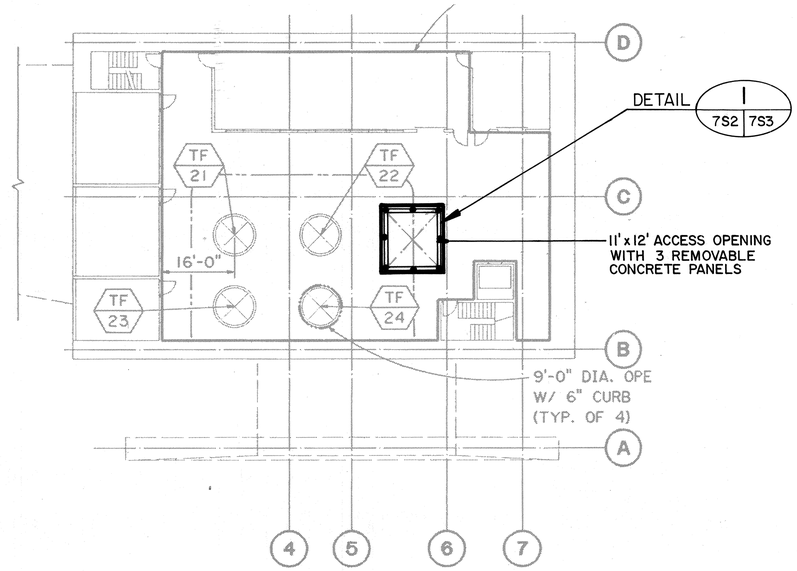

LEVEL 4 PLAN
HAIKU IB PORTAL BUILDING

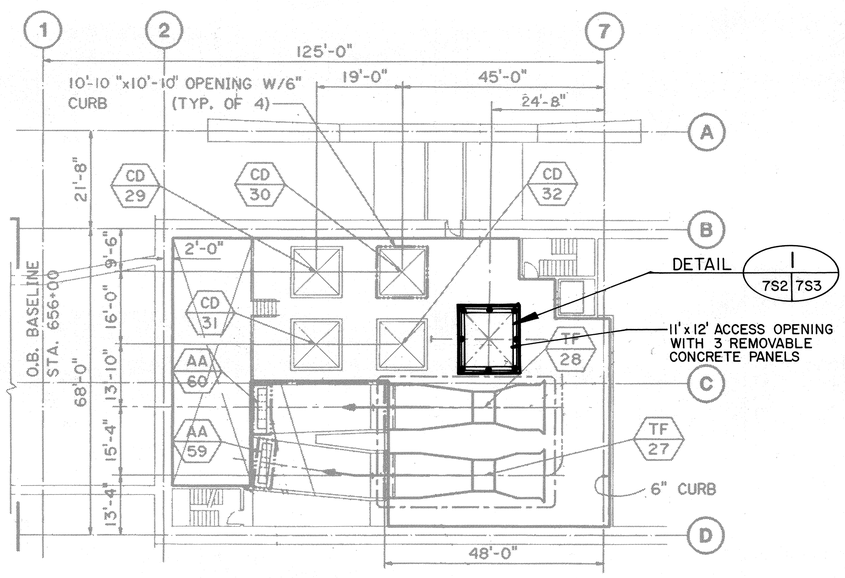

LEVEL 3 PLAN
HAIKU OB PORTAL BUILDING

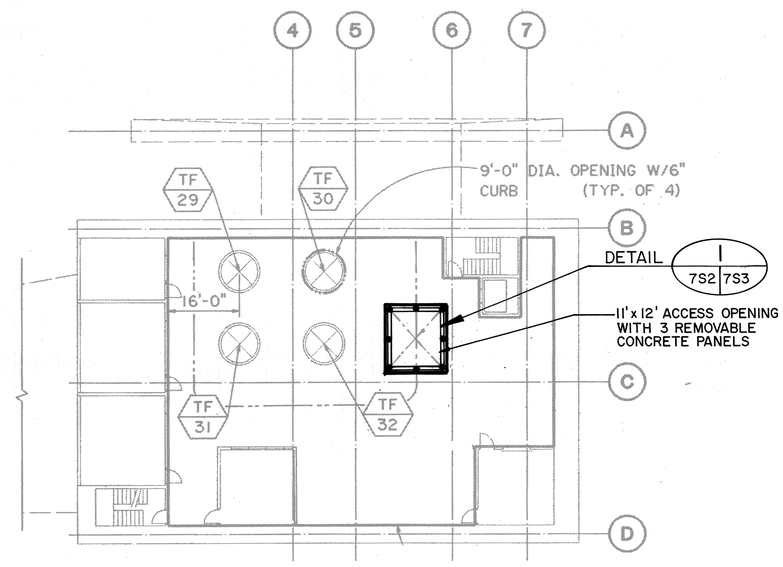

LEVEL 4 PLAN
HAIKU OB PORTAL BUILDING

ORIGINAL PLAN		DATE
	SURVEY PLOTTED BY	
	DRAWN BY D. E. DRYDEN	OCT 94
	TRACED BY	
	DESIGNED BY D. E. DRYDEN	OCT 94
NOTE BOOK	QUANTITIES BY	
	CHECKED BY P. G. BIBBES	JAN 95
No.		

PETER G. BIBBES
LICENSED PROFESSIONAL ENGINEER
No. 6467-S
HAWAII, U.S.A.

THIS WORK WAS PREPARED BY ME OR UNDER MY SUPERVISION

DATE	REVISION

STATE OF HAWAII
DEPARTMENT OF TRANSPORTATION
HIGHWAYS DIVISION

ACCESS OPENING SAFETY RAILING — HAIKU

COMMON WORK

H-3 FINISH (UNIT III)
FAIP NO. I-H3-1(75), UNIT III
T.K. TUNNEL/ACCESS ROADS

SCALE: NONE DATE: JUN 1995

SHEET NO. 7S2 OF 6 SHEETS

FED. ROAD DIST. NO.	STATE	FED. AID PROJ. NO.	FISCAL YEAR	SHEET NO.	TOTAL SHEETS
HAWAII	HAW.	I-H3-1(75) UNIT III	1994	276	353

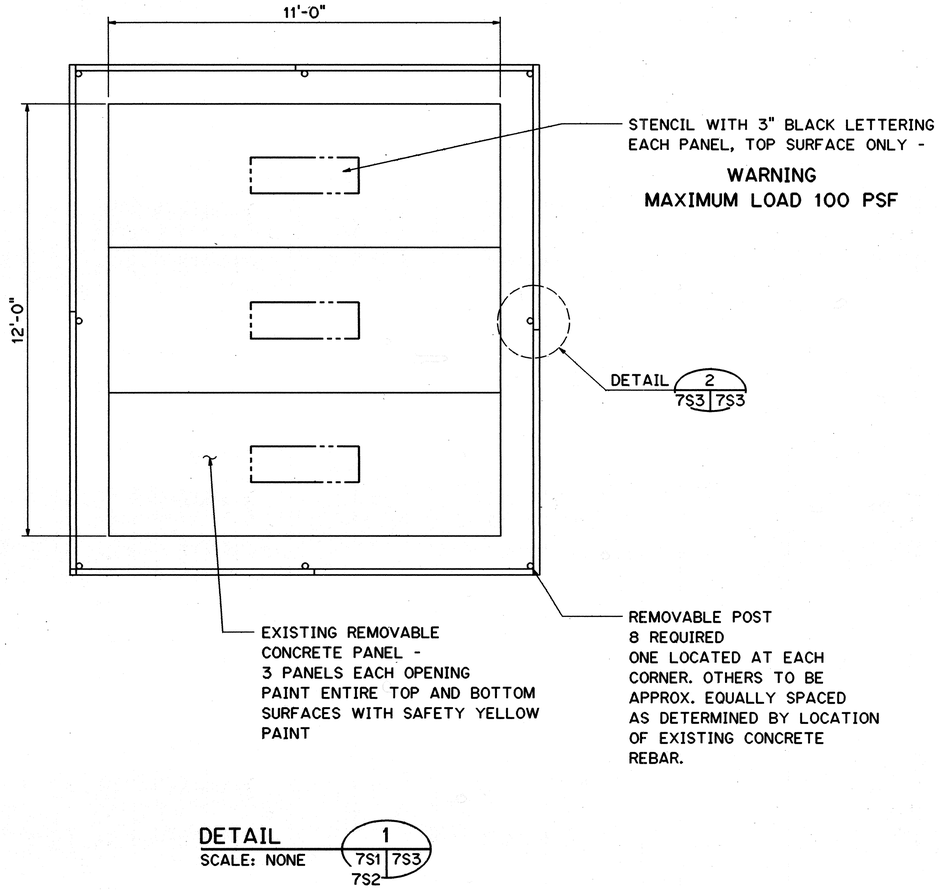

DETAIL 1
SCALE: NONE
7S1 7S3 7S2

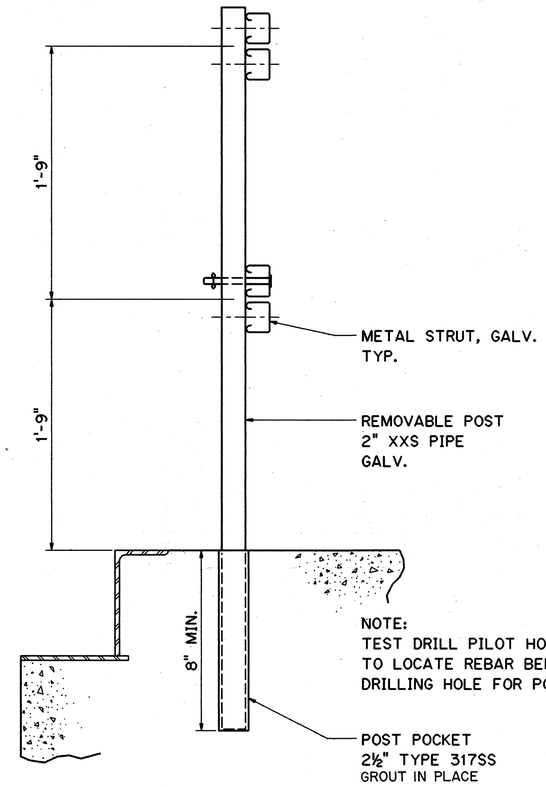

PILOT HOLES DRILLED AND NOT USED AS GUIDE HOLES FOR POST POCKET MUST BE PATCHED

DETAIL 2
SCALE: NONE
7S3 7S3

10/27/95	ADDENDUM 2-ADDED POST POCKET NOTE
10/13/95	ADDENDUM 1
DATE	REVISION

STATE OF HAWAII
DEPARTMENT OF TRANSPORTATION
HIGHWAYS DIVISION

ACCESS OPENING SAFETY RAILING - DETAILS

COMMON WORK
H-3 FINISH (UNIT III)
FAIP NO. I-H3-1(75), UNIT III
T.K. TUNNEL/ACCESS ROADS

SCALE: NONE DATE: JUN 1995

PETER G. BIBBES
LICENSED PROFESSIONAL ENGINEER
No. 6467-S
HAWAII, U.S.A.

THIS WORK WAS PREPARED BY ME OR UNDER MY SUPERVISION

SHEET NO. 7S3 OF 6 SHEETS

		DATE
ORIGINAL PLAN	SURVEY PLOTTED BY	
	DRAWN BY	B. BUNYI NOV 94
	TRACED BY	" "
NOTE BOOK	DESIGNED BY	D. DRYDEN NOV 94
	QUANTITIES BY	" "
NO.	CHECKED BY	P. BIBBES DEC 94

BUNYI EL:\00011241011DWG.MECH\MS001.FGB71 30JAN95-13:33:00

ADD. 276

FED. ROAD DIST. NO.	STATE	FED. AID PROJ. NO.	FISCAL YEAR	SHEET NO.	TOTAL SHEETS
HAWAII	HAW.	I-H3-1(75) UNIT III	1994	277	353

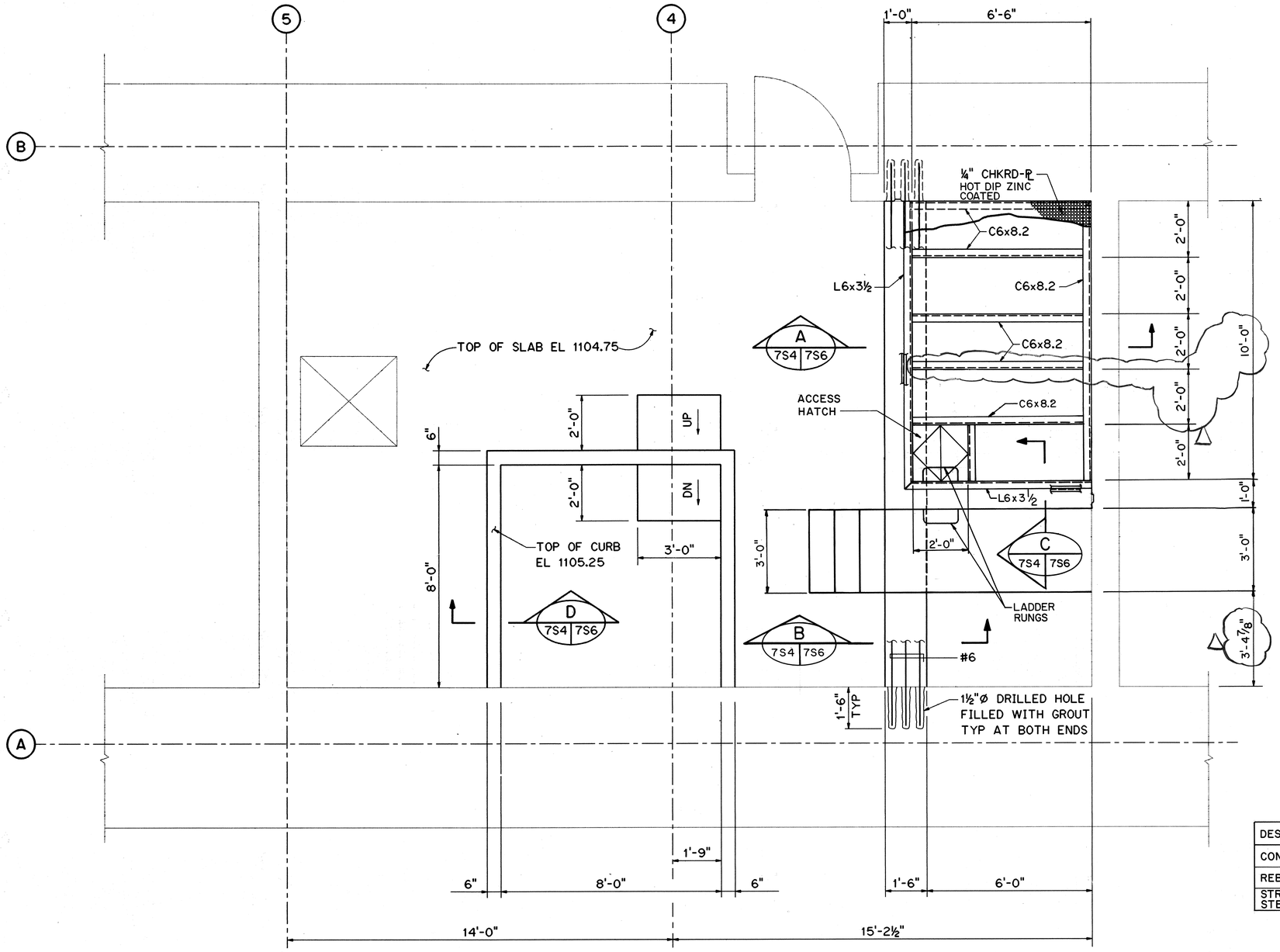

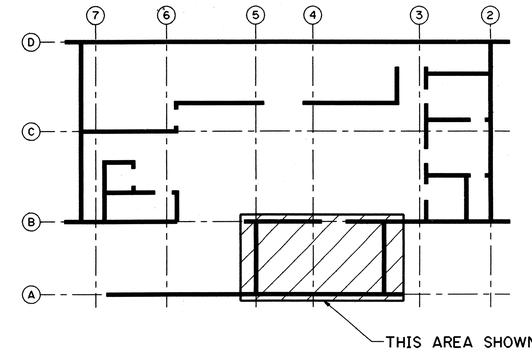

KEY PLAN

HALAWA IB PORTAL BUILDING
LEVEL 4

NOTES:

1. FOR GENERAL STRUCTURAL NOTES, SEE SHEET NO. 1G12.

FOR DETAIL AS-BUILT INFORMATION
REFER TO CONSTRUCTION SUBMITTALS

SUMMARY OF ITEMS

DESCRIPTION	UNIT	QUANTITY
CONCRETE	CU YD	9.5
REBAR	LB	1150
STRUCTURAL STEEL	LB	1300

DATE	REVISION
2/3/97	DCN 75-011: REVISED WATER TANK PER RESPONSE TO RFI # 4097-177
10/27/95	ADDENDUM 2 - ADDED HOT DIP ZINC COATED TO CHKRD PLATE
10/13/95	ADDENDUM 1

GRAPHIC SCALE

2' 1' 0' 2' 4'

½" = 1'-0"

PETER G. BIBBES
LICENSED PROFESSIONAL ENGINEER
No. 6467-S
HAWAII, U.S.A.

THIS WORK WAS PREPARED BY ME OR UNDER MY SUPERVISION

STATE OF HAWAII
DEPARTMENT OF TRANSPORTATION
HIGHWAYS DIVISION

HALAWA POTABLE WATER TANK - PLAN

COMMON WORK
H-3 FINISH (UNIT III)
FAIP NO. I-H3-1(75), UNIT III
T.K. TUNNEL/ACCESS ROADS

SCALE: 1/2" = 1'-0" DATE: JUN 1995

SHEET NO. 7S4 OF 6 SHEETS

ADD. 277

ORIGINAL PLAN		DATE
	SURVEY PLOTTED BY	
	DRAWN BY T. BURNS	MAR 95
	TRACED BY " "	"
NOTE BOOK	DESIGNED BY S. OWYANG	MAR 95
	QUANTITIES BY " "	"
NO.	CHECKED BY P. BIBBES	MAR 95

HERNANDEZ ELWOOD:::2410:DWG.STRUCT\JST049.FGB71 15JUN95-11:08:40

FED. ROAD DIST. NO.	STATE	FED. AID PROJ. NO.	FISCAL YEAR	SHEET NO.	TOTAL SHEETS
HAWAII	HAW.	I-H3-1(75) UNIT III	1994	278	353

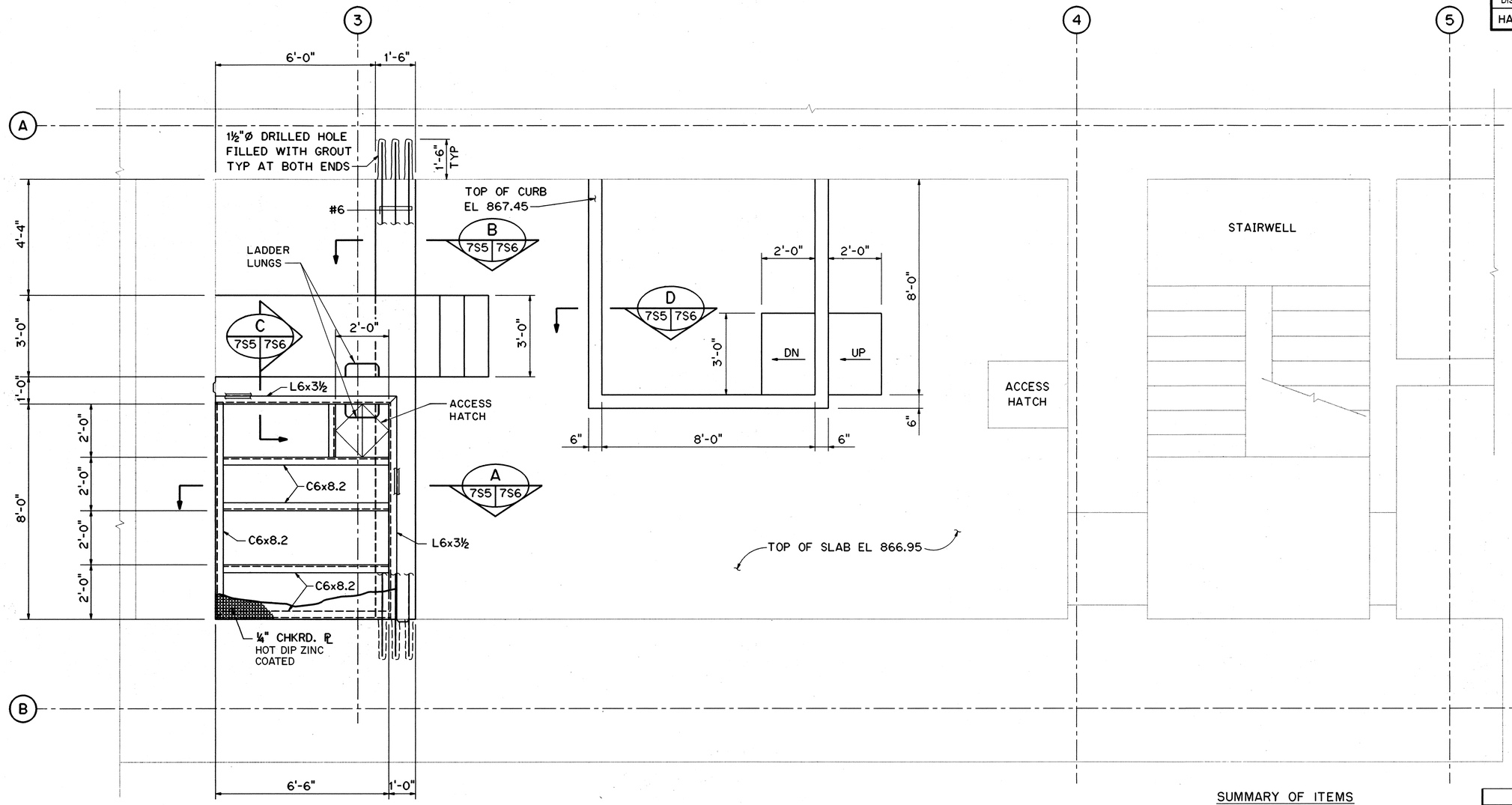

PLAN

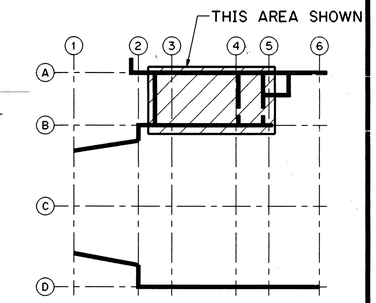

KEY PLAN

HAIKU OB PORTAL BUILDING
LEVEL 2

NOTES:

1. FOR GENERAL STRUCTURAL NOTES, SEE SHEET NO. 1G12

FOR DETAIL AS-BUILT INFORMATION REFER TO CONSTRUCTION SUBMITTALS

SUMMARY OF ITEMS

DESCRIPTION	UNIT	QUANTITY
CONCRETE	CU YD	9.5
REBAR	LB	1150
STRUCTURAL STEEL	LB	1300

GRAPHIC SCALE

2' 1' 0' 2' 4'

½" = 1'-0"

PETER G. BIBBES LICENSED PROFESSIONAL ENGINEER No. 6467-S HAWAII, U.S.A.

THIS WORK WAS PREPARED BY ME OR UNDER MY SUPERVISION

DATE	REVISION
10/27/95	ADDENDUM 2-ADDED HOT DIP ZINC COATED TO CHKRD PLATE
10/13/95	ADDENDUM 1

STATE OF HAWAII
DEPARTMENT OF TRANSPORTATION
HIGHWAYS DIVISION

HAIKU POTABLE WATER TANK - PLAN

COMMON WORK
H-3 FINISH (UNIT III)
FAIP NO. I-H3-1(75), UNIT III
T.K. TUNNEL/ACCESS ROADS

SCALE: 1/2" = 1'-0" DATE: JUN 1995

SHEET NO. 7S5 OF 6 SHEETS

ADD. 278

ORIGINAL PLANS			DATE
	SURVEY PLOTTED BY		
	DRAWN BY	T. BURNS	MAR 95
	TRACED BY		
	DESIGNED BY	S. OWYANG	MAR 95
NOTE BOOK	QUANTITIES		
	CHECKED BY	P. BIBBES	MAR 95
NO.			

HERNANDEZ ELWOOD:::2410:DWG.STRUCT3S10S1.FGB71 13JUN95-11:12:00

FED. ROAD DIST. NO.	STATE	FED. AID PROJ. NO.	FISCAL YEAR	SHEET NO.	TOTAL SHEETS
HAWAII	HAW.	I-H3-1(75) UNIT III	1994	279	353

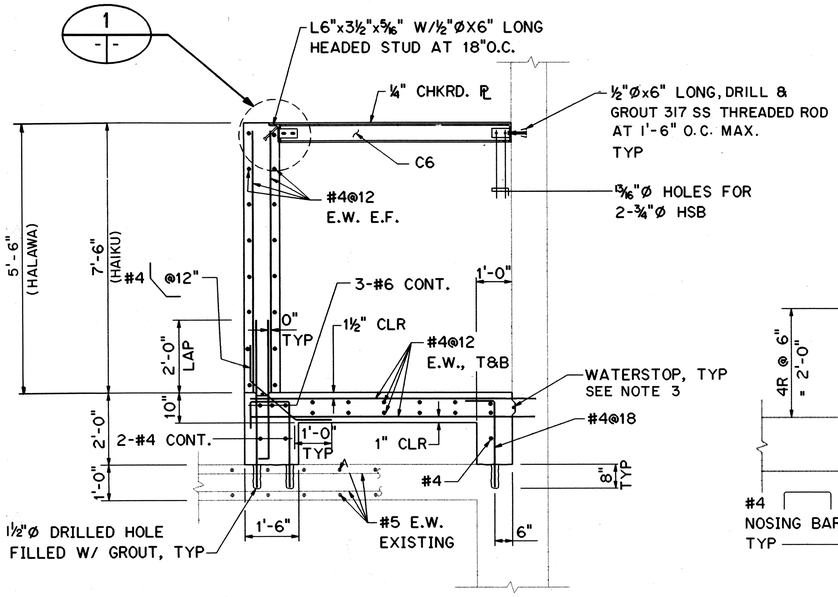

SECTION A
SCALE: 1/2" = 1'-0" 7S4 7S6 7S5

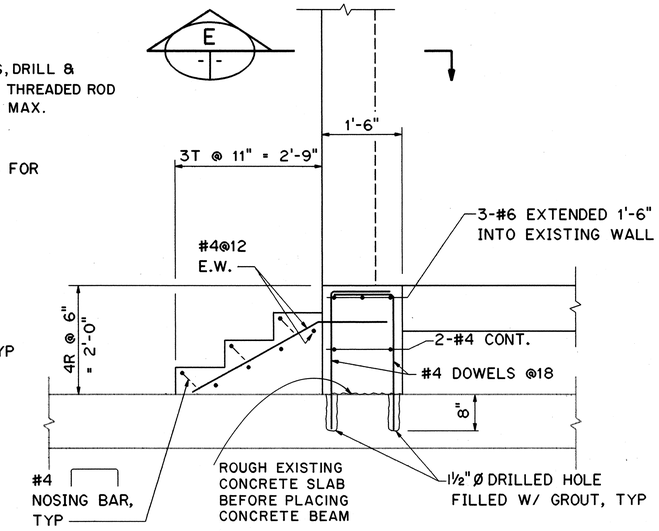

SECTION B
SCALE: 3/4" = 1'-0" 7S4 7S6 7S5

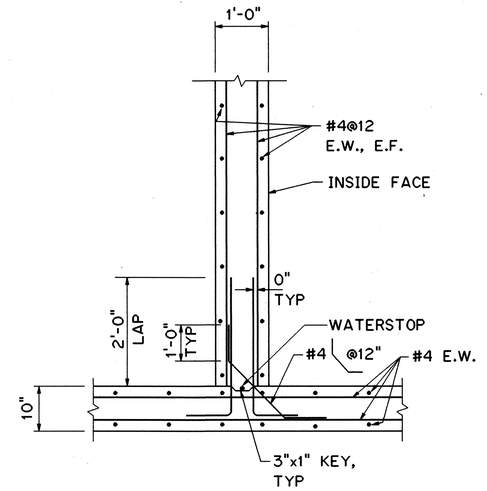

SECTION C
SCALE: 3/4" = 1'-0" 7S4 7S6 7S5

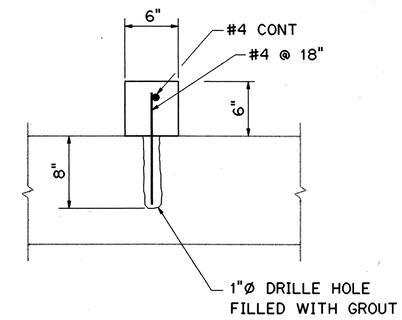

SECTION D
SCALE: 1½" = 1'-0" 7S4 7S6 7S5

NOTES:

1. FOR GENERAL STRUCTURAL NOTES, SEE SHEET NO. IG12.
2. CONSTRUCTION JOINTS ALLOWABLE ONLY WHERE SHOWN.
3. WATERSTOP SHALL BE SYNKO-FLEX BY SYNKO-FLEX PRODUCTS, INC; LOCKSTOP BY GREENSTREAK; ULTRA-STOP BY VINYLEX OR APPROVED EQUAL. WATERSTOP SHALL BE APPROVED FOR USE WITH POTABLE WATER.
4. SEAL ALL INSIDE JOINTS WITH SILICONE SEALANT AFTER CONCRETE CURES. APPLY SPRAY-TYPE WATERPROOFING. WATERPROOFING SHALL BE APPROVED FOR USE WITH POTABLE WATER.

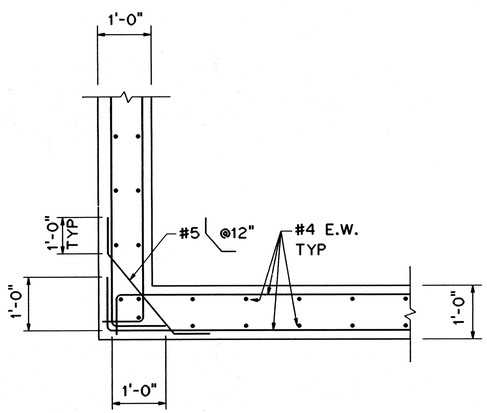

SECTION E
SCALE: 3/4" = 1'-0" -|-

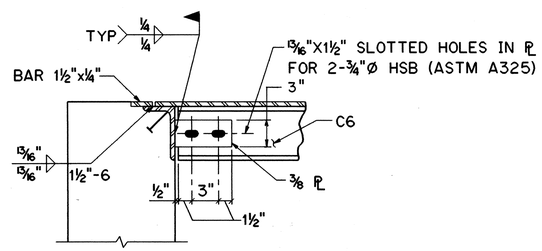

TYPICAL C6 TO LEDGE CONNECTION

DETAIL 1
SCALE 1½" = 1'-0" -|-

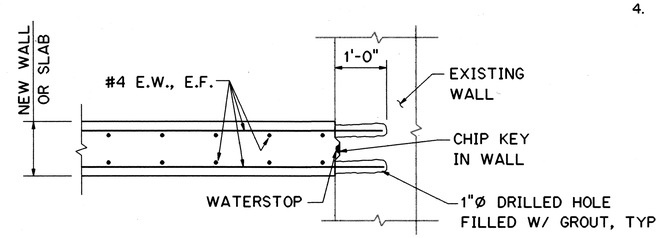

TYPICAL WALL OR SLAB TO EXIST. WALL CONNECTION

DETAIL 2
SCALE: 3/4" = 1'-0" -|-

GRAPHIC SCALES

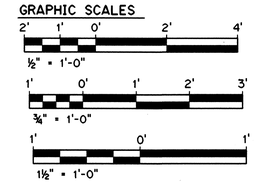

PETER G. BIBBES LICENSED PROFESSIONAL ENGINEER No. 6467-S HAWAII, U.S.A.

THIS WORK WAS PREPARED BY ME OR UNDER MY SUPERVISION

DATE	REVISION
2/3/97	DCN 75-011: REVISED WATER TANK HEIGHT (SECTION A) PER RESPONSE TO RFI # 4097-177
10/13/95	ADDENDUM 1

STATE OF HAWAII
DEPARTMENT OF TRANSPORTATION
HIGHWAYS DIVISION

POTABLE WATER TANK
SECTIONS AND DETAILS
COMMON WORK
H-3 FINISH (UNIT III)
FAIP NO. I-H3-1(75), UNIT III
T.K. TUNNEL/ACCESS ROADS

SCALE: AS NOTED DATE: JUN 1995

SHEET NO. 7S6 OF 6 SHEETS

SURVEY PLOTTED BY		DATE
DRAWN BY	T. BURNS	MAR 95
TRACED BY		
DESIGNED BY	S. ONYANG	MAR 95
QUANTITIES		
CHECKED BY	P. BIBBES	MAR 95

ORIGINAL PLAN
NOTE BOOK
NO.

HERNANDEZ ELWOOD:1124T01.DWG.STRUCT3STD50.PGB71 13JUN95-11:13:50

ADD. 279

FED. ROAD DIST. NO.	STATE	FED. AID PROJ. NO.	FISCAL YEAR	SHEET NO.	TOTAL SHEETS
HAWAII	HAW.	I-H3-1(75) UNIT III	1994	280	353

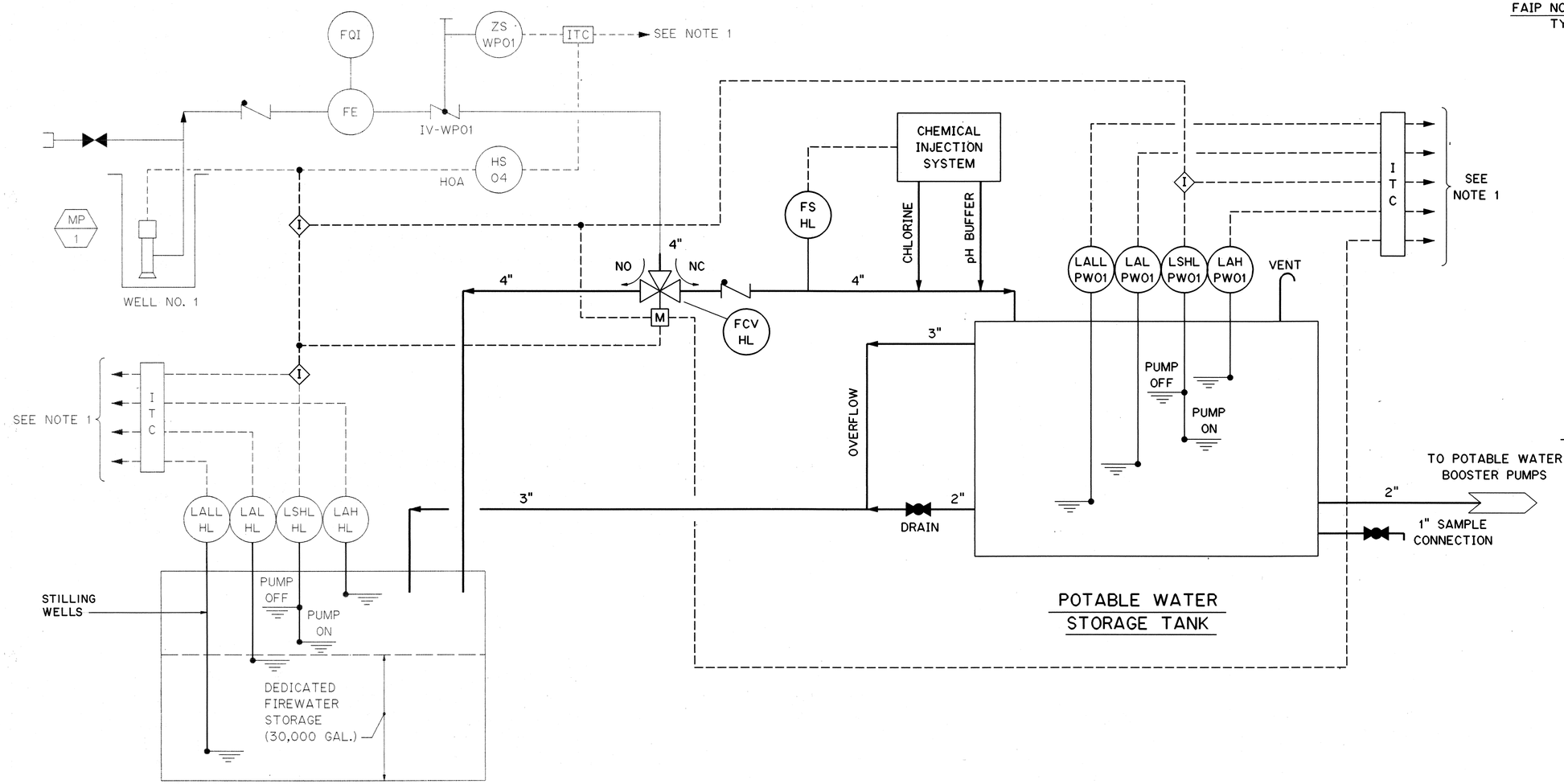

FIREWATER/TUNNEL WASH WATER STORAGE TANK

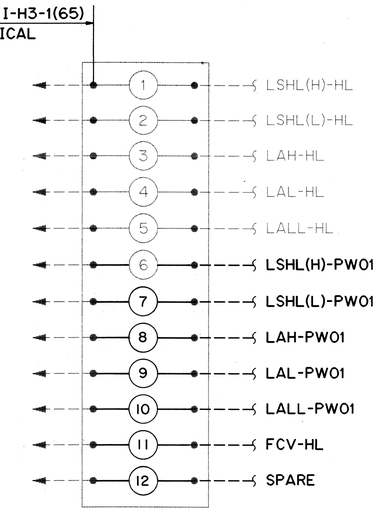

HALAWA WATER TANK ITC EXISTING

NOTES:

1. CONTROL TRANSMISSION TO TUNNEL FIRE PROTECTION SYSTEM DISPLAY.
2. ITC INTERFACE TERMINAL CABINET (DUAL TERMINAL STRIP)

FOR DETAIL AS-BUILT INFORMATION REFER TO CONSTRUCTION SUBMITTALS

DATE	REVISION
10/13/95	ADDENDUM 1

KENNETH J. HARRIS LICENSED PROFESSIONAL ENGINEER NO. 7707-M HAWAII, U.S.A.

THIS WORK WAS PREPARED BY ME OR UNDER MY SUPERVISION

STATE OF HAWAII
DEPARTMENT OF TRANSPORTATION
HIGHWAYS DIVISION

HALAWA POTABLE WATER TREATMENT - P&ID

COMMON WORK
H-3 FINISH (UNIT III)
FAIP NO. I-H3-1(75), UNIT III
T.K. TUNNEL/ACCESS ROADS

SCALE: NONE DATE: JUN 1995

SHEET NO. 7M1 OF 16 SHEETS

ADD. 280

ORIGINAL PLAN		DATE
	SURVEY PLOTTED BY	
	DRAWN BY T. BURNS	MAR 95
NOTE BOOK	TRACED BY	MAR 95
	DESIGNED BY D. DRYDEN	MAR 95
NO.	QUANTITIES BY	
	CHECKED BY K. HARRIS	MAR 95

HERNANDEZ ELWOOD:::2410:(DWG.MECH)M1036.FGB71 08JUN95-10:56:00

FED. ROAD DIST. NO.	STATE	FED. AID PROJ. NO.	FISCAL YEAR	SHEET NO.	TOTAL SHEETS
HAWAII	HAW.	I-H3-1(75) UNIT III	1994	281	353

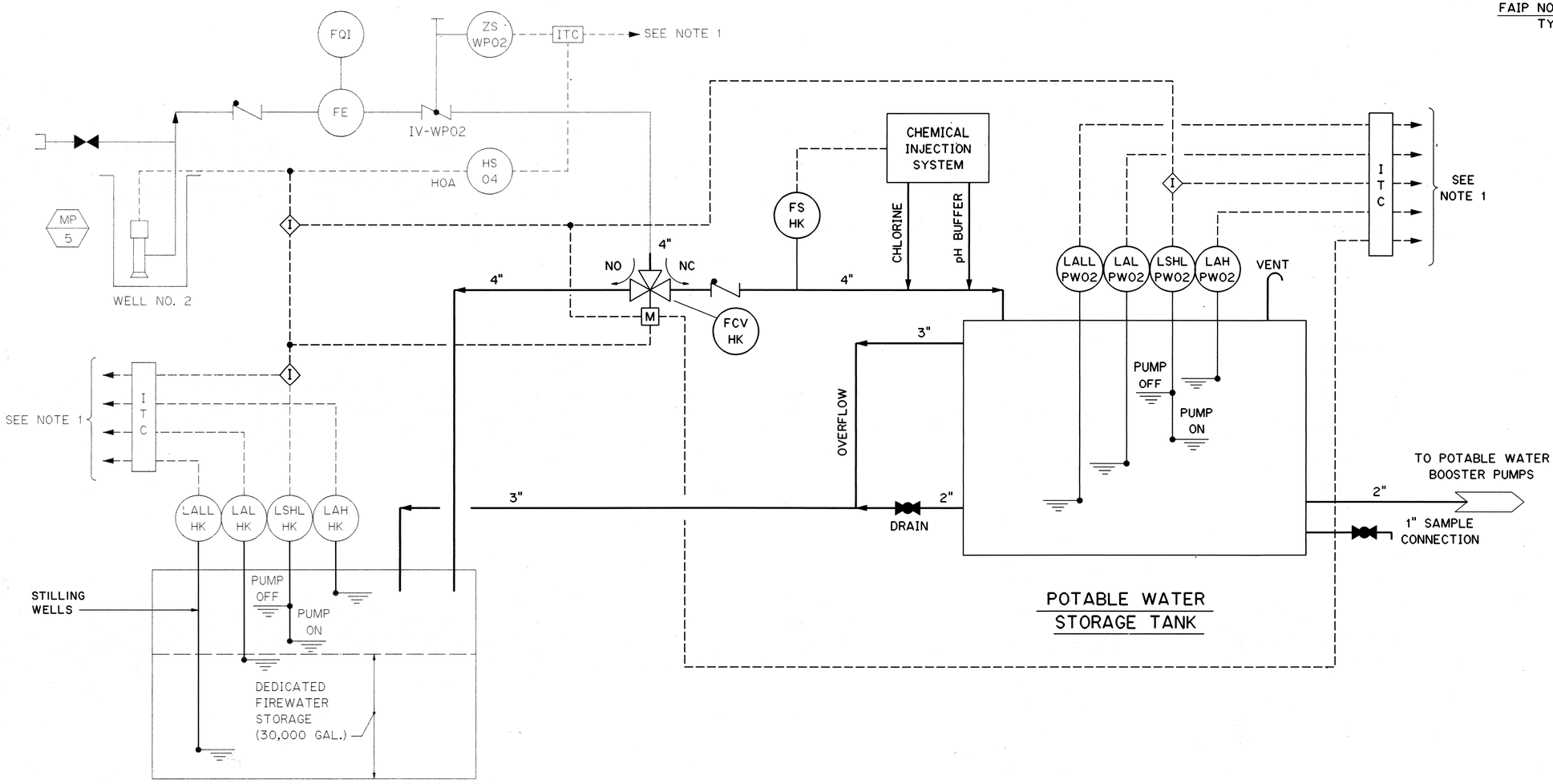

FIREWATER/TUNNEL WASH WATER STORAGE TANK

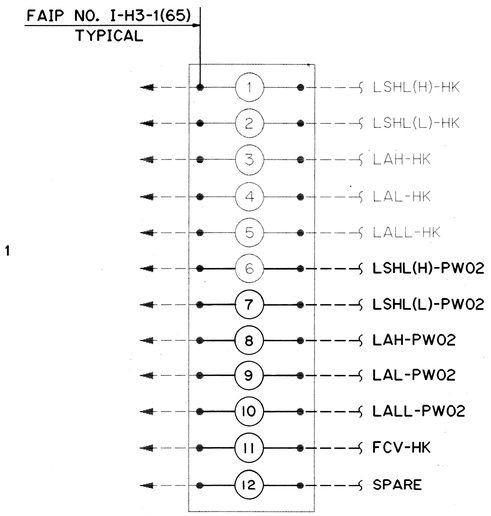

HAIKU WATER TANK ITC EXISTING

NOTES:

1. CONTROL TRANSMISSION TO TUNNEL FIRE PROTECTION SYSTEM DISPLAY.
2. ITC INTERFACE TERMINAL CABINET (DUAL TERMINAL STRIP)

FOR DETAIL AS-BUILT INFORMATION REFER TO CONSTRUCTION SUBMITTALS

DATE	REVISION
10/13/95	ADDENDUM 1

ORIGINAL PLAN	
NOTE BOOK	
NO.	
SURVEY PLOTTED BY	DATE
DRAWN BY	T. BURNS MAR 95
TRACED BY	" "
DESIGNED BY	D. DRYDEN MAR 95
QUANTITIES BY	" "
CHECKED BY	K. HARRIS MAR 95

KENNETH J. HARRIS LICENSED PROFESSIONAL ENGINEER NO. 7707-M HAWAII, U.S.A.

THIS WORK WAS PREPARED BY ME OR UNDER MY SUPERVISION

STATE OF HAWAII
DEPARTMENT OF TRANSPORTATION
HIGHWAYS DIVISION

HAIKU POTABLE WATER TREATMENT - P&ID

COMMON WORK
H-3 FINISH (UNIT III)
FAIP NO. I-H3-1(75), UNIT III
T.K. TUNNEL/ACCESS ROADS

SCALE: NONE DATE: JUN 1995

SHEET NO. 7M2 OF 16 SHEETS

ADD. 281

HERNANDEZ ELWOOD:::12410:DWG.MECHJM103S.FGB71 08JUN95-11.38.10

FED. ROAD DIST. NO.	STATE	FED. AID PROJ. NO.	FISCAL YEAR	SHEET NO.	TOTAL SHEETS
HAWAII	HAW.	I-H3-1(75) UNIT III	1994	282	353

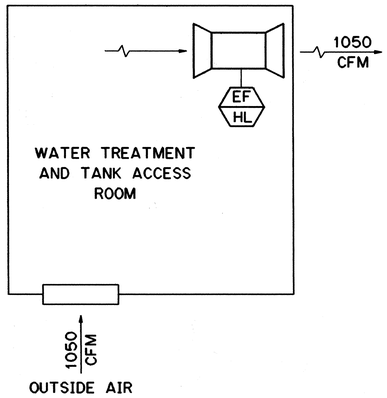

AIRFLOW DIAGRAM

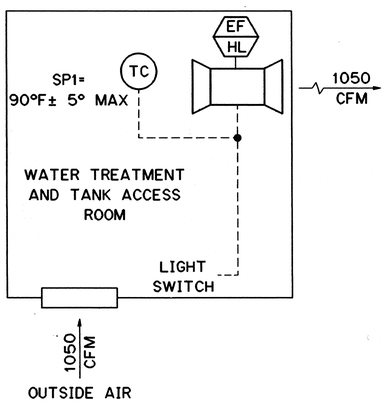

CONTROL DIAGRAM

HALAWA PORTAL BUILDING - IB

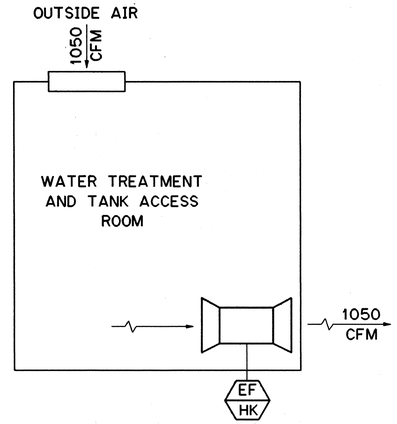

AIRFLOW DIAGRAM

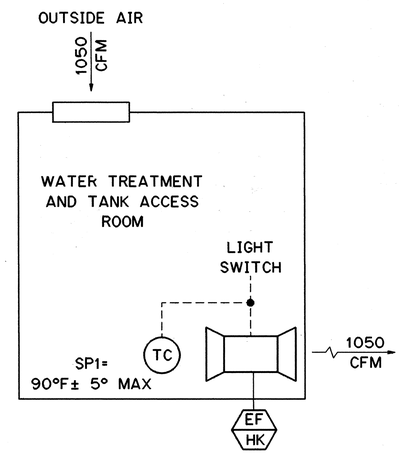

CONTROL DIAGRAM

HAIKU PORTAL BUILDING - OB

NOTES:

1. PROVIDE 1/2 INCH WIRE MESH GALVANIZED SCREEN FOR ALL OPEN DUCT OR EQUIPMENT INTAKE/DISCHARGE OPENINGS. PROVIDE FRAMING NECESSARY FOR SCREEN SUPPORT ON LARGE OPENINGS.
2. THERMOSTATS SHALL BE MOUNTED AT A HEIGHT OF 3'-4, NEAR A LIGHT SWITCH.
3. STATIC PRESSURE IS IN INCHES WATER COLUMN.

FAN SCHEDULE

EQUIPMENT NUMBER	SERVICE	ARRANGEMENT	CLASS	DRIVE	WHEEL: DIAMETER (INCHES)	WHEEL: TYPE	WHEEL: RPM	PERFORMANCE: AIR CAPACITY ACFM	PERFORMANCE: STATIC H_2O PRESS IN.	MOTOR: NAME PLATE HP	MOTOR: RPM	MOTOR: VOLTS	MOTOR: PHASE	MOTOR: HERTZ	ISOLATOR BASE: TYPE	ISOLATOR BASE: STATIC DEFLEC IN.	REMARKS
EF-HL	WATER TREATMENT AND TANK ACCESS ROOM	-	-	DIRECT	-	CENTRIFUGAL IN-LINE	-	1200	0.375	¼	-	120	1	60	-	-	
EF-HK																	

DATE	REVISION

STATE OF HAWAII
DEPARTMENT OF TRANSPORTATION
HIGHWAYS DIVISION

WATER TREATMENT/TANK ACCESS ROOM VENTILATION

COMMON WORK
H-3 FINISH (UNIT III)
FAIP NO. I-H3-1(75), UNIT III
T.K. TUNNEL/ACCESS ROADS

SCALE: NONE DATE: JUN 1995

KENNETH J. HARRIS
LICENSED PROFESSIONAL ENGINEER
NO. 7707-M
HAWAII, U.S.A.

THIS WORK WAS PREPARED BY ME OR UNDER MY SUPERVISION

SHEET NO. 7M3 OF 16 SHEETS

ORIGINAL PLAN			DATE
	SURVEY PLOTTED BY	T. BURNS	MAR 95
	DRAWN BY		
	TRACED BY		
NOTE BOOK	DESIGNED BY	D. DRYDEN	MAR 95
	QUANTITIES BY		
NO.	CHECKED BY	K. HARRIS	MAR 95

HERNANDEZ ELWOOD:I:241OI(DWG.MECHJM1041.FGB71 09JUN95-07:46:40

FED. ROAD DIST. NO.	STATE	FED. AID PROJ. NO.	FISCAL YEAR	SHEET NO.	TOTAL SHEETS
HAWAII	HAW.	I-H3-1(75) UNIT III	1994	283	353

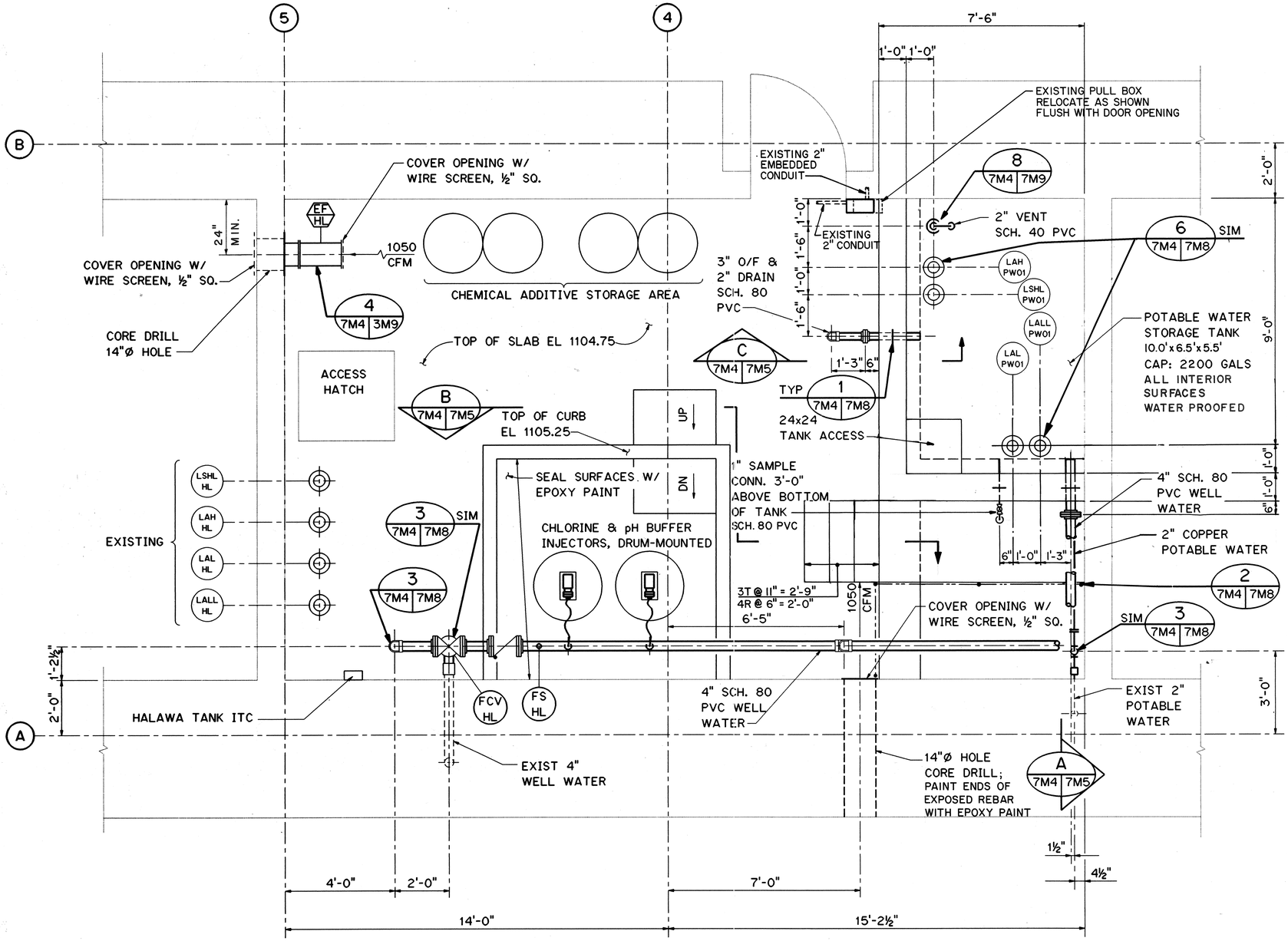

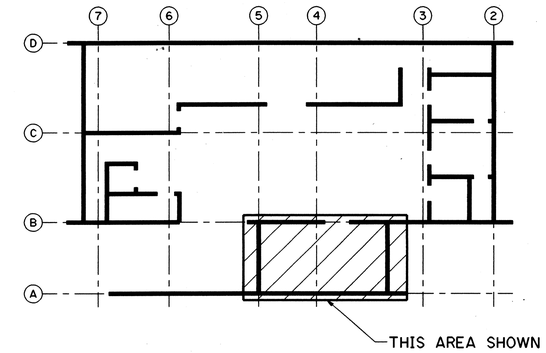

KEY PLAN

HALAWA IB PORTAL BUILDING
LEVEL 4

ORIGINAL PLAN		DATE
	SURVEY PLOTTED BY	
	DRAWN BY T. BURNS	MAR 95
	TRACED BY	
NOTE BOOK	DESIGNED BY D. DRYDEN	MAR 95
	QUANTITIES BY	
NO.	CHECKED BY K. HARRIS	MAR 95

GRAPHIC SCALE

2' 1' 0' 2' 4'

½" = 1'-0"

KENNETH J. HARRIS LICENSED PROFESSIONAL ENGINEER NO. 7707-M HAWAII, U.S.A.

THIS WORK WAS PREPARED BY ME OR UNDER MY SUPERVISION

DATE	REVISION
2/3/97	DCN 75-011: REVISED WATER TANK DIM. AND RELOCATED PULL BOX PER RESPONSE TO RFI # 4097-177
10/13/95	ADDENDUM 1

STATE OF HAWAII
DEPARTMENT OF TRANSPORTATION
HIGHWAYS DIVISION

HALAWA POTABLE WATER

TREATMENT - PLAN

COMMON WORK
H-3 FINISH (UNIT III)
FAIP NO. I-H3-1(75), UNIT III
T.K. TUNNEL/ACCESS ROADS

SCALE: 1/2" = 1'-0" DATE: JUN 1995

SHEET NO. 7M4 OF 16 SHEETS

ADD. 283

HERNANDEZ ELWOOD:::2410:(DWG.MECH)M1038.FGB71 08JUN95-11:41:30

FED. ROAD DIST. NO.	STATE	FED. AID PROJ. NO.	FISCAL YEAR	SHEET NO.	TOTAL SHEETS
HAWAII	HAW.	I-H3-1(75) UNIT III	1994	284	353

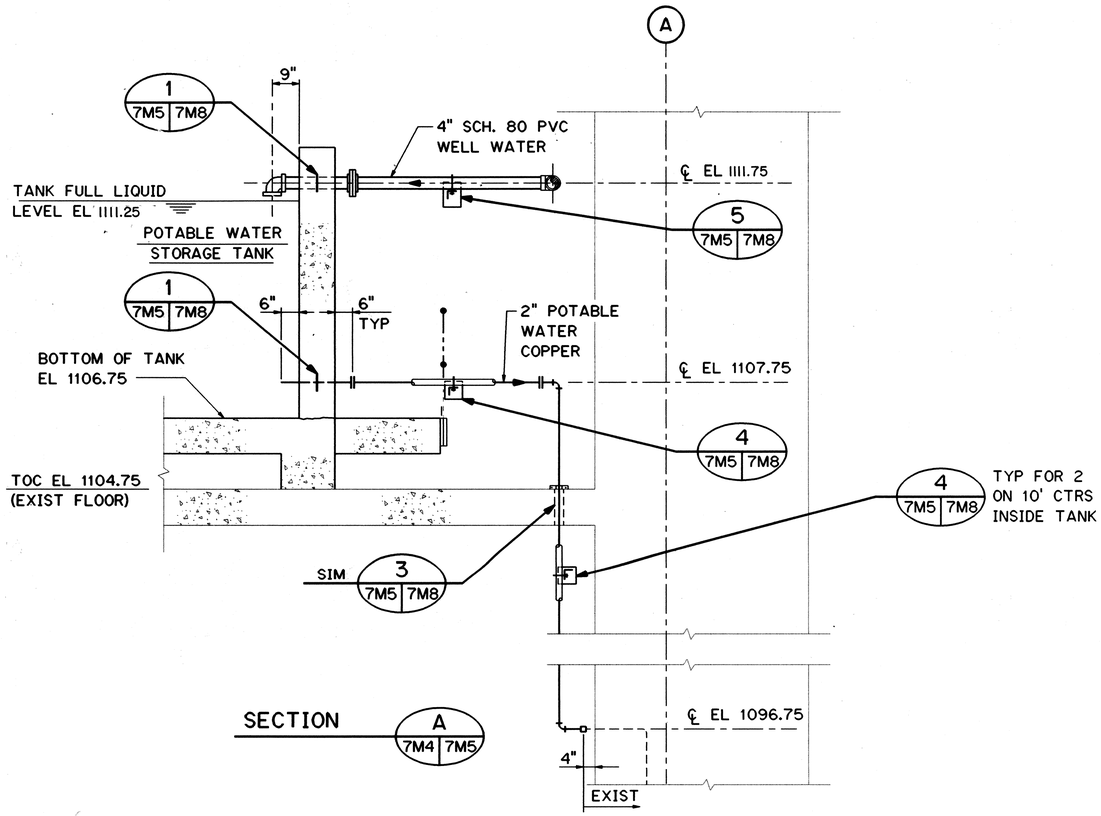

SECTION A 7M4 7M5

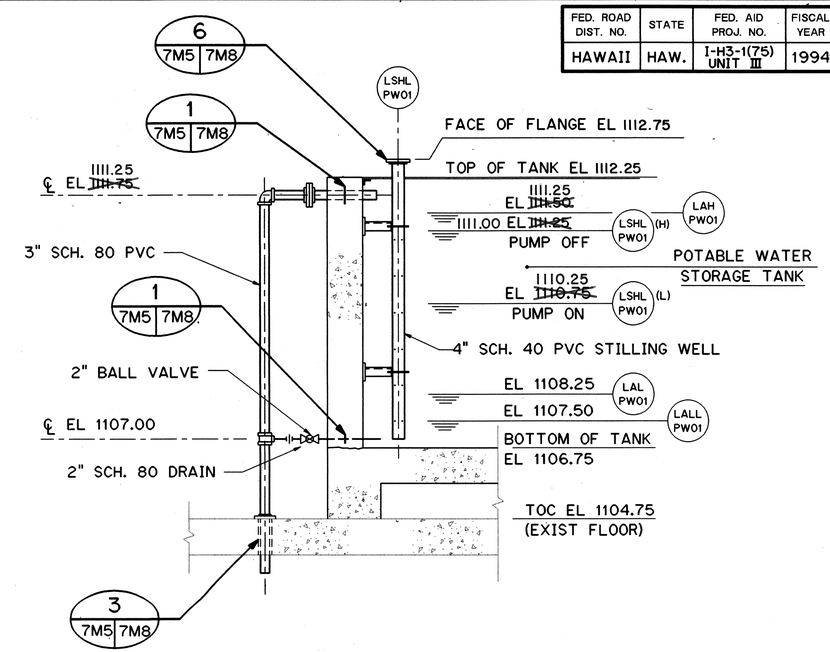

SECTION C 7M4 7M5
NOT TO SCALE

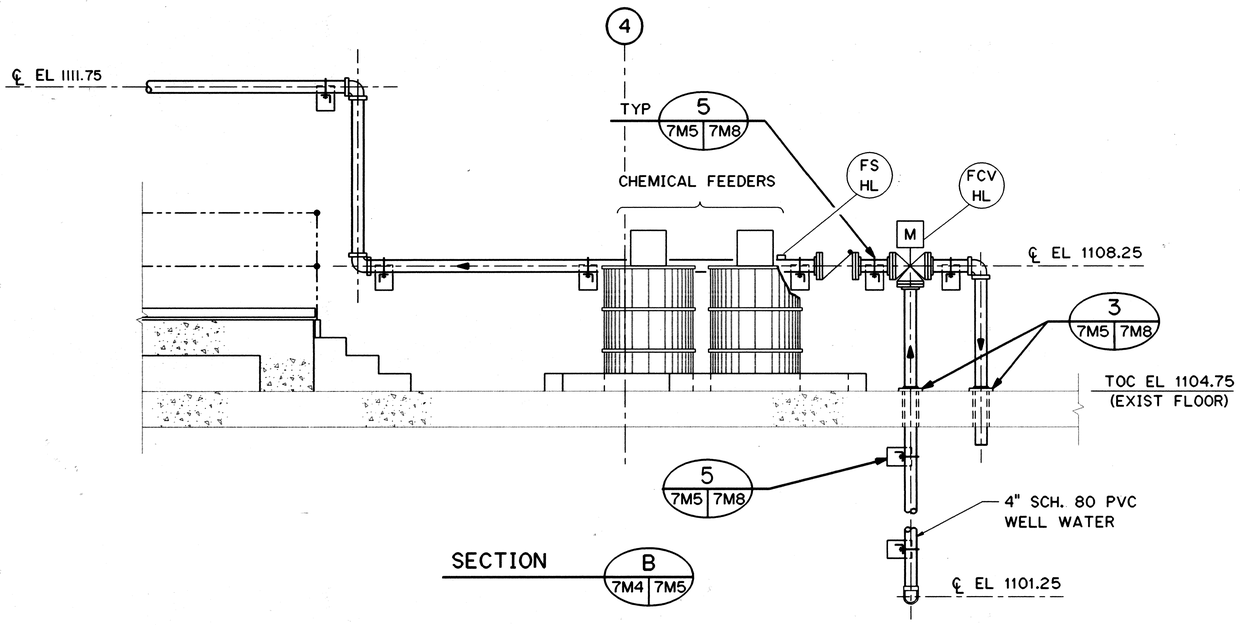

SECTION B 7M4 7M5

GRAPHIC SCALE
2' 1' 0' 2' 4'
½" = 1'-0"

KENNETH J. HARRIS LICENSED PROFESSIONAL ENGINEER NO. 7707-M HAWAII, U.S.A.

THIS WORK WAS PREPARED BY ME OR UNDER MY SUPERVISION

DATE	REVISION
2/3/97	DCN 75-011: REVISED PIPING AND LEVEL SWITCH ELEVATIONS PER RESPONSE TO RFI # 4097-177
10/27/95	ADDENDUM 2 - CHANGED PIPE SUPT.
	DET. 1 SIM. TO DETAIL 5 IN SECT. B

STATE OF HAWAII
DEPARTMENT OF TRANSPORTATION
HIGHWAYS DIVISION

HALAWA POTABLE WATER TREATMENT - SECTIONS

COMMON WORK
H-3 FINISH (UNIT III)
FAIP NO. I-H3-1(75), UNIT III
T.K. TUNNEL/ACCESS ROADS

SCALE: 1/2" = 1'-0" DATE: JUN 1995

SHEET NO. 7M5 OF 16 SHEETS

ADD. 284

ORIGINAL PLAN		DATE
SURVEY PLOTTED BY	T. BURNS	MAR 95
DRAWN BY		
TRACED BY		
DESIGNED BY	D. DRYDEN	MAR 95
QUANTITIES BY		
CHECKED BY	K. HARRIS	MAR 95
NOTE BOOK		
NO.		

HERNANDEZ ELWOOD:T:241011DWG.MECHJM1039.PGB71 08JUN95-11:44:46

FED. ROAD DIST. NO.	STATE	FED. AID PROJ. NO.	FISCAL YEAR	SHEET NO.	TOTAL SHEETS
HAWAII	HAW.	I-H3-1(75) UNIT III	1994	285	353

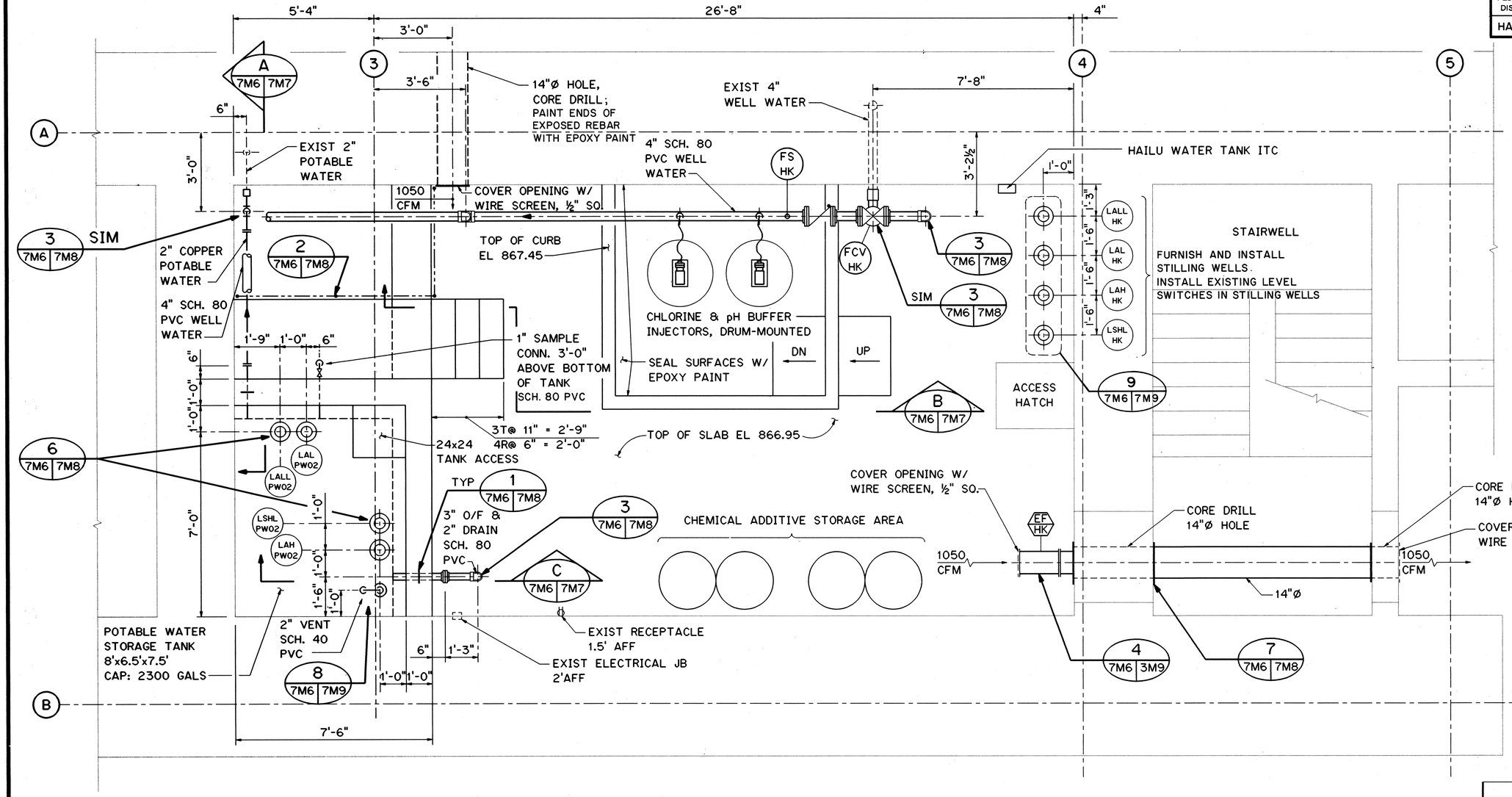

PLAN

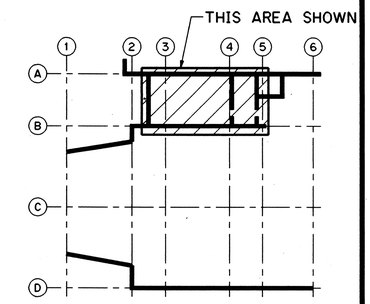

KEY PLAN

HAIKU OB PORTAL BUILDING LEVEL 2

DATE	REVISION
10/13/95	ADDENDUM 1

GRAPHIC SCALE

2' 1' 0' 2' 4'

½" = 1'-0"

KENNETH J. HARRIS LICENSED PROFESSIONAL ENGINEER NO. 7707-M HAWAII, U.S.A.

THIS WORK WAS PREPARED BY ME OR UNDER MY SUPERVISION

STATE OF HAWAII
DEPARTMENT OF TRANSPORTATION
HIGHWAYS DIVISION

HAIKU POTABLE WATER TREATMENT - PLAN

COMMON WORK
H-3 FINISH (UNIT III)
FAIP NO. I-H3-1(75), UNIT III
T.K. TUNNEL/ACCESS ROADS

SCALE: 1/2" = 1'-0" DATE: JUN 1995

SHEET NO. 7M6 OF 16 SHEETS

SURVEY PLOTTED BY	DATE
DRAWN BY T. BURNS	MAR 95
TRACED BY	"
DESIGNED BY D. DRYDEN	MAR 95
QUANTITIES BY	"
CHECKED BY K. HARRIS	MAR 95
ORIGINAL PLAN	
NOTE BOOK	
NO.	

HERNANDEZ ELWOOD:I:241DIDWG.MECHJMT032.FGB71 08JUN95-11:48:10

ADD. 285

FED. ROAD DIST. NO.	STATE	FED. AID PROJ. NO.	FISCAL YEAR	SHEET NO.	TOTAL SHEETS
HAWAII	HAW.	I-H3-1(75) UNIT III	1994	286	353

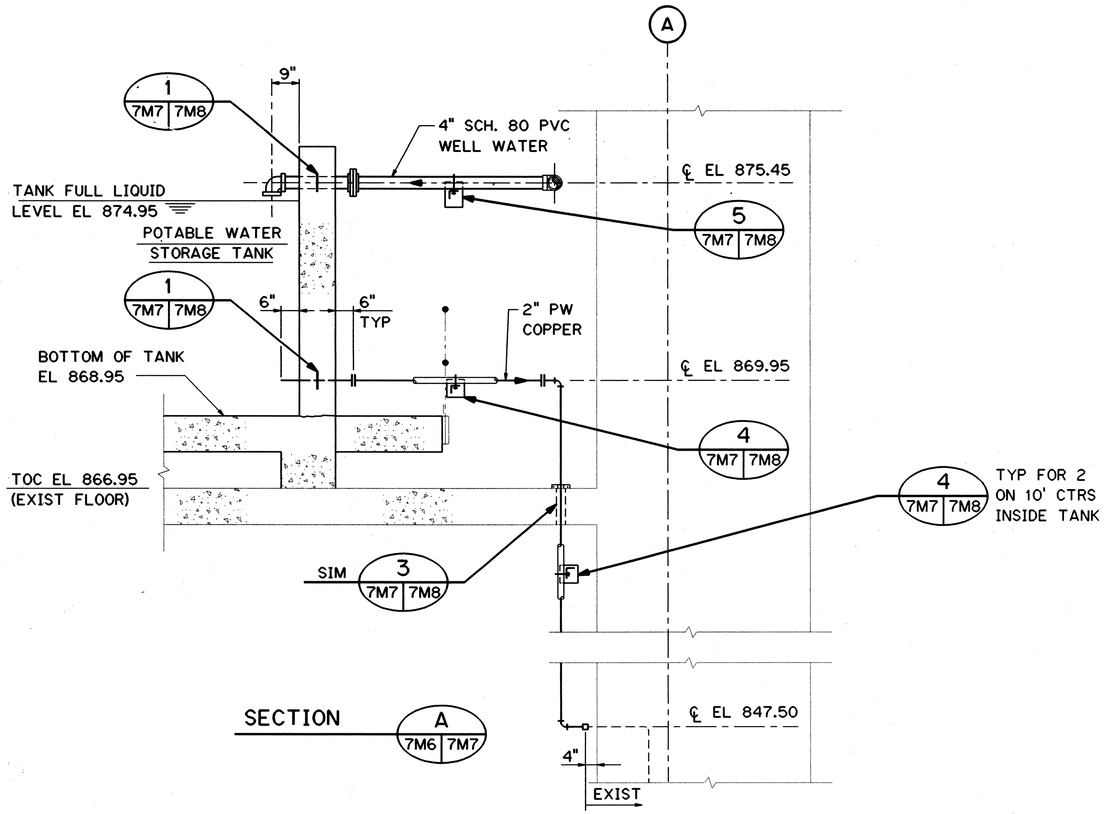

SECTION A 7M6 7M7

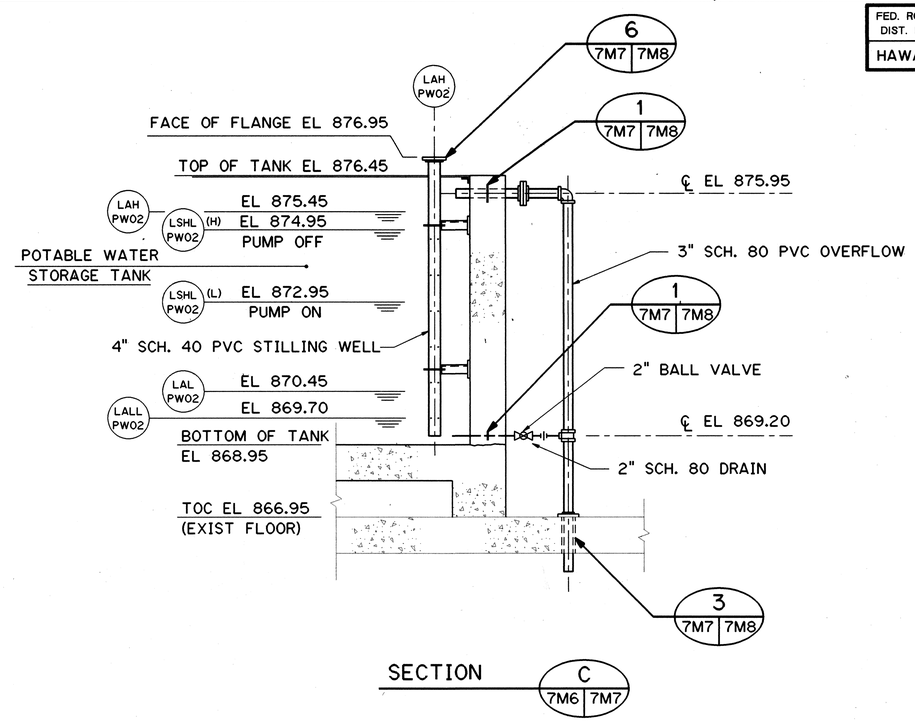

SECTION C 7M6 7M7

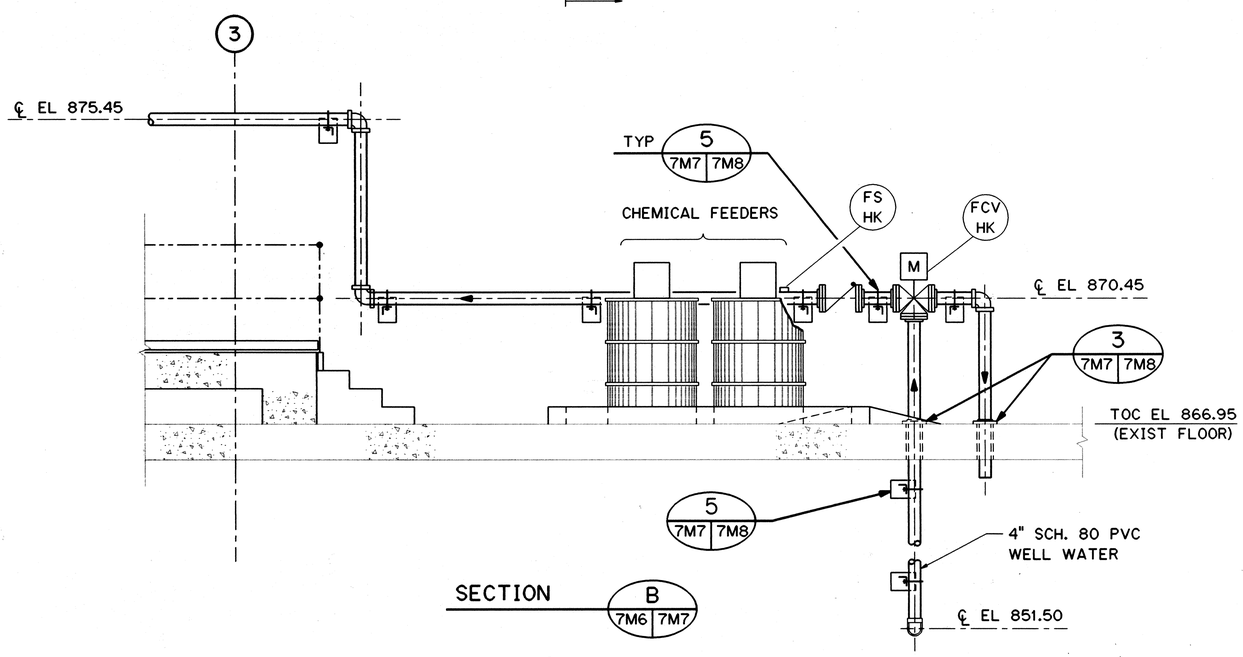

SECTION B 7M6 7M7

GRAPHIC SCALE
2' 1' 0' 2' 4'
½" = 1'-0"

KENNETH J. HARRIS LICENSED PROFESSIONAL ENGINEER NO. 7707-M HAWAII, U.S.A.

THIS WORK WAS PREPARED BY ME OR UNDER MY SUPERVISION

DATE	REVISION
10/27/95	ADDENDUM 2-CHANGED PIPE SUPT.
	DETAIL 1 SIM. TO DETAIL 5 IN SECT. B

STATE OF HAWAII
DEPARTMENT OF TRANSPORTATION
HIGHWAYS DIVISION

HAIKU POTABLE WATER TREATMENT - SECTIONS

COMMON WORK
H-3 FINISH (UNIT III)
FAIP NO. I-H3-1(75), UNIT III
T.K. TUNNEL/ACCESS ROADS

SCALE: 1/2" = 1'-0" DATE: JUN 1995

SHEET NO. 7M7 OF 16 SHEETS

ADD. 286

ORIGINAL PLAN	SURVEY PLOTTED BY T. BURNS	DATE
	DRAWN BY " "	MAR 95
NOTE BOOK	TRACED BY " "	MAR 95
	DESIGNED BY D. DRYDEN	MAR 95
NO.	QUANTITIES BY " "	
	CHECKED BY K. HARRIS	MAR 95

HERNANDEZ ELWOOD:T:2410:TDWG:MECHJM1033.PGB71 08JUN95-11:50:50

FED. ROAD DIST. NO.	STATE	FED. AID PROJ. NO.	FISCAL YEAR	SHEET NO.	TOTAL SHEETS
HAWAII	HAW.	I-H3-1(75) UNIT III	1994	287	353

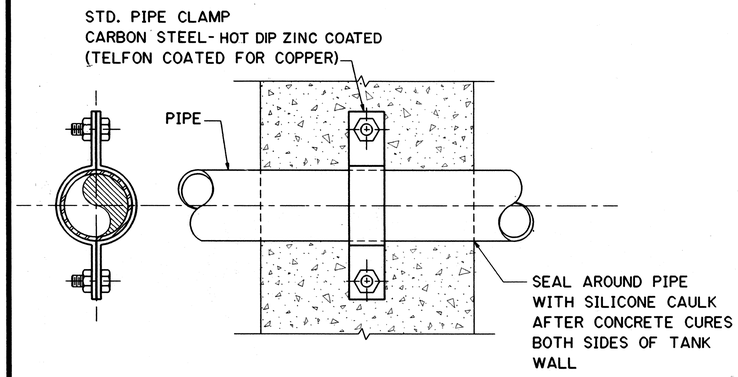

EMBEDDED PIPE WALL ANCHOR DETAIL (1)

SCALE: 3" = 1'-0"

7M4 7M8 7M5 7M6 7M7

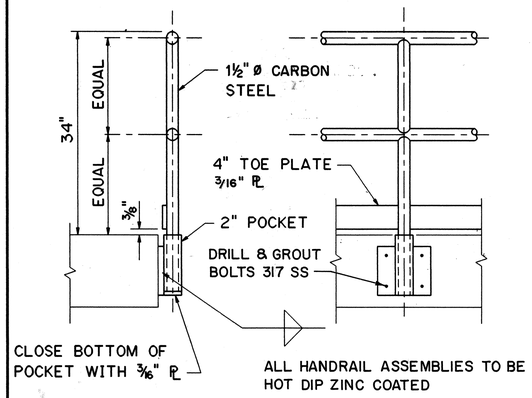

REMOVABLE HANDRAIL DETAIL (2)

SCALE: 1" = 1'-0"

7M4 7M8 7M6

NOM. PIPE SIZE	PIPE O.D.	FLOOR OPENING
2"	2.375"	3.5"
3"	3.5"	4.5"
4"	4.5"	5.5"

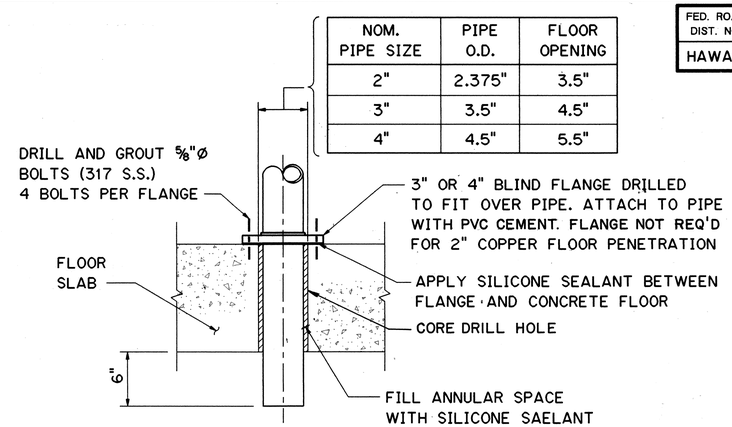

FLOOR PENETRATION SEAL DETAIL (3)

SCALE: 1½" = 1'-0"

7M4 7M8 7M5 7M6 7M7

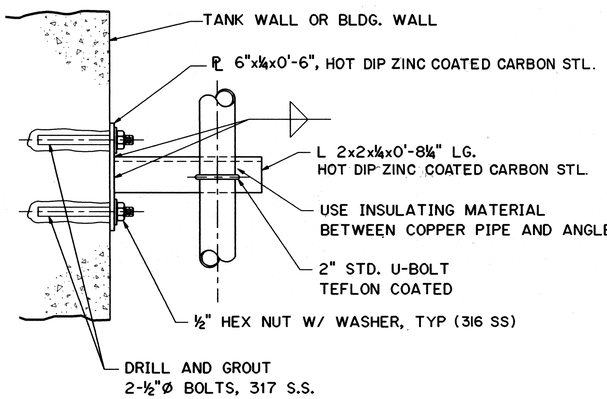

DETAIL (4)

SCALE: 3" = 1'-0"

7M5 7M8 7M7

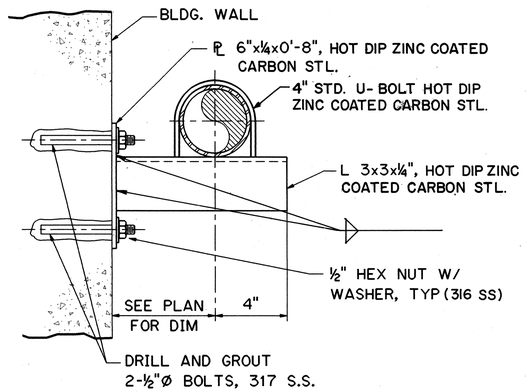

DETAIL (5)

SCALE: 3" = 1'-0"

7M5 7M8 7M7

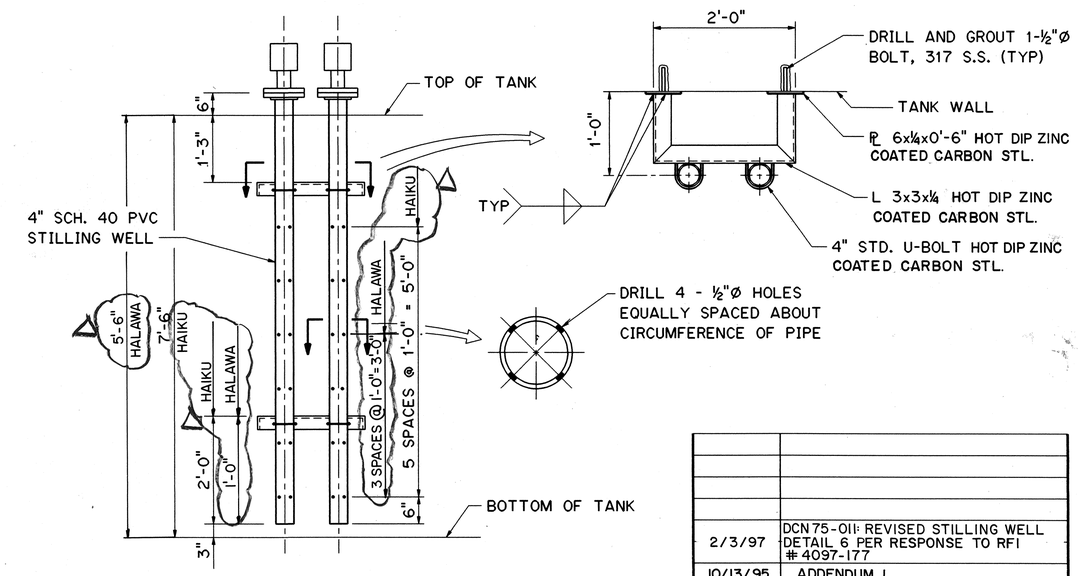

LEVEL SWITCH AND ALARM MOUNTING DETAIL (6)

SCALE: ¾" = 1'-0"

7M4 7M8 7M5 7M6 7M7

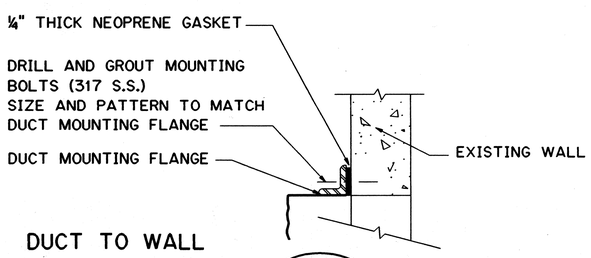

DUCT TO WALL MOUNTING DETAIL (7)

NO SCALE

7M6 7M8

GRAPHIC SCALES

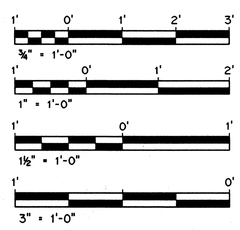

DATE	REVISION
2/3/97	DCN 75-011: REVISED STILLING WELL DETAIL 6 PER RESPONSE TO RFI #4097-177
10/13/95	ADDENDUM 1

STATE OF HAWAII
DEPARTMENT OF TRANSPORTATION
HIGHWAYS DIVISION

POTABLE WATER TREATMENT - DETAILS 1

COMMON WORK
H-3 FINISH (UNIT III)
FAIP NO. I-H3-1(75), UNIT III
T.K. TUNNEL/ACCESS ROADS

SCALE: AS SHOWN DATE: JUN 1994

KENNETH J. HARRIS LICENSED PROFESSIONAL ENGINEER NO. 7707-M HAWAII, U.S.A.

THIS WORK WAS PREPARED BY ME OR UNDER MY SUPERVISION

SHEET NO. 7M8 OF 16 SHEETS

ADD. 287

ORIGINAL PLAN	SURVEY PLOTTED BY T. BURNS DATE MAR 95
NOTE BOOK	DRAWN BY " " MAR 95
	TRACED BY " " MAR 95
	DESIGNED BY D. DRYDEN MAR 95
NO.	QUANTITIES BY " " MAR 95
	CHECKED BY K. HARRIS MAR 95

HERNANDEZ ELWOOD:::2410:DWG.MECHJMT034.FGB71 08JUN95-11:59:40

FED. ROAD DIST. NO.	STATE	FED. AID PROJ. NO.	FISCAL YEAR	SHEET NO.	TOTAL SHEETS
HAWAII	HAW.	I-H3-1(75) UNIT III	1994	288	353

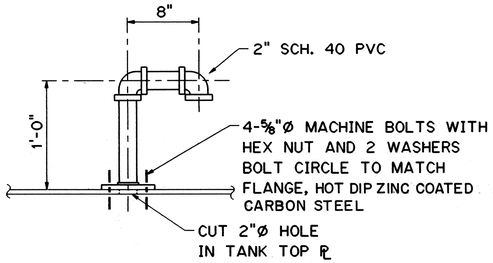

POTABLE WATER STORAGE TANK VENT DETAIL (8)

NO SCALE — 7M4 7M9 / 7M6

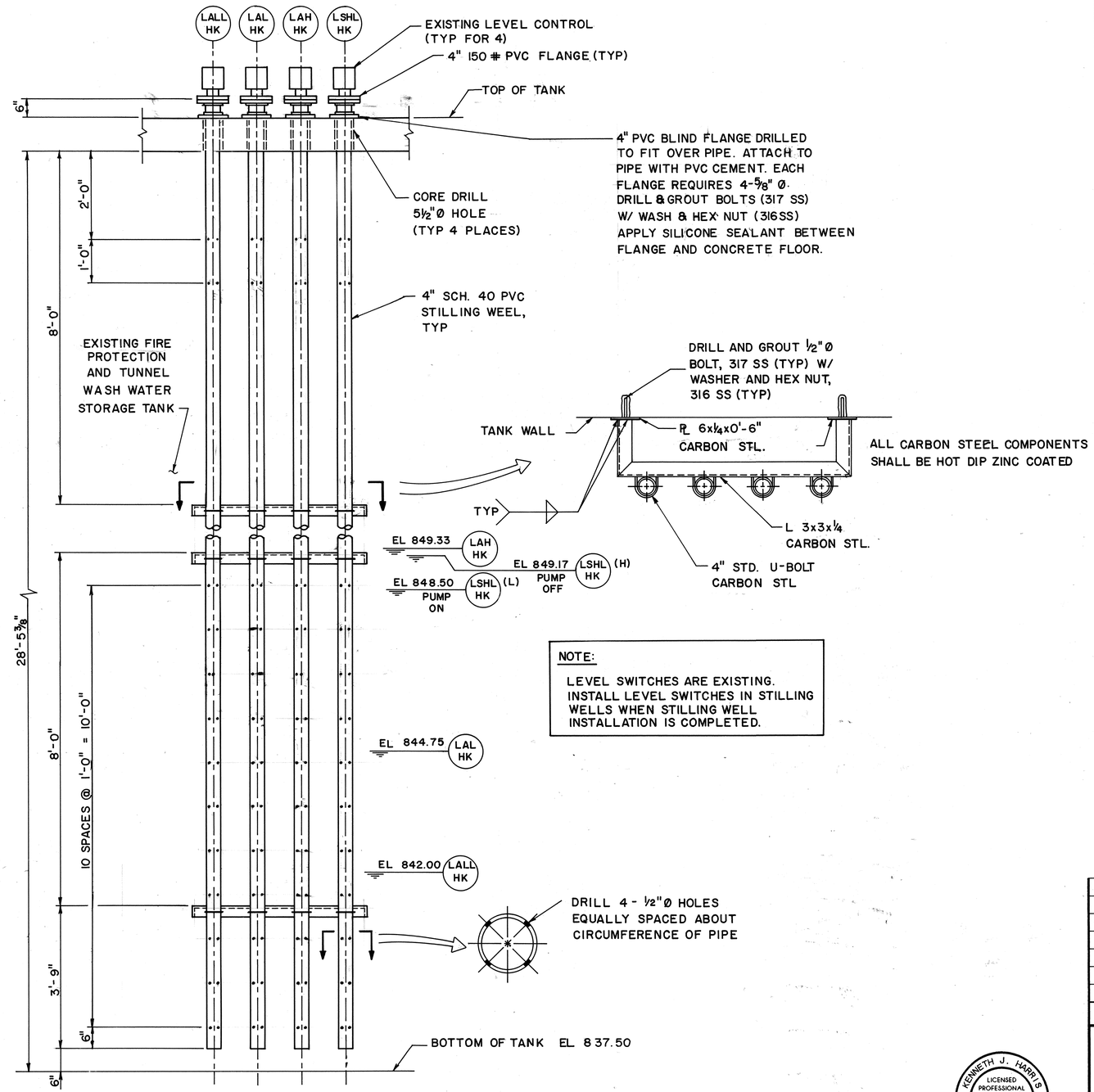

NOTE:

LEVEL SWITCHES ARE EXISTING. INSTALL LEVEL SWITCHES IN STILLING WELLS WHEN STILLING WELL INSTALLATION IS COMPLETED.

HAIKU PORTAL BUILDING - OB

LEVEL SWITCH AND ALARM MOUNTING DETAIL (9)

NO SCALE — 7M6 7M9

10/13/95	ADDENDUM I
DATE	REVISION

STATE OF HAWAII
DEPARTMENT OF TRANSPORTATION
HIGHWAYS DIVISION

POTABLE WATER TREATMENT - DETAILS 2

COMMON WORK
H-3 FINISH (UNIT III)
FAIP NO. I-H3-1(75), UNIT III
T.K. TUNNEL/ACCESS ROADS

SCALE: AS SHOWN — DATE: JUN 1995

SHEET NO. 7M9 OF 16 SHEETS

KENNETH J. HARRIS — LICENSED PROFESSIONAL ENGINEER — NO. 7707-M — HAWAII, U.S.A.

THIS WORK WAS PREPARED BY ME OR UNDER MY SUPERVISION

		DATE
SURVEY PLOTTED BY		
DRAWN BY	T. BURNS	MAR. 95
TRACED BY		
DESIGNED BY	D. DRYDEN	MAR. 95
QUANTITIES BY		
CHECKED BY	K. HARRIS	MAR. 95

ORIGINAL PLAN — NOTE BOOK — NO.

HERNANDEZ ELWOOD::24TO:IDWG.MECHJUT048.FGB71 08JUN95-13:16:40

ADD. 288

FED. ROAD DIST. NO.	STATE	FED. AID PROJ. NO.	FISCAL YEAR	SHEET NO.	TOTAL SHEETS
HAWAII	HAW.	I-H3-1(75) UNIT III	1994	289	353

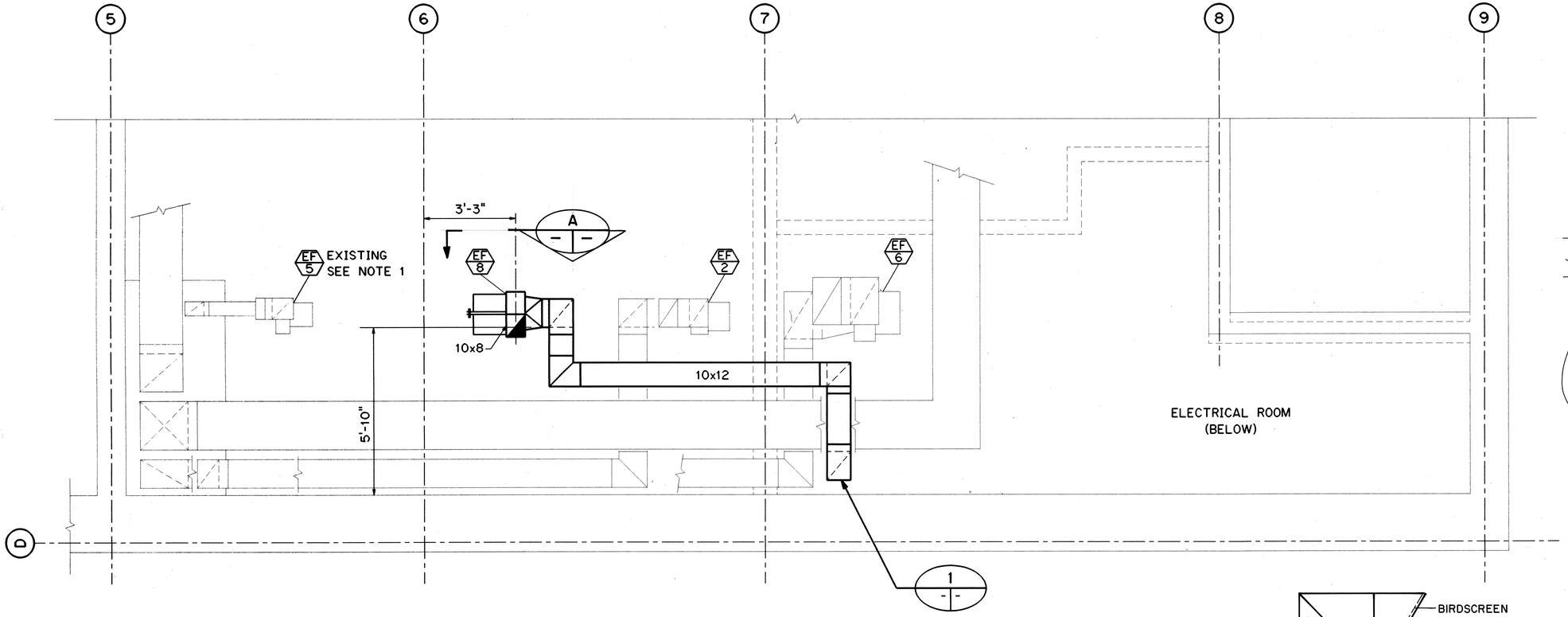

MECHANICAL ROOM PARTIAL PLAN
CONTROL BUILDING LEVEL 3

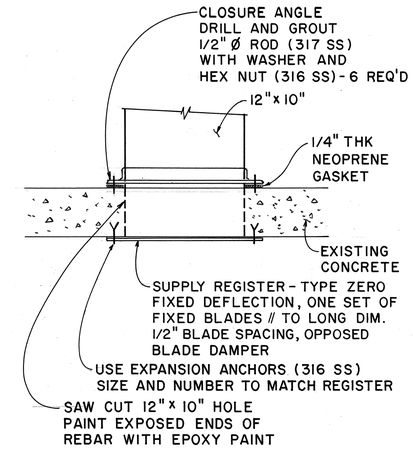

DETAIL 1
NO SCALE

NOTE:

1. EF-5 IS EXISTING REMOVE EXISTING PULLEYS AND MOTOR AND REPLACE WITH PARTS TO ACQUIRE DESIRED OPERATIONAL CHARACTERISTICS AS SHOWN IN SCHEDULE.

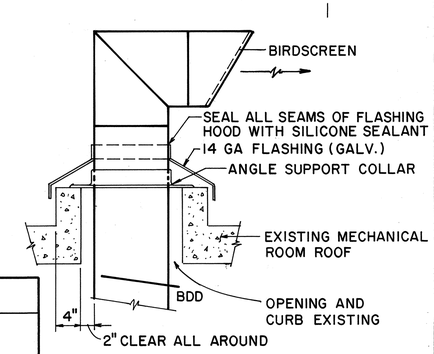

SECTION A
NO SCALE

FAN SCHEDULE

EQUIPMENT NUMBER	SERVICE	ARRANGEMENT	CLASS	DRIVE	WHEEL: DIAMETER (INCHES)	WHEEL: TYPE	WHEEL: RPM	PERFORMANCE: AIR CAPACITY ACFM	PERFORMANCE: STATIC PRESS H_2O IN.	MOTOR: NAME PLATE HP	MOTOR: RPM	MOTOR: VOLTS	MOTOR: PHASE	MOTOR: HERTZ	ISOLATOR BASE: TYPE	ISOLATOR BASE: STATIC DEFLEC IN.	REMARKS
EF-5	CONTROL BUILDING ELEVATOR MACHINE ROOM	-	-	BELT	-	-	2384	-	-	-	1800	115	1	60	-	-	EXIST. FAN, CHANGE PULLEYS & MOTOR
EF-8	CONTROL BUILDING ELECTRICAL ROOM - LEVEL 2	-	-	BELT	-	-	-	130	375	1/8	1800	115	1	60	-	-	

FOR DETAIL AS-BUILT INFORMATION REFER TO CONSTRUCTION SUBMITTALS

DATE	REVISION
10/13/95	ADDENDUM 1

KENNETH J. HARRIS LICENSED PROFESSIONAL ENGINEER NO. 7707-M HAWAII, U.S.A.

THIS WORK WAS PREPARED BY ME OR UNDER MY SUPERVISION

STATE OF HAWAII
DEPARTMENT OF TRANSPORTATION
HIGHWAYS DIVISION

CONTROL BLDG ELECTRICAL ROOM VENTILATION
COMMON WORK
H-3 FINISH (UNIT III)
FAIP NO. I-H3-1(75), UNIT III
T.K. TUNNEL/ACCESS ROADS

SCALE: 1/2" = 1'-0" DATE: JUN 1995

SHEET NO. 7M10 OF 16 SHEETS

ORIGINAL PLAN
SURVEY PLOTTED BY T. BURNS DATE MAR 95
DRAWN BY
TRACED BY
DESIGNED BY D. DRYDEN MAR 95
NOTE BOOK
QUANTITIES BY
CHECKED BY K. HARRIS MAR 95
NO.

HERNANDEZ ELWOOD:I:2410:DWG.MECHJM1046.FGB71 08JUN95-13:23:00

ADD. 289

FED. ROAD DIST. NO.	STATE	FED. AID PROJ. NO.	FISCAL YEAR	SHEET NO.	TOTAL SHEETS
HAWAII	HAW.	I-H3-1(75) UNIT III	1994	290	353

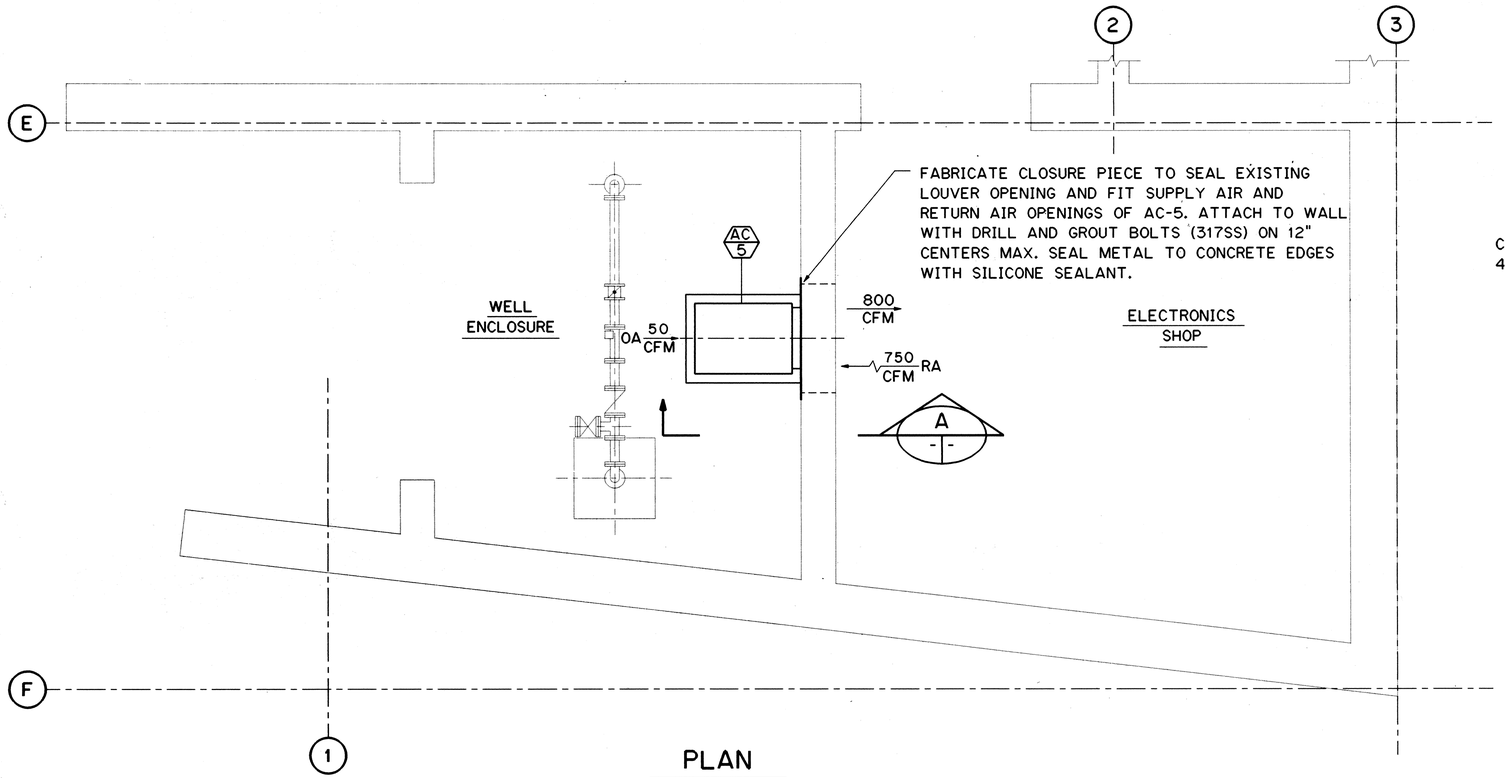

PLAN

SCALE: 3/8"=1'-0"

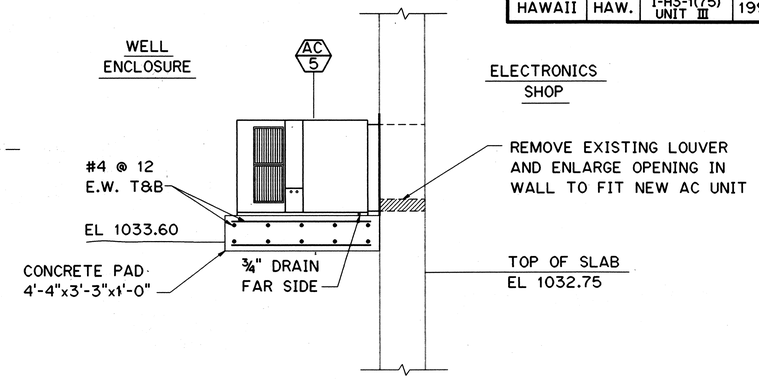

SECTION A

SCALE: 1/2" = 1'-0"

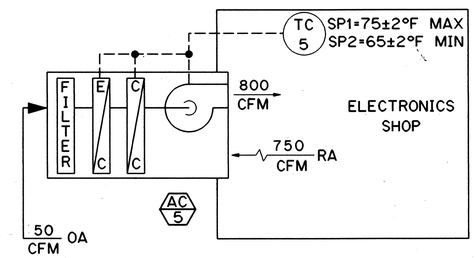

AIR FLOW AND CONTROL DIAGRAM

ENVIRONMENTAL AIR CONDITIONING UNIT (AC) SCHEDULE

ATM	ATMOSPHERIC	EAT	ENTERING AIR TEMPERATURE	FWB	°F WET BULB	SP	STATIC PRESSURE
BTUH	BTU/HR	EXT	EXTERNAL	LAT	LEAVING AIR TEMPTURE	VEL	VELOCITY
CFM	CUBIC FEET PER MINUTE	FDB	°F DRY BULB	QTY	QUANTITY		
DX	DIRECT EXPANSION	FPM	FEET PER MINUTE	REQD	REQUIRED		

NO.	AREA SERVED	TOTAL COOLING CAPACITY BTUH	FAN		COIL					HEATER		HUMIDIFIER		FILTER				RATED VOLTS/PH/HZ	POWER INPUT (KW)	WEIGHT LBS	REMARKS
			AIR FLOW CFM	EXT. SP IN. WG	TYPE	EAT		LAT		QTY REQD	KW	KW	LBS VAPOR PER HR	TYPE	MAX FACE VEL FPM	NO. AND SIZE	ATM DUST SPOT EFF				
						FDB	FWB	FDB	FWB												
AC 5	ELECTRONICS SHOP	30,000	800	0.5	DX	75	62	57	56	-	-	-	-	DISPOSABLE	300	-	50%	460/3/60	300	300	87° OUTDOOR DB

FOR DETAIL AS-BUILT INFORMATION REFER TO CONSTRUCTION SUBMITTALS

DATE	REVISION
10/13/95	ADDENDUM 1

GRAPHIC SCALES

2' 0' 2' 4' 6'
3/8" = 1'-0"

2' 1' 0' 2' 4'
1/2" = 1'-0"

KENNETH J. HARRIS LICENSED PROFESSIONAL ENGINEER NO. 7707-M HAWAII, U.S.A.

THIS WORK WAS PREPARED BY ME OR UNDER MY SUPERVISION

STATE OF HAWAII
DEPARTMENT OF TRANSPORTATION
HIGHWAYS DIVISION

CONTROL BUILDING
ELECTRONICS SHOP HVAC
COMMON WORK
H-3 FINISH (UNIT III)
FAIP NO. I-H3-1(75), UNIT III
T.K. TUNNEL/ACCESS ROADS

SCALE: AS NOTED DATE: JUN 1995

SHEET NO. 7M11 OF 16 SHEETS

ADD. 290

ORIGINAL PLOT SIZE 22"x34"
SURVEY PLOTTED BY — DATE
DRAWN BY T. BURNS — MAR 95
TRACED BY — DATE
DESIGNED BY D. DRYDEN — MAR 95
QUANTITIES BY — DATE
CHECKED BY K. HARRIS — MAR 95
NOTE BOOK — NO.

HERNANDEZ ELW0001:1241011DWG.MECH\M1047.FG871 08JUN95-15:35:20

FED. ROAD DIST. NO.	STATE	FED. AID PROJ. NO.	FISCAL YEAR	SHEET NO.	TOTAL SHEETS
HAWAII	HAW.	I-H3-1(75) UNIT III	1994	291	353

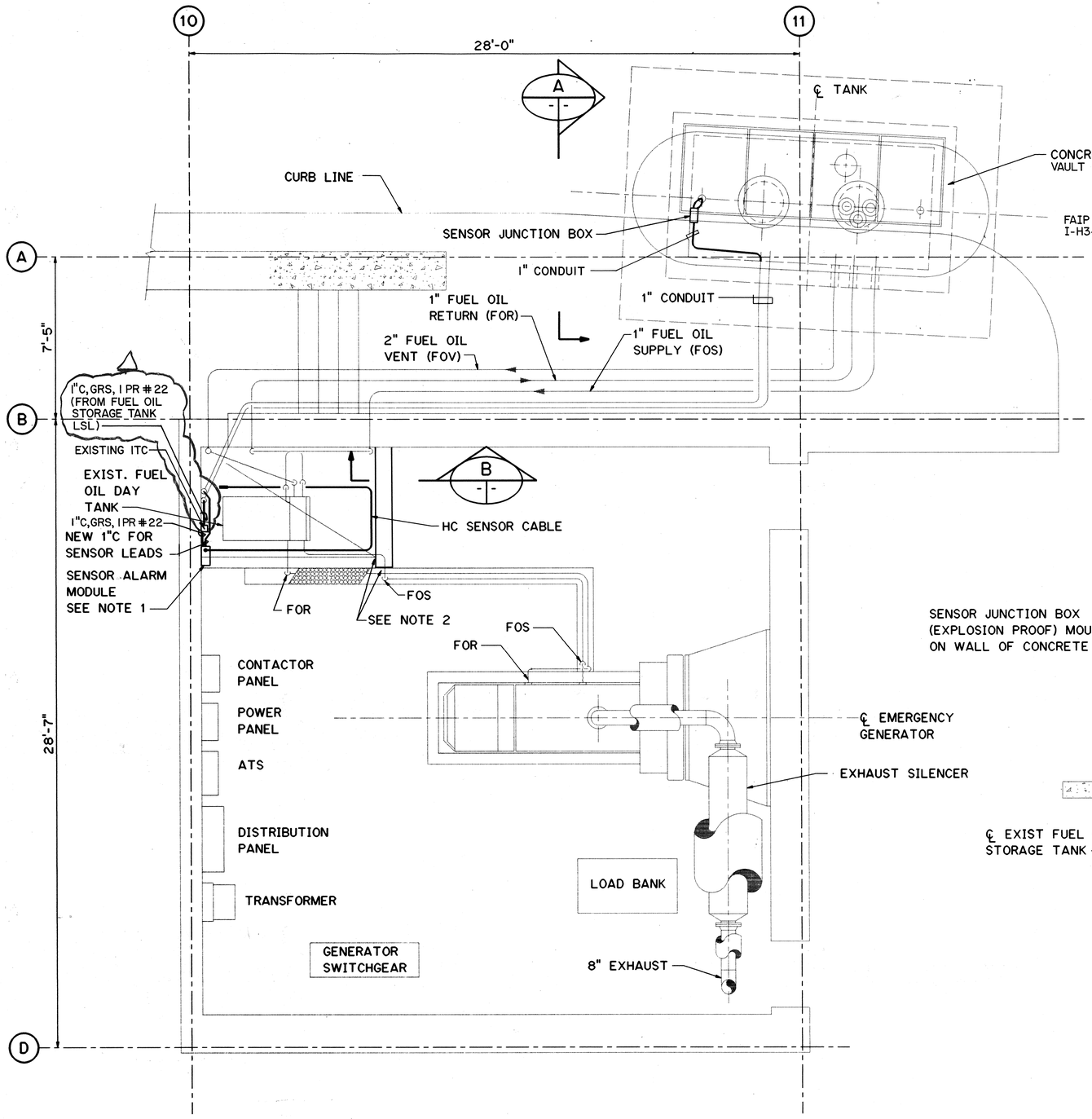

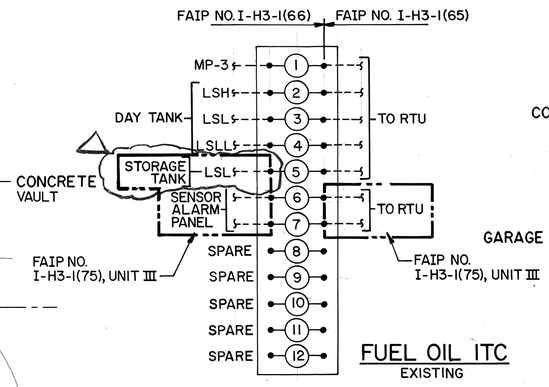

FUEL OIL ITC
EXISTING

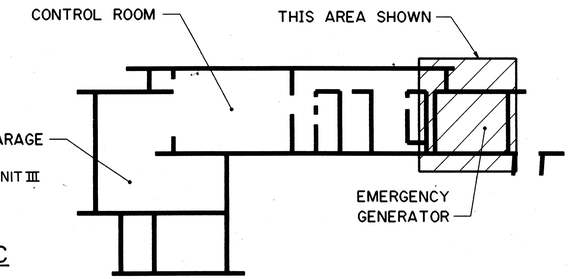

KEY PLAN
CONTROL BUILDING

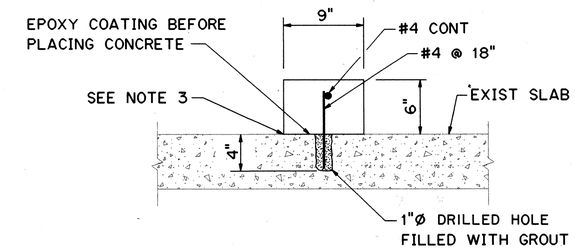

SECTION B
SCALE: 1½" = 1'-0"

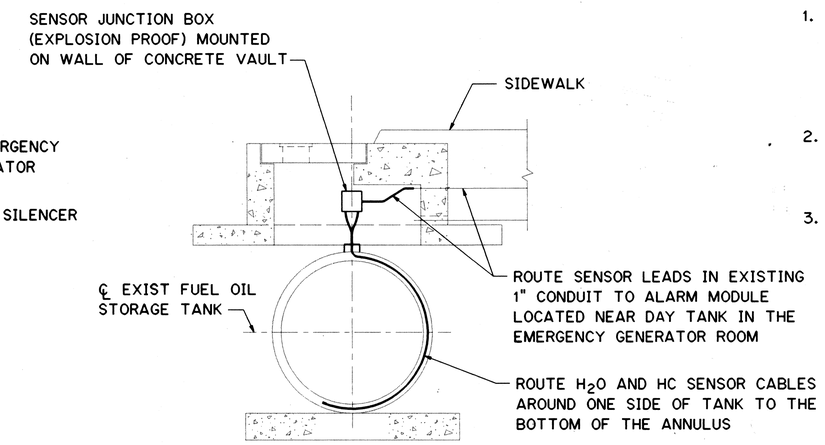

SECTION A
SCALE: 3/8" = 1'-0"

NOTES:

1. SENSOR ALARM PANEL SHALL BE MULTIPLE CHANNEL, SURFACE MOUNTED WITH LOCAL AUDIBLE ANNUNCIATION AND CONTACTS FOR SIGNAL TO ANNUNCIATOR LOCATED IN THE CONTROL CENTER.
2. AFTER CONCRETE CURES, SEAL AROUND FUEL OIL SUPPLY (FOS) PIPE WITH SILICONE SEALANT.
3. SEAL ALL SEAMS BETWEEN NEW AND EXIST. CONCRETE WITH SILICONE SEALANT AFTER CONCRETE CURES.

FOR DETAIL AS-BUILT INFORMATION REFER TO CONSTRUCTION SUBMITTALS

GRAPHIC SCALE
2' 0' 2' 4' 6'
3/8" = 1'-0"

STATE OF HAWAII
KENNETH J. HARRIS
LICENSED PROFESSIONAL ENGINEER
NO. 7702-M
HAWAII, U.S.A.

THIS WORK WAS PREPARED BY ME OR UNDER MY SUPERVISION

DATE	REVISION
5/1/97	DCN 75-017: INDICATED MONITOR WIRING FROM FUEL OIL STORAGE TANK LSL TO ITC
10/27/95	ADDENDUM 2-ADDED ITC DIAGRAM AND LOCATED ITC ON PLAN
10/13/95	ADDENDUM 1

STATE OF HAWAII
DEPARTMENT OF TRANSPORTATION
HIGHWAYS DIVISION

FUEL OIL SYSTEM
LEAK DETECTORS

COMMON WORK
H-3 FINISH (UNIT III)
FAIP NO. I-H3-1(75), UNIT III
T.K. TUNNEL/ACCESS ROADS

SCALE: 3/8" = 1'-0" DATE: JUN 1995

SHEET NO. 7M12 OF 16 SHEETS

ADD. 291

		DATE
SURVEY PLOTTED BY		
DRAWN BY	T. BURNS	MAR 95
TRACED BY		
DESIGNED BY	B. SNIDER/B	MAR 95
QUANTITIES BY		
CHECKED BY		

ORIGINAL PLAN
NOTE BOOK
NO.

HERNANDEZ ELWOOD:::2410:DWG.MECH\M1045.FGB71 08JUN95-13:35:40

FED. ROAD DIST. NO.	STATE	FED. AID PROJ. NO.	FISCAL YEAR	SHEET NO.	TOTAL SHEETS
HAWAII	HAW.	I-H3-1(75) UNIT III	1994	292	353

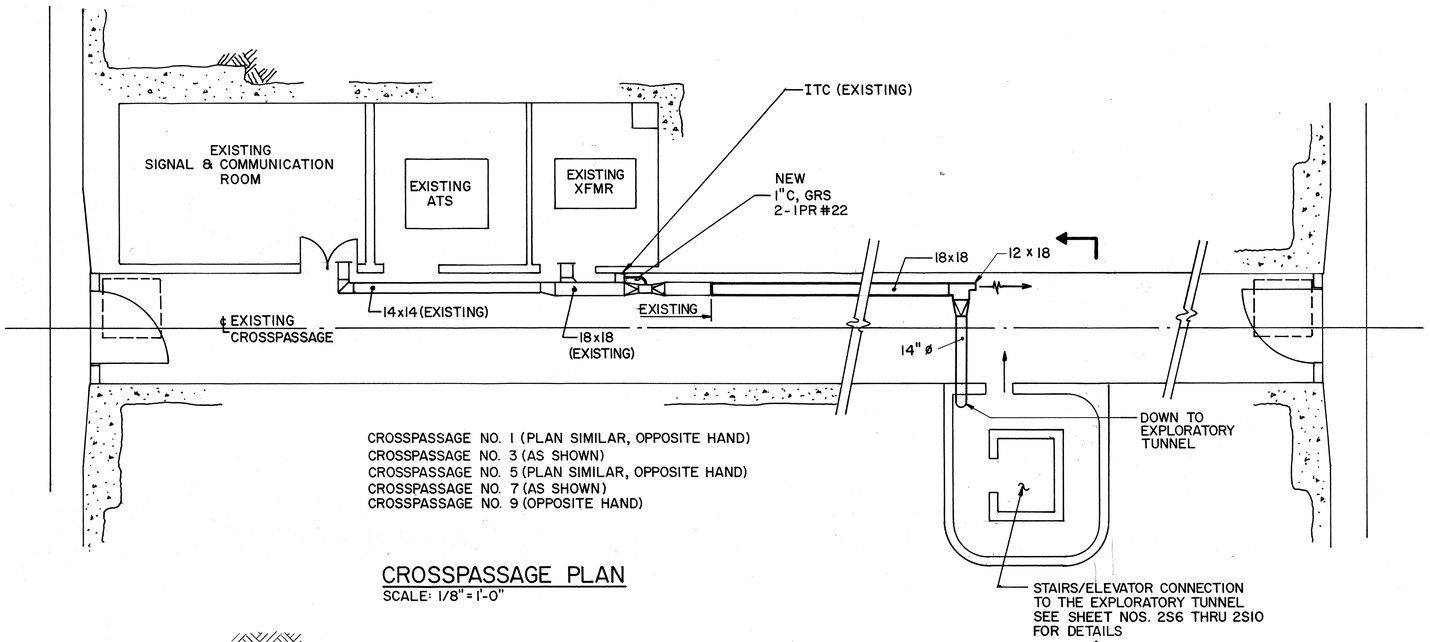

CROSSPASSAGE NO. 1 (PLAN SIMILAR, OPPOSITE HAND)
CROSSPASSAGE NO. 3 (AS SHOWN)
CROSSPASSAGE NO. 5 (PLAN SIMILAR, OPPOSITE HAND)
CROSSPASSAGE NO. 7 (AS SHOWN)
CROSSPASSAGE NO. 9 (OPPOSITE HAND)

CROSSPASSAGE PLAN

SCALE: 1/8" = 1'-0"

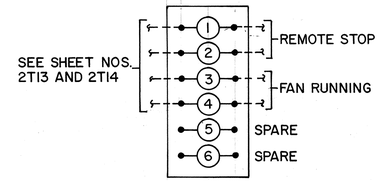

ITC NUMBER	CROSSPASSAGE NUMBER	EXHAUST FAN NUMBER
ITC-XP1	1	EF-23
ITC-XP3	3	EF-24
ITC-XP5	5	EF-25
ITC-XP7	7	EF-26
ITC-XP9	9	EF-27

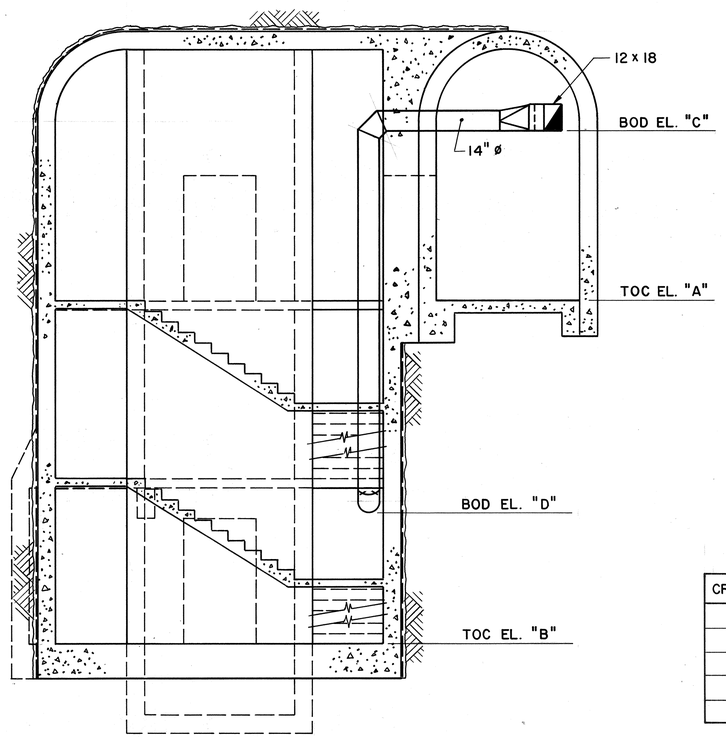

SECTION A

SCALE: 1/4" = 1'-0"

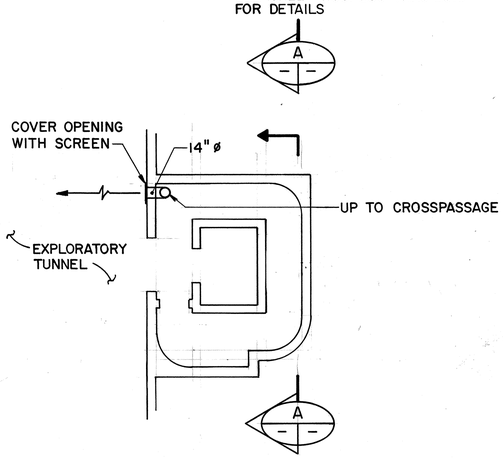

PLAN AT EXPLORATORY TUNNEL

CROSSPASSAGE	EL. "A"	EL. "B"	EL. "C"	EL. "D"
NO. 1	1043.39	1013.68	1052.89	1021.01
NO. 3	1037.26	1018.57	1046.76	1025.90
NO. 5	1001.47	970.66	1010.97	977.99
NO. 7	942.00	911.58	951.50	918.91
NO. 9	883.17	852.22	892.67	859.55

GRAPHIC SCALES
8' 4' 0' 8' 16'
1/8" = 1'-0"
4' 2' 0' 4' 8'
1/4" = 1'-0"

KENNETH J. HARRIS LICENSED PROFESSIONAL ENGINEER No. 7707-M HAWAII, U.S.A.

THIS WORK WAS PREPARED BY ME OR UNDER MY SUPERVISION

FOR DETAIL AS-BUILT INFORMATION REFER TO CONSTRUCTION SUBMITTALS

DATE	REVISION
10/27/95	ADDENDUM 2 - ADDED ITC

STATE OF HAWAII
DEPARTMENT OF TRANSPORTATION
HIGHWAYS DIVISION

CROSSPASSAGE VENTILATION

COMMON WORK

H-3 FINISH (UNIT III)
FAIP NO. I-H3-1(75), UNIT III
T.K. TUNNEL/ACCESS ROADS

SCALE: AS NOTED DATE: JUN 1995

SHEET NO. 7M13 OF 16 SHEETS

ORIGINAL PLAN		DATE
	SURVEY PLOTTED BY	
	DRAWN BY K. CHU	JUN 95
	TRACED BY	
	DESIGNED BY D. DRYDEN	MAY 95
NOTE BOOK	QUANTITIES BY	
No.	CHECKED BY K. HARRIS	JUN 95

ADD. 292

FED. ROAD DIST. NO.	STATE	FED. AID PROJ. NO.	FISCAL YEAR	SHEET NO.	TOTAL SHEETS
HAWAII	HAW.	I-H3-1(75) UNIT III	1994	292 S-1	353

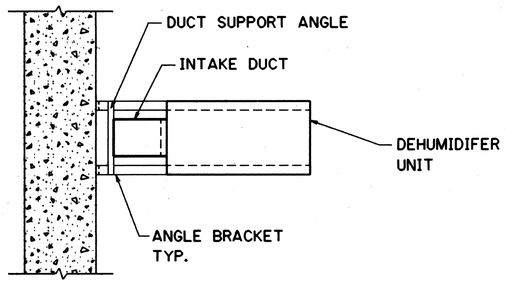

PLAN

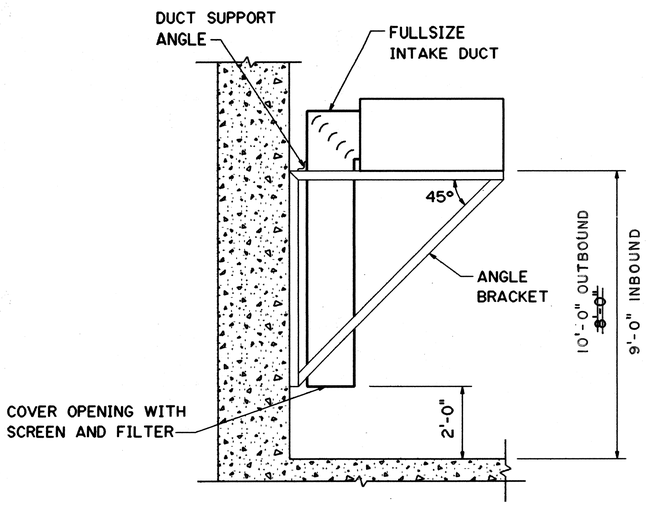

ELEVATION

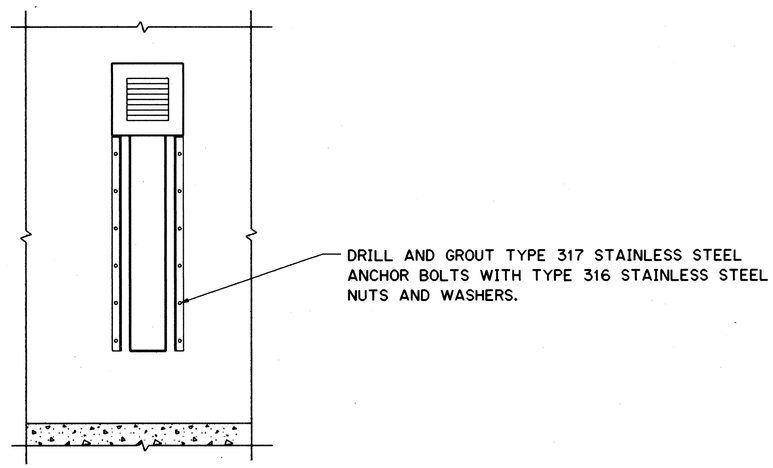

END VIEW

DEHUMIDIFER MOUNTING DETAIL (1)

NO SCALE

DEHUMIDIFIER SCHDULE				
TAG NO.	CAPACITY PINTS PER DAY	INLET AIR		REMARKS
		TEMP. DEGREES F	RELATIVE HUMIDITY %	
DH 1	134	77	63	115V, 1Ø PORTABLE
DH 2	35	65	50	208/230V, 1Ø
DH 3	42	65	50	208/230V, 1Ø

FOR DETAIL AS-BUILT INFORMATION REFER TO CONSTRUCTION SUBMITTALS

DATE	REVISION
10/13/95	ADDENDUM 1

STATE OF HAWAII
DEPARTMENT OF TRANSPORTATION
HIGHWAYS DIVISION

DEHUMIDIFIERS
DETAILS AND SCHEDULES
COMMON WORK
H-3 FINISH (UNIT III)
FAIP NO. I-H3-1(75), UNIT III
T.K. TUNNEL/ACCESS ROADS

SCALE: NONE DATE: OCT 1995

KENNETH J. HARRIS LICENSED PROFESSIONAL ENGINEER NO. 7707-M HAWAII, U.S.A.

THIS WORK WAS PREPARED BY ME OR UNDER MY SUPERVISION

SHEET NO. 7M13A OF 16 SHEETS

ORIGINAL PLAN	SURVEY PLOTTED BY	DATE
	DRAWN BY T.K. BURNS	OCT 95
NOTE BOOK	TRACED BY	" " OCT 95
	DESIGNED BY D.E. DRYDEN	" " OCT 95
NO.	QUANTITIES BY	" " OCT 95
	CHECKED BY K.J. HARRIS	

HERNANDEZ ELWOOD:::USER:[HERNANDEZ]MT907.FGB;1 EDITED 06OCT95-11.27.40

ADD. 292S-1

FED. ROAD DIST. NO.	STATE	FED. AID PROJ. NO.	FISCAL YEAR	SHEET NO.	TOTAL SHEETS
HAWAII	HAW.	I-H3-1(75) UNIT III	1994	292 S-2	353

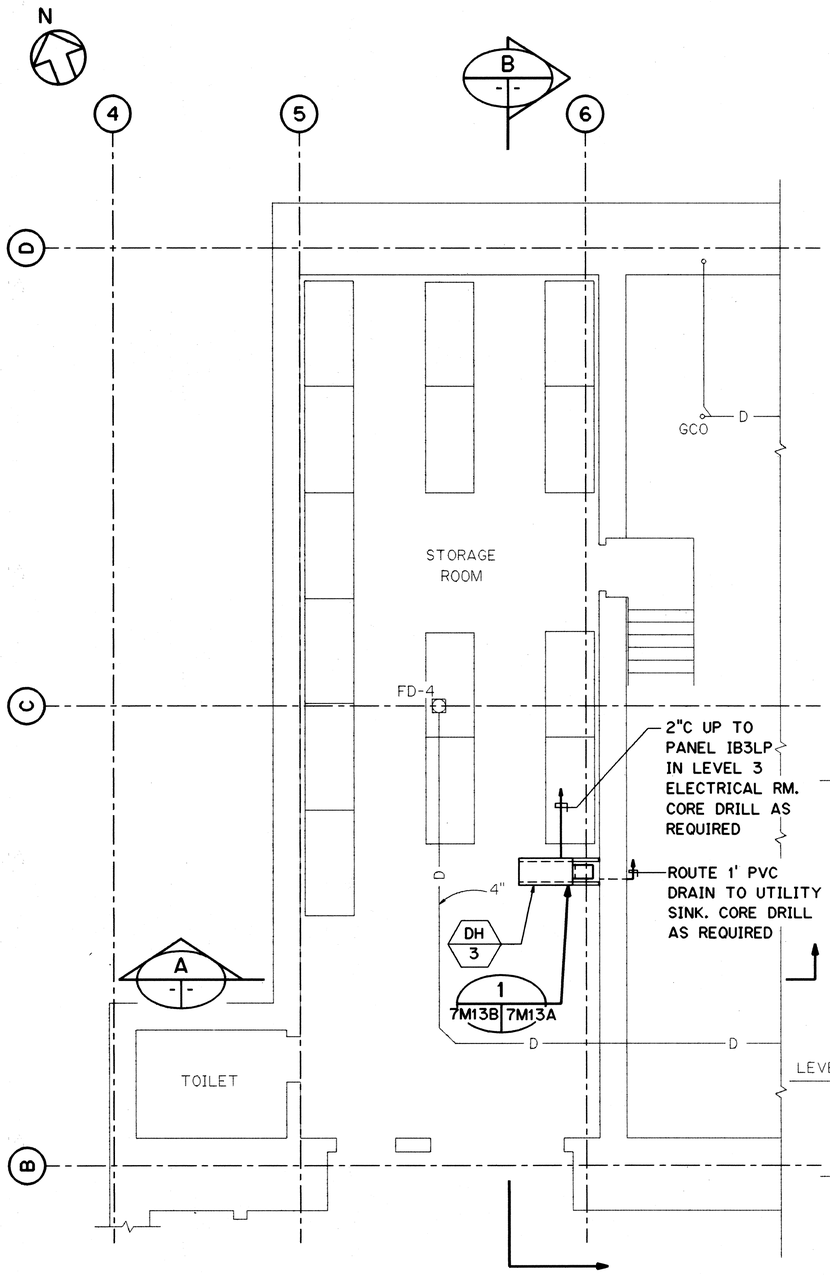

LEVEL A PLAN

SCALE: 3/16" = 1'-0"

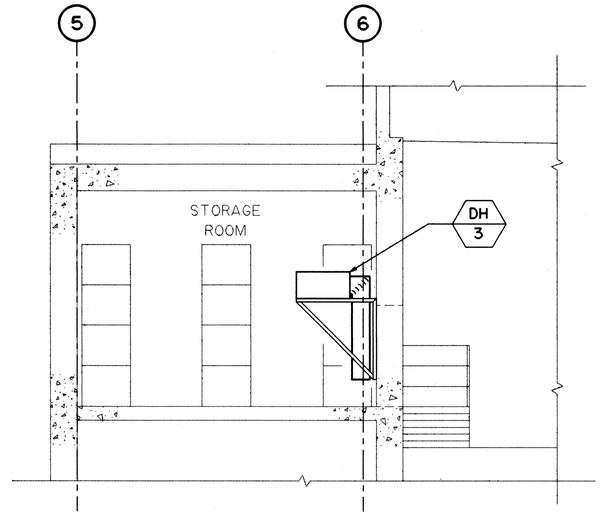

SECTION A

SCALE: 3/16" = 1'-0"

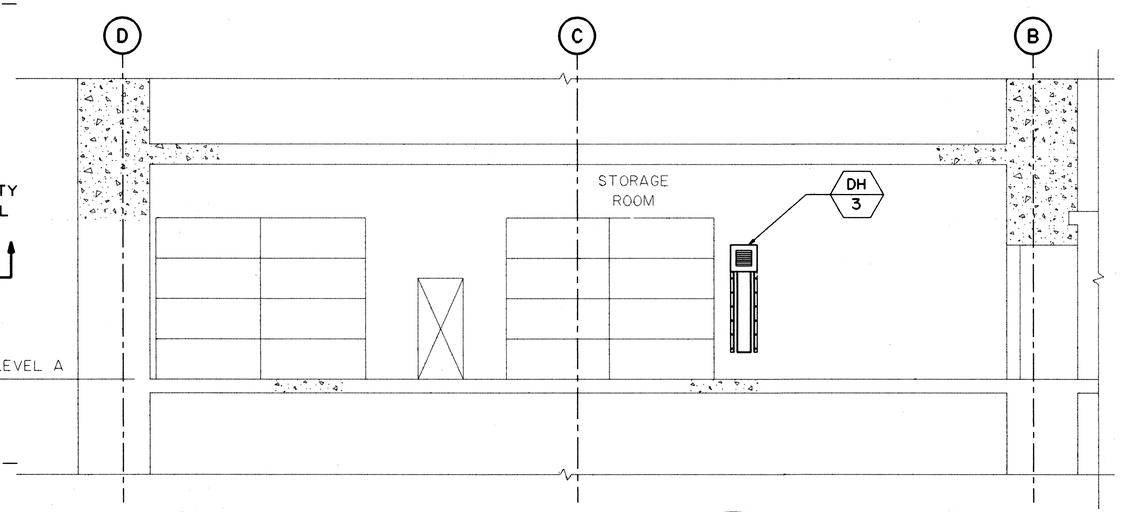

SECTION B

SCALE: 3/16" = 1'-0"

GRAPHIC SCALE

4' 0' 4' 8' 12'

3/16" = 1'-0"

KENNETH J. HARRIS
LICENSED PROFESSIONAL ENGINEER
NO. 7707-M
HAWAII, U.S.A.

THIS WORK WAS PREPARED BY ME OR UNDER MY SUPERVISION

DATE	REVISION
10/13/95	ADDENDUM I

STATE OF HAWAII
DEPARTMENT OF TRANSPORTATION
HIGHWAYS DIVISION

DEHUMIDIFIERS

HAIKU PORTAL BUILDING - IB

COMMON WORK

H-3 FINISH (UNIT III)

FAIP NO. I-H3-1(75), UNIT III

T.K. TUNNEL/ACCESS ROADS

SCALE: AS SHOWN DATE: OCT 1995

SHEET NO. 7M13B OF 16 SHEETS

		DATE
SURVEY PLOTTED BY		
TOPOGRAPHY BY	T.K. BURNS	OCT 95
TRACED BY		
DESIGNED BY	D.E. DRYDEN	OCT 95
QUANTITIES BY		
CHECKED BY	K.J. HARRIS	OCT 95

ORIGINAL PLAN

NOTE BOOK

NO.

HERNANDEZ ELWOOD:::USER:[HERNANDEZ]MT904.FGB;1 EDITED 06OCT95-11.22.40

ADD. 292S-2

FED. ROAD DIST. NO.	STATE	FED. AID PROJ. NO.	FISCAL YEAR	SHEET NO.	TOTAL SHEETS
HAWAII	HAW.	I-H3-1(75) UNIT III	1994	292 S-3	353

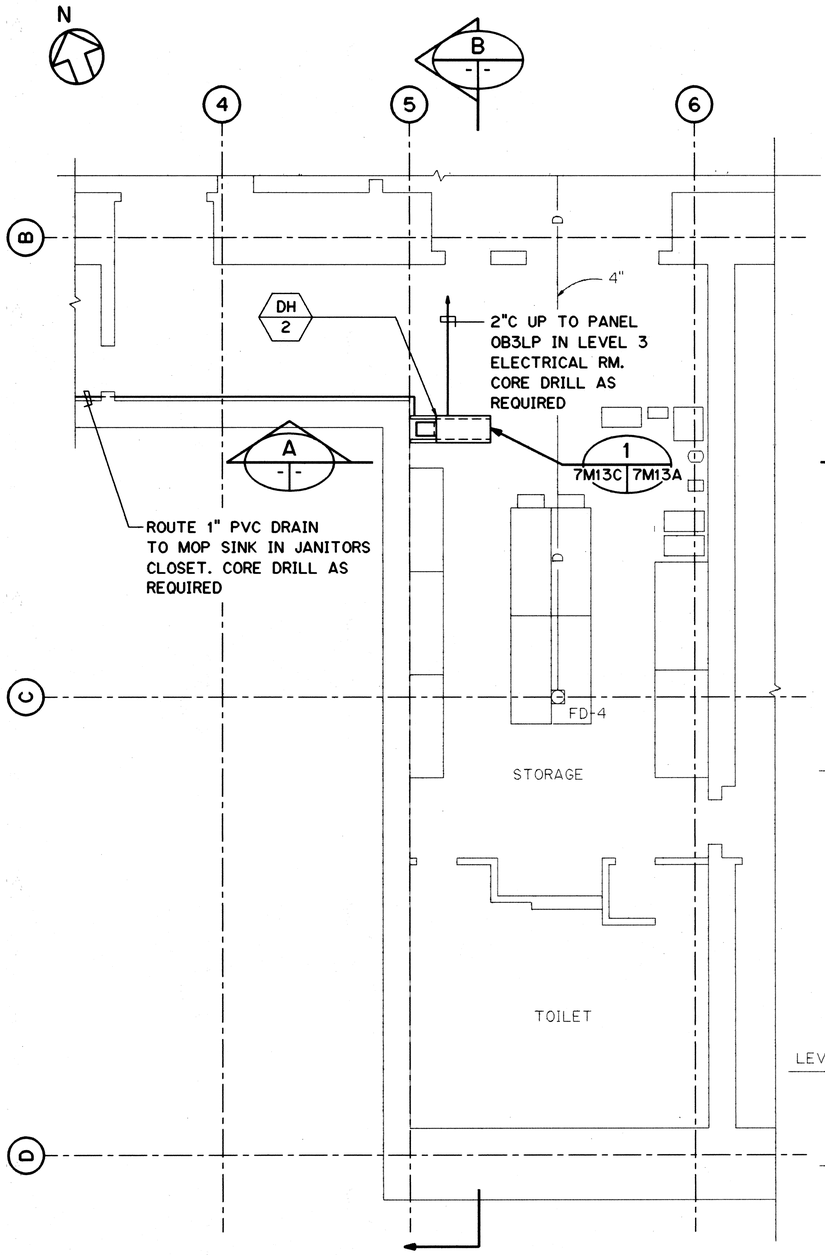

LEVEL A PLAN

SCALE: 3/16" = 1'-0"

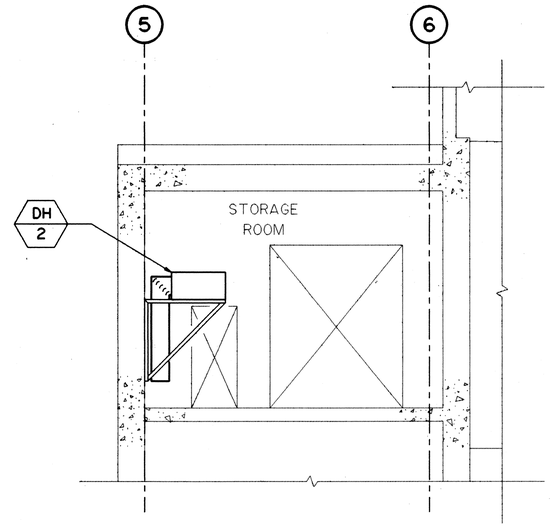

SECTION A

SCALE: 3/16" = 1'-0"

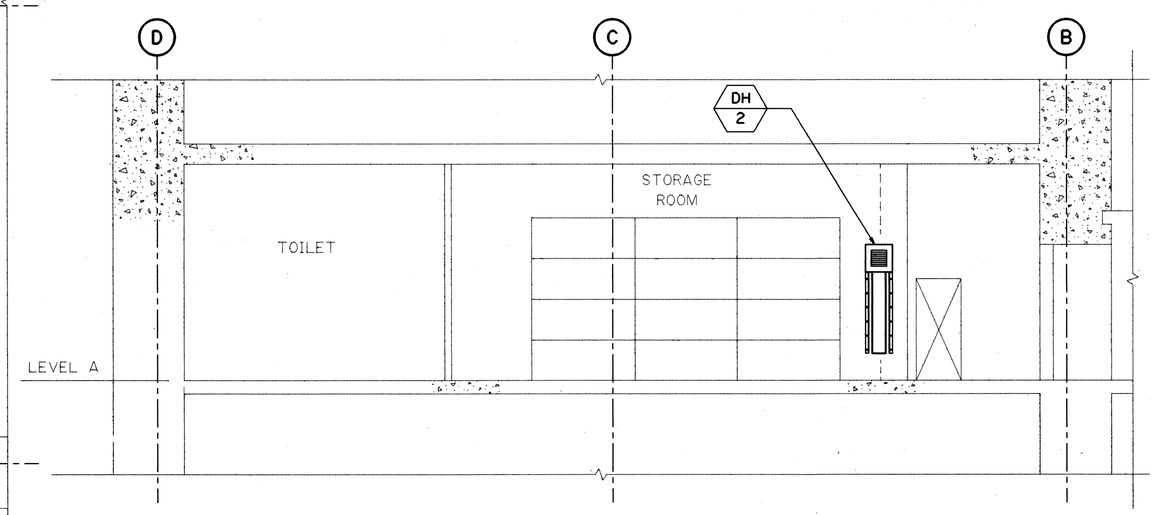

SECTION B

SCALE: 3/16" = 1'-0"

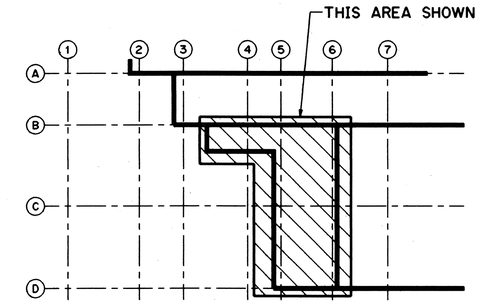

KEY PLAN

HAIKU OB PORTAL BUILDING
LEVEL A

GRAPHIC SCALE
4' 0' 4' 8' 12'
3/16" = 1'-0"

KENNETH J. HARRIS
LICENSED PROFESSIONAL ENGINEER
NO. 7707-M
HAWAII, U.S.A.

THIS WORK WAS PREPARED BY ME OR UNDER MY SUPERVISION

DATE	REVISION
10/13/95	ADDENDUM 1

STATE OF HAWAII
DEPARTMENT OF TRANSPORTATION
HIGHWAYS DIVISION

DEHUMIDIFIERS
HAIKU PORTAL BUILDING - OB
COMMON WORK
H-3 FINISH (UNIT III)
FAIP NO. I-H3-1(75), UNIT III
T.K. TUNNEL/ACCESS ROADS

SCALE: AS SHOWN DATE: OCT 1995

SHEET NO. 7M13C OF 16 SHEETS

ORIGINAL PLAN		SURVEY PLOTTED BY	DATE
		DRAWN BY T.K. BURNS	OCT 95
		TRACED BY "	OCT 95
NOTE BOOK		DESIGNED BY D.E. DRYDEN	OCT 95
		QUANTITIES BY "	OCT 95
NO.		CHECKED BY K.J. HARRIS	OCT 95

HERNANDEZ ELWOOD:::USER:[HERNANDEZ]MT905.FGB;1 EDITED 06OCT95-11.23.40

ADD. 292S-3

FED. ROAD DIST. NO.	STATE	FED. AID PROJ. NO.	FISCAL YEAR	SHEET NO.	TOTAL SHEETS
HAWAII	HAW.	I-H3-1(75) UNIT III	1994	292 S-4	353

N

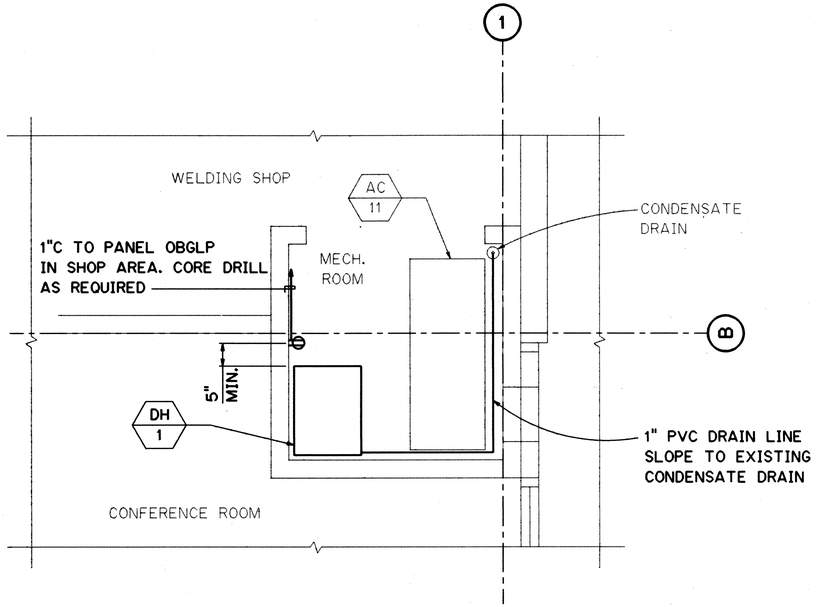

LEVEL A PLAN

SCALE: ½" = 1'-0"

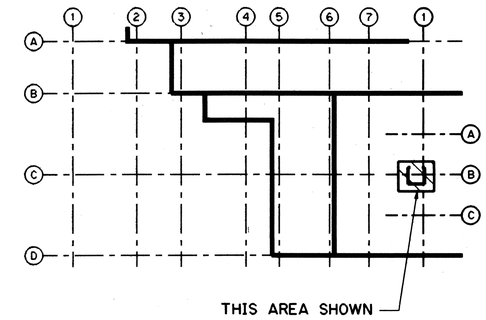

KEY PLAN

HAIKU OB PORTAL BUILDING
LEVEL A

NOTES:

1. RUN EQUIPMENT DRAIN HOSE TO NEW DRAIN LINE.

2. DRILL AND GROUT TYPE 317 STAINLESS STEEL ANCHOR BOLTS WITH TYPE 316 STAINLESS STEEL NUTS AND WASHERS.

GRAPHIC SCALE
2' 1' 0' 2' 4'
½" = 1'-0"

KENNETH J. HARRIS
LICENSED PROFESSIONAL ENGINEER
NO. 7707-M
HAWAII, U.S.A.

THIS WORK WAS PREPARED BY ME OR UNDER MY SUPERVISION

DATE	REVISION
10/13/95	ADDENDUM 1

STATE OF HAWAII
DEPARTMENT OF TRANSPORTATION
HIGHWAYS DIVISION

DEHUMIDIFIERS
HAIKU PORTAL MECH. RM.-OB
COMMON WORK
H-3 FINISH (UNIT III)
FAIP NO. I-H3-1(75), UNIT III
T.K. TUNNEL/ACCESS ROADS

SCALE: AS SHOWN DATE: OCT 1995

SHEET NO. 7M13D OF 16 SHEETS

ORIGINAL PLAN		DATE
	SURVEY / PLOTTED BY	
	DRAWN BY T.K. BURNS	OCT 95
	TRACED BY	
NOTE BOOK	DESIGNED BY D.E. DRYDEN	OCT 95
	QUANTITIES BY	
NO.	CHECKED BY K.J. HARRIS	OCT 95

HERNANDEZ ELWOOD:::USER:[HERNANDEZ]MT906.FGB;1 EDITED 06OCT95-11.25.20

ADD. 292S-4

FED. ROAD DIST. NO.	STATE	FED. AID PROJ. NO.	FISCAL YEAR	SHEET NO.	TOTAL SHEETS
HAWAII	HAW.	I-H3-1(75) UNIT III	1994	292 S-5	353

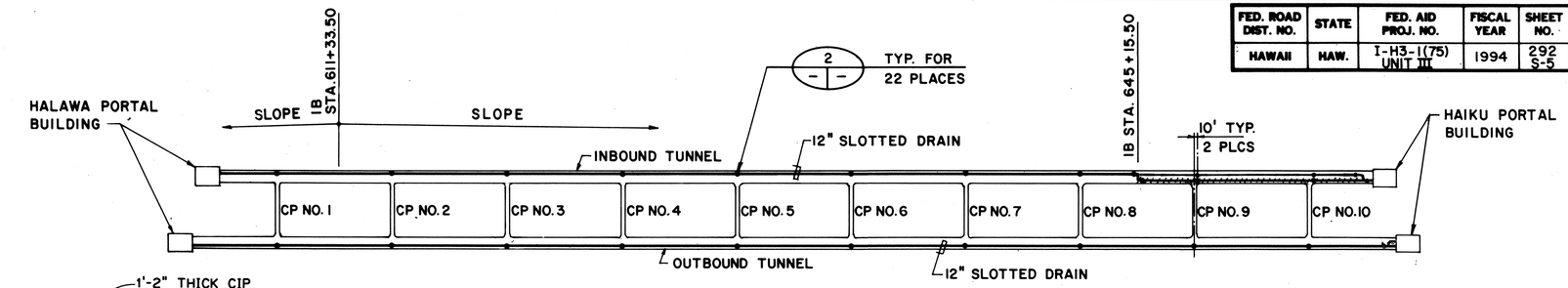

SLOTTED DRAIN CLEANOUT LOCATION PLAN

SCALE: NONE

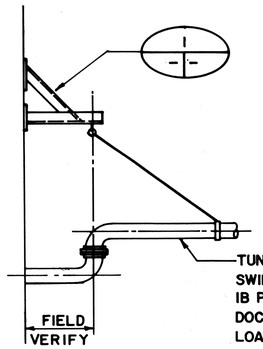

WORK NOT INCLUDED IN CONTRACT I-H3-1(75), UNIT III

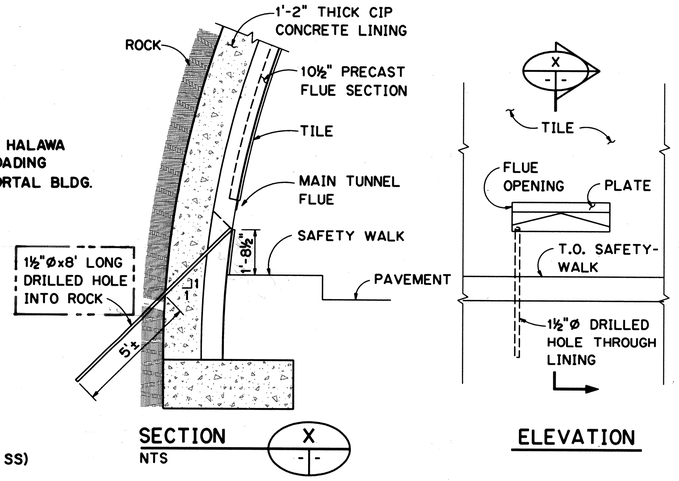

SECTION X
NTS

ELEVATION

TUNNEL FLUE WEEP DETAIL

NOTE:

1. TUNNEL FLUES LOCATED IN EXISTING NORTHSIDE IB AND SOUTHSIDE OB TUNNELS.
2. FIELD VERIFY LOCATION OF EMBEDDED CONDUIT AND PIPE IN EXISTING CONCRETE LINING PRIOR TO DRILLING HOLE.

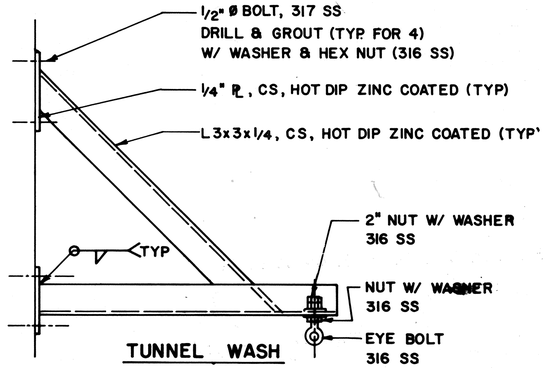

TUNNEL WASH TRUCK ARM BRACKET

DETAIL 1

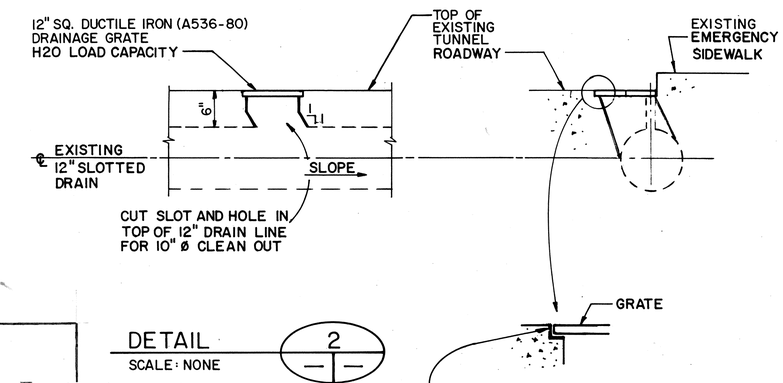

DETAIL 2
SCALE: NONE

INSTALL 1"x1"x 3/16" LEDGE ANGLE, SET IN PLACE WITH EPOXY GROUT. ANGLE SHALL BE CARBON STEEL, HOT DIP ZINC COATED.

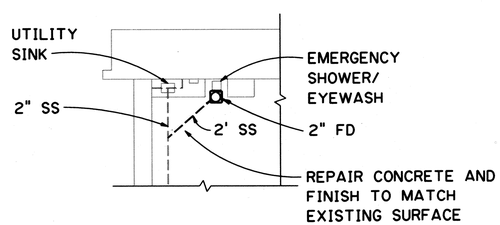

O & N FACILITY SHOP PARTIAL PLAN FLOOR DRAIN INSTALLATION

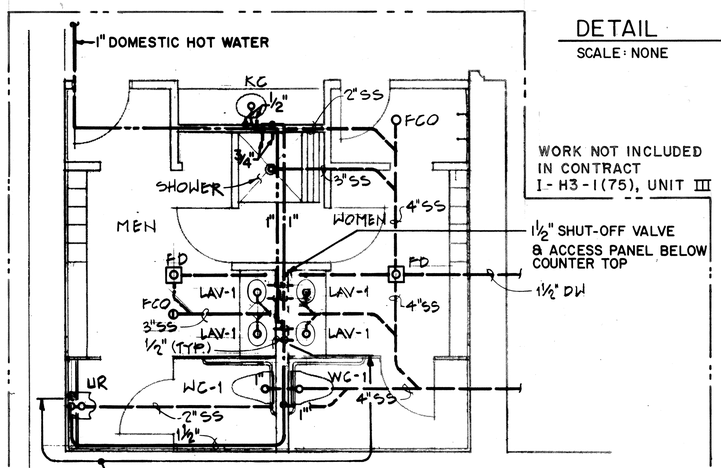

WORK NOT INCLUDED IN CONTRACT I-H3-1(75), UNIT III

REPLACE EXISTING 1" COPPER DOMESTIC COLD WATER LINE TO URINAL WITH 1-1/2" COPPER AS SHOWN. REPAIR AND RESTORE CEILING AND WALLS DAMAGED DURING THE REPLACEMENT PROCEDURE TO MATCH EXISTING CONDITIONS. ALL OTHER INFORMATION SHOWN ON THIS PARTIAL PLAN IS EXISTING AND IS NOT PART OF THIS CONTRACT.

HAIKU OB PORTAL BLDG. TOILET PARTIAL PLAN

SCALE: NONE

FOR DETAIL AS-BUILT INFORMATION REFER TO CONSTRUCTION SUBMITTALS

DATE	REVISION
10/27/95	ADDENDUM 2 - ADDED TUNNEL FLUE WEEP AND O&M SHOP FLOOR DRAIN DETAILS
10/13/95	ADDENDUM 1

KENNETH J. HARRIS LICENSED PROFESSIONAL ENGINEER No. 7707-M HAWAII, U.S.A.

THIS WORK WAS PREPARED BY ME OR UNDER MY SUPERVISION

STATE OF HAWAII
DEPARTMENT OF TRANSPORTATION
HIGHWAYS DIVISION

MISCELLANEOUS WORK ITEMS

COMMON WORK

H-3 FINISH (UNIT III)
FAIP NO. I-H3-1(75), UNIT III
T.K. TUNNEL/ACCESS ROADS

SCALE: NONE DATE: OCT 1995

SHEET NO. 7M13E OF 16 SHEETS

ORIGINAL PLAN | SURVEY PLOTTED BY | DRAWN BY | TRACED BY | DESIGNED BY | QUANTITIES BY | CHECKED BY | NOTE BOOK | No. | DATE

ADD. 292 S-5

FED. ROAD DIST. NO.	STATE	FED. AID PROJ. NO.	FISCAL YEAR	SHEET NO.	TOTAL SHEETS
HAWAII	HAW.	I-H3-1(75) UNIT III	1994	293	353

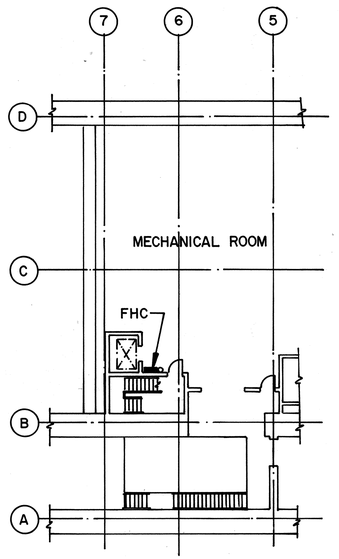

LEVEL 2 PARTIAL PLAN

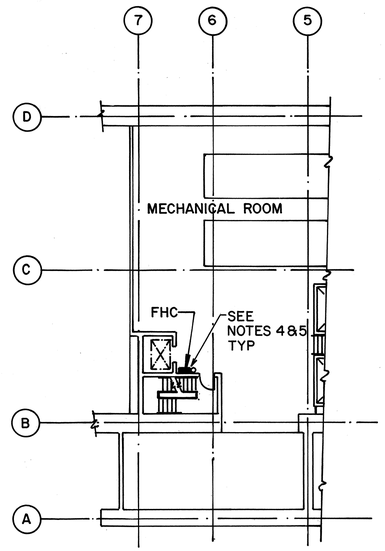

LEVEL 3 PARTIAL PLAN

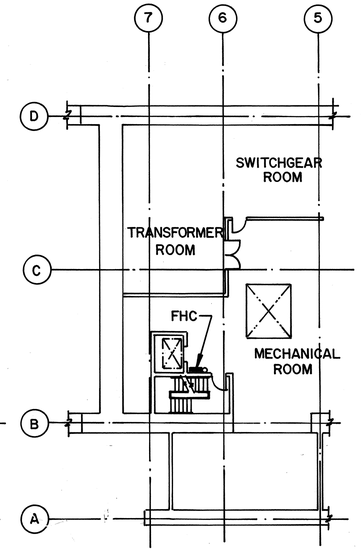

LEVEL 4 PARTIAL PLAN

HALAWA INBOUND PORTAL BUILDING

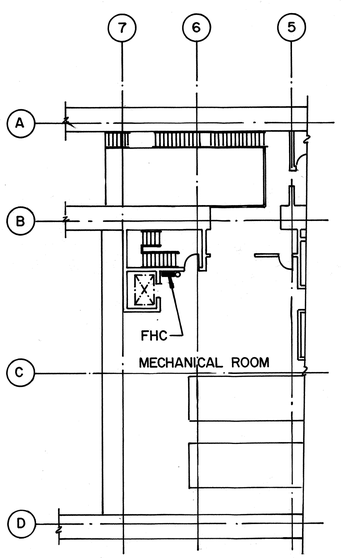

LEVEL 2 PARTIAL PLAN

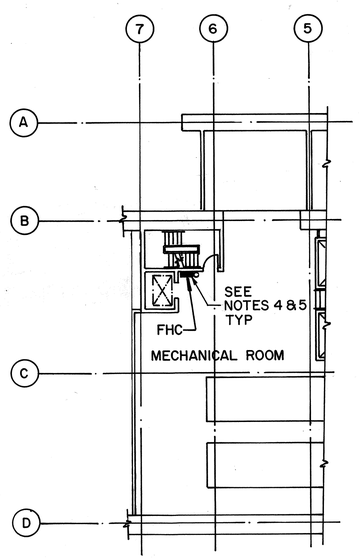

LEVEL 3 PARTIAL PLAN

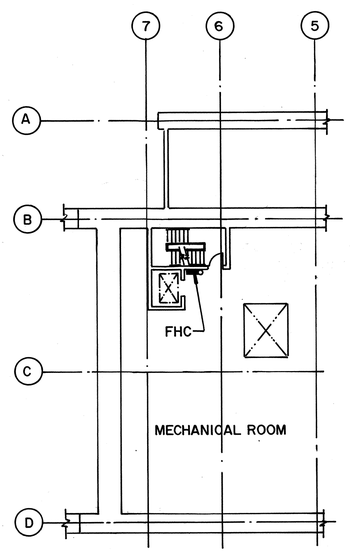

LEVEL 4 PARTIAL PLAN

HALAWA OUTBOUND PORTAL BUILDING

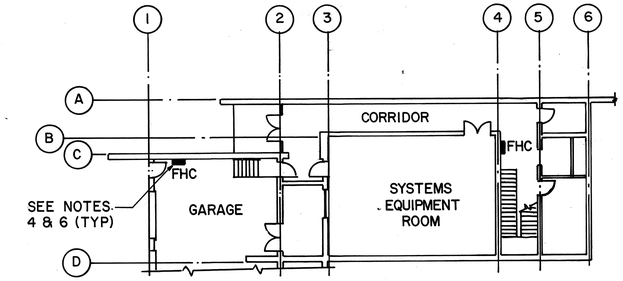

LEVEL 1 PARTIAL PLAN

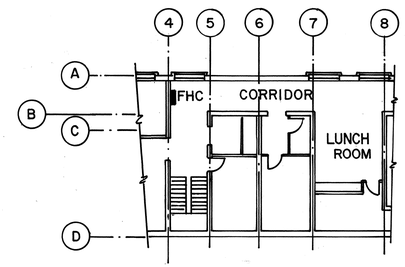

LEVEL 2 PARTIAL PLAN

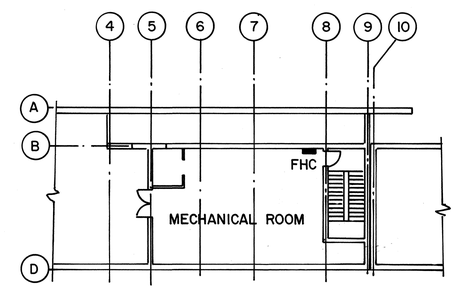

LEVEL 3 PARTIAL PLAN

CONTROL BUILDING

NOTES

1. FHC FIRE HOSE CABINET
2. 2½" VALVES SHALL BE SET AT 150 PSIG DOWNSTREAM PRESSURE.
3. 1½" VALVES SHALL BE SET AT 100 PSIG DOWNSTREAM PRESSURE.
4. THIS PLAN IDENTIFIES LOCATION OF FIRE HOSE CABINETS WITH VALVES REQUIRING CALIBRATION.
5. FIRE HOSE CABINETS IN PORTAL BUILDINGS CONTAIN ONE 2½" VALVE AND ONE 1½" VALVE.
6. FIRE HOSE CABINETS IN CONTROL BUILDING CONTAIN ONE 1½" VALVE.

FOR DETAIL AS-BUILT INFORMATION REFER TO CONSTRUCTION SUBMITTALS

DATE	REVISION

KENNETH J. HARRIS LICENSED PROFESSIONAL ENGINEER No. 7707-M HAWAII, U.S.A.

THIS WORK WAS PREPARED BY ME OR UNDER MY SUPERVISION

STATE OF HAWAII
DEPARTMENT OF TRANSPORTATION
HIGHWAYS DIVISION

PRESSURE REDUCING HOSE VALVE TESTING AND CALIBRATION - I

COMMON WORK

H-3 FINISH (UNIT III)
FAIP NO. I-H3-1(75), UNIT III
T.K. TUNNEL/ACCESS ROADS

SCALE: NONE DATE: JUN 1995

SHEET NO. 7M14 OF 16 SHEETS

ORIGINAL PLAN		DATE
SURVEY PLOTTED BY		
DRAWN BY	D. E. DRYDEN	OCT 94
TRACED BY		
DESIGNED BY	D. E. DRYDEN	OCT 94
QUANTITIES BY		
CHECKED BY	K. J. HARRIS	JAN 95
NOTE BOOK		
No.		

FED. ROAD DIST. NO.	STATE	FED. AID PROJ. NO.	FISCAL YEAR	SHEET NO.	TOTAL SHEETS
HAWAII	HAW.	I-H3-1(75) UNIT III	1994	294	353

N

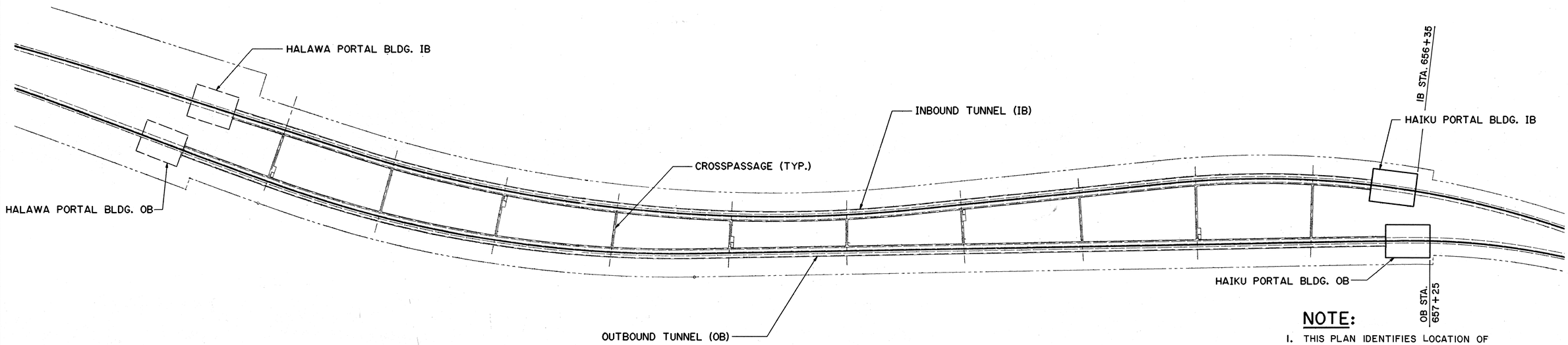

NOTE:

1. THIS PLAN IDENTIFIES LOCATION OF VALVE STATIONS (VS) CONTAINING VALVES REQUIRING CALIBRATION.
2. 2½" VALVES SHALL BE SET AT 150 PSIG DOWNSTREAM PRESSURE.
3. 1½" VALVES SHALL BE SET AT 100 PSIG DOWNSTREAM PRESSURE.
4. EACH VALVE STATION (VS) INDICATED CONTAINS ONE 2½" VALVE AND ONE 1½" VALVE.

IB TUNNEL

VS NO.	VS LOCATION	VS SIZE	VB LOCATION	VB NO.
1	606+17	B	-	
2	607+20	B	-	
3	608+45	A	608+44.25	1
4	609+70	B	-	
5	610+95	B	-	
6	612+03.708	B	-	
7	613+30	A	613+29.25	2
8	614+55	B	-	
9	615+80	B	-	
10	616.88.708	B	-	
11	618+15	A	618+14.25	3
12	619+40	B	-	
13	620+65	B	-	
14	621+73.708	B	-	
15	623+00	A	622+99.25	4
16	624+25	B	-	
17	625+50	B	-	
18	62+58.708	B	-	
19	627+85	A	627+84.25	5
20	629+10	B	-	
21	630+35	B	-	
22	631+58.708	B	-	
23	632+75	A	632+74.25	6
24	634+00	B	-	
25	635+25	B	-	

IB TUNNEL

VS NO.	VS LOCATION	VS SIZE	VB LOCATION	VB NO.
26	636+38.708	B	-	
27	637+65	A	637+64.25	7
28	638+90	B	-	
29	640+15	B	-	
30	641+38.708	B	-	
31	642+65	A	642+64.25	8
32	643+90	B	-	
33	645+15	B	-	
34	646+37.7	B	-	
35	647+65	A	647+64.25	9
36	648+90	B	-	
37	650+15	B	-	
38	651+38.708	B	-	
39	652+65	A	652+64.25	10
40	653+90	B	-	
41	655+13	B	-	

OB TUNNEL

VS NO.	VS LOCATION	VS SIZE	VB LOCATION	VB NO.
1	604+32	B	-	
2	605+60	B	-	
3	606+85	B	-	
4	608+10	A	608+09.25	1
5	609+35	B	-	
6	610+60	B	-	
7	611+83.708	B	-	
8	613+10	A	613+09.25	2
9	614+35	B	-	
10	615+60	B	-	
11	616+83.708	B	-	
12	618+10	A	618+09.25	3
13	619+35	B	-	
14	620+60	B	-	
15	621+83.708	B	-	
16	623+10	A	623+09.25	4
17	624+35	B	-	
18	625+60	B	-	
19	626+83.708	B	-	
20	628+10	A	628+09.25	5
21	629+35	B	-	
22	630+60	B	-	
23	631+83.708	B	-	
24	633+10	A	633+09.25	6
25	634+35	B	-	

OB TUNNEL

VS NO.	VS LOCATION	VS SIZE	VB LOCATION	VB NO.
26	635+60	B	-	
27	636+83.708	B	-	
28	638+10	A	638+09.25	7
29	639+35	B	-	
30	640+60	B	-	
31	641+83.708	B	-	
32	643+10	A	643+09.25	8
33	644+35	B	-	
34	645+60	B	-	
35	646+73.708	B	-	
36	648+00	A	647+99.25	9
37	649+25	B	-	
38	650+50	B	-	
39	651+58.708	B	-	
40	652+85	A	652+84.25	10
41	654+10	B	-	
			-	
			-	
42	655+35	B	-	
43	656+03	B	-	

DATE	REVISION

KENNETH J. HARRIS
LICENSED PROFESSIONAL ENGINEER
No. 7707-M
HAWAII, U.S.A.

THIS WORK WAS PREPARED BY ME OR UNDER MY SUPERVISION

STATE OF HAWAII
DEPARTMENT OF TRANSPORTATION
HIGHWAYS DIVISION

PRESSURE REDUCING HOSE VALVE TESTING AND CALIBRATION - 2

COMMON WORK

H-3 FINISH (UNIT III)
FAIP NO. I-H3-1(75), UNIT III
T.K. TUNNEL/ACCESS ROADS

SCALE: NONE DATE: JUN 1995

SHEET NO. 7M15 OF 16 SHEETS

ORIGINAL PLAN
NOTE BOOK NO.
SURVEY PLOTTED BY OAD DATE OCT 94
TRACED BY " OCT 94
DESIGNED BY D. F. DRYDEN
QUANTITIES BY " OCT 94
CHECKED BY K. J. HARRIS JAN 95

2410V161 2410: V161 MS0052.FGB:1 100CT89-11.51.40

FED. ROAD DIST. NO.	STATE	FED. AID PROJ. NO.	FISCAL YEAR	SHEET NO.	TOTAL SHEETS
HAWAII	HAW.	I-H3-1(75) UNIT III	1994	295	353

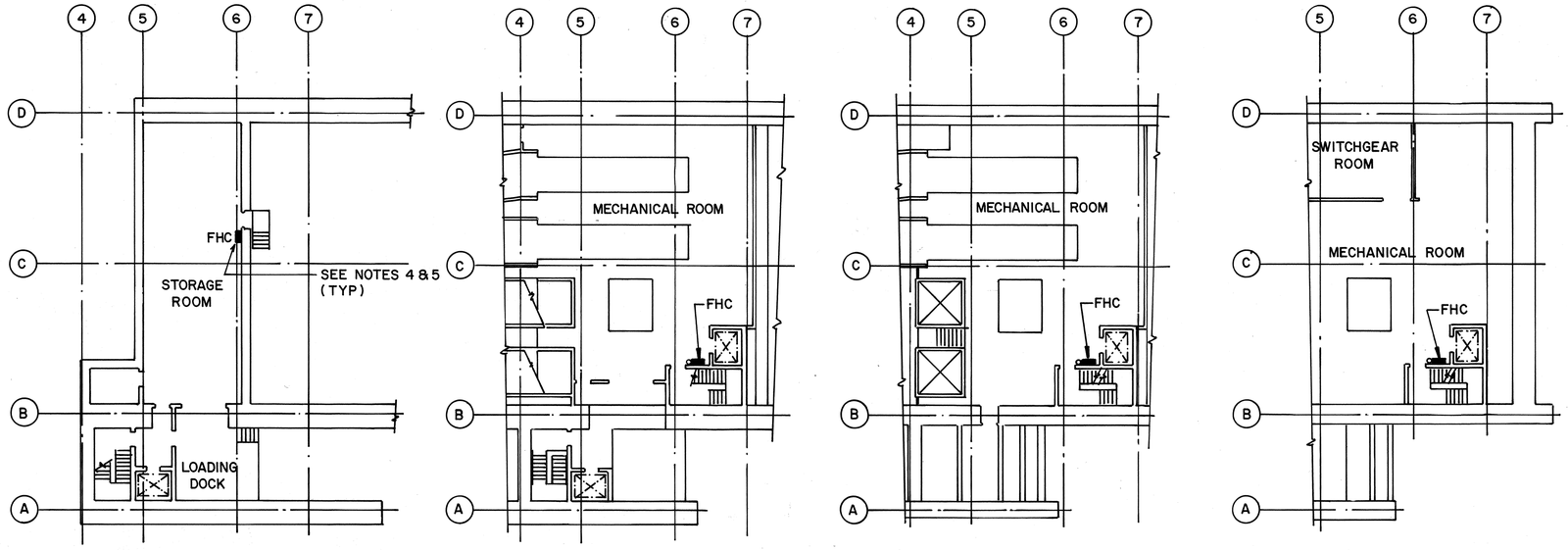

LEVEL A PARTIAL PLAN

LEVEL 2 PARTIAL PLAN

LEVEL 3 PARTIAL PLAN

LEVEL 4 PARTIAL PLAN

HAIKU INBOUND PORTAL BUILDING

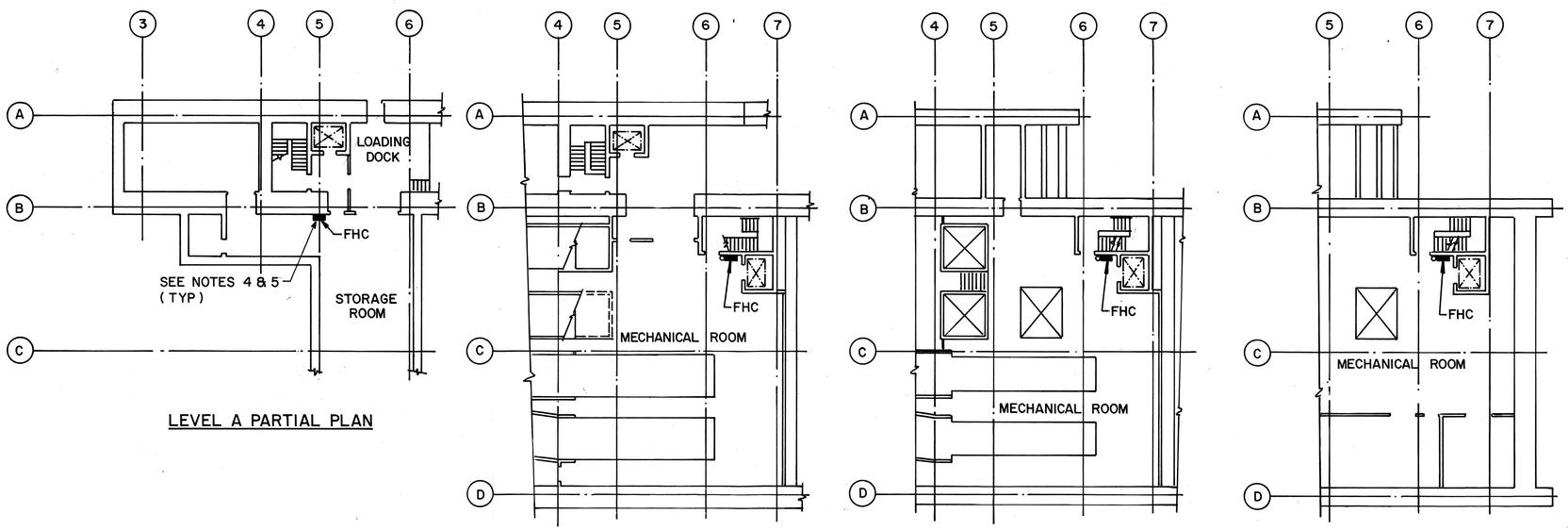

LEVEL A PARTIAL PLAN

LEVEL 2 PARTIAL PLAN

LEVEL 3 PARTIAL PLAN

LEVEL 4 PARTIAL PLAN

HAIKU OUTBOUND PORTAL BUILDING

NOTES

1. FHC FIRE HOSE CABINET
2. 2½" VALVES SHALL BE SET AT 150 PSIG DOWNSTREAM PRESSURE.
3. 1½" VALVES SHALL BE SET AT 100 PSIG DOWNSTREAM PRESSURE.
4. THIS PLAN IDENTIFIES LOCATION OF FIRE HOSE CABINETS WITH VALVES REQUIRING CALIBRATION.
5. FIRE HOSE CABINETS IN PORTAL BUILDINGS CONTAIL ONE 2½" VALVE AND ONE 1½" VALVE.

ORIGINAL PLAN		DATE
	SURVEY PLOTTED BY	
	DRAWN BY	
	TRACED BY D. E. DRYDEN	OCT 94
NOTE BOOK	DESIGNED BY D. E. DRYDEN	OCT 94
No.	QUANTITIES BY	
	CHECKED BY K. J. HARRIS	JAN 95

DATE	REVISION

STATE OF HAWAII
DEPARTMENT OF TRANSPORTATION
HIGHWAYS DIVISION

PRESSURE REDUCING HOSE VALVE
TESTING AND CALIBRATION - 3
COMMON WORK

H-3 FINISH (UNIT III)
FAIP NO. I-H3-1(75), UNIT III
T.K. TUNNEL/ACCESS ROADS

SCALE: NONE DATE: JUN 1995

SHEET NO. 7M16 OF 16 SHEETS

KENNETH J. HARRIS
LICENSED PROFESSIONAL ENGINEER
No. 7707-M
HAWAII, U.S.A.

THIS WORK WAS PREPARED BY ME OR UNDER MY SUPERVISION

FED. ROAD DIST. NO.	STATE	FED. AID PROJ. NO.	FISCAL YEAR	SHEET NO.	TOTAL SHEETS
HAWAII	HAW.	I-H3-1(75) UNIT III	1994	296	353

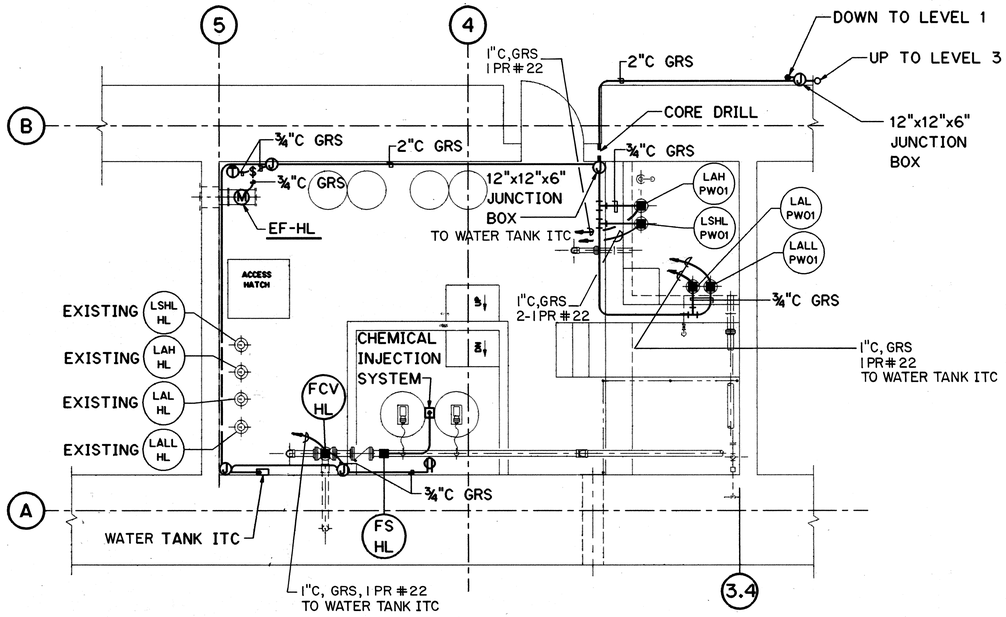

WATER TREATMENT AND TANK ACCESS ROOM PLAN
HALAWA OB PORTAL BLDG-LEVEL 2

SCALE: 1/4" = 1'-0"

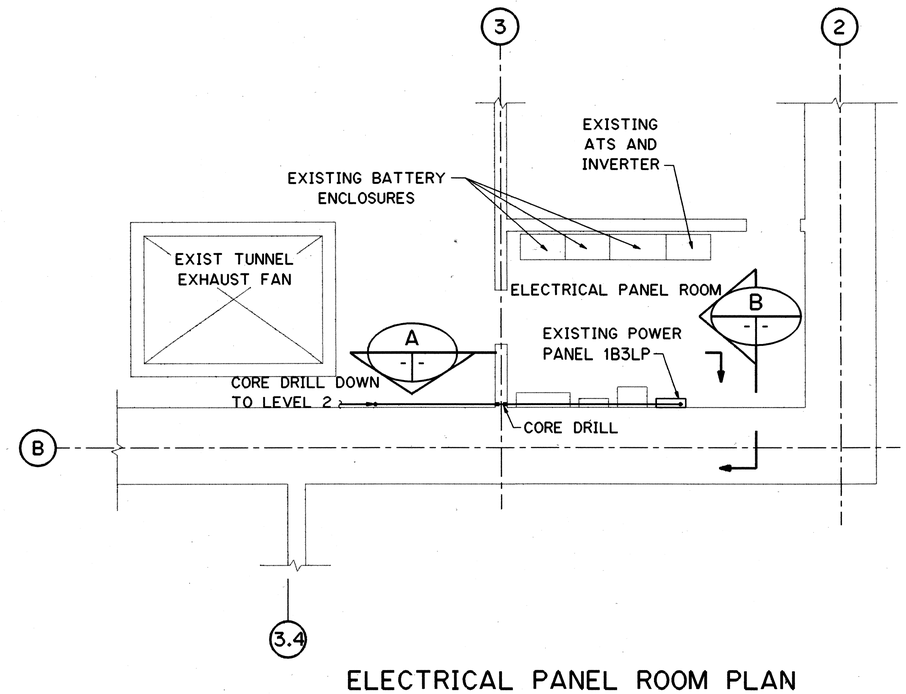

ELECTRICAL PANEL ROOM PLAN
HALAWA OB PORTAL BLDG-LEVEL 3

SCALE: 1/4" = 1'-0"

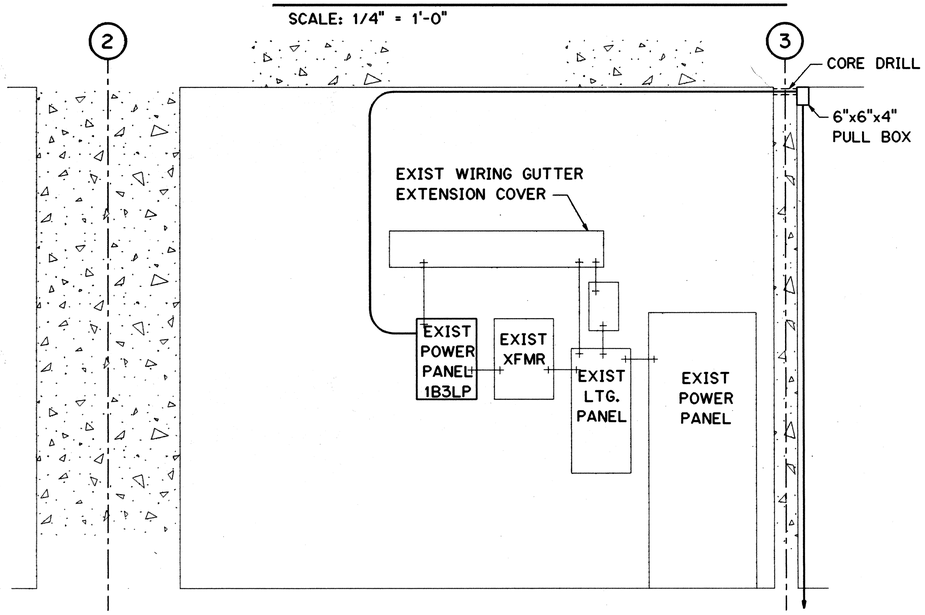

SECTION A
SCALE: 1/2" = 1'-0"

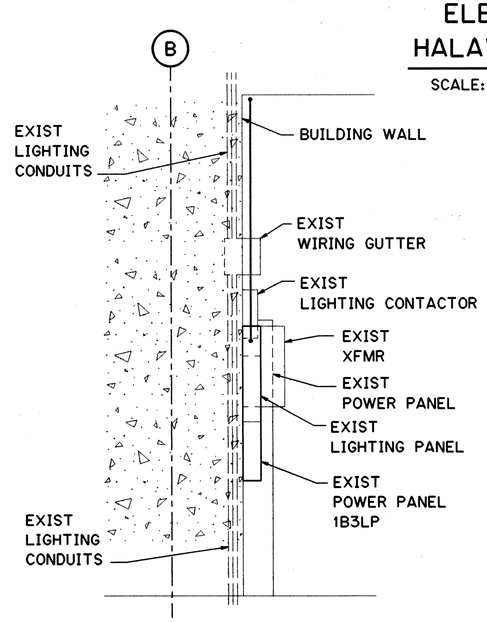

SECTION B
SCALE: 1/2" = 1'-0"

GRAPHIC SCALE
2' 1' 0' 2' 4'
½" = 1'-0"
4' 2' 0' 4' 8'
¼" = 1'-0"

NOTE:

1. ALL CONDUITS ARE 1" GRS UNLESS NOTED OTHERWISE.

FOR DETAIL AS-BUILT INFORMATION
REFER TO CONSTRUCTION SUBMITTALS

DATE	REVISION
10/27/95	ADDENDUM 2- DELETED POTABLE WATER STOR. TK ITC, ADDED MONITORING CONDUIT

STATE OF HAWAII
DEPARTMENT OF TRANSPORTATION
HIGHWAYS DIVISION

HALAWA POTABLE WATER TREATMENT POWER PLAN

COMMON WORK
H-3 FINISH (UNIT III)
FAIP NO. I-H3-1(75), UNIT III
T.K. TUNNEL/ACCESS ROADS

SCALE: 1/2" = 1'-0" DATE: JUN 1995

KEENE M. MATSUDA
LICENSED PROFESSIONAL ENGINEER
NO. 8493-E
HAWAII, U.S.A.

THIS WORK WAS PREPARED BY ME OR UNDER MY SUPERVISION

Keene Matsuda

		DATE
SURVEY PLOTTED BY		
DRAWN BY	T. BURNS	APR 95
TRACED BY		
DESIGNED BY	I. HORTON	APR 95
QUANTITIES BY		
CHECKED BY	K. MATSUDA	APR 95

ORIGINAL PLAN
NOTE BOOK
NO.

SHEET NO. 7E1 OF 6 SHEETS

ADD. 296

HERNANDEZ ELWOOD:::2410:1DWG.MECH\M1043.FG871 1530N95-08.15.10

FED. ROAD DIST. NO.	STATE	FED. AID PROJ. NO.	FISCAL YEAR	SHEET NO.	TOTAL SHEETS
HAWAII	HAW.	I-H3-1(75) UNIT III	1994	297	353

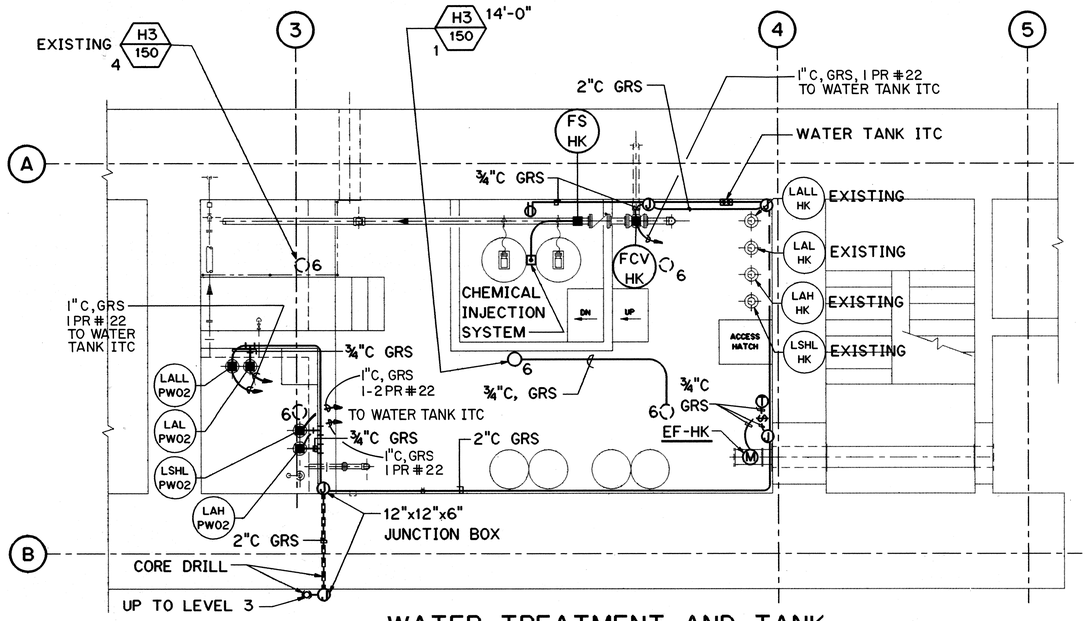

WATER TREATMENT AND TANK ACCESS ROOM PLAN
HAIKU OB PORTAL BLDG-LEVEL 2

SCALE: 1/4" = 1'-0"

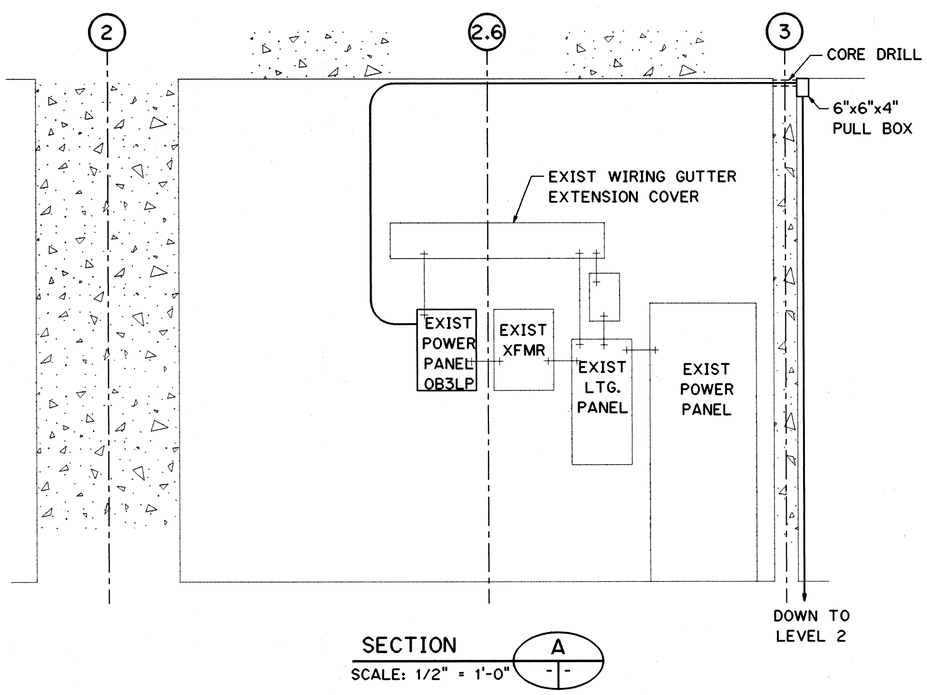

SECTION A
SCALE: 1/2" = 1'-0"

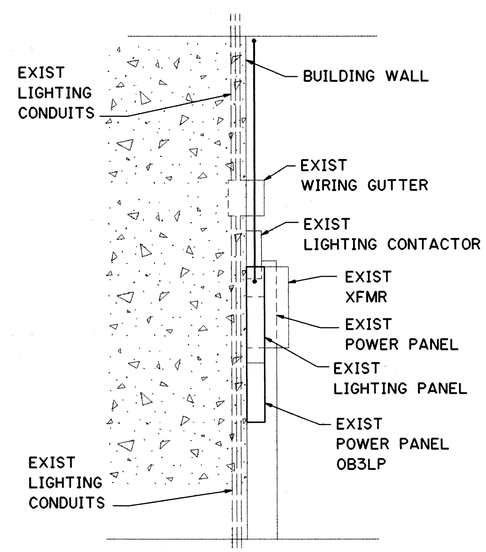

SECTION B
SCALE: 1/2" = 1'-0"

NOTE:

1. ALL CONDUITS ARE 1" GRS UNLESS NOTED OTHERWISE.
2. FOR LIGHTING FISTURE SCHEDULE SEE SHT NO. 3E10.

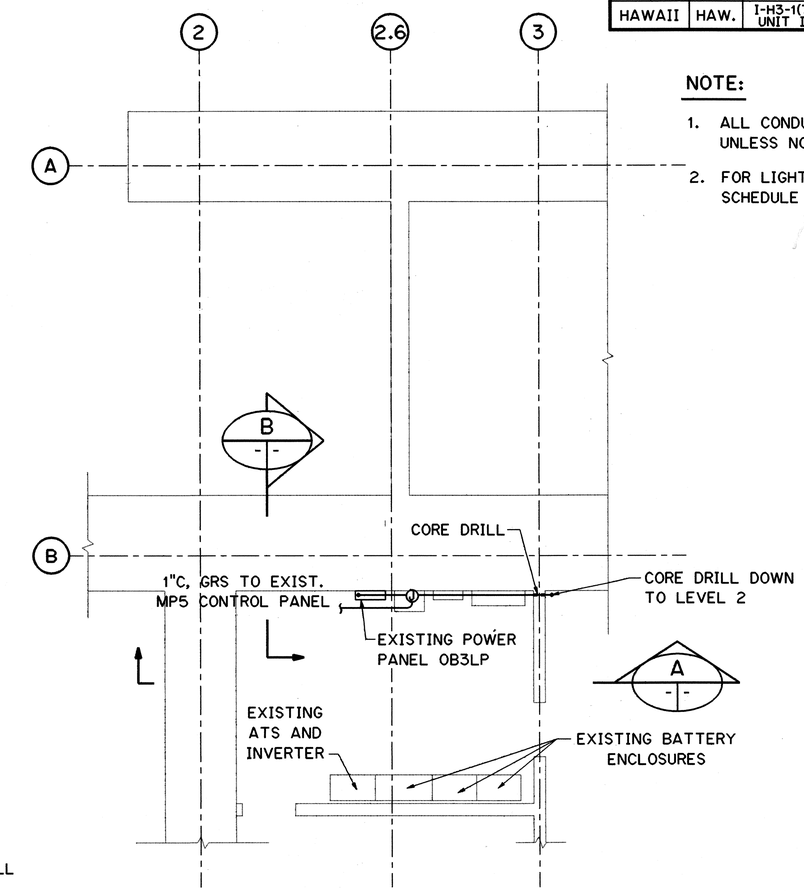

ELECTRICAL PANEL ROOM PLAN
HAKIU OB PORTAL BLDG-LEVEL 3

SCALE: 1/4" = 1'-0"

FOR DETAIL AS-BUILT INFORMATION REFER TO CONSTRUCTION SUBMITTALS

GRAPHIC SCALE
2' 1' 0' 2' 4'
½" = 1'-0"
4' 2' 0' 4' 8'
¼" = 1'-0"

KEENE M. MATSUDA
LICENSED PROFESSIONAL ENGINEER
NO. 8493-E
HAWAII, U.S.A.

THIS WORK WAS PREPARED BY ME OR UNDER MY SUPERVISION

Keene Matsuda

DATE	REVISION
10/27/95	ADDENDUM 2-ADDED MONITORING CONDUIT

STATE OF HAWAII
DEPARTMENT OF TRANSPORTATION
HIGHWAYS DIVISION

HAIKU WATER TREATMENT
POWER PLAN
COMMON WORK
H-3 FINISH (UNIT III)
FAIP NO. I-H3-1(75), UNIT III
T.K. TUNNEL/ACCESS ROADS

SCALE: AS SHOWN DATE: JUN 1995

SHEET NO. 7E2 OF 6 SHEETS

ORIGINAL PLAN		DATE
	SURVEY PLOTTED BY	
	DRAWN BY T. BURNS	MAR 95
	TRACED BY	
NOTE BOOK	DESIGNED BY D. DRYDEN	MAR 95
	QUANTITIES BY	
NO.	CHECKED BY K. HARRIS	MAR 95

HERNANDEZ ELWOOD:::2410:1DWG.MECHJMT042.FGB/1 15JUN95-08:32:50

ADD. 297

FED. ROAD DIST. NO.	STATE	FED. AID PROJ. NO.	FISCAL YEAR	SHEET NO.	TOTAL SHEETS
HAWAII	HAW.	I-H3-1(75) UNIT III	1994	298	353

SYSTEM: 208Y/120V 3Ø, 4W
MAINS: 125A LUGS ONLY
SHORT CIRCUIT RATING: 10 KAIC

PANEL - IB3LP (EXISTING)

PANEL LOCATION: ELECT. ROOM, LEVEL 3, HALAWA IB
SUPPLY LOCATION: PANEL IB3HLI VIA XFMR T4-5 ELECT. ROOM, LEVEL 3, HALAWA IB

SERVICE	CKT. NO.	LOAD kVA A	LOAD kVA B	LOAD kVA C	CIRCUIT BREAKER FRAME	CIRCUIT BREAKER POLES	CIRCUIT BREAKER TRIP	WIRE AWG	WIRE AWG	CIRCUIT BREAKER TRIP	CIRCUIT BREAKER POLES	CIRCUIT BREAKER FRAME	LOAD kVA A	LOAD kVA B	LOAD kVA C	CKT. NO.	SERVICE
LEVEL 3,STAIR 1,	1	1.90			100	1	20	#12	#12	20	1	100	0.90			2	LEVEL 4
& STAIR 3	3		0.90			1	20	#12	#12	20	1			0.90		4	
	5			1.08		1	20	#12	#12	20	1				0.90	6	
ROOF LEVEL	7	0.54				1	20	#12	#12	20	1		1.01			8	LEVEL 1 & 2
	9		0.54			1	20	#12	#12	20	1			0.90		10	
	11			0.31		1	20	#12	#12	20	1				1.08	12	
MCC HTR	13	1.5				1	20	#12	#12	20	1		2.0			14	600V SWGR
15 KV	15		2.7			2	30	#10		20	3			2.0		16	HEATER
SWGR HTR	17			2.7		2	30	#10							2.0	18	
ELEV. #1 LIGHTS	19	0.2				1	20	#12	#12	20	2		0.3			20	XFMR DISC
FCV-HL	21		0.12		100	1	20	#12						0.3		22	HEATER
EF-HL	23			0.7	100	1	20	#12	#12	20	1	100			0.12	24	LSHL-PW01, CHEM. RECEPT
SUBTOTAL		4.14	4.26	4.79									4.21	4.10	4.10		

	A	B	C
	8.35	8.36	8.89
	6.68	6.69	7.10

TOTAL CONNECTED = 25.60 kVA
ESTIMATED MAXIMUM DEMAND = 20.47 kVA

EXISTING

EXISTING

FAIP NO. I-H3-1(75), UNIT III

FAIP NO. I-H3-1(75), UNIT III

SYSTEM: 208Y/120V 3Ø, 4W
MAINS: 125A LUGS ONLY
SHORT CIRCUIT RATING: 10 KAIC

PANEL - OB3LP (EXISTING)

PANEL LOCATION: ELECT. ROOM, LEVEL 3, HAIKU OB
SUPPLY LOCATION: PANEL OB3HLI VIA XFMR T4-6 ELECT. ROOM, LEVEL 3, HAIKU OB

SERVICE	CKT. NO.	LOAD kVA A	LOAD kVA B	LOAD kVA C	CIRCUIT BREAKER FRAME	CIRCUIT BREAKER POLES	CIRCUIT BREAKER TRIP	WIRE AWG	WIRE AWG	CIRCUIT BREAKER TRIP	CIRCUIT BREAKER POLES	CIRCUIT BREAKER FRAME	LOAD kVA A	LOAD kVA B	LOAD kVA C	CKT. NO.	SERVICE
LEVEL 3	1	1.21			100	1	20	#12	#12	20	1	100	0.72			2	LEVEL 4
STAIR 1	3		0.90			1	20	#12	#12	20	1			1.10		4	STAIR 3
	5			0.90		1	20	#12	#12	20	1				0.90	6	
LEVEL A	7	1.30				1	20	#12	#12	20	1		0.72			8	LEVEL 2
ROOF LEVEL	9		1.44			1	20	#12	#12	20	1			0.72		10	STAIR 2
	11			1.33		1	20	#12	#12	20	1				0.72	12	
XFMR	13	0.3				2	20	#12	#12	20	3		3.0			14	600V SWGR
DISC. HEATER	15		0.3											3.0		16	HEATER
MCC HEATER	17			1.0		1	20	#12							3.0	18	
SPARE	19					1	20		#12	20	1	100	0.7			20	EF-HK
ELEV. #1 LIGHTS	21		0.2			1	20	#12	#12	20	1	100		0.12		22	LSHL-PW02, CHEM. RECEPT
ELEV. #2 LIGHTS	23			0.2		1	20	#12									
									#12	20	1	100			0.12	24	FCV-HK
SUBTOTAL		5.82	5.80	1.62									5.14	4.94	4.74		

	A	B	C
	7.95	7.78	8.17
	6.36	6.22	6.54

TOTAL CONNECTED = 23.90 kVA
ESTIMATED MAXIMUM DEMAND = 19.12 kVA

EXISTING

EXISTING

FAIP NO. I-H3-1(75), UNIT III

FAIP NO. I-H3-1(75), UNIT III

ORIGINAL PLAN	SURVEY PLOTTED BY	DATE
NOTE BOOK	DRAWN BY R. J. HERNANDEZ	MAY 95
NO.	TRACED BY	MAY 95
	DESIGNED BY I. NORTON	MAY 95
	QUANTITIES BY	
	CHECKED BY K. MATSUDA	MAY 95

DATE	REVISION

KEENE M. MATSUDA
LICENSED PROFESSIONAL ENGINEER
NO. 8493-E
HAWAII, U.S.A.

THIS WORK WAS PREPARED BY ME OR UNDER MY SUPERVISION

STATE OF HAWAII
DEPARTMENT OF TRANSPORTATION
HIGHWAYS DIVISION

PANEL SCHEDULES

COMMON WORK
H-3 FINISH (UNIT III)
FAIP NO. I-H3-1(75), UNIT III
T.K. TUNNEL/ACCESS ROADS

SCALE: NONE DATE: JUN 1995

SHEET NO. 7E3 OF 6 SHEETS

HERNANDEZ ELWOOD:::2410:DWG.ELECTJE033.FGB71 12JUN95-16.04.10

FED. ROAD DIST. NO.	STATE	FED. AID PROJ. NO.	FISCAL YEAR	SHEET NO.	TOTAL SHEETS
HAWAII	HAW.	I-H3-1(75) UNIT III	1994	299	353

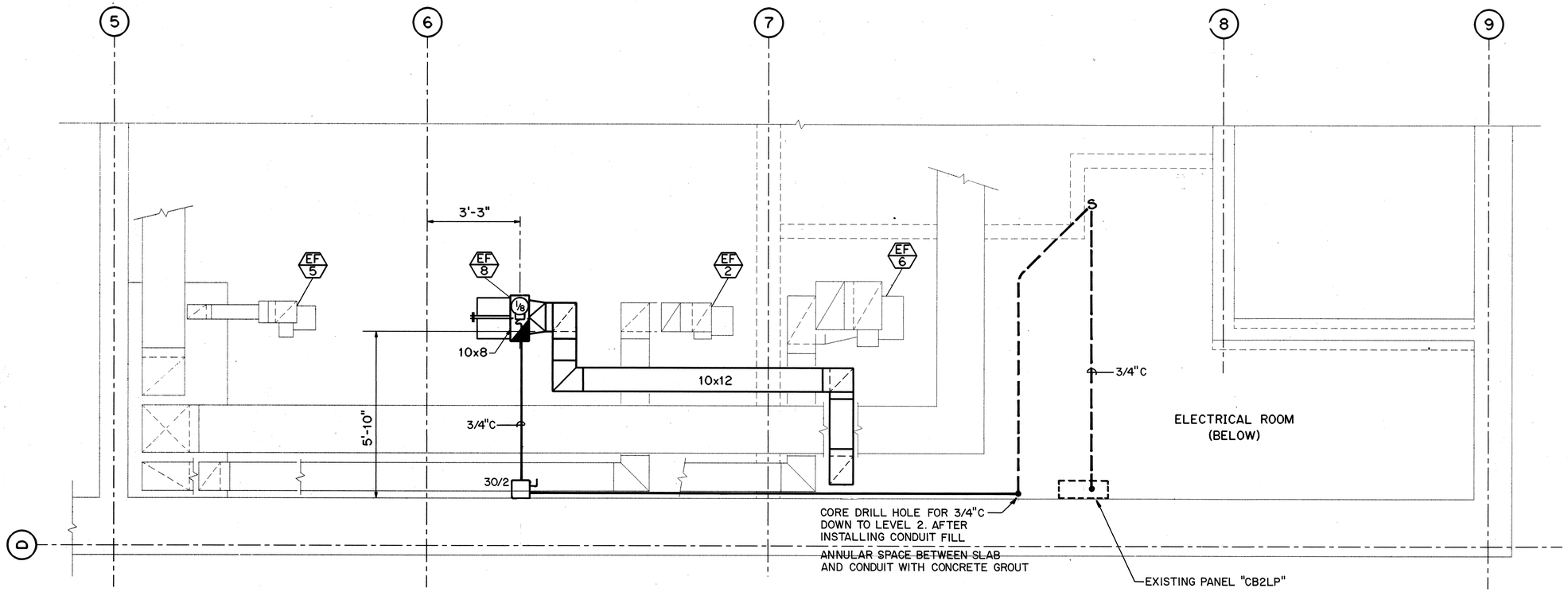

MECHANICAL ROOM PARTIAL PLAN
CONTROL BUILDING LEVEL 3

SYSTEM: 208Y/120V 3Ø 4W **PANEL -** "CB2LP" (EXISTING) **PANEL LOCATION:** ELECTRICAL ROOM
MAINS: 100 AT/225AF 3P CB **SUPPLY LOCATION:** PNL "CBMHP" VIA XFMR. ELECTRICAL ROOM
SHORT CIRCUIT RATING: 10 KAIC

SERVICE	CKT. NO.	LOAD kVA A	LOAD kVA B	LOAD kVA C	CIRCUIT BREAKER FRAME	CIRCUIT BREAKER POLES	CIRCUIT BREAKER TRIP	WIRE AWG	A	B	C	WIRE AWG	CIRCUIT BREAKER TRIP	CIRCUIT BREAKER POLES	CIRCUIT BREAKER FRAME	LOAD kVA A	LOAD kVA B	LOAD kVA C	CKT. NO.	SERVICE
LEVEL 1 RECEPT	1	0.54			100	1	20	#12				#12	20	1	100	0.7			2	REFRIGERATOR
	3		0.54														0.2		4	OVER COUNTER RECEPTACLE
	5			0.54														1.5	6	MICROWAVE
SUB-PNL. CB2LP-A	7	4.00										#8	40						8	SPARE
	9		1.00			3	40	#8					40						10	SPARE
	11			1.00								#12	20					0.5	12	MDF RECEPT.
LEVEL 1 RECEPT	13	0.72				1	20	#12				#10				0.9			14	EF-28, 29 & 30
	15		1.0									#12					0.3		16	EF-3
	17			0.72														0.3	18	EF-2
LEVEL 2 RECEPT	19	1.08														0.3			20	EF-5
	21		1.08														0.3		22	EF-6
	23			1.08														0.3	24	EF-4
LEVEL 3 RECEPT	25	0.90														0.3			26	E-7
DAMPER MOTORS	27		0.30														0.3		28	DAMPER MTR.
	29			0.30														0.6	30	CU-5 AUX. PWR.
	31	0.30														0.3			32	DAMPER MTR.
	33		0.30									#12					0.54		34	LEVEL 2
	35			0.30								#12						0.54	36	RECEPT.
	37	0.30										#12				0.54			38	
	39		0.30									#12					0.3		40	EF-8
	41			0.30								#12						0.2	42	ELEV. LIGHTS
SUBTOTAL		7.84	4.52	4.24					A	B	C					3.04	1.94	3.94		
TOTAL CONNECTED = 25.54 kVA									10.9	6.46	8.18									
ESTIMATED MAXIMUM DEMAND = 21.8 kVA									9.3	5.5	7.00									

EXISTING — EXISTING

FAIP NO. I-H3-1(75), UNIT III

EXISTING

FAIP NO. I-H3-1(75), UNIT III

LEGEND

- ——— CONDUIT RUN LOCATED IN MECHANICAL ROOM, LEVEL 3
- — — — CONDUIT RUN LOCATED IN ELECTRICAL ROOM, LEVEL 2

FOR DETAIL AS-BUILT INFORMATION
REFER TO CONSTRUCTION SUBMITTALS

DATE	REVISION

STATE OF HAWAII
DEPARTMENT OF TRANSPORTATION
HIGHWAYS DIVISION

CONTROL BLDG. ELECT. ROOM VENTILATION POWER PLAN

COMMON WORK
H-3 FINISH (UNIT III)
FAIP NO. I-H3-1(75), UNIT III
T.K. TUNNEL/ACCESS ROADS

SCALE: 1/2" = 1'-0" DATE: JUN 1995

KEENE M. MATSUDA
LICENSED PROFESSIONAL ENGINEER
No. 8493-E
HAWAII, U.S.A.

THIS WORK WAS PREPARED BY ME OR UNDER MY SUPERVISION

Keene Matsuda

ORIGINAL PLAN		DATE
SURVEY PLOTTED BY		
DRAWN BY	D. DRYDEN	MAY 95
TRACED BY		
DESIGNED BY	I. HORTON	MAY 95
QUANTITIES BY		
CHECKED BY	K. MATSUDA	MAY 95
NOTE BOOK		
NO.		

SHEET NO. 7E4 OF 6 SHEETS

FED. ROAD DIST. NO.	STATE	FED. AID PROJ. NO.	FISCAL YEAR	SHEET NO.	TOTAL SHEETS
HAWAII	HAW.	I-H3-1(75) UNIT III	1994	300	353

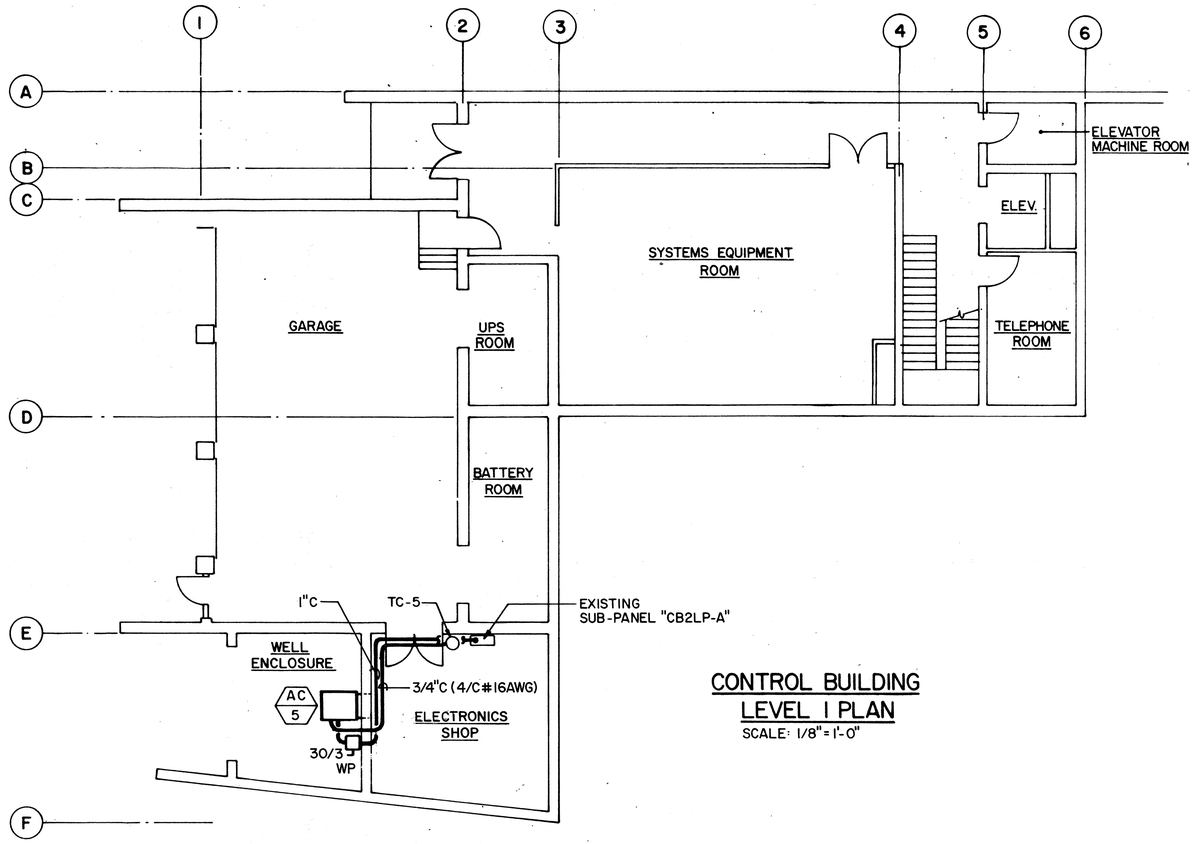

CONTROL BUILDING LEVEL 1 PLAN

SCALE: 1/8" = 1'-0"

SYSTEM: 208Y/120V 3ø 4W
MAINS: 40AT/100AF 3P CB
SHORT CIRCUIT RATING: 10 KAIC

PANEL - EXIST SUB-PANEL "CB2LP-A"

PANEL LOCATION: ELECTRONICS SHOP
SUPPLY LOCATION: PNL "CB2LP" ELECTRICAL ROOM, LEVEL 2

	SERVICE	CKT. NO.	LOAD kVA A	LOAD kVA B	LOAD kVA C	CIRCUIT BREAKER FRAME	CIRCUIT BREAKER POLES	CIRCUIT BREAKER TRIP	WIRE AWG	A	B	C	WIRE AWG	CIRCUIT BREAKER TRIP	CIRCUIT BREAKER POLES	CIRCUIT BREAKER FRAME	LOAD kVA A	LOAD kVA B	LOAD kVA C	CKT. NO.	SERVICE	
EXISTING	WIREMOLD	1	1.0			100	1	20						30	1	100	3.0			2	WH-6	EXISTING
EXISTING	RECEPTACLES	3		1.0										20						4	SPARE	EXISTING
EXISTING		5			1.0															6		EXISTING
FAIP NO. I-H3-1(75), UNIT III	AC-5	7	1.7				3	20	#12											8		
FAIP NO. I-H3-1(75), UNIT III		9		1.7																10		
FAIP NO. I-H3-1(75), UNIT III		11			1.7															12		
	SUBTOTAL		2.7	2.7	2.7												3.0					

TOTAL CONNECTED = 11.1 kVA

ESTIMATED MAXIMUM DEMAND = 11.1 kVA

A	B	C
5.7	2.7	2.7
5.7	2.7	2.7

FAIP NO. I-H3-1(75), UNIT III

FOR DETAIL AS-BUILT INFORMATION REFER TO CONSTRUCTION SUBMITTALS

DATE	REVISION

GRAPHIC SCALE
1 0 5 10 15
1/8" = 1'-0"

KEENE M. MATSUDA LICENSED PROFESSIONAL ENGINEER No. 8493-E HAWAII, U.S.A.

THIS WORK WAS PREPARED BY ME OR UNDER MY SUPERVISION

STATE OF HAWAII
DEPARTMENT OF TRANSPORTATION
HIGHWAYS DIVISION

CONTROL BLDG. ELECTRONICS SHOP POWER PLAN

COMMON WORK

H-3 FINISH (UNIT III)
FAIP NO. I-H3-1(75), UNIT III
T.K. TUNNEL/ACCESS ROADS

SCALE: 1/8" = 1'-0" DATE: JUN 1995

SHEET NO. 7E5 OF 6 SHEETS

		DATE
SURVEY PLOTTED BY	D. DRYDEN	5/95
DRAWN BY		
TRACED BY		
DESIGNED BY	T. HORTON	5/95
QUANTITIES BY		
CHECKED BY	K. MATSUDA	5/95

ORIGINAL PLAN
NOTE BOOK No.

FED. ROAD DIST. NO.	STATE	FED. AID PROJ. NO.	FISCAL YEAR	SHEET NO.	TOTAL SHEETS
HAWAII	HAW.	I-H3-1(75) UNIT III	1994	301	353

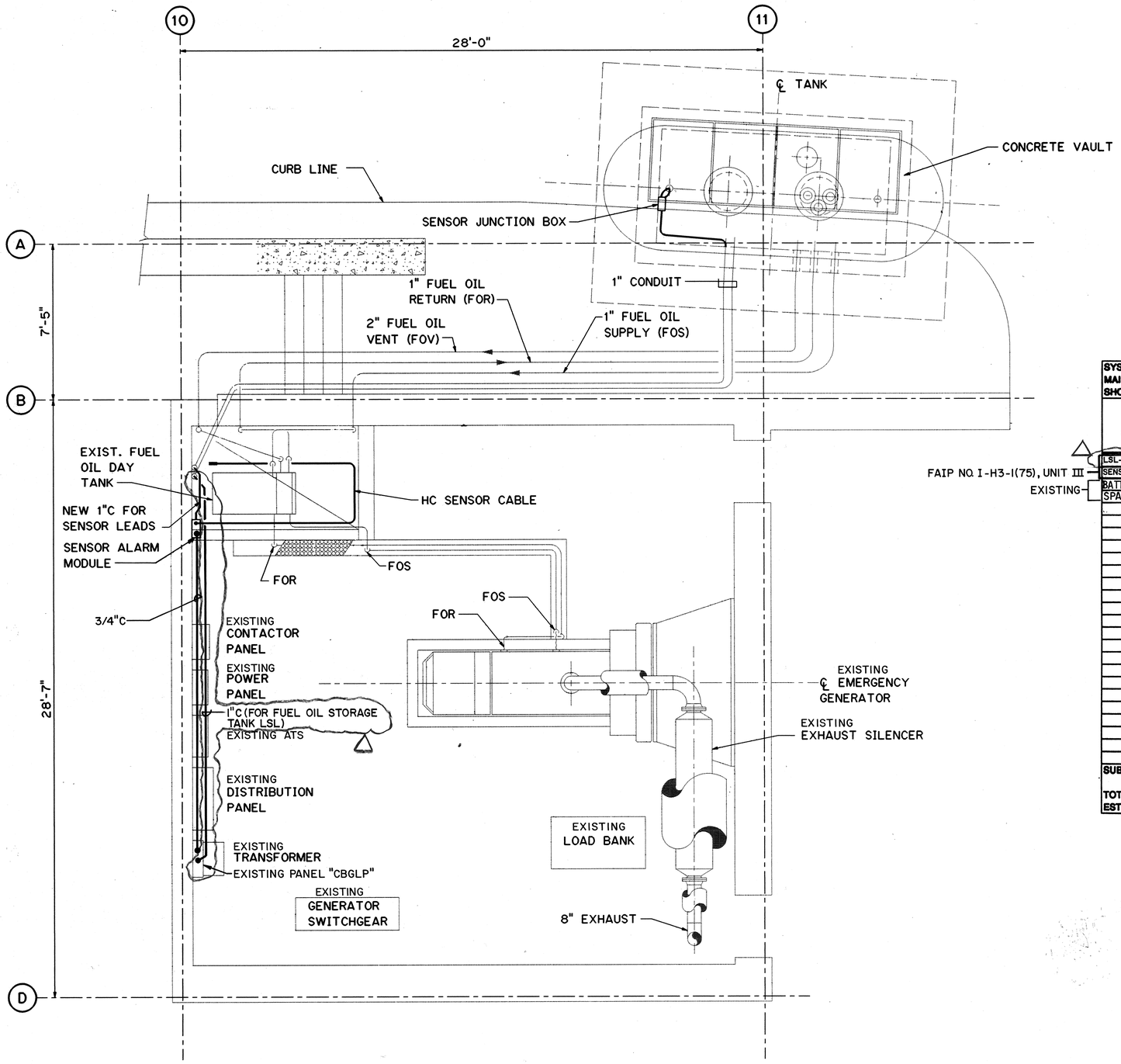

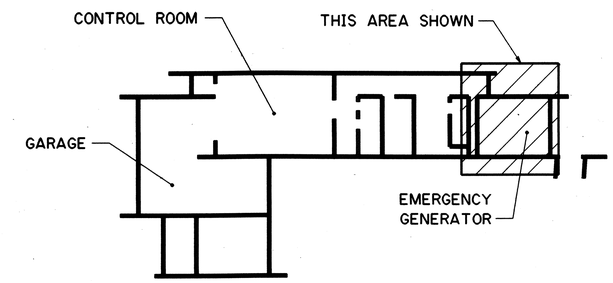

KEY PLAN

SYSTEM: 120/240V 1Ø 3W
MAINS: 40AT/100AF 2P CB
SHORT CIRCUIT RATING: 10 KAIC
PANEL - MPC-CBGLP (EXISTING)
PANEL LOCATION: GEN. ROOM
SUPPLY LOCATION: PNL "CBGHP"/XFMR. (IN MPC) GEN. ROOM

SERVICE	CKT. NO.	LOAD kVA A	LOAD kVA B	LOAD kVA C	CIRCUIT BREAKER FRAME	CIRCUIT BREAKER POLES	CIRCUIT BREAKER TRIP	WIRE AWG	A	B	C	WIRE AWG	CIRCUIT BREAKER TRIP	CIRCUIT BREAKER POLES	CIRCUIT BREAKER FRAME	LOAD kVA A	LOAD kVA B	LOAD kVA C	CKT. NO.	SERVICE
LSL-FUEL OIL TANK	1			0.12	100	1	20	#12					20	1	100	0.4			2	MP-3
SENSOR ALARM MOD	3		1.44					#12									0.9		4	RECEPTACLE
BATTERY CHARGER	5	0.72																	6	SPARE
SPARE	7																		8	
SUBTOTAL		0.72	1.44	0.12												0.4	0.9			

TOTAL CONNECTED = 3.58 kVA
ESTIMATED MAXIMUM DEMAND = 3.58 kVA

A	B	C
1.12	2.34	0.12
1.12	2.34	0.12

FAIP NO. I-H3-1(75), UNIT III

FAIP NO. I-H3-1(75), UNIT III

EXISTING

FOR DETAIL AS-BUILT INFORMATION REFER TO CONSTRUCTION SUBMITTALS

DATE	REVISION
5/1/97	DCN 75-017: INDICATED CONDUIT AND WIRING FOR FUEL OIL STORAGE TANK LSL

GRAPHIC SCALE
2' 0' 2' 4' 6'
3/8" = 1'-0"

KEENE M. MATSUDA
LICENSED PROFESSIONAL ENGINEER
No. 8409-E
HAWAII, U.S.A.

THIS WORK WAS PREPARED BY ME OR UNDER MY SUPERVISION

STATE OF HAWAII
DEPARTMENT OF TRANSPORTATION
HIGHWAYS DIVISION

FUEL OIL SYSTEM LEAK DETECTORS POWER PLAN

COMMON WORK
H-3 FINISH (UNIT III)
FAIP NO. I-H3-1(75), UNIT III
T.K. TUNNEL/ACCESS ROADS

SCALE: 3/8" = 1'-0" DATE: JUN 1995

SHEET NO. 7E6 OF 6 SHEETS

SURVEY PLOTTED BY		DATE
DRAWN BY	D. DRYDEN	MAY 95
TRACED BY	"	" MAY 95
DESIGNED BY	Y. HORTON	" MAY 95
QUANTITIES BY	"	" MAY 95
CHECKED BY	K. MATSUDA	" MAY 95
ORIGINAL PLAN	NOTE BOOK	NO.

BURNS SACVMS:::2410:1DWG.MECHJM1045.FGB71 04MAY95-08.35.00

FED. ROAD DIST. NO.	STATE	FED. AID PROJ. NO.	FISCAL YEAR	SHEET NO.	TOTAL SHEETS
HAWAII	HAW.	I-H3-1(75) UNIT III	1994	301 S-1	353

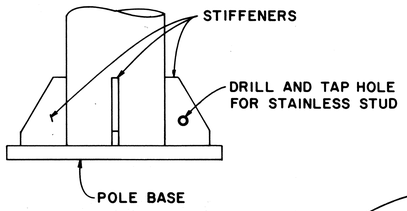

ELEVATION

SCALE : N.T.S.

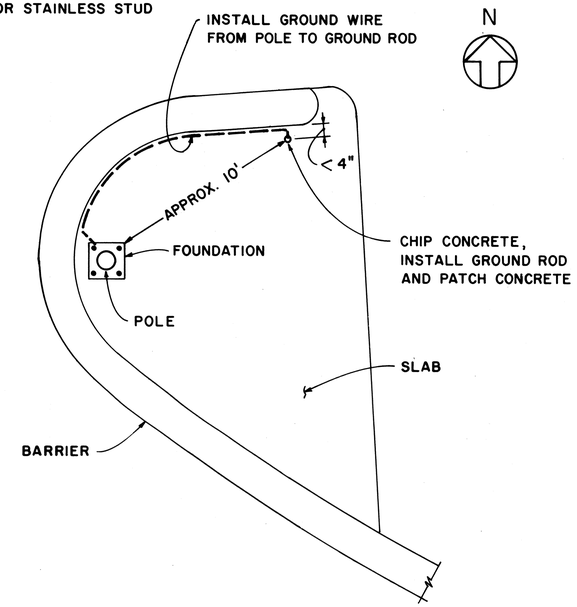

PLAN

SCALE : N.T.S.

ORIGINAL PLANS		
SURVEY PLOTTED BY	K. CHU	OCT 95
DRAWN BY		
TRACED BY	C. FELL	SEP 95
DESIGNED BY		
QUANTITIES BY	K. MATSUDA	OCT 95
CHECKED BY		
NOTE BOOK No.		

KEENE M. MATSUDA
LICENSED PROFESSIONAL ENGINEER
NO. 8493-E
HAWAII, U.S.A.

THIS WORK WAS PREPARED BY ME OR UNDER MY SUPERVISION

Keene Matsuda

DATE	REVISION
10/13/95	ADDENDUM 1

STATE OF HAWAII
DEPARTMENT OF TRANSPORTATION
HIGHWAYS DIVISION

FLAG POLE GROUNDING

COMMON WORK

H-3 FINISH (UNIT III)
FAIP NO. I-H3-1(75), UNIT III
T.K. TUNNEL/ACCESS ROADS

SCALE : NONE DATE: JUN 1995

SHEET NO. 7E6A OF 6 SHEETS

ADD. 301 S-1

FED. ROAD DIST. NO.	STATE	FED. AID PROJ. NO.	FISCAL YEAR	SHEET NO.	TOTAL SHEETS
HAWAII	HAW.	I-H3-1(75) UNIT III	1994	301 S-2	353

SYSTEM: 208Y/120V 3Ø, 4W PANEL - OBGLP
MAINS: 125AT/250AP
SHORT CIRCUIT RATING: 10 KAIC
PANEL LOCATION: SHOP AREA, LEVEL A, HAIKU OB
SUPPLY LOCATION: PANEL OBGHP, SHOP AREA, LEVEL A, HAIKU OB

SERVICE	CKT. NO.	LOAD kVA A	LOAD kVA B	LOAD kVA C	CIRCUIT BREAKER FRAME	CIRCUIT BREAKER POLES	CIRCUIT BREAKER TRIP	WIRE AWG	A	B	C	WIRE AWG	CIRCUIT BREAKER TRIP	CIRCUIT BREAKER POLES	CIRCUIT BREAKER FRAME	LOAD kVA C	LOAD kVA B	LOAD kVA A	CKT. NO.	SERVICE
RECEPTACLE	1	1.50			100	1	20	#12				#12	20	2	100			0.92	2	PEDESTAL
RECEPTACLE	3		0.72		100	1	20	#12									0.92		4	GRINDER
SINK AERATOR	5			1.00	100	1	20	#12				#12	20	2	100	1.15			6	BELT/DISK
MW OVEN	7	1.20			100	1	20	#12										1.15	8	GRIDER
RECEPTACLE	9		1.50		100	1	20	#12				#12	20	2	100		1.15		10	DRILL PRESS
RECEPTACLE	11			1.00	100	1	20	#12								1.15			12	
RECEPTACLE	13	1.18			100	1	20	#12				#10	30	1	100			1.18	14	CUT-OFF SAW
RECEPTACLE	15		1.44		100	1	20	#12				#12	20	1	100		1.13		16	PIPE THREADER
RECEPTACLE	17			1.44	100	1	20	#12				#12	20	2	100	0.06			18	ELECTRODE
RECEPTACLE	19	1.18			100	1	20	#12										0.60	20	OVEN
RECEPTACLE	21		1.08		100	1	20	#12				#10	20	1	100		1.80		22	FUME HOOD
RECEPTACLE	23			1.00	100	1	20	#12				#8	40	1	100	3.0			24	WATER HEATER WH-4
RECEPTACLE	25	0.90			100	1	20	#12					20	2	100				26	SPARE
COMPUTER	27		1.00		100	1	20	#12											28	
COMPUTER	29			1.00	100	1	20	#12					20	2	100				30	
COMPUTER	31	1.00			100	1	20	#12											32	
COMPUTER	33		1.00		100	1	20	#12					30	1	100				34	
EF-38	35			0.7	100	1	20	#12				#12	20	1	100	0.7			36	EF-18
EF-39	37	0.7			100	1	20	#12				#12	20	1	100		0.7		38	EF-42
EF-40	39		0.7		100	1	20	#12				#12	20	1	100			1.8	40	DH-1
EF-41	41			0.7	100	1	20	#12					20	1	100				42	SPARE
		7.66	7.44	6.14												6.6	5.7	6.27		

TOTAL CONNECTED 39.87 kVA
ESTIMATED MAXIMUM DEMAND 31.26 kVA

A	B	C
14.32	13.14	12.41
11.45	10.5	9.31

FAIP NO. I-H3-1(75), UNIT III

SYSTEM: 208Y/120V 3Ø,4W PANEL - IB3LP
MAINS: 125A LUGS ONLY
SHORT CIRCUIT RATING: 10 KAIC
PANEL LOCATION: ELECT. ROOM, LEVEL 3, HAIKU IB
SUPPLY LOCATION: PANEL IB3HL1 VIA XFMR T4-5 ELECT. ROOM, LEVEL 3, HAIKU IB

SERVICE	CKT. NO.	LOAD kVA A	LOAD kVA B	LOAD kVA C	CIRCUIT BREAKER FRAME	CIRCUIT BREAKER POLES	CIRCUIT BREAKER TRIP	WIRE AWG	A	B	C	WIRE AWG	CIRCUIT BREAKER FRAME	CIRCUIT BREAKER POLES	CIRCUIT BREAKER TRIP	LOAD kVA A	LOAD kVA B	LOAD kVA C	CKT. NO.	SERVICE
LEVEL 3 & STAIR 1	1	0.90			100	1	20	#12				#12	100	1	20	0.90			2	LEVEL 4 & STAIR 3
	3		1.08														1.08		4	
	5			1.08														0.90	6	
LEVEL A	7	0.68														0.72			8	LEVEL 2 & STAIR 2
	9		0.70														0.54		10	
	11			0.81														0.54	12	
ROOF	13	0.40										#12				2.0			14	600V SWGR
	15		0.40											3	20		2.0		16	HEATER
	17			0.40														2.0	18	
MCC HEATER	19	1.5										#12		2	20	0.3			20	XFMR DISC.
15kV SWGR	21		2.7			2	30	#10									0.3		22	HEATER
HEATER	23			2.7								#10		1	40			3.0	24	WATER HEATER
ELEV #1 LIGHTS	25	0.2				1	20	#12				#10		2	20	0.9			26	DH-3
ELEV #2 LIGHTS			0.2			1	20	#12									0.9		28	
		3.68	5.08	4.99												4.82	4.82	6.44		

TOTAL CONNECTED 29.83 kVA
ESTIMATED MAXIMUM DEMAND 23.33 kVA

A	B	C
8.5	9.9	11.43
6.63	7.7	9.00

FAIP NO. I-H3-1(75), UNIT III

FAIP NO. I-H3-1(75), UNIT III

SYSTEM: 208Y/120V 3Ø, 4W PANEL - OB3LP
MAINS: 125 A LUGS ONLY
SHORT CIRCUIT RATING: 10 KAIC
PANEL LOCATION: ELECT. ROOM, LEVEL 3, HAIKU OB
SUPPLY LOCATION: PANEL OB3HL1 VIA XFMR T4-6 ELECT. ROOM, LEVEL 3, HAIKU OB

SERVICE	CKT. NO.	LOAD kVA A	LOAD kVA B	LOAD kVA C	CIRCUIT BREAKER FRAME	CIRCUIT BREAKER POLES	CIRCUIT BREAKER TRIP	WIRE AWG	A	B	C	WIRE AWG	CIRCUIT BREAKER FRAME	CIRCUIT BREAKER POLES	CIRCUIT BREAKER TRIP	LOAD kVA A	LOAD kVA B	LOAD kVA C	CKT. NO.	SERVICE
LEVEL 3	1	1.21			100	1	20	#12				#12	100	1	20	0.72			2	LEVEL 4
STAIR 1	3		0.90														1.10		4	STAIR 3
	5			0.90														0.90	6	
LEVEL A	7	1.30														0.72			8	LEVEL 2
ROOF LEVEL	9		1.44														0.72		10	STAIR 2
	11			1.33														0.72	12	
XFMR	13	0.3				2	20	#12				#12		3	20	3.0			14	600V SWGR
DISC. HEATER	15		0.3														3.0		16	HEATER
MCC HEATER	17			1.0		1	20	#12										3.0	18	
SPARE	19					1	20					#10		2	20	0.9			20	DH-2
ELEV. #1 LIGHTS	21		0.2			1	20	#12									0.9		22	
ELEV. #2 LIGHTS	23			0.2		1	20	#12						1	20				24	SPARE
		2.81	2.84	3.43												5.34	5.72	4.62		

TOTAL CONNECTED 24.76 kVA
ESTIMATED MAXIMUM DEMAND 18.58 kVA

A	B	C
8.15	8.56	8.05
6.12	6.42	6.04

FAIP NO. I-H3-1(75), UNIT III

FAIP NO. I-H3-1(75), UNIT III

DATE	REVISION
10/13/95	ADDENDUM 1

STATE OF HAWAII
DEPARTMENT OF TRANSPORTATION
HIGHWAYS DIVISION

PANEL SCHEDULES

DEHUMIDIFIERS

COMMON WORK

H-3 FINISH (UNIT III)
FAIP NO. I-H3-1(75), UNIT III
T.K. TUNNEL/ACCESS ROADS

SCALE: NONE DATE: OCT 1995

KEENE M. MATSUDA
LICENSED PROFESSIONAL ENGINEER
NO. 8493-E
HAWAII, U.S.A.

THIS WORK WAS PREPARED BY ME OR UNDER MY SUPERVISION

SHEET NO. 7E6B OF 6 SHEETS

ADD. 301 S-2

ORIGINAL PLAN | NOTE BOOK No. | SURVEY PLOTTED BY | DRAWN BY | TRACED BY | DESIGNED BY | QUANTITIES BY | CHECKED BY | DATE

FED. ROAD DIST. NO.	STATE	FED. AID PROJ. NO.	FISCAL YEAR	SHEET NO.	TOTAL SHEETS
HAWAII	HAW.	I-H3-1(75) UNIT III	1994	301 S-3	353

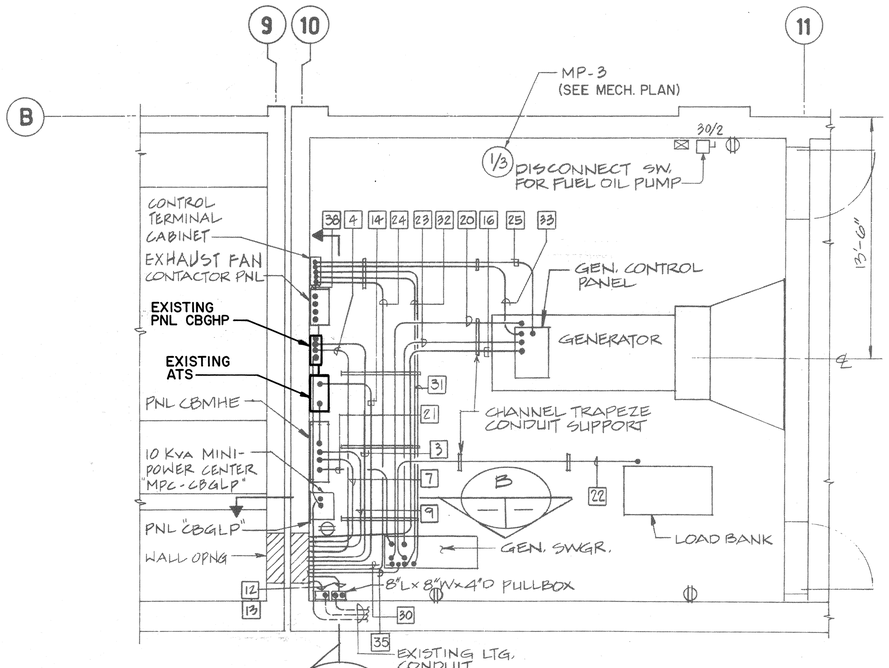

GENERATOR ROOM PLAN

SCALE: 1/4" = 1'-0"

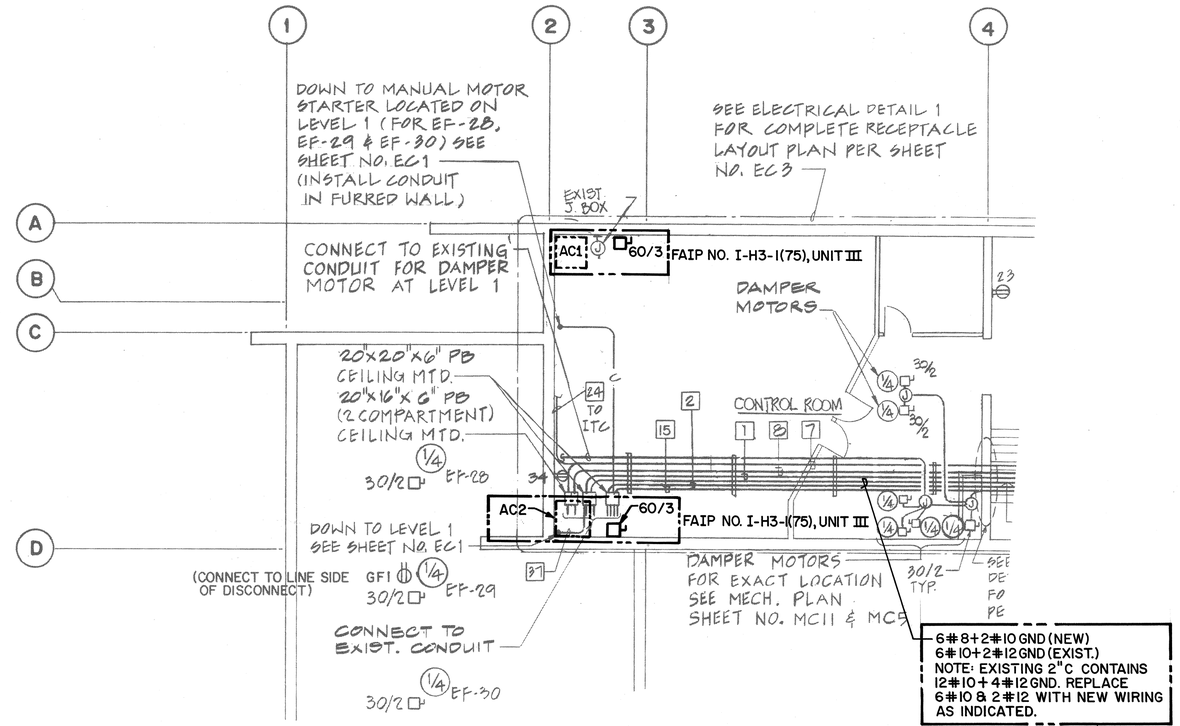

CONTROL ROOM PLAN

SCALE: 1/8" = 1'-0"

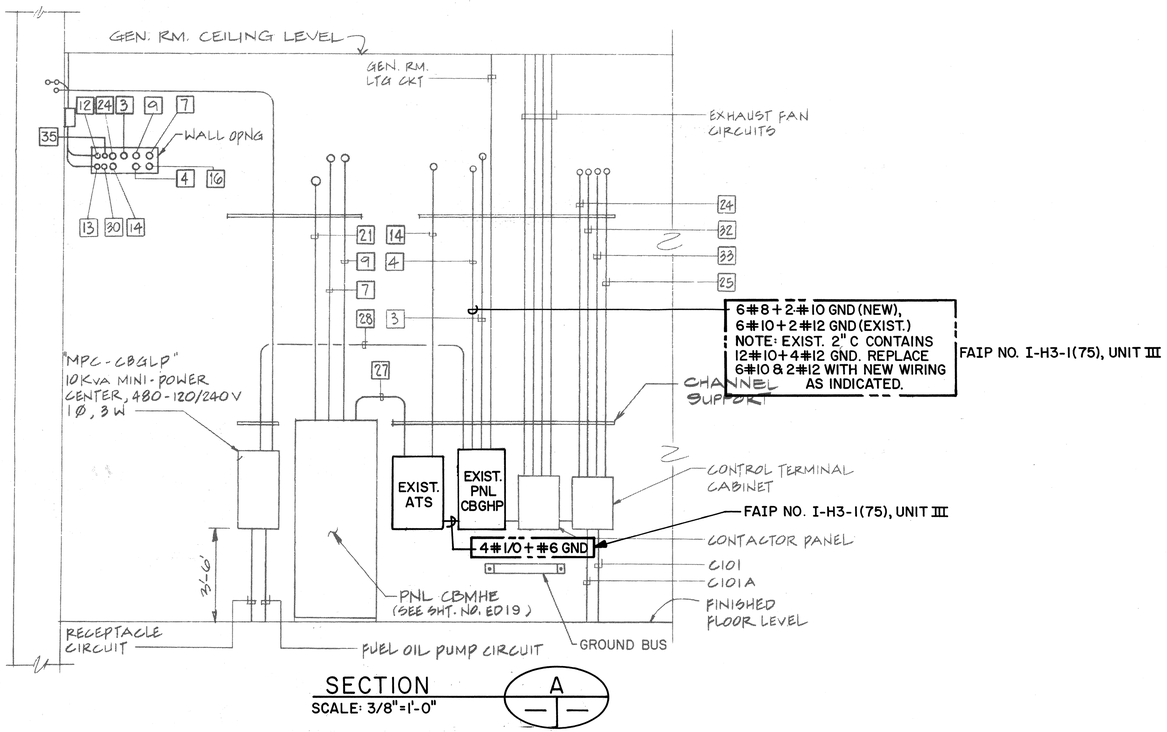

SECTION

SCALE: 3/8" = 1'-0"

DATE	REVISION
9/24/97	DCN75-021: SHEET ADDED

STATE OF HAWAII
DEPARTMENT OF TRANSPORTATION
HIGHWAYS DIVISION

CONTROL BUILDING PLANS AND SECTION

COMMON WORK

H-3 FINISH (UNIT III)
FAIP NO. I-H3-1(75), UNIT III
T.K. TUNNEL/ACCESS ROADS

SCALE: AS NOTED DATE: SEP 1997

KEENE M. MATSUDA
LICENSED PROFESSIONAL ENGINEER
NO. 8493-E
HAWAII, U.S.A.

THIS WORK WAS PREPARED BY ME OR UNDER MY SUPERVISION

Keene Matsuda

SHEET NO. 7E6C OF 6 SHEETS

ORIGINAL PLAN | NOTE BOOK No. | SURVEY PLOTTED BY | DRAWN BY | TRACED BY | DESIGNED BY | QUANTITIES BY | CHECKED BY | DATE

FED. ROAD DIST. NO.	STATE	FED. AID PROJ. NO.	FISCAL YEAR	SHEET NO.	TOTAL SHEETS
HAWAII	HAW.	I-H3-1(75) UNIT III	1994	301 S-4	353

SYSTEM: 480Y/277V 3Ø 4W PANEL – "CBMHP" PANEL LOCATION: ELECTRICAL ROOM
MAINS: 400AT/800AF 3P CB SUPPLY LOCATION: HALAWA IB & OB 480V SWITCHGEAR
SHORT CIRCUIT RATING: 14 KAIC

SERVICE	CKT. NO.	LOAD kVA A	LOAD kVA B	LOAD kVA C	CIRCUIT BREAKER FRAME	CIRCUIT BREAKER POLES	CIRCUIT BREAKER TRIP	WIRE AWG	A	B	C	WIRE AWG	CIRCUIT BREAKER TRIP	CIRCUIT BREAKER POLES	CIRCUIT BREAKER FRAME	LOAD kVA A	LOAD kVA B	LOAD kVA C	CKT. NO.	SERVICE
	1	9.3						#8				1/0				31.0			2	
PNL CB2LP/XFR	3		5.2		100	3	40						150	3	150		30.3		4	PNL CBGHP
	5			6.8														27.8	6	
	7	25.8						#2				#2				16.6			8	UPS SYSTEM
PNL CB2HP	9		25.8		100	3	100						80	3	100		16.6		10	EQUIPMENT
	11			25.8														16.6	12	
	13	6.05						#6					90	1	100	5.0			14	FTS/PNL CB2HE
PNL CB2HL	15		3.24		100	3	60						90	1	100				16	SPARE
	17			4.39									90	1	100				18	SPARE
	19	14						#6											20	
PUMP, MP-1	21		14		100	3	100						100	3	100				22	SPARE
	23			14															24	
UPS BYPASS	25																		26	
SWITCH	27				100	3	80												28	SPACE
(BREAKER	29																		30	
& FEEDER																				
BY OTHERS)																				
SUBTOTAL		55.2	48.2	50.9												52.6	46.9	44.4		
TOTAL CONNECTED =		298 kVA							A 107.8	B 95.1	C 95.3									
ESTIMATED MAXIMUM DEMAND		253.4 kVA							91.6	80.8	81.0									

FAIP NO. I-H3-1(75), UNIT III

FAIP NO. I-H3-1(75), UNIT III

FAIP NO. I-H3-1(75), UNIT III

SYSTEM: 480Y/277V 3Ø 4W PANEL – "CBGHP" PANEL LOCATION: GEN. ROOM
MAINS: 150AT/150AF 3P CB SUPPLY LOCATION: PNL "CBMHE"/"CBMHP" VIA ATS GEN. ROOM
SHORT CIRCUIT RATING: = 14 KAIC

SERVICE	CKT. NO.	LOAD kVA A	LOAD kVA B	LOAD kVA C	CIRCUIT BREAKER FRAME	CIRCUIT BREAKER POLES	CIRCUIT BREAKER TRIP	WIRE AWG	A	B	C	WIRE AWG	CIRCUIT BREAKER TRIP	CIRCUIT BREAKER POLES	CIRCUIT BREAKER FRAME	LOAD kVA A	LOAD kVA B	LOAD kVA C	CKT. NO.	SERVICE
	1	0.2						#12				#8				7.5			2	
CU-1	3		0.2		100	3	20						40	3	100		7.5		4	AC-1
	5			0.2														7.5	6	
	7	0.2														7.5			8	
CU-2	9		0.2		100	3	20						40	3	100		7.5		10	AC-2
	11			0.2														7.5	12	
	13	0.4										#10				4.4			14	
CU-3	15		0.4		100	3	20						30	3	100		4.4		16	AC-3
	17			0.4														4.4	18	
	19	0.4														4.4			20	
CU-4	21		0.4		100	3	20						30	3	100		4.4		22	AC-4
	23			0.4														4.4	24	
	25	1.4										#10				2.5			26	MPC-
EF-31 & 32	27		1.4		100	3	20						30	2	100		2.5		28	CBGLP
	29			1.4															30	SPACE
	31	1.4																	32	
EF-33 & 34	33		1.4		100	3	20						30	3	100				34	SPARE
	35			1.4															36	
GEN. ROOM LTG.	37	0.7			100	1	20												38	
SPARE	39				100	1	20						20	3	100				40	SPARE
	41				100	1	20												42	
SUBTOTAL		4.7	4.0	4.0												26.3	26.3	23.8		
TOTAL CONNECTED =		89.1 kVA							A 31.0	B 30.3	C 27.8									
ESTIMATED MAXIMUM DEMAND =		89.1 kVA							31.0	30.3	27.8									

FAIP NO. I-H3-1(75), UNIT III

FAIP NO. I-H3-1(75), UNIT III

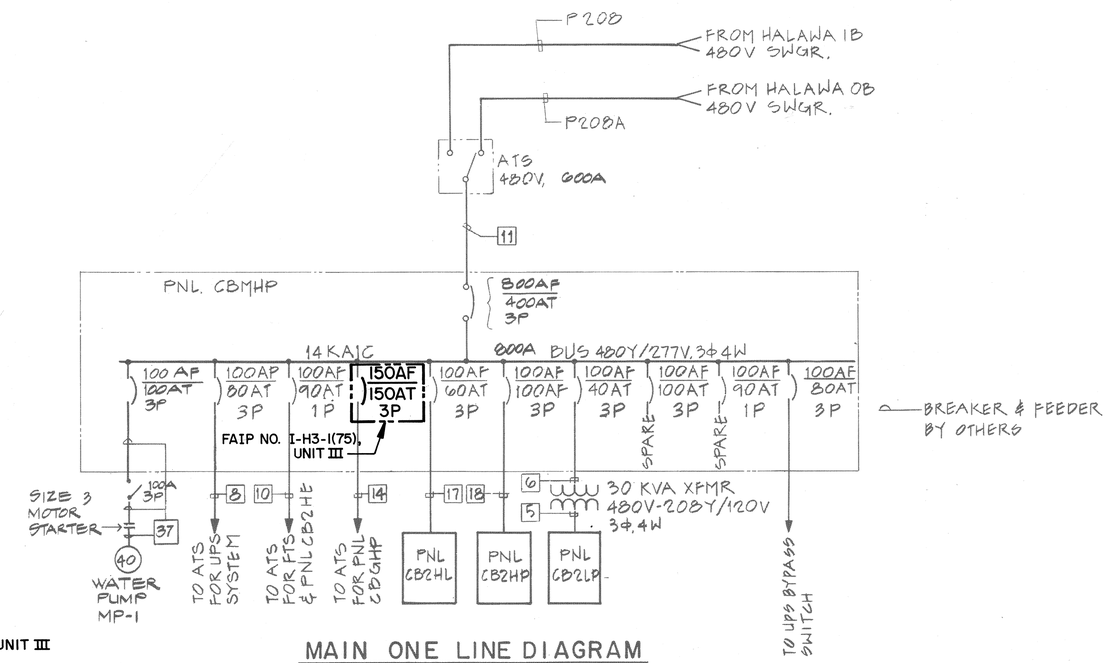

MAIN ONE LINE DIAGRAM

9/24/97	DCN 75-021: SHEET ADDED
DATE	REVISION

STATE OF HAWAII
DEPARTMENT OF TRANSPORTATION
HIGHWAYS DIVISION

PANEL SCHEDULES AND MAIN ONE LINE DIAGRAM

COMMON WORK
H-3 FINISH (UNIT III)
FAIP NO. I-H3-1(75), UNIT III
T.K. TUNNEL/ACCESS ROADS

SCALE: NONE DATE: SEP 1997

KEENE M. MATSUDA LICENSED PROFESSIONAL ENGINEER NO. 8493-E HAWAII, U.S.A.

THIS WORK WAS PREPARED BY ME OR UNDER MY SUPERVISION

SHEET NO. 7E6D OF 6 SHEETS

C.O. 301 S-4

ORIGINAL PLAN | NOTE BOOK No. | SURVEY PLOTTED BY | DRAWN BY | TRACED BY | DESIGNED BY | QUANTITIES BY | CHECKED BY | DATE

FED. ROAD DIST. NO.	STATE	FED. AID PROJ. NO.	FISCAL YEAR	SHEET NO.	TOTAL SHEETS
HAWAII	HAW.	I-H3-1(75) UNIT III	1994	304	353

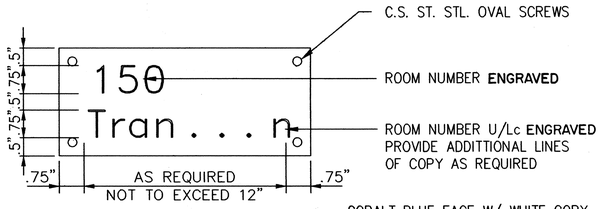

COBALT BLUE FACE W/ WHITE COPY

1 SIGN TYPE A – OPTIMA REGULAR
NO SCALE

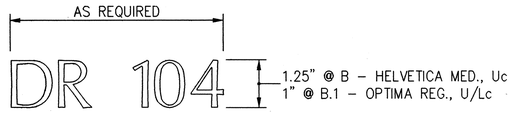

4 SIGN TYPE B & B.1
NO SCALE

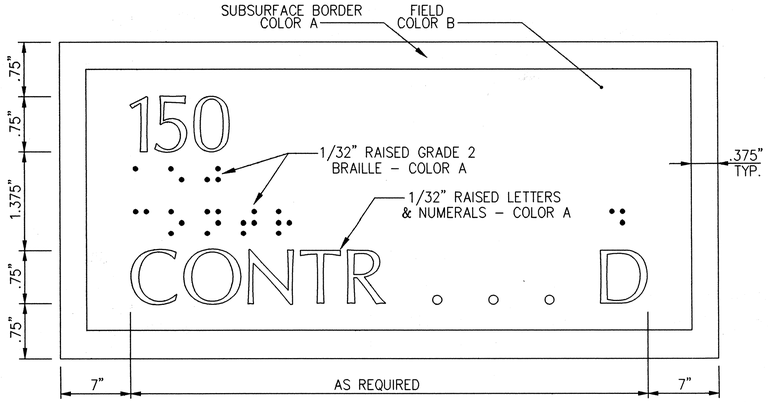

COLOR A: COBALT BLUE
COLOR B: WHITE

5 SIGN TYPE C – OPTIMA REG. Uc
NO SCALE

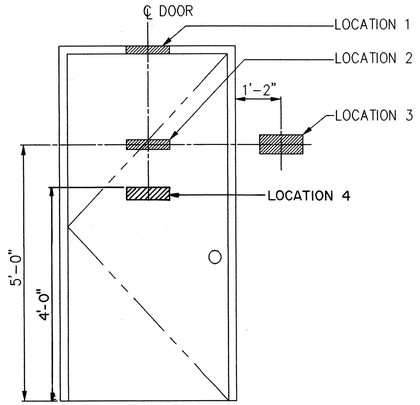

8 SIGN LOCATION KEY
NO SCALE

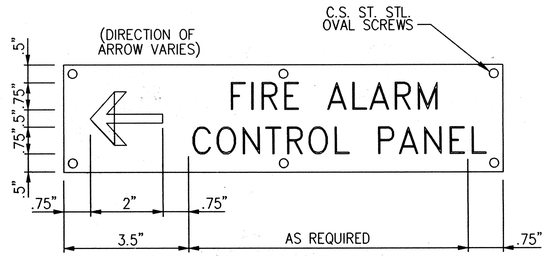

REFLECTIVE RED WITH WHITE BACKGROUND, ENAMEL

2 SIGN TYPE A.2 – HELVETICA BOLD Uc
NO SCALE

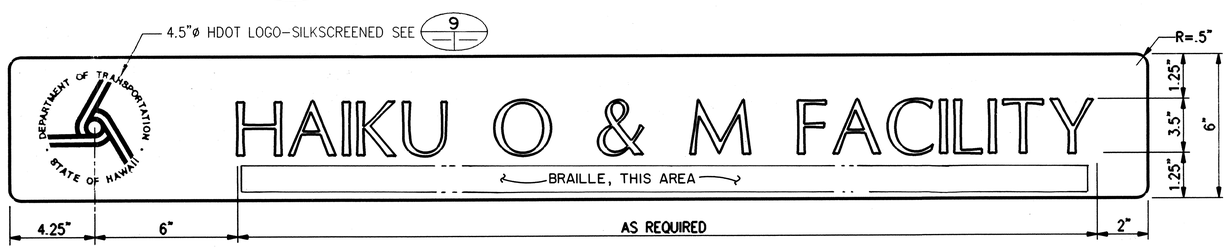

WHITE FIELD WITH COBALT BLUE COPY

6 SIGN TYPE C.1 – OPTIMA REG.
NO SCALE

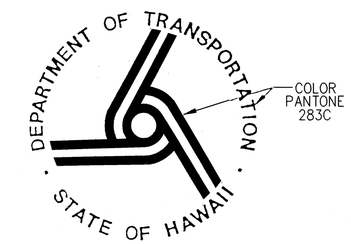

9 HDOT LOGO
NO SCALE

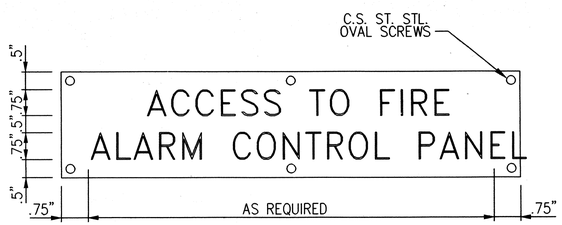

REFLECTIVE RED WITH WHITE BACKGROUND, ENAMEL

3 SIGN TYPE A.3 – HELVETICA BOLD Uc
NO SCALE

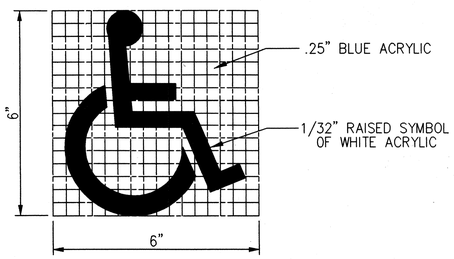

7 SIGN TYPE C.2
NO SCALE

GRAPHIC SCALE:
4' 0' 6' 12'
3/16" = 1'-0"

DATE	REVISION

STATE OF HAWAII
DEPARTMENT OF TRANSPORTATION
HIGHWAYS DIVISION

IDENTIFYING DEVICES-I

COMMOM WORK
H-3 FINISH (UNIT III)
FAIP NO. I-H3-1(75), UNIT III
T.K. TUNNEL/ACCESS ROADS

SCALE: AS NOTED DATE: JUN 1995

SHEET NO. 7T3 OF 4 SHEETS

STANLEY M.O.T. CHANG
LICENSED PROFESSIONAL ENGINEER
No. 8212-C
HAWAII, U.S.A.

THIS WORK WAS PREPARED BY ME OR UNDER MY SUPERVISION

Stanley M O T Chang

		DATE
SURVEY PLOTTED BY		
DRAWN BY	CADD	01/03/92
TRACED BY		
DESIGNED BY	A. MONIZ	01/03/92
QUANTITIES BY		
CHECKED BY	D. MCCORMICK	01/10/92

ORIGINAL PLAN
NOTEBOOK
No.

h3-6ai2 -h3/c6 -03-06-92

FED. ROAD DIST. NO.	STATE	FED. AID PROJ. NO.	FISCAL YEAR	SHEET NO.	TOTAL SHEETS
HAWAII	HAW.	I-H3-1(75) UNIT III	1994	305	353

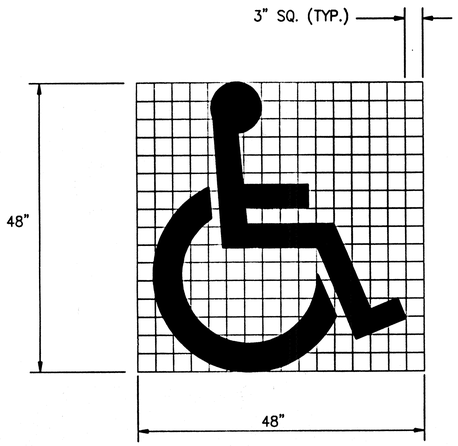

4" WHITE THERMOPLASTIC PAVEMENT MARKING

HANDICAP PAVEMENT MARKING (10) 3C4 | 7T4 5C30 6C11

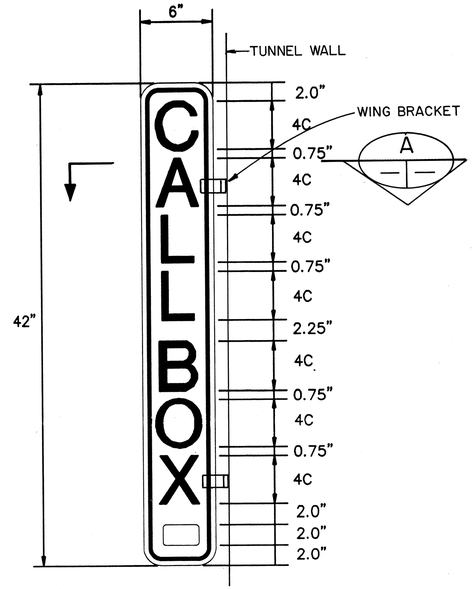

TYPE
BLACK ON WHITE
(REFLECTIVE)

CALLBOX SIGN (11)

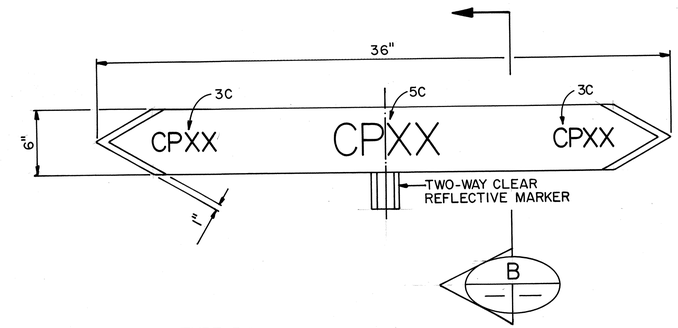

TYPE D.1
GREEN ON WHITE (REFLECTIVE)

EXPLORATORY TUNNEL LOCATION SIGN (12)
CP2 THRU CP9

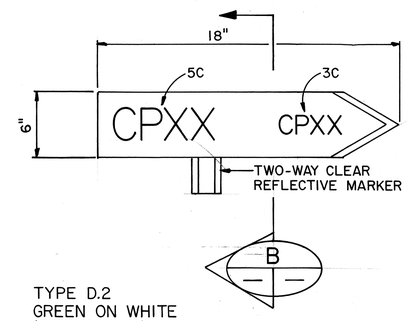

TYPE D.2
GREEN ON WHITE
(REFLECTIVE)

EXPLORATORY TUNNEL LOCATION SIGN (13)
CP1
CP10 (OPP. HAND)

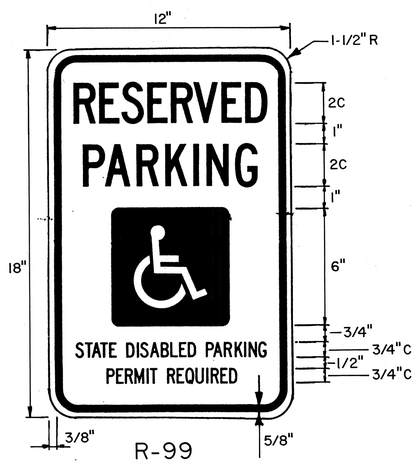

HANDICAP PARKING SIGN (14) 3C4 | 7T4 5C30 6C11

LEGEND — GREEN (REFL.)
SYMBOL — BLUE (REFL.)
BACKGROUND — WHITE (REFL.)

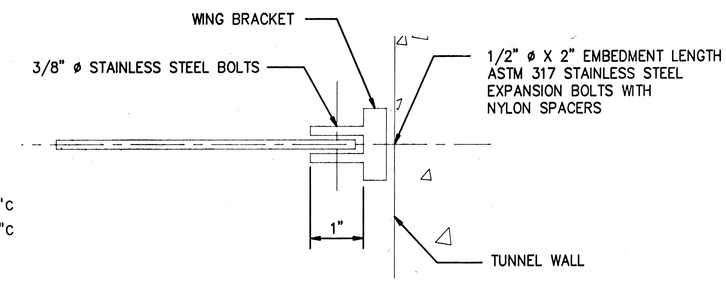

TUNNEL WALL MOUNTING SECTION (A)

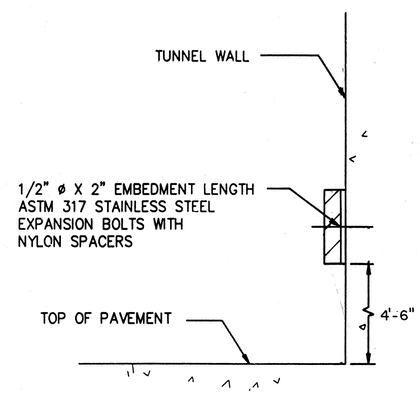

SECTION (B)

DATE	REVISION
10/13/95	ADDENDUM 1

STATE OF HAWAII
DEPARTMENT OF TRANSPORTATION
HIGHWAYS DIVISION

IDENTIFYING DEVICES-2

COMMON WORK

H-3 FINISH (UNIT III)
FAIP NO. I-H3-1(75), UNIT III
T.K. TUNNEL/ACCESS ROADS

SCALE: NONE DATE: JUN 1995

SHEET NO. 7T4 OF 4 SHEETS

STANLEY M.O.T. CHING
LICENSED PROFESSIONAL ENGINEER
No. 6312-C
HAWAII, U.S.A.

THIS WORK WAS PREPARED BY ME OR UNDER MY SUPERVISION
Stanley M.O.T. Ching

SURVEY PLOTTED BY
DRAWN BY
TRACED BY
DESIGNED BY
QUANTITIES BY
CHECKED BY
DATE
ORIGINAL PLAN
NOTE BOOK
No.

FED. ROAD DIST. NO.	STATE	FED. AID PROJ. NO.	FISCAL YEAR	SHEET NO.	TOTAL SHEETS
HAWAII	HAW.	I-H3-1(75) UNIT III	1994	305 S-1	353

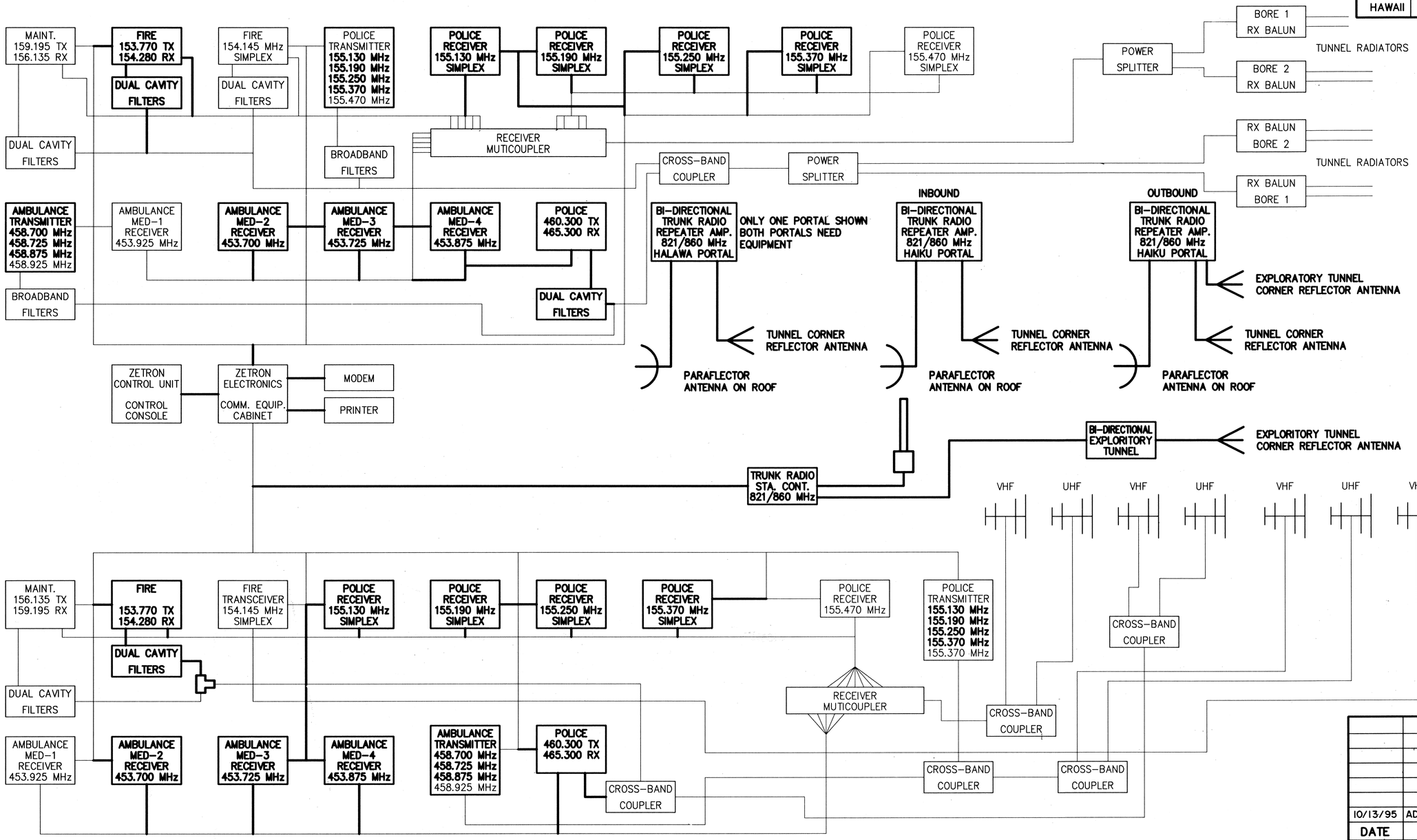

FOR DETAIL AS-BUILT INFORMATION REFER TO CONSTRUCTION SUBMITTALS

NOTE:

1. HIGHLIGHTED ITEMS (BOLD LINETYPE) TO BE PROVIDED BY CONTRACTOR, ALL OTHER ITEMS ARE EXISTING.

10/13/95	ADDENDUM I
DATE	REVISION

STATE OF HAWAII
DEPARTMENT OF TRANSPORTATION
HIGHWAYS DIVISION

BLOCK DIAGRAM RADIO EQUIPMENT

COMMON WORK

H-3 FINISH (UNIT III)

FAIP NO. I-H3-1(75), UNIT III

T.K. TUNNEL / ACCESS ROADS

SCALE: 1" = 20'-0" DATE: OCT 1995

GLEN J. FROMM LICENSED PROFESSIONAL ENGINEER No.8561-C HAWAII, U.S.A.

THIS WORK WAS PREPARED BY ME OR UNDER MY SUPERVISION

SHEET NO. 7T4A OF 4 SHEETS

ORIGINAL PLAN	SURVEY PLOTTED BY	DATE 10/04/95
	DRAWN BY	10/04/95
	TRACED BY	10/04/95
NOTEBOOK	DESIGNED BY W.ANDERSON	
	QUANTITIES BY	10/04/95
No.	CHECKED BY G.FROMM	

H375BD2 -h3\c4 -10-04-95

ADD. 305 S-1

FED. ROAD DIST. NO.	STATE	FED. AID PROJ. NO.	FISCAL YEAR	SHEET NO.	TOTAL SHEETS
HAWAII	HAW.	I-H3-1(75) UNIT III	1994	305 S-2	353

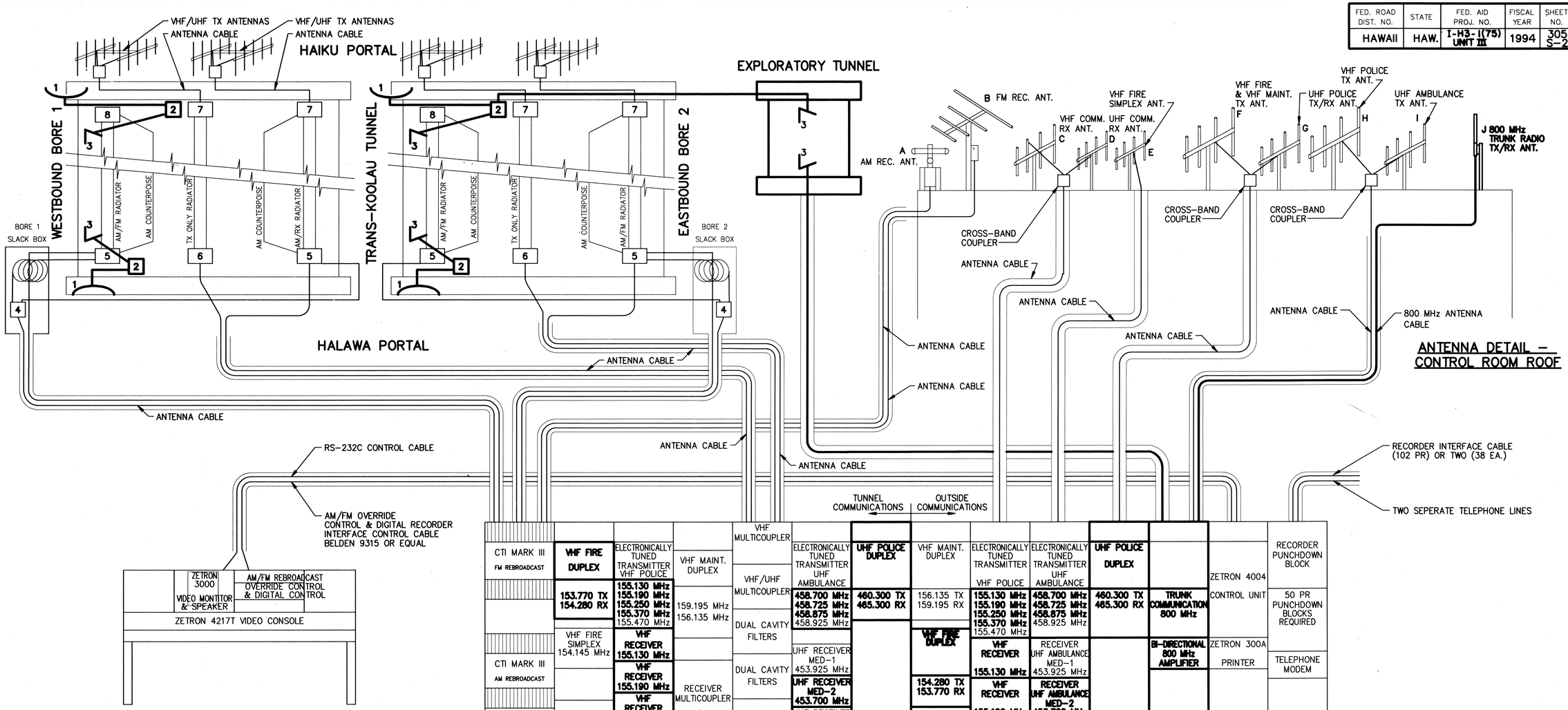

DETAIL – COMMUNICATION AND REBROADCAST ENCLOSURES

TUNNEL EQUIPMENT IDENTIFICATION

1. PARAFLECTOR 800 MHz ANT. (4 REQ'D)
2. BI-DIRECTIONAL 800 MHz AMPLIFIER. (4 REQ'D)
3. CORNER REFLECTOR ANTS. (4 REQ'D)

ANTENNA IDENTIFICATION

J 800 MHz TRUNK RADIO ANT.

NOTE:

1. HIGHLIGHTED ITEMS (BOLD LINETYPE) TO BE PROVIDED BY CONTRACTOR, ALL OTHER ITEMS ARE EXISTING.

SURVEY PLOTTED BY	DATE 10/04/95
DRAWN BY	10/04/95
TRACED BY	10/04/95
DESIGNED BY	W.ANDERSON
QUANTITIES BY	10/04/95
CHECKED BY	G.FROHM
ORIGINAL PLAN	
NOTEBOOK	
No.	

DATE	REVISION
10/13/95	ADDENDUM I

GLEN J. FROHM LICENSED PROFESSIONAL ENGINEER No.8561-C HAWAII, U.S.A.

THIS WORK WAS PREPARED BY ME OR UNDER MY SUPERVISION

STATE OF HAWAII
DEPARTMENT OF TRANSPORTATION
HIGHWAYS DIVISION

RADIO EQUIPMENT LAYOUT CONTROL CENTER

HAIKU APPROACH

INTERSTATE ROUTE H-3

F.A.I. PROJ. NO. I-H3-1(75)

SCALE: 1" = 20'-0" DATE: OCT 1995

SHEET NO. 7T4B OF 4 SHEETS

H375BD1 -h3\c4 -10-04-95

ADD. 305 S-2

FED. ROAD DIST. NO.	STATE	FED. AID PROJ. NO.	FISCAL YEAR	SHEET NO.	TOTAL SHEETS
HAWAII	HAW.	I-H3-1(75) UNIT III	1994	305 S-3	353

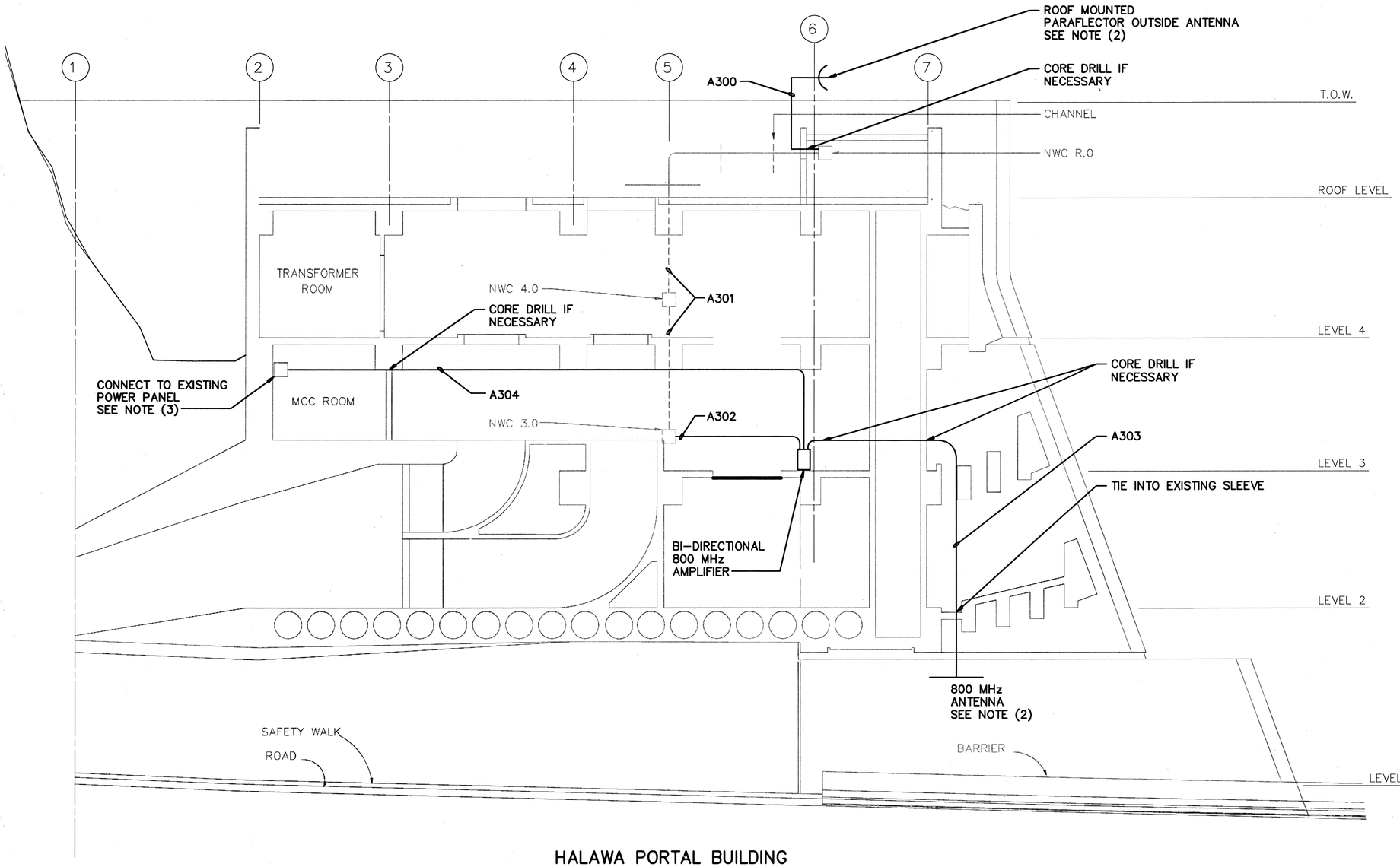

HALAWA PORTAL BUILDING
INBOUND ELEVATION

NOTE:

1. SEE 3T3 FOR CONDUIT / CABLE SCHEDULE
2. CONTRACTOR TO LOCATE ANTENNA FOR MAXIMUM RECEPTION / TRANSMISSION.
3. CONTRACTOR SHALL SUPPLY AND INSTALL 20 AMP CIRCUIT BREAKER FOR BI-DIRECTIONAL AMPLIFIER.

GRAPHIC SCALE:
8' 4' 0' 8' 16'
1/8" = 1'-0"

GLEN J. FROMM LICENSED PROFESSIONAL ENGINEER No.8561-C HAWAII, U.S.A.

THIS WORK WAS PREPARED BY ME OR UNDER MY SUPERVISION

DATE	REVISION
10/13/95	ADDENDUM I

STATE OF HAWAII
DEPARTMENT OF TRANSPORTATION
HIGHWAYS DIVISION

800 MHz RADIO REBROADCAST CONDUITS – SECTION B

COMMON WORK
H-3 FINISH (UNIT III)
FAIP NO. I-H3-1(75), UNIT III
T.K. TUNNEL / ACCESS ROADS

SCALE: 1/8" = 1'-0" DATE: OCT 1995

SHEET NO. 7T4C OF 4 SHEETS

		DATE
SURVEY PLOTTED BY		
DRAWN BY	CADD	10/04/95
TRACED BY		
DESIGNED BY	W.ANDERSON	10/04/95
QUANTITIES BY		
CHECKED BY	G.FROMM	10/04/95
ORIGINAL PLAN		
NOTEBOOK		
No.		

H375TN6 -h3/c4 -10-04-95

ADD. 305 S-3

FED. ROAD DIST. NO.	STATE	FED. AID PROJ. NO.	FISCAL YEAR	SHEET NO.	TOTAL SHEETS
HAWAII	HAW.	I-H3-1(75) UNIT III	1994	305 S-4	353

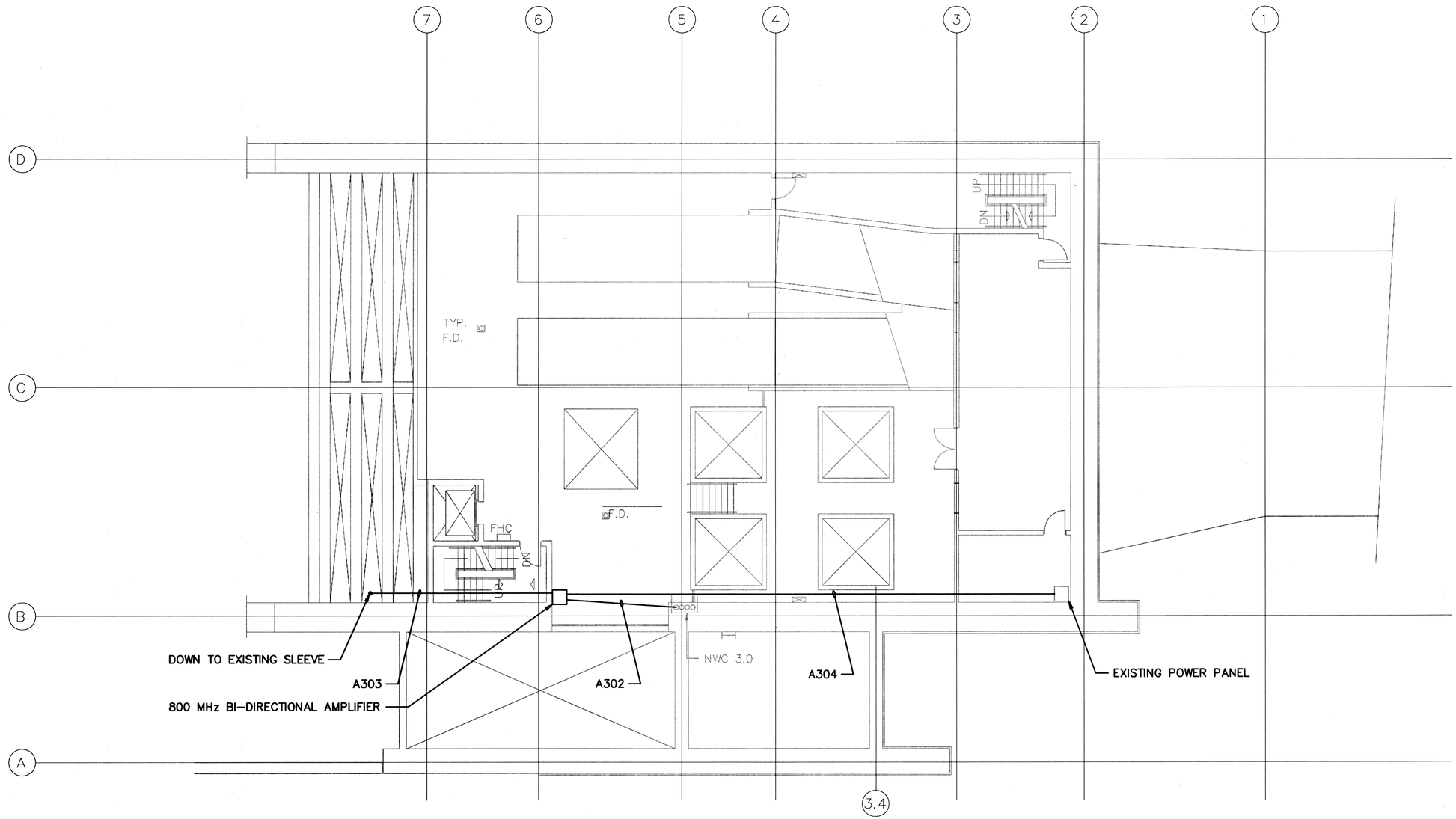

HALAWA PORTAL BUILDING
INBOUND PLAN

NOTE:

1. SEE 3T3 FOR CONDUIT / CABLE SCHEDULE

GRAPHIC SCALE:
8' 4' 0' 8' 16'
1/8" = 1'-0"

10/13/95	ADDENDUM 1
DATE	REVISION

STATE OF HAWAII
DEPARTMENT OF TRANSPORTATION
HIGHWAYS DIVISION

800 MHz RADIO REBROADCAST CONDUITS – LEVEL 3

COMMON WORK
H-3 FINISH (UNIT III)
FAIP NO. I-H3-1(75), UNIT III
T.K. TUNNEL / ACCESS ROADS

GLEN J. FROMM
LICENSED PROFESSIONAL ENGINEER
No.8561-C
HAWAII, U.S.A.

THIS WORK WAS PREPARED BY ME OR UNDER MY SUPERVISION

SCALE: 1/8" = 1'-0" DATE: OCT 1995

SHEET NO.7T4D OF 4 SHEETS

ORIGINAL PLAN	SURVEY PLOTTED BY GAND	DATE 10/04/95
	DRAWN BY	10/04/95
	TRACED BY	10/04/95
NOTEBOOK	DESIGNED BY W.ANDERSON	10/04/95
No.	QUANTITIES BY	10/04/95
	CHECKED BY G.FROMM	10/04/95

H375TN3 -h3\c4 -10-04-95

ADD. 305 S-4

FED. ROAD DIST. NO.	STATE	FED. AID PROJ. NO.	FISCAL YEAR	SHEET NO.	TOTAL SHEETS
HAWAII	HAW.	I-H3-1(75) UNIT III	1994	305 S-5	353

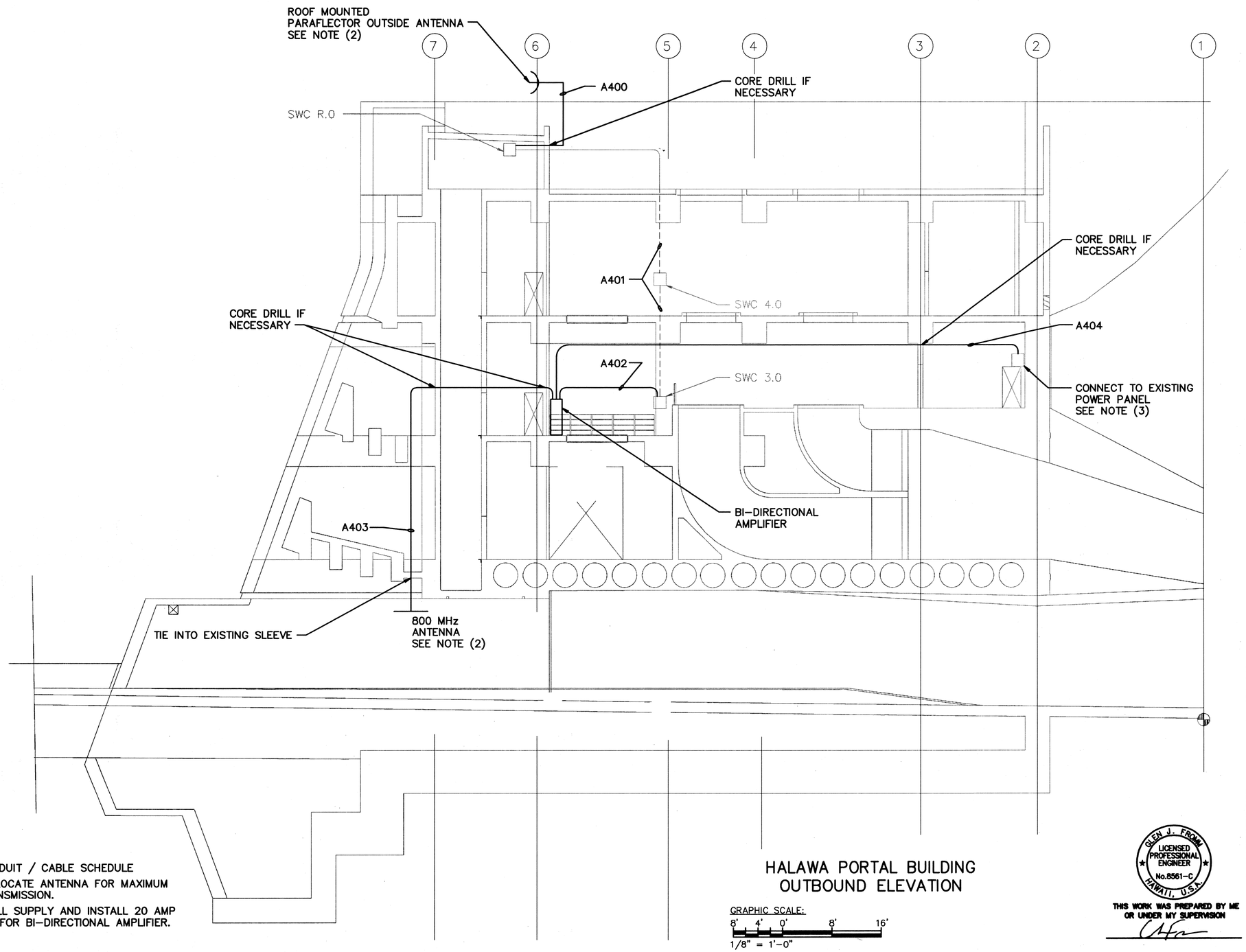

NOTE:

1. SEE 3T3 FOR CONDUIT / CABLE SCHEDULE
2. CONTRACTOR TO LOCATE ANTENNA FOR MAXIMUM RECEPTION / TRANSMISSION.
3. CONTRACTOR SHALL SUPPLY AND INSTALL 20 AMP CIRCUIT BREAKER FOR BI-DIRECTIONAL AMPLIFIER.

HALAWA PORTAL BUILDING
OUTBOUND ELEVATION

GRAPHIC SCALE:
8' 4' 0' 8' 16'
1/8" = 1'-0"

GLEN J. FROMM
LICENSED PROFESSIONAL ENGINEER
No.8561-C
HAWAII, U.S.A.

THIS WORK WAS PREPARED BY ME OR UNDER MY SUPERVISION

DATE	REVISION
10/13/95	ADDENDUM I

STATE OF HAWAII
DEPARTMENT OF TRANSPORTATION
HIGHWAYS DIVISION

800 MHz RADIO REBROADCAST CONDUITS – SECTION B

COMMON WORK
H-3 FINISH (UNIT III)
FAIP NO. I-H3-1(75), UNIT III
T.K. TUNNEL / ACCESS ROADS

SCALE: 1/8" = 1'-0" DATE: OCT 1995

SHEET NO. 7T4E OF 4 SHEETS

		DATE
ORIGINAL PLAN	SURVEY PLOTTED BY	10/04/95
	DRAWN BY CADD	10/04/95
NOTEBOOK	TRACED BY W.ANDERSON	10/04/95
	DESIGNED BY	10/04/95
No.	QUANTITIES BY	10/04/95
	CHECKED BY G.FROMM	

H375106 -h3\c4 -10-04-95

ADD. 305 S-5

FED. ROAD DIST. NO.	STATE	FED. AID PROJ. NO.	FISCAL YEAR	SHEET NO.	TOTAL SHEETS
HAWAII	HAW.	I-H3-1(75) UNIT III	1994	305 S-6	353

N

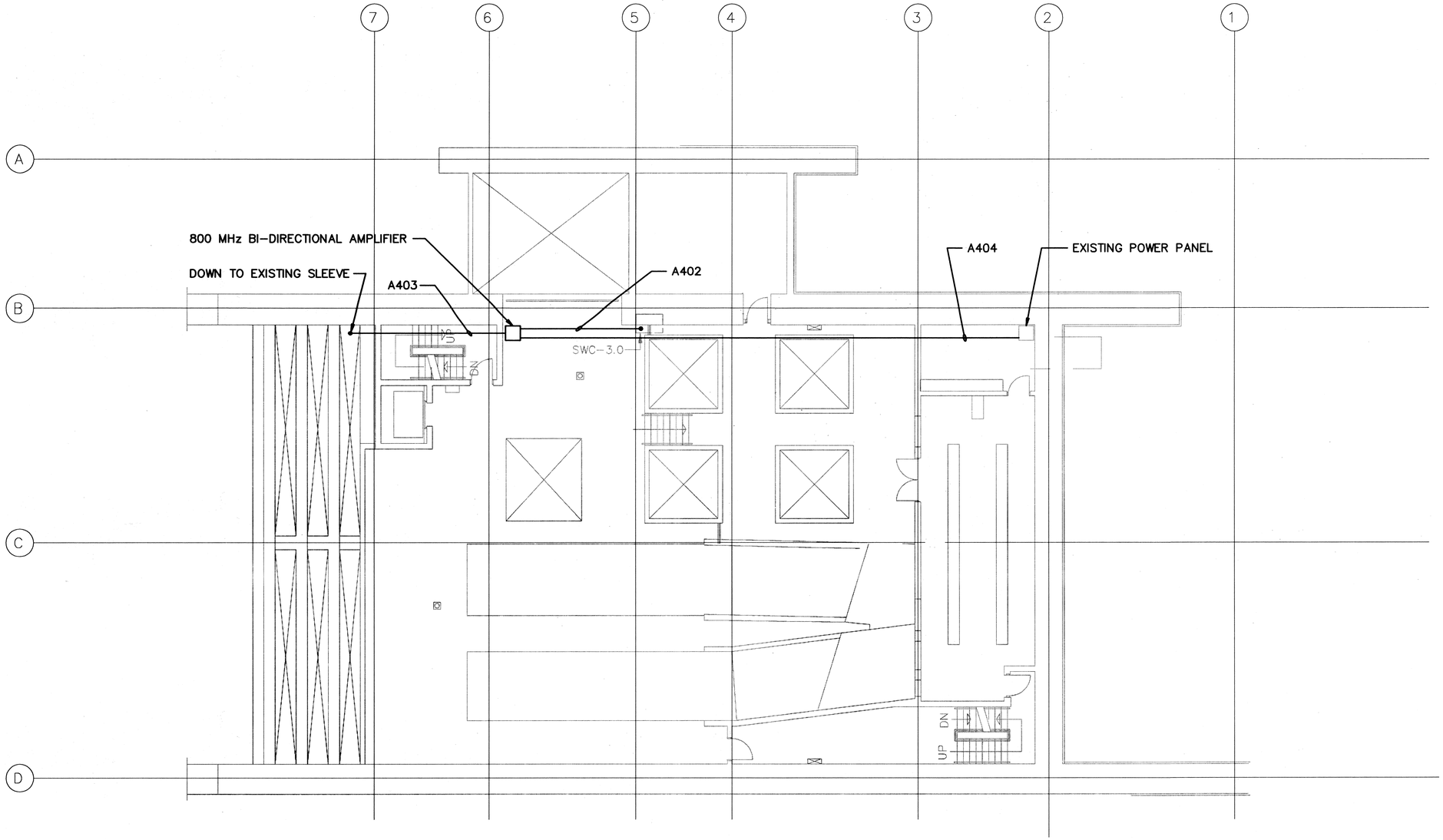

HALAWA PORTAL BUILDING
OUTBOUND PLAN

NOTE:

1. SEE 3T3 FOR CONDUIT / CABLE SCHEDULE

GRAPHIC SCALE:
8' 4' 0' 8' 16'
1/8" = 1'-0"

GLEN J. FROMM
LICENSED PROFESSIONAL ENGINEER
No. 8561-C
HAWAII, U.S.A.

THIS WORK WAS PREPARED BY ME OR UNDER MY SUPERVISION

DATE	REVISION
10/13/95	ADDENDUM 1

STATE OF HAWAII
DEPARTMENT OF TRANSPORTATION
HIGHWAYS DIVISION

800 MHz RADIO REBROADCAST CONDUITS – LEVEL 3

COMMON WORK
H-3 FINISH (UNIT III)
FAIP NO. I-H3-1(75), UNIT III
T.K. TUNNEL / ACCESS ROADS

SCALE: 1/8" = 1'-0" DATE: OCT 1995

SHEET NO. 7T4F OF 4 SHEETS

ORIGINAL PLAN		DATE
	SURVEY PLOTTED BY	
	DRAWN BY CADD	10/04/95
	TRACED BY	10/04/95
NOTEBOOK	DESIGNED BY W. ANDERSON	10/04/95
	QUANTITIES BY	
No.	CHECKED BY G. FROMM	10/04/95

H375T03 -h3\c4 -10-04-95

ADD. 305 S-6

FED. ROAD DIST. NO.	STATE	FED. AID PROJ. NO.	FISCAL YEAR	SHEET NO.	TOTAL SHEETS
HAWAII	HAW.	I-H3-1(75) UNIT III	1994	305 S-7	353

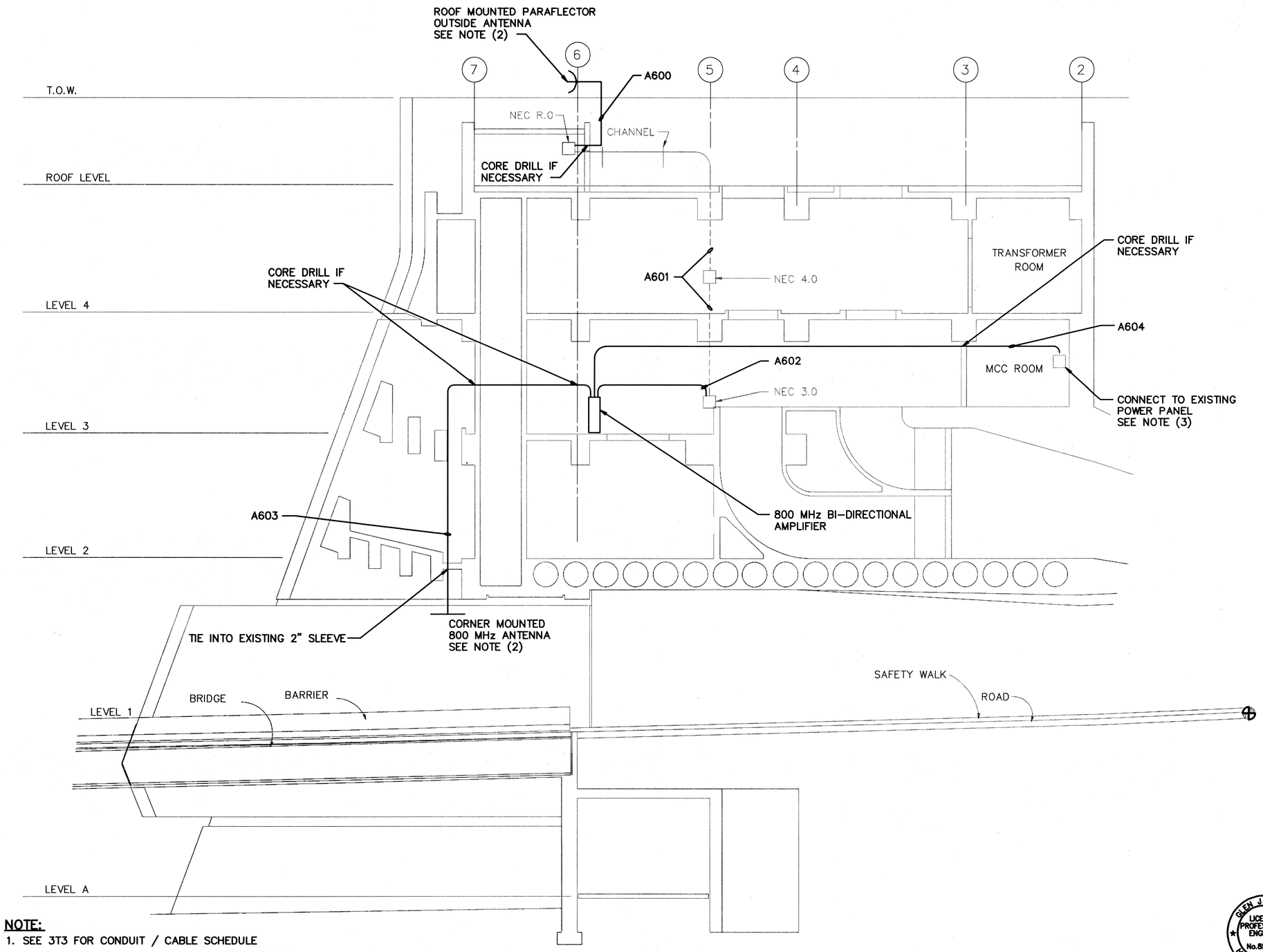

NOTE:

1. SEE 3T3 FOR CONDUIT / CABLE SCHEDULE
2. CONTRACTOR TO LOCATE ANTENNA FOR MAXIMUM RECEPTION / TRANSMISSION.
3. CONTRACTOR SHALL SUPPLY AND INSTALL 20 AMP CIRCUIT BREAKER FOR BI-DIRECTIONAL AMPLIFIER.

HAIKU PORTAL BUILDING
INBOUND ELEVATION

GRAPHIC SCALE:
8' 4' 0' 8' 16'
1/8" = 1'-0"

ORIGINAL PLAN		DATE
	SURVEY PLOTTED BY CADD	10/04/95
	DRAWN BY	
NOTEBOOK	TRACED BY	10/04/95
	DESIGNED BY W.ANDERSON	10/04/95
No.	QUANTITIES BY	
	CHECKED BY G.FROMM	10/04/95

GLEN J. FROMM
LICENSED PROFESSIONAL ENGINEER
No.8561-C
HAWAII, U.S.A.

THIS WORK WAS PREPARED BY ME OR UNDER MY SUPERVISION

DATE	REVISION
10/13/95	ADDENDUM I

STATE OF HAWAII
DEPARTMENT OF TRANSPORTATION
HIGHWAYS DIVISION

800 MHz RADIO REBROADCAST CONDUITS – SECTION B

COMMON WORK
H-3 FINISH (UNIT III)
FAIP NO. I-H3-1(75), UNIT III
T.K. TUNNEL / ACCESS ROADS

SCALE: 1/8" = 1'-0" DATE: OCT 1995

SHEET NO. 7T4G OF 4 SHEETS

H375TM7 -h3\c4 -10-04-95

ADD. 305 S-7

FED. ROAD DIST. NO.	STATE	FED. AID PROJ. NO.	FISCAL YEAR	SHEET NO.	TOTAL SHEETS
HAWAII	HAW.	I-H3-1(75) UNIT III	1994	305 S-8	353

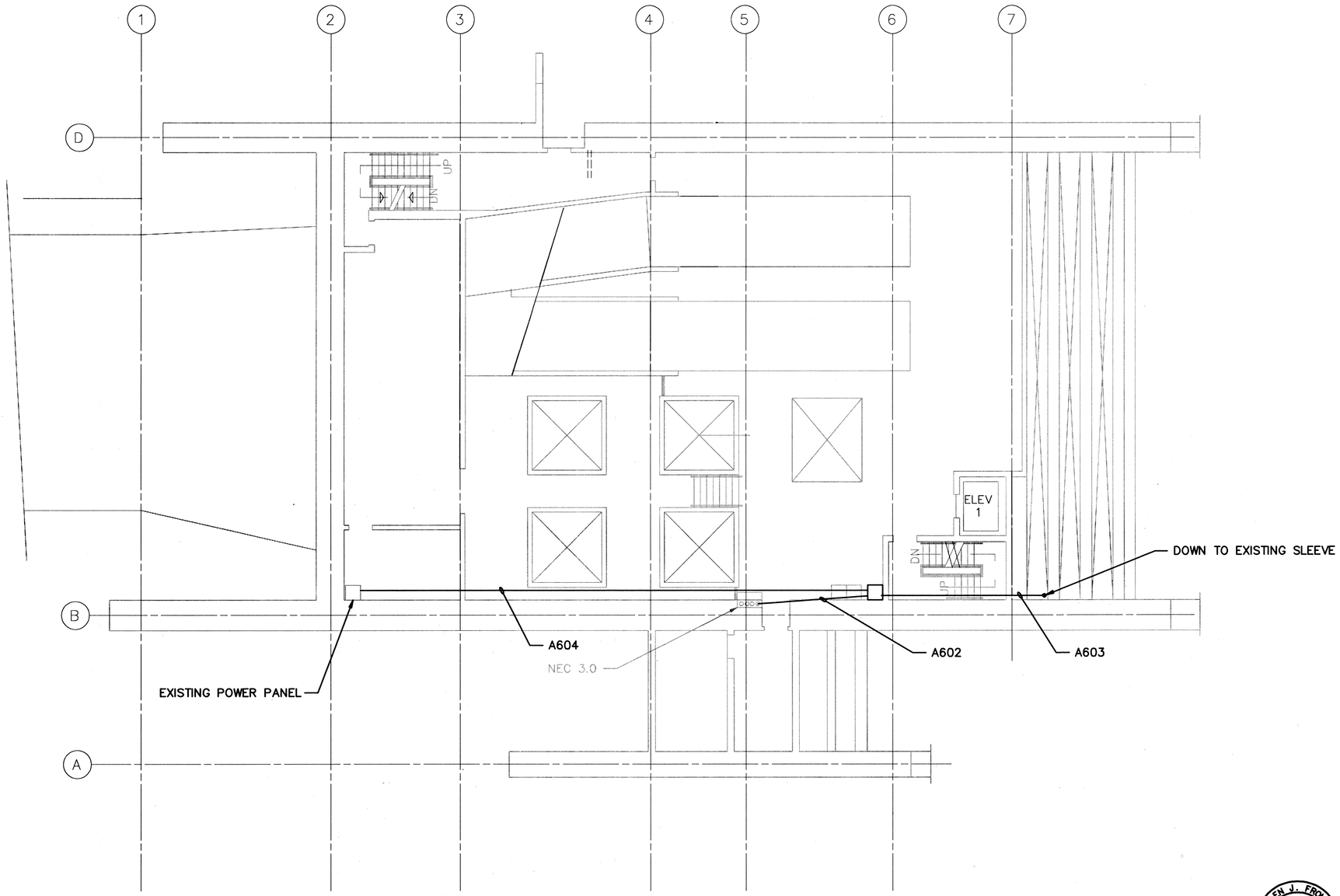

HAKIU PORTAL BUILDING
INBOUND PLAN

GRAPHIC SCALE:
8' 4' 0' 8' 16'
1/8" = 1'-0"

GLEN J. FROMM
LICENSED PROFESSIONAL ENGINEER
No.8561-C
HAWAII, U.S.A.

THIS WORK WAS PREPARED BY ME OR UNDER MY SUPERVISION

DATE	REVISION
10/13/95	ADDENDUM 1

STATE OF HAWAII
DEPARTMENT OF TRANSPORTATION
HIGHWAYS DIVISION

800 MHz RADIO REBROADCAST CONDUITS LEVEL 3

COMMON WORK
H-3 FINISH (UNIT III)
FAIP NO. I-H3-1(75), UNIT III
T.K. TUNNEL / ACCESS ROADS

SCALE: 1/8" = 1'-0" DATE: OCT 1995

SHEET NO.7T4H OF 4 SHEETS

ORIGINAL PLAN		DATE
	SURVEY PLOTTED BY	
	DRAWN BY CADD	10/04/95
	TRACED BY	
NOTEBOOK	DESIGNED BY W.ANDERSON	10/04/95
	QUANTITIES BY	
No.	CHECKED BY G.FROMM	10/04/95

H375TM4 -H3\C4 -10-04-95

ADD. 305 S-8

FED. ROAD DIST. NO.	STATE	FED. AID PROJ. NO.	FISCAL YEAR	SHEET NO.	TOTAL SHEETS
HAWAII	HAW.	I-H3-1(75) UNIT III	1994	305 S-9	353

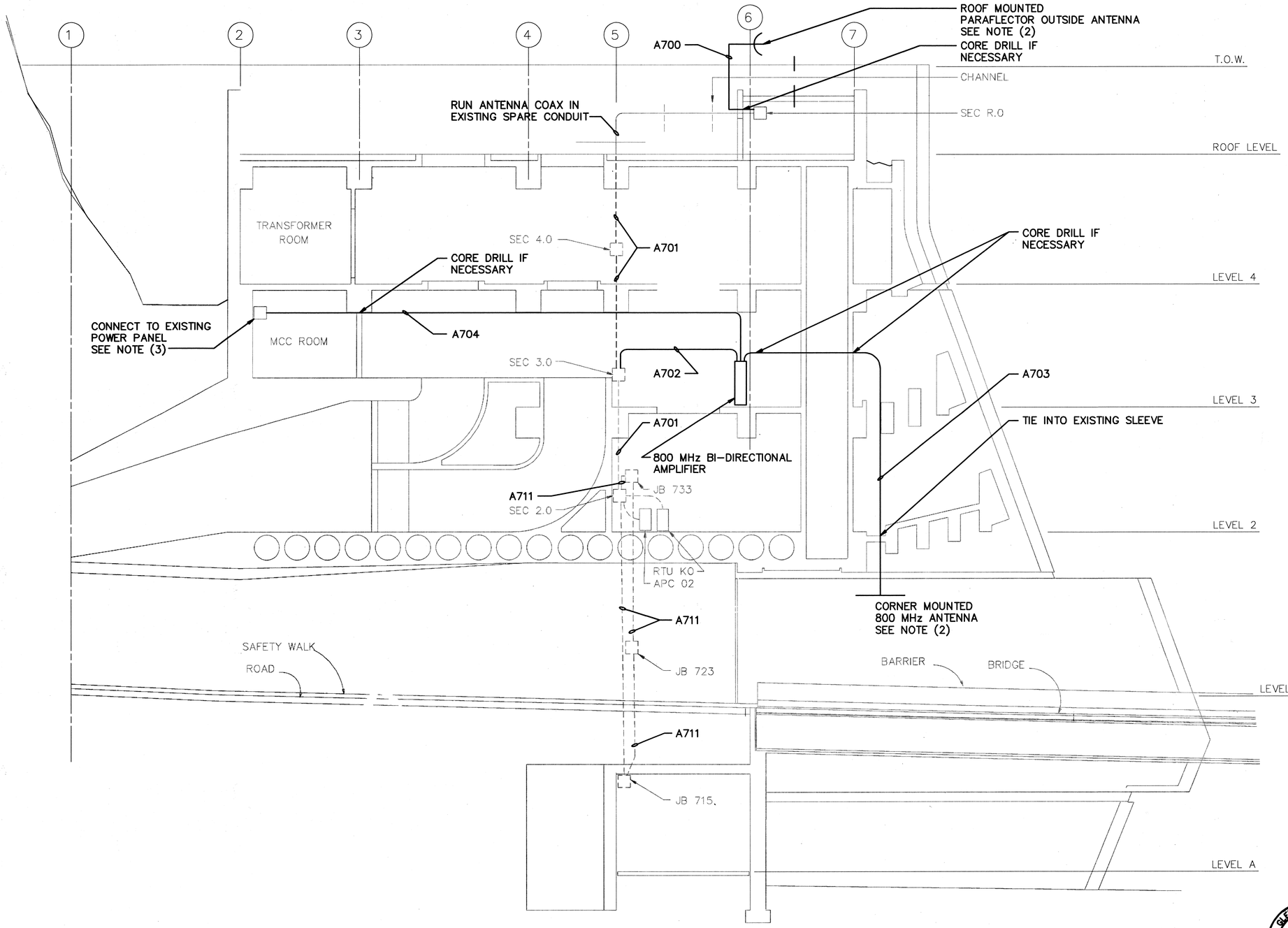

NOTE:

1. SEE 3T3 FOR CONDUIT / CABLE SCHEDULE
2. CONTRACTOR TO LOCATE ANTENNA FOR MAXIMUM RECEPTION / TRANSMISSION.
3. CONTRACTOR SHALL SUPPLY AND INSTALL 20 AMP CIRCUIT BREAKER FOR BI-DIRECTIONAL AMPLIFIER.

HAIKU PORTAL BUILDING
OUTBOUND ELEVATION

GRAPHIC SCALE:
8' 4' 0' 8' 16'
1/8" = 1'-0"

GLEN J. FROMM LICENSED PROFESSIONAL ENGINEER No.8561-C HAWAII, U.S.A.

THIS WORK WAS PREPARED BY ME OR UNDER MY SUPERVISION

DATE	REVISION
10/27/95	ADD.2 CONDUIT RUN FOR INTRUSION DETECTOR TO APC
10/13/95	ADD.1

STATE OF HAWAII
DEPARTMENT OF TRANSPORTATION
HIGHWAYS DIVISION

800 MHz RADIO REBROADCAST CONDUITS – SECTION B

COMMON WORK
H-3 FINISH (UNIT III)
FAIP NO. I-H3-1(75), UNIT III
T.K. TUNNEL / ACCESS ROADS

SCALE: 1/8" = 1'-0" DATE: OCT 1995

SHEET NO.7T4I OF 4 SHEETS

ADD. 305 S-9

ORIGINAL PLAN		DATE
	SURVEY PLOTTED BY	
	DRAWN BY CADD	10/18/95
	TRACED BY	
NOTEBOOK	DESIGNED BY W.ANDERSON	10/18/95
	QUANTITIES BY	
No.	CHECKED BY G.FROMM	10/18/95

H375TQ7 -h3/c4 -10-18-95

FED. ROAD DIST. NO.	STATE	FED. AID PROJ. NO.	FISCAL YEAR	SHEET NO.	TOTAL SHEETS
HAWAII	HAW.	I-H3-1(75) UNIT III	1994	305 S-10	353

N

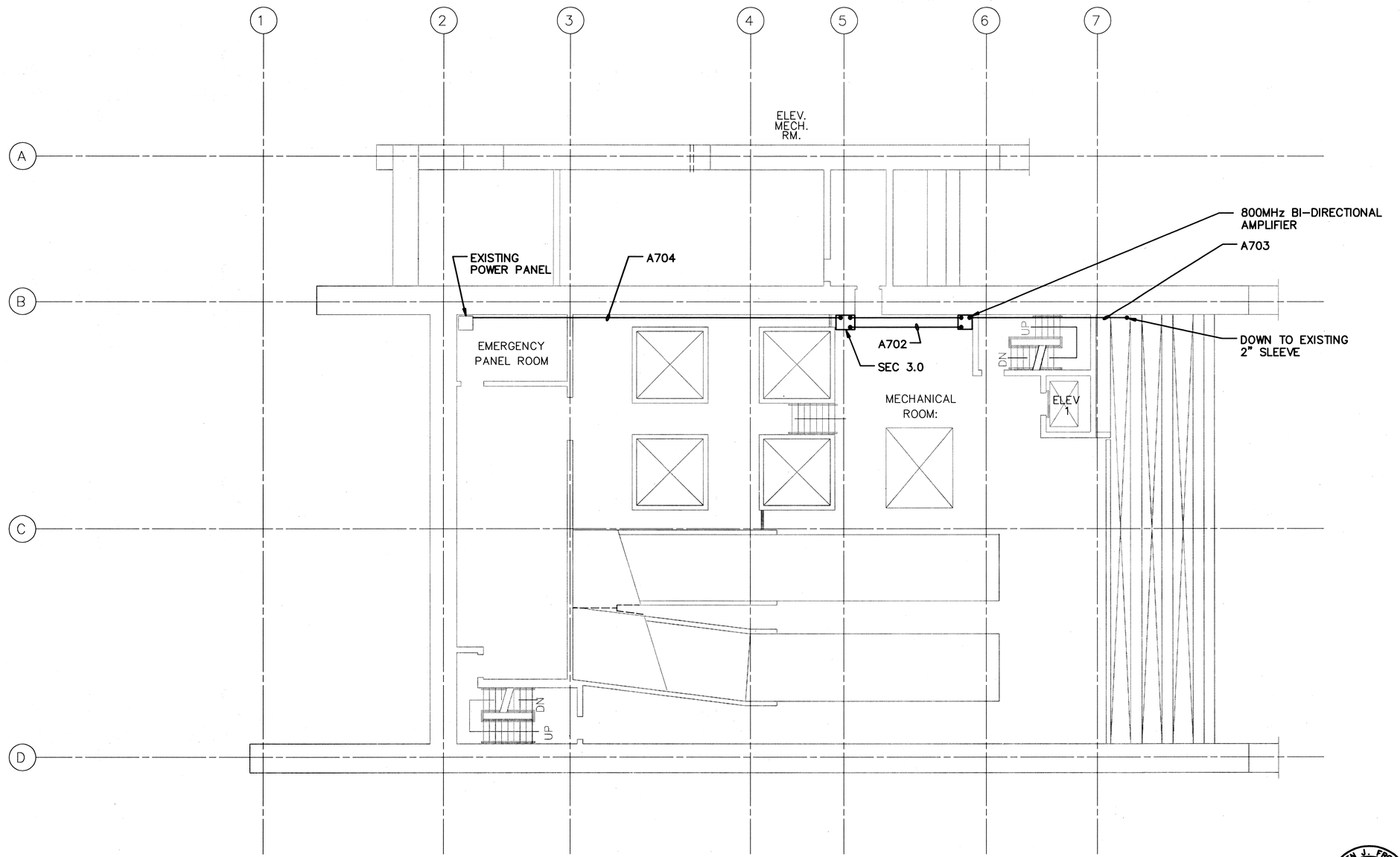

NOTE:

1. SEE 3T3 FOR CONDUIT / CABLE SCHEDULE

HAIKU PORTAL BUILDING
OUTBOUND PLAN

GRAPHIC SCALE:
8' 4' 0' 8' 16'
1/8" = 1'-0"

GLEN J. FROMM LICENSED PROFESSIONAL ENGINEER No.8561-C HAWAII, U.S.A.

THIS WORK WAS PREPARED BY ME OR UNDER MY SUPERVISION

DATE	REVISION
10/13/95	ADDENDUM 1

STATE OF HAWAII
DEPARTMENT OF TRANSPORTATION
HIGHWAYS DIVISION

800 MHz RADIO REBROADCAST CONDUITS – LEVEL 3

COMMON WORK
H-3 FINISH (UNIT III)
FAIP NO. I-H3-1(75), UNIT III
T.K. TUNNEL / ACCESS ROADS

SCALE: 1/8" = 1'-0" DATE: OCT 1995

SHEET NO. 7T4J OF 4 SHEETS

ORIGINAL PLAN	SURVEY PLOTTED BY: CADD DATE 10/04/95
	DRAWN BY:
	TRACED BY:
NOTEBOOK	DESIGNED BY: W.ANDERSON 10/04/95
	QUANTITIES BY:
No.	CHECKED BY: G.FROMM 10/04/95

H375TQ4 -h3/c4 -10-04-95

ADD. 305 S-10

FED. ROAD DIST. NO.	STATE	FED. AID PROJ. NO.	FISCAL YEAR	SHEET NO.	TOTAL SHEETS
HAWAII	HAW.	I-H3-1(75) UNIT III	1994	305 S-11	353

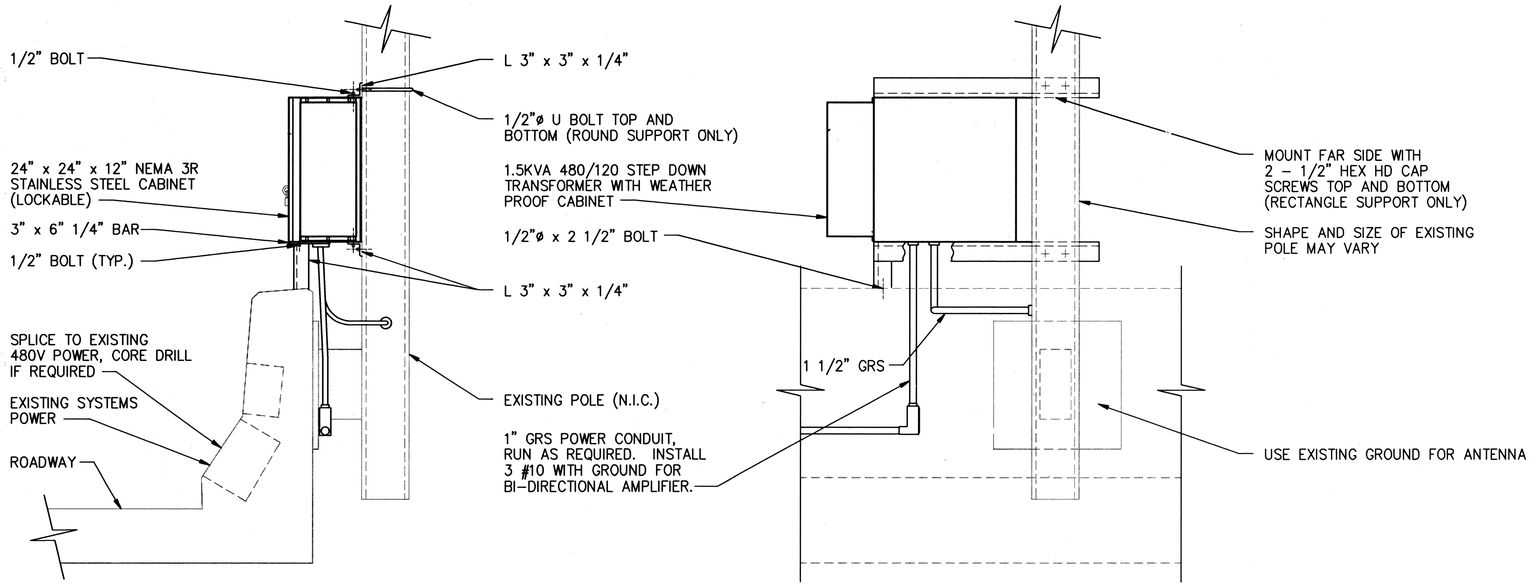

BI-DIRECTIONAL AMPLIFIER CABINET INSTALLATION DETAIL

NTS

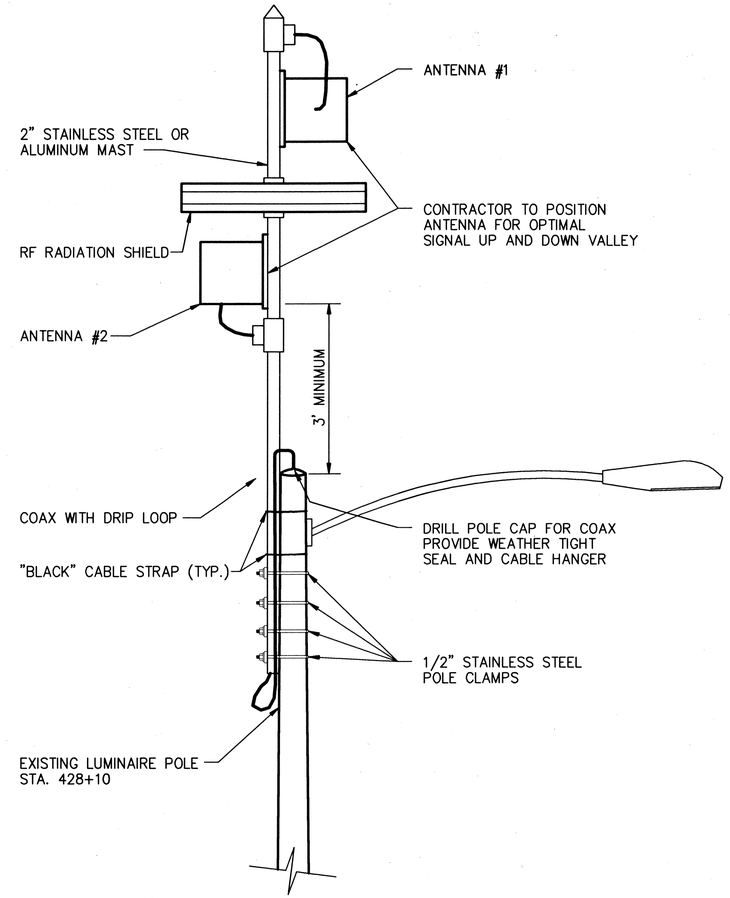

BI-DIRECTIONAL ANTENNA MOUNTING DETAIL

NTS

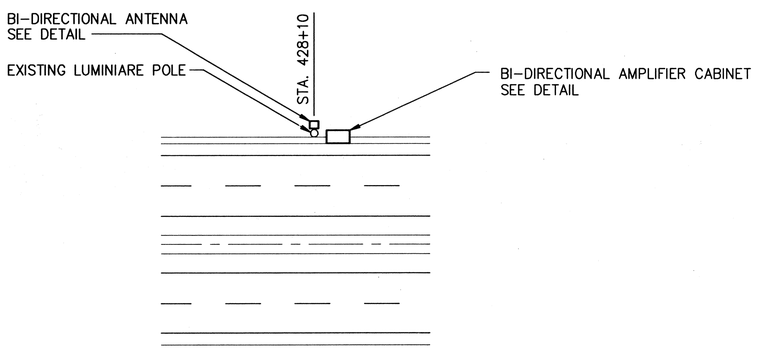

ROADWAY PARTIAL PLAN

NTS

10/13/95	ADDENDUM I
DATE	REVISION

STATE OF HAWAII
DEPARTMENT OF TRANSPORTATION
HIGHWAYS DIVISION

800 MHz RADIO REBROADCAST REPEATER STATION (STA. 426+80)

HAIKU APPROACH

INTERSTATE ROUTE H-3

F.A.I. PROJ. NO. I-H3-1(75)

SCALE: 1" = 20'-0" DATE: OCT 1995

SHEET NO. 7T4K OF 4 SHEETS

GLEN J. FROMM LICENSED PROFESSIONAL ENGINEER No. 8561-C HAWAII, U.S.A.

THIS WORK WAS PREPARED BY ME OR UNDER MY SUPERVISION

ORIGINAL PLAN		
	SURVEY PLOTTED BY	DATE 10/04/95
	DRAWN BY CADD	" 10/03/95
	TRACED BY	"
NOTEBOOK	DESIGNED BY W.ANDERSON	" 10/03/95
	QUANTITIES BY	"
No.	CHECKED BY G.FROMM	" 10/03/95

H375DTL1 -h3\c4 -10-04-95

ADD. 305 S-11

FED. ROAD DIST. NO.	STATE	FED. AID PROJ. NO.	FISCAL YEAR	SHEET NO.	TOTAL SHEETS
HAWAII	HAW.	I-H3-1(75) UNIT III	1994	305 S-12	353

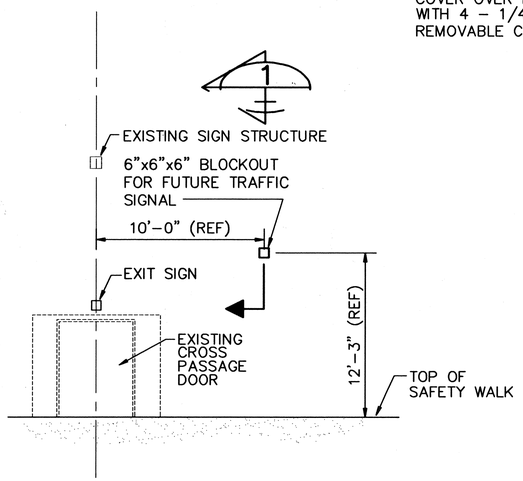

ELEVATION AT CROSSPASSAGE
NTS

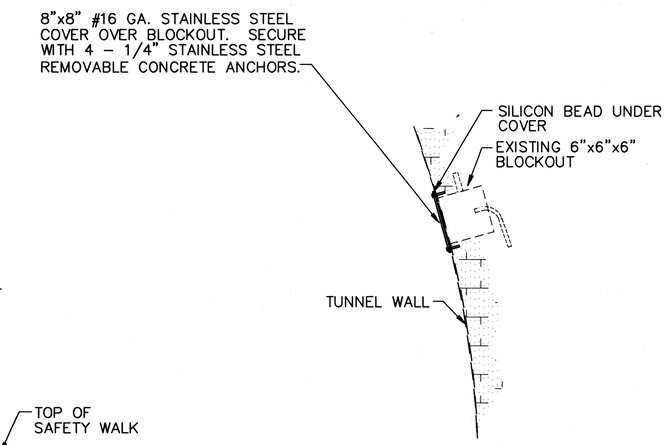

SECTION 1
NTS

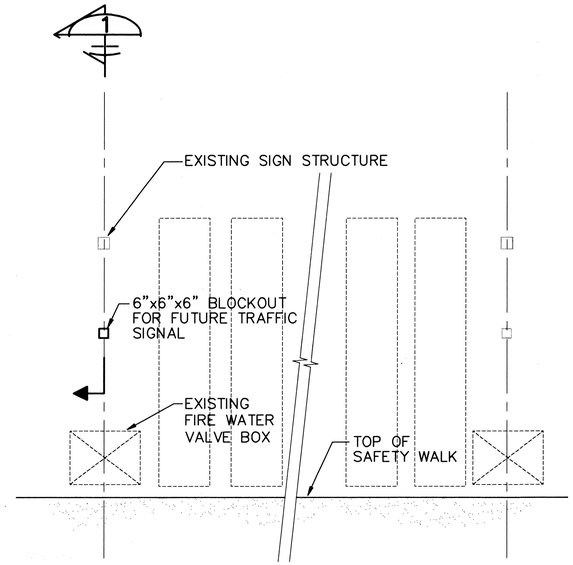

ELEVATION BETWEEN CROSSPASSAGES
NTS

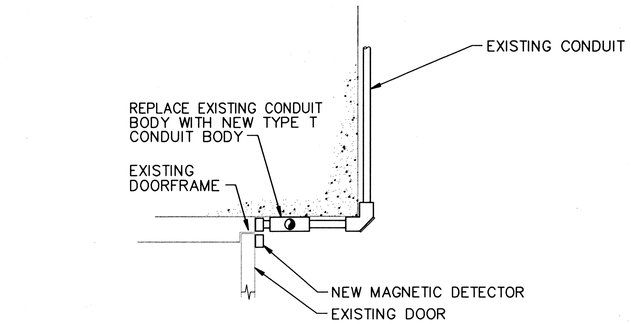

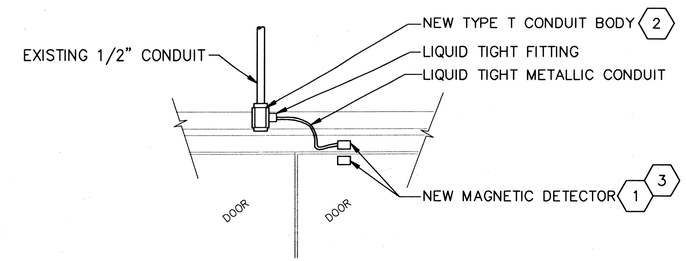

1. INSTALL NEW MAGNETIC CONTACT ON UNPROTECTED EXISTING DOOR. SHIM AS REQUIRED FOR PROPER OPERATION.
2. DISCONNECT EXISTING MAGNETIC DETECTOR, PULL WIRE BACK TO PULLING ELBOW, INSTALL NEW CONDUIT. SPLICE NEW MAGNETIC CONTACT TO EXISTING CIRCUIT AS REQUIRED FOR OPERATION ON EXISTING LEAD-IN.
3. FIELD VERIFY AND MATCH EXISTING CONTACT OPERATION (N.O. OR N.C.).

CROSSPASSAGE DOOR INTRUSION DETECTOR INSTALLATION
NTS

DEVICE	STATION	HIGHWAY	SIGN FACES TRAFFIC MOVING	SIGN BRIDGE	CNTR.	MOUNTING
TS 19 (F)	623+10	H3 OB (TNL)	OB	N/A	TC (F) 07	TUNNEL WALL VERTICAL SUPPORT
TS 22 (F)	623+10	H3 OB (TNL)	IB	N/A	TC (F) 07	TUNNEL WALL VERTICAL SUPPORT
TS 22.1 (F)	623+10	H3 OB (TNL)	OB	N/A	TC (F) 07	TUNNEL WALL VERTICAL SUPPORT
TS 27 (F)	633+10	H3 OB (TNL)	OB	N/A	TC (F) 09	TUNNEL WALL VERTICAL SUPPORT
TS 30 (F)	633+10	H3 OB (TNL)	IB	N/A	TC (F) 09	TUNNEL WALL VERTICAL SUPPORT
TS 30.1 (F)	633+10	H3 OB (TNL)	OB	N/A	TC (F) 09	TUNNEL WALL VERTICAL SUPPORT
TS 35 (F)	643+10	H3 OB (TNL)	OB	N/A	TC (F) 10	TUNNEL WALL VERTICAL SUPPORT
TS 38 (F)	643+10	H3 OB (TNL)	IB	N/A	TC (F) 10	TUNNEL WALL VERTICAL SUPPORT
TS 38.1 (F)	643+10	H3 OB (TNL)	OB	N/A	TC (F) 10	TUNNEL WALL VERTICAL SUPPORT
TS 43 (F)	652+85	H3 OB (TNL)	OB	N/A	TC (F) 12	TUNNEL WALL VERTICAL SUPPORT
TS 46 (F)	652+85	H3 OB (TNL)	IB	N/A	TC (F) 12	TUNNEL WALL VERTICAL SUPPORT
TS 46.1 (F)	652+85	H3 OB (TNL)	OB	N/A	TC (F) 12	TUNNEL WALL VERTICAL SUPPORT
TS 65 (F)	623+00	H3 OB (TNL)	OB	N/A	TC (F) 07	TUNNEL WALL VERTICAL SUPPORT
TS 65.1 (F)	623+00	H3 OB (TNL)	IB	N/A	TC (F) 07	TUNNEL WALL VERTICAL SUPPORT
TS 68 (F)	623+00	H3 OB (TNL)	IB	N/A	TC (F) 07	TUNNEL WALL VERTICAL SUPPORT
TS 73 (F)	632+75	H3 OB (TNL)	OB	N/A	TC (F) 09	TUNNEL WALL VERTICAL SUPPORT
TS 73.1 (F)	632+75	H3 OB (TNL)	IB	N/A	TC (F) 09	TUNNEL WALL VERTICAL SUPPORT
TS 76 (F)	632+75	H3 OB (TNL)	IB	N/A	TC (F) 09	TUNNEL WALL VERTICAL SUPPORT
TS 81 (F)	642+65	H3 OB (TNL)	OB	N/A	TC (F) 10	TUNNEL WALL VERTICAL SUPPORT
TS 81.1 (F)	642+65	H3 OB (TNL)	IB	N/A	TC (F) 10	TUNNEL WALL VERTICAL SUPPORT
TS 84 (F)	642+65	H3 OB (TNL)	IB	N/A	TC (F) 10	TUNNEL WALL VERTICAL SUPPORT
TS 89 (F)	652+65	H3 OB (TNL)	OB	N/A	TC (F) 12	TUNNEL WALL VERTICAL SUPPORT
TS 89.1 (F)	652+65	H3 OB (TNL)	IB	N/A	TC (F) 12	TUNNEL WALL VERTICAL SUPPORT
TS 92 (F)	652+65	H3 OB (TNL)	IB	N/A	TC (F) 12	TUNNEL WALL VERTICAL SUPPORT

TUNNEL WALL - FUTURE TRAFFIC SIGNAL INSTALLATION DETAIL
NTS

10/13/95	ADDENDUM 1
DATE	REVISION

STATE OF HAWAII
DEPARTMENT OF TRANSPORTATION
HIGHWAYS DIVISION

DETAILS
SYSTEMS EQUIPMENT - 1
HAIKU APPROACH
INTERSTATE ROUTE H-3
F.A.I. PROJ. NO. I-H3-1(75)

SCALE: 1" = 20'-0" DATE: OCT 1995

GLEN J. FROMM LICENSED PROFESSIONAL ENGINEER No. 8561-C HAWAII, U.S.A.

THIS WORK WAS PREPARED BY ME OR UNDER MY SUPERVISION

SHEET NO. 7T4L OF 4 SHEETS

ADD. 305 S-12

ORIGINAL PLAN
SURVEY PLOTTED BY QUADD DATE 10/04/95
TRACED BY " " 10/03/95
NOTEBOOK
DESIGNED BY W.ANDERSON
QUANTITIES BY " " 10/03/95
No.
CHECKED BY G.FROMM

H375DTL1 -h3\c4 -10-04-95

FED. ROAD DIST. NO.	STATE	FED. AID PROJ. NO.	FISCAL YEAR	SHEET NO.	TOTAL SHEETS
HAWAII	HAW.	I-H3-1(75) UNIT III	1994	305 S-13	353

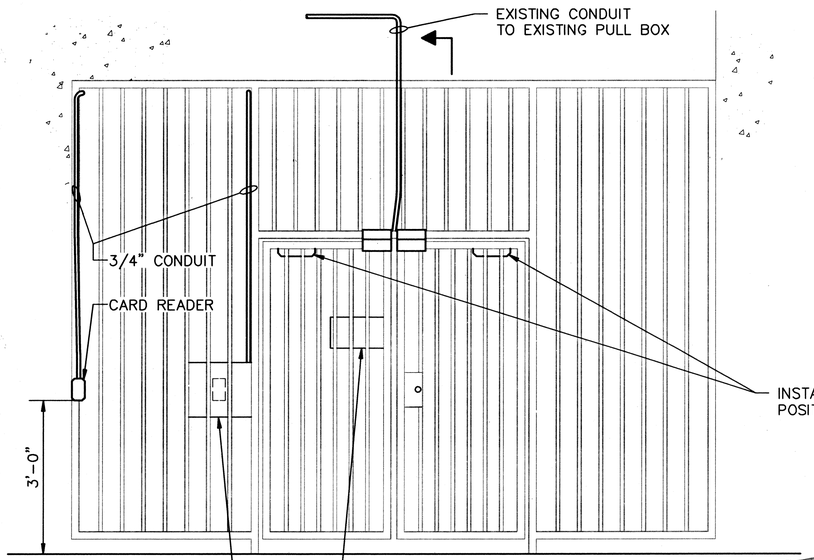

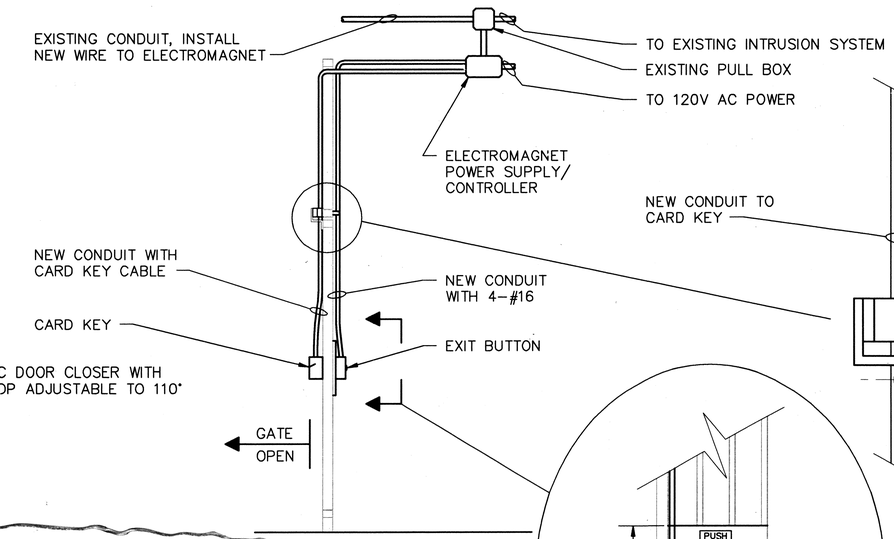

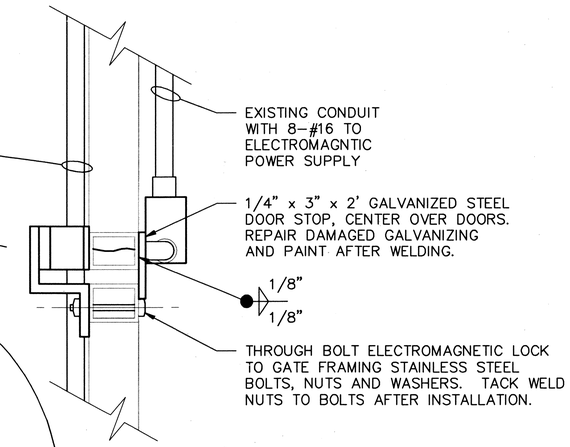

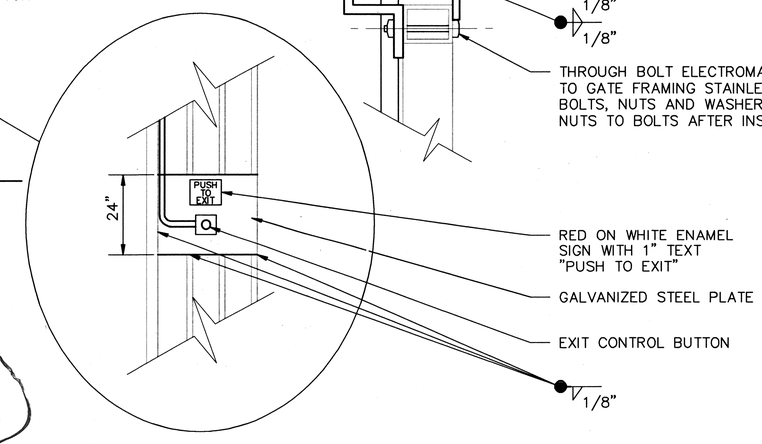

SECTION A
NTS

ELEVATION AT LOADING DOCK GRILLE 1

NTS LOOKING IN

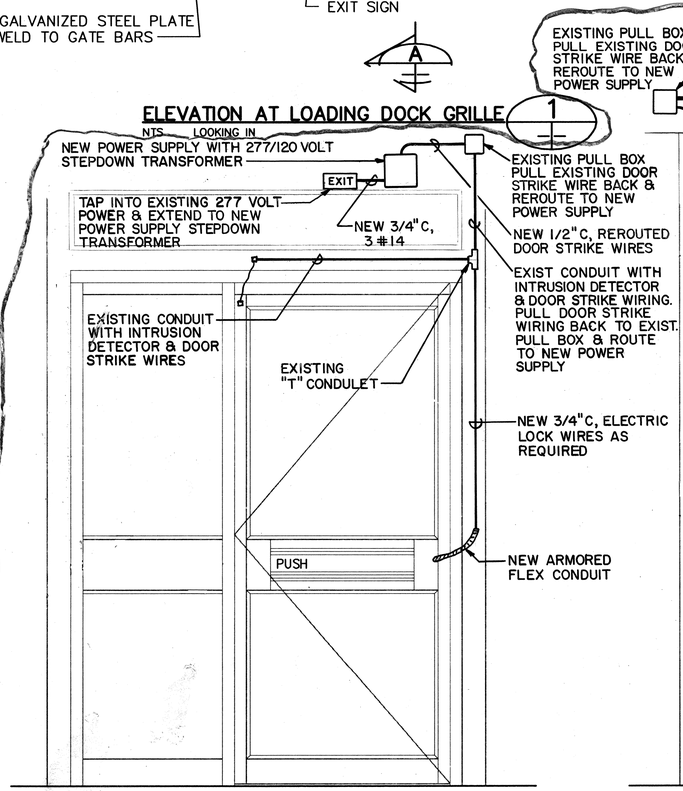

AT CK 215
LOOKING FROM GRID LINE "2" TOWARDS "1"

CONTROL BUILDING GARAGE 6 (7T4P | 7T4M)
SCALE: NONE

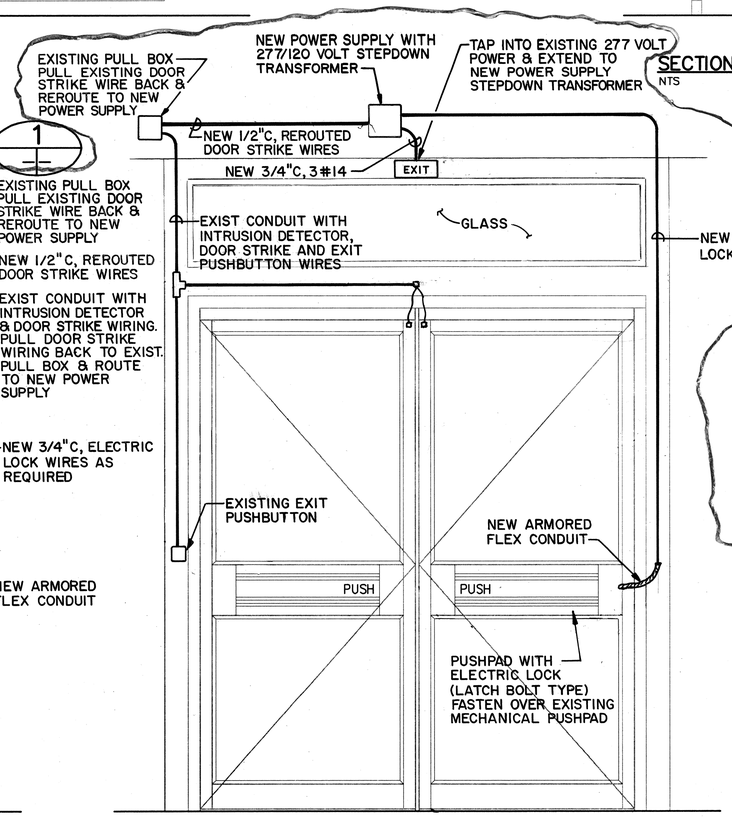

AT CK 210
LOOKING FROM GRID LINE "3" TOWARDS "2"

CONTROL BUILDING FRONT DOOR 5 (7T4P | 7T4M)
SCALE: NONE

STOREFRONT DOORS TO BE MOUNTED		
LOCATION	DOUBLE	SINGLE
CONTROL BUILDING LEVEL 1 (GARAGE)		X
CONTROL BUILDING LEVEL 1 (MAIN ENTRY)	X	
CONTROL BUILDING LEVEL 2 (GENERATOR RM.)		X
O & M MAIN ENTRY		X

DATE	REVISION
5/29/97	DCN 75-019: REV. CONTROL BLDG DOOR DETAILS, DELETED INSTALLATION NOTES
10/27/95	ADDENDUM 2 - ADDED PLAN

STATE OF HAWAII
DEPARTMENT OF TRANSPORTATION
HIGHWAYS DIVISION

DETAILS
SYSTEMS EQUIPMENT – 2

HAIKU APPROACH

INTERSTATE ROUTE H-3
F.A.I. PROJ. NO. I-H3-1(75)

SCALE: 1" = 20'-0" DATE: OCT 1995

SHEET NO. 7T4M OF 4 SHEETS

C.O. ADD. 305 S-13

LICENSED PROFESSIONAL ENGINEER No. 8561-C HAWAII, U.S.A.

THIS WORK WAS PREPARED BY ME OR UNDER MY SUPERVISION

ORIGINAL PLAN		DATE
	SURVEY PLOTTED BY	
	DRAWN BY CADD	10/04/95
	TRACED BY	
	DESIGNED BY W.ANDERSON	10/03/95
NOTEBOOK	QUANTITIES BY	
No.	CHECKED BY G.TROMM	10/03/95

FED. ROAD DIST. NO.	STATE	FED. AID PROJ. NO.	FISCAL YEAR	SHEET NO.	TOTAL SHEETS
HAWAII	HAW.	I-H3-1(75) UNIT III	1994	305 S-14	353

N

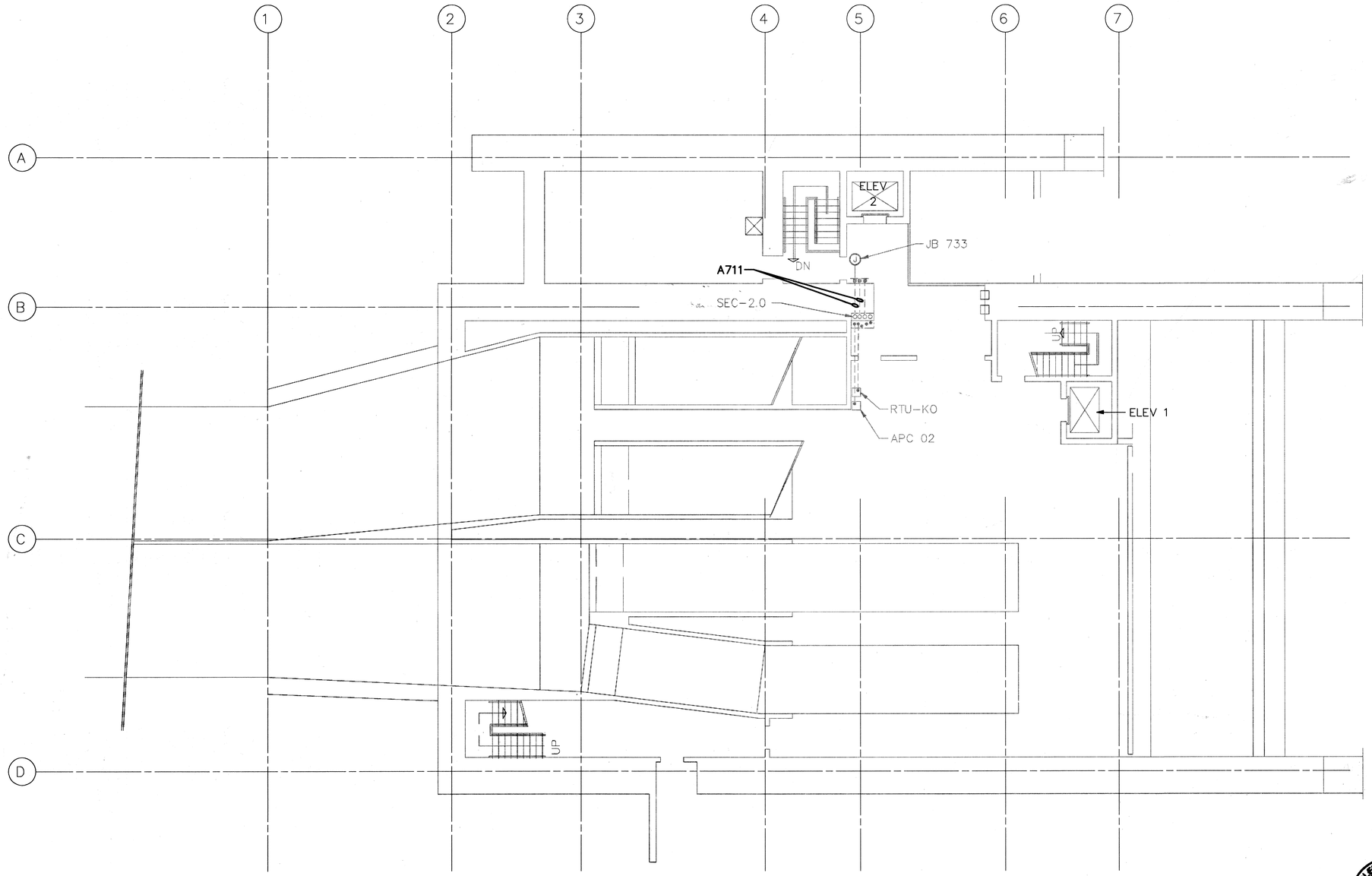

HAKIU PORTAL BUILDING
OUTBOUND PLAN

GRAPHIC SCALE:
8' 4' 0' 8' 16'
1/8" = 1'-0"

NOTE:
1. SEE 3T3 FOR CONDUIT / CABLE SCHEDULE

ORIGINAL PLAN		DATE
	SURVEY PLOTTED BY CADD	10/18/95
	DRAWN BY	
	TRACED BY W.ANDERSON	10/18/95
NOTEBOOK	DESIGNED BY	10/18/95
	QUANTITIES BY G.FROMM	10/18/95
No.	CHECKED BY	

GLEN J. FIESCHI
LICENSED PROFESSIONAL ENGINEER
No. 8561-C
HAWAII, U.S.A.

THIS WORK WAS PREPARED BY ME OR UNDER MY SUPERVISION

DATE	REVISION
10/27/95	ADDENDUM 2 - ADDED PLAN

STATE OF HAWAII
DEPARTMENT OF TRANSPORTATION
HIGHWAYS DIVISION

INTRUSION DETECTION CONDUITS LEVEL 2

COMMON WORK
H-3 FINISH (UNIT III)
FAIP NO. I-H3-1(75), UNIT III
T.K. TUNNEL / ACCESS ROADS

SCALE: 1/8" = 1'-0" DATE: OCT 1995

SHEET NO. 7T4N OF 4 SHEETS

H375T03 -h3\c4 -10-18-95

ADD. 305 S-14

FED. ROAD DIST. NO.	STATE	FED. AID PROJ. NO.	FISCAL YEAR	SHEET NO.	TOTAL SHEETS
HAWAII	HAW.	I-H3-1(75) UNIT III	1994	305 S-15	353

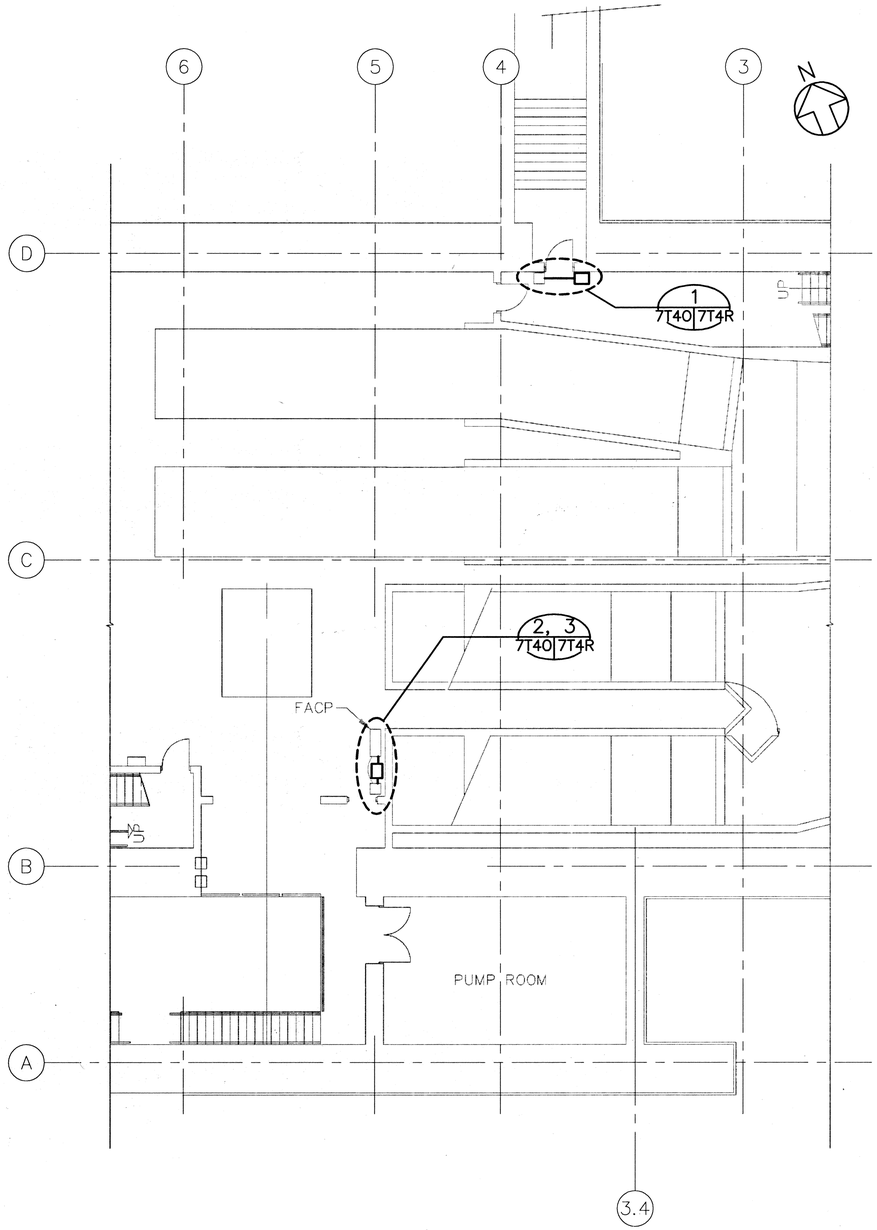

Halawa Inbound Portal Bldg – Level 2

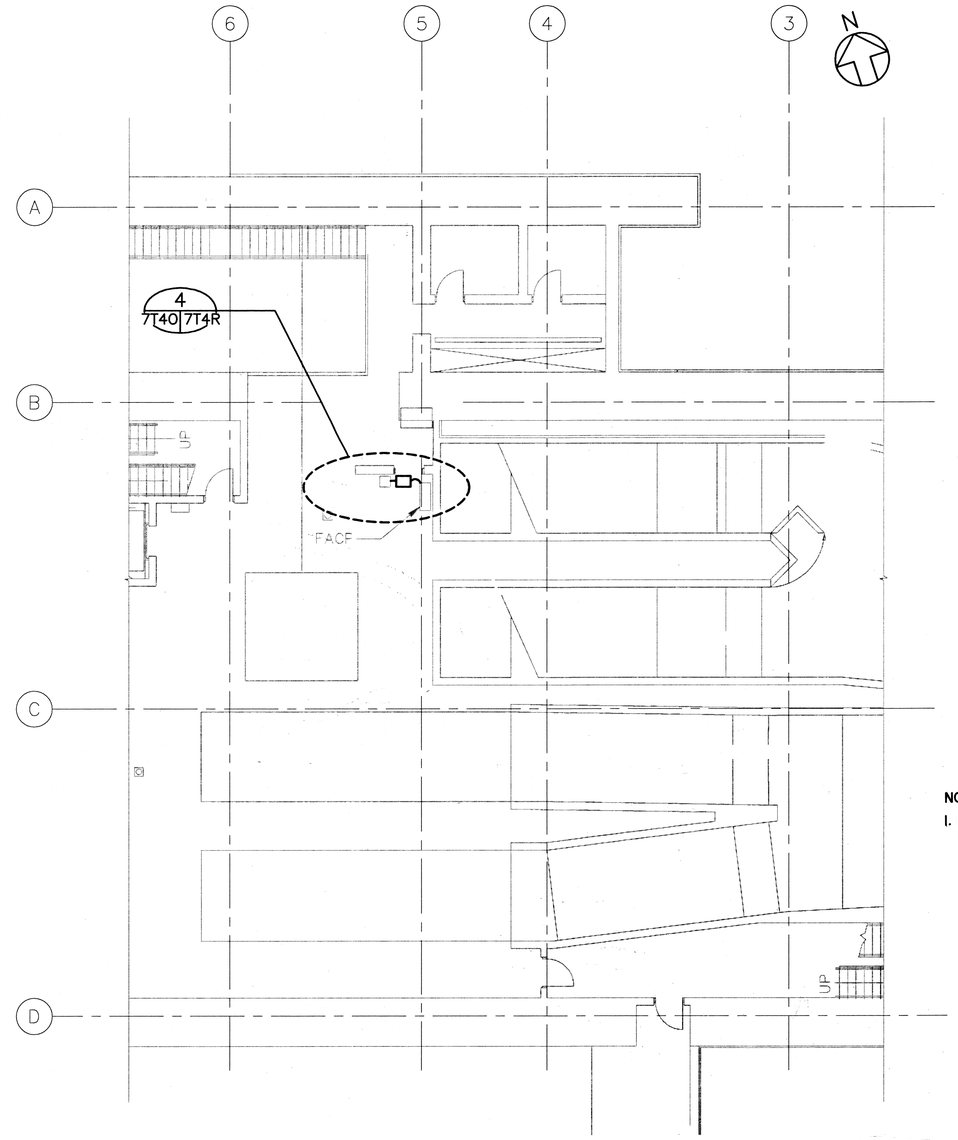

Halawa Outbound Portal Bldg – Level 2

NOTE:

1. EXISTING EQUIPMENT AND CONDUIT NOT SHOWN. SEE PLANS, FAIP NO. I-H3-1(65)

GRAPHIC SCALE:
8' 4' 0' 8' 16'
1/8" = 1'-0"

GLEN J. FROMM
LICENSED PROFESSIONAL ENGINEER
No. 8561-C
HAWAII, U.S.A.

THIS WORK WAS PREPARED BY ME OR UNDER MY SUPERVISION

DATE	REVISION
5/29/97	DCN 75-019: SHEET ADDED

STATE OF HAWAII
DEPARTMENT OF TRANSPORTATION
HIGHWAYS DIVISION

DETAILS
SYSTEMS EQUIPMENT – 3

COMMON WORK
H-3 FINISH (UNIT III)
FAIP NO. I-H3-1(75), UNIT III
T.K. TUNNEL/ACCESS ROADS

SCALE: 1/8" = 1'-0" DATE: MAY 1997

SHEET NO. 7T40 OF 4 SHEETS

C.O. 305 S-15

ORIGINAL PLAN
SURVEY PLOTTED BY
DRAWN BY
TRACED BY
DESIGNED BY
QUANTITIES BY
CHECKED BY
DATE
NOTE BOOK
No.

FED. ROAD DIST. NO.	STATE	FED. AID PROJ. NO.	FISCAL YEAR	SHEET NO.	TOTAL SHEETS
HAWAII	HAW.	I-H3-1(75) UNIT III	1994	305 S-16	353

N

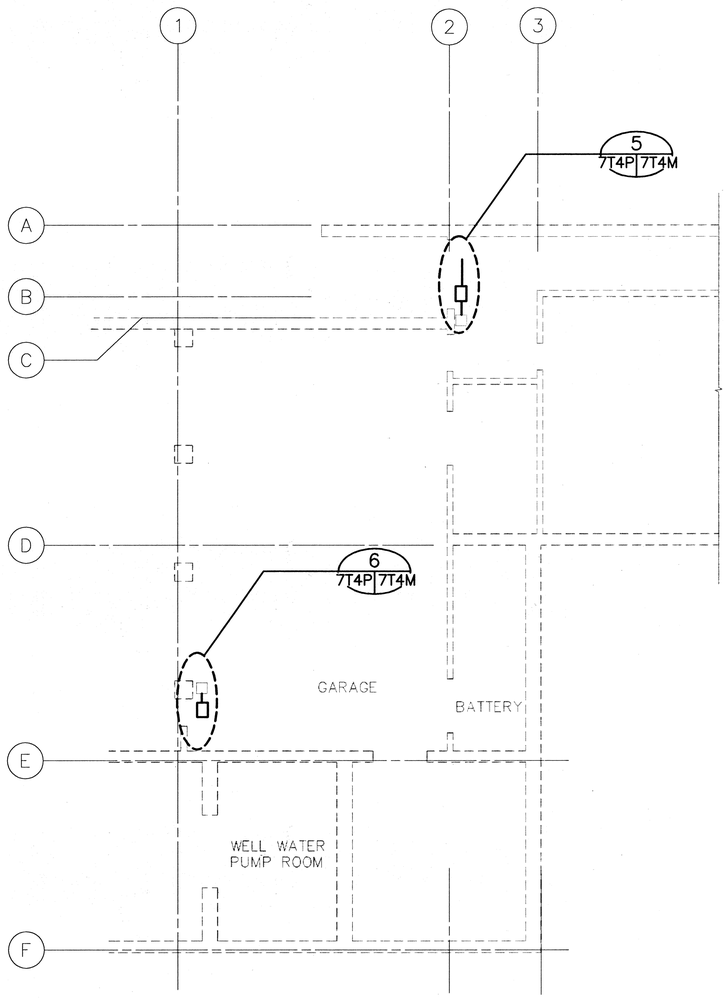

CONTROL BUILDING — LEVEL 1

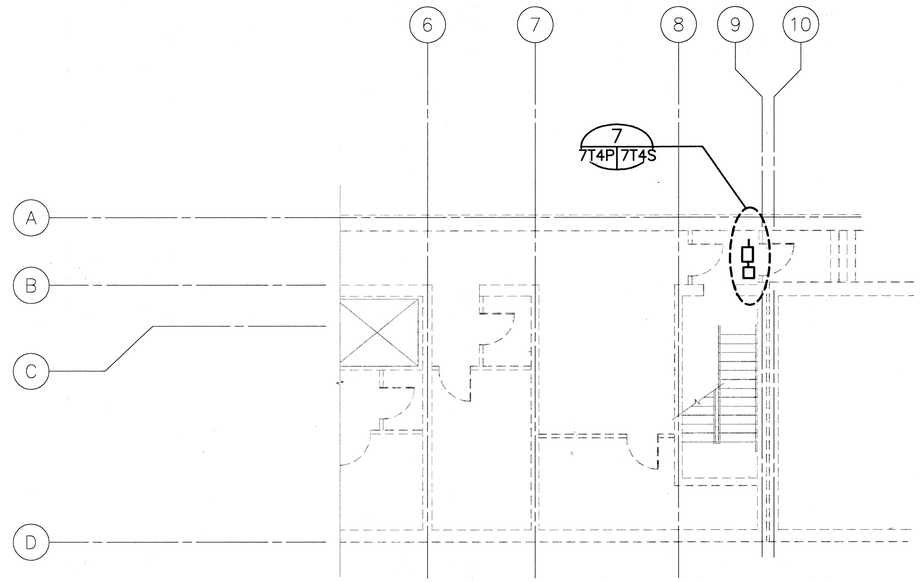

CONTROL BUILDING — LEVEL 2

NOTE:

1. EXISTING EQUIPMENT AND CONDUIT NOT SHOWN. SEE PLANS, FAIP NO. I-H3-1(65)

DATE	REVISION
5/29/97	DCN 75-019: SHEET ADDED

GRAPHIC SCALE:
8' 4' 0' 8' 16'
1/8" = 1'-0"

GLEN J. FROMM
LICENSED PROFESSIONAL ENGINEER
No. 8561-C
HAWAII, U.S.A.

THIS WORK WAS PREPARED BY ME OR UNDER MY SUPERVISION

STATE OF HAWAII
DEPARTMENT OF TRANSPORTATION
HIGHWAYS DIVISION

DETAILS
SYSTEMS EQUIPMENT — 4

COMMON WORK
H-3 FINISH (UNIT III)
FAIP NO. I-H3-1(75), UNIT III
T.K. TUNNEL/ACCESS ROADS

SCALE: 1/8"=1'-0" DATE: MAY 1997

SHEET NO. 7T4P OF 4 SHEETS

ORIGINAL PLAN
NOTE BOOK No.
SURVEY PLOTTED BY
DRAWN BY
TRACED BY
DESIGNED BY
QUANTITIES BY
CHECKED BY
DATE

C.O. 305 S-16

FED. ROAD DIST. NO.	STATE	FED. AID PROJ. NO.	FISCAL YEAR	SHEET NO.	TOTAL SHEETS
HAWAII	HAW.	I-H3-1(75) UNIT III	1994	305 S-17	353

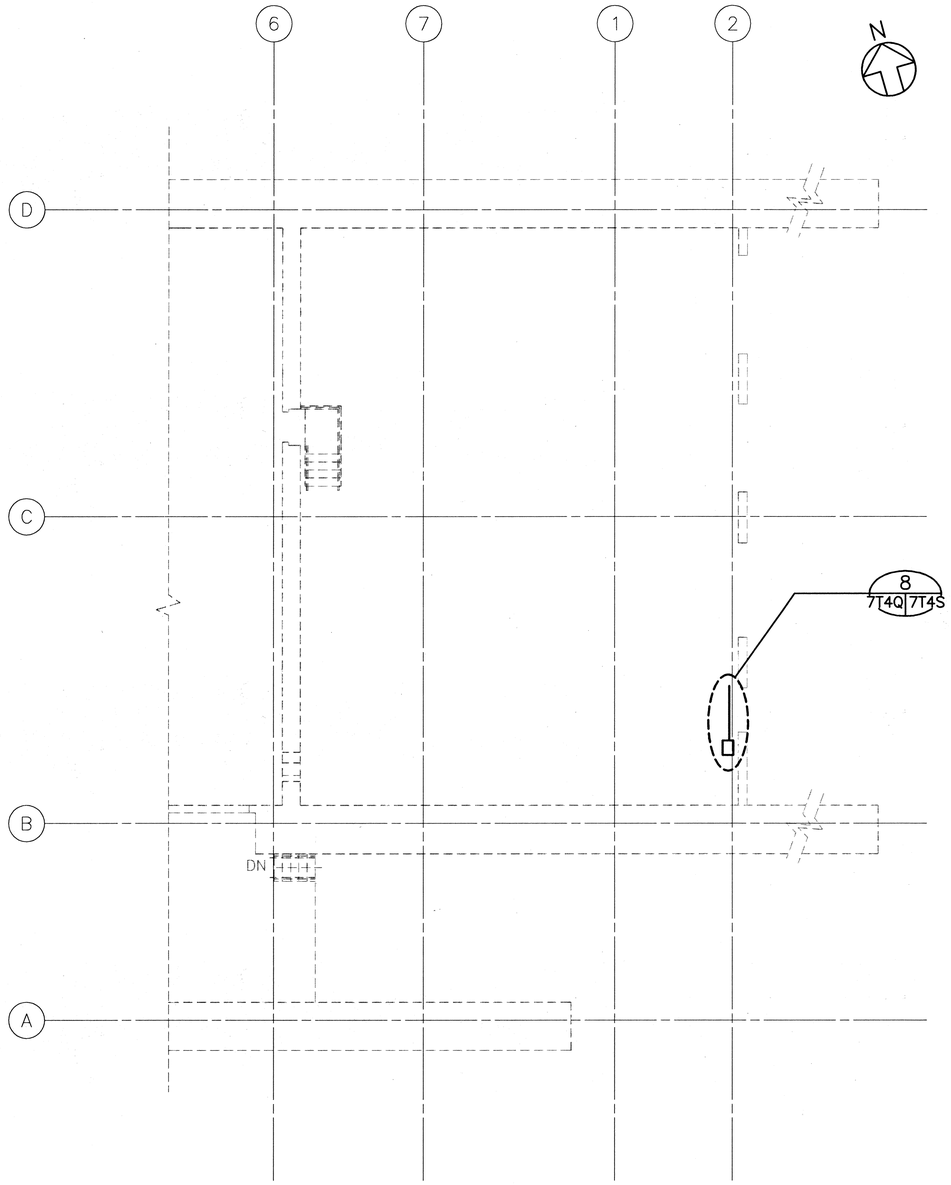

O & M GARAGE
HAIKU INBOUND PORTAL BUILDING

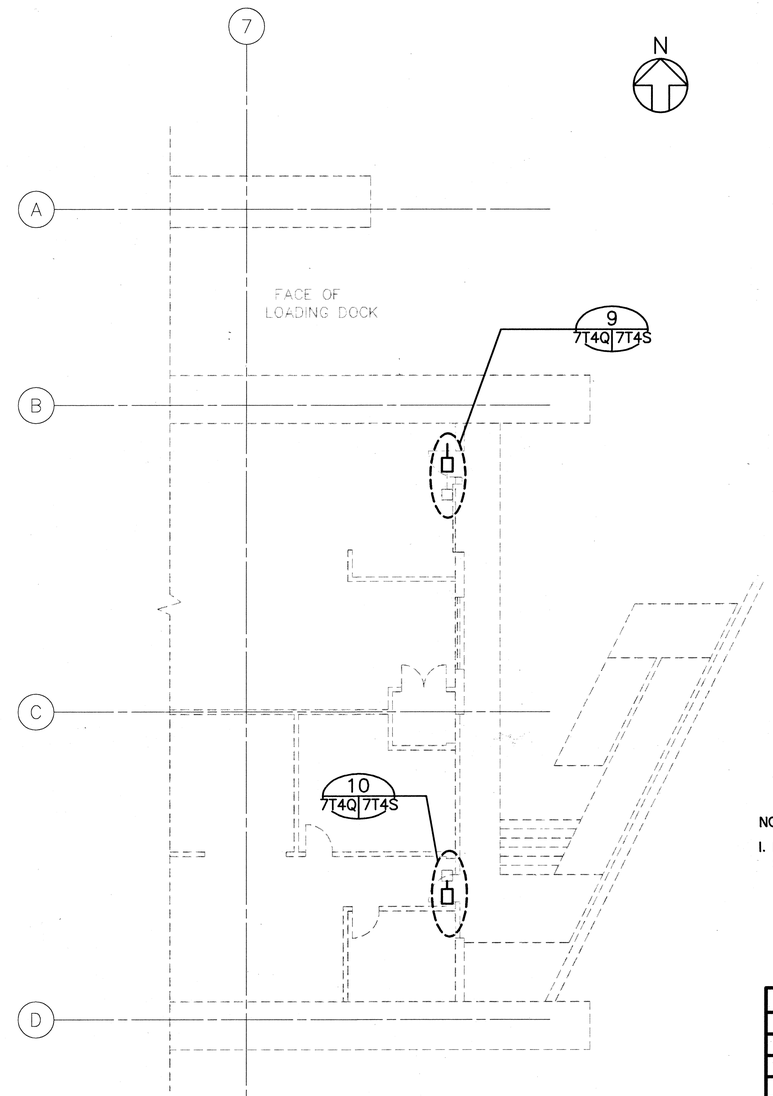

O & M OFFICE / SHOP
HAIKU OUTBOUND PORTAL BUILDING

NOTE:

1. EXISTING EQUIPMENT AND CONDUIT NOT SHOWN. SEE PLANS, FAIP NO. I-H3-1(65)

GRAPHIC SCALE:
8' 4' 0' 8' 16'
1/8" = 1'-0"

GLEN J. FROMM
LICENSED PROFESSIONAL ENGINEER
No. 8561-C
HAWAII, U.S.A.

THIS WORK WAS PREPARED BY ME OR UNDER MY SUPERVISION

DATE	REVISION
5/29/97	DCN 75-019: SHEET ADDED

STATE OF HAWAII
DEPARTMENT OF TRANSPORTATION
HIGHWAYS DIVISION

DETAILS
SYSTEMS EQUIPMENT – 5

COMMON WORK
H-3 FINISH (UNIT III)
FAIP NO. I-H3-1(75), UNIT III
T.K. TUNNEL/ACCESS ROADS

SCALE: 1/8" = 1'-0" DATE: MAY 1997

SHEET NO. 7T4Q OF 4 SHEETS

ORIGINAL PLAN
SURVEY PLOTTED BY
DRAWN BY
TRACED BY
DESIGNED BY
QUANTITIES BY
CHECKED BY
DATE
NOTE BOOK
No.

C.O. 305 S-17

FED. ROAD DIST. NO.	STATE	FED. AID PROJ. NO.	FISCAL YEAR	SHEET NO.	TOTAL SHEETS
HAWAII	HAW.	I-H3-1(75), UNIT III	1994	305 S-18	353

INSTALLATION NOTES:

1. EXISTING EXIT PUSHBUTTON
2. REMOVE AND REPLACE EXISTING DOOR LOCK WITH NEW ELECTRIC LOCK (LATCH BOLT TYPE)
3. INSTALL WIRE IN DOOR
4. ARMORED FLEX CONDUIT
5. NEW 1/2" CONDUIT WITH DOOR ELECTRIC LOCK WIRES AS REQUIRED
6. NEW POWER SUPPLY WITH 277/120 VOLT STEP-DOWN TRANSFORMER
7. TAP INTO EXISTING 277V POWER & EXTEND TO NEW POWER SUPPLY STEP-DOWN TRANSFORMER
8. NEW 3/4" CONDUIT WITH 3 #14 WIRES
9. NEW 1/2" CONDUIT WITH REROUTED WIRES
10. EXISTING PULLBOX. PULL EXISTING DOOR STRIKE WIRES BACK & REROUTE INTO NEW POWER SUPPLY
11. NEW 1/2" CONDUIT WITH REROUTED DOOR STRIKE WIRES & NEW WIRES FOR ELECTRIC LOCK
12. NEW POWER SUPPLY
13. EXISTING FACP. TAP INTO EXISTING 120 VOLT POWER & EXTEND TO NEW POWER SUPPLY
14. EXISTING CONDUIT
15. EXISTING CONDUIT WITH INTRUSION WIRES
16. EXISTING 3/4" CONDUIT WITH 120 VOLT POWER TO FACP
17. NEW 3/4" CONDUIT WITH 2 #14 WIRES
18. "T" CONDULET
19. EXISTING CONDUIT. INSTALL 2 #14 WIRES FOR POWER TO NEW POWER SUPPLY
20. PUSHBAR WITH ELECTRIC LOCK (LATCH BOLT TYPE) FASTEN OVER EXISTING MECHANICAL PUSH BAR. INSTALL SURFACE MOUNTED DOOR STRIKE.
21. EXISTING CONDUIT WITH INTRUSION DETECTION & DOOR STRIKE WIRING
22. NEW 6" X 6" X 4" PULLBOX
23. EXISTING 1 1/4" CONDUIT EXTEND TO NEW 6" X 6" X 4" PULLBOX
24. REPLACE EXISTING "LB" CONDULET WITH "T" CONDULET PULL EXISTING DOOR STRIKE WIRES TO NEW POWER SUPPLY
25. PULL EXISTING WIRING BACK TO NEAREST PULLBOX, CUT CONDUIT & INSTALL "T" CONDULET. ROUTE DOOR STRIKE WIRES INTO NEW POWER SUPPLY. REINSTALL INTRUSION WIRING TO EXISTING DETECTOR.
26. EXISTING PULLBOX

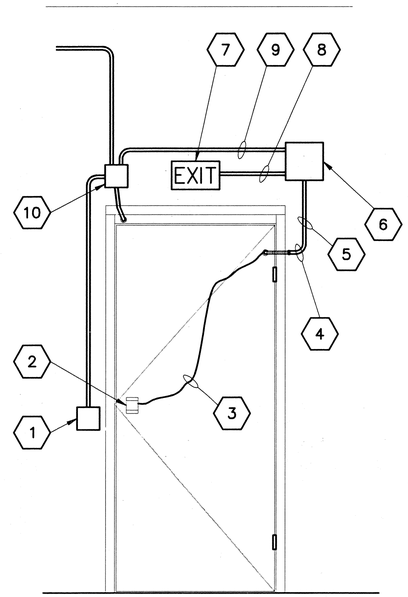

HALAWA IB PORTAL BLDG. – LEVEL 2 (1 / 7T4R | 7T4O)
NTS AT CK 333 LOCATION
LOOKING FROM GRID LINE "C" TOWARDS "D"

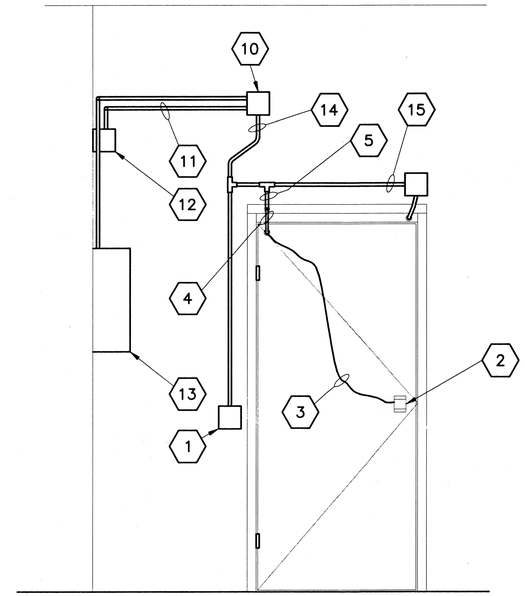

HALAWA IB PORTAL BLDG. – LEVEL 2 (2 / 7T4R | 7T4O)
NTS AT CK 330 LOCATION
LOOKING FROM GRID LINE "C" TOWARDS "B"

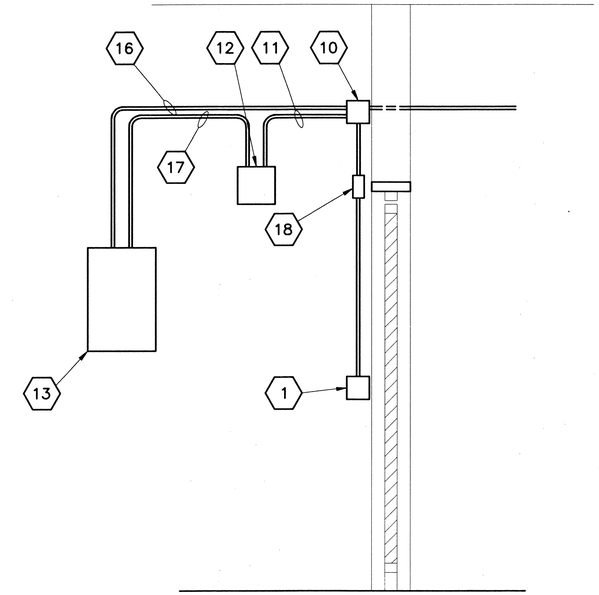

HALAWA IB PORTAL BLDG. – LEVEL 2 (3 / 7T4R | 7T4O)
NTS AT CK 330 LOCATION
LOOKING FROM GRID LINE "6" TOWARDS "5"

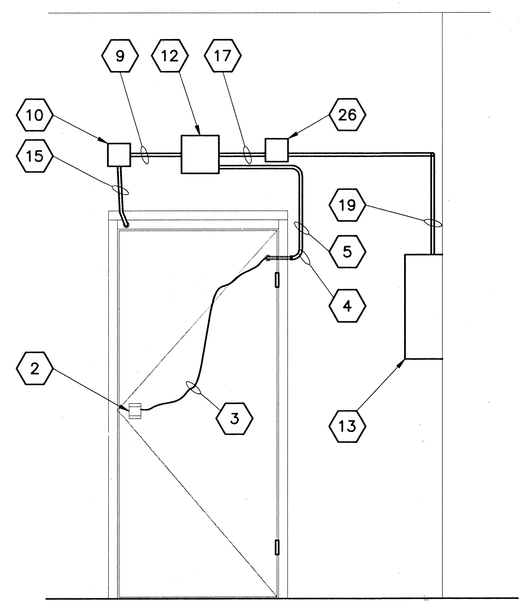

HALAWA OB PORTAL BLDG LEVEL 2 (4 / 7T4R | 7T4O)
NTS AT CK 430 LOCATION
LOOKING FROM GRID LINE "C" TOWARDS "B"

GLEN J. FROHM
LICENSED PROFESSIONAL ENGINEER
No. 8561-C
HAWAII, U.S.A.

THIS WORK WAS PREPARED BY ME OR UNDER MY SUPERVISION

DATE	REVISION
5/29/97	DCN 75-019: SHEET ADDED

STATE OF HAWAII
DEPARTMENT OF TRANSPORTATION
HIGHWAYS DIVISION

DETAILS
SYSTEMS EQUIPMENT – 6

COMMON WORK
H-3 FINISH (UNIT III)
FAIP NO. I-H3-1(75), UNIT III
T. K. TUNNEL/ACCESS ROADS

SCALE: NONE DATE: MAY 1997

SHEET NO. 7T4R OF 4 SHEETS

ORIGINAL PLAN | SURVEY PLOTTED BY | DRAWN BY | TRACED BY | DESIGNED BY | QUANTITIES BY | CHECKED BY | DATE
NOTE BOOK | No.

H375DOR2-J:\2410P1 -04-28-97

C.O. 305 S-18

FED. ROAD DIST. NO.	STATE	FED. AID PROJ. NO.	FISCAL YEAR	SHEET NO.	TOTAL SHEETS
HAWAII	HAW.	I-H3-1(75), UNIT III	1994	305 S-19	353

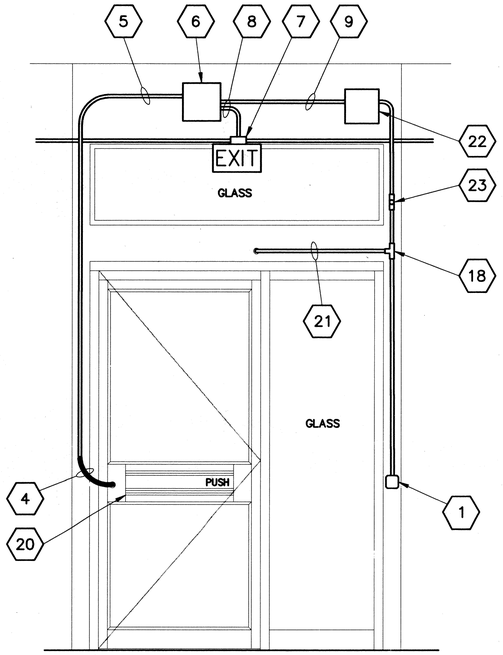

CONTROL BUILDING BACK DOOR — 7 (7T4S | 7T4P)

NTS AT CK 249
LOOKING FROM GRID LINE "8" TOWARDS "9"

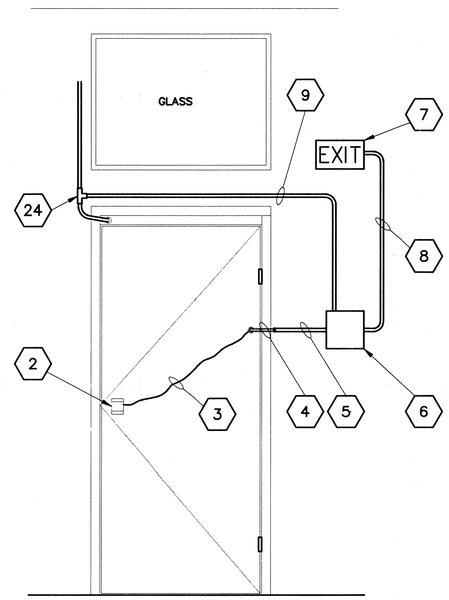

O & M GARAGE
HAIKU INBOUND PORTAL BUILDING — 8 (7T4S | 7T4Q)

NTS AT CK 13022 LOCATION
LOOKING FROM GRID LINE "2" TOWARDS "1"

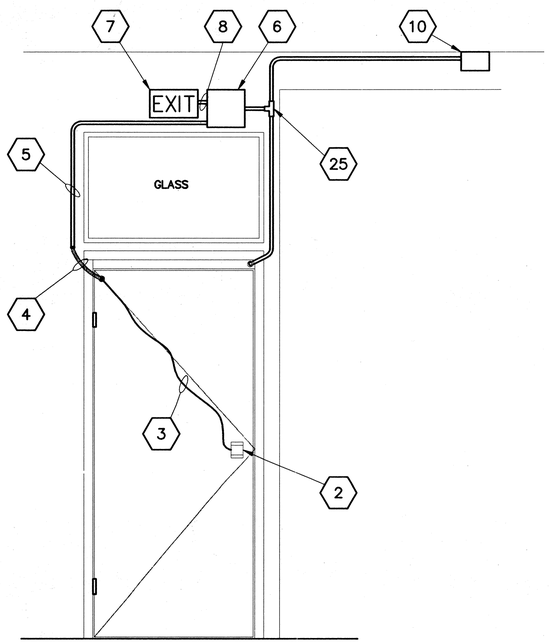

O & M SHOP
HAIKU OUTBOUND PORTAL BUILDING — 9 (7T4S | 7T4Q)

NTS AT CK 12028 LOCATION
LOOKING FROM GRID LINE "7" TOWARDS EAST

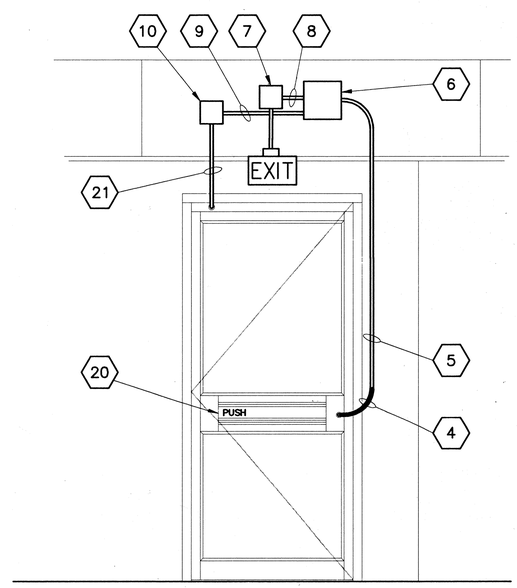

O & M OFFICE
HAIKU OUTBOUND PORTAL BUILDING — 10 (7T4S | 7T4Q)

NTS AT CK 12032
LOOKING FROM GRID LINE "7" TOWARDS EAST

NOTE:

FOR INSTALLATION NOTES SEE SHEET NO. 7T4R

DATE	REVISION
5/29/97	DCN75-019: SHEET ADDED

GLEN J. FROMM — LICENSED PROFESSIONAL ENGINEER No. 8561-C — HAWAII, U.S.A.

THIS WORK WAS PREPARED BY ME OR UNDER MY SUPERVISION

STATE OF HAWAII
DEPARTMENT OF TRANSPORTATION
HIGHWAYS DIVISION

DETAILS
SYSTEMS EQUIPMENT – 7

COMMON WORK
H-3 FINISH (UNIT III)
FAIP NO. I-H3-1(75), UNIT III
T.K. TUNNEL/ACCESS ROADS

SCALE: NONE DATE: MAY 1997

SHEET NO. 7T4S OF 4 SHEETS

ORIGINAL PLAN — NOTE BOOK No. — SURVEY PLOTTED BY — DRAWN BY — TRACED BY — DESIGNED BY — QUANTITIES BY — CHECKED BY — DATE

H3T5DOR3-J:\2410P1 -04-28-97

C.O. 305 S-19