| FED. ROAD DIST. NO. | STATE | FED. AID PROJ. NO. | FISCAL YEAR | SHEET NO. | TOTAL SHEETS |
|---|---|---|---|---|---|
| HAWAII | HAW. | I-H3-1(36) | 1988 | 14 | 25 |

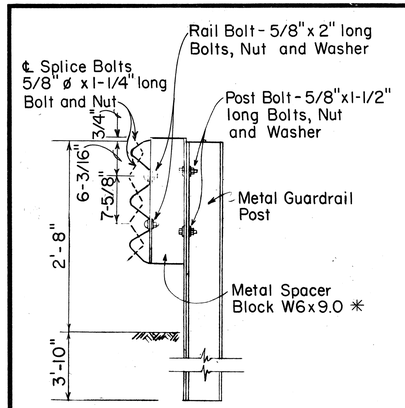


SINGLE METAL GUARDRAIL ON METAL POST W/METAL SPACER BLK.

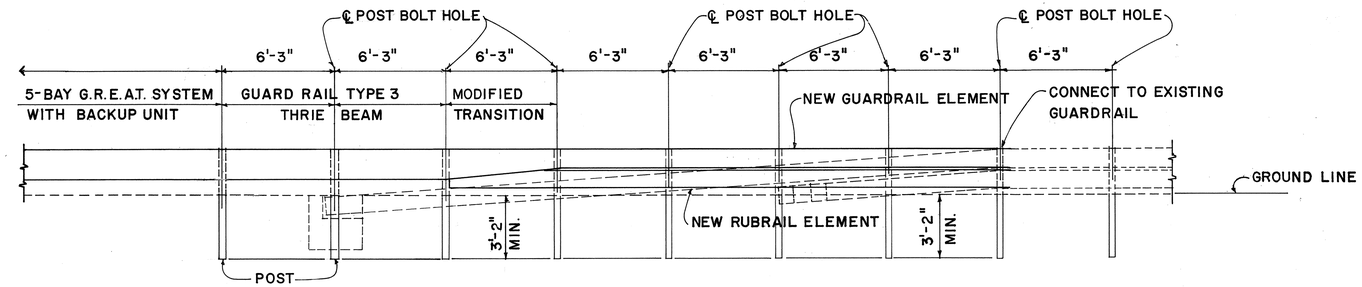


ELEVATION

GUARDRAIL ENERGY ABSORBING TERMINAL IMPACT ATTENUATOR CONNECTION

Scale: 1/4" = 1'-0"

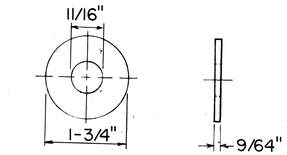


STEEL WASHER FOR 5/8" BOLT

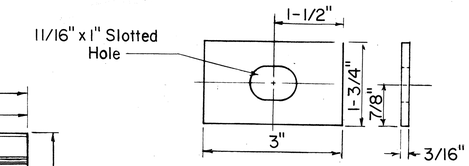


RECTANGULAR PLATE WASHER

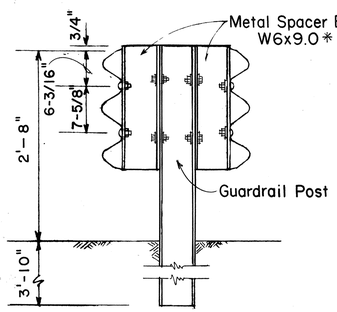


DOUBLE METAL GUARDRAIL ON METAL POST WITH METAL SPACER BLOCK

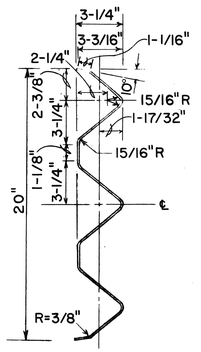


SECTION THRU RAIL ELEMENT

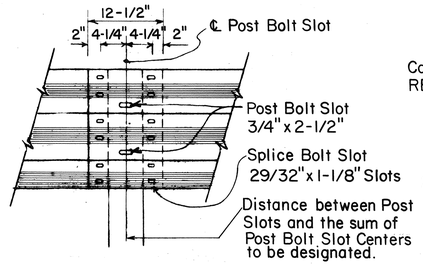


RAIL SPLICE

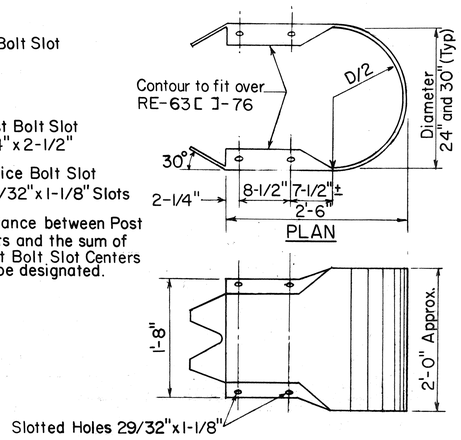


ELEVATION

END SECTION (BUFFER)

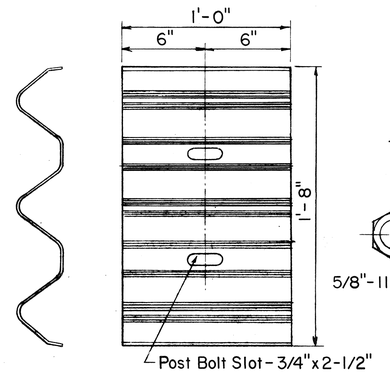


BACKUP PLATE (Use at Posts where Splices do not occur)

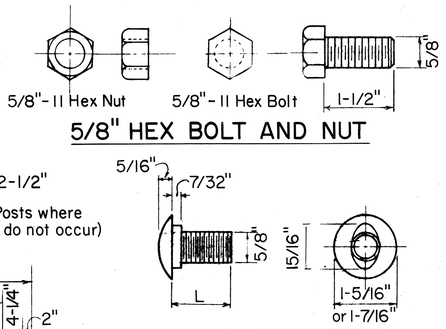


5/8" HEX BOLT AND NUT




| L | Thread Length |
|---|---|
| 1-1/4" | Full Thread |
| 2" | 1-1/2" Min. Thread Length |

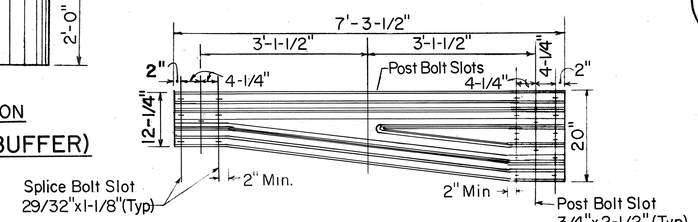


MODIFIED TRANSITION SECTION

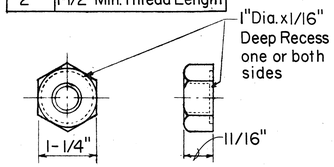


5/8" BUTTON HEAD BOLTS AND RECESS NUT

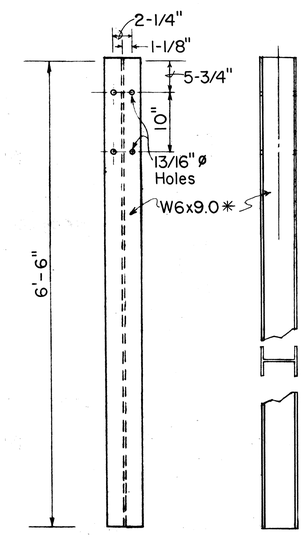


POST DETAILS

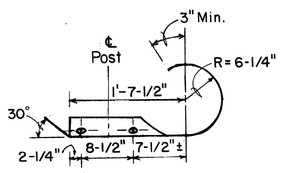


PLAN

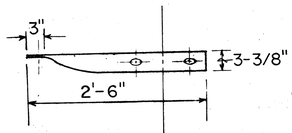


PLAN

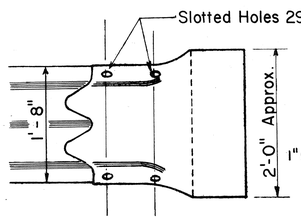


ELEVATION

SECTION (ROUNDED)

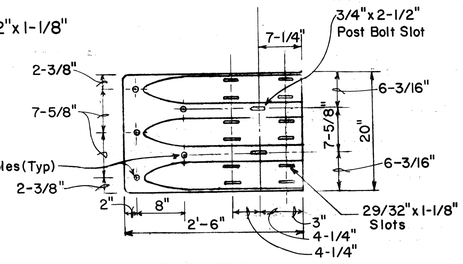


ELEVATION

TERMINAL CONNECTOR

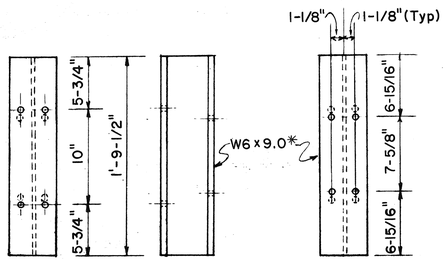


SPACER BLOCK

* Replaced W6x8.5, which is acceptable as an alternate.

MINORU HIROZAWA REGISTERED PROFESSIONAL ENGINEER No. 657-C HAWAII, U.S.A.

THIS WORK WAS PREPARED BY ME OR UNDER MY SUPERVISION.

Signature

| DATE | REVISION | APP'D. |
|---|---|---|
| | | |

STATE OF HAWAII
DEPARTMENT OF TRANSPORTATION
HIGHWAYS DIVISION

TYPICAL DETAIL
GUARD RAIL TYPE 3
THRIE BEAM

INTERSTATE ROUTE H-3
HAIKU ACCESS ROAD
F.A.I. PROJECT NO. I-H3-1(36)

SCALE: AS NOTED DATE: MAY 1988

SHEET No. | OF | SHEETS

ORIGINAL PLAN | SURVEY PLOTTED BY | DRAWN BY | TRACED BY | DESIGNED BY | QUANTITIES BY | CHECKED BY | DATE | NOTE BOOK | No.