FED. ROAD DIST. NO.	STATE	FED. AID PROJ. NO.	FISCAL YEAR	SHEET NO.	TOTAL SHEETS
HAWAII	HAW.	I-H3-1(9)6	1975	14	17

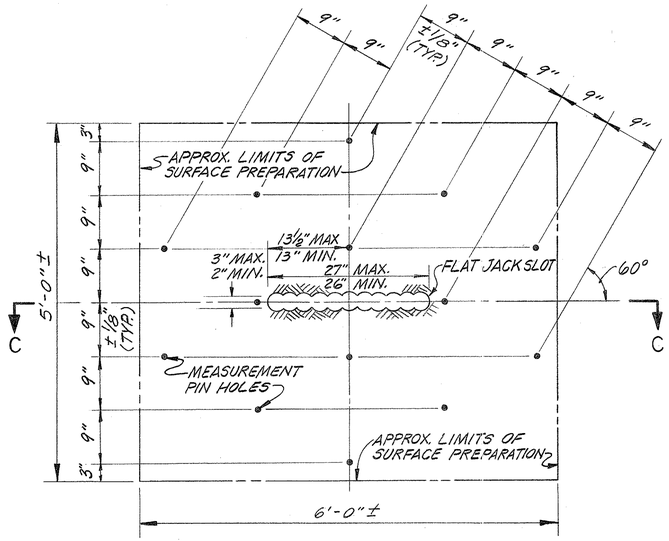

TYPICAL FLAT JACK SLOT
ELEVATION
SCALE: 1" = 1'-0"

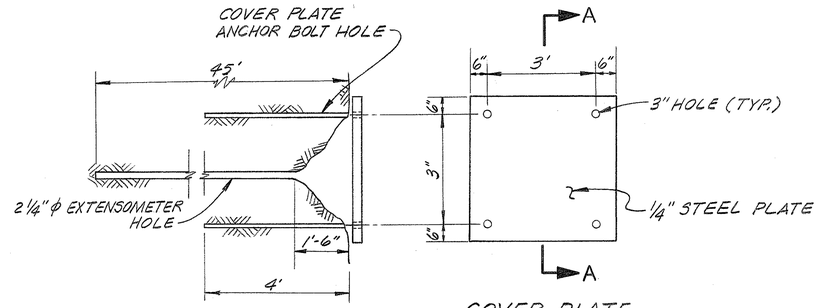

SECTION A-A

COVER PLATE

EXTENSOMETER DETAILS
SCALE: ½" = 1'-0"

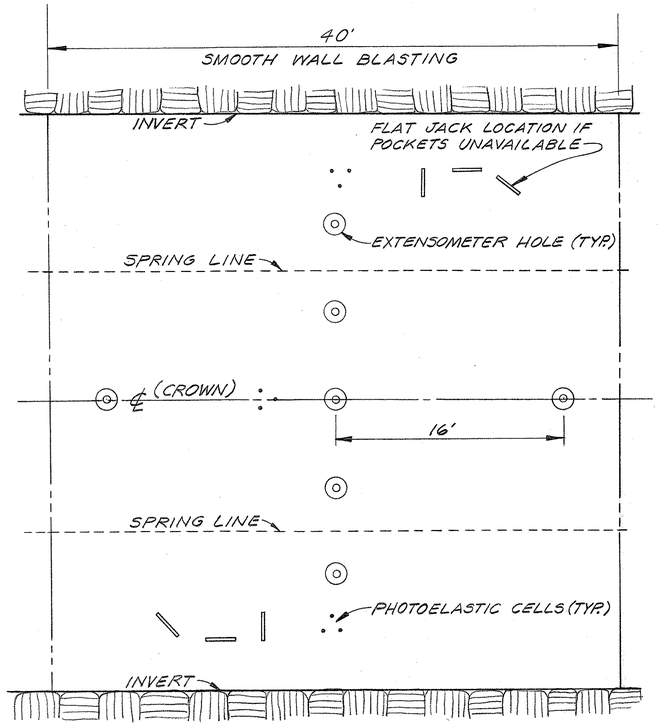

TEST AREA
DEVELOPED ROOF & WALL PLAN
SCALE: 1" = 5'

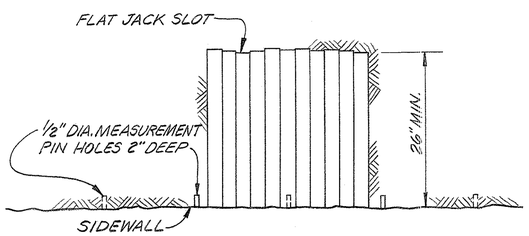

SECTION C-C
SCALE: 1" = 1'-0"

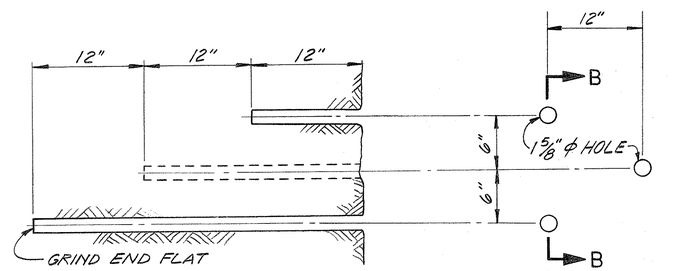

SECTION B-B

HOLE LOCATION

PHOTOELASTIC CELL DETAILS
SCALE: 1½" = 1'-0"

NOTES:

1. INSTRUMENT LOCATIONS ARE APPROXIMATE. EXACT LOCATIONS TO BE DETERMINED IN THE FIELD BY THE ENGINEER.
2. TENSIONING OF ROCK BOLTS IN THE AREAS SHOWN ON THIS DRAWING SHALL BE AS DIRECTED BY THE ENGINEER.

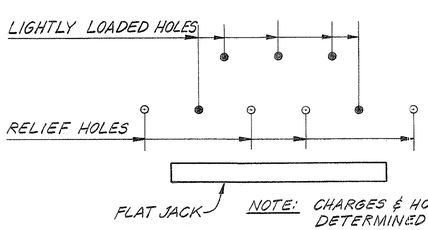

NOTE: CHARGES & HOLE DEPTH TO BE DETERMINED IN THE FIELD.

FLAT JACK REMOVAL ARRANGEMENT
SCALE: 1½" = 1'-0"

ORIGINAL PLAN		
	SURVEY PLOTTED BY	DATE
	DRAWN BY	" "
	TRACED BY	" "
NOTE BOOK	DESIGNED BY	" "
	QUANTITIES BY	" "
No.	CHECKED BY	" "

ELWYN H. KING
REGISTERED PROFESSIONAL ENGINEER
No. 2494
HAWAII, U.S.A.

THIS WORK WAS PREPARED BY ME OR UNDER MY SUPERVISION.

Elwyn H. King

STATE OF HAWAII
DEPARTMENT OF TRANSPORTATION
HIGHWAYS DIVISION

INSTRUMENTATION DETAILS

TRANS KOOLAU PILOT TUNNEL

PROJECT № I-H3-1(9)6

SCALE: AS NOTED DATE: MAY 9, 1975

SHEET No. OF SHEETS