FED. ROAD DIST. NO.	STATE	FED. AID PROJ. NO.	FISCAL YEAR	SHEET NO.	TOTAL SHEETS
HAWAII	HAW.	I-H3-1(35)	1988	2	24

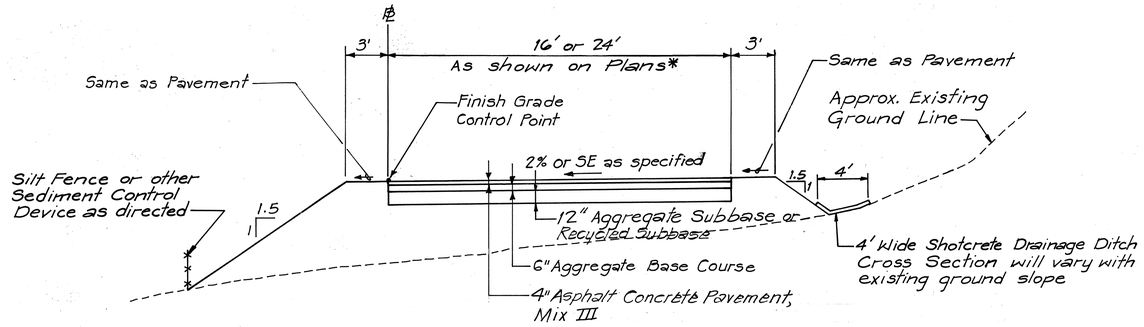

TYPICAL SECTION II

Fill Area
Scale: 1" = 5'

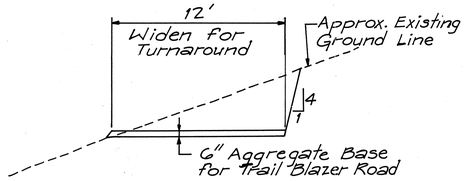

TYPICAL SECTION

Trail Blazer Road
Scale: 1"=5'

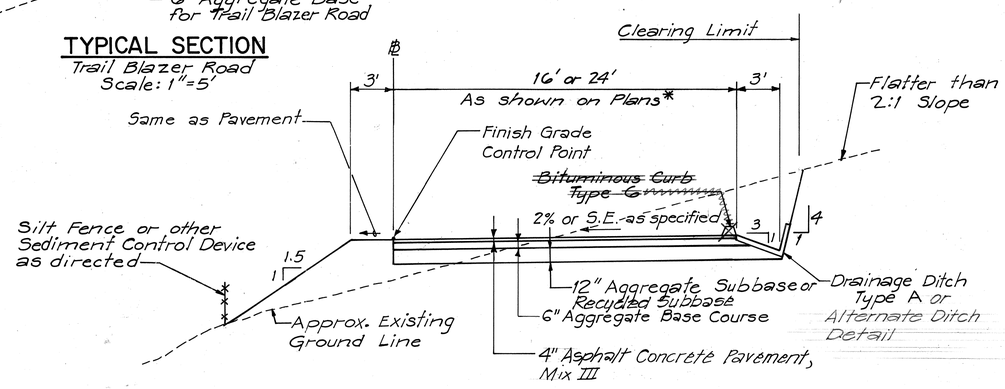

TYPICAL SECTION I

For Existing Slope Flatter than 2:1
Scale: 1" = 5'

NOTE: Regarding the Aggregate Subbase or Recycled Subbase see Note 4 on Sht. No. 3

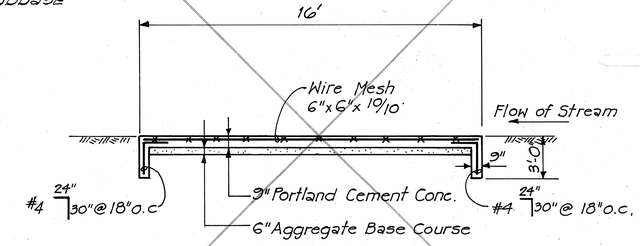

TYPICAL SECTION

Stream Fording Sta. 287+70 to Sta. 288+70
N.T.S.

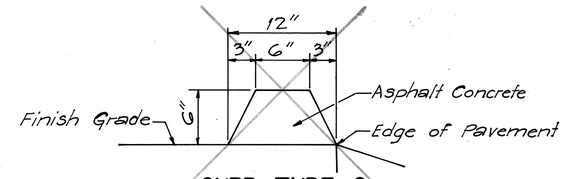

CURB TYPE 6
BITUMINOUS CURB

Scale 1½" = 1'-0"

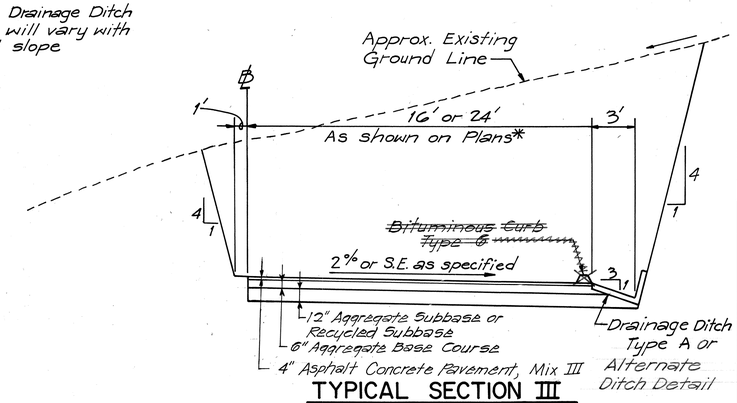

TYPICAL SECTION III

Cut Area
Scale: 1"=5'

TABLE OF ESTIMATED LIMITS OF ROADWAY SECTION TYPE			
I	II	III	
	122+70 - 129+30		294+00 - 296+00
131+30 - 145+50	130+60 - 131+30	146+80 - 162+00	316+00 - 318+00
175+00 - 181+00	162+00 - 162+70	165+00 - 175+00	322+50 - 324+70
201+00 - 202+00	164+10 - 165+00	181+00 - 190+50	325+70 - 330+00
212+00 - 215+00	190+50 - 191+60	192+70 - 201+00	355+00 - 356+90
244+00 - 249+00	207+50 - 212+00	202+00 - 207+50	357+90 - 359+00
277+00 - 287+70	224+00 - 226+80	215+00 - 218+00	364+00 - ~~367+00~~
288+70 - 290+00	228+50 - 232+50	219+00 - 224+00	~~381+00 - 383+00~~
304+00 - 309+00		227+30 - 228+50	~~385+00 - 386+10~~
367+00 373+00		232+50 - 244+00	~~386+70 - 390+00~~
		255+00 - 257+30	
		259+00 - 263+30	
		266+00 - 269+00	
		273+00 - 277+00	

370+32.5

TABLE OF ESTIMATED LIMITS OF RETAINING WALLS		
ESTIMATED AVERAGE WALL HEIGHT		
3' TO 10'	>10' TO 15'	>15' TO 20'
249+00 - 250+00	250+00 - 253+00	253+00 - 255+00
257+30 - 259+00	263+30 - 266+00	309+00 - 314+00
290+00 - 294+00	269+00 - 273+00	318+00 - 322+50
296+00 - 298+80	301+00 - 304+00	330+00 - 340+50
299+60 - 301+00	340+80 - 347+00	
314+00 - 316+00	352+00 - 355+00	
347+00 - 352+00	359+00 - 364+00	
377+50 - 381+00	373+00 - 377+50	
390+80 - 391+90	383+00 - 385+00	

* For Pullout Details see Sheet No. 4

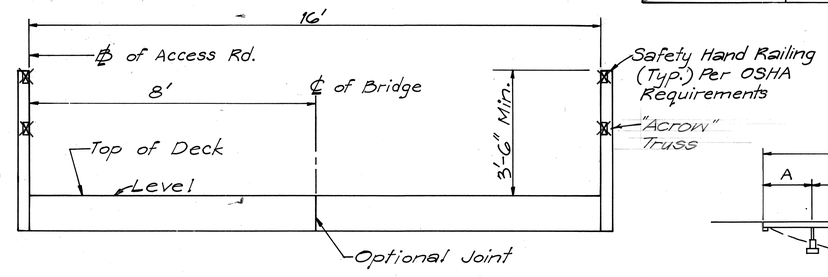

TYPICAL SECTION FOR STREAM CROSSING BRIDGE

Scale: ½" = 1'-0"

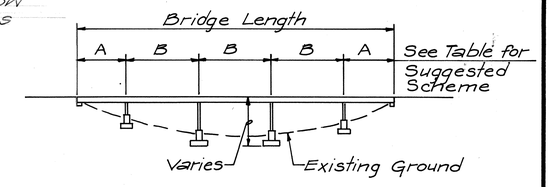

TYPICAL BRIDGE ELEVATION

N.T.S.

NOTE: Estimated total bridge length and quatities shown in Proposal are based on module lengths shown in Table, and assumed average pier height of 15 ft.

SUGGESTED SCHEME			
Final			
Bridge No.	~~Estimated~~ Bridge Length (Max. Span)	No. of Modules: Module 'A' (~~20'~~ Span)	Module 'B' (~~30'~~ Span)
G5' 1A	~~130'~~ 62.5'	~~2~~	G5' ~~3~~ 1
G5' 1	~~130'~~	~~2~~	~~3~~ 1
G5' 2	~~140'~~	~~4~~	~~4~~ 1
105' 3	~~110'~~	~~4~~ 2	~~3~~
G5' 4	~~100'~~	~~2~~	~~2~~ 1
G5' 5	~~50'~~	~~4~~	1
G5' 6	~~80'~~	~~4~~	~~2~~ 1
G5' 7	~~100'~~	2	~~2~~ 1
G5' 8	~~30'~~	—	1
G5' 9	~~100'~~	~~2~~	~~2~~ 1
G5' 10	~~60'~~	—	~~2~~ 1
G5' 11	~~80'~~	1	~~2~~ 1

The hatched area denotes limits of structure excavation.

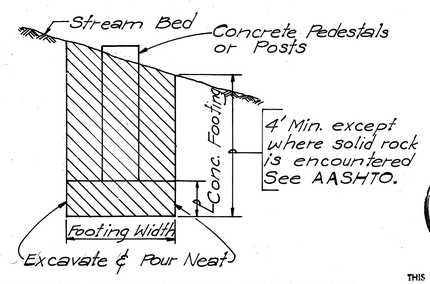

STRUCTURE EXCAVATION PAY LIMIT

N.T.S.

ANTHONY R. D'ALESSIO
REGISTERED PROFESSIONAL ENGINEER
No. 2934
HAWAII, U.S.A.

THIS WORK WAS PREPARED BY ME OR UNDER MY SUPERVISION.

STATE OF HAWAII
DEPARTMENT OF TRANSPORTATION
HIGHWAYS DIVISION

INTERSTATE ROUTE H-3

NORTH HALAWA CONSTRUCTION ACCESS ROAD

TYPICAL SECTIONS & DETAILS

SCALE: AS SHOWN — DATE: JULY 1987

SHEET No. 1 OF 1 SHEETS

ORIGINAL PLAN		DATE
	SURVEY PLOTTED BY	
	DRAWN BY	
	TRACED BY	
NOTE BOOK	DESIGNED BY	
	QUANTITIES BY	
No.	CHECKED BY	

DATE	REVISION