FED. ROAD DIS. NO.	STATE	FED. AID PROJ. NO.	FISCAL YEAR	SHEET NO.	TOTAL SHEETS
HAWAII	HAW.	I-H3-1(59)	1993	ADD.31	211

GRADING NOTES

1. ALL GRADING WORK SHALL BE DONE IN ACCORDANCE WITH CHAPTER 23, GRADING, SOIL EROSION AND SEDIMENT CONTROL, OF THE REVISED ORDINANCES OF HONOLULU, 1978, AS AMENDED (ORDINANCE NOS. 81-13 AND 90-71), AND SOIL REPORT BY GEOLABS-HAWAII DATED JANUARY, 1990.
2. THE CONTRACTOR SHALL REMOVE ALL SILT AND DEBRIS RESULTING FROM HIS WORK AND DEPOSITED IN DRAINAGE FACILITIES, ROADWAYS AND OTHER AREAS. THE COSTS INCURRED FOR ANY NECESSARY REMEDIAL ACTION BY THE CHIEF ENGINEER SHALL BE PAYABLE BY THE CONTRACTOR.
3. THE CONTRACTOR, AT HIS OWN EXPENSE, SHALL KEEP THE PROJECT AREA AND SURROUNDING AREA FREE FROM DUST AND OTHER NUISANCE. THE WORK SHALL BE IN CONFORMANCE WITH THE AIR POLLUTION STANDARDS AND REGULATIONS OF THE STATE DEPARTMENT OF HEALTH.
4. ALL SLOPES AND EXPOSED AREAS SHALL BE PROTECTED WITH EROSION CONTROL MATTING. ALL SLOPES AND EXPOSED AREAS WITH SOIL OR NONROCKY/HARD SURFACES SHALL BE HYDRO-MULCH SEEDED. THE WORK SHALL BE PERFORMED AS SOON AS FINAL GRADES HAVE BEEN ESTABLISHED IN ACCORDANCE WITH THE SPECIFICATION AND THE GRADING PLAN. THE WORK SHALL NOT BE DELAYED UNTIL ALL GRADING WORK HAS BEEN COMPLETED. GRADING TO FINAL GRADE SHALL BE CONTINUOUS AND ANY AREA WITHIN WHICH WORK HAS BEEN INTERRUPTED OR DELAYED SHALL BE MATTED AND/OR PLANTED. THE ENGINEER SHALL HAVE THE FINAL DECISION AS TO THE AREAS TO BE PROTECTED WITH EROSION CONTROL MATTING AND GRASSED.
5. FILLS ON SLOPES STEEPER THAN 5:1 SHALL BE KEYED.
6. NO GRADING WORK SHALL BE DONE ON SATURDAYS, SUNDAYS AND HOLIDAYS AT ANY TIME WITHOUT PRIOR WRITTEN NOTICE TO THE CHIEF ENGINEER OR DISTRICT ENGINEER, STATE OF HAWAII.
7. THE LIMITS OF THE AREA TO BE GRADED SHALL BE FLAGGED BY THE CONTRACTOR BEFORE THE COMMENCEMENT OF THE GRADING WORK.
8. THE CITY SHALL BE INFORMED OF THE LOCATION OF THE BORROW/DISPOSAL SITE FOR THE PROJECT WHEN THE APPLICATION FOR A GRADING PERMIT IS MADE. THE BORROW/DISPOSAL SITE MUST ALSO FULFILL THE REQUIREMENTS OF THE GRADING ORDINANCE.
9. ALL GRADING OPERATIONS SHALL BE PERFORMED IN CONFORMANCE WITH THE APPLICABLE PROVISIONS OF CHAPTER 54, WATER QUALITY STANDARDS, AND CHAPTER 55, WATER POLLUTION CONTROL, OF TITLE 11, ADMINISTRATIVE RULES OF THE STATE DEPARTMENT OF HEALTH.
10. TEMPORARY EROSION CONTROL PLAN AND PROCEDURES SHALL BE SUBMITTED BY THE CONTRACTOR FOR APPROVAL PRIOR TO THE START OF ACTUAL GRADING OPERATIONS.
11. EXCAVATED MATERIAL ON SITE WHICH WILL BE EXPOSED FOR MORE THAN 7 DAYS SHALL BE COVERED WITH PLASTIC SHEETS WITHIN 2 DAYS OF PLACEMENT OR AS DIRECTED BY THE ENGINEER.
12. SILT FENCE SHALL BE INSTALLED ALONG THE EDGES OF OPEN CHANNELS & DITCHES IN ORDER TO FILTER SEDIMENT FROM RUNOFF, BEFORE WATERS ENTER THE CHANNEL.
13. TEMPORARY EROSION CONTROLS SHALL NOT BE REMOVED BEFORE PERMANENT EROSION CONTROLS ARE IN-PLACE AND ESTABLISHED.
14. TEMPORARY EROSION AND POLLUTION CONTROL MEASURES, INCLUDING SILT FENCE, WLL BE PERFORMED ON A FORCE ACCOUNT BASIS AND PAID FOR UNDER ITEM NO. 639.0100, TEMPORARY PROJECT WATER POLLUTION CONTROL.

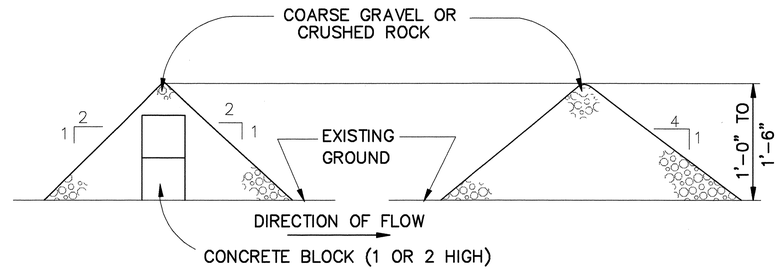

TEMPORARY EROSION CONTROL MEASURE

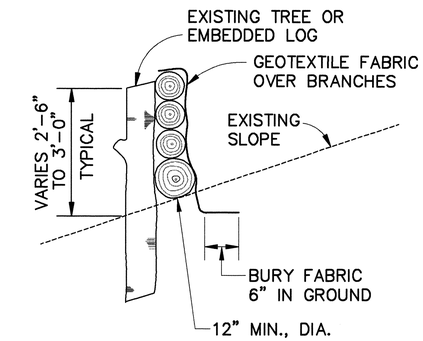

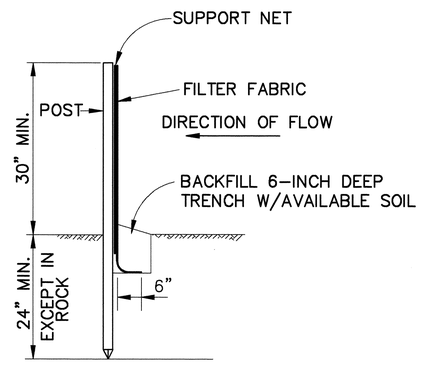

SILT FENCE DETAIL

N.T.S.

*SOME MANUFACTURERS ONLY SUPPLY SILT FENCE WITH WOODED POSTS. PRECAUTIONS SHALL BE TAKEN TO AVOID DAMAGES FROM DRIVING INTO HARD GROUND OR TERMITES.

NOTES:

1. FILTER FABRIC SHALL BE OF THE TYPE SPECIFIED AND INSTALLED IN COMBINATION WITH A SUPPORT NET OF POLYESTER NETTING OR APPROVED EQUAL. THE FILTER FABRIC SHALL BE A MINIMUM OF 36 INCHES WIDE AND THE SUPPORT NET A MINIMUM OF 30 INCHES.
2. IF SILT FENCE IS OBTAINED FROM MANUFACTURER AS A PACKAGE (I.E. FABRIC ATTACHED TO POSTS) THE MANUFACTURERS INSTALLATION INSTRUCTIONS SHALL BE ADHERED TO.
3. POSTS SHALL BE METAL* WHEREVER POSSIBLE, CROSS SECTION OF POST WILL BE SUBSTANTIAL ENOUGH TO SUPPORT A LOADED SILT FENCE WITHOUT BENDING. POST SPACING SHALL BE 4' TO 8', DEPENDING ON POST SIZE.

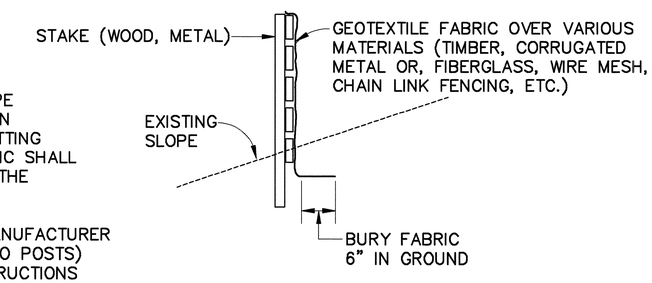

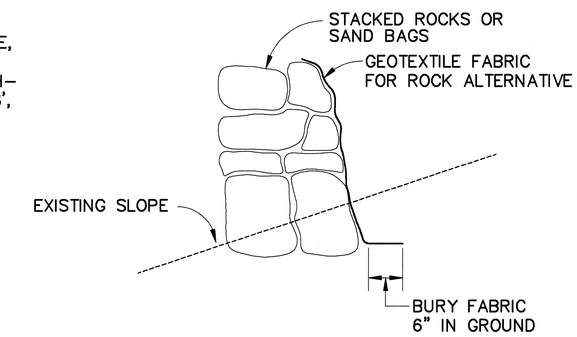

SEDIMENT CONTROL DEVICES AND/OR ENERGY DISSIPATOR

N.T.S.

ESTIMATED IN-PLACE EARTHWORK QUANTITIES

	H-3	ACCESS ROAD	RELOCATED STREAM NO. 1	AT BRIDGE NO. 2
EXCAVATION	200,600 C.Y.	31,700 C.Y.	6,000 C.Y.	7,000 C.Y.
EMBANKMENT (ON SITE SELECTED MATERIAL) (IMPORTED BORROW)	157,000 C.Y. 132,700 C.Y. 24,300 C.Y.	2,400 C.Y.	0 C.Y.	300 C.Y.
AREA OF GRADING	20.10 ACS.	3.65 ACS.	0.89 ACS.	–

REGINALD M. SUZUKA
REGISTERED PROFESSIONAL ENGINEER
No. 1462-C
HAWAII, U.S.A.

THIS WORK WAS PREPARED BY ME OR UNDER MY SUPERVISION
PorEn, INC.
dba: PARK ENGINEERING

DATE	REVISION
9/30/93	REVISED ESTIMATED QUANTITIES AND NOTE 4.

STATE OF HAWAII
DEPARTMENT OF TRANSPORTATION
HIGHWAYS DIVISION

GRADING NOTES EROSION AND SEDIMENT CONTROL MEASURES

INTERSTATE ROUTE H-3
F.A.I. PROJECT NO. I-H3-1(59)

SCALE: AS NOTED DATE: JUNE 1993

SHEET No. D1 OF 32 SHEETS

ADD. 31

ORIGINAL PLAN | NOTEBOOK No. | SURVEY PLOTTED BY | DRAWN BY | TRACED BY | DESIGNED BY | QUANTITIES BY | CHECKED BY | DATE

FED. ROAD DIST. NO.	STATE	FED. AID PROJ. NO.	FISCAL YEAR	SHEET NO.	TOTAL SHEETS
HAWAII	HAW.	I-H3-1 (59)	1993	ADD.32	211

METAL GUARD RAIL, TYPE 3 - SINGLE W/STEEL POSTS

℄ STA. 374+38 TO ℄ STA. 384+92 LT. (1054 LIN. FT.)
℄ STA. 385+56 TO ℄ STA. 387+25 RT. (160 LIN. FT.)
℄ STA. 374+38 TO ℄ STA. 376+00 RT. (162 LIN. FT.)

NOTE:
THE CONTRACTOR SHALL MAINTAIN THE FLOW OF TRAFFIC ALONG THE EXISTING CONSTRUCTION ACCESS ROAD AT ALL TIME WHILE HE IS GRADING THE HILLSIDE FOR THE NEW ACCESS ROAD. HE SHALL PROVIDE PROTECTIVE MEASURES/DEVICES TO INSURE THE SAFETY OF VEHICLES AND PERSONNEL USING THE EXISTING ACCESS ROAD FROM FALLING BOULDERS AND LARGE ROCKS DURING THE GRADING OPERATION. THE COST SHALL BE INCIDENTAL TO THE GRADING WORK.

NOTES:
1- ALL RCP SHALL BE CLASS III.
2- ALL SRMP SHALL BE ALUMINUM WITH SHEET THICKNESS, 0.075 INCH.
3- LIMITS OF FLOODING SHOWN IS BASED ON A 100 YEAR FLOOD.
4- THE CONTRACTOR SHALL CONTACT HAWAIIAN CEMENT AT LEAST 7 DAYS PRIOR TO PERFORMING WORK WITHIN THIER PROPERTY. THE CONTACT PERSON IS MR. CHARLES KUBO (PHONE: 483-3300)

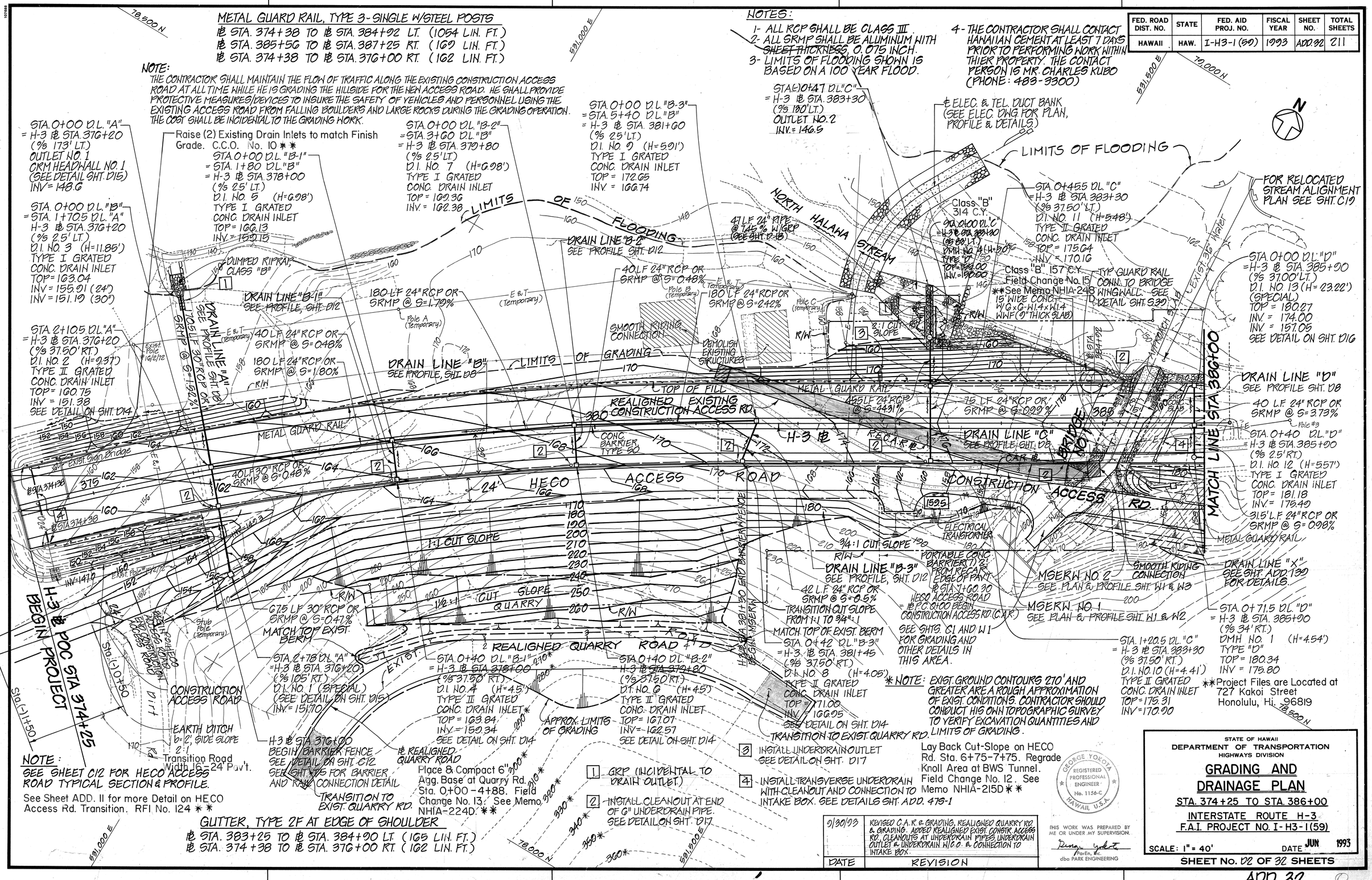

NOTE:
SEE SHEET C12 FOR HECO ACCESS ROAD TYPICAL SECTION & PROFILE.
See Sheet ADD. 11 for more Detail on HECO Access Rd. Transition. RFI No. 124 **

GUTTER, TYPE 2F AT EDGE OF SHOULDER

℄ STA. 383+25 TO ℄ STA. 384+90 LT. (165 LIN. FT.)
℄ STA. 374+38 TO ℄ STA. 376+00 RT. (162 LIN. FT.)

DATE	REVISION
9/30/93	REVISED C.A.R. & GRADING, REALIGNED QUARRY RD. & GRADING. ADDED REALIGNED EXIST. CONSTR. ACCESS RD., CLEANOUTS AT UNDERDRAIN PIPES, UNDERDRAIN OUTLET & UNDERDRAIN W/C.O. & CONNECTION TO INTAKE BOX.

ORIGINAL PLAN	SURVEY PLOTTED BY	DATE
	DRAWN BY	
NOTE BOOK	TRACED BY	
	DESIGNED BY	
No.	QUANTITIES BY	
	CHECKED BY	

GEORGE YOKOTA REGISTERED PROFESSIONAL ENGINEER No. 1156-C HAWAII, U.S.A.

THIS WORK WAS PREPARED BY ME OR UNDER MY SUPERVISION.
PaiEn, Inc. dba PARK ENGINEERING

STATE OF HAWAII
DEPARTMENT OF TRANSPORTATION
HIGHWAYS DIVISION

GRADING AND DRAINAGE PLAN

STA. 374+25 TO STA. 386+00
INTERSTATE ROUTE H-3
F.A.I. PROJECT NO. I-H3-1(59)

SCALE: 1" = 40' DATE JUN 1993

SHEET No. D2 OF 32 SHEETS

ADD. 32

FED. ROAD DIS. NO.	STATE	FED. AID PROJ. NO.	FISCAL YEAR	SHEET NO.	TOTAL SHEETS
HAWAII	HAW.	I-H3-1(59)	1993	C.O. ADD. 32S-1	211

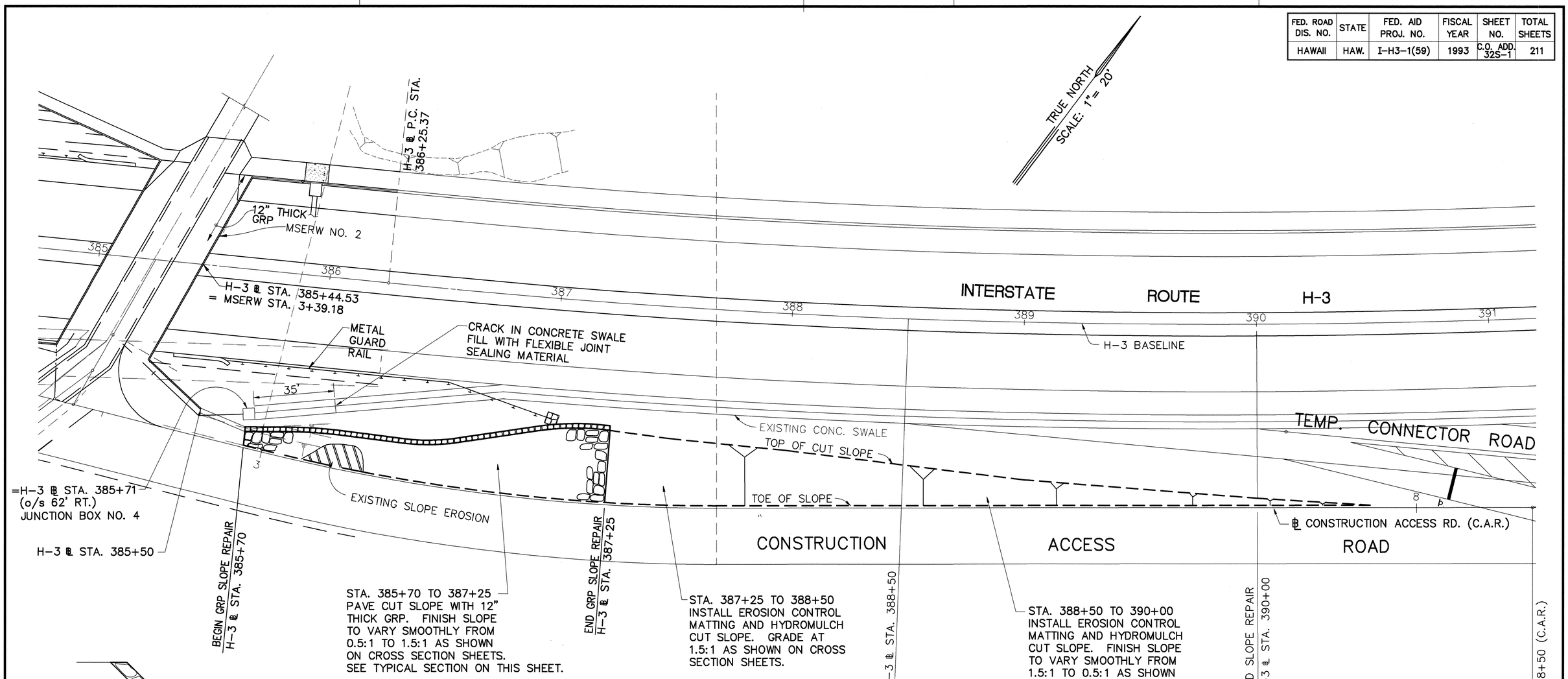

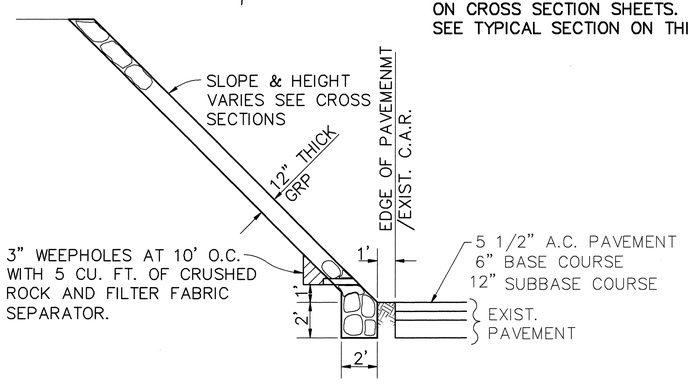

TYPICAL SECTION FOR GRP
H-3 ℄ STA. 385+70 TO 387+25

SCALE: 1/4"= 1'-0"

DATE	REVISION
10/31/95	SHEET ADDED FOR SLOPE REPAIR ALONG C.A.R.

REGINALD M. SUZUKA
LICENSED PROFESSIONAL ENGINEER
No. 1462-C
HAWAII, U.S.A.

THIS WORK WAS PREPARED BY ME OR UNDER MY SUPERVISION

Reginald M. Suzuka

PerEn, INC. & dba: PARK ENGINEERING

STATE OF HAWAII
DEPARTMENT OF TRANSPORTATION
HIGHWAYS DIVISION

SLOPE REPAIR ALONG C.A.R.

STA. 385+70 TO 390+50

INTERSTATE ROUTE H-3

F.A.I. PROJECT NO. I-H3-1(59)

SCALE: AS SHOWN DATE: OCT. 1995

SHEET NO. D2A OF 32 SHEETS

C.O. ADD. 32S-1

ORIGINAL PLAN | NOTEBOOK No. | SURVEY PLOTTED BY | DRAWN BY | TRACED BY | DESIGNED BY | QUANTITIES BY | CHECKED BY | DATE

H352SLOP
11/9/95 FMS 07/29/96 MSC

FED. ROAD DIST. NO.	STATE	FED. AID PROJ. NO.	FISCAL YEAR	SHEET NO.	TOTAL SHEETS
HAWAII	HAW.	I-H3-1(59)	1993	ADD. 33	211

CONCRETE SWALE 6' WIDE AT EDGE OF SHOULDER
℄ STA. 386+75 TO ℄ STA. 398+00 RT. (1125 LIN. FT.)

METAL GUARD RAIL, TYPE 3 - SINGLE W/STEEL POSTS
℄ STA. 387+96 TO ℄ STA. 390+10 LT. (214 LIN. FT.)
℄ STA. 395+90 TO ℄ STA. 397+92 LT. (202 LIN. FT.)

GUTTER, TYPE 2G AT EDGE OF SHOULDER
℄ STA. 389+05 TO ℄ STA. 391+40 LT. (235 LIN. FT.)

ALL RCP SHALL BE CLASS III.
ALL SRMP SHALL BE ALUMINUM WITH SHEET THICKNESS, 0.075 INCH.
LIMITS OF FLOODING SHOWN IS BASED ON A 100 YEAR FLOOD.

CONTRACTOR SHALL SALVAGE, TRANSPORT AND STORE BRIDGE AT THE STATE DEPT. OF TRANSPORTATION PEARL CITY BASEYARD OR WITHIN 5 MILES FROM THIS PROJECT SITE, AS DIRECTED BY THE ENGINEER.

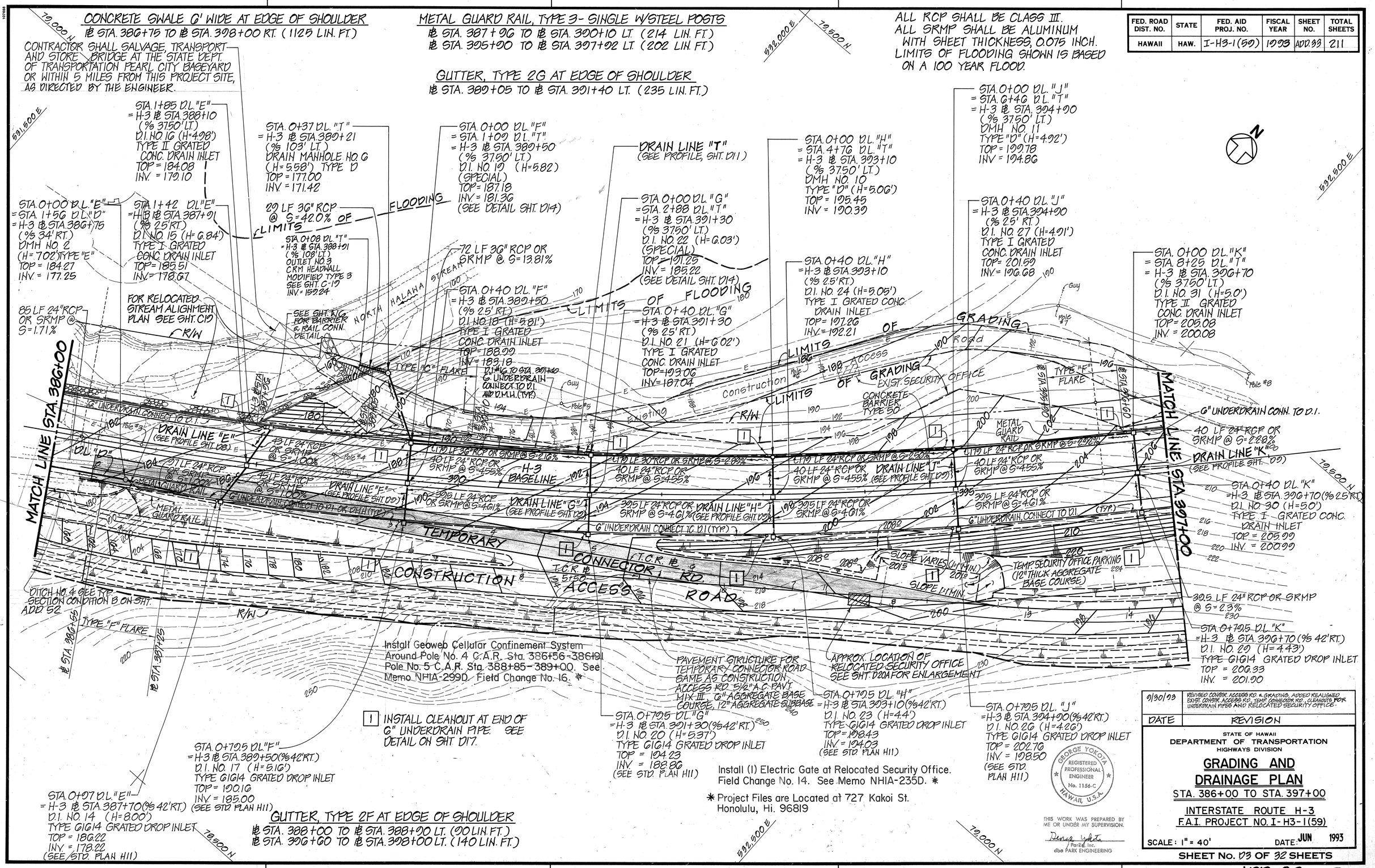

[1] INSTALL CLEANOUT AT END OF 6" UNDERDRAIN PIPE. SEE DETAIL ON SHT. D17.

Install (1) Electric Gate at Relocated Security Office. Field Change No. 14. See Memo NHIA-235D. *

* Project Files are Located at 727 Kakoi St. Honolulu, Hi. 96819

DATE	REVISION
9/30/93	REVISED CONSTR. ACCESS RD. & GRADING, ADDED REALIGNED EXIST. CONSTR. ACCESS RD., 6" DIA. CONNECTOR RD., CLEANOUTS FOR UNDERDRAIN PIPES AND RELOCATED SECURITY OFFICE.

STATE OF HAWAII
DEPARTMENT OF TRANSPORTATION
HIGHWAYS DIVISION

GRADING AND DRAINAGE PLAN

STA. 386+00 TO STA. 397+00

INTERSTATE ROUTE H-3
F.A.I. PROJECT NO. I-H3-1(59)

SCALE: 1" = 40' DATE: JUN 1993

SHEET No. D3 OF 32 SHEETS

GEORGE YOKOTA REGISTERED PROFESSIONAL ENGINEER No. 1156-C HAWAII, U.S.A.

THIS WORK WAS PREPARED BY ME OR UNDER MY SUPERVISION.
Parsons, Inc. dba PARK ENGINEERING

ORIGINAL PLAN | SURVEY PLOTTED BY | DRAWN BY | TRACED BY | DESIGNED BY | QUANTITIES BY | CHECKED BY | DATE
NOTE BOOK | No.

ADD. 33

33 1A

FED. ROAD DIST. NO.	STATE	FED. AID PROJ. NO.	FISCAL YEAR	SHEET NO.	TOTAL SHEETS
HAWAII	HAW.	I-H3-1(59)	1993	ADD.34	211

NOTE: ALL RCP SHALL BE CLASS III.
ALL SRMP SHALL BE ALUMINUM WITH SHEET THICKNESS, 0.075 INCH.
LIMITS OF FLOODING SHOWN IS BASED ON A 100 YEAR FLOOD.

GUTTER, TYPE 2F AT EDGE OF SHOULDER
℄ STA. 400+50 TO ℄ STA. 410+15 LT. (965 LIN. FT.)
℄ STA. 401+15 TO ℄ STA. 409+00 RT. (785 LIN. FT.)

METAL GUARD RAIL, TYPE 3 - SINGLE W/STEEL POSTS
℄ STA. 400+42 TO ℄ STA. 410+20 LT. (978 LIN. FT.)
℄ STA. 401+12 TO ℄ STA. 409+00 RT. (788 LIN. FT.)
℄ STA. 414+60 TO ℄ STA. 415+00 LT. (40 LIN. FT.)

NOTE: FOR GRADING PLAN OF EMERGENCY ESCAPE RAMP & LINED DITCH NO. 1 NOT SHOWN ON THIS SHEET, SEE SHTS. D6 & D7.

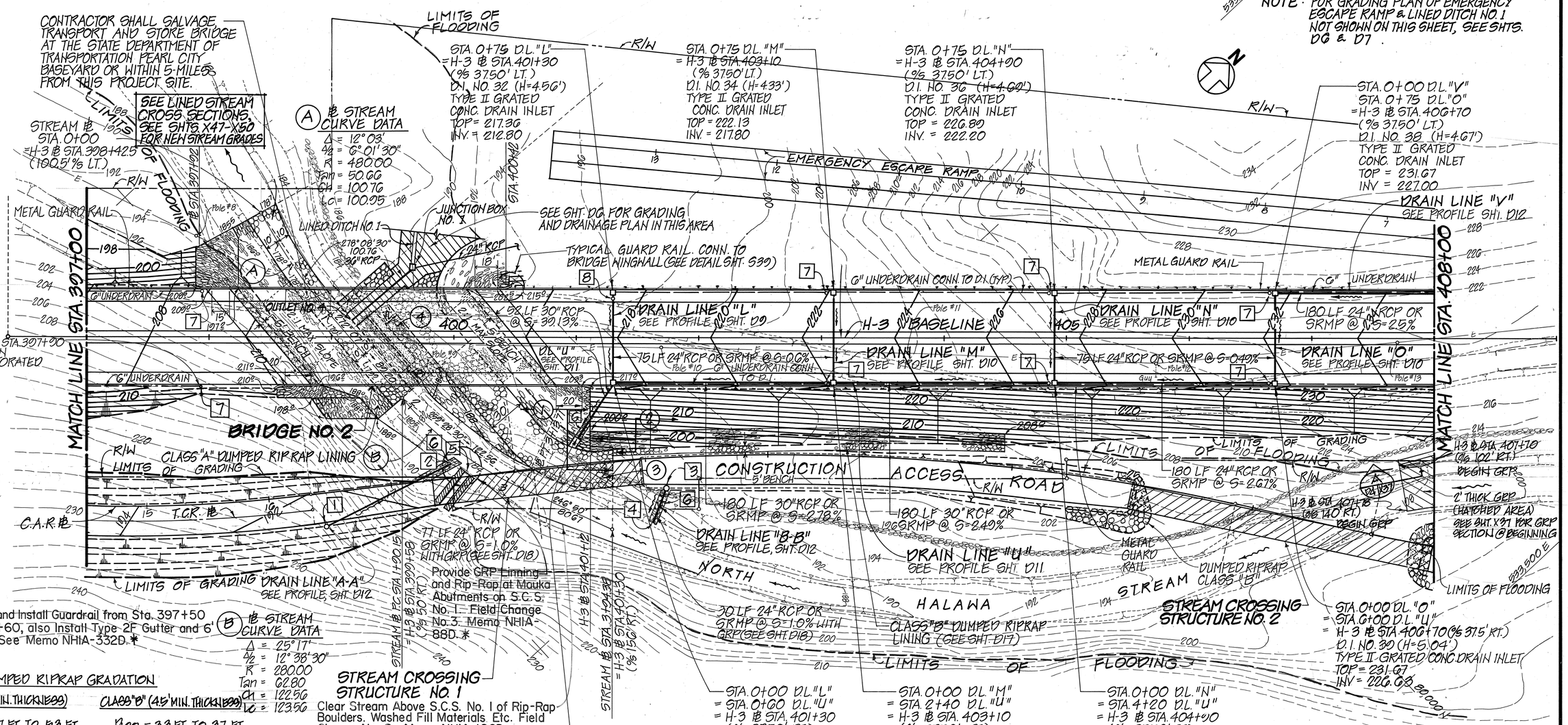

DUMPED RIPRAP GRADATION

CLASS "A" (6.5' MIN. THICKNESS)	CLASS "B" (4.5' MIN. THICKNESS)
D100 = 4.7 FT. TO 5.3 FT.	D100 = 3.3 FT. TO 3.7 FT.
D85 = 3.7 FT. TO 4.4 FT.	D85 = 2.6 FT. TO 3.0 FT.
D50 = 3.1 FT. TO 3.6 FT.	D50 = 2.2 FT. TO 2.5 FT.
D15 = 1.3 FT. TO 1.0 FT.	D15 = 0.9 FT. TO 1.0 FT.

C.A.R. DRAIN LINE DATA

DRAIN LINE "A-A"

1 STA. 0+77 D.L. "A-A" = C.A.R. ℄ STA. 10+44.56 (% 24' RT.) DROP INTAKE # 3 TYPE "A" INV = 186.77

2 STA. 0+00 D.L. "A-A" = C.A.R. ℄ STA. 10+41 (% 12' LT.) OUTLET NO. 6 INV = 186.0

DRAIN LINE "B-B"

3 STA. 0+30 D.L. "B-B" = C.A.R. ℄ STA. 21+16 (% 25' RT.) DROP INTAKE # 4 TYPE "A" INV = 180.30

4 STA. 0+00 D.L. "B-B" = C.A.R. ℄ STA. 21+02 (% 50' RT.) OUTLET NO. 7 INV = 180.00

5 EXTEND TYPE A DITCH TO STREAM. SEE DETAIL (B / D4 / D18)

6 GRP (INCIDENTAL TO DRAIN OUTLET)

(1) CLASS A DUMPED RIPRAP
(2) CLASS B DUMPED RIPRAP
(3) CLASS A DUMPED RIPRAP BELOW SCS NO. 1 SHALL BE PLACED PRIOR TO INSTALLING BRIDGE DECK
(4) SHADE AREA DENOTES LIMITS OF 10' THICK CLASS "A" DUMPED RIPRAP. SEE DETAIL (B / D4 / D17) AL90

Install S.C.S. Protection at 6" Galv. Pipe Barriers on Traffic Bearing Corners. Field Change No. 8. Memo NHIA-147D *

* Project Files are Located at 727 Kakoi St. Honolulu, Hi. 96819

DATE	REVISION
0/20/03	REVISED CONSTR. ACCESS RD. & GRADING, ADDED CLEANOUT @ UNDERDRAIN PIPES, AND UNDERDRAIN AT 401+30 W/CLEANOUT & CONN. TO D.I.

STATE OF HAWAII
DEPARTMENT OF TRANSPORTATION
HIGHWAYS DIVISION

GRADING AND DRAINAGE PLAN

STA. 397+00 TO STA. 408+00

INTERSTATE ROUTE H-3
F.A.I. PROJECT NO. I-H3-1(59)

SCALE: 1" = 40' DATE: JUN 1993

SHEET No. D4 OF 32 SHEETS

GEORGE YOKOTA REGISTERED PROFESSIONAL ENGINEER No. 1156-C HAWAII, U.S.A.

THIS WORK WAS PREPARED BY ME OR UNDER MY SUPERVISION.
George Yokota
Par En, Inc.
dba PARK ENGINEERING

SURVEY PLOTTED BY
DRAWN BY
TRACED BY
DESIGNED BY
QUANTITIES BY
CHECKED BY
DATE
ORIGINAL PLANS
NOTE BOOK
No.

ADD. 34

FED. ROAD DIST. NO.	STATE	FED. AID PROJ. NO.	FISCAL YEAR	SHEET NO.	TOTAL SHEETS
HAWAII	HAW.	I-H3-1(59)	1993	ADD35	211

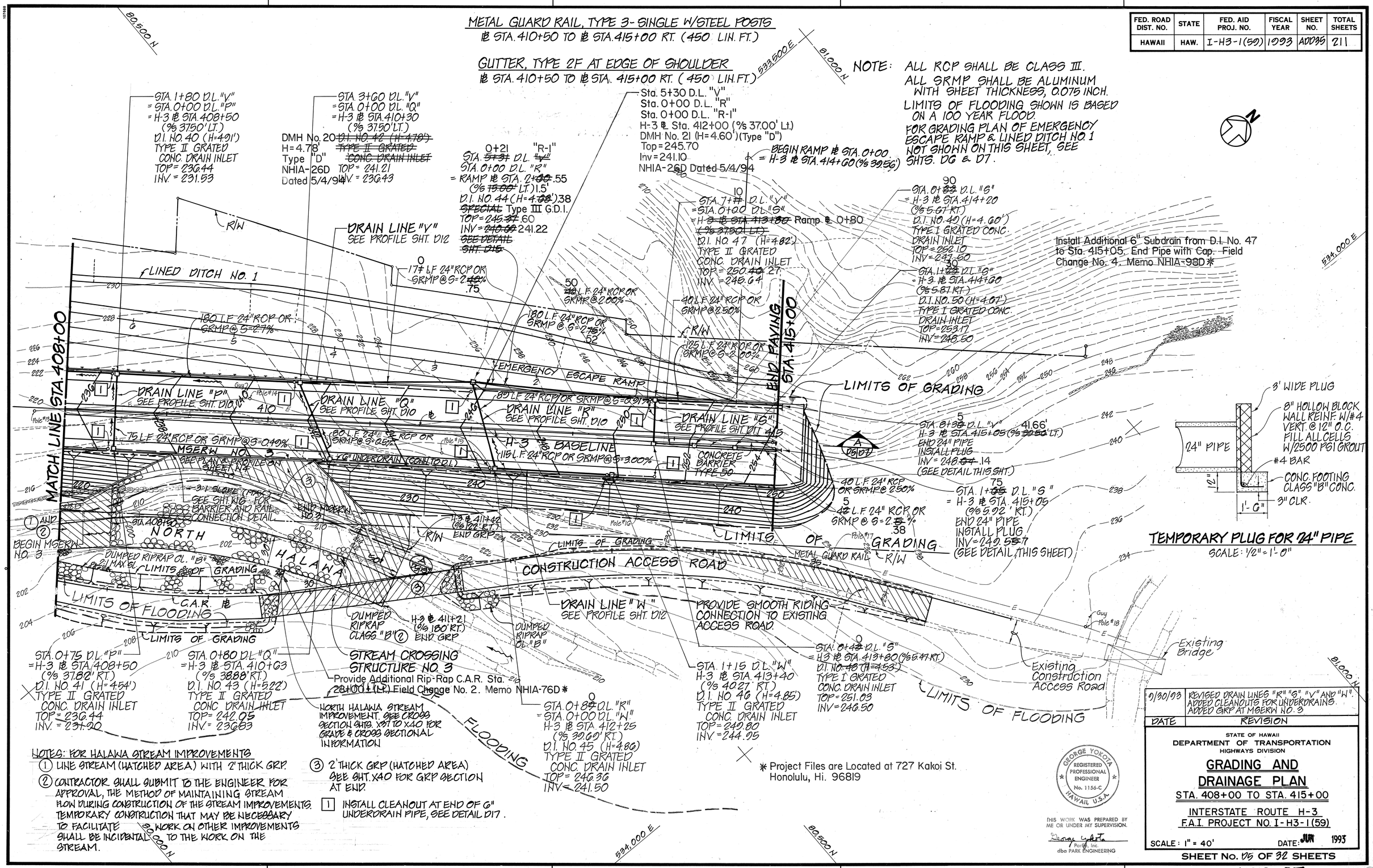

NOTE: ALL RCP SHALL BE CLASS III.
ALL SRMP SHALL BE ALUMINUM WITH SHEET THICKNESS, 0.075 INCH.
LIMITS OF FLOODING SHOWN IS BASED ON A 100 YEAR FLOOD.
FOR GRADING PLAN OF EMERGENCY ESCAPE RAMP & LINED DITCH NO. 1 NOT SHOWN ON THIS SHEET, SEE SHTS. D6 & D7.

TEMPORARY PLUG FOR 24" PIPE
SCALE: 1/2" = 1'-0"

NOTES: FOR HALAWA STREAM IMPROVEMENTS
① LINE STREAM (HATCHED AREA) WITH 2' THICK GRP.
② CONTRACTOR SHALL SUBMIT TO THE ENGINEER FOR APPROVAL, THE METHOD OF MAINTAINING STREAM FLOW DURING CONSTRUCTION OF THE STREAM IMPROVEMENTS. TEMPORARY CONSTRUCTION THAT MAY BE NECESSARY TO FACILITATE WORK ON OTHER IMPROVEMENTS SHALL BE INCIDENTAL TO THE WORK ON THE STREAM.
③ 2' THICK GRP (HATCHED AREA) SEE SHT. X40 FOR GRP SECTION AT END.
1 INSTALL CLEANOUT AT END OF 6" UNDERDRAIN PIPE, SEE DETAIL D17.

* Project Files are Located at 727 Kakoi St.
Honolulu, Hi. 96819

GEORGE YOKOTA
No. 1156-C

THIS WORK WAS PREPARED BY ME OR UNDER MY SUPERVISION.
George Yokota
ParEn, Inc.
dba PARK ENGINEERING

DATE	REVISION
9/30/93	REVISED DRAIN LINES "R" "S" "V" AND "W". ADDED CLEANOUTS FOR UNDERDRAINS. ADDED GRP AT MSERW NO. 3

STATE OF HAWAII
DEPARTMENT OF TRANSPORTATION
HIGHWAYS DIVISION

GRADING AND DRAINAGE PLAN

STA. 408+00 TO STA. 415+00

INTERSTATE ROUTE H-3
F.A.I. PROJECT NO. I-H3-1(59)

SCALE: 1" = 40'
DATE: JUN 1993

SHEET No. D5 OF 32 SHEETS

ADD. 35

ORIGINAL PLAN
NOTE BOOK
No.
SURVEY PLOTTED BY
DRAWN BY
TRACED BY
DESIGNED BY
QUANTITIES BY
CHECKED BY
DATE

FED. ROAD DIS. NO.	STATE	FED. AID PROJ. NO.	FISCAL YEAR	SHEET NO.	TOTAL SHEETS
HAWAII	HAW.	I-H3-1(59)	1993	36	211

NOTES:
1. ALL RCP SHALL BE CLASS III
   ALL SRMP SHALL BE ALUMINUM
   SHEET THICKNESS, 0.075 INCH
2. ALIGNMENT AND INVERT FOR LINED DITCH "2" SHALL BE ADJUSTED AS NECESSARY TO FIT FIELD CONDITIONS
3. SEE SHEETS C10 AND C11 FOR PROFILE OF EMERGENCY ESCAPE RAMP.

CONCRETE LINED DITCH – CONDITION "A"

H-3 ℄ STA. 400+92 (LT.) TO H-3 ℄ STA. 403+42 (250 LIN. FT.)
H-3 ℄ STA. 407+14 (LT.) TO H-3 ℄ STA. 410+00 (286 LIN. FT.)

CONCRETE LINED DITCH – CONDITION "B"

H-3 ℄ STA. 403+42 (LT.) TO H-3 ℄ STA. 407+14 (372 LIN. FT.)

METAL GUARD RAIL, TYPE 3 – SINGLE w/ STEEL POSTS

RAMP ℄ STA. 4+39 (LT.) TO RAMP ℄ STA. 13+85 (LT.) (946 LIN. FT.)
RAMP ℄ STA. 0+00 (RT.) TO RAMP ℄ STA. 13+85 (RT.) (1385 LIN. FT.)

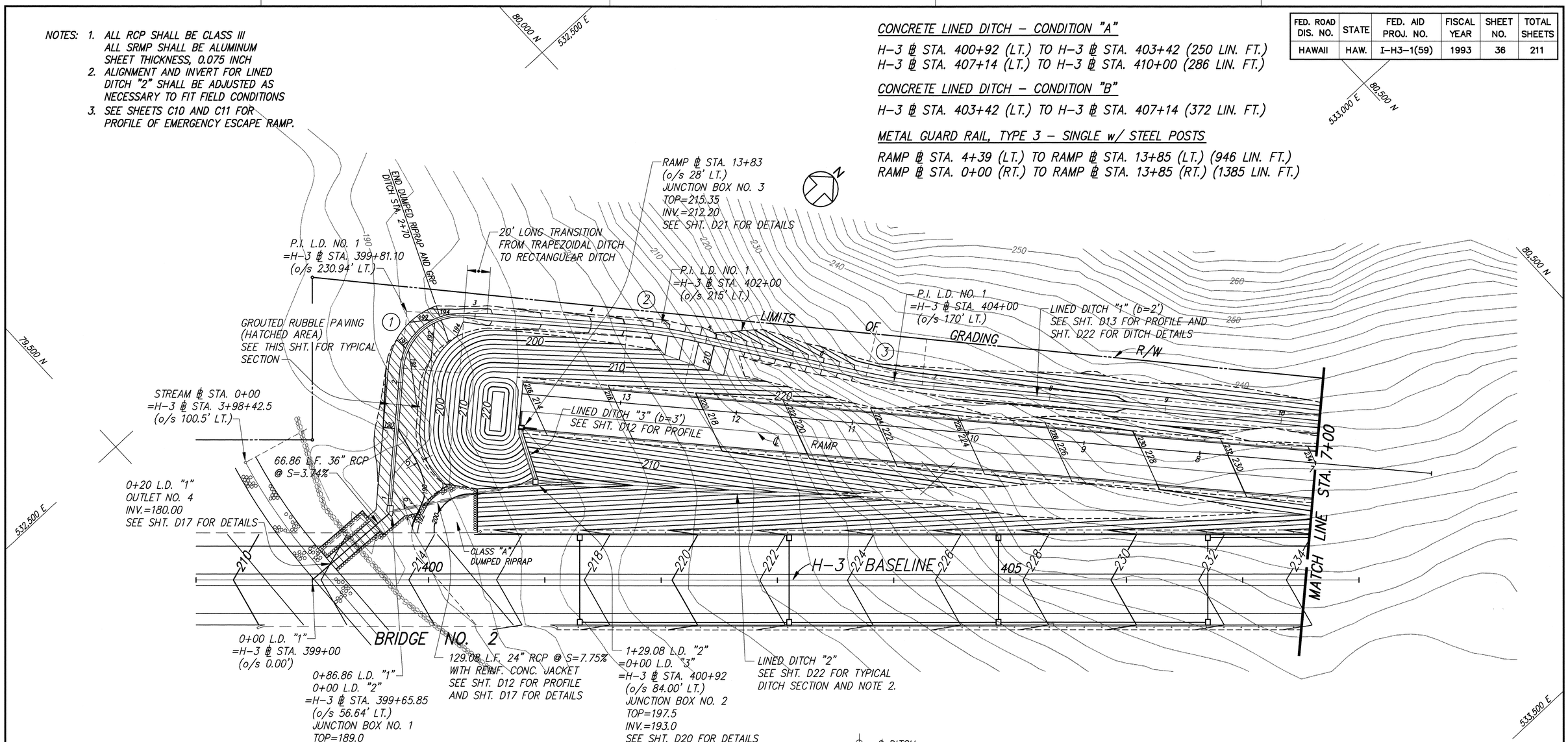

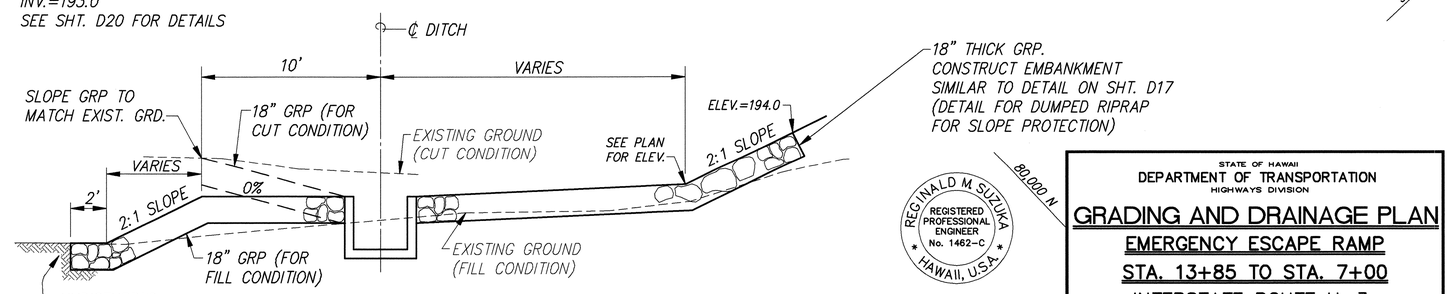

TYPICAL SECTION
ALONG LINED DITCH "1" (RECTANGULAR DITCH)
N.T.S.

REGINALD M SUZUKA
REGISTERED PROFESSIONAL ENGINEER
No. 1462-C
HAWAII, U.S.A.

THIS WORK WAS PREPARED BY ME OR UNDER MY SUPERVISION
PorEn, INC.
dba: PARK ENGINEERING

STATE OF HAWAII
DEPARTMENT OF TRANSPORTATION
HIGHWAYS DIVISION

GRADING AND DRAINAGE PLAN
EMERGENCY ESCAPE RAMP
STA. 13+85 TO STA. 7+00
INTERSTATE ROUTE H-3
F.A.I. PROJECT NO. I-H3-1(59)

SCALE: 1" = 40' DATE: JUNE 1993

SHEET No. D6 OF 32 SHEETS

ORIGINAL PLAN
NOTEBOOK No.
SURVEY PLOTTED BY
DRAWN BY
TRACED BY
DESIGNED BY
QUANTITIES BY
CHECKED BY
DATE

ROTATION POINT
ROTATED 47° 10' 57" CW

EERPLAN1 2/10/93 GKI
PHASE-1A 4/28/93 FMS
RE-PACKAGE 5/26/93 FMS

FED. ROAD DIS. NO.	STATE	FED. AID PROJ. NO.	FISCAL YEAR	SHEET NO.	TOTAL SHEETS
HAWAII	HAW.	I-H3-1(59)	1993	37	211

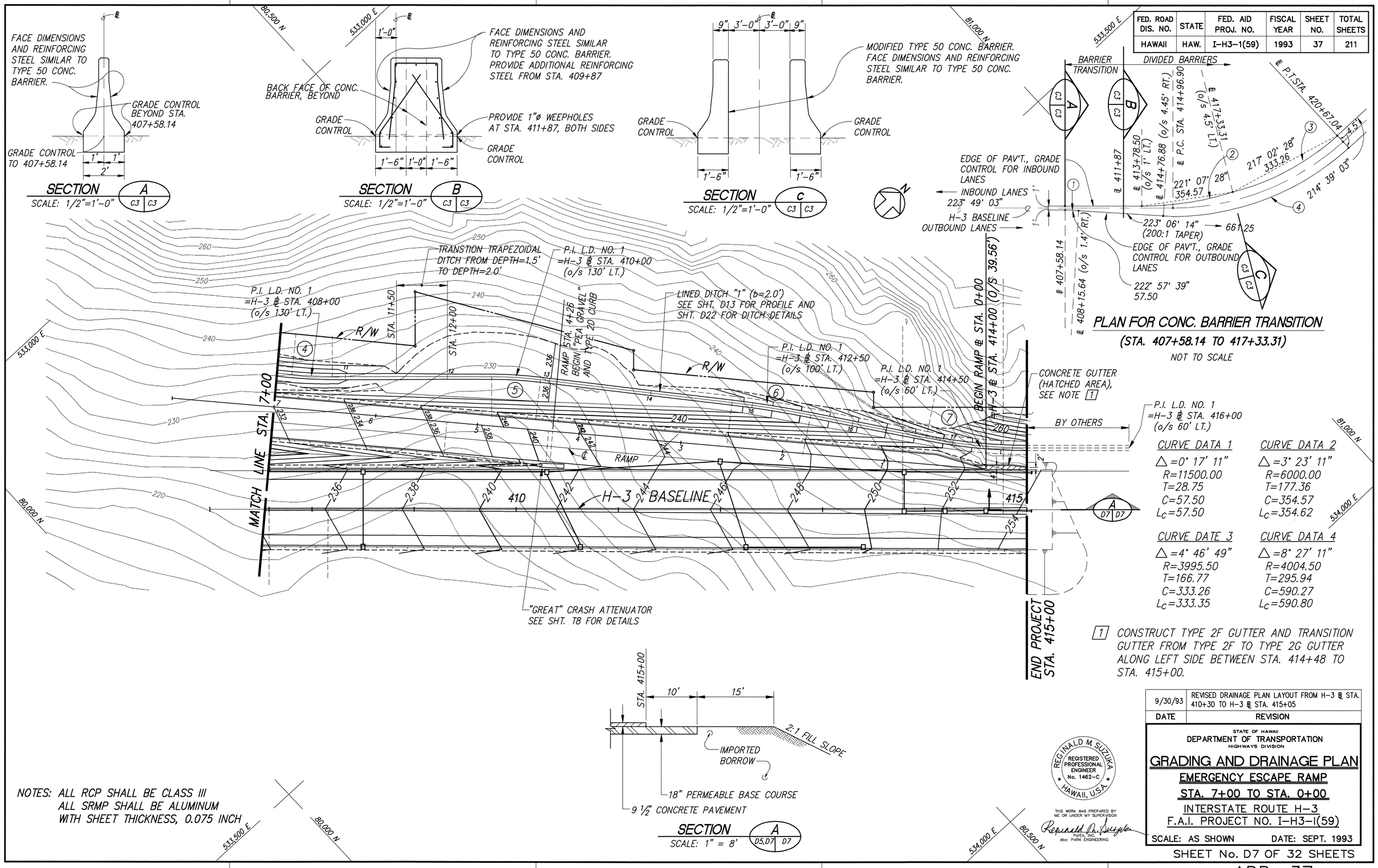

1 CONSTRUCT TYPE 2F GUTTER AND TRANSITION GUTTER FROM TYPE 2F TO TYPE 2G GUTTER ALONG LEFT SIDE BETWEEN STA. 414+48 TO STA. 415+00.

NOTES: ALL RCP SHALL BE CLASS III
ALL SRMP SHALL BE ALUMINUM
WITH SHEET THICKNESS, 0.075 INCH

DATE	REVISION
9/30/93	REVISED DRAINAGE PLAN LAYOUT FROM H-3 ℄ STA. 410+30 TO H-3 ℄ STA. 415+05

STATE OF HAWAII
DEPARTMENT OF TRANSPORTATION
HIGHWAYS DIVISION

GRADING AND DRAINAGE PLAN
EMERGENCY ESCAPE RAMP
STA. 7+00 TO STA. 0+00
INTERSTATE ROUTE H-3
F.A.I. PROJECT NO. I-H3-1(59)

SCALE: AS SHOWN DATE: SEPT. 1993

REGINALD M SUZUKA REGISTERED PROFESSIONAL ENGINEER No. 1462-C HAWAII, U.S.A.

THIS WORK WAS PREPARED BY ME OR UNDER MY SUPERVISION
ParEn, INC. dba: PARK ENGINEERING

SHEET No. D7 OF 32 SHEETS

ADD. 37

ORIGINAL PLAN | NOTEBOOK No. | SURVEY PLOTTED BY | DRAWN BY | TRACED BY | DESIGNED BY | QUANTITIES BY | CHECKED BY | DATE

ROTATION POINT ROTATED 47° 10' 57" CW

EERPLAN2 PHASE-1A RE-PACKAGE 9/10/93 RSO

FED. ROAD DIS. NO.	STATE	FED. AID PROJ. NO.	FISCAL YEAR	SHEET NO.	TOTAL SHEETS
HAWAII	HAW.	I-H3-1(59)	1993	38	211

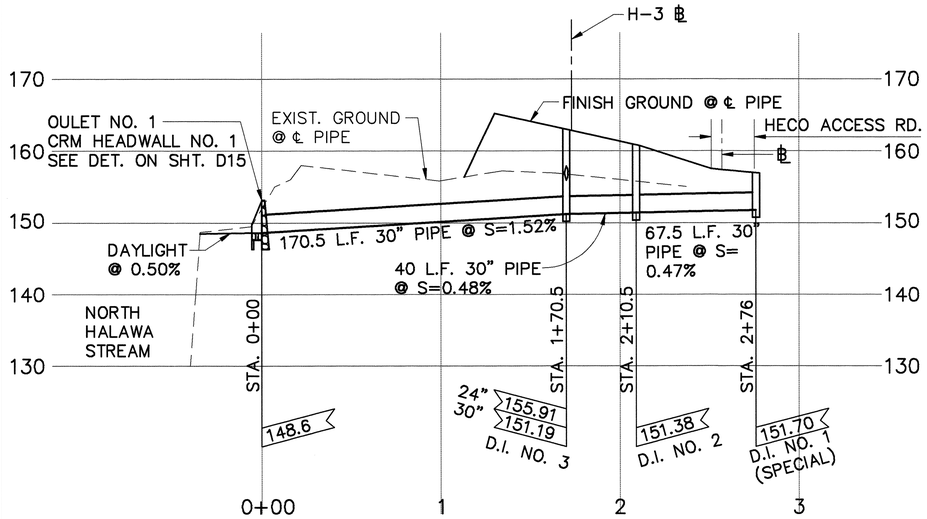

PROFILE - DRAIN LINE "A"
H-3 STA. 376+20

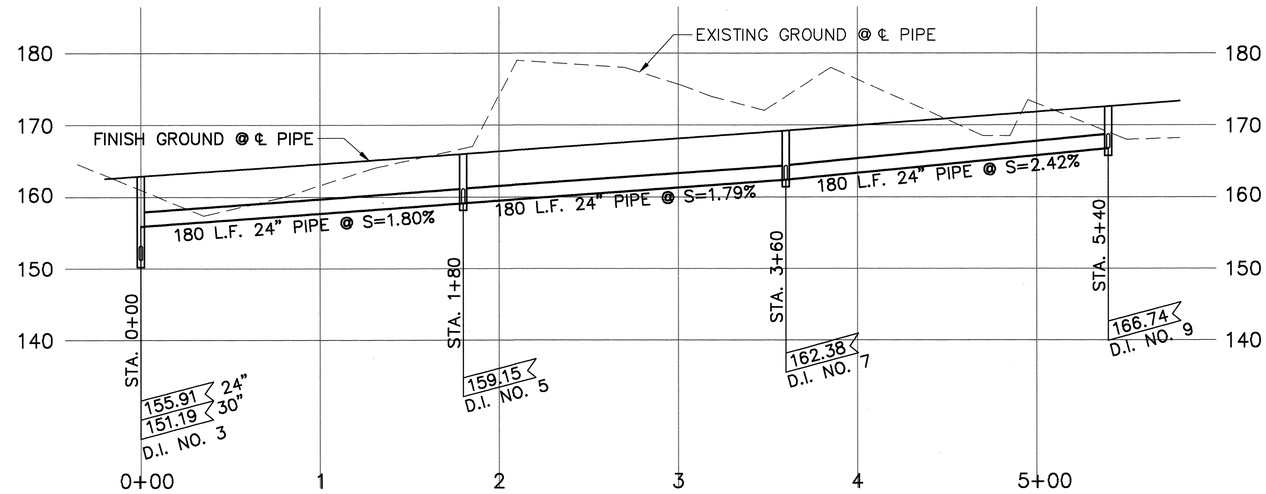

PROFILE - DRAIN LINE "B"
H-3 STA. 376+20 TO 381+60

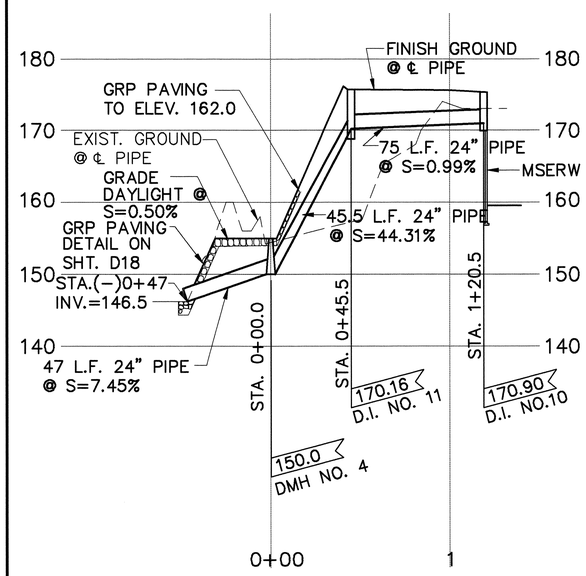

PROFILE - DRAIN LINE "C"
H-3 STA. 383+30

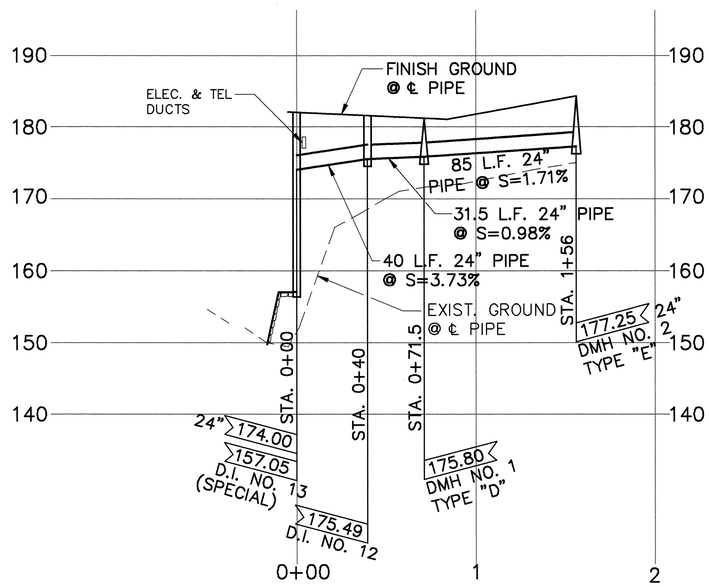

PROFILE - DRAIN LINE "D"
H-3 STA. 385+90

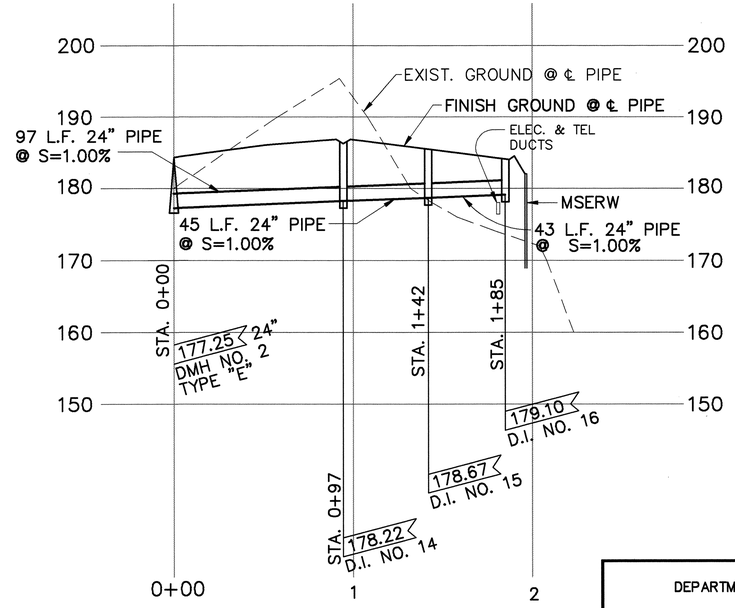

PROFILE - DRAIN LINE "E"
H-3 STA. 386+75 TO 388+10

SCALE : HORIZ. 1" = 40'
VERT. 1" = 10'

REGINALD M. SUZUKA
REGISTERED PROFESSIONAL ENGINEER
No. 1462-C
HAWAII, U.S.A.

THIS WORK WAS PREPARED BY ME OR UNDER MY SUPERVISION

Reginald M. Suzuka
Parsons, Inc.
dba: PARK ENGINEERING

STATE OF HAWAII
DEPARTMENT OF TRANSPORTATION
HIGHWAYS DIVISION

PROFILES
DRAIN LINES "A", "B", "C", "D" & "E"

INTERSTATE ROUTE H-3
F.A.I. PROJECT NO. I-H3-1(59)

SCALE: AS SHOWN DATE: JUNE 1993

SHEET No. D8 OF 32 SHEETS

ORIGINAL PLAN
NOTEBOOK No.
SURVEY PLOTTED BY DATE
DRAWN BY
TRACED BY
DESIGNED BY
QUANTITIES BY
CHECKED BY

DRAPRO1 4/20/92 AMM
PHASE 1A 5/14/93 FMS

FED. ROAD DIS. NO.	STATE	FED. AID PROJ. NO.	FISCAL YEAR	SHEET NO.	TOTAL SHEETS
HAWAII	HAW.	I-H3-1(59)	1993	39	211

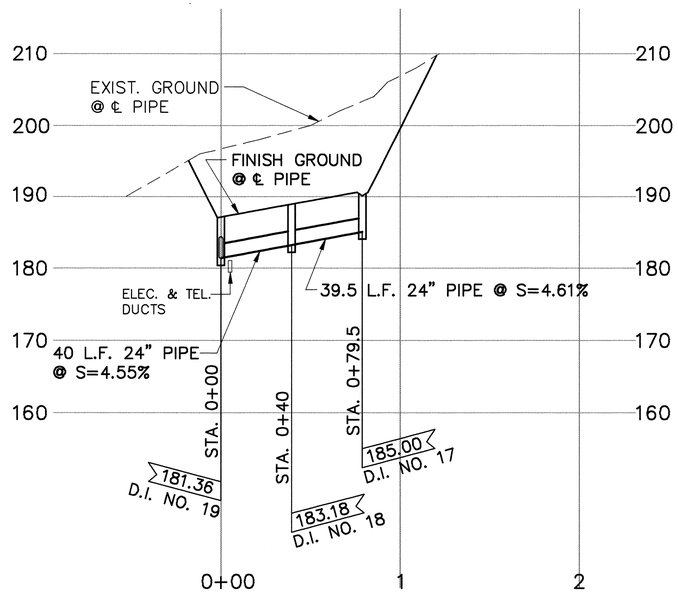

PROFILE - DRAIN LINE "F"
H-3 STA. 389+50

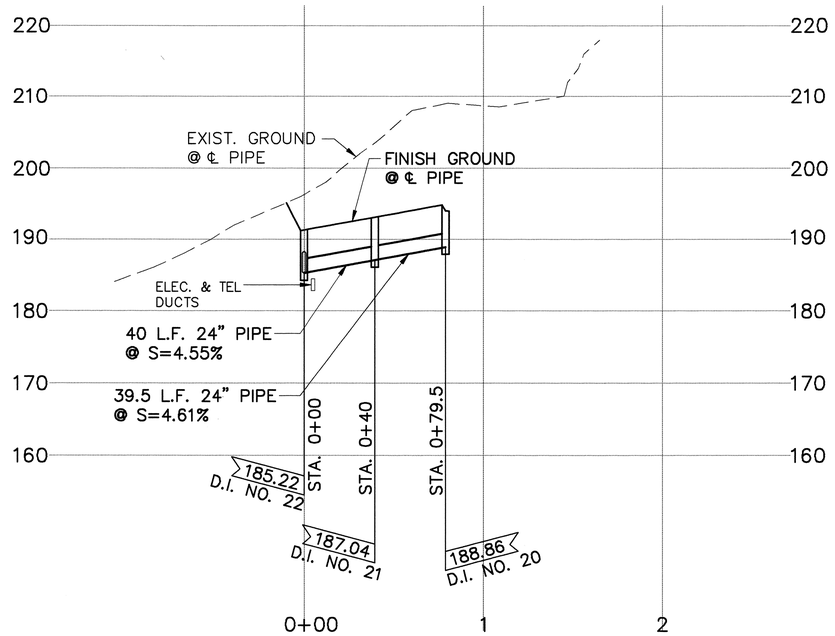

PROFILE - DRAIN LINE "G"
H-3 STA. 391+30

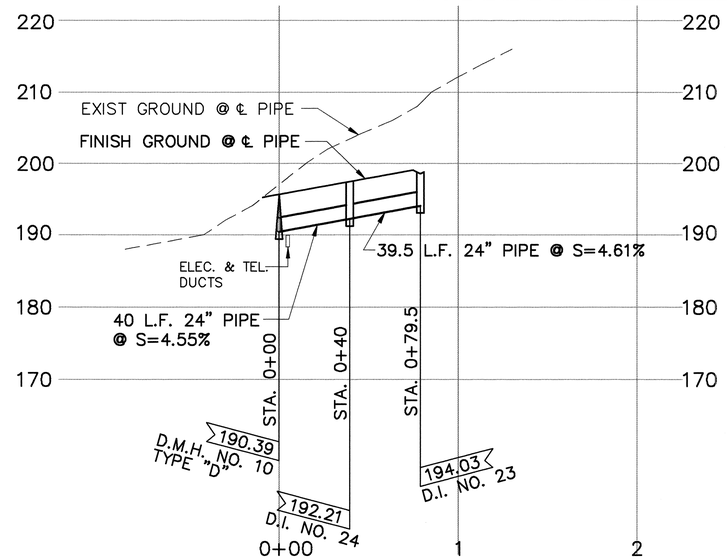

PROFILE - DRAIN LINE "H"
H-3 STA. 393+10

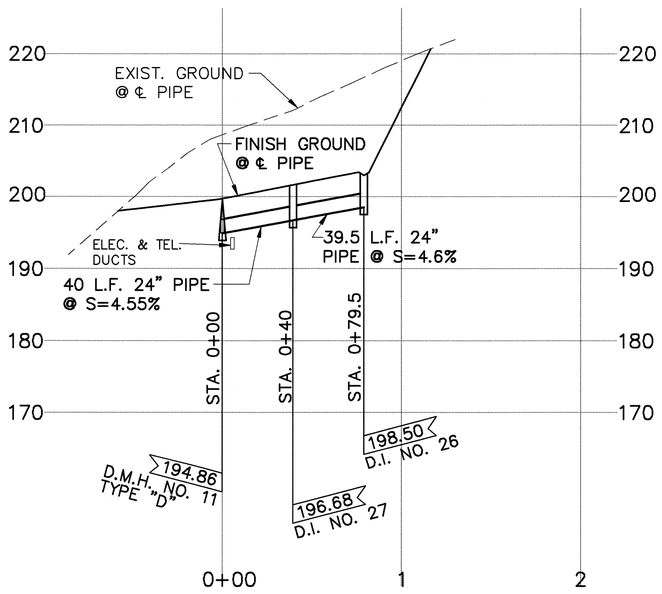

PROFILE - DRAIN LINE "J"
H-3 STA. 394+90

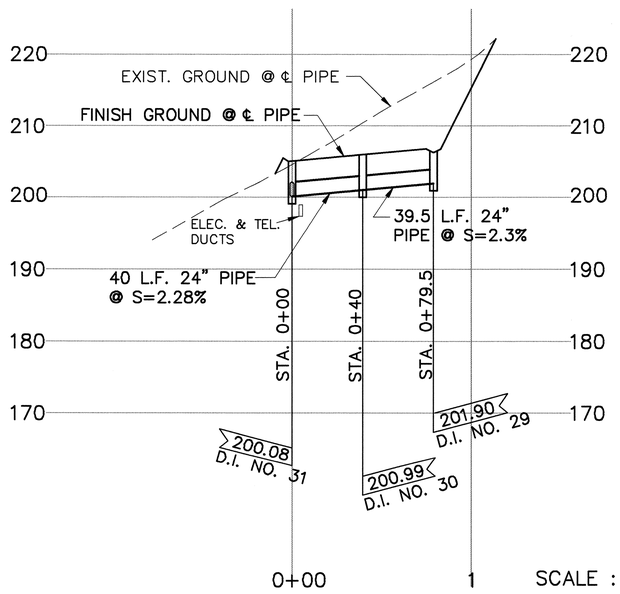

PROFILE - DRAIN LINE "K"
H-3 STA. 396+70

SCALE : HORIZ. 1" = 40'
VERT. 1" = 10'

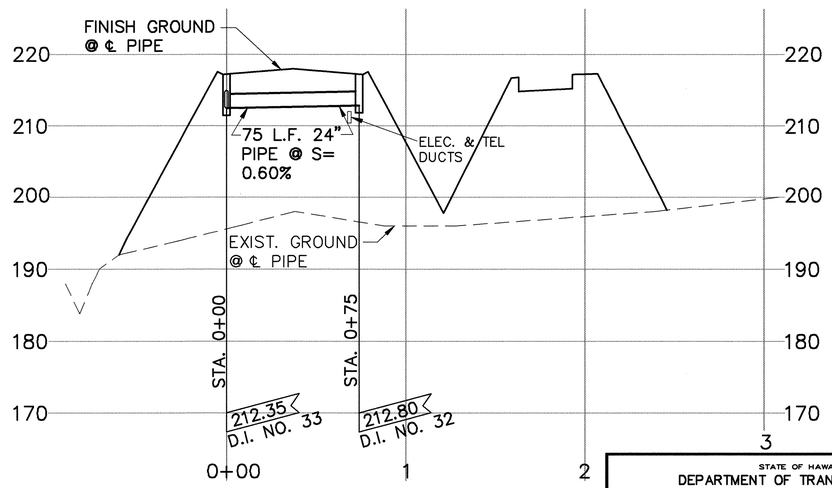

PROFILE - DRAIN LINE "L"
H-3 STA. 401+30

REGINALD M. SUZUKA
REGISTERED PROFESSIONAL ENGINEER
No. 1462-C
HAWAII, U.S.A.

THIS WORK WAS PREPARED BY ME OR UNDER MY SUPERVISION
Reginald M. Suzuka
PGEI, INC.
dba: PARK ENGINEERING

STATE OF HAWAII
DEPARTMENT OF TRANSPORTATION
HIGHWAYS DIVISION

PROFILES
DRAIN LINES F, G, H, J, K & L

INTERSTATE ROUTE H-3
F.A.I. PROJECT NO. I-H3-1(59)

SCALE: AS SHOWN DATE: JUNE 1993

SHEET No. D9 OF 32 SHEETS

ORIGINAL PLAN | NOTEBOOK No. | SURVEY PLOTTED BY | DRAWN BY | TRACED BY | DESIGNED BY | QUANTITIES BY | CHECKED BY | DATE

DRAPRO2 4/20/92 AMM
PHASE 1A 1/29/93 MSC
4/28/93 FMS

FED. ROAD DIS. NO.	STATE	FED. AID PROJ. NO.	FISCAL YEAR	SHEET NO.	TOTAL SHEETS
HAWAII	HAW.	I-H3-1(59)	1993	ADD.40	211

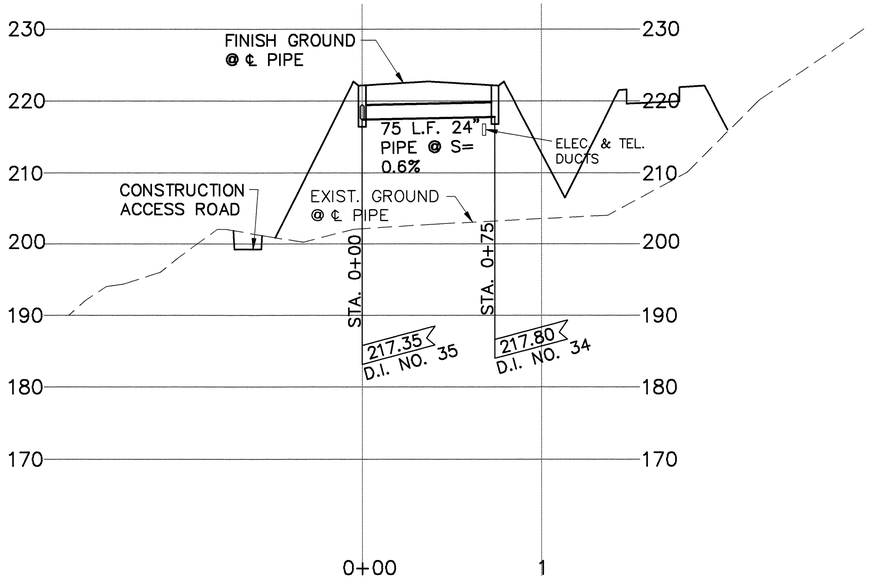

PROFILE - DRAIN LINE "M"
H-3 STA. 403+10

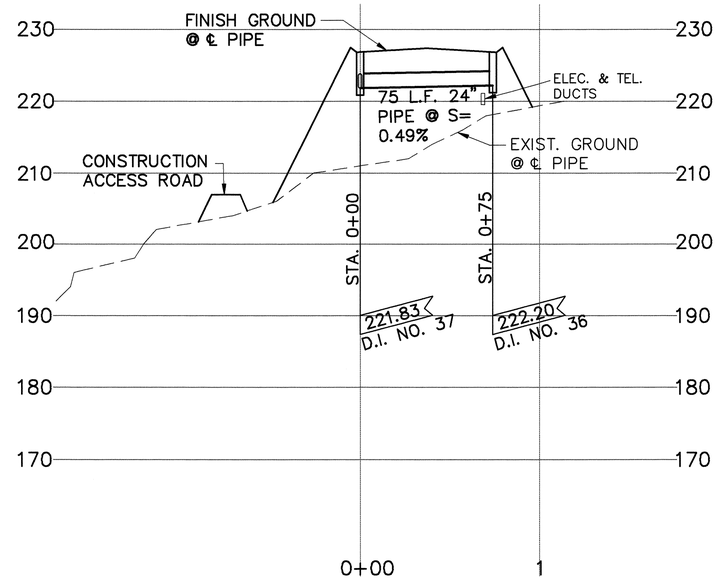

PROFILE - DRAIN LINE "N"
H-3 STA. 404+90

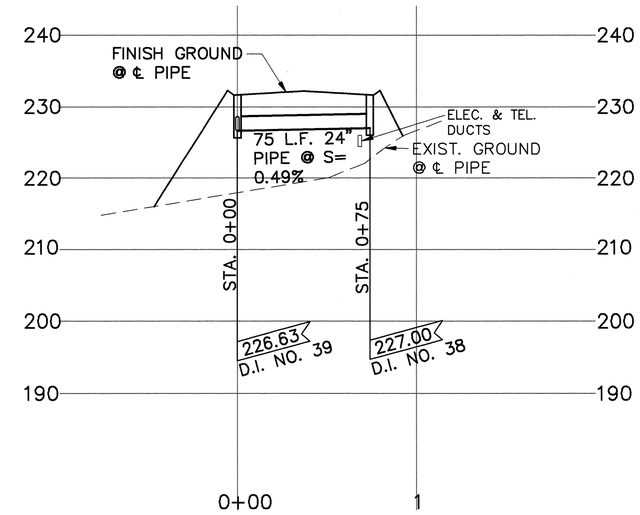

PROFILE - DRAIN LINE "O"
H-3 STA. 406+70

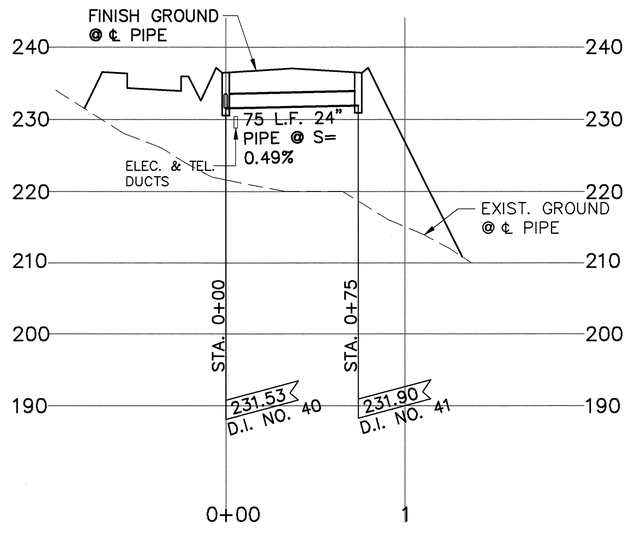

PROFILE - DRAIN LINE "P"
H-3 STA. 408+50

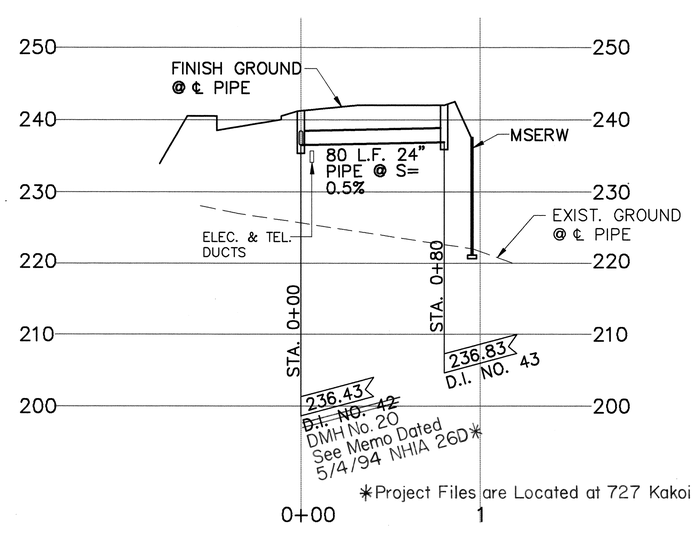

PROFILE - DRAIN LINE "Q"
H-3 STA. 410+30 TO 410+63

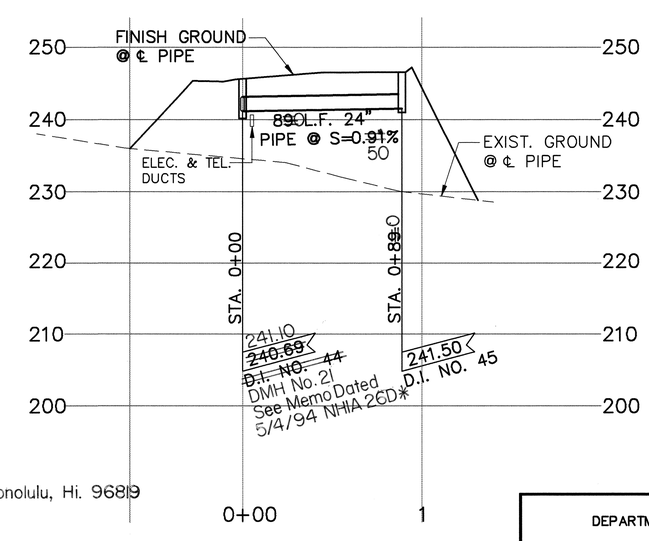

PROFILE - DRAIN LINE "R"
EMERG. RAMP B STA. 2+60 TO H-3 STA. 412+25

*Project Files are Located at 727 Kakoi St. Honolulu, Hi. 96819

SCALE : HORIZ. 1" = 40'
VERT. 1" = 10'

DATE	REVISION
9/30/93	REVISED PROFILE OF DRAIN LINE "R"

REGINALD M SUZUKA
REGISTERED PROFESSIONAL ENGINEER
No. 1462-C
HAWAII, U.S.A.

THIS WORK WAS PREPARED BY ME OR UNDER MY SUPERVISION

PaEn, INC.
dba: PARK ENGINEERING

STATE OF HAWAII
DEPARTMENT OF TRANSPORTATION
HIGHWAYS DIVISION

PROFILES
DRAIN LINES M, N, O, P, Q & R

INTERSTATE ROUTE H-3
F.A.I. PROJECT NO. I-H3-1(59)

SCALE: AS SHOWN DATE: JUNE 1993

SHEET No. D10 OF 32 SHEETS

ADD. 40

ORIGINAL PLAN
NOTEBOOK No.
SURVEY PLOTTED BY
DRAWN BY
TRACED BY
DESIGNED BY
QUANTITIES BY
CHECKED BY
DATE

DRAFR03
PHASE 1A 9/10/93 R50

FED. ROAD DIS. NO.	STATE	FED. AID PROJ. NO.	FISCAL YEAR	SHEET NO.	TOTAL SHEETS
HAWAII	HAW.	I-H3-1(59)	1993	ADD.41	211

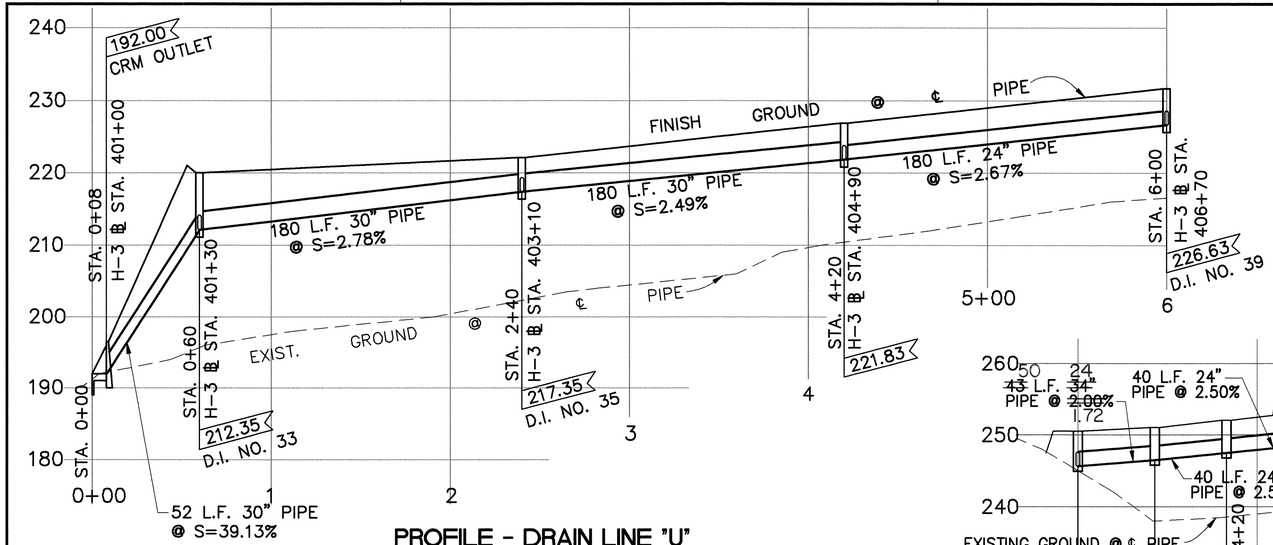

PROFILE - DRAIN LINE "U"

H-3 STA. 401+00 TO
H-3 STA. 406+70

SCALE : HORIZ. 1" = 40'
VERT. 1" = 10'

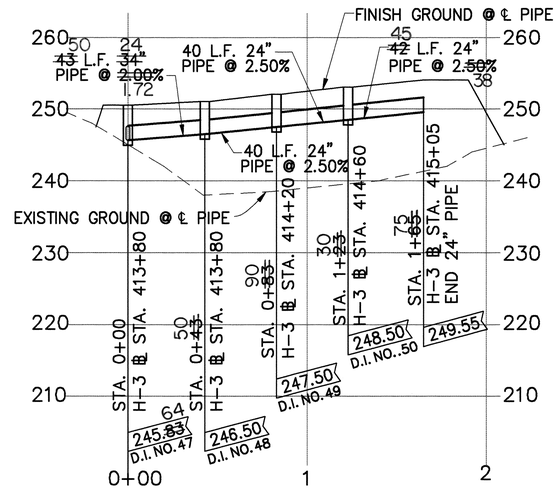

PROFILE - DRAIN LINE "S"

H-3 STA. 413+80 TO H-3 STA. 415+05

SCALE : HORIZ. 1" = 40'
VERT. 1" = 10'

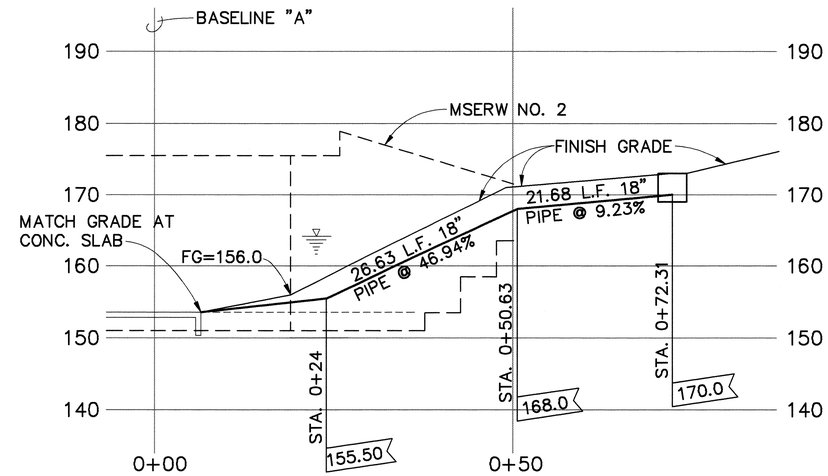

PROFILE-DRAIN LINE "X"

SCALE: HORIZ. 1"= 10'
VERT. 1"= 10'

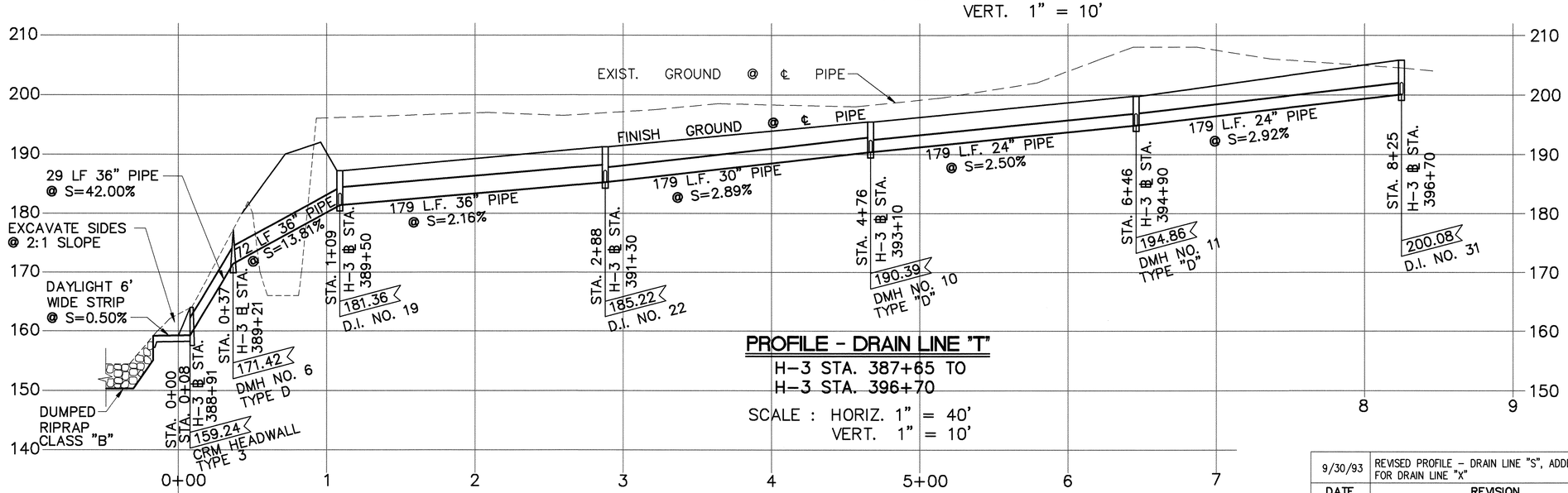

PROFILE - DRAIN LINE "T"

H-3 STA. 387+65 TO
H-3 STA. 396+70

SCALE : HORIZ. 1" = 40'
VERT. 1" = 10'

DATE	REVISION
9/30/93	REVISED PROFILE - DRAIN LINE "S", ADDED PROFILE FOR DRAIN LINE "X"

REGINALD M. SUZUKA
REGISTERED PROFESSIONAL ENGINEER
No. 1462-C
HAWAII, U.S.A.

THIS WORK WAS PREPARED BY ME OR UNDER MY SUPERVISION
PorEn, INC.
dba: PARK ENGINEERING

STATE OF HAWAII
DEPARTMENT OF TRANSPORTATION
HIGHWAYS DIVISION

PROFILES
DRAIN LINES "S", "T" AND "U"

INTERSTATE ROUTE H-3
F.A.I. PROJECT NO. I-H3-1(59)

SCALE: AS SHOWN DATE: JUNE 1993

SHEET No. D11 OF 32 SHEETS

ADD. 41

DRAPROG
PHASE 1A
RE-PACKAGE 9/28/93 RSO

ORIGINAL PLAN | NOTEBOOK | No.
SURVEY PLOTTED BY | DRAWN BY | TRACED BY | DESIGNED BY | QUANTITIES BY | CHECKED BY | DATE

FED. ROAD DIS. NO.	STATE	FED. AID PROJ. NO.	FISCAL YEAR	SHEET NO.	TOTAL SHEETS
HAWAII	HAW.	I-H3-1(59)	1993	ADD.42	211

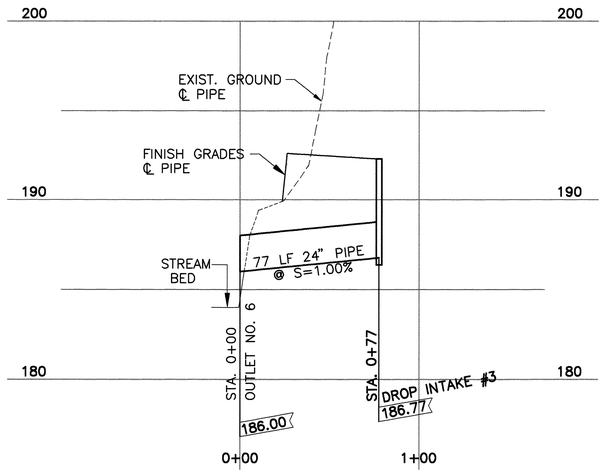

DRAINLINE "A-A"

C.A.R. STA.19+41 TO C.A.R. STA. 18+75
Scale : Horiz. 1"=40'
Vert. 1"=4'

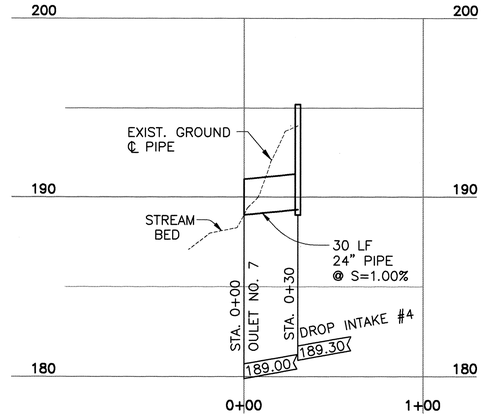

DRAINLINE "B-B"

C.A.R. STA.21+02 TO C.A.R. STA. 21+16
Scale : Horiz. 1"=40'
Vert. 1"=4'

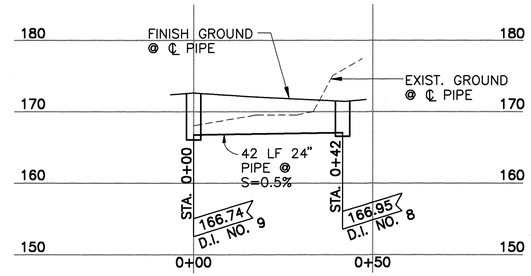

PROFILE - DRAIN LINE "B-3"

H-3 STA. 381+45 TO 381+60
Scale: Horiz. 1"=20'
Vert. 1"=10'

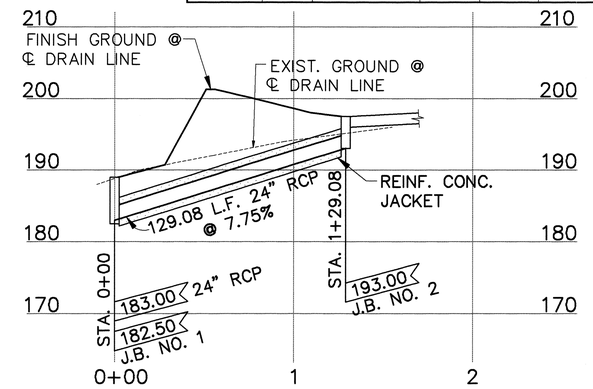

PROFILE - LINED DITCH NO. 2

H-3 STA. 399+65.85 TO H-3 STA. 400+92
SCALE : HORIZ. 1" = 40'
VERT. 1" = 10'

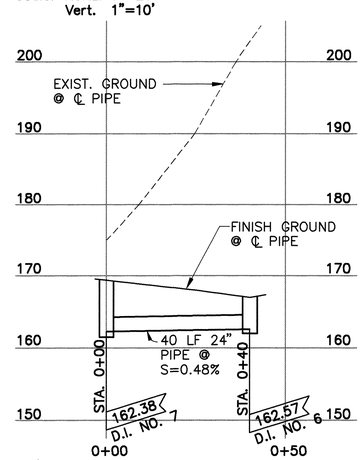

PROFILE - DRAIN LINE "B-2"

H-3 STA. 379+80
Scale: Horiz. 1"=20'
Vert. 1"=10'

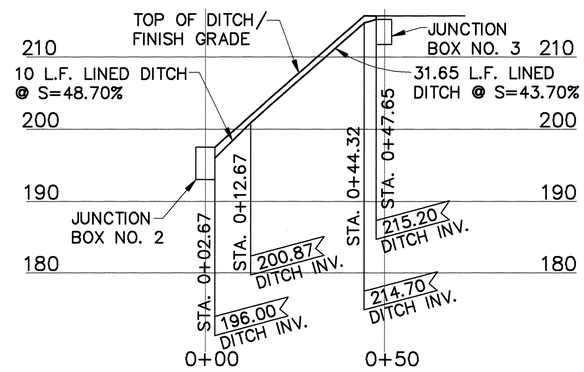

PROFILE - LINED DITCH NO. 3

SCALE : HORIZ. 1" = 20'
VERT. 1" = 10'

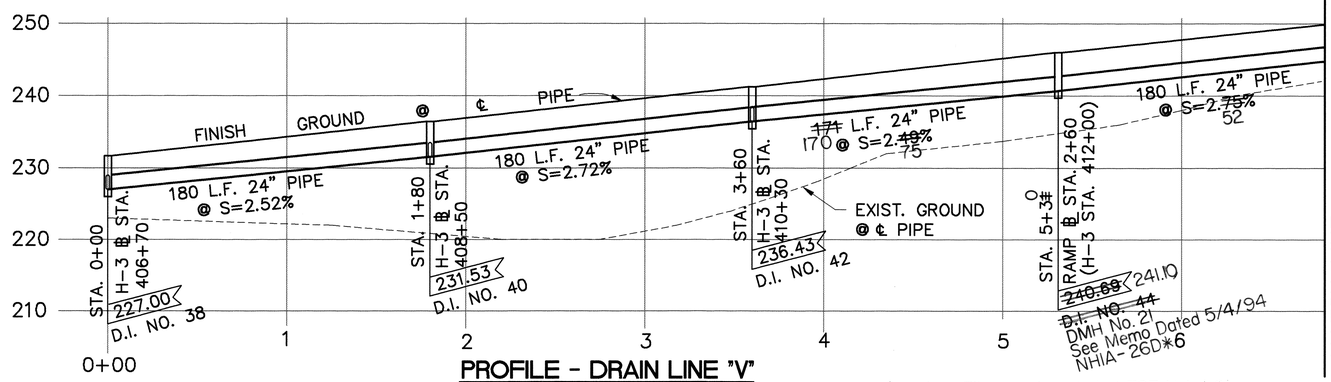

PROFILE - DRAIN LINE "V"

H-3 STA. 406+70 TO H-3 STA. 415+05
SCALE : HORIZ. 1" = 40'
VERT. 1" = 10'

*Project Files are Located at 727 Kakoi St.
Honolulu, Hi. 96819

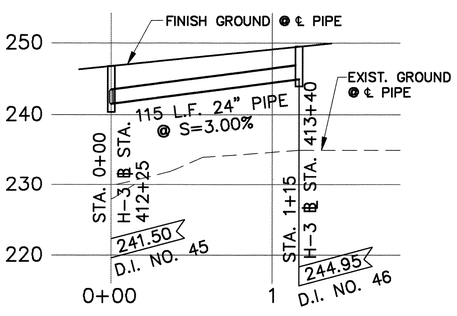

PROFILE - DRAIN LINE "W"

H-3 STA 412+25 TO H-3 STA. 413+40

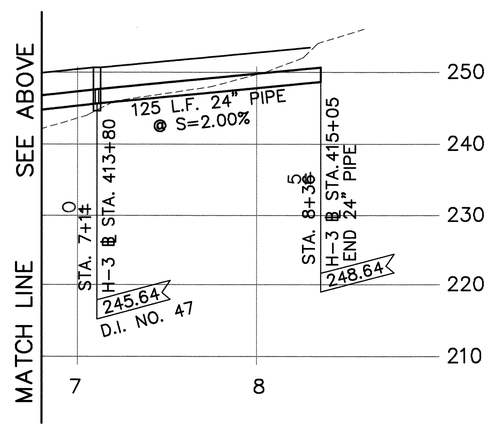

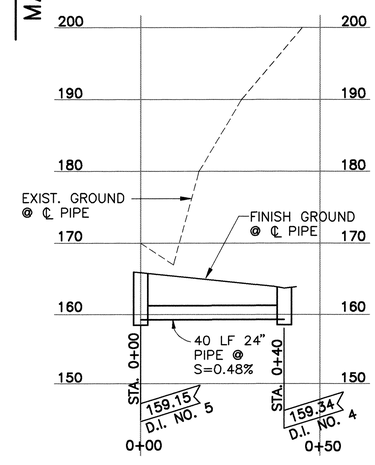

PROFILE - DRAIN LINE "B-1"

H-3 STA. 378+00
Scale: Horiz. 1"=20'
Vert. 1"=10'

DATE	REVISION
9/30/93	REVISED PROFILES-DRAIN LINE "V" AND DRAIN LINE "W"

ORIGINAL PLAN | NOTEBOOK No. | SURVEY PLOTTED BY | DRAWN BY | TRACED BY | DESIGNED BY | QUANTITIES BY | CHECKED BY | DATE

REGINALD M SUZUKA REGISTERED PROFESSIONAL ENGINEER No. 1462-C HAWAII, U.S.A.

DERRICK C. ELFALAN REGISTERED PROFESSIONAL ENGINEER No. 5448-C HAWAII, U.S.A.

THIS WORK WAS PREPARED BY ME OR UNDER MY SUPERVISION
ParEn, Inc. dba PARK ENGINEERING

THIS WORK WAS PREPARED BY ME OR UNDER MY SUPERVISION
ParEn, Inc. dba PARK ENGINEERING

STATE OF HAWAII
DEPARTMENT OF TRANSPORTATION
HIGHWAYS DIVISION

PROFILES - DRAIN LINES "V","W","A-A","B-B","B-1","B-2" AND "B-3" AND LINED DITCH NO. 2 AND 3

INTERSTATE ROUTE H-3
CONSTRUCTION ACCESS ROAD
F.A.I. PROJECT NO. I-H3-1(59)

SCALE: AS SHOWN DATE: JUNE 1993

SHEET No. D12 OF 32 SHEETS

ADD. 42

H3ACRDPF 2/2/93 GHT
PHASE-1A 8/25/93 RSO

FED. ROAD DIS. NO.	STATE	FED. AID PROJ. NO.	FISCAL YEAR	SHEET NO.	TOTAL SHEETS
HAWAII	HAW.	I-H3-1(59)	1993	43	211

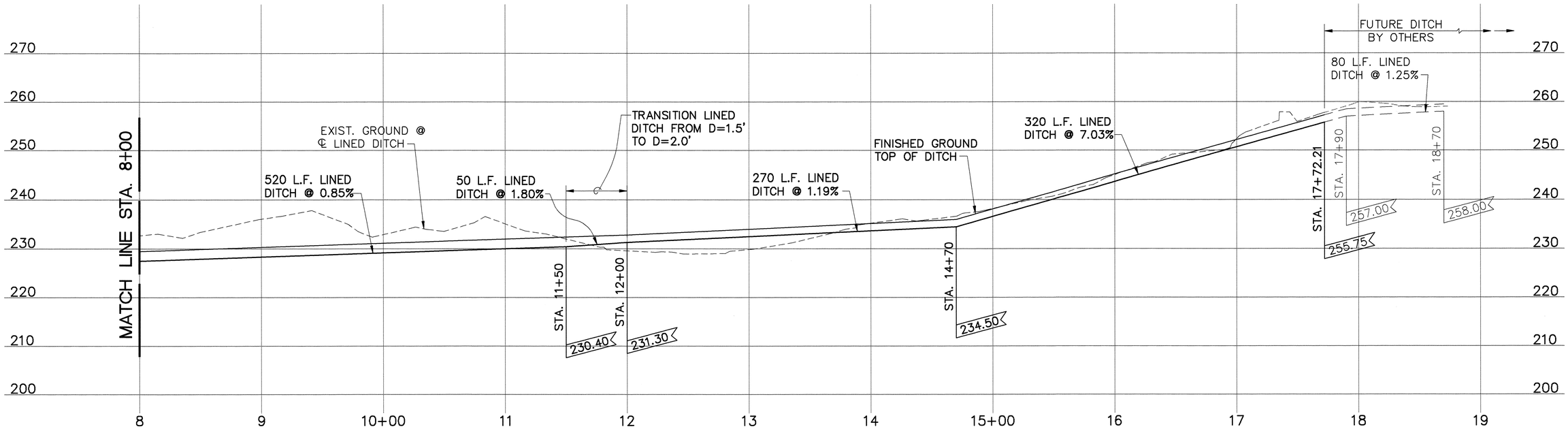

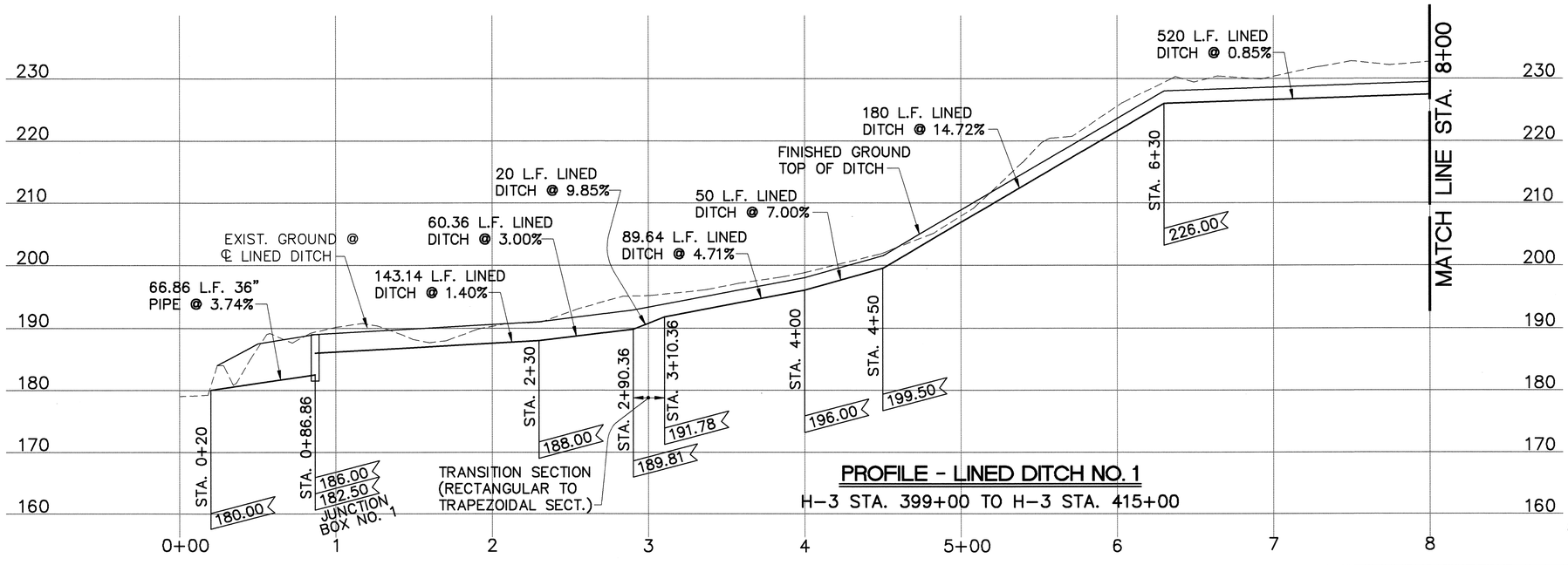

PROFILE - LINED DITCH NO. 1

H-3 STA. 399+00 TO H-3 STA. 415+00

SCALE : HORIZ. 1" = 40'
VERT. 1" = 10'

REGINALD M SUZUKA
REGISTERED PROFESSIONAL ENGINEER
No. 1462-C
HAWAII, U.S.A.

THIS WORK WAS PREPARED BY ME OR UNDER MY SUPERVISION

PerEx, INC.
dba: PARK ENGINEERING

STATE OF HAWAII
DEPARTMENT OF TRANSPORTATION
HIGHWAYS DIVISION

PROFILES

LINED DITCH NO. 1

INTERSTATE ROUTE H-3
F.A.I. PROJECT NO. I-H3-1(59)

SCALE: AS SHOWN DATE: JUNE 1993

SHEET No. D13 OF 31 SHEETS

SURVEY PLOTTED BY
DRAWN BY
TRACED BY
DESIGNED BY
QUANTITIES BY
CHECKED BY
DATE

ORIGINAL PLAN
NOTEBOOK
No.

DRAPRO7 3/12/93 GKI
PHASE 1A RE-PACKAGE

FED. ROAD DIS. NO.	STATE	FED. AID PROJ. NO.	FISCAL YEAR	SHEET NO.	TOTAL SHEETS
HAWAII	HAW.	I-H3-1(59)	1993	44	211

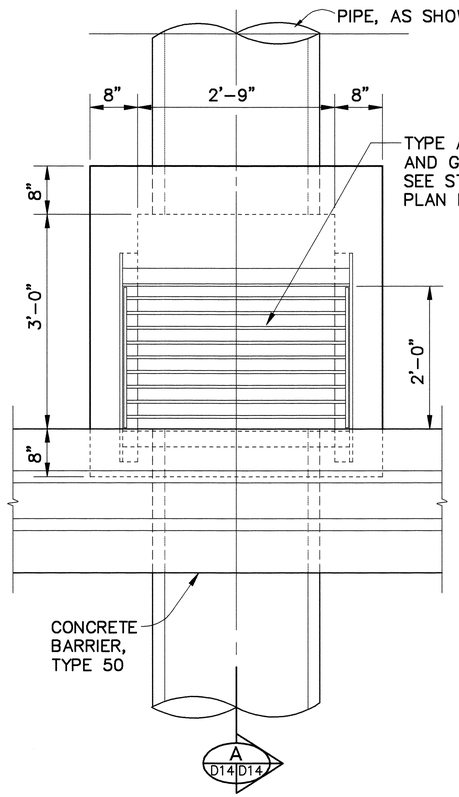

PLAN

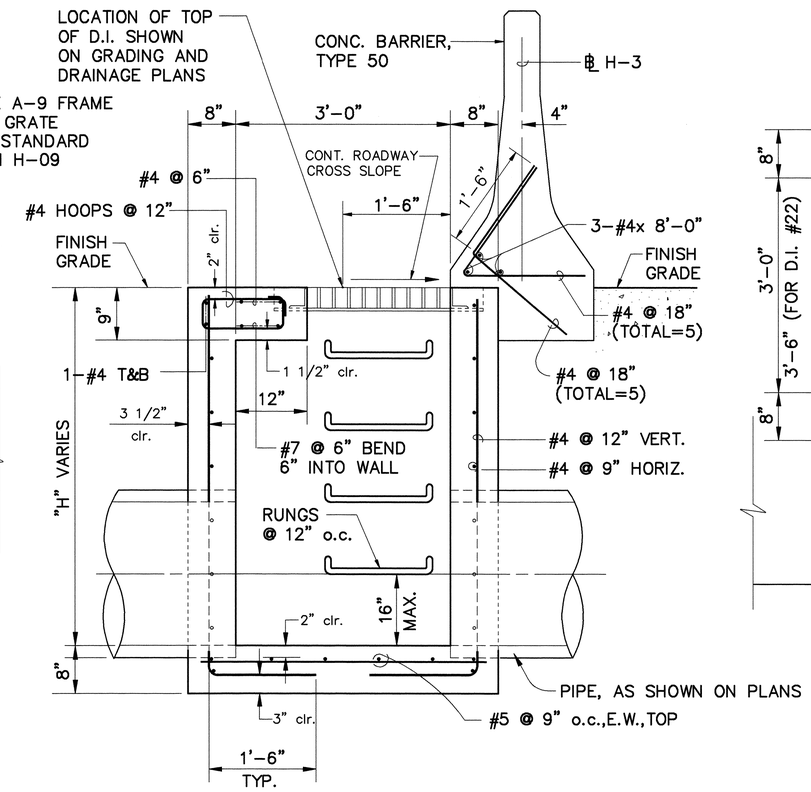

SECTION A D14 D14

TYPE I DRAIN INLET DETAILS

SCALE: 1"= 1'-0"

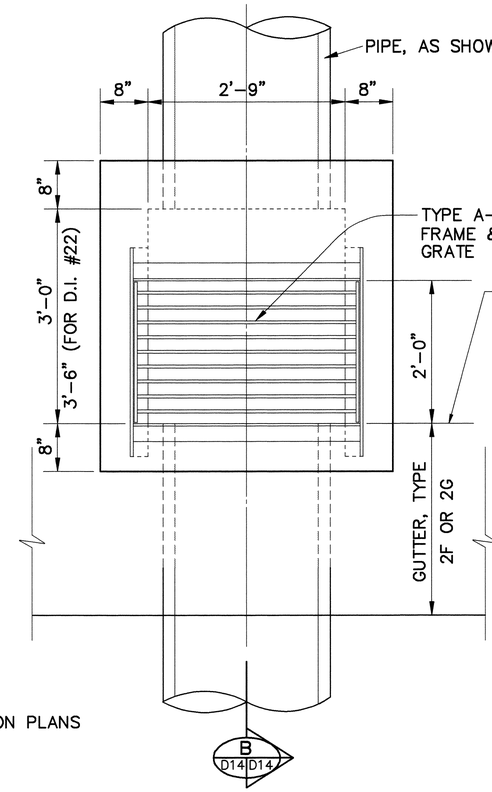

PLAN

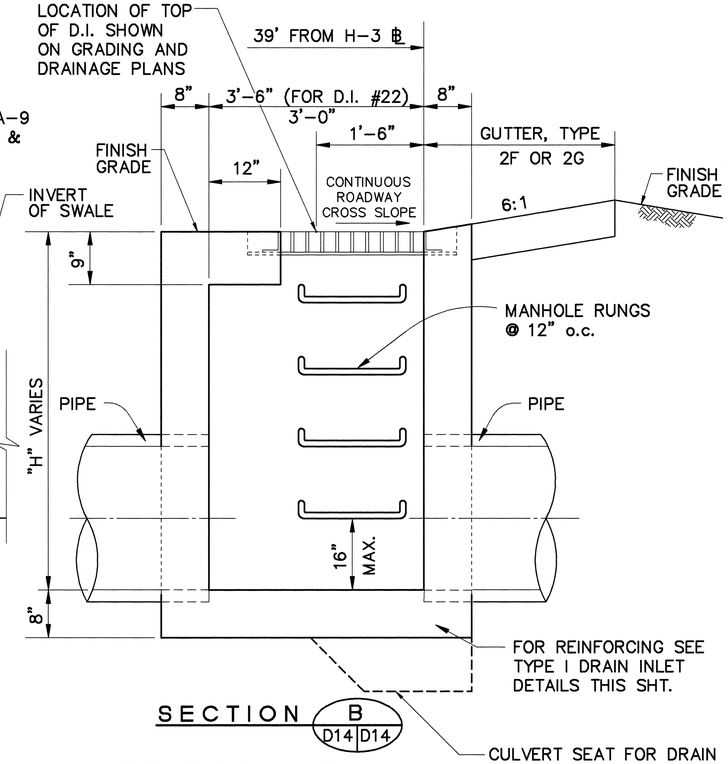

SECTION B D14 D14

TYPE II DRAIN INLET DETAILS

SCALE: 1"= 1'-0"

D.I. NOTES:

1- CONCRETE SHALL BE CLASS "A" CONCRETE.

2- THE CONTRACTOR HAS THE OPTION TO USE RCP OR SPIRAL RIB METAL PIPE UNLESS OTHERWISE NOTED.

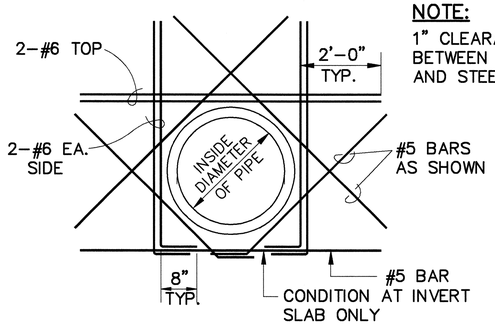

NOTE:
1" CLEARANCE BETWEEN PIPE AND STEEL.

TYPICAL REINFORCEMENT AT PIPES

NOT TO SCALE

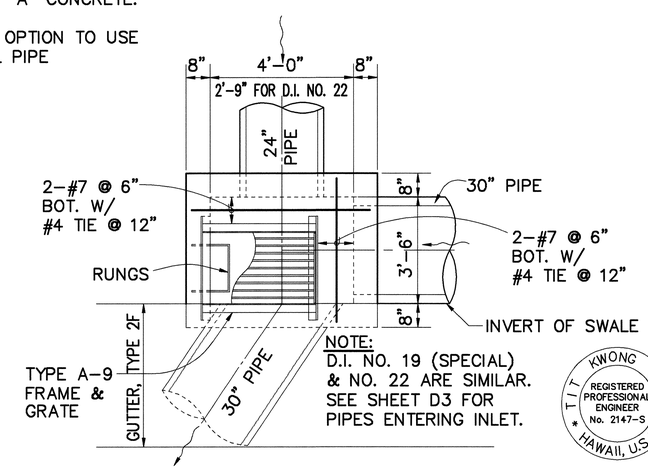

NOTE:
D.I. NO. 19 (SPECIAL) & NO. 22 ARE SIMILAR. SEE SHEET D3 FOR PIPES ENTERING INLET.

PLAN - DRAIN INLET NO. 33 (SPECIAL)

H-3 STA. 401+30

SCALE: 1/2"= 1'-0"

KWONG CHUN TIT REGISTERED PROFESSIONAL ENGINEER No. 2147-S HAWAII, U.S.A.

THIS WORK WAS PREPARED BY ME OR UNDER MY SUPERVISION

***

PARK, INC. dba PARK ENGINEERING

***SIGNATURE HAS BEEN DIGITIZED

STATE OF HAWAII
DEPARTMENT OF TRANSPORTATION
HIGHWAYS DIVISION

DRAINAGE DETAILS

INTERSTATE ROUTE H-3
F.A.I. PROJECT NO. I-H3-1(59)

SCALE: AS NOTED DATE: JUNE 1993

SHEET No. D14 OF D32 SHEETS

ORIGINAL PLAN | NOTEBOOK No. | SURVEY PLOTTED BY | DRAWN BY | TRACED BY | DESIGNED BY | QUANTITIES BY | CHECKED BY | DATE

DRADET1 5/11/93 FMS
PHASE 1A RE-PACKAGE

FED. ROAD DIS. NO.	STATE	FED. AID PROJ. NO.	FISCAL YEAR	SHEET NO.	TOTAL SHEETS
HAWAII	HAW.	I-H3-1(59)	1993	45	211

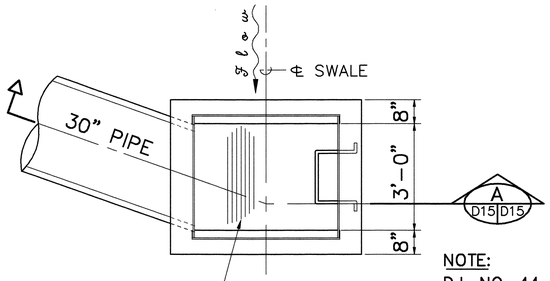

NOTE:
D.I. NO. 44 AT RAMP STA. 2+60 IS SIMILAR.

PLAN

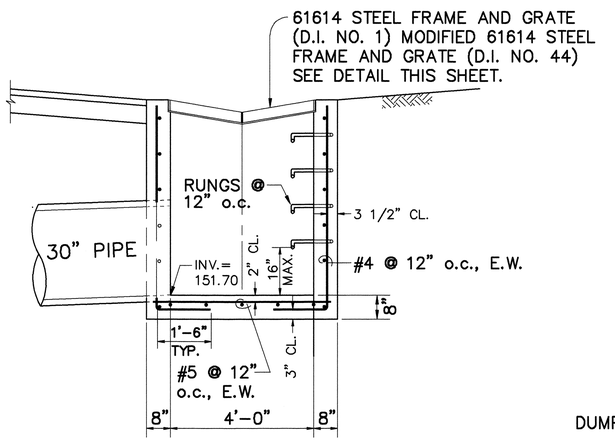

SECTION A D15 D15

DRAIN INLET NO. 1
(SPECIAL)
H-3 ₿ STA. 376+20, RT.
SCALE: 1/2"= 1'-0"

NOTES FOR GRATING AND FRAME
1. ALL CONNECTIONS SHALL BE WELDED.
2. HOT DIP GALVANIZE ENTIRE ASSEMBLY AFTER FABRICATION.

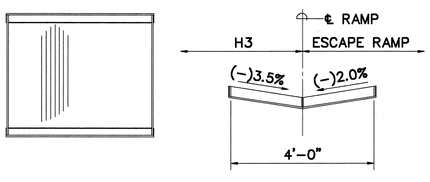

PLAN SECTION

MODIFIED 6164 FRAME AND GRATE
NOT TO SCALE

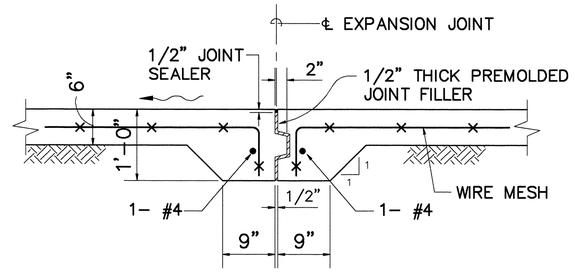

EXPANSION JOINT AT LINED DITCH
(MAX. SPACING 96'-0" o.c.)
SCALE: 1"= 1'-0"

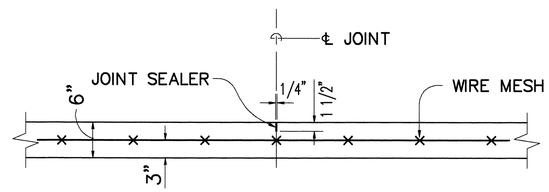

CONTROL JOINT AT LINED DITCH
(MAX. SPACING 32'-0" o.c.)
SCALE: 1"= 1'-0"

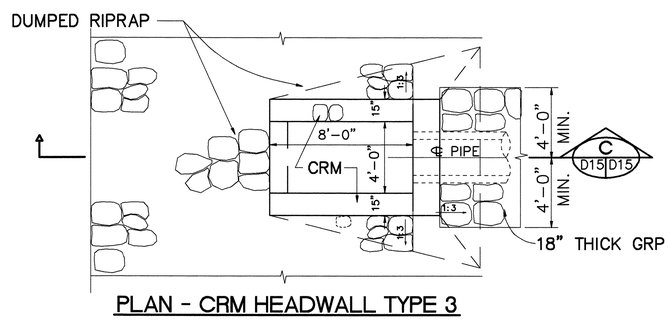

PLAN - CRM HEADWALL TYPE 3

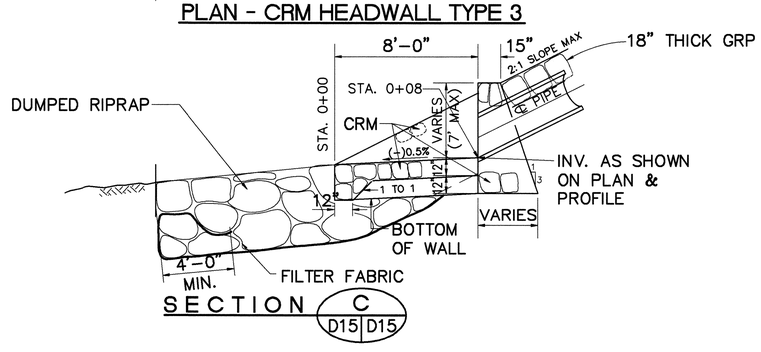

SECTION C D15 D15

CRM HEADWALL - TYPE 3
DRAIN OUTLET NOS. 3 AND 5
SCALE: 1/4"= 1'-0"

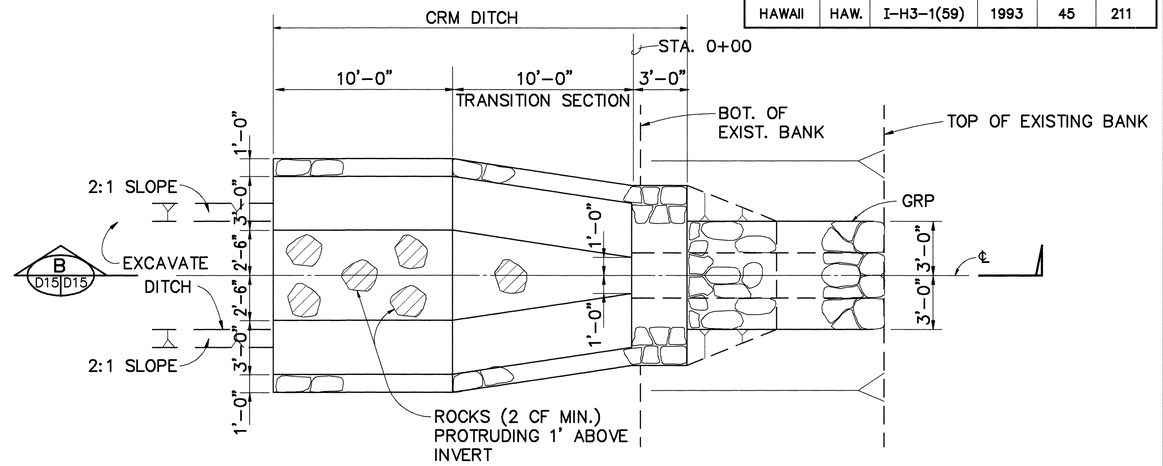

PLAN

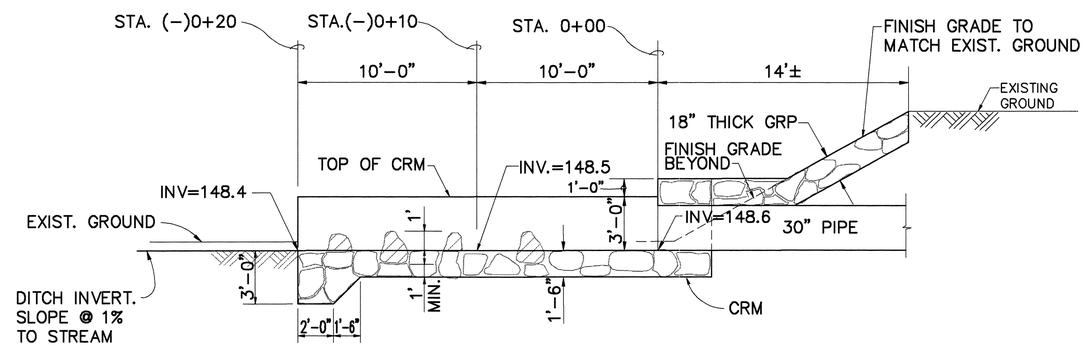

SECTION B D15 D15

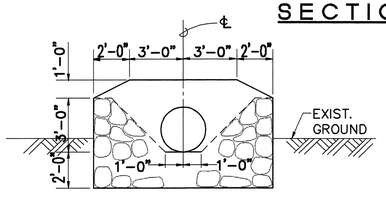

STATION 0+00

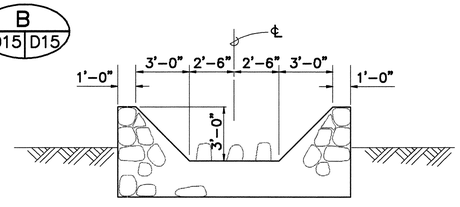

STATION (-)0+10 TO (-)0+20

DRAIN OUTLET NO. 1
SCALE: 1/4"= 1'-0"

REGINALD M SUZUKA REGISTERED PROFESSIONAL ENGINEER No. 1462-C HAWAII, U.S.A.
THIS WORK WAS PREPARED BY ME OR UNDER MY SUPERVISION
PorEk, Inc. dba PARK ENGINEERING

TIT KWONG CHUN REGISTERED PROFESSIONAL ENGINEER No. 2147-S HAWAII, U.S.A.
THIS WORK WAS PREPARED BY ME OR UNDER MY SUPERVISION
PorEk, Inc. dba PARK ENGINEERING

*** SIGNATURE HAS BEEN DIGITIZED

STATE OF HAWAII
DEPARTMENT OF TRANSPORTATION
HIGHWAYS DIVISION

DRAINAGE DETAILS

INTERSTATE ROUTE H-3
F.A.I. PROJECT NO. I-H3-1(59)

SCALE: AS NOTED DATE: JUNE 1993

SHEET No. D15 OF 32 SHEETS

ORIGINAL PLAN | NOTEBOOK No. | SURVEY PLOTTED BY | DRAWN BY | TRACED BY | DESIGNED BY | QUANTITIES BY | CHECKED BY | DATE

DRADET2 3/29/93 RSO
PHASE 1A 5/14/93 FMS

FED. ROAD DIS. NO.	STATE	FED. AID PROJ. NO.	FISCAL YEAR	SHEET NO.	TOTAL SHEETS
HAWAII	HAW.	I-H3-1(59)	1993	46	211

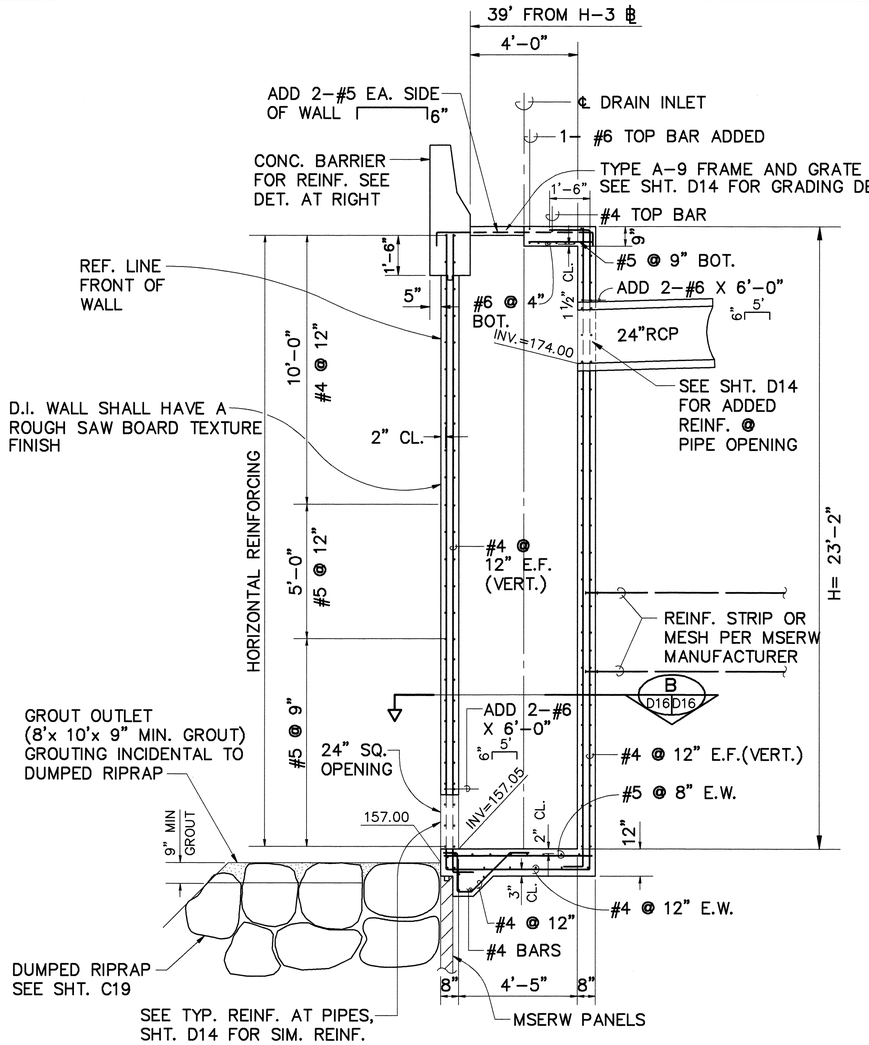

SECTION A D16 D16

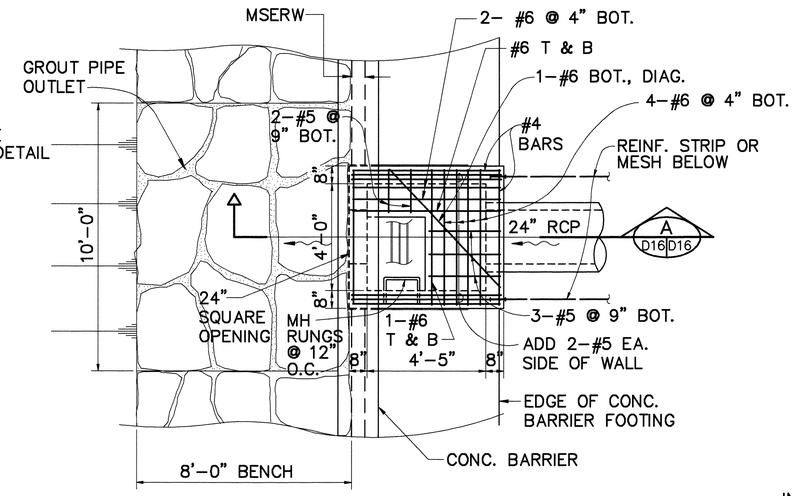

PLAN

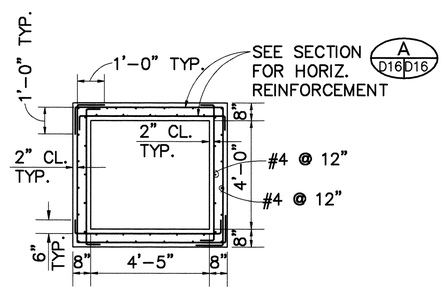

SECTION B D16 D16

DETAIL - DRAIN INTAKE NO. 13 (SPECIAL)

AT H-3 STA. 385+90 (SHT. D2)

SCALE: 3/8"= 1'-0"

NOTE: PROVIDE SHOP DRAWINGS FOR CONNECTION BETWEEN MSERW AND D.I.

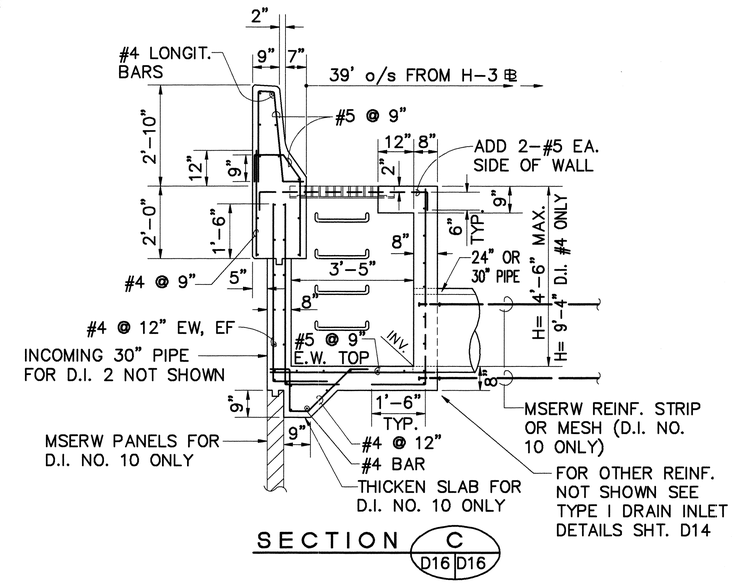

SECTION C D16 D16

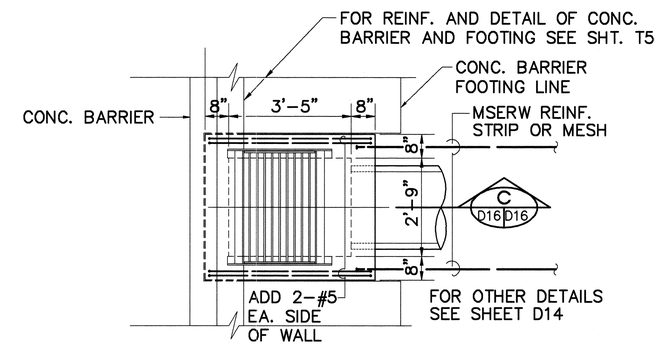

PLAN - D. I. NEXT TO CONC. BARRIER AND MSERW (D.I. NOS. 2, 4, 6, 8 AND NO. 10)

SCALE : 1/2"= 1'-0"

ORIGINAL PLAN	SURVEY PLOTTED BY	DATE
	DRAWN BY	
NOTEBOOK	TRACED BY	
	DESIGNED BY	
No.	QUANTITIES BY	
	CHECKED BY	

T. T. KWONG CHUN
REGISTERED PROFESSIONAL ENGINEER No. 2147-S
HAWAII, U.S.A.

THIS WORK WAS PREPARED BY ME OR UNDER MY SUPERVISION

PacEn, Inc. dba PARK ENGINEERING

*** SIGNATURE HAS BEEN DIGITIZED

STATE OF HAWAII
DEPARTMENT OF TRANSPORTATION
HIGHWAYS DIVISION

DRAINAGE DETAILS

INTERSTATE ROUTE H-3
F.A.I. PROJECT NO. I-H3-1(59)

SCALE: AS SHOWN DATE: JUNE 1993

SHEET No. D16 OF 32 SHEETS

DRADET4 4/21/92 AMM
PHASE 1A 5/11/93 FMS
5/17/93 FMS

FED. ROAD DIS. NO.	STATE	FED. AID PROJ. NO.	FISCAL YEAR	SHEET NO.	TOTAL SHEETS
HAWAII	HAW.	I-H3-1(59)	1993	47	211

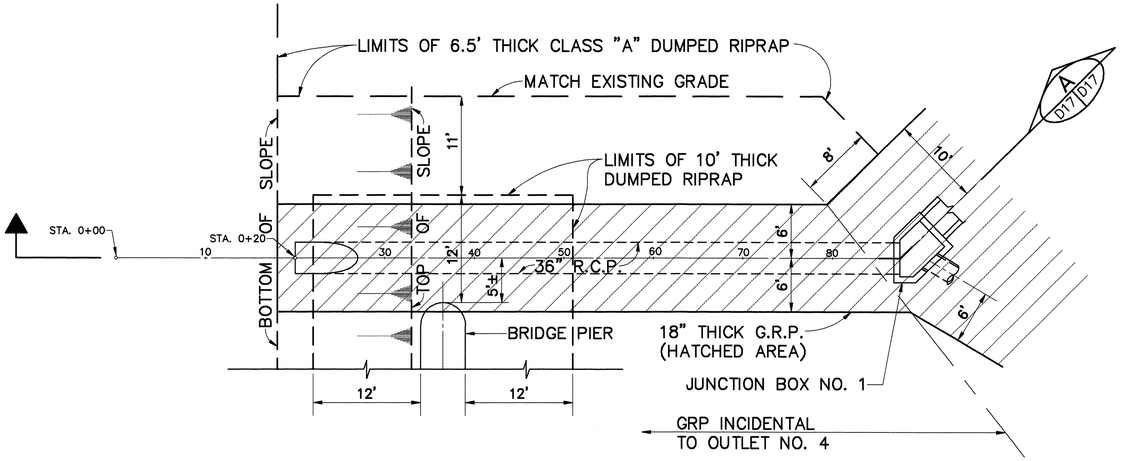

PLAN - OUTLET NO. 4

SCALE: 1/8"= 1'-0"

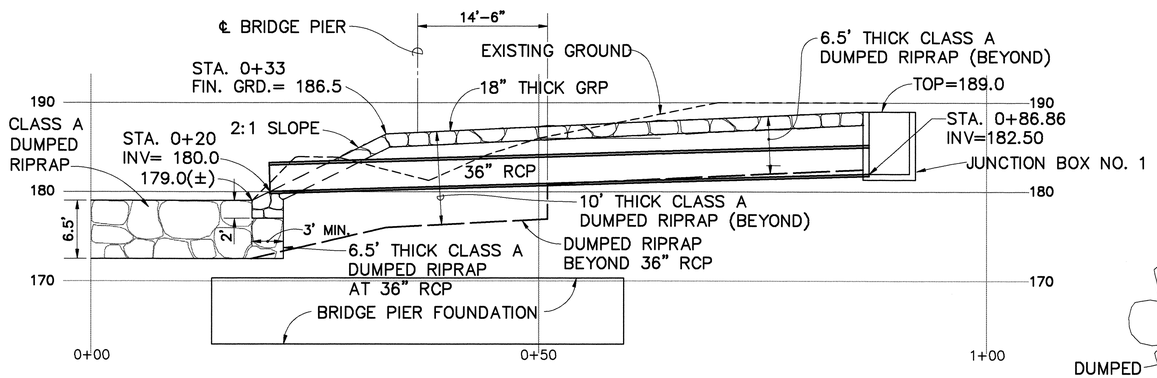

SECTION A D17 D17

SCALE: 1"=8'-0"

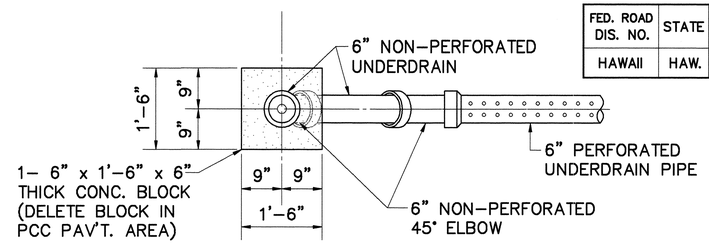

PLAN

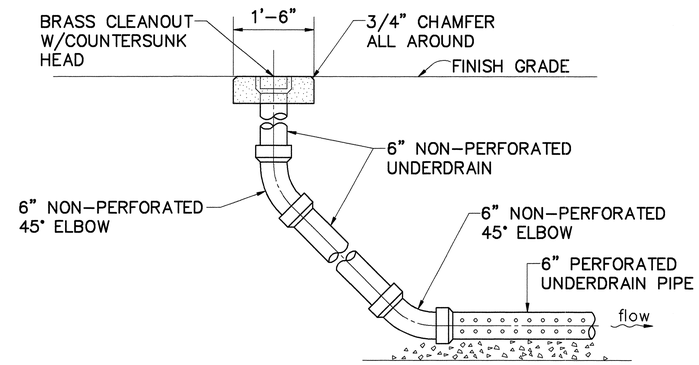

TYPICAL CLEANOUT DETAIL

SCALE: 3/4"= 1'-0"

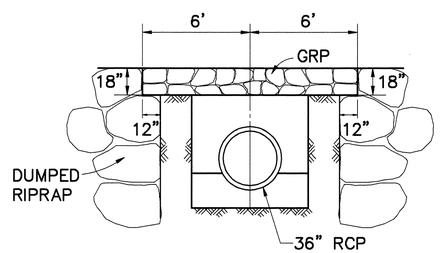

TYPICAL SECTION

SCALE: 1"= 4'-0"

NOTE:

EMBANKMENT AND DUMPED RIPRAP SHALL BE CONSTRUCTED IN THE FOLLOWING SEQUENCE:

a. EMBANKMENT ①
b. DUMPED RIPRAP
C. EMBANKMENT ②

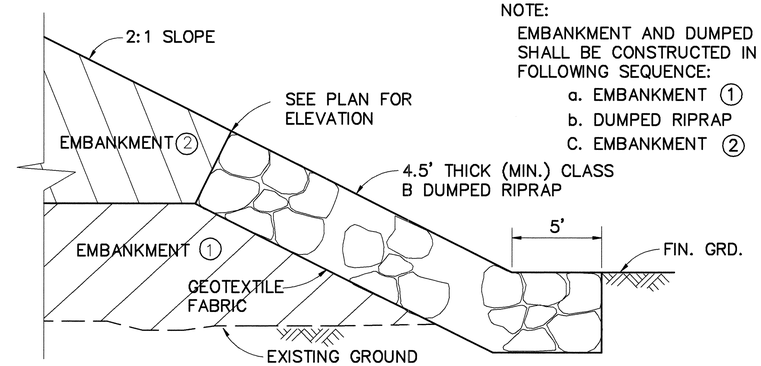

TYPICAL SECTION DUMPED RIPRAP FOR SLOPE PROTECTION

SCALE: 1"= 4'-0"

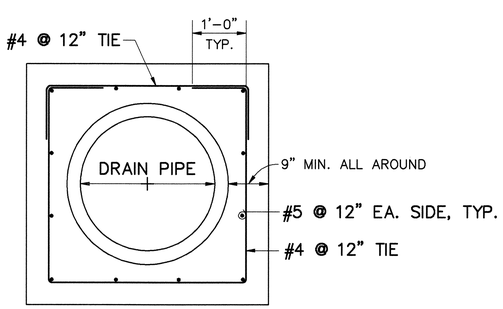

CONC. JACKET FOR PIPE

SCALE: 3/4"= 1'-0"

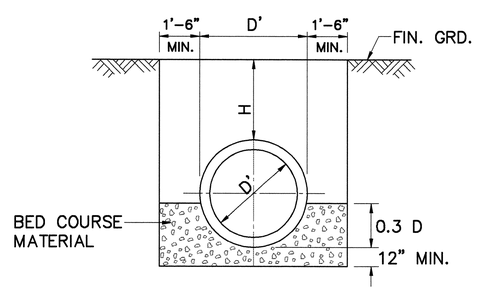

TYP. TRENCH FOR DRAIN PIPES

SCALE: 3/4"= 1'-0"

ORIGINAL PLAN	NOTEBOOK	No.

SURVEY PLOTTED BY
DRAWN BY
TRACED BY
DESIGNED BY
QUANTITIES BY
CHECKED BY
DATE

REGINALD M. SUZUKA
REGISTERED PROFESSIONAL ENGINEER
No. 1462-C
HAWAII, U.S.A.

THIS WORK WAS PREPARED BY ME OR UNDER MY SUPERVISION

PUTER, INC.
dba: PARK ENGINEERING

DEPARTMENT OF TRANSPORTATION

DRAINAGE DETAILS

INTERSTATE ROUTE H-3
F.A.I. PROJECT NO. I-H3-1(59)

SCALE: AS NOTED DATE: JUNE 1993

SHEET No. D17 OF 32 SHEETS

OUTLET4 2/1/93 GHT
PHASE 1A 6/22/93
RE-PACKAGE

FED. ROAD DIS. NO.	STATE	FED. AID PROJ. NO.	FISCAL YEAR	SHEET NO.	TOTAL SHEETS
HAWAII	HAW.	I-H3-1(59)	1993	ADD. 47S-1	211

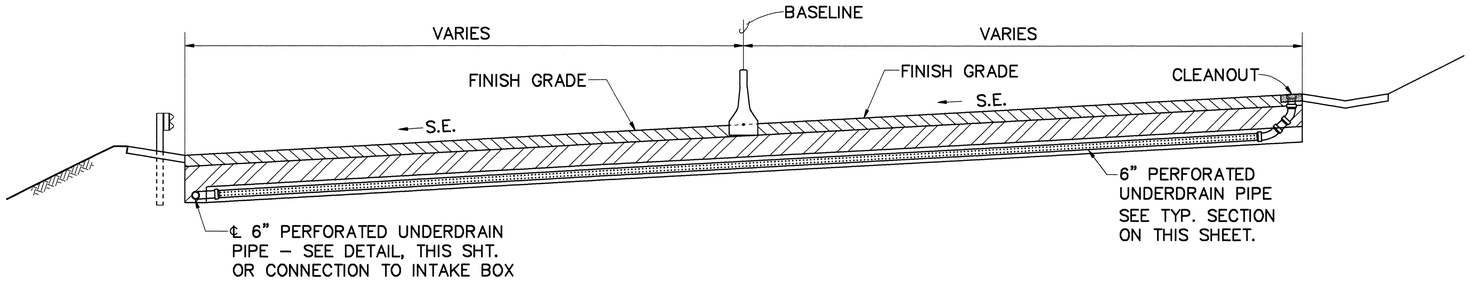

TYPICAL SECTION - CROSS DRAIN INTERCEPTER

SCALE: 1"= 5'-0"

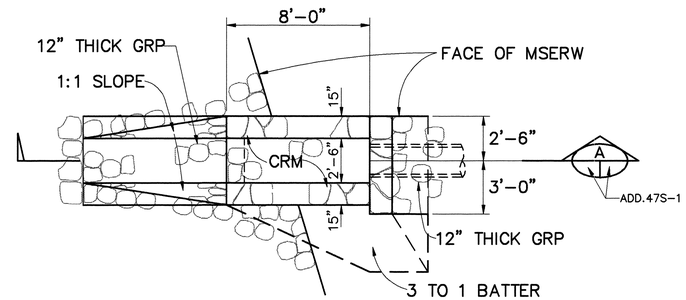

PLAN - DRAIN OUTLET NO. 8

SCALE: 1/4"= 1'-0"

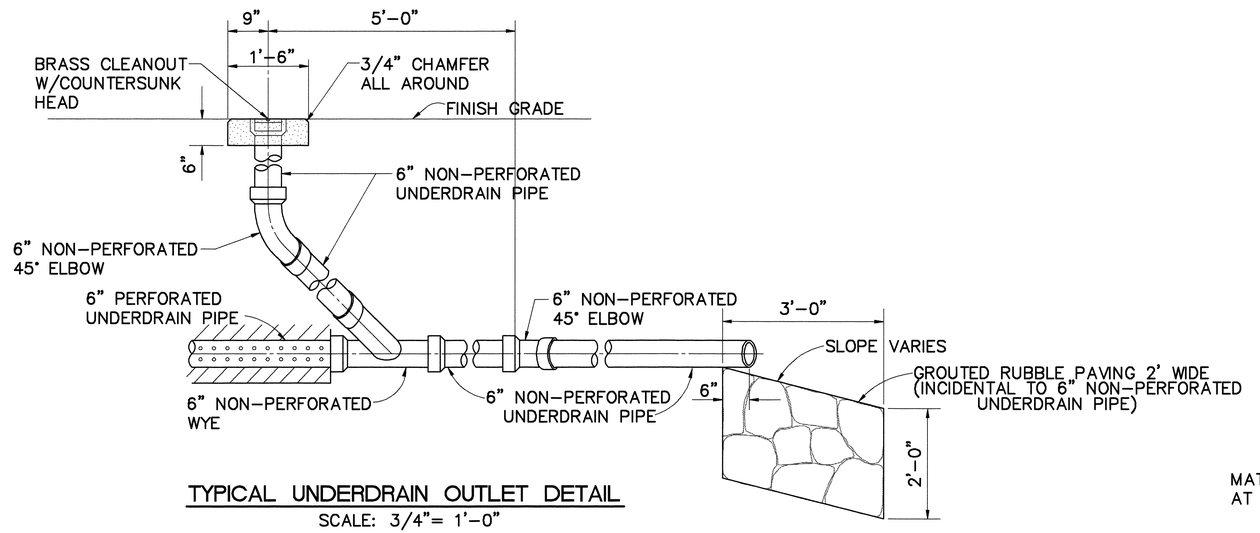

TYPICAL UNDERDRAIN OUTLET DETAIL

SCALE: 3/4"= 1'-0"

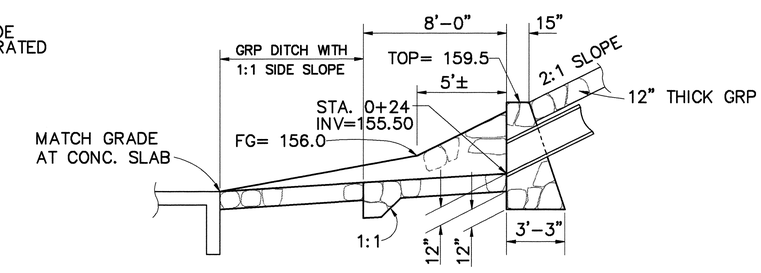

SECTION A

SCALE: 1/4"= 1'-0"

ADD.47S-1

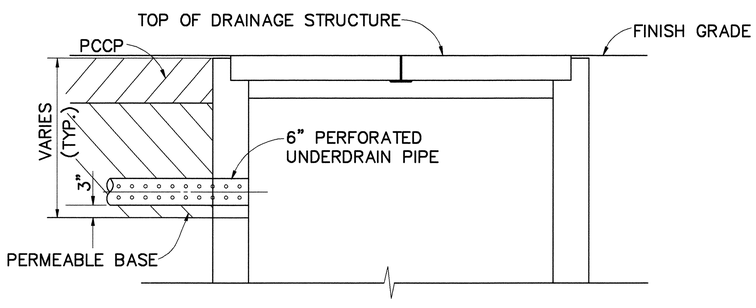

CONNECTION OF UNDERDRAIN TO DRAINAGE STRUCTURE

SCALE: 3/4"= 1'-0"

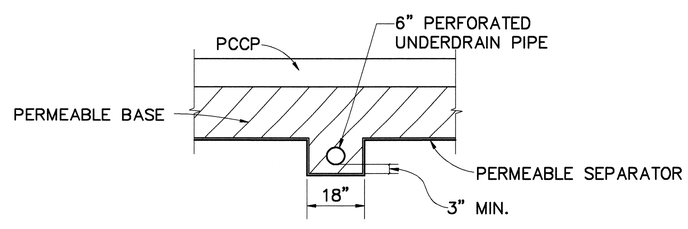

TYPICAL SECTION FOR UNDERDRAIN

SCALE: 1/2"= 1'-0"

REGINALD M. SUZUKA
REGISTERED PROFESSIONAL ENGINEER
No. 1462-C
HAWAII, U.S.A.

THIS WORK WAS PREPARED BY ME OR UNDER MY SUPERVISION

Reginald M. Suzuka

Perfin, Inc.
dba: PARK ENGINEERING

DATE	REVISION
9/30/93	ADDED NEW SHEET FOR ADDITIONAL UNDERDRAINS AND DRAINAGE DETAILS

STATE OF HAWAII
DEPARTMENT OF TRANSPORTATION
HIGHWAYS DIVISION

DRAINAGE DETAILS

INTERSTATE ROUTE H-3
F.A.I. PROJECT NO. I-H3-1(59)

SCALE: AS NOTED DATE: JUNE 1993

SHEET No. D17A OF 32 SHEETS

ADD. 47S-1

ORIGINAL PLAN | NOTEBOOK | No.
SURVEY PLOTTED BY | DRAWN BY | TRACED BY | DESIGNED BY | QUANTITIES BY | CHECKED BY | DATE

ADD47S-1 9/28/93 RSO
PHASE 1A
RE-PACKAGE

FED. ROAD DIS. NO.	STATE	FED. AID PROJ. NO.	FISCAL YEAR	SHEET NO.	TOTAL SHEETS
HAWAII	HAW.	I-H3-1(59)	1993	48	211

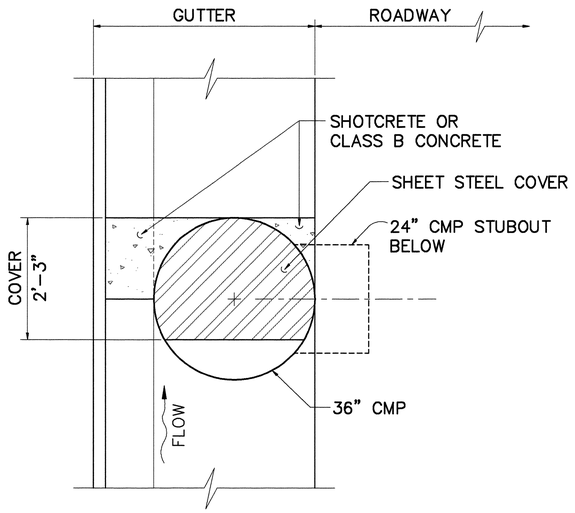

PLAN - DROP INTAKE - TYPE "A"

SCALE: 3/4" = 1'-0"

TABLE OF ESTIMATED LIMITS OF SHOTCRETE DRAINAGE DITCHES FOR TYPE II ROADWAY SECTION		
	LEFT EDGE	RIGHT EDGE
	20+95 – 21+25 23+25 – 25+00 31+50 – 32+00 34+50 – 35+50	27+50 – 29+50

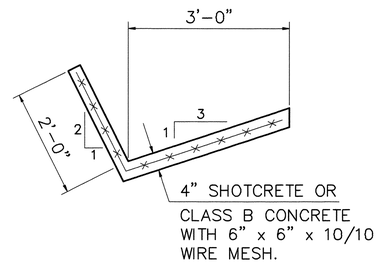

DRAINAGE DITCH TYPE A DETAIL

SCALE 3/4" = 1'-0"

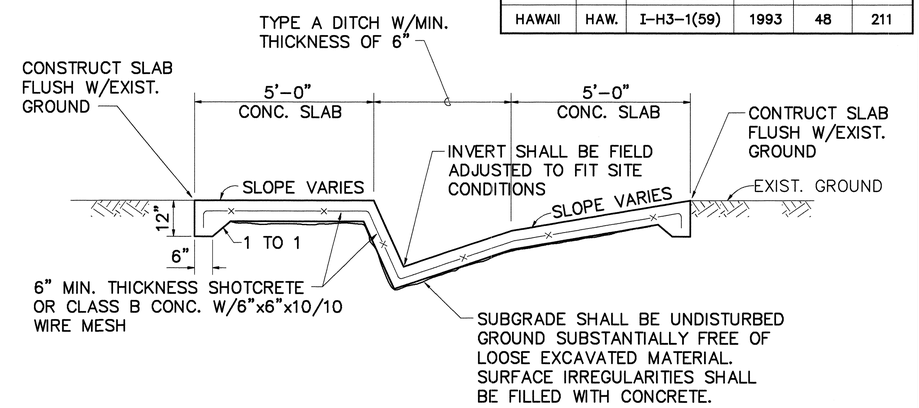

DETAIL B (D4 | D18)

SCALE: 1/2" = 1'-0"

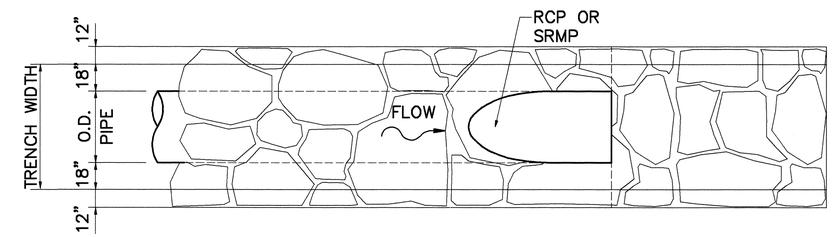

PLAN

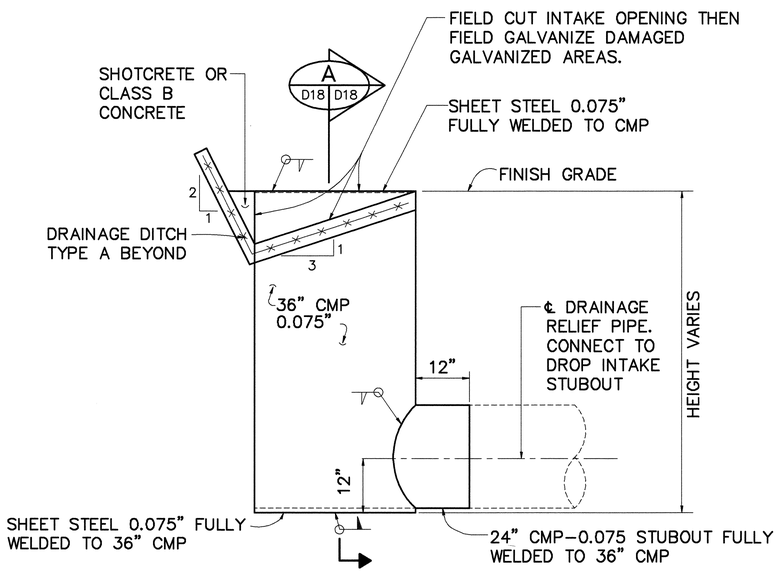

SECTION - DROP INTAKE - TYPE "A"

SCALE: 3/4" = 1'-0"

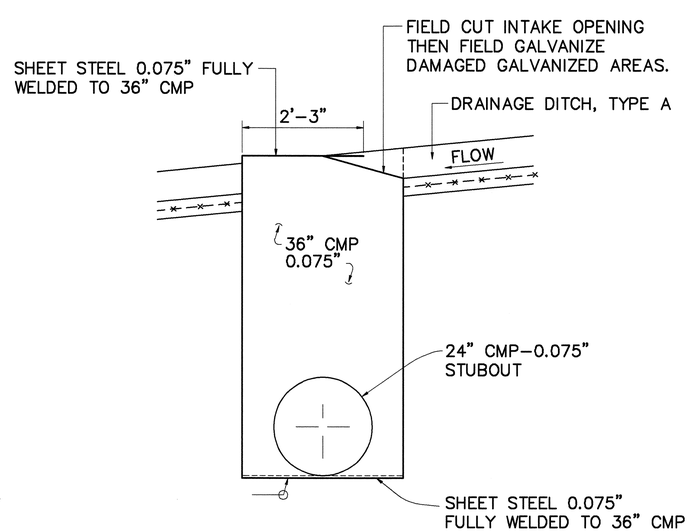

SECTION A (D19 | D19)

SCALE: 3/4"=1'-0"

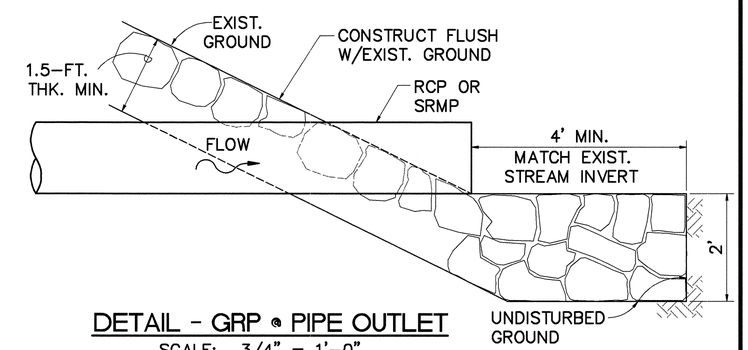

DETAIL - GRP @ PIPE OUTLET

SCALE: 3/4" = 1'-0"

REGINALD M. SUZUKA — REGISTERED PROFESSIONAL ENGINEER No. 1462-C — HAWAII, U.S.A.

THIS WORK WAS PREPARED BY ME OR UNDER MY SUPERVISION

PorEn, Inc. dba PARK ENGINEERING

DERRICK C. ELFALAN — REGISTERED PROFESSIONAL ENGINEER No. 5448-C — HAWAII, U.S.A.

THIS WORK WAS PREPARED BY ME OR UNDER MY SUPERVISION

PorEn, Inc. dba: PARK ENGINEERING

STATE OF HAWAII
DEPARTMENT OF TRANSPORTATION
HIGHWAYS DIVISION

DRAINAGE DETAILS

CONSTRUCTION ACCESS ROAD
F.A.I. PROJECT NO. I-H3-1(59)

SCALE: AS SHOWN DATE: JUNE 1993

SHEET No. D18 OF 32 SHEETS

ORIGINAL PLAN	SURVEY PLOTTED BY	DATE
	DRAWN BY	
	TRACED BY	
NOTEBOOK	DESIGNED BY	
	QUANTITIES BY	
No.	CHECKED BY	

H3ACCD4 4/08/92 GKI
PHASE-1A 2/2/93 GHT

FED. ROAD DIS. NO.	STATE	FED. AID PROJ. NO.	FISCAL YEAR	SHEET NO.	TOTAL SHEETS
HAWAII	HAW.	I-H3-1(68)	1993	49	211

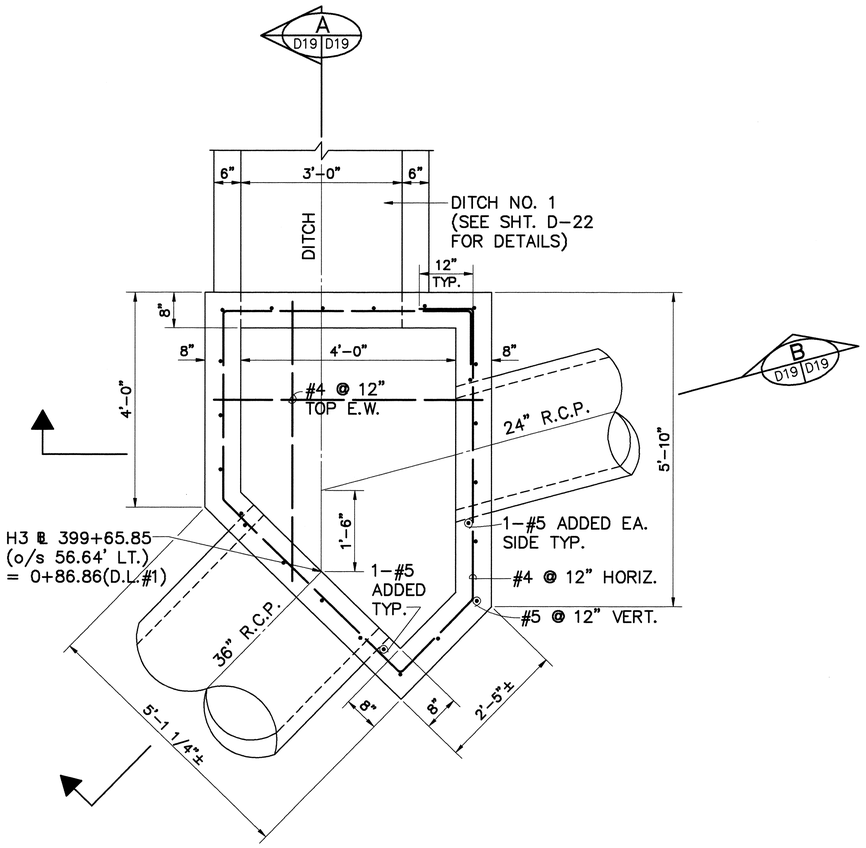

PLAN

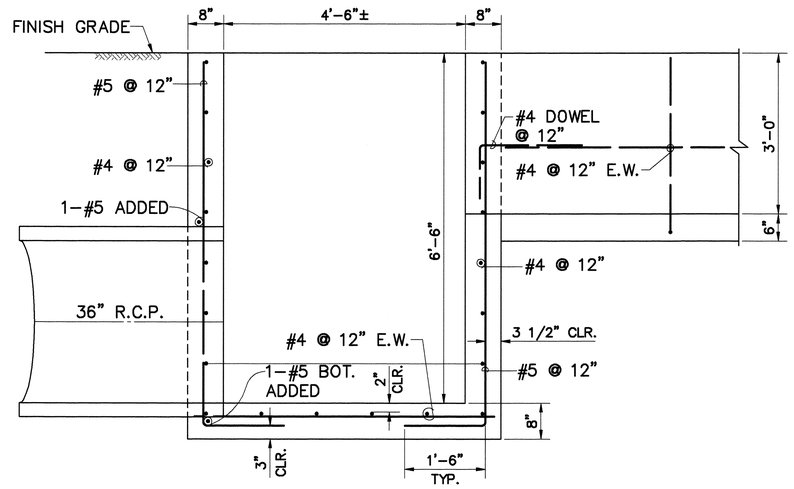

SECTION A D19 D19

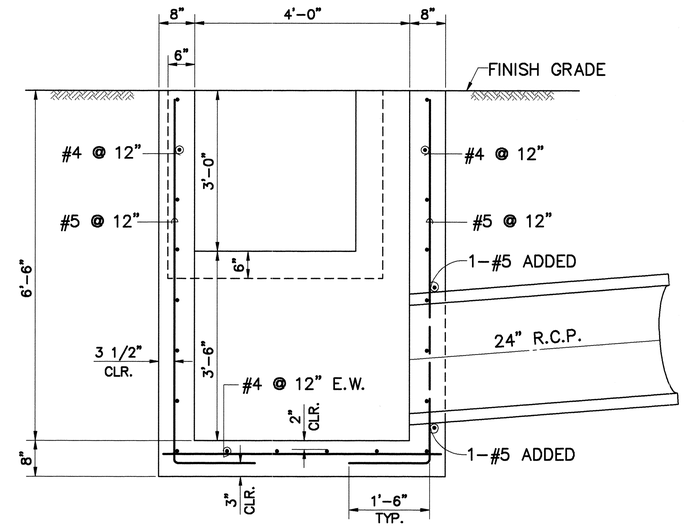

SECTION B D19 D19

JUNCTION BOX NO. 1

SCALE: 3/4"= 1'-0"

ORIGINAL PLAN	SURVEY PLOTTED BY	DATE
	DRAWN BY	
	TRACED BY	
NOTEBOOK	DESIGNED BY	
	QUANTITIES BY	
No.	CHECKED BY	

KWONG CHUN TIT
REGISTERED PROFESSIONAL ENGINEER
No. 2147-S
HAWAII, U.S.A.

THIS WORK WAS PREPARED BY ME OR UNDER MY SUPERVISION

***

Pogan, Inc.
dba: PARK ENGINEERING

REGINALD M. SUZUKA
REGISTERED PROFESSIONAL ENGINEER
No. 1462-C
HAWAII, U.S.A.

THIS WORK WAS PREPARED BY ME OR UNDER MY SUPERVISION

Pogan, Inc.
dba: PARK ENGINEERING

*** SIGNATURE HAS BEEN DIGITIZED

STATE OF HAWAII
DEPARTMENT OF TRANSPORTATION
HIGHWAYS DIVISION

DRAINAGE DETAILS

INTERSTATE ROUTE H-3
F.A.I. PROJECT NO. I-H3-1(59)

SCALE: AS SHOWN DATE: JUNE 1993

SHEET No. D19 OF 32 SHEETS

JUNCBOX1 6/21/93 GHT
PHASE 1A

FED. ROAD DIS. NO.	STATE	FED. AID PROJ. NO.	FISCAL YEAR	SHEET NO.	TOTAL SHEETS
HAWAII	HAW.	I-H3-1(68)	1993	ADD.50	211

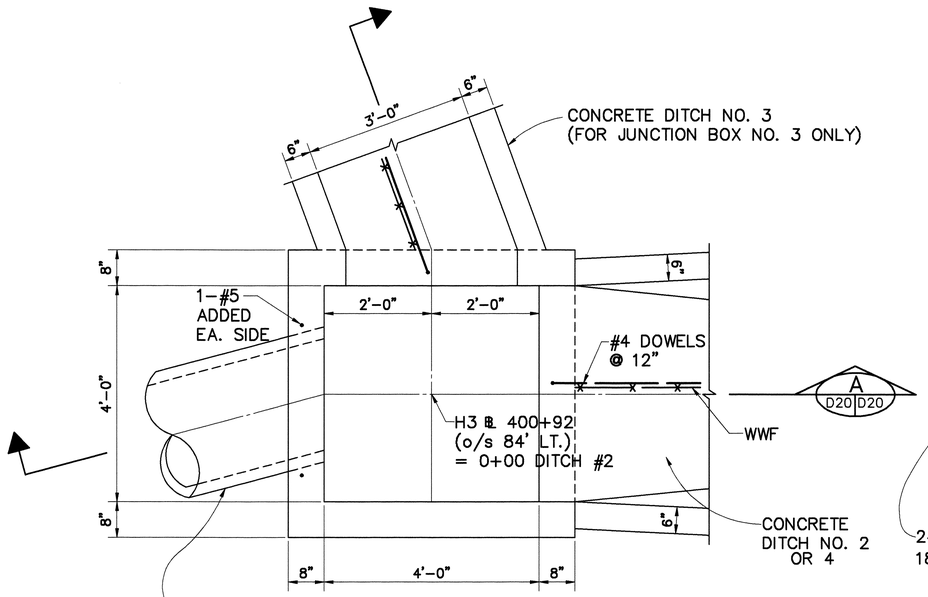

PLAN
SCALE: 3/4"= 1'-0"

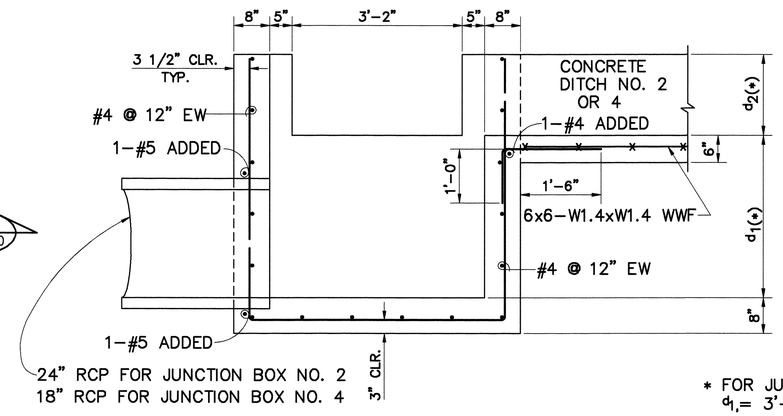

SECTION A
SCALE: 3/4"= 1'-0"

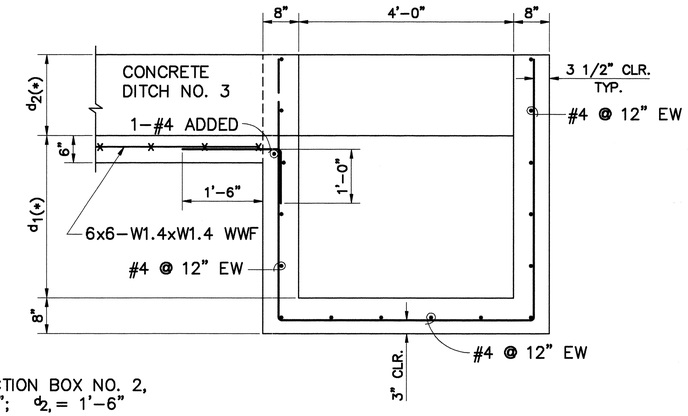

* FOR JUNCTION BOX NO. 2,
d_1,= 3'-0"; d_2,= 1'-6"
FOR JUNCTION BOX NO. 4,
d_1,= 2'-0"; d_2,= 1'-0"

SECTION B
SCALE: 3/4"= 1'-0"

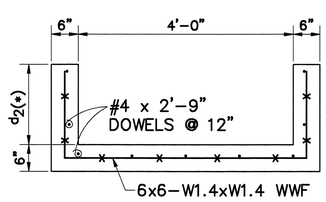

SECTION 1
SCALE: 3/4"= 1'-0"

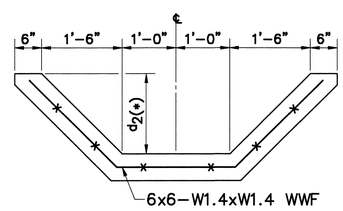

SECTION 2
SCALE: 3/4"= 1'-0"

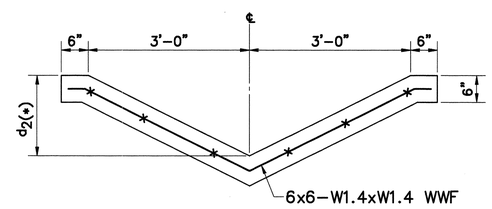

SECTION 3
SCALE: 3/4"= 1'-0"

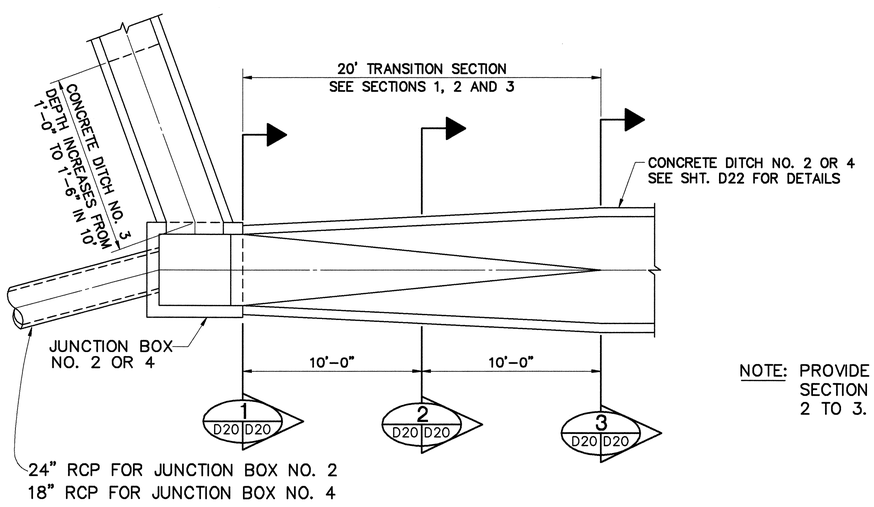

SITE PLAN
SCALE: 1/4"= 1'-0"

NOTE: PROVIDE SMOOTH TRANSITION FROM SECTION 1 TO 2 AND FROM SECTION 2 TO 3.

JUNCTION BOX NO. 2 AND 4

DATE	REVISION
9/30/93	REVISED DETAILS FOR JUNCTION BOX NO. 4.

TIT KWONG CHUN
REGISTERED PROFESSIONAL ENGINEER
No. 2147-S
HAWAII, U.S.A.

THIS WORK WAS PREPARED BY ME OR UNDER MY SUPERVISION
***
PaCEn, Inc.
dba: PARK ENGINEERING

REGINALD M. SUZUKA
REGISTERED PROFESSIONAL ENGINEER
No. 1462-C
HAWAII, U.S.A.

THIS WORK WAS PREPARED BY ME OR UNDER MY SUPERVISION
PaCEn, Inc.
dba: PARK ENGINEERING

***SIGNATURE HAS BEEN DIGITIZED

STATE OF HAWAII
DEPARTMENT OF TRANSPORTATION
HIGHWAYS DIVISION

DRAINAGE DETAILS

INTERSTATE ROUTE H-3
F.A.I. PROJECT NO. I-H3-I(59)

SCALE: AS SHOWN DATE: JUNE 1993

SHEET No. D20 OF 32 SHEETS

ADD. 50

ORIGINAL PLAN | NOTEBOOK No. | SURVEY PLOTTED BY | DRAWN BY | TRACED BY | DESIGNED BY | QUANTITIES BY | CHECKED BY | DATE

FED. ROAD DIS. NO.	STATE	FED. AID PROJ. NO.	FISCAL YEAR	SHEET NO.	TOTAL SHEETS
HAWAII	HAW.	I-H3-1(59)	1993	51	211

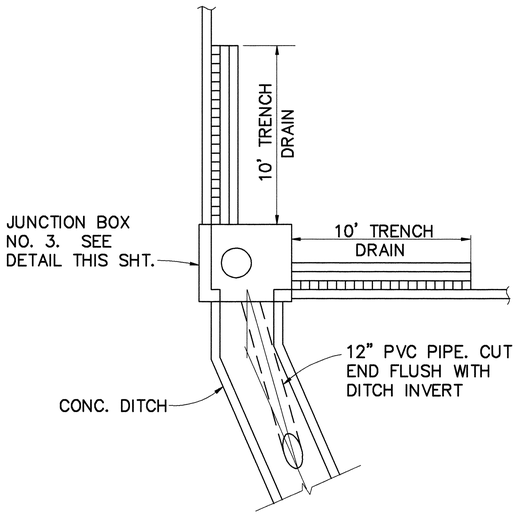

SITE PLAN

SCALE: 1/4"= 1'-0"

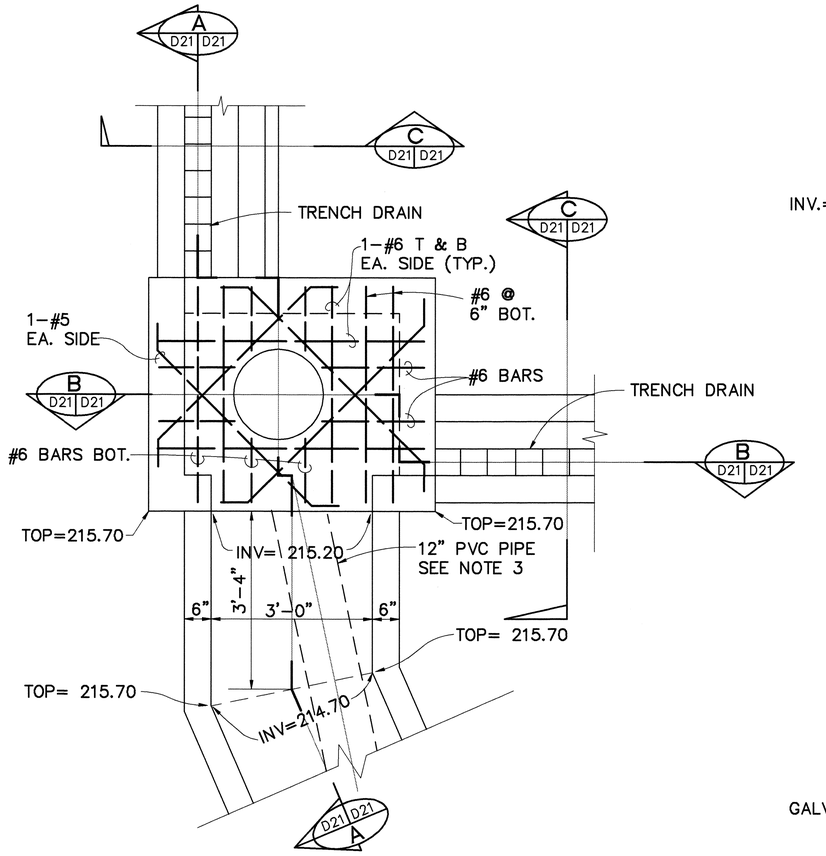

PLAN - JUNCTION BOX NO. 3

SCALE: 3/4"= 1'-0"

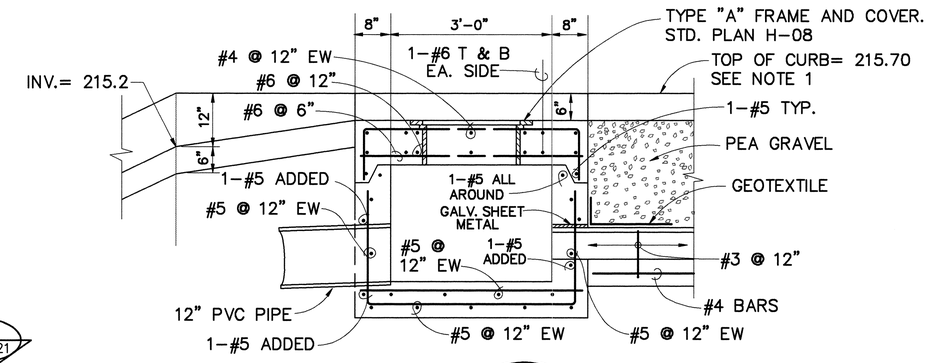

SECTION A D21 D21

SCALE: 3/4"= 1'-0"

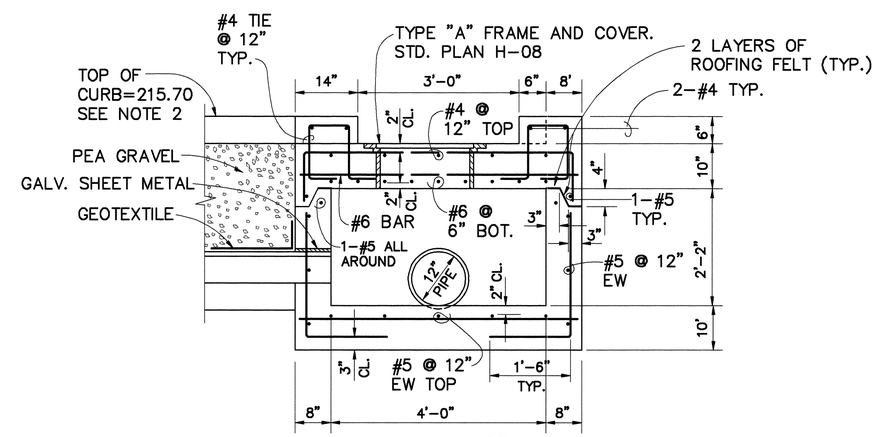

SECTION B D21 D21

SCALE: 3/4"= 1'-0"

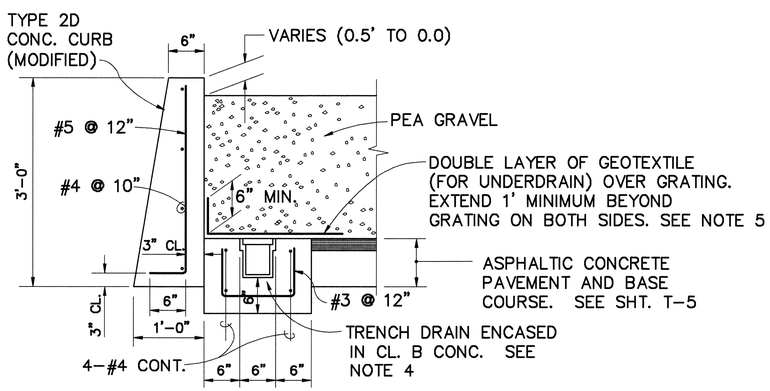

SECTION C D21 D21

SCALE: 1"= 1'-0"

NOTES:

1. TOP OF CURB TO REMAIN LEVEL FOR 21 FEET.
2. TOP OF CURB TO REMAIN LEVEL FOR 14.5 FEET.
3. PVC PIPE SHALL BE JOHN-MANVILLE "BLUE BRUTE" CLASS 100 WATER PIPE CONFORMING TO AWWA C900 OR APPROVED EQUIVALENT.
4. THE CONTRACTOR SHALL FURNISH TRENCH DRAIN MEETING THE FOLLOWING REQUIREMENTS
   - H-20 WHEEL LOAD CAPACITY
   - ALL MATERIALS SHALL BE CORROSION RESISTANT
   - MINIMUM INSIDE CHANNEL DEPTH AND WIDTH SHALL BE 5" AND 4", RESPECTIVELY
   - GRATING SHALL BE OF THE SLOTTED TYPE WITH SIX SLOTS PER FOOT APPROXIMATELY 1"x 4" IN SIZE. LOCKING DEVICE(S) SHALL BE PROVIDED TO SECURE THE GRATING TO THE CHANNEL AND/OR FRAME

   THE CONTRACTOR SHALL SUBMIT SHOP DRAWINGS AND SPECIFICATION DATA FOR APPROVAL INCLUDING COPIES OF THE MANUFACTURER'S RECOMMENDED METHOD OF INSTALLATION AND ASSEMBLY.
5. THE GEOTEXTILE SHALL BE PLACED AND SECURED TO THE SUPPORTING SURFACE IN SUCH A MANNER THAT THE PEA GRAVEL WILL NOT ENTER THE TRENCH DRAIN.

TIT KWONG CHUN
REGISTERED PROFESSIONAL ENGINEER
No. 2147-S
HAWAII, U.S.A.

THIS WORK WAS PREPARED BY ME OR UNDER MY SUPERVISION

***

Park, Inc.
dba: PARK ENGINEERING

REGINALD M. SUZIKA
REGISTERED PROFESSIONAL ENGINEER
No. 1462-C
HAWAII, U.S.A.

THIS WORK WAS PREPARED BY ME OR UNDER MY SUPERVISION

Park, Inc.
dba: PARK ENGINEERING

*** SIGNATURE HAS BEEN DIGITIZED

STATE OF HAWAII
DEPARTMENT OF TRANSPORTATION
HIGHWAYS DIVISION

DRAINAGE DETAILS

INTERSTATE ROUTE H-3
F.A.I. PROJECT NO. I-H3-1(59)

SCALE: AS NOTED DATE: JUNE 1993

SHEET No. D21 OF 32 SHEETS

ORIGINAL PLAN | NOTEBOOK No. | SURVEY PLOTTED BY | DRAWN BY | TRACED BY | DESIGNED BY | QUANTITIES BY | CHECKED BY | DATE

JUNCBOX3 3/24/93 GKI
PHASE 1A RE-PACKAGE

FED. ROAD DIS. NO.	STATE	FED. AID PROJ. NO.	FISCAL YEAR	SHEET NO.	TOTAL SHEETS
HAWAII	HAW.	I-H3-1(59)	1993	ADD.52	211

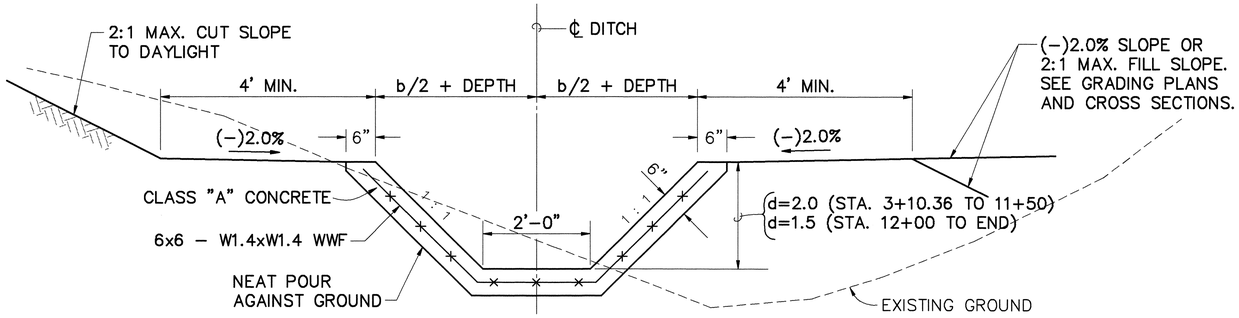

TYPICAL SECTION - TRAPEZOIDAL DITCH

3/4" = 1'-0"

NOTE: SEE THIS SHEET FOR JOINT DETAILS

CURVE NO.	DITCH NO.	b (ft)	DEPTH (ft)	℄ R= (ft)	DELTA (d,m,s)	T (ft)	C (ft)	Lc (ft)	P.C. STATION	P.T. STATION
1	1	3	3	50	89°09'58"	49.28	70.19	77.81	2+12.55	2+90.36
2	1	2	2	400	8°30'51"	29.78	59.39	59.44	4+30.79	4+90.23
3	1	2	2	400	6°58'11"	24.36	48.63	48.66	6+41.10	6+89.76
4	1	2	2	400	5°42'38"	19.95	39.85	39.87	10+47.45	10+87.32
5	1	2	1.5	400	6°50'34"	23.91	47.74	47.77	12+43.46	12+91.23
6	1	2	1.5	1000	4°28'02"	39.00	77.95	77.97	14+80.11	15+58.08
7	1	2	1.5	500	11°18'36"	49.51	98.54	98.68	16+73.53	17+72.21

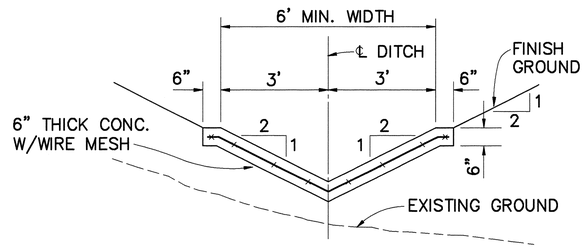

TYPICAL SECTION - DITCH NO. 2 CONDITION A

SCALE: 1/2"= 1'-0"

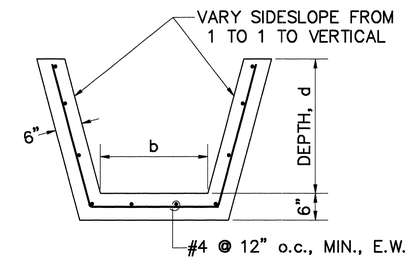

TYPICAL TRANSITION SECTION

N.T.S.

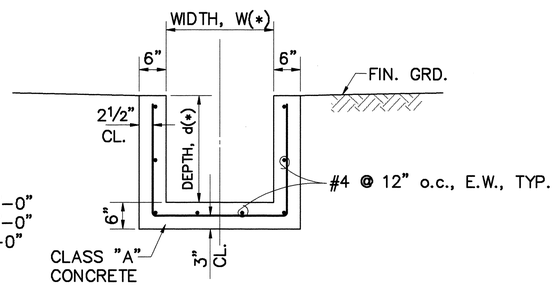

* FOR DITCH NO. 1, d= 3'-0", W=3'-0"
FOR DITCH NO. 3, d= 1'-0", W=3'-0"
FOR DITCH NO. 4, d=1'-6", W=2'-0"
EXCEPT WHERE NOTED OTHERWISE

TYPICAL SECTION - RECTANGULAR DITCH

FOR DITCH NOS., 1, 3 AND 4

NOT TO SCALE

** FOR DITCH NO. 2, W=6
FOR DITCH NO. 4, W=4

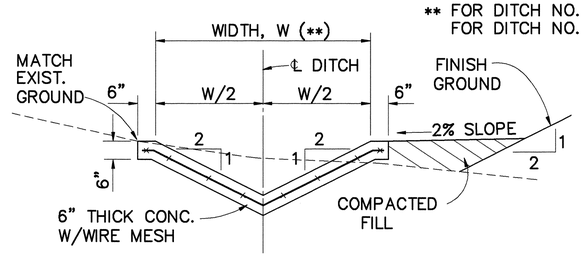

TYPICAL SECTION - DITCH NOS. 2 AND 4 CONDITION B

SCALE: 1/2"= 1'-0"

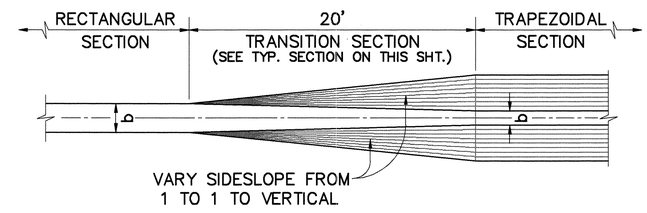

TYPICAL TRANSITION SECTION TRAPEZOIDAL TO RECTANGULAR SECTION

N.T.S.

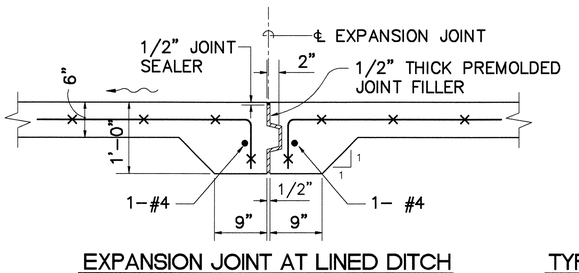

EXPANSION JOINT AT LINED DITCH

(MAX. SPACING 96'-0" o.c.)

SCALE: 1"= 1'-0"

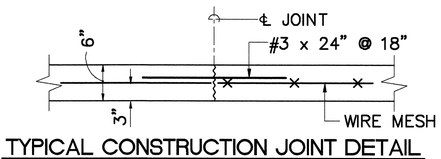

TYPICAL CONSTRUCTION JOINT DETAIL

SCALE: 1"= 1'-0"

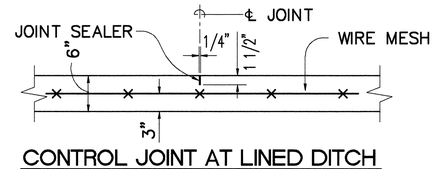

CONTROL JOINT AT LINED DITCH

(MAX. SPACING 32'-0" o.c.)

SCALE: 1"= 1'-0"

REGINALD M SUZUKA
REGISTERED PROFESSIONAL ENGINEER
No. 1462-C
HAWAII, U.S.A.

THIS WORK WAS PREPARED BY ME OR UNDER MY SUPERVISION

Reginald M. Suzuka
Park, Inc.
dba: PARK ENGINEERING

STATE OF HAWAII
DEPARTMENT OF TRANSPORTATION
HIGHWAYS DIVISION

DRAINAGE DETAILS

INTERSTATE ROUTE H-3
F.A.I. PROJECT NO. I-H3-1(59)

SCALE: AS NOTED DATE: JUNE 1993

SHEET No. D22 OF 32 SHEETS

DATE	REVISION
9/30/93	REVISED TYPICAL SECTIONS FOR DITCH NO. 4.

SURVEY PLOTTED BY
DRAWN BY
TRACED BY
DESIGNED BY
QUANTITIES BY
CHECKED BY
DATE
ORIGINAL PLAN
NOTEBOOK
No.

ADD. 52

FED. ROAD DIS. NO.	STATE	FED. AID PROJ. NO.	FISCAL YEAR	SHEET NO.	TOTAL SHEETS
HAWAII	HAW.	I-H3-1(59)	1993	ADD. 53	211

DRAINAGE SUMMARY

STRUCTURES			PIPE CULVERTS		ESTIMATED QUANTITIES																					REMARKS
			ITEM NO.		206	207	603	603	603	603	603	603	603	603	604	604	604	604	604	604	604	604	604	604	604	
					2020	0110	0010	9000	9002	9004	9006	1010	1012	1014	4902	4912	4914	4916	4926	4932	4934	4942	4950	4951	4952	4953	
NUMBER	TYPE	STATION	FROM	TO	STRUCTURE EXCAVATION FOR DRAINAGE SYSTEM	DITCH EXCAVATION	BED COURSE MATERIAL FOR CULVERT	18-IN. REINF. CONC. PIPE, CL. III OR 18-IN. SPIRAL RIB METAL PIPE, SHEET THICK-NESS, 0.075 INCH	24-IN. REINF. CONC. PIPE, CL. III OR 24-IN. SPIRAL RIB METAL PIPE, SHEET THICK-NESS, 0.075 INCH	30-IN. REINF. CONC. PIPE, CL. III OR 30-IN. SPIRAL RIB METAL PIPE, SHEET THICK-NESS, 0.075 INCH	36-IN. REINF. CONC. PIPE, CL. III OR 36-IN. SPIRAL RIB METAL PIPE, SHEET THICK-NESS, 0.075 INCH	24-IN. REINF. CONC. PIPE, CLASS III	30-IN. REINF. CONC. PIPE, CLASS III	36-IN. REINF. CONC. PIPE, CLASS III	DROP INTAKE, TYPE A 5.00 FEET TO 5.99 FEET	TYPE I DRAIN INLET 4.00 FEET TO 4.99 FEET	TYPE I DRAIN INLET 5.00 FEET TO 5.99 FEET	TYPE I DRAIN INLET 6.00 FEET TO 6.99 FEET	TYPE I DRAIN INLET 11.00 FEET TO 11.99 FEET	TYPE II DRAIN INLET 4.00 FEET TO 4.99 FEET	TYPE II DRAIN INLET 5.00 FEET TO 5.99 FEET	TYPE II DRAIN INLET 9.00 FEET TO 9.99 FEET	JUNCTION BOX NO. 1 6.00 FEET TO 6.99 FEET	JUNCTION BOX NO. 2 4.00 FEET TO 4.99 FEET	JUNCTION BOX NO. 3 3.00 FEET TO 3.99 FEET	JUNCTION BOX NO. 4 3.00 FEET TO 3.99 FEET	
			UNITS USED		C.Y.	C.Y.	C.Y.	L.F.	L.F.	L.F.	L.F.	L.F.	L.F.	L.F.	EA.	EA.	EA.	EA.	EA.	EA.	EA.	EA.	EA.	EA.	EA.	EA.	
1	D.I. (SPECIAL)	H-3 ℄ 376+20 (O/S 105' RT.)	H-3 ℄ 376+20 (O/S 105' RT.)	H-3 ℄ 376+20 (O/S 37.50' RT.)	76.0		22.6			67																
2	D.I. TYPE II	H-3 ℄ 376+20 (O/S 37.50' RT.)	H-3 ℄ 376+20 (O/S 37.50' RT.)	H-3 ℄ 376+20 (O/S 2.5' LT.)	76.0		13.2			39												1				
3	D.I. TYPE I	H-3 ℄ 376+20 (O/S 2.5' LT.)	H-3 ℄ 376+20 (O/S 2.5' LT.)	H-3 ℄ 376+20 (O/S 173' LT.)	262.7		57.4			170									1							
9	D.I. TYPE I	H-3 ℄ 381+60 (O/S 2.5' LT.)	H-3 ℄ 381+60 (O/S 2.5' LT.)	H-3 ℄ 379+80 (O/S 2.5' LT.)	201.5		52.6		180								1									
7	D.I. TYPE I	H-3 ℄ 379+80 (O/S 2.5' LT.)	H-3 ℄ 379+80 (O/S 2.5' LT.)	H-3 ℄ 378+00 (O/S 2.5' LT.)	199.5		52.6		180									1								
5	D.I. TYPE I	H-3 ℄ 378+00 (O/S 2.5' LT.)	H-3 ℄ 378+00 (O/S 2.5' LT.)	H-3 ℄ 376+20 (O/S 2.5' LT.)	185.2		52.6		180									1								
4	D.I. TYPE II	H-3 ℄ 378+00 (O/S 37.50' RT.)	H-3 ℄ 378+00 (O/S 37.50' RT.)	H-3 ℄ 378+00 (O/S 2.5' LT.)	36.1		11.4		39											1						
6	D.I. TYPE II	H-3 ℄ 379+80 (O/S 37.50' RT.)	H-3 ℄ 379+80 (O/S 37.50' RT.)	H-3 ℄ 379+80 (O/S 2.5' LT.)	36.1		11.4		39											1						
8	D.I. TYPE II	H-3 ℄ 381+45 (O/S 37.50' RT.)	H-3 ℄ 381+45 (O/S 37.50' RT.)	H-3 ℄ 381+60 (O/S 2.5' LT.)	33.0		12.3		42											1						
10	D.I. TYPE II	H-3 ℄ 383+30 (O/S 37.50' RT.)	H-3 ℄ 383+30 (O/S 37.50' RT.)	H-3 ℄ 383+30 (O/S 37.50' LT.)	59.7		21.6		74											1						
11	D.I. TYPE II	H-3 ℄ 383+30 (O/S 37.50' LT.)	H-3 ℄ 383+30 (O/S 37.50' LT.)	H-3 ℄ 383+30 (O/S 75' LT.)	40.7		10.8					37									1					
2	D.M.H. TYPE "E"	H-3 ℄ 386+75 (O/S 34' RT.)	H-3 ℄ 386+75 (O/S 34' RT.)	H-3 ℄ 385+90 (O/S 34' RT.)	77.0		24.8		85																	
1	D.M.H. TYPE "D"	H-3 ℄ 385+90 (O/S 34' RT.)	H-3 ℄ 385+90 (O/S 34' RT.)	H-3 ℄ 385+90 (O/S 2.5' RT.)	25.9		9.2		31.5																	
12	D.I. TYPE I	H-3 ℄ 385+90 (O/S 2.5' RT.)	H-3 ℄ 385+90 (O/S 2.5' RT.)	H-3 ℄ 385+90 (O/S 37.00' LT.)	39.3		11.5		39.5								1									
13	D.I. (SPECIAL)	H-3 ℄ 385+90 (O/S 37.00' LT.)																								
16	D.I. TYPE II	H-3 ℄ 388+10 (O/S 37.50' LT.)	H-3 ℄ 388+10 (O/S 37.50' LT.)	H-3 ℄ 387+91 (O/S 2.5' RT.)	41.5		12.6		43											1						
15	D.I. TYPE I	H-3 ℄ 387+91 (O/S 2.5' RT.)	H-3 ℄ 387+91 (O/S 2.5' RT.)	H-3 ℄ 387+70 (O/S 42' RT.)	59.3		13.2		45									1								
14	D.I. TYPE 61614	H-3 ℄ 387+70 (O/S 42' RT.)	H-3 ℄ 387+70 (O/S 42' RT.)	H-3 ℄ 386+75 (O/S 34' RT.)	118.5		28.3		97																	
SUBTOTAL SHEET D23					1568.0	0	418.1	0	1075	276	0	37	0	0	0	0	2	3	1	5	1	1	0	0	0	0	
TOTAL					1568.0	0	418.1	0	1075	276	0	37	0	0	0	0	2	3	1	5	1	1	0	0	0	0	
ROUNDED TOTAL					1570	0	418	0	1075	276	0	37	0	0	0	0	2	3	1	5	1	1	0	0	0	0	

REGINALD M. SUZUKA
REGISTERED PROFESSIONAL ENGINEER
No. 1462-C
HAWAII, U.S.A.

THIS WORK WAS PREPARED BY ME OR UNDER MY SUPERVISION

Reginald M. Suzuka
Parsons, INC.
dba: PARK ENGINEERING

DATE	SURVEY PLOTTED BY	DRAWN BY	TRACED BY	DESIGNED BY	QUANTITIES BY	CHECKED BY

ORIGINAL PLAN
NOTEBOOK
No.

DATE	REVISION
9/30/93	REVISED DRAINAGE SUMMARY PER GRADING PLAN.

STATE OF HAWAII
DEPARTMENT OF TRANSPORTATION
HIGHWAYS DIVISION

DRAINAGE ESTIMATED QUANTITIES

INTERSTATE ROUTE H-3
F.A.I. PROJECT NO. I-H3-1(59)

SCALE: NONE DATE: JUNE 1993

SHEET No. D23 OF 32 SHEETS

ADD. 53

DRAEST1 9/29/93 GKI
PHASE-1A RE-PACKAGE

DRAINAGE SUMMARY

FED. ROAD DIS. NO.	STATE	FED. AID PROJ. NO.	FISCAL YEAR	SHEET NO.	TOTAL SHEETS
HAWAII	HAW.	I-H3-1(59)	1993	ADD. 54	211

STRUCTURES			PIPE CULVERTS		ESTIMATED QUANTITIES																					REMARKS
			ITEM NO.		604	604	604	604	604	604	604	604	604	604	604	604	604	604	604	604	604	604	640	640	640	640	
					4980	4982	4984	4988	4992	4994	5000	5030	5032	5062	5100	5110	5120	5130	5140	5150	5160	5170	5020	5030	8000	8010	
NUMBER	TYPE	STATION	FROM	TO	DRAIN INLET NOS. 1 & 44 4.00 FEET TO 4.99 FEET	DRAIN INLET NOS. 19 & 33 5.00 FEET TO 5.99 FEET	DRAIN INLET NO. 22 6.00 FEET TO 6.99 FEET	DRAIN INLET NO. 13 23.00 FEET TO 23.99 FEET	TYPE 61614 DRAIN INLET 4.00 FEET TO 4.99 FEET	TYPE 61614 DRAIN INLET 5.00 FEET TO 5.99 FEET	TYPE 61614 DRAIN INLET 8.00 FEET TO 8.99 FEET	TYPE "D" DRAIN MANHOLE 4.00 FEET TO 4.99 FEET	TYPE "D" DRAIN MANHOLE 5.00 FEET TO 5.99 FEET	TYPE "E" DRAIN MANHOLE 7.00 FEET TO 7.99 FEET	OUTLET NO. 1	OUTLET NO. 2	OUTLET NO. 3	OUTLET NO. 4	OUTLET NO. 5	OUTLET NO. 6	OUTLET NO. 7	OUTLET NO. 8	2.0-FEET WIDE INVERT (SS 1/1) LINED TRAPE-ZOIDAL DRAINAGE DITCH	3.0-FEET WIDE INVERT LINED RECTANGULAR DRAINAGE DITCH	LINED DRAINAGE DITCH CONDITION "A"	LINED DRAINAGE DITCH CONDITION "B"	
			UNITS USED		EA.	EA.	EA.	EA.	EA.	EA.	EA.	EA.	EA.	EA.	EA.	EA.	EA.	EA.	EA.	EA.	EA.	EA.	L.F.	L.F.	L.F.	L.F.	
1	D.I. (SPECIAL)	H-3 ℄ 376+20 (O/S 105' RT.)	H-3 ℄ 376+20 (O/S 105' RT.)	H-3 ℄ 376+20 (O/S 37.50' RT.)	1																					
2	D.I. TYPE II	H-3 ℄ 376+20 (O/S 37.50' RT.)	H-3 ℄ 376+20 (O/S 37.50' RT.)	H-3 ℄ 376+20 (O/S 2.5' LT.)																						
3	D.I. TYPE I	H-3 ℄ 376+20 (O/S 2.5' LT.)	H-3 ℄ 376+20 (O/S 2.5' LT.)	H-3 ℄ 376+20 (O/S 173' LT.)																						
9	D.I. TYPE I	H-3 ℄ 381+60 (O/S 2.5' LT.)	H-3 ℄ 381+60 (O/S 2.5' LT.)	H-3 ℄ 379+80 (O/S 2.5' LT.)																						
7	D.I. TYPE I	H-3 ℄ 379+80 (O/S 2.5' LT.)	H-3 ℄ 379+80 (O/S 2.5' LT.)	H-3 ℄ 378+00 (O/S 2.5' LT.)																						
5	D.I. TYPE I	H-3 ℄ 378+00 (O/S 2.5' LT.)	H-3 ℄ 378+00 (O/S 2.5' LT.)	H-3 ℄ 376+20 (O/S 2.5' LT.)																						
4	D.I. TYPE II	H-3 ℄ 378+00 (O/S 37.50' RT.)	H-3 ℄ 378+00 (O/S 37.50' RT.)	H-3 ℄ 378+00 (O/S 2.5' LT.)																						
6	D.I. TYPE II	H-3 ℄ 379+80 (O/S 37.50' RT.)	H-3 ℄ 379+80 (O/S 37.50' RT.)	H-3 ℄ 379+80 (O/S 2.5' LT.)																						
8	D.I. TYPE II	H-3 ℄ 381+45 (O/S 37.50' RT.)	H-3 ℄ 381+45 (O/S 37.50' RT.)	H-3 ℄ 381+60 (O/S 2.5' LT.)																						
10	D.I. TYPE II	H-3 ℄ 383+30 (O/S 37.50' RT.)	H-3 ℄ 383+30 (O/S 37.50' RT.)	H-3 ℄ 383+30 (O/S 37.50' LT.)																						
11	D.I. TYPE II	H-3 ℄ 383+30 (O/S 37.50' LT.)	H-3 ℄ 383+30 (O/S 37.50' LT.)	H-3 ℄ 383+30 (O/S 75' LT.)																						
2	D.M.H. TYPE "E"	H-3 ℄ 386+75 (O/S 34' RT.)	H-3 ℄ 386+75 (O/S 34' RT.)	H-3 ℄ 385+90 (O/S 34' RT.)										1												
1	D.M.H. TYPE "D"	H-3 ℄ 385+90 (O/S 34' RT.)	H-3 ℄ 385+90 (O/S 34' RT.)	H-3 ℄ 385+90 (O/S 2.5' RT.)								1														
12	D.I. TYPE I	H-3 ℄ 385+90 (O/S 2.5' RT.)	H-3 ℄ 385+90 (O/S 2.5' RT.)	H-3 ℄ 385+90 (O/S 37.00' LT.)																						
13	D.I. (SPECIAL)	H-3 ℄ 385+90 (O/S 37.00' LT.)						1																		
16	D.I. TYPE II	H-3 ℄ 388+10 (O/S 37.50' LT.)	H-3 ℄ 388+10 (O/S 37.50' LT.)	H-3 ℄ 387+91 (O/S 2.5' RT.)							1															
15	D.I. TYPE I	H-3 ℄ 387+91 (O/S 2.5' RT.)	H-3 ℄ 387+91 (O/S 2.5' RT.)	H-3 ℄ 387+70 (O/S 42' RT.)																						
14	D.I. TYPE 61614	H-3 ℄ 387+70 (O/S 42' RT.)	H-3 ℄ 387+70 (O/S 42' RT.)	H-3 ℄ 386+75 (O/S 34' RT.)							1															
SUBTOTAL SHEET D24					1	0	0	1	0	0	2	1	0	1	0	0	0	0	0	0	0	0	0	0	0	0
TOTAL					1	0	0	1	0	0	2	1	0	1	0	0	0	0	0	0	0	0	0	0	0	0
ROUNDED TOTAL					1	0	0	1	0	0	2	1	0	1	0	0	0	0	0	0	0	0	0	0	0	0

REGINALD M SUZUKA
REGISTERED PROFESSIONAL ENGINEER
No. 1462-C
HAWAII, U.S.A.

THIS WORK WAS PREPARED BY ME OR UNDER MY SUPERVISION

Reginald M. Suzuka
Pacific, Inc.
dba: PARK ENGINEERING

DATE	REVISION
9/30/93	REVISED DRAINAGE SUMMARY PER DRAINAGE PLAN

STATE OF HAWAII
DEPARTMENT OF TRANSPORTATION
HIGHWAYS DIVISION

DRAINAGE ESTIMATED QUANTITIES

INTERSTATE ROUTE H-3
F.A.I. PROJECT NO. I-H3-1(59)

SCALE: NONE DATE: JUNE 1993

SHEET No. D24 OF 32 SHEETS

ADD. 54

ORIGINAL PLAN | NOTEBOOK No. ____
SURVEY PLOTTED BY ____ DATE
DRAWN BY ____
TRACED BY ____
DESIGNED BY ____
QUANTITIES BY ____
CHECKED BY ____

DRAEST1A 9/29/93 GKI
PHASE-1A RE-PACKAGE

DRAINAGE SUMMARY

FED. ROAD DIS. NO.	STATE	FED. AID PROJ. NO.	FISCAL YEAR	SHEET NO.	TOTAL SHEETS
HAWAII	HAW.	I-H3-1(59)	1993	ADD. 55	211

STRUCTURES			PIPE CULVERTS		ESTIMATED QUANTITIES																					REMARKS
			ITEM NO.		206	207	603	603	603	603	603	603	603	603	604	604	604	604	604	604	604	604	604	604	604	
					2020	0110	0010	9000	9002	9004	9006	1010	1012	1014	4902	4912	4914	4916	4926	4932	4934	4942	4950	4951	4952	4953	
NUMBER	TYPE	STATION	FROM	TO	STRUCTURE EXCAVATION FOR DRAINAGE SYSTEM	DITCH EXCAVATION	BED COURSE MATERIAL FOR CULVERT	18-IN. REINF. CONC. PIPE, CL. III OR 18-IN. SPIRAL RIB METAL PIPE, SHEET THICKNESS, 0.075 INCH	24-IN. REINF. CONC. PIPE, CL. III OR 24-IN. SPIRAL RIB METAL PIPE, SHEET THICKNESS, 0.075 INCH	30-IN. REINF. CONC. PIPE, CL. III OR 30-IN. SPIRAL RIB METAL PIPE, SHEET THICKNESS, 0.075 INCH	36-IN. REINF. CONC. PIPE, CL. III OR 36-IN. SPIRAL RIB METAL PIPE, SHEET THICKNESS, 0.075 INCH	24-IN. REINF. CONC. PIPE, CLASS III	30-IN. REINF. CONC. PIPE, CLASS III	36-IN. REINF. CONC. PIPE, CLASS III	DROP INTAKE, TYPE A 5.00 FEET TO 5.99 FEET	TYPE I DRAIN INLET 4.00 FEET TO 4.99 FEET	TYPE I DRAIN INLET 5.00 FEET TO 5.99 FEET	TYPE I DRAIN INLET 6.00 FEET TO 6.99 FEET	TYPE I DRAIN INLET 11.00 FEET TO 11.99 FEET	TYPE II DRAIN INLET 4.00 FEET TO 4.99 FEET	TYPE II DRAIN INLET 5.00 FEET TO 5.99 FEET	TYPE II DRAIN INLET 9.00 FEET TO 9.99 FEET	JUNCTION BOX NO. 1 6.00 FEET TO 6.99 FEET	JUNCTION BOX NO. 2 4.00 FEET TO 4.99 FEET	JUNCTION BOX NO. 3 3.00 FEET TO 3.99 FEET	JUNCTION BOX NO. 4 3.00 FEET TO 3.99 FEET	
			UNITS USED		C.Y.	C.Y.	C.Y.	L.F.	L.F.	L.F.	L.F.	L.F.	L.F.	L.F.	EA.	EA.	EA.	EA.	EA.	EA.	EA.	EA.	EA.	EA.	EA.	EA.	
17	D.I. TYPE 61614	H-3 ℄ 389+50 (O/S 42' RT.)	H-3 ℄ 389+50 (O/S 42' RT.)	H-3 ℄ 389+50 (O/S 2.5' RT.)	35.0		11.5		39.5																	
18	D.I. TYPE I	H-3 ℄ 389+50 (O/S 2.5' RT.)	H-3 ℄ 389+50 (O/S 2.5' RT.)	H-3 ℄ 389+50 (O/S 37.50' LT.)	37.0		11.5		39.5								1									
20	D.I. TYPE 61614	H-3 ℄ 391+30 (O/S 42' RT.)	H-3 ℄ 391+30 (O/S 42' RT.)	H-3 ℄ 391+30 (O/S 2.5' RT.)	36.3		11.5		39.5																	
21	D.I. TYPE I	H-3 ℄ 391+30 (O/S 2.5' RT.)	H-3 ℄ 391+30 (O/S 2.5' RT.)	H-3 ℄ 391+30 (O/S 37.50' LT.)	38.2		11.5		39.5									1								
23	D.I. TYPE 61614	H-3 ℄ 393+10 (O/S 42' RT.)	H-3 ℄ 393+10 (O/S 42' RT.)	H-3 ℄ 393+10 (O/S 2.5' RT.)	30.6		11.5		39.5																	
24	D.I.TYPE I	H-3 ℄ 393+10 (O/S 2.5' RT.)	H-3 ℄ 393+10 (O/S 2.5' RT.)	H-3 ℄ 393+10 (O/S 37.50' LT.)	32.5		11.5		39.5								1									
26	D.I. TYPE 61614	H-3 ℄ 394+90 O/S 42' RT.)	H-3 ℄ 394+90 (O/S 42' RT.)	H-3 ℄ 394+90 (O/S 2.5' RT.)	29.8		11.5		39.5																	
27	D.I. TYPE I	H-3 ℄ 394+90 (O/S 2.5' RT.)	H-3 ℄ 394+90 (O/S 2.5' RT.)	H-3 ℄ 394+90 (O/S 37.50' LT.)	31.7		11.5		39.5							1										
29	D.I. TYPE 61614	H-3 ℄ 396+70 (O/S 42' RT.)	H-3 ℄ 396+70 (O/S 42' RT.)	H-3 ℄ 396+70 (O/S 2.5' RT.)	30.5		11.5		39.5																	
30	D.I. TYPE I	H-3 ℄ 396+70 (O/S 2.5' RT.)	H-3 ℄ 396+70 (O/S 2.5' RT.)	H-3 ℄ 396+70 (O/S 37.50' LT.)	32.2		11.5		39.5								1									
31	D.I. TYPE II	H-3 ℄ 396+70 (O/S 37.50' LT.)	H-3 ℄ 396+70 (O/S 37.50' LT.)	H-3 ℄ 394+90 (O/S 37.50' LT.)	158.1		52.3		179												1					
11	D.M.H. TYPE "D"	H-3 ℄ 394+90 (O/S 37.50' LT.)	H-3 ℄ 394+90 (O/S 37.50' LT.)	H-3 ℄ 393+10 (O/S 37.50' LT.)	132.6		52.3		179																	
10	D.M.H. TYPE "D"	H-3 ℄ 393+10 (O/S 37.50' LT.)	H-3 ℄ 393+10 (O/S 37.50' LT.)	H-3 ℄ 391+30 (O/S 37.50' LT.)	172.8		60.5			179																
22	D.I. (SPECIAL)	H-3 ℄ 391+30 (O/S 37.50' LT.)	H-3 ℄ 391+30 (O/S 37.50' LT.)	H-3 ℄ 389+50 (O/S 37.50' LT.)	205.4		68.9				179															
19	D.I. (SPECIAL)	H-3 ℄ 389+50 (O/S 37.50' LT.)	H-3 ℄ 389+50 (O/S 37.50' LT.)	H-3 ℄ 389+21 (O/S 103' LT.)	197.5		27.7				72															
6	D.M.H. TYPE "D"	H-3 ℄ 389+21 (O/S 103' LT.)	H-3 ℄ 389+21 (O/S 103' LT.)	H-3 ℄ 388+91 (O/S 108' LT.)	39.5		11.2							29												
SUBTOTAL SHEET D25					1239.7	0	387.9	0	753	179	251	0	0	29	0	1	3	1	0	0	1	0	0	0	0	0
TOTAL					2807.7	0	806.0	0	1828	455	251	37	0	29	0	1	5	4	1	5	2	1	0	0	0	0
ROUNDED TOTAL					2808	0	806	0	1828	455	251	37	0	29	0	1	5	4	1	5	2	1	0	0	0	0

REGINALD M. SUZUKA
REGISTERED PROFESSIONAL ENGINEER
No. 1462-C
HAWAII, U.S.A.

THIS WORK WAS PREPARED BY ME OR UNDER MY SUPERVISION

Reginald M. Suzuka
Park, INC.
dba: PARK ENGINEERING

DATE	
SURVEY PLOTTED BY	
DRAWN BY	
TRACED BY	
DESIGNED BY	
QUANTITIES BY	
CHECKED BY	
ORIGINAL PLAN	
NOTEBOOK	No.

STATE OF HAWAII
DEPARTMENT OF TRANSPORTATION
HIGHWAYS DIVISION

DRAINAGE ESTIMATED QUANTITIES

INTERSTATE ROUTE H-3
F.A.I. PROJECT NO. I-H3-1(59)

SCALE: NONE DATE: JUNE 1993

SHEET No. D25 OF 32 SHEETS

DATE	REVISION
9/30/93	REVISED DRAINAGE SUMMARY PER DRAINAGE PLAN.

ADD. 55

DRAEST2 9/29/93 GKI
PHASE-1A RE-PACKAGE

FED. ROAD DIS. NO.	STATE	FED. AID PROJ. NO.	FISCAL YEAR	SHEET NO.	TOTAL SHEETS
HAWAII	HAW.	I-H3-1(59)	1993	ADD. 56	211

DRAINAGE SUMMARY

STRUCTURES			PIPE CULVERTS		ESTIMATED QUANTITIES																					REMARKS
			ITEM NO.		604	604	604	604	604	604	604	604	604	604	604	604	604	604	604	604	604	604	640	640	640	640	
					4980	4982	4984	4988	4992	4994	5000	5030	5032	5062	5100	5110	5120	5130	5140	5150	5160	5170	5020	5030	8000	8010	
NUMBER	TYPE	STATION	FROM	TO	DRAIN INLET NOS. 1 & 44 4.00 FEET TO 4.99 FEET	DRAIN INLET NOS. 19 & 33 5.00 FEET TO 5.99 FEET	DRAIN INLET NO. 22 6.00 FEET TO 6.99 FEET	DRAIN INLET NO. 13 23.00 FEET TO 23.99 FEET	TYPE 61614 DRAIN INLET 4.00 FEET TO 4.99 FEET	TYPE 61614 DRAIN INLET 5.00 FEET TO 5.99 FEET	TYPE 61614 DRAIN INLET 8.00 FEET TO 8.99 FEET	TYPE "D" DRAIN MANHOLE 4.00 FEET TO 4.99 FEET	TYPE "D" DRAIN MANHOLE 5.00 FEET TO 5.99 FEET	TYPE "E" DRAIN MANHOLE 7.00 FEET TO 7.99 FEET	OUTLET NO. 1	OUTLET NO. 2	OUTLET NO. 3	OUTLET NO. 4	OUTLET NO. 5	OUTLET NO. 6	OUTLET NO. 7	OUTLET NO. 8	2.0-FEET WIDE INVERT (SS 1/1) LINED TRAPE-ZOIDAL DRAINAGE DITCH	3.0-FEET WIDE INVERT LINED RECTANGULAR DRAINAGE DITCH	LINED DRAINAGE DITCH CONDITION "A"	LINED DRAINAGE DITCH CONDITION "B"	
			UNITS USED		EA.	EA.	EA.	EA.	EA.	EA.	EA.	EA.	EA.	EA.	EA.	EA.	EA.	EA.	EA.	EA.	EA.	EA.	L.F.	L.F.	L.F.	L.F.	
17	D.I. TYPE 61614	H-3 ℄ 389+50 (O/S 42' RT.)	H-3 ℄ 389+50 (O/S 42' RT.)	H-3 ℄ 389+50 (O/S 2.5' RT.)						1																
18	D.I. TYPE I	H-3 ℄ 389+50 (O/S 2.5' RT.)	H-3 ℄ 389+50 (O/S 2.5' RT.)	H-3 ℄ 389+50 (O/S 37.50' LT.)																						
20	D.I. TYPE 61614	H-3 ℄ 391+30 (O/S 42' RT.)	H-3 ℄ 391+30 (O/S 42' RT.)	H-3 ℄ 391+30 (O/S 2.5' RT.)						1																
21	D.I. TYPE I	H-3 ℄ 391+30 (O/S 2.5' RT.)	H-3 ℄ 391+30 (O/S 2.5' RT.)	H-3 ℄ 391+30 (O/S 37.50' LT.)																						
23	D.I. TYPE 61614	H-3 ℄ 393+10 (O/S 42' RT.)	H-3 ℄ 393+10 (O/S 42' RT.)	H-3 ℄ 393+10 (O/S 2.5' RT.)					1																	
24	D.I.TYPE I	H-3 ℄ 393+10 (O/S 2.5' RT.)	H-3 ℄ 393+10 (O/S 2.5' RT.)	H-3 ℄ 393+10 (O/S 37.50' LT.)																						
26	D.I. TYPE 61614	H-3 ℄ 394+90 O/S 42' RT.)	H-3 ℄ 394+90 (O/S 42' RT.)	H-3 ℄ 394+90 (O/S 2.5' RT.)					1																	
27	D.I. TYPE I	H-3 ℄ 394+90 (O/S 2.5' RT.)	H-3 ℄ 394+90 (O/S 2.5' RT.)	H-3 ℄ 394+90 (O/S 37.50' LT.)																						
29	D.I. TYPE 61614	H-3 ℄ 396+70 (O/S 42' RT.)	H-3 ℄ 396+70 (O/S 42' RT.)	H-3 ℄ 396+70 (O/S 2.5' RT.)					1																	
30	D.I. TYPE I	H-3 ℄ 396+70 (O/S 2.5' RT.)	H-3 ℄ 396+70 (O/S 2.5' RT.)	H-3 ℄ 396+70 (O/S 37.50' LT.)																						
31	D.I. TYPE II	H-3 ℄ 396+70 (O/S 37.50' LT.)	H-3 ℄ 396+70 (O/S 37.50' LT.)	H-3 ℄ 394+90 (O/S 37.50' LT.)																						
11	D.M.H. TYPE "D"	H-3 ℄ 394+90 (O/S 37.50' LT.)	H-3 ℄ 394+90 (O/S 37.50' LT.)	H-3 ℄ 393+10 (O/S 37.50' LT.)								1														
10	D.M.H. TYPE "D"	H-3 ℄ 393+10 (O/S 37.50' LT.)	H-3 ℄ 393+10 (O/S 37.50' LT.)	H-3 ℄ 391+30 (O/S 37.50' LT.)									1													
22	D.I. (SPECIAL)	H-3 ℄ 391+30 (O/S 37.50' LT.)	H-3 ℄ 391+30 (O/S 37.50' LT.)	H-3 ℄ 389+50 (O/S 37.50' LT.)			1																			
19	D.I. (SPECIAL)	H-3 ℄ 389+50 (O/S 37.50' LT.)	H-3 ℄ 389+50 (O/S 37.50' LT.)	H-3 ℄ 389+21 (O/S 103' LT.)		1																				
6	D.M.H. TYPE "D"	H-3 ℄ 389+21 (O/S 103' LT.)	H-3 ℄ 389+21 (O/S 103' LT.)	H-3 ℄ 388+91 (O/S 108' LT.)									1													
SUBTOTAL SHEET D26					0	1	1	0	3	2	0	1	2	0	0	0	0	0	0	0	0	0	0	0	0	0	
TOTAL					1	1	1	1	3	2	2	2	2	1	0	0	0	0	0	0	0	0	0	0	0	0	
ROUNDED TOTAL					1	1	1	1	3	2	2	2	2	1	0	0	0	0	0	0	0	0	0	0	0	0	

REGINALD M. SUZUKA
REGISTERED PROFESSIONAL ENGINEER
No. 1462-C
HAWAII, U.S.A.

THIS WORK WAS PREPARED BY ME OR UNDER MY SUPERVISION

Reginald M. Suzuka

PorEn, INC.
dba: PARK ENGINEERING

DATE	
SURVEY PLOTTED BY	
DRAWN BY	
TRACED BY	
DESIGNED BY	
QUANTITIES BY	
CHECKED BY	

ORIGINAL PLAN

NOTEBOOK No.

DATE	REVISION
9/30/93	REVISED DRAINAGE SUMMARY PER DRAINAGE PLAN.

STATE OF HAWAII
DEPARTMENT OF TRANSPORTATION
HIGHWAYS DIVISION

DRAINAGE ESTIMATED QUANTITIES

INTERSTATE ROUTE H-3
F.A.I. PROJECT NO. I-H3-1(59)

SCALE: NONE DATE: JUNE 1993

SHEET No. D26 OF 32 SHEETS

ADD. 56

DRAEST2A 9/29/93 GKI
PHASE-1A RE-PACKAGE

FED. ROAD DIS. NO.	STATE	FED. AID PROJ. NO.	FISCAL YEAR	SHEET NO.	TOTAL SHEETS
HAWAII	HAW.	I-H3-1(59)	1993	ADD. 57	211

DRAINAGE SUMMARY

STRUCTURES			PIPE CULVERTS		ESTIMATED QUANTITIES																					REMARKS
			ITEM NO.		206	207	603	603	603	603	603	603	603	603	604	604	604	604	604	604	604	604	604	604	604	604	
					2020	0110	0010	9000	9002	9004	9006	1010	1012	1014	4902	4912	4914	4916	4926	4932	4934	4942	4950	4951	4952	4953	
NUMBER	TYPE	STATION	FROM	TO	STRUCTURE EXCAVATION FOR DRAINAGE SYSTEM	DITCH EXCAVATION	BED COURSE MATERIAL FOR CULVERT	18-IN. REINF. CONC. PIPE, CL. III OR 18-IN. SPIRAL RIB METAL PIPE, SHEET THICKNESS, 0.075 INCH	24-IN. REINF. CONC. PIPE, CL. III OR 24-IN. SPIRAL RIB METAL PIPE, SHEET THICKNESS, 0.075 INCH	30-IN. REINF. CONC. PIPE, CL. III OR 30-IN. SPIRAL RIB METAL PIPE, SHEET THICKNESS, 0.075 INCH	36-IN. REINF. CONC. PIPE, CL. III OR 36-IN. SPIRAL RIP METAL PIPE, SHEET THICKNESS, 0.075 INCH	24-IN. REINF. CONC. PIPE, CLASS III	30-IN. REINF. CONC. PIPE, CLASS III	36-IN. REINF. CONC. PIPE, CLASS III	DROP INTAKE, TYPE A 5.00 FEET TO 5.99 FEET	TYPE I DRAIN INLET 4.00 FEET TO 4.99 FEET	TYPE I DRAIN INLET 5.00 FEET TO 5.99 FEET	TYPE I DRAIN INLET 6.00 FEET TO 6.99 FEET	TYPE I DRAIN INLET 11.00 FEET TO 11.99 FEET	TYPE II DRAIN INLET 4.00 FEET TO 4.99 FEET	TYPE II DRAIN INLET 5.00 FEET TO 5.99 FEET	TYPE II DRAIN INLET 9.00 FEET TO 9.99 FEET	JUNCTION BOX NO. 1 6.00 FEET TO 6.99 FEET	JUNCTION BOX NO. 2 4.00 FEET TO 4.99 FEET	JUNCTION BOX NO. 3 3.00 FEET TO 3.99 FEET	JUNCTION BOX NO. 4 3.00 FEET TO 3.99 FEET	
			UNITS USED		C.Y.	C.Y.	C.Y.	L.F.	L.F.	L.F.	L.F.	L.F.	L.F.	L.F.	EA.	EA.	EA.	EA.	EA.	EA.	EA.	EA.	EA.	EA.	EA.	EA.	
39	D.I. TYPE II	H-3 ℄ 406+70 (O/S 37.50' RT.)	H-3 ℄ 406+70 (O/S 37.50' RT.)	H-3 ℄ 404+90 (O/S 37.50' RT.)	161.3		52.6		180												1					
37	D.I. TYPE II	H-3 ℄ 404+90 (O/S 37.50' RT.)	H-3 ℄ 404+90 (O/S 37.50' RT.)	H-3 ℄ 403+10 (O/S 37.50' RT.)	184.2		60.8			180											1					
35	D.I. TYPE II	H-3 ℄ 403+10 (O/S 37.50' RT.)	H-3 ℄ 403+10 (O/S 37.50' RT.)	H-3 ℄ 401+30 (O/S 37.50' RT.)	183.4		60.8			180										1						
33	D.I. (SPECIAL)	H-3 ℄ 401+30 (O/S 37.50' RT.)	H-3 ℄ 401+30 (O/S 37.50' RT.)	H-3 ℄ 401+00 (O/S 82' RT.)	51.0		17.6						52													
32	D.I. TYPE II	H-3 ℄ 401+30 (O/S 37.50' LT.)	H-3 ℄ 401+30 (O/S 37.50' LT.)	H-3 ℄ 401+30 (O/S 37.50' RT.)	57.5		21.6		74											1						
34	D.I. TYPE II	H-3 ℄ 403+10 (O/S 37.50' LT.)	H-3 ℄ 403+10 (O/S 37.50' LT.)	H-3 ℄ 403+10 (O/S 37.50' RT.)	55.0		21.6		74											1						
36	D.I. TYPE II	H-3 ℄ 404+90 (O/S 37.50' LT.)	H-3 ℄ 404+90 (O/S 37.50' LT.)	H-3 ℄ 404+90 (O/S 37.50' RT.)	58.9		21.6		74											1						
38	D.I. TYPE II	H-3 ℄ 406+70 (O/S 37.50' LT.)	H-3 ℄ 406+70 (O/S 37.50' LT.)	H-3 ℄ 406+70 (O/S 37.50' RT.)	58.8		21.6		74											1						
40	D.I. TYPE II	H-3 ℄ 408+50 (O/S 37.50' LT.)	H-3 ℄ 408+50 (O/S 37.50' LT.)	H-3 ℄ 406+70 (O/S 37.50' LT.)	159.3		52.6		180											1						
41	D.I. TYPE II	H-3 ℄ 408+50 (O/S 37.82' RT.)	H-3 ℄ 408+50 (O/S 37.82' RT	H-3 ℄ 408+50 (O/S 37.50' LT.)	57.3		21.6		74											1						
42	D.I. TYPE II	H-3 ℄ 410+30 (O/S 37.50' LT.)	H-3 ℄ 410+30 (O/S 37.50' LT.)	H-3 ℄ 408+50 (O/S 37.50' LT.)	155.9		52.6		180											1						
43	D.I. TYPE II	H-3 ℄ 410+63 (O/S 38.88' RT.)	H-3 ℄ 410+63 (O/S 38.88' RT.)	H-3 ℄ 410+30 (O/S 37.50' LT.)	59.3		23.4		80												1					
44	D.I. (SPECIAL)	RAMP STA. 2+60 (O/S 15.00' LT.)	RAMP STA. 2+60 (O/S 15.00' LT.)	H-3 ℄ 410+30 (O/S 37.50' LT.)	185.7		49.7		170																	
45	D.I. TYPE II	H-3 ℄ 412+25 (O/S 39.69 RT.)	H-3 ℄ 412+25 (O/S 39.69' RT.)	RAMP STA. 2+60 (O/S 15.00' LT.)	99.4		25.7		88											1						
46	D.I. TYPE II	H-3 ℄ 413+40 (O/S 40.27' RT.)	H-3 ℄ 413+40 (O/S 40.27' RT.)	H-3 ℄ 412+25 (O/S 39.69' RT.)	130.1		33.6		115											1						
47	D.I. TYPE II	H-3 ℄ 413+80 (O/S 37.50' LT.)	H-3 ℄ 413+80 (O/S 37.50' LT.)	RAMP STA. 2+60 (O/S 15.00' LT.)	197.1		52.6		180											1						
	END OF PIPE	H-3 ℄ 415+05 (O/S 39.56' LT.)	H-3 ℄ 415+05 (O/S 39.56' LT.)	H-3 ℄ 413+80 (O/S 37.50' LT.)	134.7		36.5		125																	
SUBTOTAL SHEET D27					1988.9	0	626.5	0	1668	360	0	0	52	0	0	0	0	0	0	11	3	0	0	0	0	0	
TOTAL					4796.6	0	1432.5	0	3496	815	251	37	52	29	0	1	5	4	1	16	5	1	0	0	0	0	
ROUNDED TOTAL					4797	0	1433	0	3496	815	251	37	52	29	0	1	5	4	1	16	5	1	0	0	0	0	

REGINALD M. SUZUKA
REGISTERED PROFESSIONAL ENGINEER
No. 1462-C
HAWAII, U.S.A.

THIS WORK WAS PREPARED BY ME OR UNDER MY SUPERVISION

Reginald M. Suzuka
PARKINC
dba: PARK ENGINEERING

DATE	
SURVEY PLOTTED BY	
DRAWN BY	
TRACED BY	
DESIGNED BY	
QUANTITIES BY	
CHECKED BY	

ORIGINAL PLAN
NOTEBOOK
No.

STATE OF HAWAII
DEPARTMENT OF TRANSPORTATION
HIGHWAYS DIVISION

DRAINAGE ESTIMATED QUANTITIES

INTERSTATE ROUTE H-3
F.A.I. PROJECT NO. I-H3-1(59)

SCALE: NONE DATE: JUNE 1993

DATE	REVISION
9/30/93	REVISED DRAINAGE SUMMARY PER DRAINAGE PLAN.

SHEET No. D27 OF 32 SHEETS

ADD. 57

DRAEST3 9/29/93 GKI
PHASE-1A

DRAINAGE SUMMARY

FED. ROAD DIS. NO.	STATE	FED. AID PROJ. NO.	FISCAL YEAR	SHEET NO.	TOTAL SHEETS
HAWAII	HAW.	I-H3-1(59)	1993	ADD. 58	211

STRUCTURES			PIPE CULVERTS		ESTIMATED QUANTITIES																					REMARKS
			ITEM NO.		604	604	604	604	604	604	604	604	604	604	604	604	604	604	604	604	604	604	640	640	640	640	
					4980	4982	4984	4988	4992	4994	5000	5030	5032	5062	5100	5110	5120	5130	5140	5150	5160	5170	5020	5030	8000	8010	
NUMBER	TYPE	STATION	FROM	TO	DRAIN INLET NOS. 1 & 44 4.00 FEET TO 4.99 FEET	DRAIN INLET NOS. 19 & 33 5.00 FEET TO 5.99 FEET	DRAIN INLET NO. 22 6.00 FEET TO 6.99 FEET	DRAIN INLET NO. 13 23.00 FEET TO 23.99 FEET	TYPE 61614 DRAIN INLET 4.00 FEET TO 4.99 FEET	TYPE 61614 DRAIN INLET 5.00 FEET TO 5.99 FEET	TYPE 61614 DRAIN INLET 8.00 FEET TO 8.99 FEET	TYPE "D" DRAIN MANHOLE 4.00 FEET TO 4.99 FEET	TYPE "D" DRAIN MANHOLE 5.00 FEET TO 5.99 FEET	TYPE "E" DRAIN MANHOLE 7.00 FEET TO 7.99 FEET	OUTLET NO. 1	OUTLET NO. 2	OUTLET NO. 3	OUTLET NO. 4	OUTLET NO. 5	OUTLET NO. 6	OUTLET NO. 7	OUTLET NO. 8	2.0-FEET WIDE INVERT (SS 1/1) LINED TRAPEZOIDAL DRAINAGE DITCH	3.0-FEET WIDE INVERT LINED RECTANGULAR DRAINAGE DITCH	LINED DRAINAGE DITCH CONDITION "A"	LINED DRAINAGE DITCH CONDITION "B"	
			UNITS USED		EA.	EA.	EA.	EA.	EA.	EA.	EA.	EA.	EA.	EA.	EA.	EA.	EA.	EA.	EA.	EA.	EA.	EA.	L.F.	L.F.	L.F.	L.F.	
39	D.I. TYPE II	H-3 ℄ 406+70 (O/S 37.50' RT.)	H-3 ℄ 406+70 (O/S 37.50' RT.)	H-3 ℄ 404+90 (O/S 37.50' RT.)																							
37	D.I. TYPE II	H-3 ℄ 404+90 (O/S 37.50' RT.)	H-3 ℄ 404+90 (O/S 37.50' RT.)	H-3 ℄ 403+10 (O/S 37.50' RT.)																							
35	D.I. TYPE II	H-3 ℄ 403+10 (O/S 37.50' RT.)	H-3 ℄ 403+10 (O/S 37.50' RT.)	H-3 ℄ 401+30 (O/S 37.50' RT.)																							
33	D.I. (SPECIAL)	H-3 ℄ 401+30 (O/S 37.50' RT.)	H-3 ℄ 401+30 (O/S 37.50' RT.)	H-3 ℄ 401+00 (O/S 82' RT.)		1																					
32	D.I. TYPE II	H-3 ℄ 401+30 (O/S 37.50' LT.)	H-3 ℄ 401+30 (O/S 37.50' LT.)	H-3 ℄ 401+30 (O/S 37.50' RT.)																							
34	D.I. TYPE II	H-3 ℄ 403+10 (O/S 37.50' LT.)	H-3 ℄ 403+10 (O/S 37.50' LT.)	H-3 ℄ 403+10 (O/S 37.50' RT.)																							
36	D.I. TYPE II	H-3 ℄ 404+90 (O/S 37.50' LT.)	H-3 ℄ 404+90 (O/S 37.50' LT.)	H-3 ℄ 404+90 (O/S 37.50' RT.)																							
38	D.I. TYPE II	H-3 ℄ 406+70 (O/S 37.50' LT.)	H-3 ℄ 406+70 (O/S 37.50' LT.)	H-3 ℄ 406+70 (O/S 37.50' RT.)																							
40	D.I. TYPE II	H-3 ℄ 408+50 (O/S 37.50' LT.)	H-3 ℄ 408+50 (O/S 37.50' LT.)	H-3 ℄ 406+70 (O/S 37.50' LT.)								1															
41	D.I. TYPE II	H-3 ℄ 408+50 (O/S 37.82' RT.)	H-3 ℄ 408+50 (O/S 37.82' RT	H-3 ℄ 408+50 (O/S 37.50' LT.)																							
42	~~D.I. TYPE~~ II✱	H-3 ℄ 410+30 (O/S 37.50' LT.)	H-3 ℄ 410+30 (O/S 37.50' LT.)	H-3 ℄ 408+50 (O/S 37.50' LT.)																							
43	D.I. TYPE II	H-3 ℄ 410+63 (O/S 38.88' RT.)	H-3 ℄ 410+63 (O/S 38.88' RT.)	H-3 ℄ 410+30 (O/S 37.50' LT.)																							
44	~~D.I. (SPECIAL)~~✱	RAMP STA. 2+60 (O/S 15.00' LT.)	RAMP STA. 2+60 (O/S 15.00' LT.)	H-3 ℄ 410+30 (O/S 37.50' LT.)	1																						
45	D.I. TYPE II	H-3 ℄ 412+25 (O/S 39.69 RT.)	H-3 ℄ 412+25 (O/S 39.69' RT.)	RAMP STA. 2+60 (O/S 15.00' LT.)																							
46	D.I. TYPE II	H-3 ℄ 413+40 (O/S 40.27' RT.)	H-3 ℄ 413+40 (O/S 40.27' RT.)	H-3 ℄ 412+25 (O/S 39.69' RT.)																							
47	D.I. TYPE II	H-3 ℄ 413+80 (O/S 37.50' LT.)	H-3 ℄ 413+80 (O/S 37.50' LT.)	RAMP STA. 2+60 (O/S 15.00' LT.)																							
	END OF PIPE	H-3 ℄ 415+05 (O/S 39.56' LT.)	H-3 ℄ 415+05 (O/S 39.56' LT.)	H-3 ℄ 413+80 (O/S 37.50' LT.)																							
	✱SEE BELOW																										
SUBTOTAL SHEET D28					1	1	0	0	0	0	0	1	0	0	0	0	0	0	0	0	0	0	0	0	0	0	
TOTAL					2	2	1	1	3	2	2	3	2	1	0	0	0	0	0	0	0	0	0	0	0	0	
ROUNDED TOTAL					2	2	1	1	3	2	2	3	2	1	0	0	0	0	0	0	0	0	0	0	0	0	

D.I. No. 42 Changed to DMH No. 20, D.I. No. 44 Changed to DMH No. 21
Per NHIA Memo Dated 5/4/94. ✱✱

✱✱Project Files are Located at 727 Kakoi Street, Honolulu, Hawaii, 96819

REGINALD M. SUZUKA
REGISTERED PROFESSIONAL ENGINEER
No. 1462-C
HAWAII, U.S.A.

THIS WORK WAS PREPARED BY ME OR UNDER MY SUPERVISION
Reginald M. Suzuka
PARK-INC.
dba: PARK ENGINEERING

DATE	REVISION
9/30/93	REVISED DRAINAGE SUMMARY PER DRAINAGE PLAN.

DEPARTMENT OF TRANSPORTATION
HIGHWAYS DIVISION

DRAINAGE ESTIMATED QUANTITIES

INTERSTATE ROUTE H-3
F.A.I. PROJECT NO. I-H3-1(59)

SCALE: NONE DATE: JUNE 1993

SHEET No. D28 OF 32 SHEETS

ADD. 58

SURVEY PLOTTED BY
DRAWN BY
TRACED BY
DESIGNED BY
QUANTITIES BY
CHECKED BY
DATE
ORIGINAL PLAN
NOTEBOOK
No.

DRAEST3A 9/29/93 GKI
PHASE-1A

DRAINAGE SUMMARY

FED. ROAD DIS. NO.	STATE	FED. AID PROJ. NO.	FISCAL YEAR	SHEET NO.	TOTAL SHEETS
HAWAII	HAW.	I-H3-1(59)	1993	ADD. 59	211

STRUCTURES			PIPE CULVERTS		ESTIMATED QUANTITIES																					REMARKS
			ITEM NO.		206	207	603	603	603	603	603	603	603	603	604	604	604	604	604	604	604	604	604	604	604	
					2020	0110	0010	9000	9002	9004	9006	1010	1012	1014	4902	4912	4914	4916	4926	4932	4934	4942	4950	4951	4952	4953	
NUMBER	TYPE	STATION	FROM	TO	STRUCTURE EXCAVATION FOR DRAINAGE SYSTEM	DITCH EXCAVATION	BED COURSE MATERIAL FOR CULVERT	18-IN. REINF. CONC. PIPE, CL. III OR 18-IN. SPIRAL RIB METAL PIPE, SHEET THICKNESS, 0.075 INCH	24-IN. REINF. CONC. PIPE, CL. III OR 24-IN. SPIRAL RIB METAL PIPE, SHEET THICKNESS, 0.075 INCH	30-IN. REINF. CONC. PIPE, CL. III OR 30-IN. SPIRAL RIB METAL PIPE, SHEET THICKNESS, 0.075 INCH	36-IN. REINF. CONC. PIPE, CL. III OR 36-IN. SPIRAL RIB METAL PIPE, SHEET THICKNESS, 0.075 INCH	24-IN. REINF. CONC. PIPE, CLASS III	30-IN. REINF. CONC. PIPE, CLASS III	36-IN. REINF. CONC. PIPE, CLASS III	DROP INTAKE, TYPE A 5.00 FEET TO 5.99 FEET	TYPE I DRAIN INLET 4.00 FEET TO 4.99 FEET	TYPE I DRAIN INLET 5.00 FEET TO 5.99 FEET	TYPE I DRAIN INLET 6.00 FEET TO 6.99 FEET	TYPE I DRAIN INLET 11.00 FEET TO 11.99 FEET	TYPE II DRAIN INLET 4.00 FEET TO 4.99 FEET	TYPE II DRAIN INLET 5.00 FEET TO 5.99 FEET	TYPE II DRAIN INLET 9.00 FEET TO 9.99 FEET	JUNCTION BOX NO. 1 6.00 FEET TO 6.99 FEET	JUNCTION BOX NO. 2 4.00 FEET TO 4.99 FEET	JUNCTION BOX NO. 3 3.00 FEET TO 3.99 FEET	JUNCTION BOX NO. 4 3.00 FEET TO 3.99 FEET	
			UNITS USED		C.Y.	C.Y.	C.Y.	L.F.	L.F.	L.F.	L.F.	L.F.	L.F.	L.F.	EA.	EA.	EA.	EA.	EA.	EA.	EA.	EA.	EA.	EA.	EA.	
48	D.I. TYPE I	H-3 ℄ 413+80 (O/S 5.47' RT.)	H-3 ℄ 413+80 (O/S 5.47' RT.)	H-3 ℄ 413+80 (O/S 37.50' LT.)	50.3		12.6		43							1										
49	D.I. TYPE I	H-3 ℄ 414+20 (O/S 5.67' RT.)	H-3 ℄ 414+20 (O/S 5.67' RT.)	H-3 ℄ 413+80 (O/S 5.47' RT.)	46.4		11.7		40							1										
50	D.I. TYPE I	H-3 ℄ 414+60 (O/S 5.87' RT.)	H-3 ℄ 414+60 (O/S 5.87' RT.)	H-3 ℄ 414+20 (O/S 5.67' RT.)	47.0		11.7		40							1										
	END OF PIPE	H-3 ℄ 415+05 (O/S 5.92' RT.)	H-3 ℄ 415+05 (O/S 5.92' RT.)	H-3 ℄ 414+60 (O/S 5.87' RT.)	47.3		13.2		45																	
1	LINED DITCH		H-3 ℄ 399+66 (O/S 57' LT.)	H-3 ℄ 400+51 (O/S 226' LT.)		74.3																				
1	LINED DITCH		H-3 ℄ 400+51 (O/S 226' LT.)	H-3 ℄ 415+00 (O/S 56' LT.)		391.0																				
2	LINED DITCH		H-3 ℄ 400+92 (O/S 84' LT.)	H-3 ℄ 403+42 (O/S 74' LT.)																						
2	LINED DITCH		H-3 ℄ 403+42 (O/S 74' LT.)	H-3 ℄ 407+14 (O/S 58' LT.)																						
2	LINED DITCH		H-3 ℄ 407+14 (O/S 58' LT.)	H-3 ℄ 410+00 (O/S 45' LT.)																						
3	LINED DITCH		H-3 ℄ 400+92 (O/S 84' LT.)	RAMP STA. 13+83 (O/S 28' LT.)		5.6																				
4	LINED DITCH		H-3 ℄ 385+71 (O/S 62' RT.)	H-3 ℄ 386+76 (O/S 43' RT.)																						
1	JUNCTION BOX	H-3 ℄ 399+66 (O/S 57' LT.)	H-3 ℄ 399+66 (O/S 57' LT.)	H-3 ℄ 400+92 (O/S 84' LT.)	116.7		37.7					129											1			
2	JUNCTION BOX	H-3 ℄ 400+92 (O/S 84' LT.)			4.2																			1		
3	JUNCTION BOX	RAMP STA. 13+83 (O/S 28' LT.)			4.2																				1	
4	JUNCTION BOX	H-3 ℄ 385+71 (O/S 62' RT.)	H-3 ℄ 385+28 (O/S 48' RT.)	H-3 ℄ 385+71 (O/S 62' RT.)	30.0		17.9	72																		1
SUBTOTAL SHEET D29					346.1	470.9	104.8	72	168	0	0	129	0	0	0	3	0	0	0	0	0	0	1	1	1	1
TOTAL					5142.7	470.9	1537.3	72	3664	815	251	166	52	29	0	4	5	4	1	16	5	1	1	1	1	1
ROUNDED TOTAL					5143	471	1537	72	3664	815	251	166	52	29	0	4	5	4	1	16	5	1	1	1	1	1

REGINALD M SUZUKA
REGISTERED PROFESSIONAL ENGINEER
No. 1462-C
HAWAII, USA

THIS WORK WAS PREPARED BY ME OR UNDER MY SUPERVISION

Reginald M. Suzuka
PARK, INC.
dba: PARK ENGINEERING

DATE	SURVEY PLOTTED BY	DRAWN BY	TRACED BY	DESIGNED BY	QUANTITIES BY	CHECKED BY

ORIGINAL PLAN

NOTEBOOK No.

DATE	REVISION
9/30/93	REVISED DRAINAGE SUMMARY PER DRAINAGE PLAN.

STATE OF HAWAII
DEPARTMENT OF TRANSPORTATION
HIGHWAYS DIVISION

DRAINAGE ESTIMATED QUANTITIES

INTERSTATE ROUTE H-3
F.A.I. PROJECT NO. I-H3-1(59)

SCALE: NONE DATE: JUNE 1993

SHEET No. D29 OF 32 SHEETS

ADD. 59

DRAEST4 9/29/93 GKI
PHASE-1A

DRAINAGE SUMMARY

FED. ROAD DIS. NO.	STATE	FED. AID PROJ. NO.	FISCAL YEAR	SHEET NO.	TOTAL SHEETS
HAWAII	HAW.	I-H3-1(59)	1993	ADD. 60	211

STRUCTURES			PIPE CULVERTS		ESTIMATED QUANTITIES																					REMARKS
			ITEM NO.		604	604	604	604	604	604	604	604	604	604	604	604	604	604	604	604	604	604	640	640	640	640	
					4980	4982	4984	4988	4992	4994	5000	5030	5032	5062	5100	5110	5120	5130	5140	5150	5160	5170	5020	5030	8000	8010	
NUMBER	TYPE	STATION	FROM	TO	DRAIN INLET NOS. 1 & 44 4.00 FEET TO 4.99 FEET	DRAIN INLET NOS. 19 & 33 5.00 FEET TO 5.99 FEET	DRAIN INLET NO. 22 6.00 FEET TO 6.99 FEET	DRAIN INLET NO. 13 23.00 FEET TO 23.99 FEET	TYPE 61614 DRAIN INLET 4.00 FEET TO 4.99 FEET	TYPE 61614 DRAIN INLET 5.00 FEET TO 5.99 FEET	TYPE 61614 DRAIN INLET 8.00 FEET TO 8.99 FEET	TYPE "D" DRAIN MANHOLE 4.00 FEET TO 4.99 FEET	TYPE "D" DRAIN MANHOLE 5.00 FEET TO 5.99 FEET	TYPE "E" DRAIN MANHOLE 7.00 FEET TO 7.99 FEET	OUTLET NO. 1	OUTLET NO. 2	OUTLET NO. 3	OUTLET NO. 4	OUTLET NO. 5	OUTLET NO. 6	OUTLET NO. 7	OUTLET NO. 8	2.0-FEET WIDE INVERT (SS 1/1) LINED TRAPE-ZOIDAL DRAINAGE DITCH	3.0-FEET WIDE INVERT LINED RECTANGULAR DRAINAGE DITCH	LINED DRAINAGE DITCH CONDITION "A"	LINED DRAINAGE DITCH CONDITION "B"	
			UNITS USED		EA.	EA.	EA.	EA.	EA.	EA.	EA.	EA.	EA.	EA.	EA.	EA.	EA.	EA.	EA.	EA.	EA.	EA.	L.F.	L.F.	L.F.	L.F.	
48	D.I. TYPE I	H-3 ℄ 413+80 (O/S 5.47' RT.)	H-3 ℄ 413+80 (O/S 5.47' RT.)	H-3 ℄ 413+80 (O/S 37.50' LT.)																							
49	D.I. TYPE I	H-3 ℄ 414+20 (O/S 5.67' RT.)	H-3 ℄ 414+20 (O/S 5.67' RT.)	H-3 ℄ 413+80 (O/S 5.47' RT.)																							
50	D.I. TYPE I	H-3 ℄ 414+60 (O/S 5.87' RT.)	H-3 ℄ 414+60 (O/S 5.87' RT.)	H-3 ℄ 414+20 (O/S 5.67' RT.)																							
	END OF PIPE	H-3 ℄ 415+05 (O/S 5.92' RT.)	H-3 ℄ 415+05 (O/S 5.92' RT.)	H-3 ℄ 414+60 (O/S 5.87' RT.)																							
1	LINED DITCH		H-3 ℄ 399+66 (O/S 57' LT.)	H-3 ℄ 400+51 (O/S 226' LT.)																				223			
1	LINED DITCH		H-3 ℄ 400+51 (O/S 226' LT.)	H-3 ℄ 415+00 (O/S 56' LT.)																			1463				
2	LINED DITCH		H-3 ℄ 400+92 (O/S 84' LT.)	H-3 ℄ 403+42 (O/S 74' LT.)																					250		
2	LINED DITCH		H-3 ℄ 403+42 (O/S 74' LT.)	H-3 ℄ 407+14 (O/S 58' LT.)																						372	
2	LINED DITCH		H-3 ℄ 407+14 (O/S 58' LT.)	H-3 ℄ 410+00 (O/S 45' LT.)																					286		
3	LINED DITCH		H-3 ℄ 400+92 (O/S 84' LT.)	RAMP STA. 13+83 (O/S 28' LT.)																				50			
4	LINED DITCH		H-3 ℄ 385+71 (O/S 62' RT.)	H-3 ℄ 386+76 (O/S 43' RT.)																						110	
1	JUNCTION BOX	H-3 ℄ 399+66 (O/S 57' LT.)	H-3 ℄ 399+66 (O/S 57' LT.)	H-3 ℄ 400+92 (O/S 84' LT.)																							
2	JUNCTION BOX	H-3 ℄ 400+92 (O/S 84' LT.)																									
3	JUNCTION BOX	RAMP STA. 13+83 (O/S 28' LT.)																									
4	JUNCTION BOX	H-3 ℄ 385+71 (O/S 62' RT.)	H-3 ℄ 385+28 (O/S 48' RT.)	H-3 ℄ 385+71 (O/S 62' RT.)																							
SUBTOTAL SHEET D30					0	0	0	0	0	0	0	0	0	0	0	0	0	0	0	0	0	0	1463	273	536	482	
TOTAL					2	2	1	1	3	2	2	3	2	1	0	0	0	0	0	0	0	0	1463	273	536	482	
ROUNDED TOTAL					2	2	1	1	3	2	2	3	2	1	0	0	0	0	0	0	0	0	1463	273	536	482	

REGINALD M. SUZUKA
REGISTERED PROFESSIONAL ENGINEER
No. 1462-C
HAWAII, U.S.A.

THIS WORK WAS PREPARED BY ME OR UNDER MY SUPERVISION

Reginald M. Suzuka
PorEx, INC.
dba: PARK ENGINEERING

DATE	REVISION
9/30/93	REVISED DRAINAGE SUMMARY PER DRAINAGE PLAN.

STATE OF HAWAII
DEPARTMENT OF TRANSPORTATION
HIGHWAYS DIVISION

DRAINAGE ESTIMATED QUANTITIES

INTERSTATE ROUTE H-3
F.A.I. PROJECT NO. I-H3-1(59)

SCALE: NONE DATE: JUNE 1993

SHEET No. D30 OF 32 SHEETS

ADD. 60

ORIGINAL PLAN | NOTEBOOK No. ____
SURVEY PLOTTED BY ____ DATE ____
DRAWN BY ____
TRACED BY ____
TYPEWRITTEN BY ____
QUANTITIES BY ____
CHECKED BY ____

DRAEST4A 9/29/93 GKI
PHASE-1A

FED. ROAD DIS. NO.	STATE	FED. AID PROJ. NO.	FISCAL YEAR	SHEET NO.	TOTAL SHEETS
HAWAII	HAW.	I-H3-1(59)	1993	ADD. 61	211

DRAINAGE SUMMARY

STRUCTURES			PIPE CULVERTS		ESTIMATED QUANTITIES																					REMARKS
			ITEM NO.		206	207	603	603	603	603	603	603	603	603	604	604	604	604	604	604	604	604	604	604	604	
					2020	0110	0010	9000	9002	9004	9006	1010	1012	1014	4902	4912	4914	4916	4926	4932	4934	4942	4950	4951	4952	4953	
NUMBER	TYPE	STATION	FROM	TO	STRUCTURE EXCAVATION FOR DRAINAGE SYSTEM	DITCH EXCAVATION	BED COURSE MATERIAL FOR CULVERT	18-IN. REINF. CONC. PIPE, CL. III OR 18-IN. SPIRAL RIB METAL PIPE, SHEET THICKNESS, 0.075 INCH	24-IN. REINF. CONC. PIPE, CL. III OR 24-IN. SPIRAL RIB METAL PIPE, SHEET THICKNESS, 0.075 INCH	30-IN. REINF. CONC. PIPE, CL. III OR 30-IN. SPIRAL RIB METAL PIPE, SHEET THICKNESS, 0.075 INCH	36-IN. REINF. CONC. PIPE CL. III OR 36-IN. SPIRAL RIB METAL PIPE, SHEET THICKNESS, 0.075 INCH	24-IN. REINF. CONC. PIPE, CLASS III	30-IN. REINF. CONC. PIPE, CLASS III	36-IN. REINF. CONC. PIPE, CLASS III	DROP INTAKE, TYPE A 5.00 FEET TO 5.99 FEET	TYPE I DRAIN INLET 4.00 FEET TO 4.99 FEET	TYPE I DRAIN INLET 5.00 FEET TO 5.99 FEET	TYPE I DRAIN INLET 6.00 FEET TO 6.99 FEET	TYPE I DRAIN INLET 11.00 FEET TO 11.99 FEET	TYPE II DRAIN INLET 4.00 FEET TO 4.99 FEET	TYPE II DRAIN INLET 5.00 FEET TO 5.99 FEET	TYPE II DRAIN INLET 9.00 FEET TO 9.99 FEET	JUNCTION BOX NO. 1 6.00 FEET TO 6.99 FEET	JUNCTION BOX NO. 2 4.00 FEET TO 4.99 FEET	JUNCTION BOX NO. 3 3.00 FEET TO 3.99 FEET	JUNCTION BOX NO. 4 3.00 FEET TO 3.99 FEET	
			UNITS USED		C.Y.	C.Y.	C.Y.	L.F.	L.F.	L.F.	L.F.	L.F.	L.F.	L.F.	EA.	EA.	EA.	EA.	EA.	EA.	EA.	EA.	EA.	EA.	EA.	EA.	
1	OUTLET	H-3 ℄ 376+20 (O/S 173' LT.)																								
2	OUTLET	H-3 ℄ 383+30 (O/S 75' LT.)																								
3	OUTLET	H-3 ℄ 388+91 (O/S 108' LT.)																								
4	OUTLET	H-3 ℄ 399+17 (O/S 14'LT.)	H-3 ℄ 399+17 (O/S 14'LT.)	H-3 ℄ 399+66 (O/S 57'LT.)	58.9		25.8							67												
5	OUTLET	H-3 ℄ 401+00 (O/S 82' RT.)																								
6	OUTLET	C.A.R. STA. 19+41 (O/S 12' LT.)																								
7	OUTLET	C.A.R. STA. 21+02 (O/S 50' RT.)																								
8	OUTLET	H-3 ℄ 385+28 (O/S 48' RT.)																								
3	DROP INTAKE TYPE "A"	C.A.R. STA. 18+75 (O/S 24' RT.)	C.A.R. STA. 18+75 (O/S 24' RT.)	C.A.R. STA. 19+41 (O/S 12' LT.)	56.9		22.5		77						1											
4	DROP INTAKE TYPE "A"	C.A.R. STA. 21+16 (O/S 25' RT.)	C.A.R. STA. 21+16 (O/S 25' RT.)	C.A.R. STA. 21+02 (O/S 50' RT.)	16.6		9.9		34						1											
SUBTOTAL SHEET D31					132.4	0	58.2	0	111	0	0	0	0	67	2	0	0	0	0	0	0	0	0	0	0	0
TOTAL					5275.1	470.9	1595.5	72	3775	815	251	166	52	96	2	4	5	4	1	16	5	1	1	1	1	1
ROUNDED TOTAL					5275	471	1596	72	3775	815	251	166	52	96	2	4	5	4	1	16	5	1	1	1	1	1

REGINALD M. SUZUKA
REGISTERED PROFESSIONAL ENGINEER
No. 1462-C
HAWAII, U.S.A.

THIS WORK WAS PREPARED BY ME OR UNDER MY SUPERVISION

Reginald M. Suzuka
PorEx, INC.
dba: PARK ENGINEERING

STATE OF HAWAII
DEPARTMENT OF TRANSPORTATION
HIGHWAYS DIVISION

DRAINAGE ESTIMATED QUANTITIES

INTERSTATE ROUTE H-3
F.A.I. PROJECT NO. I-H3-1(59)

SCALE: NONE DATE: JUNE 1993

SHEET No. D31 OF 32 SHEETS

DATE	REVISION
9/30/93	REVISED DRAINAGE SUMMARY PER DRAINAGE PLAN.

ADD. 61

ORIGINAL PLAN
NOTEBOOK No.
SURVEY PLOTTED BY
DRAWN BY
TRACED BY
DESIGNED BY
QUANTITIES BY
CHECKED BY
DATE

DRAEST5 9/29/93 GKI
PHASE-1A

DRAINAGE SUMMARY

FED. ROAD DIS. NO.	STATE	FED. AID PROJ. NO.	FISCAL YEAR	SHEET NO.	TOTAL SHEETS
HAWAII	HAW.	I-H3-1(59)	1993	ADD. 62	211

STRUCTURES			PIPE CULVERTS		ESTIMATED QUANTITIES																					REMARKS
			ITEM NO.		604 4980	604 4982	604 4984	604 4988	604 4992	604 4994	604 5000	604 5030	604 5032	604 5062	604 5100	604 5110	604 5120	604 5130	604 5140	604 5150	604 5160	604 5170	640 5020	640 5030	640 8000	640 8010	
NUMBER	TYPE	STATION	FROM	TO	DRAIN INLET NOS. 1 & 44 4.00 FEET TO 4.99 FEET	DRAIN INLET NOS. 19 & 33 5.00 FEET TO 5.99 FEET	DRAIN INLET NO. 22 6.00 FEET TO 6.99 FEET	DRAIN INLET NO. 13 23.00 FEET TO 23.99 FEET	TYPE 61614 DRAIN INLET 4.00 FEET TO 4.99 FEET	TYPE 61614 DRAIN INLET 5.00 FEET TO 5.99 FEET	TYPE 61614 DRAIN INLET 8.00 FEET TO 8.99 FEET	TYPE "D" DRAIN MANHOLE 4.00 FEET TO 4.99 FEET	TYPE "D" DRAIN MANHOLE 5.00 FEET TO 5.99 FEET	TYPE "E" DRAIN MANHOLE 7.00 FEET TO 7.99 FEET	OUTLET NO. 1	OUTLET NO. 2	OUTLET NO. 3	OUTLET NO. 4	OUTLET NO. 5	OUTLET NO. 6	OUTLET NO. 7	OUTLET NO. 8	2.0-FEET WIDE INVERT (SS 1/1) LINED TRAPE-ZOIDAL DRAINAGE DITCH	3.0-FEET WIDE INVERT LINED RECTANGULAR DRAINAGE DITCH	LINED DRAINAGE DITCH CONDITION "A"	LINED DRAINAGE DITCH CONDITION "B"	
			UNITS USED		EA.	EA.	EA.	EA.	EA.	EA.	EA.	EA.	EA.	EA.	EA.	EA.	EA.	EA.	EA.	EA.	EA.	EA.	L.F.	L.F.	L.F.	L.F.	
1	OUTLET	H-3 ℄ 376+20 (O/S 173' LT.)													1												
2	OUTLET	H-3 ℄ 383+30 (O/S 75' LT.)														1											
3	OUTLET	H-3 ℄ 388+91 (O/S 108' LT.)															1										
4	OUTLET	H-3 ℄ 399+17 (O/S 14'LT.)	H-3 ℄ 399+17 (O/S 14'LT.)	H-3 ℄ 399+66 (O/S 57'LT.)														1									
5	OUTLET	H-3 ℄ 401+00 (O/S 82' RT.)																	1								
6	OUTLET	C.A.R. STA. 19+41 (O/S 12' LT.)																		1							
7	OUTLET	C.A.R. STA. 21+02 (O/S 50' RT.)																			1						
8	OUTLET	H-3 ℄ 385+28 (O/S 48' RT.)																				1					
3	DROP INTAKE TYPE "A"	C.A.R. STA. 18+75 (O/S 24' RT.)	C.A.R. STA. 18+75 (O/S 24' RT.)	C.A.R. STA. 19+41 (O/S 12' LT.)																							
4	DROP INTAKE TYPE "A"	C.A.R. STA. 21+16 (O/S 25' RT.)	C.A.R. STA. 21+16 (O/S 25' RT.)	C.A.R. STA. 21+02 (O/S 50' RT.)																							
SUBTOTAL SHEET D32					0	0	0	0	0	0	0	0	0	0	1	1	1	1	1	1	1	1	0	0	0	0	
TOTAL					2	2	1	1	3	2	2	3	2	1	1	1	1	1	1	1	1	1	1463	273	536	482	
ROUNDED TOTAL					2	2	1	1	3	2	2	3	2	1	1	1	1	1	1	1	1	1	1463	273	536	482	

REGINALD M SUZUKA
REGISTERED PROFESSIONAL ENGINEER
No. 1462-C
HAWAII, USA

THIS WORK WAS PREPARED BY ME OR UNDER MY SUPERVISION

Reginald M. Suzuka
PorEn, INC.
dba: PARK ENGINEERING

DATE	
SURVEY PLOTTED BY	
TRACED BY	
DESIGNED BY	
QUANTITIES BY	
CHECKED BY	
ORIGINAL PLAN	
NOTEBOOK	No.

STATE OF HAWAII
DEPARTMENT OF TRANSPORTATION
HIGHWAYS DIVISION

DRAINAGE ESTIMATED QUANTITIES

INTERSTATE ROUTE H-3
F.A.I. PROJECT NO. I-H3-1(59)

SCALE: NONE DATE: JUNE 1993

SHEET No. D32 OF 32 SHEETS

DATE	REVISION
9/30/93	REVISED DRAINAGE SUMMARY PER GRADING PLAN.

ADD. 62

DRAEST5A 9/29/93 GKI
PHASE-1A

FED. ROAD DIS. NO.	STATE	FED. AID PROJ. NO.	FISCAL YEAR	SHEET NO.	TOTAL SHEETS
HAWAII	HAW.	I-H3-1(59)	1993	ADD. 62S-1	211

DRAINAGE SUMMARY

ESTIMATED QUANTITIES

ITEM NO.		605	
		0006	
UNITS USED		L.F.	
UNDERDRAINS		6-INCH PERFORATED UNDERDRAIN PIPE	
BASELINE STAITON FROM	TO		
374+45 (LT.)	376+15 (RT.)	75	
374+40 (RT.)	376+15 (RT.)	170	
376+20 (RT.)	377+95 (RT.)	175	
378+00 (RT.)	379+75 (RT.)	175	
379+80 (RT.)	381+40 (RT.)	160	
381+45 (RT.)	383+25 (RT.)	180	
382+85 (LT.)	383+25 (LT.)	40	
383+30 (LT.)	384+95 (LT.)	165	
383+30 (RT.)	384+60 (RT.)	130	
385+52 (RT.)	385+90 (LT.)	85	
385+90 (LT.)	388+05 (LT.)	215	
386+75 (RT.)	387+65 (RT.)	90	
387+70 (RT.)	389+45 (RT.)	175	
388+10 (LT.)	389+45 (LT.)	135	
389+50 (LT.)	391+25 (LT.)	175	
389+50 (RT.)	391+25 (RT.)	175	
391+30 (LT.)	393+05 (LT.)	175	
391+30 (RT.)	393+05 (RT.)	175	
393+10 (LT.)	394+85 (LT.)	175	
393+10 (RT.)	394+85 (RT.)	175	
394+90 (LT.)	396+65 (LT.)	175	
394+90 (RT.)	396+65 (RT.)	175	
396+70 (LT.)	397+95 (LT.)	125	
396+70 (RT.)	397+95 (RT.)	125	
401+30 (LT.)	401+30 (RT.)	65	
401+30 (LT.)	403+05 (LT.)	175	
401+30 (RT.)	403+05 (RT.)	175	
403+10 (LT.)	404+85 (LT.)	175	
SUB-TOTAL		4210	

ESTIMATED QUANTITIES

ITEM NO.		605	
		0006	
UNITS USED		L.F.	
UNDERDRAINS		6-INCH PERFORATED UNDERDRAIN PIPE	
BASELINE STAITON FROM	TO		
403+10 (RT.)	404+85 (RT.)	175	
404+90 (LT.)	406+65 (LT.)	175	
404+90 (RT.)	406+65 (RT.)	175	
406+70 (LT.)	408+45 (LT.)	175	
406+70 (RT.)	408+45 (RT.)	175	
408+50 (LT.)	410+25 (LT.)	175	
408+50 (RT.)	410+58 (RT.)	208	
410+30 (LT.)	411+95 (LT.)	165	
410+63 (RT.)	412+20 (RT.)	157	
RAMP STA. 2+60	413+75 (LT.)	175	
412+25 (RT.)	413+35 (RT.)	110	
413+40 (RT.)	413+83 (RT.)	43	
413+80 (LT.)	415+05 (LT.)	125	
SUB-TOTAL		2033	
TOTAL		6243	
ROUNDED TOTAL		6240	

ESTIMATED QUANTITIES

ITEM NO.		605	605	
		0106	2000	
UNITS USED		L.F.	EA.	
CLEANOUTS		6-INCH NON-PERFORATED UNDERDRAIN PIPE (INCL. 45° ELBOWS)	CLEANOUT	
BASELINE STATION				
374+45 (LT.)		6	1	
376+15 (RT.)		6	1	
377+95 (RT.)		6	1	
379+75 (RT.)		6	1	
381+40 (RT.)		6	1	
383+25 (LT.)		6	1	
383+25 (RT.)		6	1	
384+60 (RT.)		6	1	
384+95 (LT.)		6	1	
385+52 (RT.)		6	1	
387+65 (RT.)		6	1	
388+05 (LT.)		6	1	
389+45 (LT.)		6	1	
389+45 (RT.)		6	1	
391+25 (LT.)		6	1	
391+25 (RT.)		6	1	
393+05 (LT.)		6	1	
393+05 (RT.)		6	1	
394+85 (LT.)		6	1	
394+85 (RT.)		6	1	
396+65 (LT.)		6	1	
396+65 (RT.)		6	1	
397+95 (LT.)		6	1	
397+95 (RT.)		6	1	
401+30 (LT.)		6	1	
403+05 (LT.)		6	1	
403+05 (RT.)		6	1	
SUB-TOTAL		162	27	

ESTIMATED QUANTITIES

ITEM NO.		605	605	
		0106	2000	
UNITS USED		L.F.	EA.	
CLEANOUTS		6-INCH NON-PERFORATED UNDERDRAIN PIPE (INCL. 45° ELBOWS)	CLEANOUT	
BASELINE STATION				
404+85 (LT.)		6	1	
404+85 (RT.)		6	1	
406+65 (LT.)		6	1	
406+65 (RT.)		6	1	
408+45 (LT.)		6	1	
408+45 (RT.)		6	1	
410+25 (LT.)		6	1	
410+58 (RT.)		6	1	
411+95 (LT.)		6	1	
412+20 (RT.)		6	1	
413+35 (RT.)		6	1	
413+75 (LT.)		6	1	
413+83 (RT.)		6	1	
SUB-TOTAL		78	13	
TOTAL		240	40	
ROUND TOT.		240	40	

REGINALD M. SUZUKA
REGISTERED PROFESSIONAL ENGINEER
No. 1462-C
HAWAII, U.S.A.

THIS WORK WAS PREPARED BY ME OR UNDER MY SUPERVISION

Reginald M. Suzuka

PorEx INC.
dba: PARK ENGINEERING

DATE	REVISION
9/30/93	ADDED DRAINAGE SUMMARY SHEET.

STATE OF HAWAII
DEPARTMENT OF TRANSPORTATION
HIGHWAYS DIVISION

DRAINAGE ESTIMATED QUANTITIES

INTERSTATE ROUTE H-3
F.A.I. PROJECT NO. I-H3-1(59)

SCALE: NONE DATE: SEPT. 1993

SHEET No. D33A OF 33 SHEETS

ADD. 62S-1

SURVEY PLOTTED BY
TRACED BY
DESIGNED BY
QUANTITIES BY
CHECKED BY
DATE

ORIGINAL PLAN
NOTEBOOK No.