| FED. ROAD DIST. NO. | STATE | FED. AID PROJ. NO. | FISCAL YEAR | SHEET NO. | TOTAL SHEETS |
|---|---|---|---|---|---|
| HAWAII | HAW | I-H3-1(66) | 1992 | 399 | 440 |

## NOTES:

1. WORK IN THIS CONTRACT IS SHOWN BY SOLID LINES.
2. WORK IN PREVIOUS CONTRACTS IS SHOWN BY SCREENED DELINEATION.
3. FOR PAVEMENT MARKER DETAILS, SEE SHEET NO. TX9.
4. FOR SIGNING DETAILS, SEE SHEET NO. TX10 & TX11.
5. FOR SIGN MOUNTING DETAILS, SEE SHEET NO. TX12.
6. FIRE ZONE SIGNS ARE VIEWED AS INSTALLED.

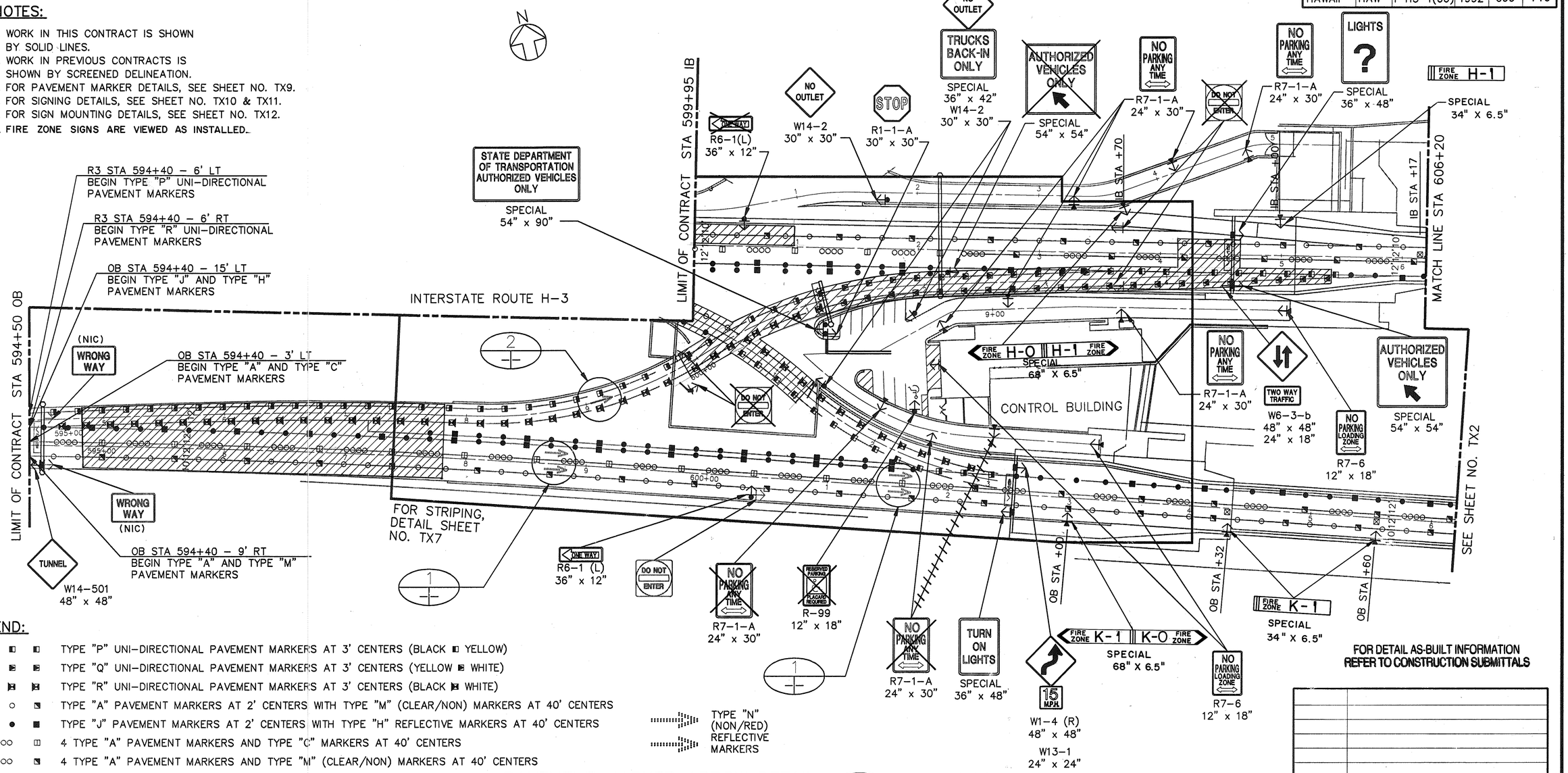


## LEGEND:

- TYPE "P" UNI-DIRECTIONAL PAVEMENT MARKERS AT 3' CENTERS (BLACK ◧ YELLOW)
- TYPE "Q" UNI-DIRECTIONAL PAVEMENT MARKERS AT 3' CENTERS (YELLOW ◨ WHITE)
- TYPE "R" UNI-DIRECTIONAL PAVEMENT MARKERS AT 3' CENTERS (BLACK ◪ WHITE)
- TYPE "A" PAVEMENT MARKERS AT 2' CENTERS WITH TYPE "M" (CLEAR/NON) MARKERS AT 40' CENTERS
- TYPE "J" PAVEMENT MARKERS AT 2' CENTERS WITH TYPE "H" REFLECTIVE MARKERS AT 40' CENTERS
- 4 TYPE "A" PAVEMENT MARKERS AND TYPE "C" MARKERS AT 40' CENTERS
- 4 TYPE "A" PAVEMENT MARKERS AND TYPE "M" (CLEAR/NON) MARKERS AT 40' CENTERS
- TYPE "O" REFLECTIVE PAVEMENT MARKERS
- PAVEMENT MARKER ARROW
- FIXED MESSAGE SIGN – MESSAGE ON BOTH FRONT AND BACK
- FIXED MESSAGE SIGN – SIGN BRIDGE MOUNTED
- FIXED MESSAGE SIGN – WALL MOUNTED
- FIXED MESSAGE SIGN – POST MOUNTED
- CHANGEABLE MESSAGE SIGN
- FIXED MESSAGE SIGN (NIC)
- CHANGEABLE MESSAGE SIGN (NIC)
- VMS VARIABLE MESSAGE SIGN (NIC)

TYPE "N" (NON/RED) REFLECTIVE MARKERS

PAVEMENT MARKER ARROW DETAIL 1

NTS

TYPE "N" (NON/RED) REFLECTIVE MARKERS

PAVEMENT MARKER ARROW DETAIL 2

NTS

## LEGEND:

- PAVEMENT MARKERS NOT INSTALLED
- SIGNS NOT INSTALLED

GRAPHIC SCALE:
40' 20' 0' 40' 80'
1" = 40'-0"

STANLEY M. O. T. CHING
REGISTERED PROFESSIONAL ENGINEER
No. 6312-C
HAWAII, U.S.A.

THIS WORK WAS PREPARED BY ME OR UNDER MY SUPERVISION

Stanley M.O.T. Ching

FOR DETAIL AS-BUILT INFORMATION REFER TO CONSTRUCTION SUBMITTALS

| DATE | REVISION |
|---|---|
| 1/14/94 | REV. FIRE ZONE SIGNS PER DCN 66-028 |

STATE OF HAWAII
DEPARTMENT OF TRANSPORTATION
HIGHWAYS DIVISION

# HALAWA CROSSOVER PLAN

SIGNING & STRIPING

INTERSTATE ROUTE H-3
F.A.I. PROJ. NO. I-H3-1(66)

SCALE: 1" = 40'-0" DATE: APR 1992

SHEET NO. TX1 OF 12 SHEETS

| ORIGINAL PLAN | | DATE |
|---|---|---|
| | SURVEY PLOTTED BY | |
| | DRAWN BY CADD | 12/12/91 |
| NOTEBOOK | TRACED BY N. TRAN | 12/09/91 |
| | DESIGNED BY | |
| | QUANTITIES BY | |
| No. | CHECKED BY D. MCCORMICK | 12/12/91 |

H3-6tx1 -H3\C6 -03-25-92

| FED. ROAD DIST. NO. | STATE | FED. AID PROJ. NO. | FISCAL YEAR | SHEET NO. | TOTAL SHEETS |
|---|---|---|---|---|---|
| HAWAII | HAW | I-H3-1(66) | 1992 | 400 | 440 |

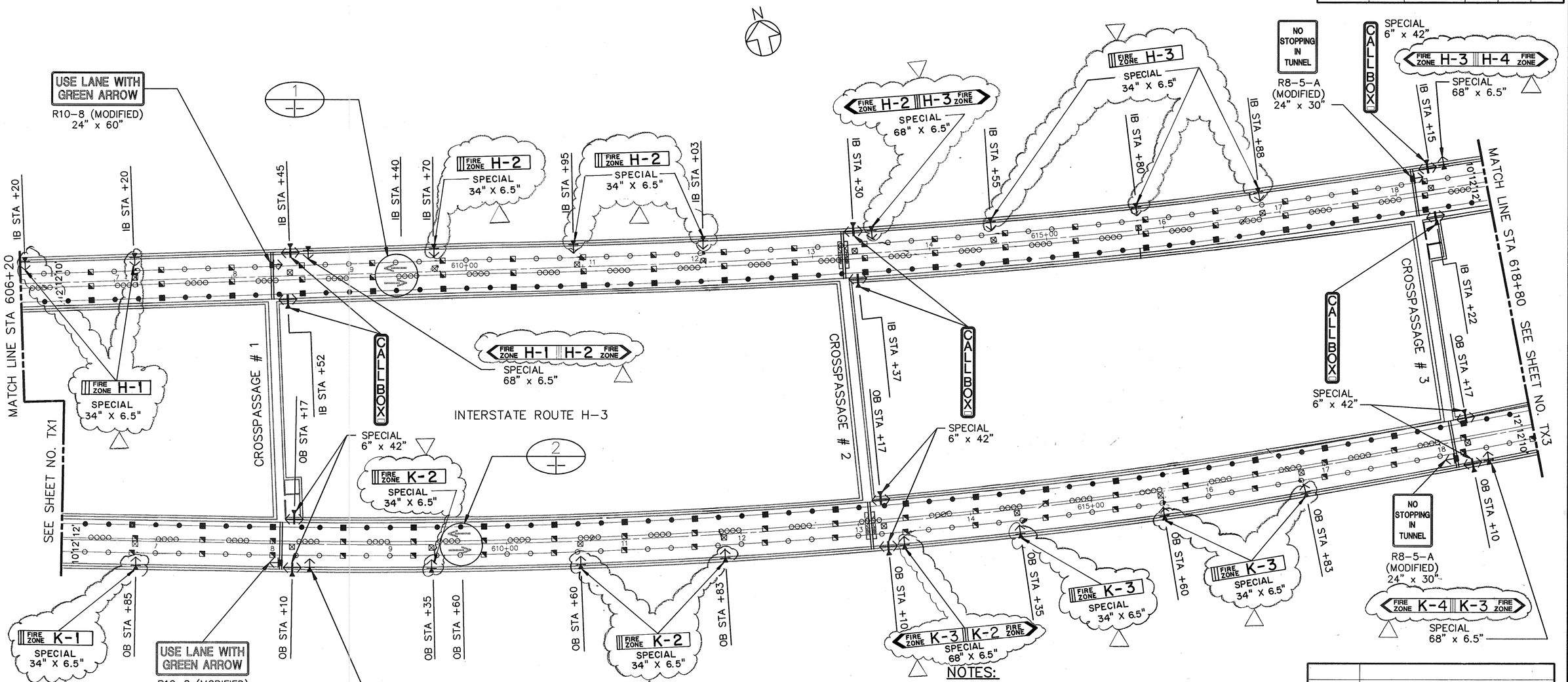


TYPE "N" (RED/NON) REFLECTIVE MARKERS
TYPE "M" CLEAR/NON REFLECTIVE MARKERS

## PAVEMENT MARKER ARROW DETAIL 1

NTS

TYPE "M" CLEAR/NON REFLECTIVE MARKERS
TYPE "N" (RED/NON) REFLECTIVE MARKERS

## PAVEMENT MARKER ARROW DETAIL 2

NTS

## NOTES:

1. WORK IN THIS CONTRACT IS SHOWN BY SOLID LINES.
2. WORK IN PREVIOUS CONTRACTS IS SHOWN BY SCREENED DELINEATION.
3. FOR LEGEND, SEE SHEET NO. TX1.
4. FOR PAVEMENT MARKER DETAILS, SEE SHEET NO. TX9.
5. FOR SIGNING DETAILS, SEE SHEET NO. TX10 & TX11.
6. FOR SIGN MOUNTING DETAILS, SEE SHEET NO. TX12.
7. FIRE ZONE SIGNS ARE VIEWED AS INSTALLED.

GRAPHIC SCALE:
40' 20' 0' 40' 80'
1" = 40'-0"

STANLEY M. O. T. CHING
REGISTERED PROFESSIONAL ENGINEER
No. 6312-C
HAWAII, U.S.A.

THIS WORK WAS PREPARED BY ME OR UNDER MY SUPERVISION

Stanley M.O.T. Ching

| DATE | REVISION |
|---|---|
| 1/14/94 | REV. FIRE ZONE SIGNS PER DCN 66-028 |

STATE OF HAWAII
DEPARTMENT OF TRANSPORTATION
HIGHWAYS DIVISION

# TUNNEL PLAN – 1

SIGNING & STRIPING

INTERSTATE ROUTE H-3

F.A.I. PROJ. NO. I-H3-1(66)

SCALE: 1" = 40'-0" DATE: APR 1992

SHEET NO. TX2 OF 12 SHEETS

| ORIGINAL PLAN | | DATE |
|---|---|---|
| | SURVEY PLOTTED BY: CADD | 12/12/91 |
| | DRAWN BY: | |
| NOTEBOOK | TRACED BY: N. TRAN | 12/07/91 |
| | DESIGNED BY: | |
| No. | QUANTITIES BY: D. MCCORMICK | 12/12/91 |
| | CHECKED BY: | |

H3-6TX2 -H3\C6 -03-25-92

| FED. ROAD DIST. NO. | STATE | FED. AID PROJ. NO. | FISCAL YEAR | SHEET NO. | TOTAL SHEETS |
|---|---|---|---|---|---|
| HAWAII | HAW | I-H3-1(66) | 1992 | 401 | 440 |

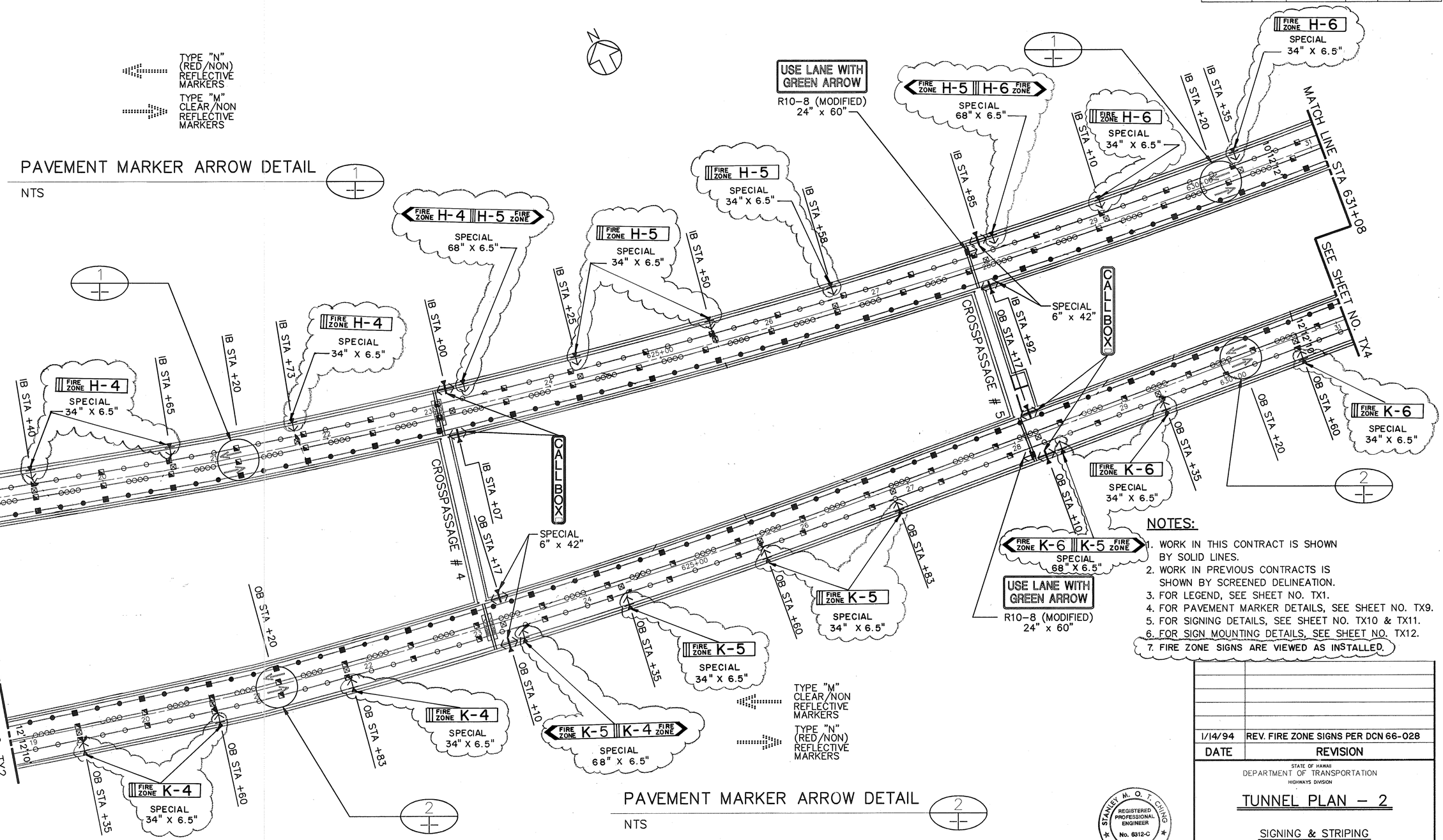


## NOTES:

1. WORK IN THIS CONTRACT IS SHOWN BY SOLID LINES.
2. WORK IN PREVIOUS CONTRACTS IS SHOWN BY SCREENED DELINEATION.
3. FOR LEGEND, SEE SHEET NO. TX1.
4. FOR PAVEMENT MARKER DETAILS, SEE SHEET NO. TX9.
5. FOR SIGNING DETAILS, SEE SHEET NO. TX10 & TX11.
6. FOR SIGN MOUNTING DETAILS, SEE SHEET NO. TX12.
7. FIRE ZONE SIGNS ARE VIEWED AS INSTALLED.

| DATE | REVISION |
|---|---|
| 1/14/94 | REV. FIRE ZONE SIGNS PER DCN 66-028 |

GRAPHIC SCALE:
40' 20' 0' 40' 80'
1" = 40'-0"

STANLEY M. O. T. CHING
REGISTERED PROFESSIONAL ENGINEER
No. 6312-C
HAWAII, U.S.A.

THIS WORK WAS PREPARED BY ME OR UNDER MY SUPERVISION
Stanley M.O.T. Ching

STATE OF HAWAII
DEPARTMENT OF TRANSPORTATION
HIGHWAYS DIVISION

# TUNNEL PLAN - 2

SIGNING & STRIPING

INTERSTATE ROUTE H-3

F.A.I. PROJ. NO. I-H3-1(66)

SCALE: 1" = 40'-0" DATE: APR 1992

SHEET NO. TX3 OF 12 SHEETS

| ORIGINAL PLAN | | DATE |
|---|---|---|
| | SURVEY PLOTTED BY | |
| | DRAWN BY | 12/12/91 |
| | TRACED BY | 12/10/91 |
| NOTEBOOK | DESIGNED BY N. TRAN | |
| | QUANTITIES BY | |
| No. | CHECKED BY D. MCCORMICK | 12/12/91 |

H3-6TX3 -H3\C6 -03-25-92

| FED. ROAD DIST. NO. | STATE | FED. AID PROJ. NO. | FISCAL YEAR | SHEET NO. | TOTAL SHEETS |
|---|---|---|---|---|---|
| HAWAII | HAW | I-H3-1(66) | 1992 | 402 | 440 |

TYPE "N" (RED/NON) REFLECTIVE MARKERS

TYPE "M" (CLEAR/NON) REFLECTIVE MARKERS

PAVEMENT MARKER ARROW DETAIL (1)

NTS

TYPE "M" (CLEAR/NON) REFLECTIVE MARKERS

TYPE "N" (RED/NON) REFLECTIVE MARKERS

PAVEMENT MARKER ARROW DETAIL (2)

NTS

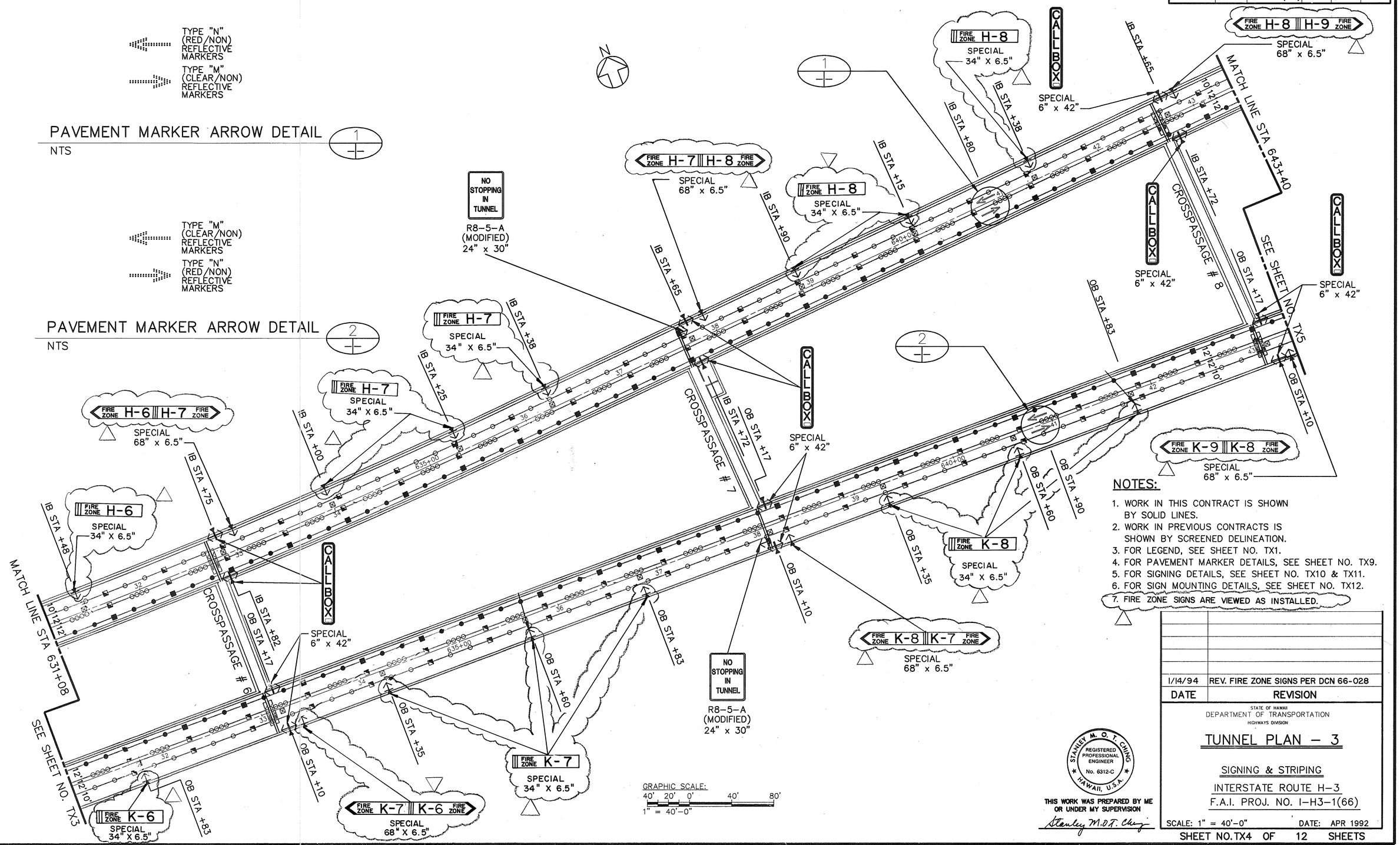


## NOTES:

1. WORK IN THIS CONTRACT IS SHOWN BY SOLID LINES.
2. WORK IN PREVIOUS CONTRACTS IS SHOWN BY SCREENED DELINEATION.
3. FOR LEGEND, SEE SHEET NO. TX1.
4. FOR PAVEMENT MARKER DETAILS, SEE SHEET NO. TX9.
5. FOR SIGNING DETAILS, SEE SHEET NO. TX10 & TX11.
6. FOR SIGN MOUNTING DETAILS, SEE SHEET NO. TX12.
7. FIRE ZONE SIGNS ARE VIEWED AS INSTALLED.

| DATE | REVISION |
|---|---|
| 1/14/94 | REV. FIRE ZONE SIGNS PER DCN 66-028 |

STATE OF HAWAII
DEPARTMENT OF TRANSPORTATION
HIGHWAYS DIVISION

# TUNNEL PLAN – 3

SIGNING & STRIPING

INTERSTATE ROUTE H-3

F.A.I. PROJ. NO. I-H3-1(66)

SCALE: 1" = 40'-0" DATE: APR 1992

STANLEY M. O. T. CHING
REGISTERED PROFESSIONAL ENGINEER
No. 6312-C
HAWAII, U.S.A.

THIS WORK WAS PREPARED BY ME OR UNDER MY SUPERVISION

Stanley M.O.T. Ching

| ORIGINAL PLAN | | DATE |
|---|---|---|
| NOTEBOOK | SURVEY PLOTTED BY: CADD | 12/12/91 |
| | DRAWN BY: | |
| | TRACED BY: N. TRAN | 12/06/91 |
| | DESIGNED BY: | |
| | QUANTITIES BY: D. MCCORMICK | 12/12/91 |
| No. | CHECKED BY: | |

SHEET NO. TX4 OF 12 SHEETS

H3-6TX4 -H3\C6 -03-25-92

| FED. ROAD DIST. NO. | STATE | FED. AID PROJ. NO. | FISCAL YEAR | SHEET NO. | TOTAL SHEETS |
|---|---|---|---|---|---|
| HAWAII | HAW | I-H3-1(66) | 1992 | 403 | 440 |

TYPE "N" (RED/NON) REFLECTIVE MARKERS

TYPE "M" (CLEAR/NON) REFLECTIVE MARKERS

PAVEMENT MARKER ARROW DETAIL 1

NTS

TYPE "M" (CLEAR/NON) REFLECTIVE MARKERS

TYPE "N" (RED/NON) REFLECTIVE MARKERS

PAVEMENT MARKER ARROW DETAIL 2

NTS

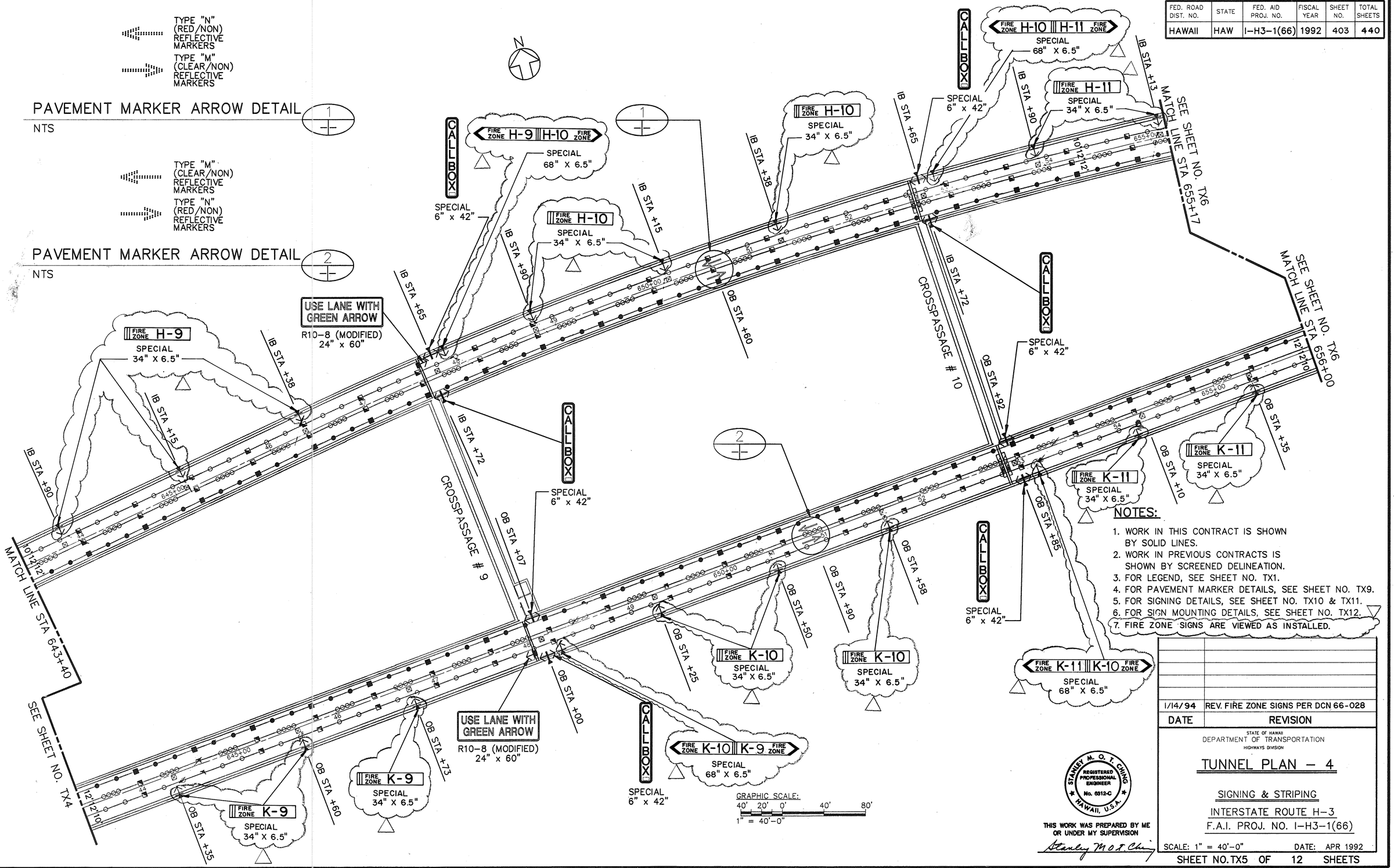


## NOTES:

1. WORK IN THIS CONTRACT IS SHOWN BY SOLID LINES.
2. WORK IN PREVIOUS CONTRACTS IS SHOWN BY SCREENED DELINEATION.
3. FOR LEGEND, SEE SHEET NO. TX1.
4. FOR PAVEMENT MARKER DETAILS, SEE SHEET NO. TX9.
5. FOR SIGNING DETAILS, SEE SHEET NO. TX10 & TX11.
6. FOR SIGN MOUNTING DETAILS, SEE SHEET NO. TX12.
7. FIRE ZONE SIGNS ARE VIEWED AS INSTALLED.

| DATE | REVISION |
|---|---|
| 1/14/94 | REV. FIRE ZONE SIGNS PER DCN 66-028 |

STATE OF HAWAII
DEPARTMENT OF TRANSPORTATION
HIGHWAYS DIVISION

# TUNNEL PLAN – 4

SIGNING & STRIPING

INTERSTATE ROUTE H-3

F.A.I. PROJ. NO. I-H3-1(66)

SCALE: 1" = 40'-0" DATE: APR 1992

STANLEY M. O. T. CHING
REGISTERED PROFESSIONAL ENGINEER
No. 6512-C
HAWAII, U.S.A.

THIS WORK WAS PREPARED BY ME OR UNDER MY SUPERVISION

Stanley M.O.T. Ching

| ORIGINAL PLAN | | DATE |
|---|---|---|
| | SURVEY PLOTTED BY: OASD | 12/11/91 |
| | TRACED BY: | |
| NOTEBOOK | DESIGNED BY: N. TRAN | 12/05/91 |
| | QUANTITIES BY: | |
| No. | CHECKED BY: D. MCCORMICK | 12/11/91 |

SHEET NO. TX5 OF 12 SHEETS

H3-6TX5 -H3\C6 -03-25-92

| FED. ROAD DIST. NO. | STATE | FED. AID PROJ. NO. | FISCAL YEAR | SHEET NO. | TOTAL SHEETS |
|---|---|---|---|---|---|
| HAWAII | HAW | I-H3-1(66) | 1992 | 404 | 440 |

TYPE "N" (RED/NON) REFLECTIVE MARKERS

PAVEMENT MARKER ARROW DETAIL 1

NTS

TYPE "N" (RED/NON) REFLECTIVE MARKERS

PAVEMENT MARKER ARROW DETAIL 2

NTS

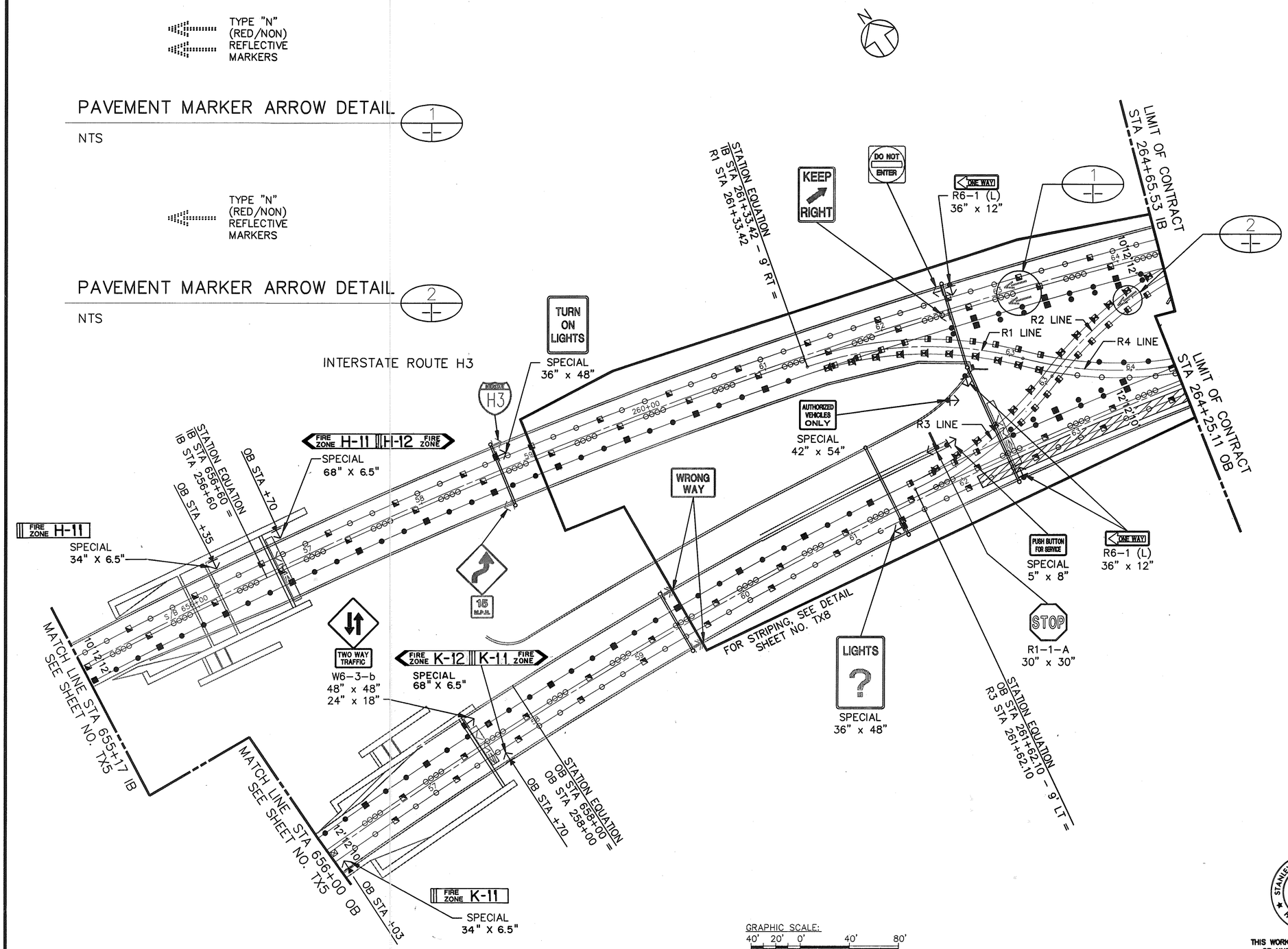


GRAPHIC SCALE:
40' 20' 0' 40' 80'
1" = 40'-0"

CURVE DATA

| CURVE | DATA |
|---|---|
| R1 | Δ = 33° 22' 28"<br>R = 306.00'<br>LC = 178.24'<br>TAN = 91.73' |
| R2 | Δ = 41° 23' 20"<br>R = 306.00'<br>LC = 221.04'<br>TAN = 115.59' |
| R3 | Δ = 27° 17' 4"<br>R = 306.00'<br>LC = 145.72'<br>TAN = 74.27' |
| R4 | Δ = 34° 55' 38"<br>R = 306.00'<br>LC = 186.54'<br>TAN = 96.27' |

## LEGEND:

PAVEMENT MARKERS NOT INSTALLED

## NOTES:

1. WORK IN THIS CONTRACT IS SHOWN BY SOLID LINES.
2. WORK IN PREVIOUS CONTRACTS IS SHOWN BY SCREENED DELINEATION.
3. FOR LEGEND, SEE SHEET NO. TX1.
4. FOR PAVEMENT MARKER DETAILS, SEE SHEET NO. TX9.
5. FOR SIGNING DETAILS, SEE SHEET NO. TX10 & TX11.
6. FOR SIGN MOUNTING DETAILS, SEE SHEET NO. TX12.
7. FIRE ZONE SIGNS ARE VIEWED AS INSTALLED.

| DATE | REVISION |
|---|---|
| 1/14/94 | REV. FIRE ZONE SIGNS PER DCN 66-028 |

STATE OF HAWAII
DEPARTMENT OF TRANSPORTATION
HIGHWAYS DIVISION

# HAIKU CROSSOVER PLAN

SIGNING & STRIPING

INTERSTATE ROUTE H-3

F.A.I. PROJ. NO. I-H3-1(66)

SCALE: 1" = 40'-0" DATE: APR 1992

SHEET NO. TX6 OF 12 SHEETS

STANLEY M. O. T. CHING
REGISTERED PROFESSIONAL ENGINEER
No. 6312-C
HAWAII, U.S.A.

THIS WORK WAS PREPARED BY ME OR UNDER MY SUPERVISION

Stanley M. O. T. Ching

| ORIGINAL PLAN | | DATE |
|---|---|---|
| | SURVEY PLOTTED BY | |
| | DRAWN BY CADD | 12/12/91 |
| | TRACED BY | |
| | DESIGNED BY N. TRAN | 12/09/91 |
| NOTEBOOK | QUANTITIES BY | |
| | CHECKED BY D. MCCORMICK | 12/12/91 |
| No. | | |

H3-6TX6 -H3\C6 -03-25-92

| FED. ROAD DIST. NO. | STATE | FED. AID PROJ. NO. | FISCAL YEAR | SHEET NO. | TOTAL SHEETS |
|---|---|---|---|---|---|
| HAWAII | HAW | I-H3-1(66) | 1992 | 405 | 440 |

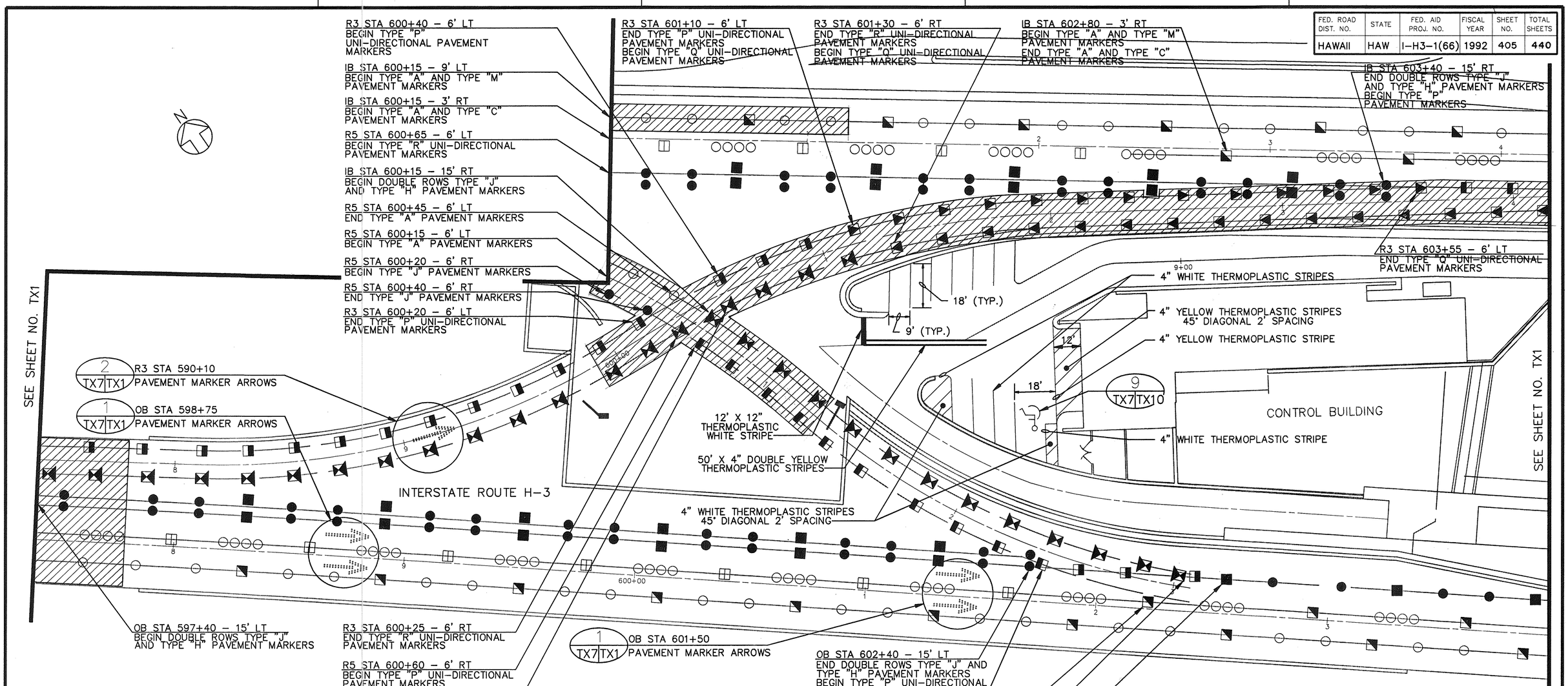


## NOTES:

1. WORK IN THIS CONTRACT IS SHOWN BY SOLID LINES.
2. WORK IN PREVIOUS CONTRACTS IS SHOWN BY SCREENED DELINEATION.
3. FOR LEGEND, SEE SHEET NO. TX1.
4. FOR PAVEMENT MARKER DETAILS, SEE SHEET NO. TX9.
5. FOR SIGNING DETAILS, SEE SHEET NO. TX10 & TX11.
6. FOR SIGN MOUNTING DETAILS, SEE SHEET NO. TX12.

## LEGEND:

PAVEMENT MARKERS NOT INSTALLED

GRAPHIC SCALE:
20' 10' 0' 20' 40'
1" = 20'-0"

| ORIGINAL PLAN | | DATE |
|---|---|---|
| | SURVEY PLOTTED BY: | |
| | DRAWN BY: CADD | 12/12/91 |
| | TRACED BY: | |
| | DESIGNED BY: N. TRAN | 12/10/91 |
| NOTEBOOK | REVIEWED BY: | |
| | QUANTITIES BY: | |
| No. | CHECKED BY: D. MCCORMICK | 12/12/91 |

THIS WORK WAS PREPARED BY ME OR UNDER MY SUPERVISION

STANLEY M. O. T. CHING
REGISTERED PROFESSIONAL ENGINEER
No. 6312-C
HAWAII, U.S.A.

Stanley M.O.T. Ching

| DATE | REVISION |
|---|---|
| | |

STATE OF HAWAII
DEPARTMENT OF TRANSPORTATION
HIGHWAYS DIVISION

# HALAWA CROSSOVER DETAIL

SIGNING & STRIPING

INTERSTATE ROUTE H-3
F.A.I. PROJ. NO. I-H3-1(66)

SCALE: 1" = 20'-0" DATE: APR 1992

SHEET NO. TX7 OF 12 SHEETS

h3-6tx7 -/h3/c6 -03-25-92

| FED. ROAD DIST. NO. | STATE | FED. AID PROJ. NO. | FISCAL YEAR | SHEET NO. | TOTAL SHEETS |
|---|---|---|---|---|---|
| HAWAII | HAW | I-H3-1(66) | 1992 | 406 | 440 |

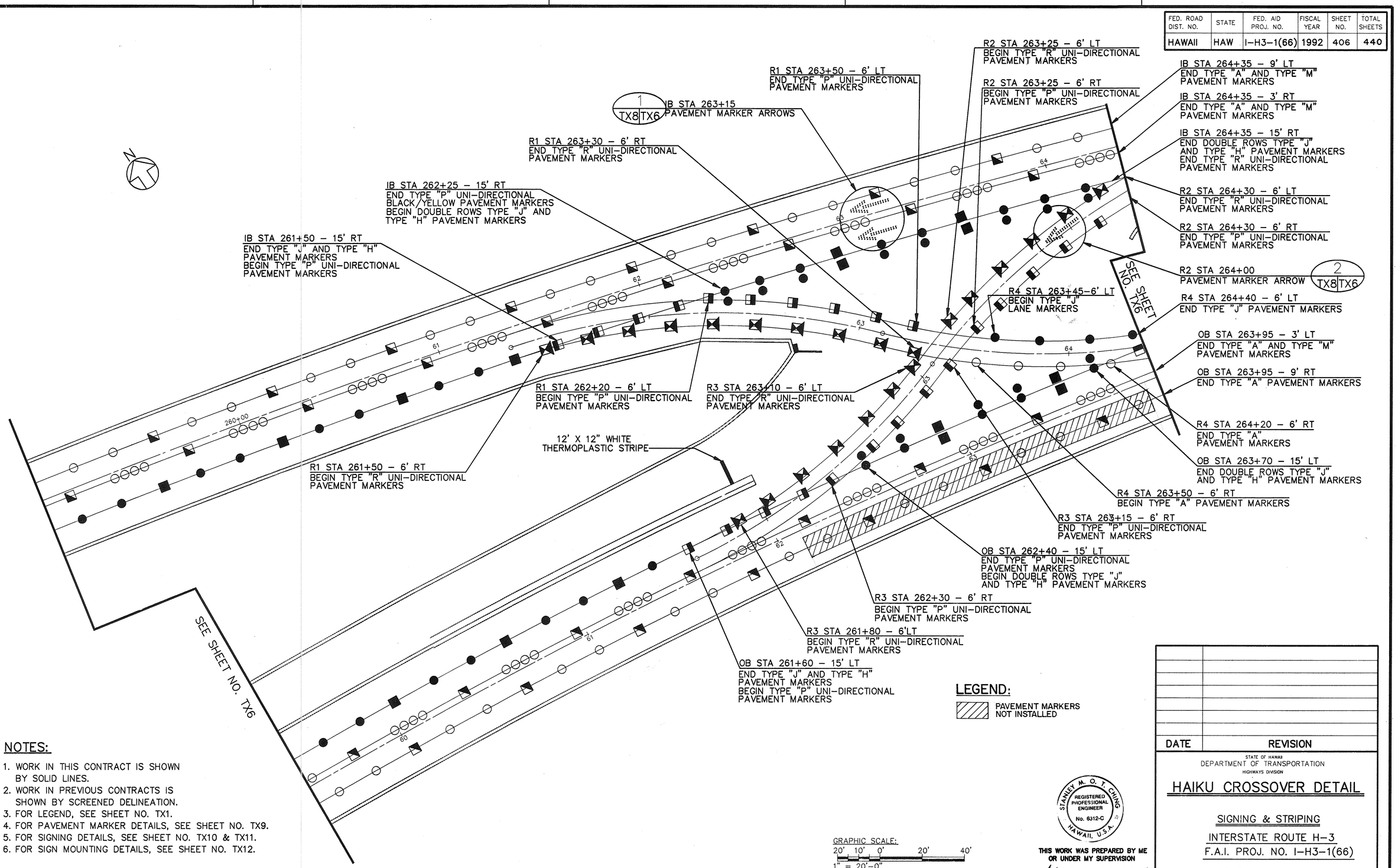


## NOTES:

1. WORK IN THIS CONTRACT IS SHOWN BY SOLID LINES.
2. WORK IN PREVIOUS CONTRACTS IS SHOWN BY SCREENED DELINEATION.
3. FOR LEGEND, SEE SHEET NO. TX1.
4. FOR PAVEMENT MARKER DETAILS, SEE SHEET NO. TX9.
5. FOR SIGNING DETAILS, SEE SHEET NO. TX10 & TX11.
6. FOR SIGN MOUNTING DETAILS, SEE SHEET NO. TX12.

| ORIGINAL PLAN | | DATE |
|---|---|---|
| | SURVEY PLOTTED BY | |
| | DRAWN BY CADD | 12/12/91 |
| | TRACED BY | |
| NOTEBOOK | DESIGNED BY N. TRAN | 12/10/91 |
| | QUANTITIES BY | |
| No. | CHECKED BY D. MCCORMICK | 12/12/91 |

STANLEY M. O. T. CHING
REGISTERED PROFESSIONAL ENGINEER
No. 6312-C
HAWAII, U.S.A.

THIS WORK WAS PREPARED BY ME OR UNDER MY SUPERVISION

Stanley M. O.T. Ching

| DATE | REVISION |
|---|---|
| | |

STATE OF HAWAII
DEPARTMENT OF TRANSPORTATION
HIGHWAYS DIVISION

# HAIKU CROSSOVER DETAIL

SIGNING & STRIPING

INTERSTATE ROUTE H-3

F.A.I. PROJ. NO. I-H3-1(66)

SCALE: 1" = 20'-0" DATE: APR 1992

SHEET NO. TX8 OF 12 SHEETS

h3-6tx8 -/h3/c6 -03-25-92

| FED. ROAD DIST. NO. | STATE | FED. AID PROJ. NO. | FISCAL YEAR | SHEET NO. | TOTAL SHEETS |
|---|---|---|---|---|---|
| HAWAII | HAW. | I-H3-1(66) | 1992 | 407 | 440 |

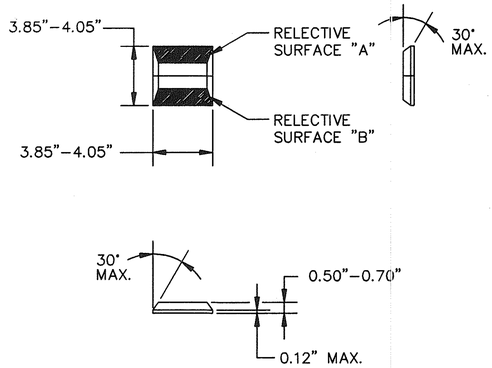


| TYPE | REFLECTIVE SURFACE "A" | REFLECTIVE SURFACE "B" |
|---|---|---|
| "M" | CLEAR | NON |
| "N" | RED | NON |
| "O" | BLUE | BLUE |

REFLECTIVE PAVEMENT MARKER DETAIL

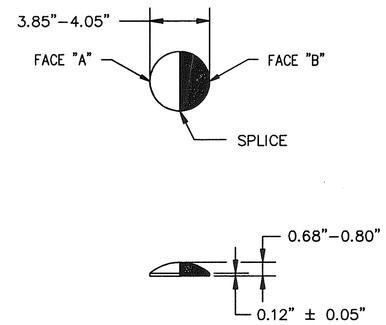


| TYPE | FACE "A" | FACE "B" |
|---|---|---|
| "P" | BLACK | YELLOW |
| "Q" | WHITE | YELLOW |
| "R" | BLACK | WHITE |

UNI-DIRECTIONAL PAVEMENT MARKER DETAIL

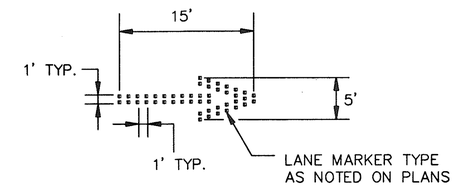


PAVEMENT MARKER ARROW DETAIL

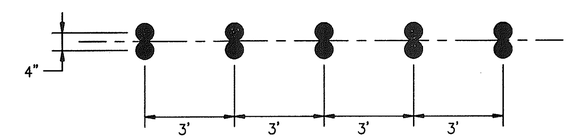


DOUBLE ROWS TYPE "J" PAVEMENT MARKER DETAIL

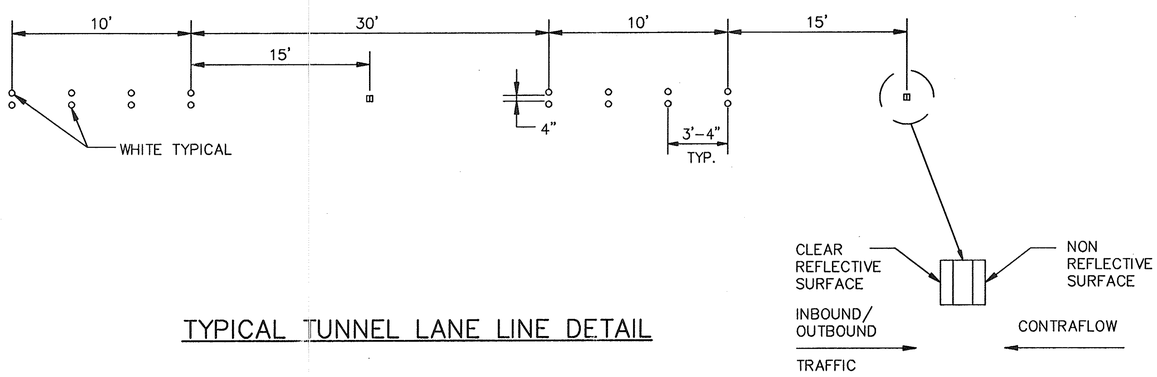


TYPICAL TUNNEL LANE LINE DETAIL

| | |
|---|---|
| SURVEY PLOTTED BY | DATE 12/13/91 |
| DRAWN BY GADD | |
| TRACED BY | 12/13/91 |
| DESIGNED BY N. TRAN | |
| QUANTITIES BY | 12/13/91 |
| CHECKED BY D. MCCORMICK | |
| ORIGINAL PLAN | |
| NOTEBOOK | |
| No. | |

STANLEY M. O. T. CHING
REGISTERED PROFESSIONAL ENGINEER
No. 6312-C
HAWAII, U.S.A.

THIS WORK WAS PREPARED BY ME OR UNDER MY SUPERVISION

Stanley M. O. T. Ching

| DATE | REVISION |
|---|---|
| | |

STATE OF HAWAII
DEPARTMENT OF TRANSPORTATION
HIGHWAYS DIVISION

STRIPING DETAILS

SIGNING & STRIPING

INTERSTATE ROUTE H-3

F.A.I. PROJ. NO. I-H3-1(66 )

SCALE: NONE DATE: APR 1992

SHEET NO. TX9 OF 12 SHEETS

h3-6tx9 -h3\c6 -03-26-92

| FED. ROAD DIST. NO. | STATE | FED. AID PROJ. NO. | FISCAL YEAR | SHEET NO. | TOTAL SHEETS |
|---|---|---|---|---|---|
| HAWAII | HAW. | I-H3-1(66) | 1992 | 408 | 440 |

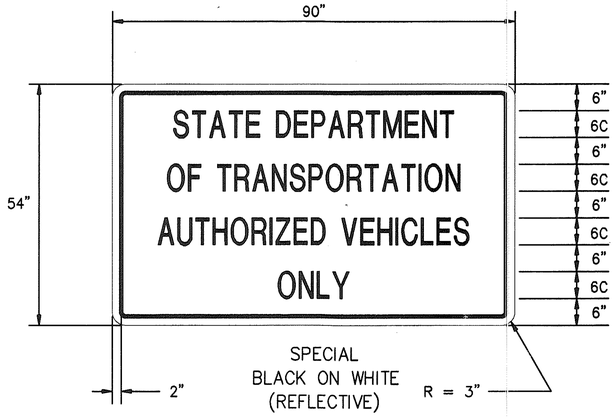


SPECIAL
BLACK ON WHITE
(REFLECTIVE)

DETAIL 1

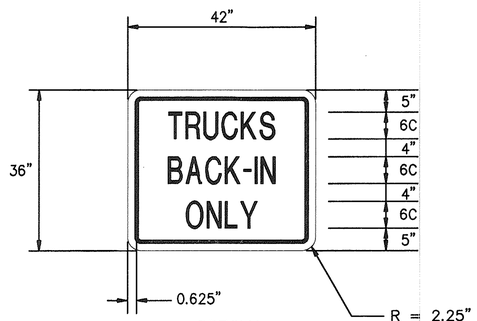


SPECIAL
BLACK ON WHITE
(REFLECTIVE)

DETAIL 2

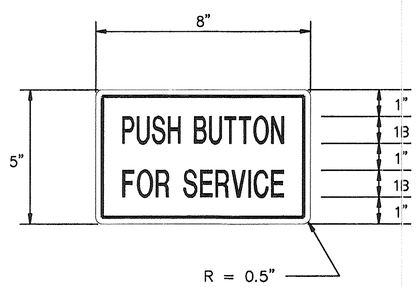


SPECIAL
BLACK ON WHITE
(REFLECTIVE)

DETAIL 3

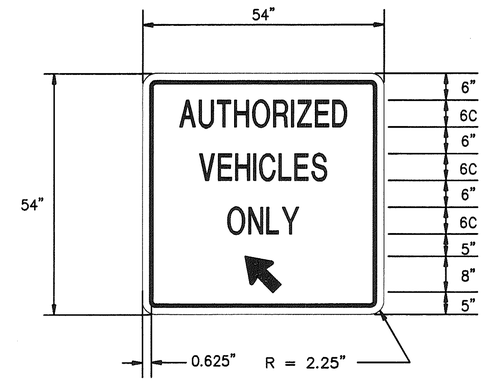


SPECIAL
BLACK ON WHITE
(REFLECTIVE)

DETAIL 4

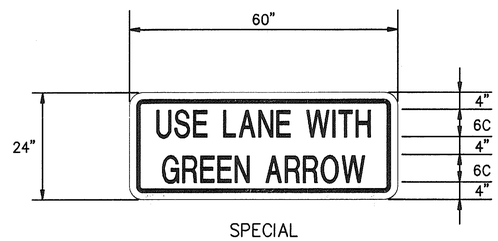


SPECIAL
BLACK ON WHITE
(REFLECTIVE)

DETAIL 5

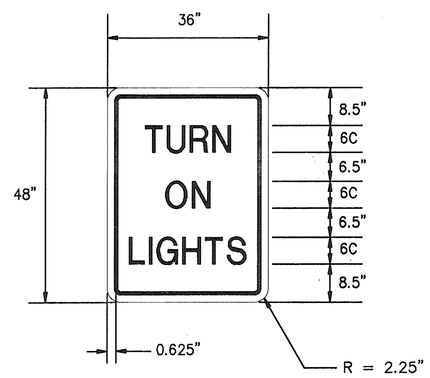


SPECIAL
BLACK ON WHITE
(REFLECTIVE)

DETAIL 6

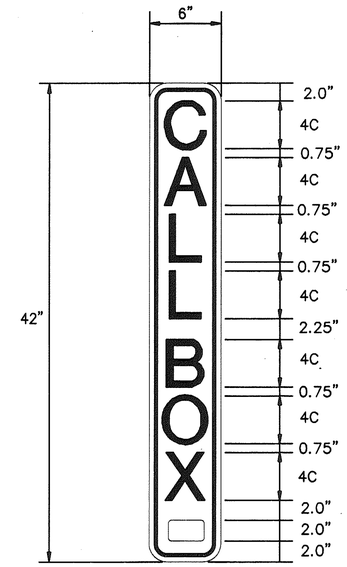


SPECIAL
BLACK ON WHITE
(REFLECTIVE)

DETAIL 7

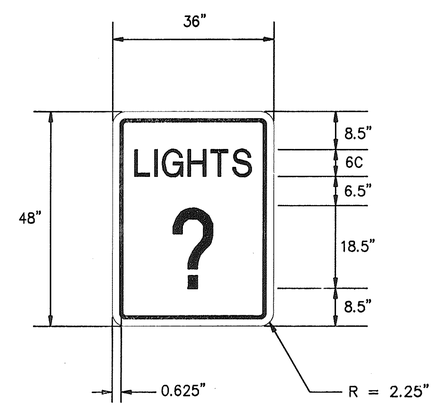


SPECIAL
BLACK ON WHITE
(REFLECTIVE)

DETAIL 8

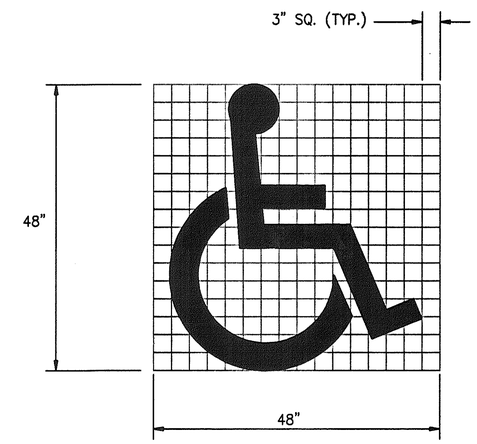


4" WHITE THERMOPLASTIC
PAVEMENT MARKING

DETAIL 9

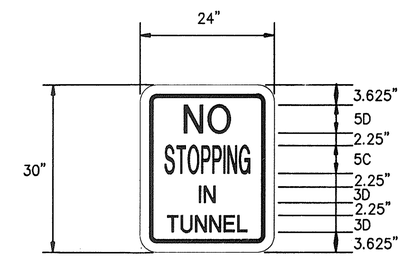


R8-5-A
(MODIFIED)

DETAIL 10

| DATE | REVISION |
|---|---|
| | |

STATE OF HAWAII
DEPARTMENT OF TRANSPORTATION
HIGHWAYS DIVISION

## SIGNING DETAILS - 1

SIGNING & STRIPING

INTERSTATE ROUTE H-3

F.A.I. PROJ. NO. I-H3-1(66 )

SCALE: NONE DATE: APR 1992

SHEET NO. TX10 OF 12 SHEETS

STANLEY M. O. T. CHING
REGISTERED PROFESSIONAL ENGINEER
No. 6312-C
HAWAII, U.S.A.

THIS WORK WAS PREPARED BY ME
OR UNDER MY SUPERVISION

Stanley M. O. T. Ching

| ORIGINAL PLAN | | DATE |
|---|---|---|
| | SURVEY PLOTTED BY | |
| | DRAWN BY CADD | 12/13/91 |
| NOTEBOOK | TRACED BY | |
| | DESIGNED BY N. TRAN | 12/13/91 |
| No. | QUANTITIES BY | |
| | CHECKED BY D.MCCORMICK | 12/13/91 |

h3-6tx10 -h3\c6 -03-23-92

| FED. ROAD DIST. NO. | STATE | FED. AID PROJ. NO. | FISCAL YEAR | SHEET NO. | TOTAL SHEETS |
|---|---|---|---|---|---|
| HAWAII | HAW. | I-H3-1(66) | 1992 | 409 | 440 |

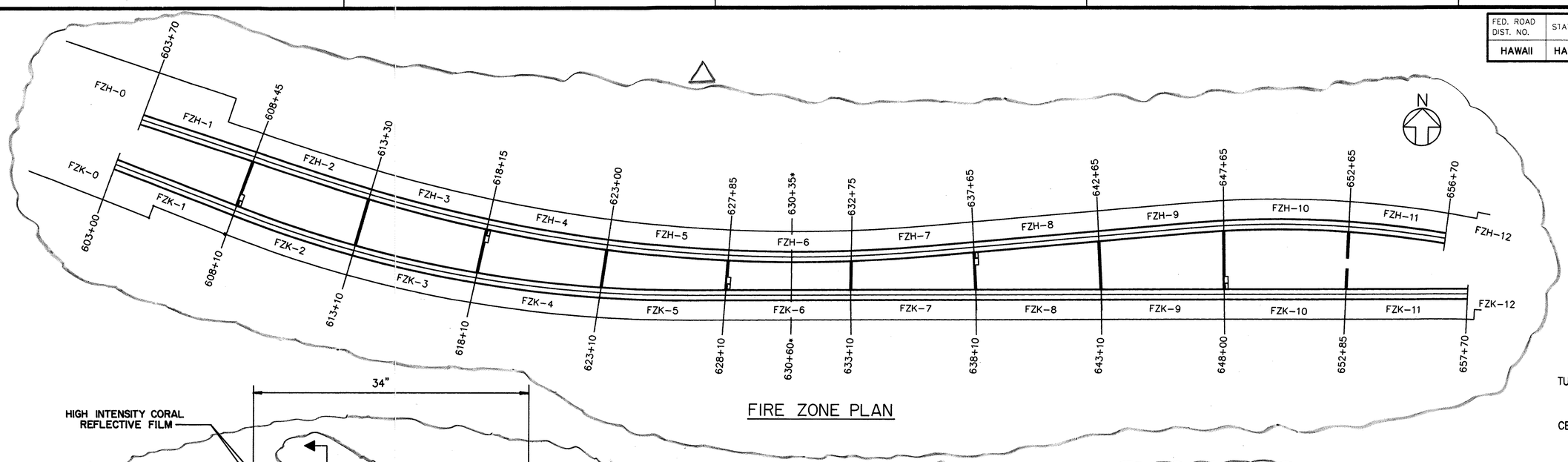


FIRE ZONE PLAN

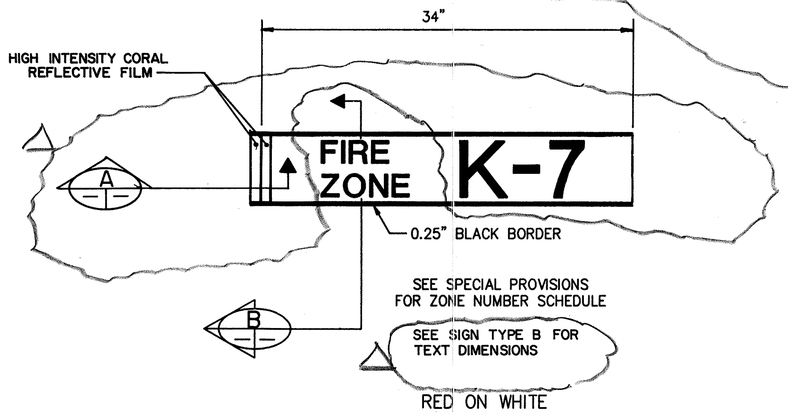


FIRE ZONE SIGN – TYPE A (1) TX1 TO TX6 | TX12

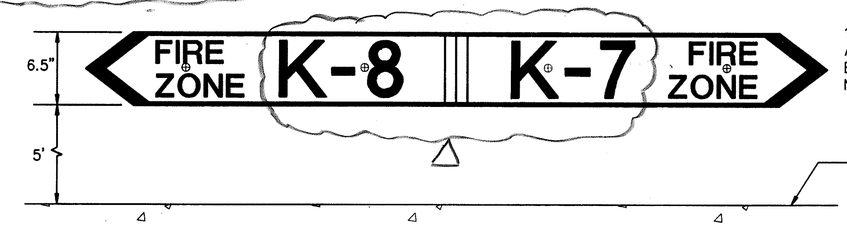


FIRE ZONE SIGN MOUNTING SECTION (B)

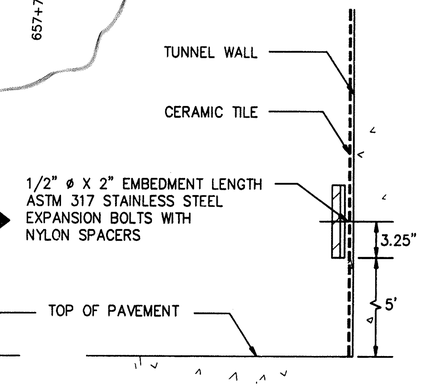


SIDE VIEW

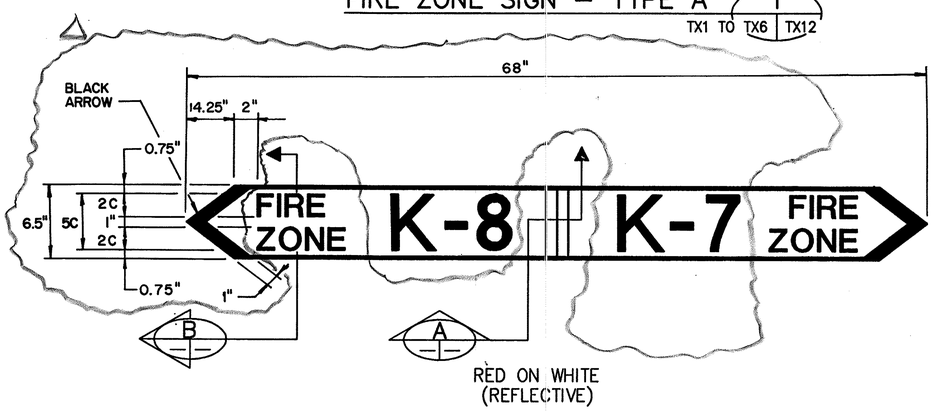


FIRE ZONE SIGN – TYPE B (2) TX1 TO TX6 | TX12

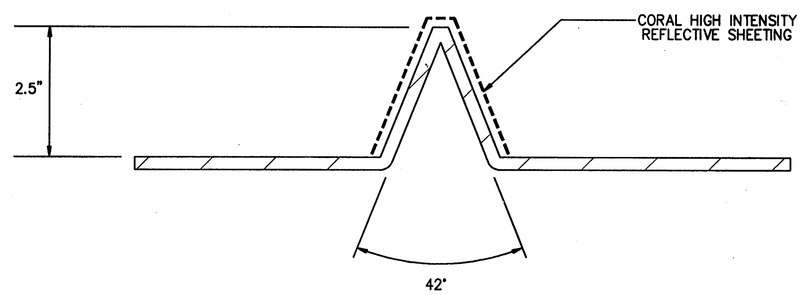


SIGN SECTION (A)

| DATE | REVISION |
|---|---|
| 1/4/94 | ADDED FIRE ZONE PLAN AND REVISED SIGNS PER DCN 66-028 |

STATE OF HAWAII
DEPARTMENT OF TRANSPORTATION
HIGHWAYS DIVISION

## SIGNING DETAILS – 2

SIGNING & STRIPING
INTERSTATE ROUTE H-3
F.A.I. PROJ. NO. I-H3-1(66)

SCALE: NONE DATE: APR 1992

SHEET NO. TX11 OF 12 SHEETS

STANLEY M. O. T. CHING
REGISTERED PROFESSIONAL ENGINEER
No. 6312-C
HAWAII, U.S.A.

THIS WORK WAS PREPARED BY ME OR UNDER MY SUPERVISION

Stanley M.O.T. Ching

| ORIGINAL PLAN | | DATE |
|---|---|---|
| | SURVEY PLOTTED BY GADD | 12/13/91 |
| | DRAWN BY | |
| | TRACED BY N. TRAN | 12/13/91 |
| NOTEBOOK | DESIGNED BY | |
| | QUANTITIES BY | 12/13/91 |
| No. | CHECKED BY D.MCCORMICK | |

h3-6tx11 -h3\c6 -03-23-92

| FED. ROAD DIST. NO. | STATE | FED. AID PROJ. NO. | FISCAL YEAR | SHEET NO. | TOTAL SHEETS |
|---|---|---|---|---|---|
| HAWAII | HAW. | I-H3-1(66) | 1992 | 410 | 440 |

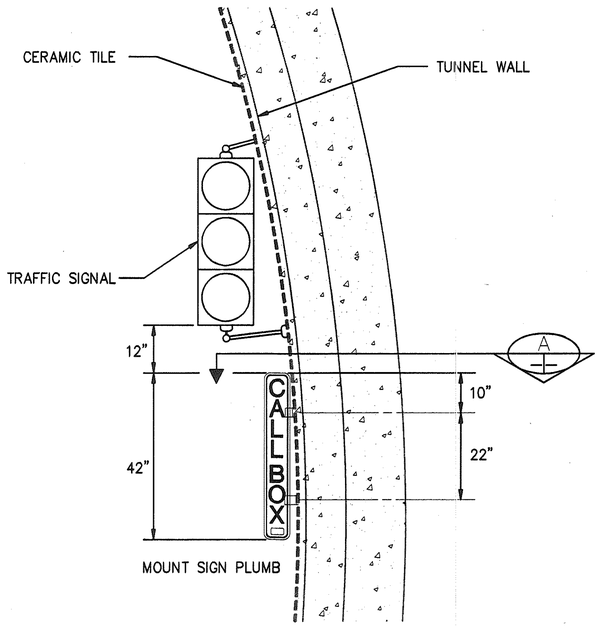


TUNNEL WALL MOUNTED SIGN DETAIL

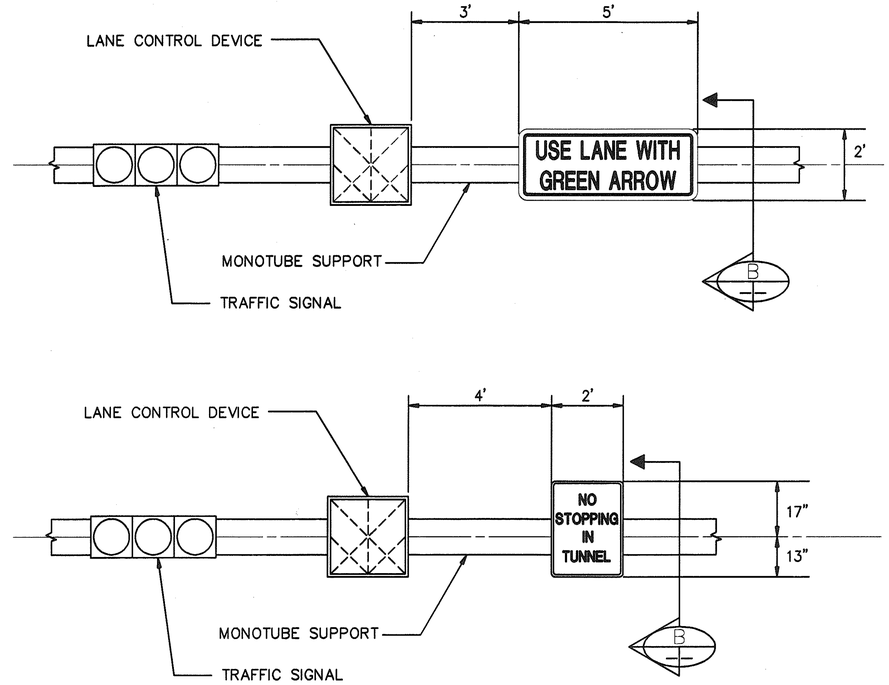


OVERHEAD SIGN MOUNTING DETAILS

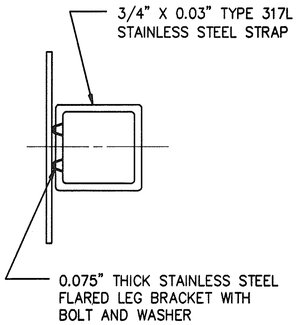


OVERHEAD SIGN MOUNTING SECTION B

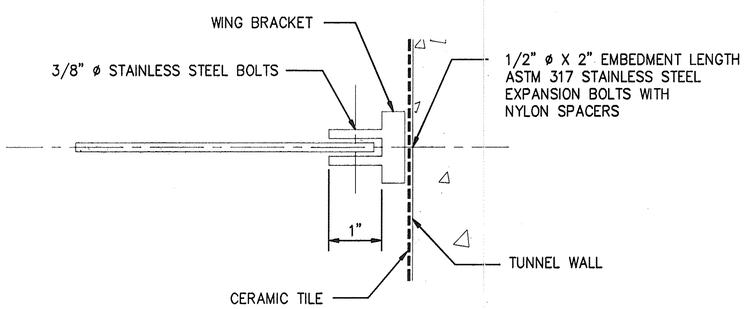


TUNNEL WALL MOUNTING SECTION A

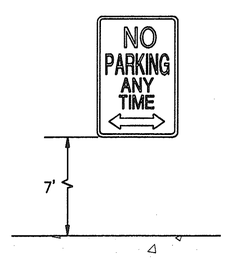


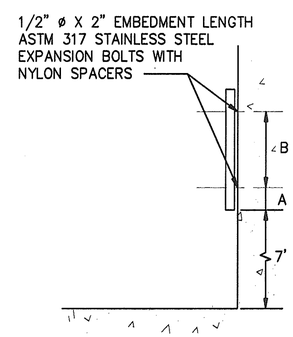


SIDE VIEW

WALL MOUNTED SIGN DETAIL

| WALL MOUNTED SIGNS | DIM "A" | DIM "B" |
|---|---|---|
| R7-1-A | 6" | 18" |
| R7-6 | 4" | 10" |

## NOTES:

1. WORK IN THIS CONTRACT IS SHOWN BY SOLID LINES.
2. WORK IN PREVIOUS CONTRACTS IS SHOWN BY SCREENED DELINEATION.
3. FOR SIGNING DETAILS, SEE SHEET NO. TX10 & TX11.

| DATE | REVISION |
|---|---|
| | |

STANLEY M. O. T. CHING
REGISTERED PROFESSIONAL ENGINEER
No. 6312-C
HAWAII, U.S.A.

THIS WORK WAS PREPARED BY ME OR UNDER MY SUPERVISION

Stanley M.O.T. Ching

STATE OF HAWAII
DEPARTMENT OF TRANSPORTATION
HIGHWAYS DIVISION

# MOUNTING DETAILS

SIGNING & STRIPING

INTERSTATE ROUTE H-3

F.A.I. PROJ. NO. I-H3-1(66)

SCALE: NONE DATE: APR 1992

SHEET NO. TX12 OF 12 SHEETS

| | | DATE |
|---|---|---|
| ORIGINAL PLAN | SURVEY PLOTTED BY | |
| | DRAWN BY | CADD 12/13/91 |
| | TRACED BY | 12/13/91 |
| NOTEBOOK | DESIGNED BY | N. TRAN 12/13/91 |
| | QUANTITIES BY | |
| No. | CHECKED BY | D.MCCORMICK 12/13/91 |

h3-6tx12 -h3\c6 -03-23-92