FED. ROAD DIST. NO.	STATE	FED. AID PROJ. NO.	FISCAL YEAR	SHEET NO.	TOTAL SHEETS
HAWAII	HAW.	I-H3-1(66)	1992	363	440

GENERAL NOTES FOR SIGN STRUCTURES AND FARADAY SHIELD SUPPORTS

1. DESIGN SPECIFICATIONS:

AASHTO STANDARD SPECIFICATIONS FOR STRUCTURAL SUPPORTS FOR HIGHWAY SIGNS, LUMINAIRES AND TRAFFIC SIGNALS, CURRENT EDITION

2. DESIGN DATA:

WIND LOADING: DESIGN WIND SPEED = 80 MPH. FOR WIND LOAD NORMAL TO FACE OF SIGN AND TRANSVERSE TO FACE OF SIGN, SEE DESIGN SPECIFICATIONS.

WALKWAYS: SEE NOTES ON SHEET NO. SS28.

ICE LOAD: NONE

STRUCTURAL STEEL: ASTM A36

HIGH STRENGTH BOLTS: ASTM A325 (FRICTION – TYPE CONNECTION)

STRUCTURAL TUBING: ASTM A500 GRADE B

STEEL PIPE: ASTM A53 TYPE E GRADE B

3. WELDING:

ALL WELDING TO BE CONTINUOUS WELDS AND AS NOTED ON THE PLANS. ALL WELDING SHALL CONFORM TO THE REQUIREMENTS OF ANSI/AASHTO/AWS D1.5–88 "BRIDGE WELDING CODE".

4. MATERIALS:

A. SIGN SUPPORT BOX TRUSS MEMBERS AND SUPPORTING POSTS; SHEET METAL SIDING AND EDGINGS; CONNECTION BOLTS; NUT AND WASHERS; TO BE STRUCTURAL STEEL. TUBULAR SECTION SUPPORTING FARADAY SHIELD SHALL BE STRUCTURAL TUBING. ALL SURFACES SHALL BE HOT–DIPPED GALVANIZED AFTER FABRICATION PRIOR TO PAINTING. SEE SPECIFICATIONS AND "RIBBED SHEET METAL NOTES" ON SHEET NO. SS29.

B. GALVANIZED SURFACES OF SUPPORT STRUCTURES FOR OVERHEAD SIGNS, LANE CONTROL DISPLAY SIGNALS AND FARADAY SHIELDS (NOTE A. ABOVE) SHALL BE PAINTED TO WARM GRAY COLOR. SEE SPECIFICATIONS.

C. CONTACT SURFACES IN HIGH STRENGTH (H.S.) BOLT CONNECTIONS SHALL NOT BE PAINTED. THE GALVANIZING ON THESE SURFACES SHALL BE LIGHTLY SCORED BY WIRE BRUSHING PRIOR TO ASSEMBLY.

D. HIGH STRENGTH BOLTS SHALL BE GALVANIZED, FURNISHED AND INSTALLED IN CONFORMANCE WITH CURRENT ASTM A325 WITH LUBRICATED NUTS.

E. LEVELING GROUT SHALL BE NON–SHRINK AND NON–METALLIC.

5. CONSTRUCTION METHOD:

SEE HAWAII STANDARD SPECIFICATIONS FOR ROAD AND BRIDGE CONSTRUCTION, 1985 EDITION, AASHTO STANDARD SPECIFICATIONS FOR STRUCTURAL SUPPORTS FOR HIGHWAY SIGNS, LUMINAIRES AND TRAFFIC SIGNALS, CURRENT EDITION AND SPECIAL PROVISIONS.

6. GENERAL:

A. PRIOR TO FABRICATION OF FRAMES OF SUPPORT STRUCTURES FOR OVERHEAD SIGNS, LANE CONTROL DISPLAY SIGNALS AND FARADAY SHIELDS, THE CONTRACTOR SHALL VERIFY IN THE FIELD THE EXACT LOCATION OF EACH OF THE ANCHOR BOLTS, THE POST ELEVATION AT THE TOP OF THE SUPPORTING CONCRETE AND SPAN LENGTH OF FRAME.

B. PAYMENT FOR SUPPORT STRUCTURES FOR THE OVERHEAD SIGNS, LANE CONTROL DISPLAY SIGNALS AND FARADAY SHIELDS SHALL BE MADE AS DESCRIBED IN THE SPECIAL PROVISIONS.

C. FARADAY SHIELD WIRES IN LONGITUDINAL DIRECTION SHALL BE INSTALLED SYMMETRICALLY ON EACH FARADAY SHIELD SUPPORT WITH A MAXIMUM OF 5 UNBALANCED OF 500' SPAN LENGTH. THE CONTRACTOR SHALL PROVIDE TEMPORARY BRACINGS FOR FARADAY SHIELD SUPPORT WHEN THE UNBALANCED WIRES EXCEED THE MAXIMUM DURING INSTALLATION.

7. SYMBOLS AND ABBREVIATIONS:

ABUT.	– ABUTMENT	GRS	– GALVANIZED RIGID STEEL
&	– AND	HEX.	– HEXAGONAL
@	– AT	H.S.	– HIGH STRENGTH
℄	– BASELINE	JB	– JUNCTION BOX
BRG.	– BEARING	JT.	– JOINT
CL.,CLR.	– CLEAR	LTG.	– LIGHTING
CONN.	– CONNECTION	N.H.	– NORTH HALAWA
CONT.	– CONTINUOUS	PT	– POINT OF TANGENT
DIAG.	– DIAGONAL	RECT.	– RECTANGULAR
DO.	– DITTO	STIFF.	– STIFFENER
EQ. SPS.	– EQUAL SPACES	t., thk.	– THICK
EXIST.	– EXISTING	ULT.	– ULTIMATE
FLEX.	– FLEXIBLE	VM	– VARIABLE MESSAGE
FM	– FIXED MESSAGE	WP	– WEATHERPROOF
		W/	– WITH

FOR DETAIL AS-BUILT INFORMATION REFER TO CONSTRUCTION SUBMITTALS

DATE	REVISION

HUI PANG CHEN
REGISTERED PROFESSIONAL ENGINEER
No. 3865-S
HAWAII, U.S.A.

THIS WORK WAS PREPARED BY ME OR UNDER MY SUPERVISION.

Hui Pang Chen

STATE OF HAWAII
DEPARTMENT OF TRANSPORTATION
HIGHWAYS DIVISION

GENERAL NOTES

SUPPORT STRUCTURES
INTERSTATE ROUTE H-3
F.A.I. PROJ. NO. I-H3-1(66)

SCALE: NO SCALE DATE: APR. 1992

SHEET No. SS1 OF 36 SHEETS

ORIGINAL PLAN	SURVEY PLOTTED BY	—	DATE
	DRAWN BY	TYLER WOOD	1/10
	TRACED BY	—	1/10
NOTE BOOK	DESIGNED BY	JF/HPC	3/92
	QUANTITIES BY	SAWN	3/92
No.	CHECKED BY	[illegible]	1/10

FED. ROAD DIST. NO.	STATE	FED. AID PROJ. NO.	FISCAL YEAR	SHEET NO.	TOTAL SHEETS
HAWAII	HAW.	I-H3-1(66)	1992	364	440

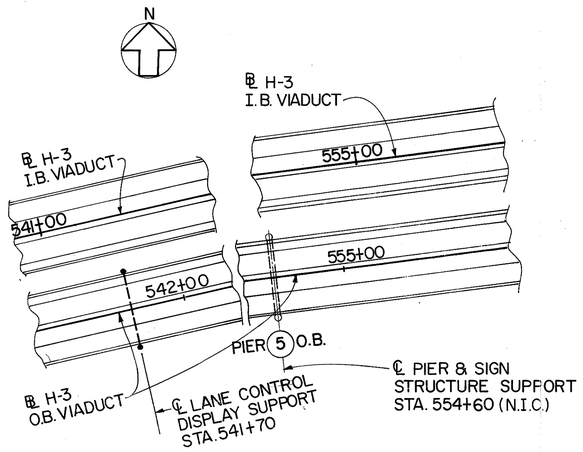

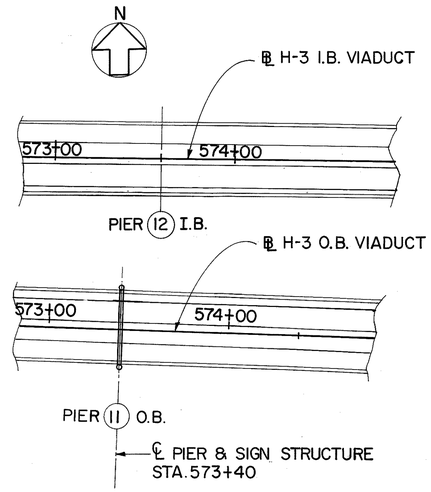

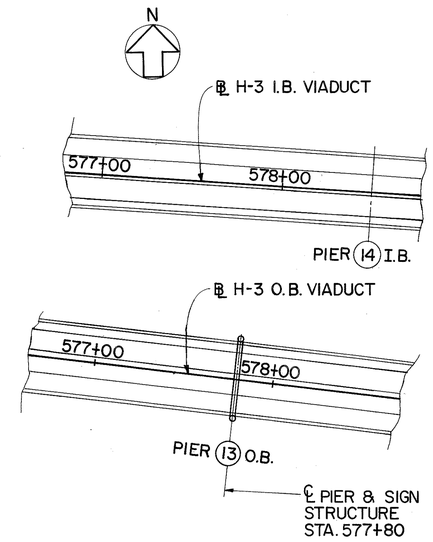

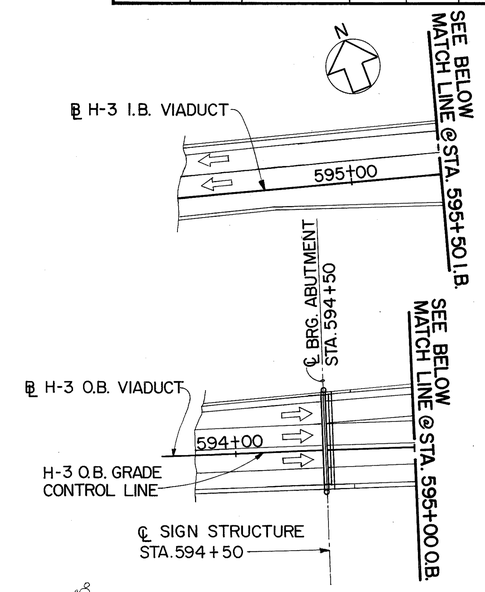

NOTES:

1. HALAWA APPROACH SIGN SUPPORT STRUCTURE SECTIONS SHOWN LOOKING UPSTATION ON SHEET NOS. SS6 THRU SS8.
2. HALAWA APPROACH SIGN SUPPORT STRUCTURES ARE RADIAL TO BASELINE EXCEPT AS SHOWN OTHERWISE ON LAYOUT PLAN.

PARTIAL PLAN

SCALE: 1" = 40'-0"

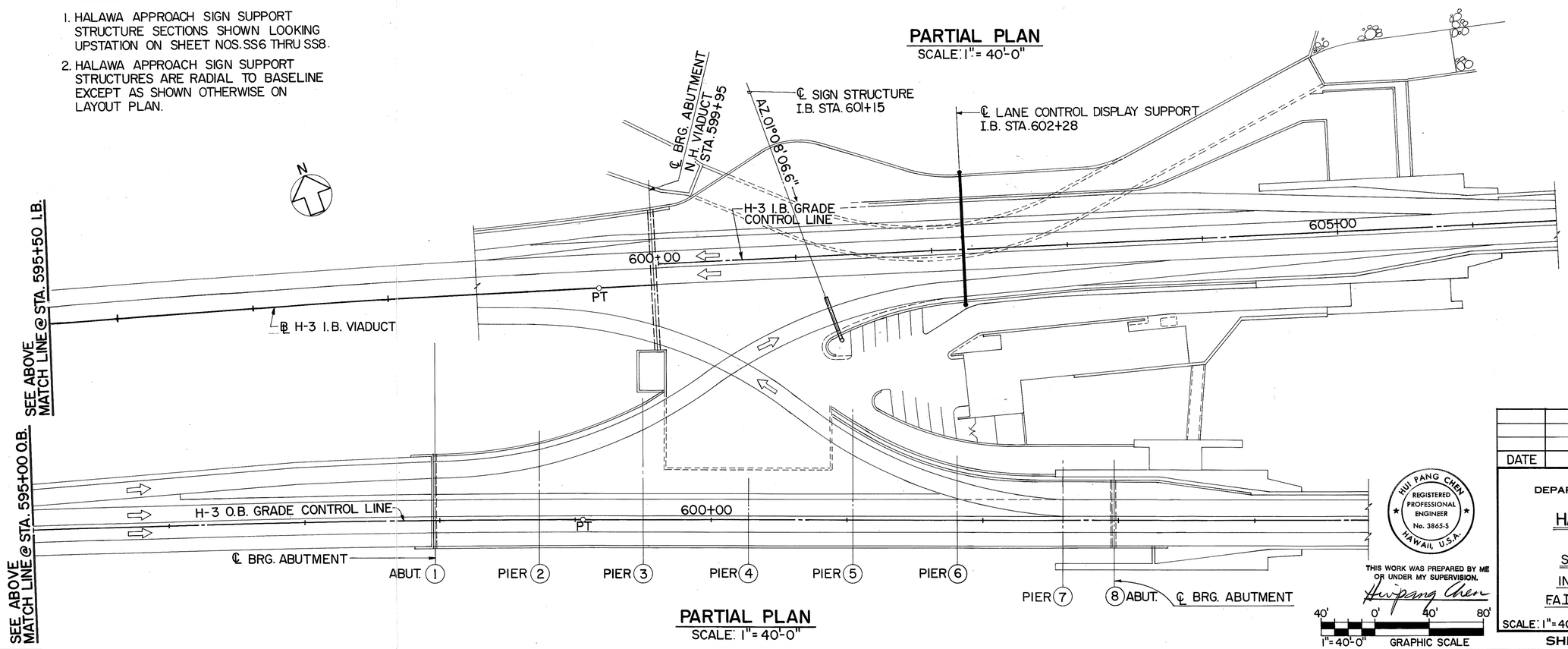

PARTIAL PLAN

SCALE: 1" = 40'-0"

HUI PANG CHEN REGISTERED PROFESSIONAL ENGINEER No. 3865-S HAWAII, U.S.A.

THIS WORK WAS PREPARED BY ME OR UNDER MY SUPERVISION.

Hui Pang Chen

40' 0' 40' 80'

1" = 40'-0" GRAPHIC SCALE

ORIGINAL PLAN	SURVEY PLOTTED BY	DATE 1/90
	DRAWN BY R. MALALUAN	" 1/90
NOTE BOOK	TRACED BY	" 3/90
	DESIGNED BY H.P. CHEN	" 1/90
	QUANTITIES BY S. LIN	
No.	CHECKED BY S. CHUN	

DATE	REVISION

STATE OF HAWAII
DEPARTMENT OF TRANSPORTATION
HIGHWAYS DIVISION

HALAWA APPROACH - LAYOUT PLAN

SUPPORT STRUCTURES

INTERSTATE ROUTE H-3

F.A.I. PROJ. NO. I-H3-1(66)

SCALE: 1" = 40'-0" DATE: APR. 1992

SHEET NO. SS2 OF 36 SHEETS

FED. ROAD DIST. NO.	STATE	FED. AID PROJ. NO.	FISCAL YEAR	SHEET NO.	TOTAL SHEETS
HAWAII	HAW.	I-H3-1(66)	1992	365	440

NOTES:

1. HAIKU APPROACH FARADAY SHIELD/SIGN SUPPORT STRUCTURE SECTIONS SHOWN LOOKING UPSTATION SHEET NOS. SS9 THRU SS14 EXCEPT SECTION E SS3 SS12 & SECTION F SS3 SS12
2. HAIKU APPROACH FARADAY SHIELD SUPPORT STRUCTURES ARE RADIAL TO BASELINE EXCEPT AS SHOWN OTHERWISE ON LAYOUT PLAN.
3. FARADAY SHIELD STRUCTURE INSTALLED.

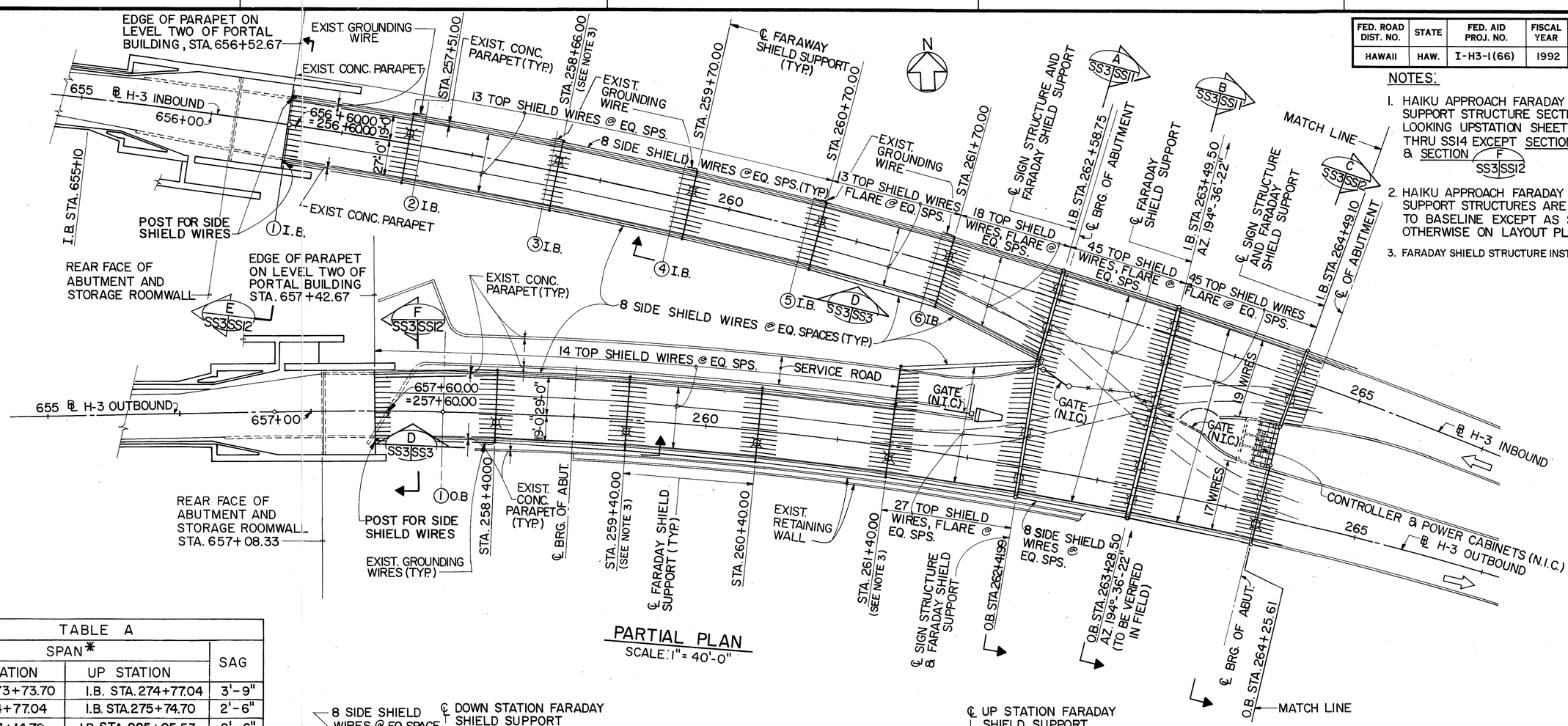

PARTIAL PLAN
SCALE: 1" = 40'-0"

TABLE A		
SPAN*		SAG
DOWN STATION	UP STATION	
I.B. STA. 273+73.70	I.B. STA. 274+77.04	3'-9"
I.B. STA. 274+77.04	I.B. STA. 275+74.70	2'-6"
I.B. STA. 284+14.70	I.B. STA. 285+05.53	2'-6"
I.B. STA. 285+05.53	I.B. STA. 285+97.07	3'-9"
I.B. STA. 285+97.07	I.B. STA. 286+94.70	2'-9"
I.B. STA. 295+53.70	I.B. STA. 296+53.70	2'-6"
I.B. STA. 296+53.70	I.B. STA. 297+57.20	3'-9"
O.B. STA. 273+70.11	O.B. STA 274+61.54	3'-9"
O.B. STA. 274+61.54	O.B. STA. 275+59.28	2'-9"
O.B. STA. 276+48.28	O.B. STA. 277+41.50	2'-6"
O.B. STA. 284+78.28	O.B. STA. 285+74.49	2'-9"
O.B. STA. 285+74.49	O.B. STA. 286+63.49	3'-9"
O.B. STA. 286+63.49	O.B. STA. 287+59.28	2'-9"
O.B. STA. 297+66.79	O.B. STA. 298+62.28	3'-9"
O.B. STA. 298+62.28	O.B. STA. 299+57.28	2'-6"

* REQUIRES SPACER, SEE SHEET NO. SS32 FOR DETAIL

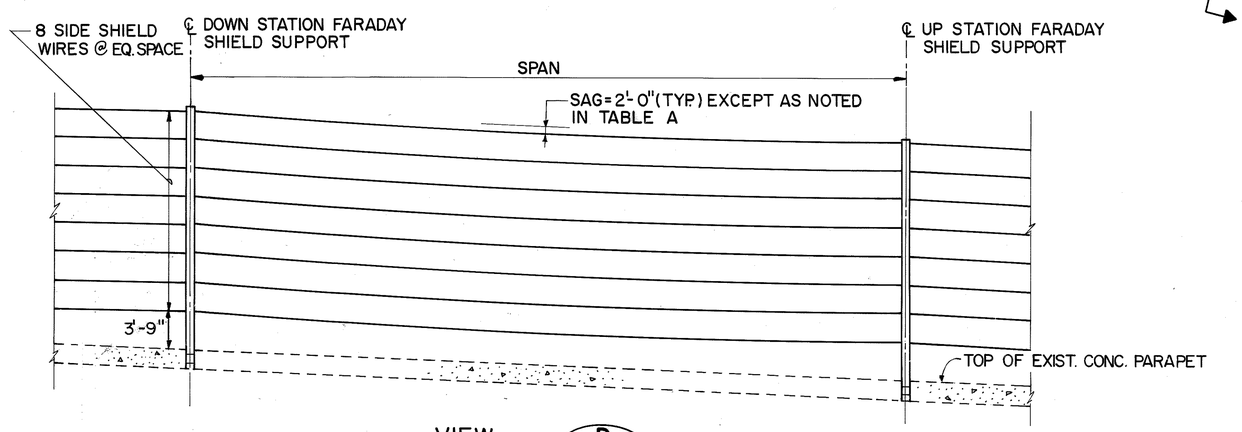

VIEW D SS3 SS3

TYPICAL PARTIAL ELEVATION FOR FARADAY SHIELD
N.T.S.

LEGEND

DENOTES LOCATION OF FUTURE LUMINAIRE.

DATE	REVISION
12/29/93	REV. DISTANCE FROM SIDE SHIELD WIRE TO TOP OF PARAPET (VIEW 'D') PER DCN 66-027
10/26/93	REVISED TABLE 'A' PER DCN 66-023

STATE OF HAWAII
DEPARTMENT OF TRANSPORTATION
HIGHWAYS DIVISION

HAIKU APPROACH - LAYOUT PLAN 1
SUPPORT STRUCTURES
INTERSTATE ROUTE H-3
F.A.I. PROJ. NO. I-H3-1(66)

SCALE: AS SHOWN DATE: APR. 1992

SHEET NO. SS3 OF 36 SHEETS

40' 0' 40' 80'
1" = 40'-0" GRAPHIC SCALE

HUI PANG CHEN REGISTERED PROFESSIONAL ENGINEER No. 3865-S HAWAII, U.S.A.

THIS WORK WAS PREPARED BY ME OR UNDER MY SUPERVISION.
Hui Pang Chen

ORIGINAL PLAN | SURVEY PLOTTED BY D. TAGUCHI DATE 1/90 | DRAWN BY | TRACED BY H.P. CHEN 1/90 | DESIGNED BY S. CHUN 3/90 | QUANTITIES BY S. CHUN 1/90 | CHECKED BY | NOTE BOOK No.

FED. ROAD DIST. NO.	STATE	FED. AID PROJ. NO.	FISCAL YEAR	SHEET NO.	TOTAL SHEETS
HAWAII	HAW.	I-H3-1(66)	1992	366	440

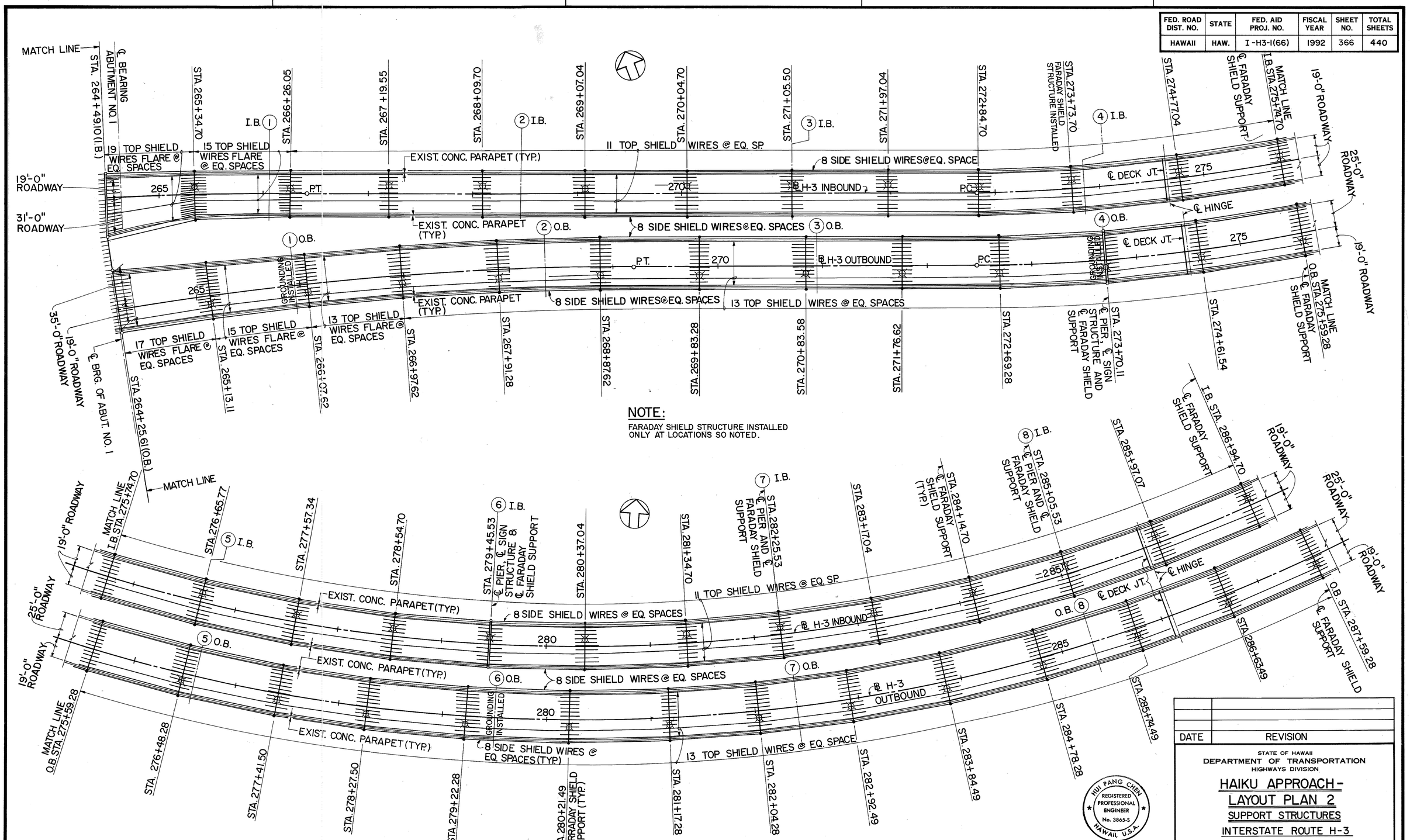

NOTE:

FARADAY SHIELD STRUCTURE INSTALLED ONLY AT LOCATIONS SO NOTED.

PARTIAL PLAN

SCALE : 1" = 40'

ORIGINAL PLAN	
SURVEY PLOTTED BY	
DRAWN BY	D. TRUONG
TRACED BY	
DESIGNED BY	H.P. CHEN
QUANTITIES BY	H.P. CHEN
CHECKED BY	S. CHUN
DATE	1/90
	1/90
	1/90
NOTE BOOK	
No.	

HUI PANG CHEN
REGISTERED PROFESSIONAL ENGINEER
No. 3865-S
HAWAII, U.S.A.

THIS WORK WAS PREPARED BY ME OR UNDER MY SUPERVISION.

Hui pang Chen

DATE	REVISION

STATE OF HAWAII
DEPARTMENT OF TRANSPORTATION
HIGHWAYS DIVISION

HAIKU APPROACH - LAYOUT PLAN 2

SUPPORT STRUCTURES

INTERSTATE ROUTE H-3

F.A.I. PROJ. NO. I-H3-1(66)

SCALE : AS SHOWN DATE : APR. 1992

SHEET No. SS4 OF 36 SHEETS

FED. ROAD DIST. NO.	STATE	FED. AID PROJ. NO.	FISCAL YEAR	SHEET NO.	TOTAL SHEETS
HAWAII	HAW.	I-H3-1(66)	1992	367	440

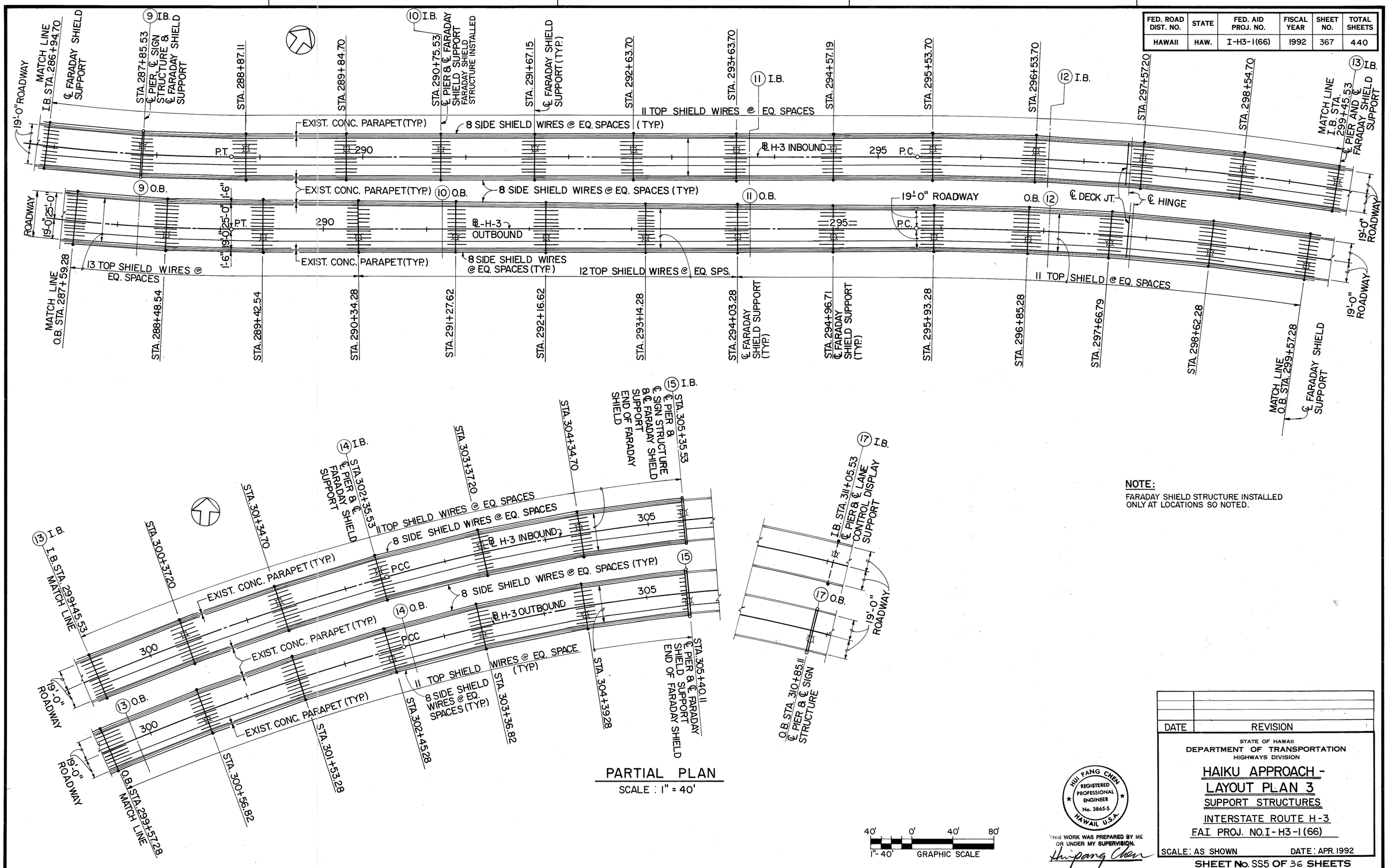

PARTIAL PLAN

SCALE : 1" = 40'

NOTE:

FARADAY SHIELD STRUCTURE INSTALLED ONLY AT LOCATIONS SO NOTED.

ORIGINAL PLAN	SURVEY PLOTTED BY	DATE
	DRAWN BY D. TRUONG	1/96
	TRACED BY	
NOTE BOOK	DESIGNED BY H.S. CHEN	1/96
	QUANTITIES BY S. CHUNG	3/96
No.	CHECKED BY S. CHUNG	1/96

DATE	REVISION

STATE OF HAWAII
DEPARTMENT OF TRANSPORTATION
HIGHWAYS DIVISION

HAIKU APPROACH - LAYOUT PLAN 3

SUPPORT STRUCTURES

INTERSTATE ROUTE H-3

F.A.I. PROJ. NO. I-H3-1(66)

SCALE: AS SHOWN DATE: APR. 1992

HUI PANG CHEN REGISTERED PROFESSIONAL ENGINEER No. 3865-S HAWAII, U.S.A.

THIS WORK WAS PREPARED BY ME OR UNDER MY SUPERVISION.

Hui Pang Chen

SHEET No. SS5 OF 36 SHEETS

FED. ROAD DIST. NO.	STATE	FED. AID PROJ. NO.	FISCAL YEAR	SHEET NO.	TOTAL SHEETS
HAWAII	HAW.	I-H3-1(66)	1992	368	440

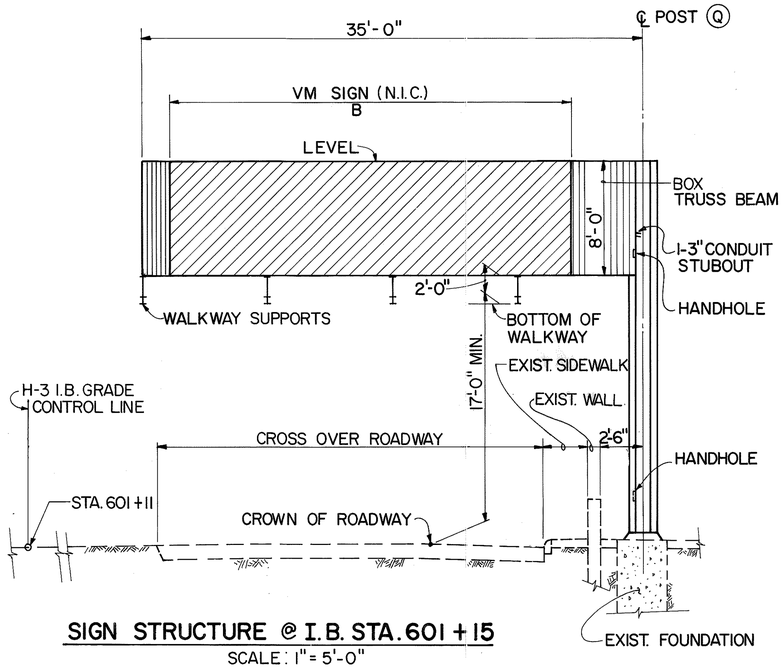

SIGN STRUCTURE @ I.B. STA. 601+15

SCALE: 1" = 5'-0"

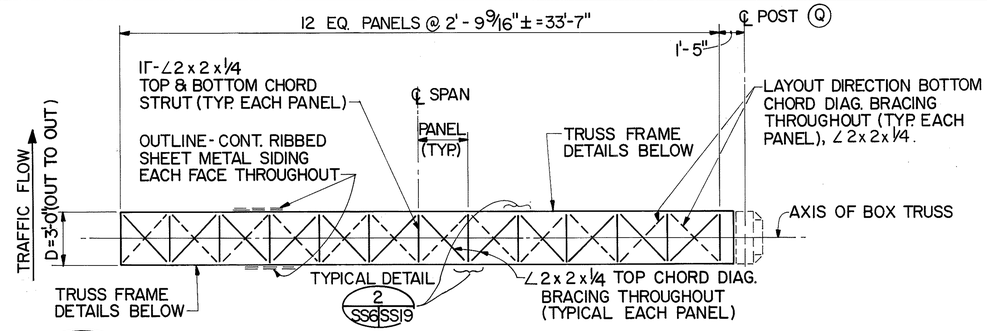

A SS6 SS6 PLAN - TOP CHORD WIND BRACE FRAMING - AS SHOWN

(BOTTOM CHORD SIMILAR EXCEPT AS OTHERWISE NOTED)

SCALE: 1/4" = 1'-0"

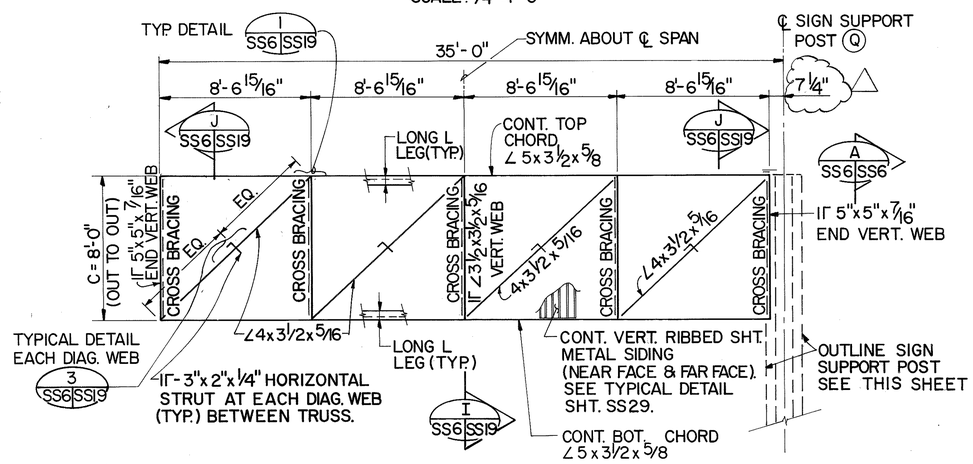

ELEVATION - TRUSS FRAMING DETAIL

AT I.B. STA. 601+11

SCALE: 1/4" = 1'-0"

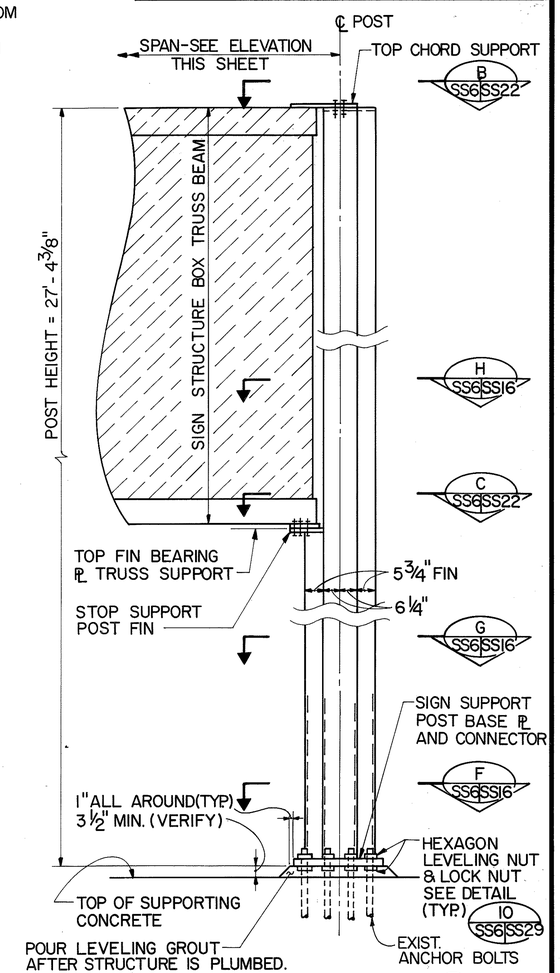

ELEVATION FOR POST Q

SCALE: 1/2" = 1'-0"

NOTES:

1. FOR LOCATIONS OF SIGNS AND WALKWAY SUPPORTS, SEE SHEET NO. SS25.
2. FOR BOX TRUSS CONNECTION DETAILS, SEE SHEET NO. SS19.

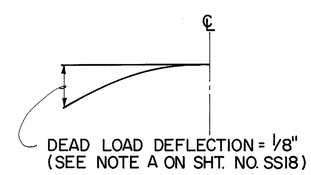

DEAD LOAD DEFLECTION @ I.B. STA. 601+15

N.T.S.

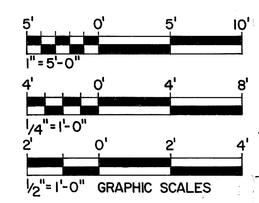

HUI PANG CHEN REGISTERED PROFESSIONAL ENGINEER No. 3865-S HAWAII, U.S.A.

THIS WORK WAS PREPARED BY ME OR UNDER MY SUPERVISION.

Hu Pang Chen

DATE	REVISION
2/24/94	CLARIFY DIMENSIONS PER DCN 66-036

STATE OF HAWAII
DEPARTMENT OF TRANSPORTATION
HIGHWAYS DIVISION

HALAWA APPROACH - SECTION I

SUPPORT STRUCTURES
INTERSTATE ROUTE H-3
F.A.I. PROJ. NO. I-H3-1(66)

SCALE: AS SHOWN DATE: APR. 1992

SHEET No. SS6 OF 36 SHEETS

ORIGINAL PLAN		DATE
	SURVEY PLOTTED BY	
	DRAWN BY R. MALALUAN	11/90
NOTE BOOK	TRACED BY	
	DESIGNED BY S. CHUN	11/90
	QUANTITIES BY S. CHUN	2/92
No.	CHECKED BY H. P. CHEN	11/90

FED. ROAD DIST. NO.	STATE	FED. AID PROJ. NO.	FISCAL YEAR	SHEET NO.	TOTAL SHEETS
HAWAII	HAW.	I-H3-1(66)	1992	369	440

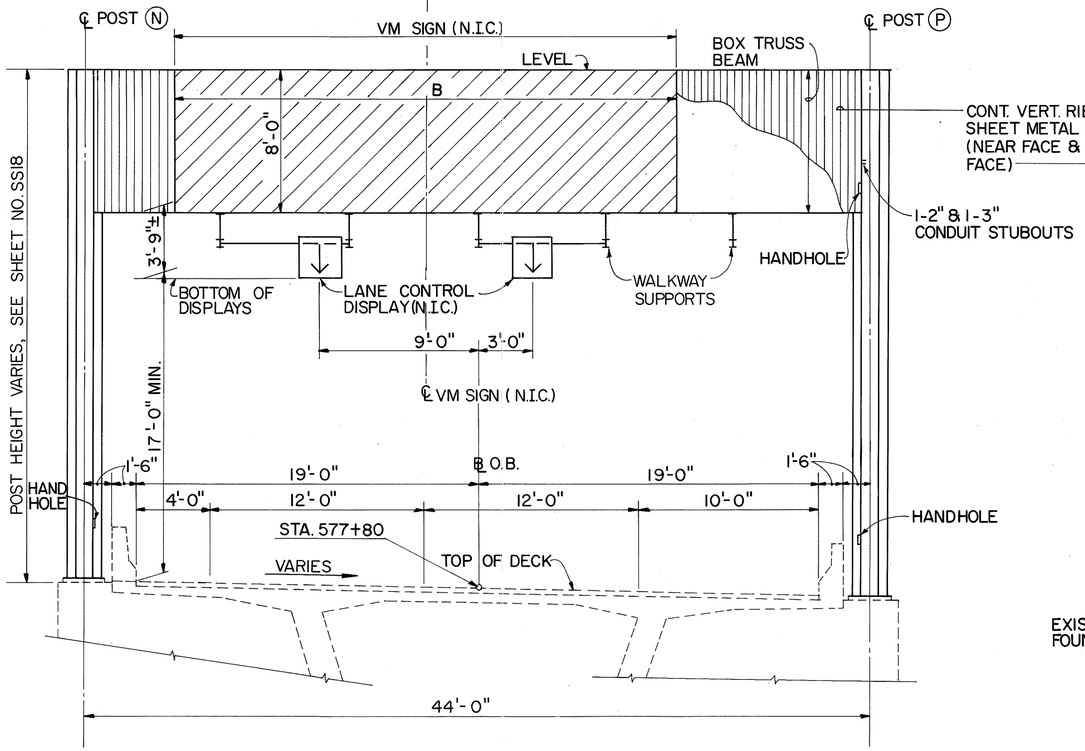

SIGN STRUCTURE @ O.B. STA. 577+80

(@ O.B STA. 554+60, N.I.C.)

SCALE: 1/4" = 1'-0"

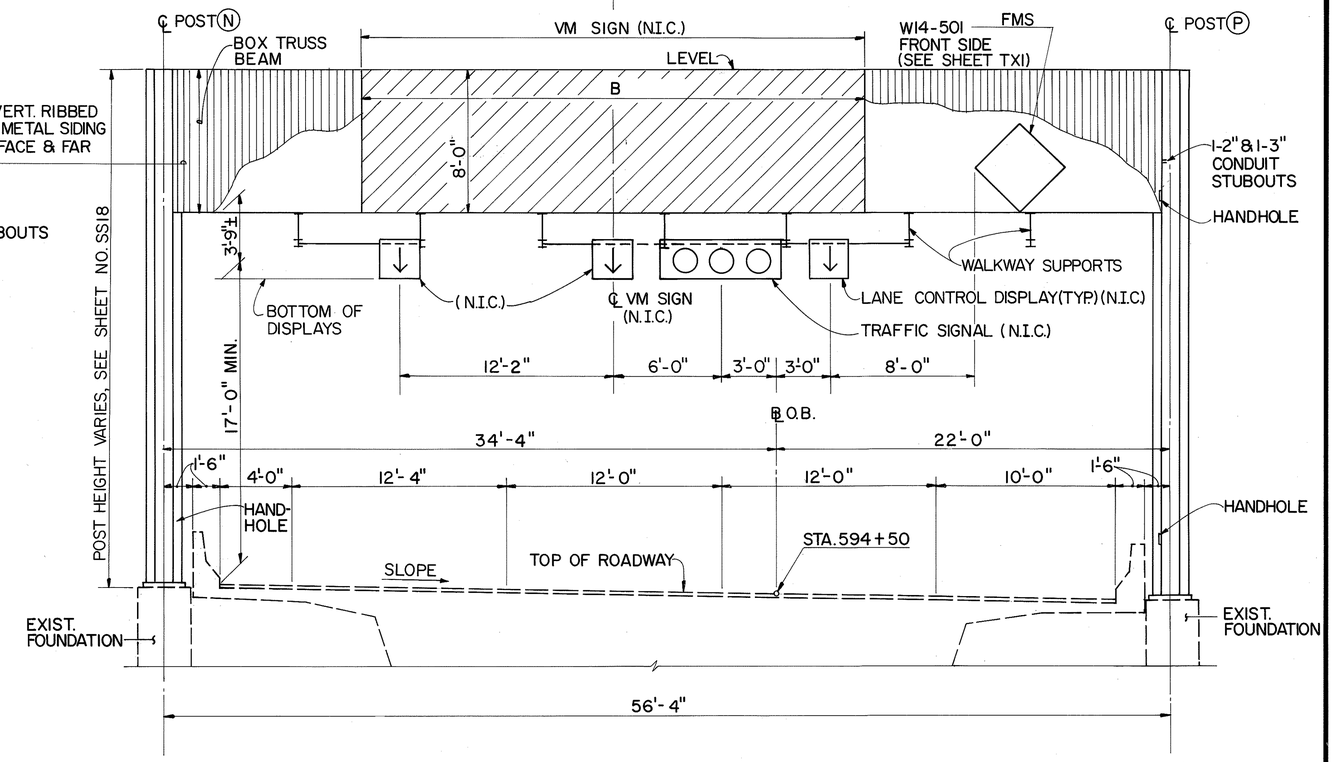

SIGN STRUCTURE @ O.B. STA. 594+50

SCALE: 1/4" = 1'-0"

NOTE: FOR LOCATIONS OF SIGNS, WALKWAY SUPPORTS & LANE CONTROL DISPLAYS, SEE SHEET NO. SS25.

ORIGINAL PLAN	SURVEY PLOTTED BY	DATE
	DRAWN BY R. MALALUAN	1/90
	TRACED BY K. WATA	1/90
NOTE BOOK	DESIGNED BY	3/90
	QUANTITIES BY K. ZUHN	1/90
No.	CHECKED BY S. ZUHN	

HUI PANG CHEN
REGISTERED PROFESSIONAL ENGINEER
No. 3865-S
HAWAII, U.S.A.

THIS WORK WAS PREPARED BY ME OR UNDER MY SUPERVISION.

Hui Pang Chen

4' 0' 4' 8'
1/4" = 1'-0" GRAPHIC SCALE

DATE	REVISION

STATE OF HAWAII
DEPARTMENT OF TRANSPORTATION
HIGHWAYS DIVISION

HALAWA APPROACH-
SECTION 2

SUPPORT STRUCTURES
INTERSTATE ROUTE H-3
F.A.I. PROJ. NO. I-H3-1(66)

SCALE: AS SHOWN DATE: APR. 1992

SHEET No. SS7 OF 36 SHEETS

FED. ROAD DIST. NO.	STATE	FED. AID PROJ. NO.	FISCAL YEAR	SHEET NO.	TOTAL SHEETS
HAWAII	HAW.	I-H3-1 (66)	1992	370	440

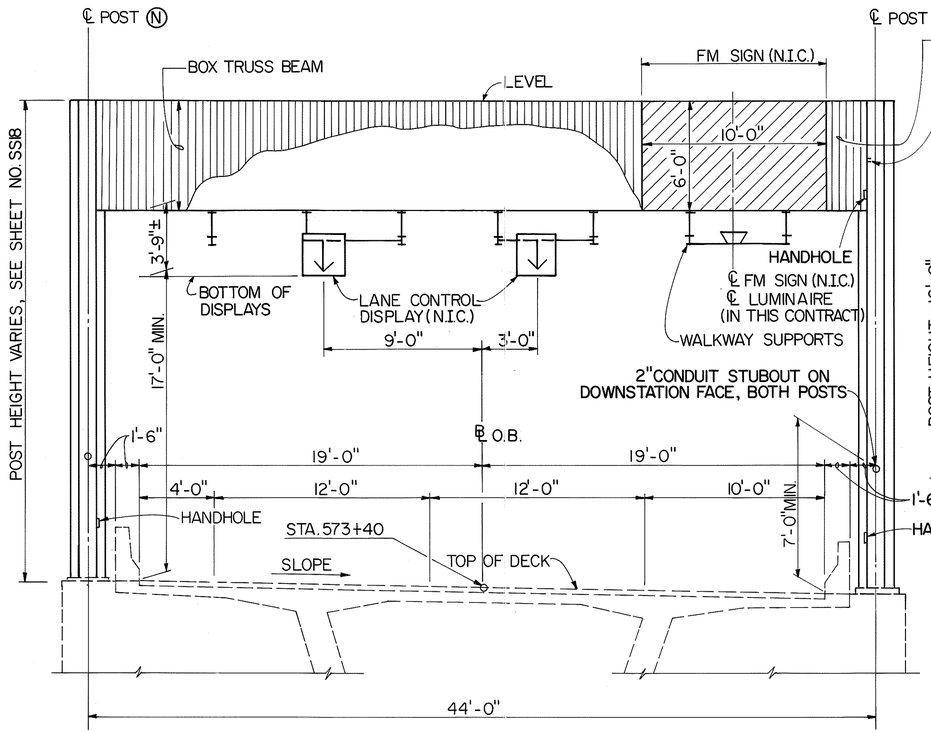

NOTE:
FOR LOCATIONS OF SIGNS, WALKWAY SUPPORTS, LANE CONTROL DISPLAYS AND SIGN LUMINAIRES, SEE SHEET NO. SS25

SIGN STRUCTURE AT O.B. STA. 573+40

SCALE: 1/4" = 1'-0"

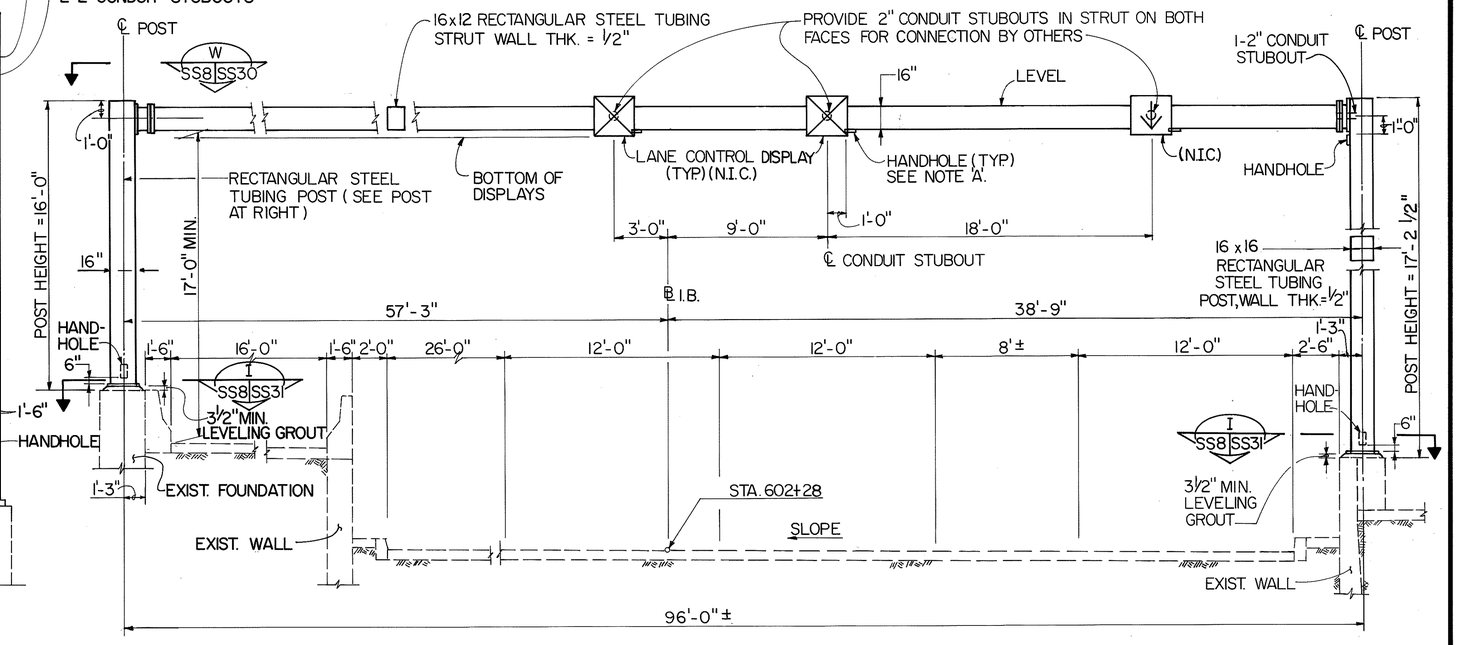

LANE CONTROL DISPLAY SUPPORT AT I.B. STA. 602+28

SCALE: 1/4" = 1'-0"

NOTE 'A':

PLACE HANDHOLE ON BOTTOM-SIDE OF STRUST WHERE CONDUIT STUBOUTS ARE PROVIDED. NEAREST EDGE OF HANDHOLE COVER PL IS 1'-0" FROM ℄ CONDUIT STUBOUT & CENTERED ABOUT ℄ STRUT.

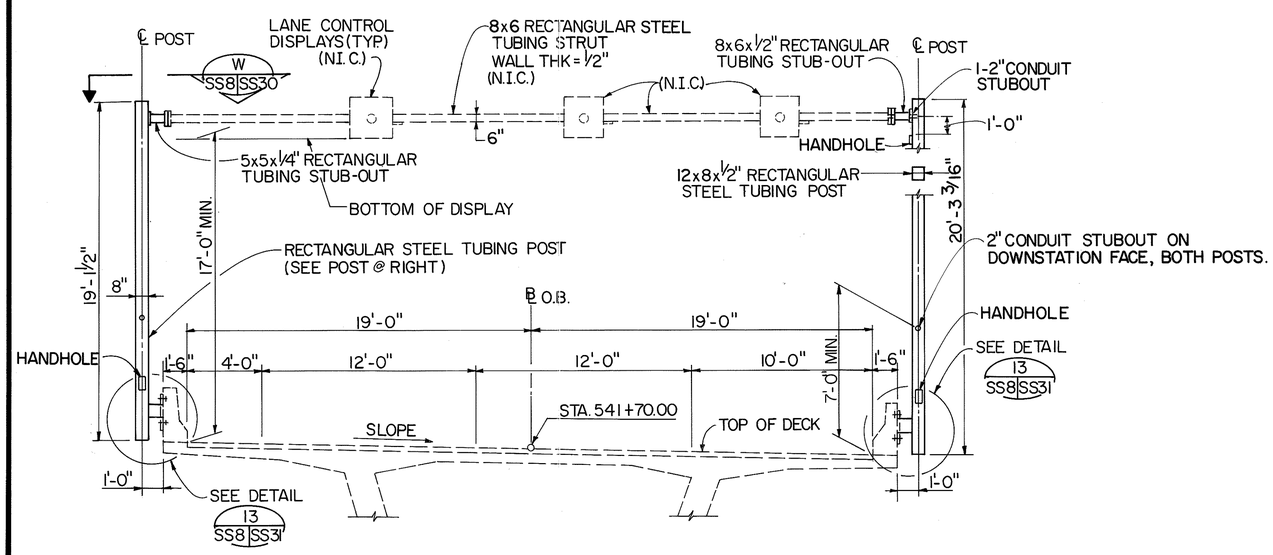

LANE CONTROL DISPLAY SUPPORT @ O.B. STA. 541+70

SCALE: 1/4" = 1'-0"

ORIGINAL PLAN	
NOTE BOOK	
No.	
SURVEY PLOTTED BY	
DRAWN BY	E. FUJIENG
TRACED BY	
DESIGNED BY	K. WADA
QUANTITIES BY	S. CHUN
CHECKED BY	S. CHUN
DATE	1/90
	1/90
	2/90
	1/90

4' 0' 4' 8'
1/4" = 1'-0" GRAPHIC SCALE

HUI PANG CHEN
REGISTERED PROFESSIONAL ENGINEER
No. 3865-S
HAWAII, U.S.A.

THIS WORK WAS PREPARED BY ME OR UNDER MY SUPERVISION.
Hui Pang Chen

DATE	REVISION

STATE OF HAWAII
DEPARTMENT OF TRANSPORTATION
HIGHWAYS DIVISION

HALAWA APPROACH-SECTION 3

SUPPORT STRUCTURES
INTERSTATE ROUTE H-3
F.A.I. PROJ. NO. I-H3-1 (66)

SCALE: AS SHOWN DATE: APR. 1992

SHEET No. SS8 OF 36 SHEETS

FED. ROAD DIST. NO.	STATE	FED. AID PROJ. NO.	FISCAL YEAR	SHEET NO.	TOTAL SHEETS
HAWAII	HAW.	I-H3-1(66)	1992	371	440

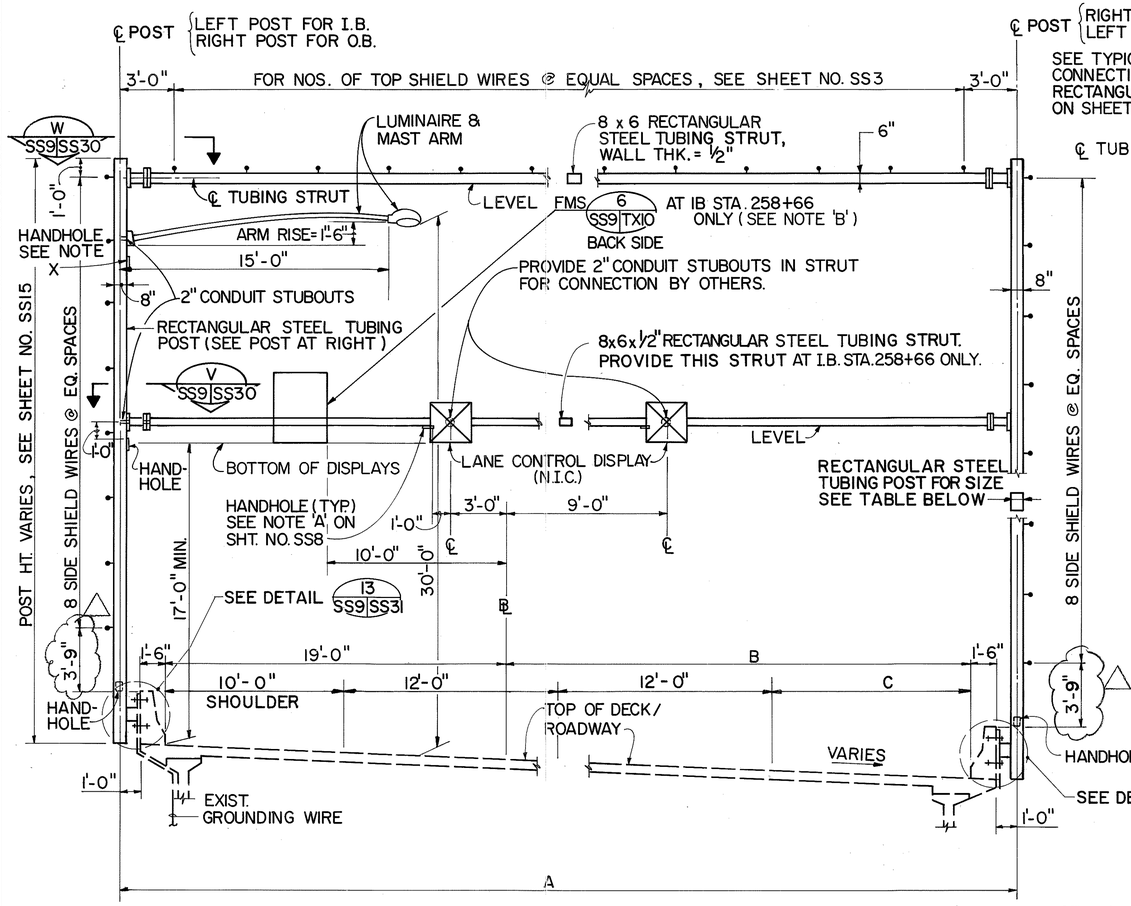

TYPICAL PARAPET MOUNTED FARADAY SHIELD SUPPORT ON HAIKU BRIDGES

SCALE: 1/4" = 1'-0"

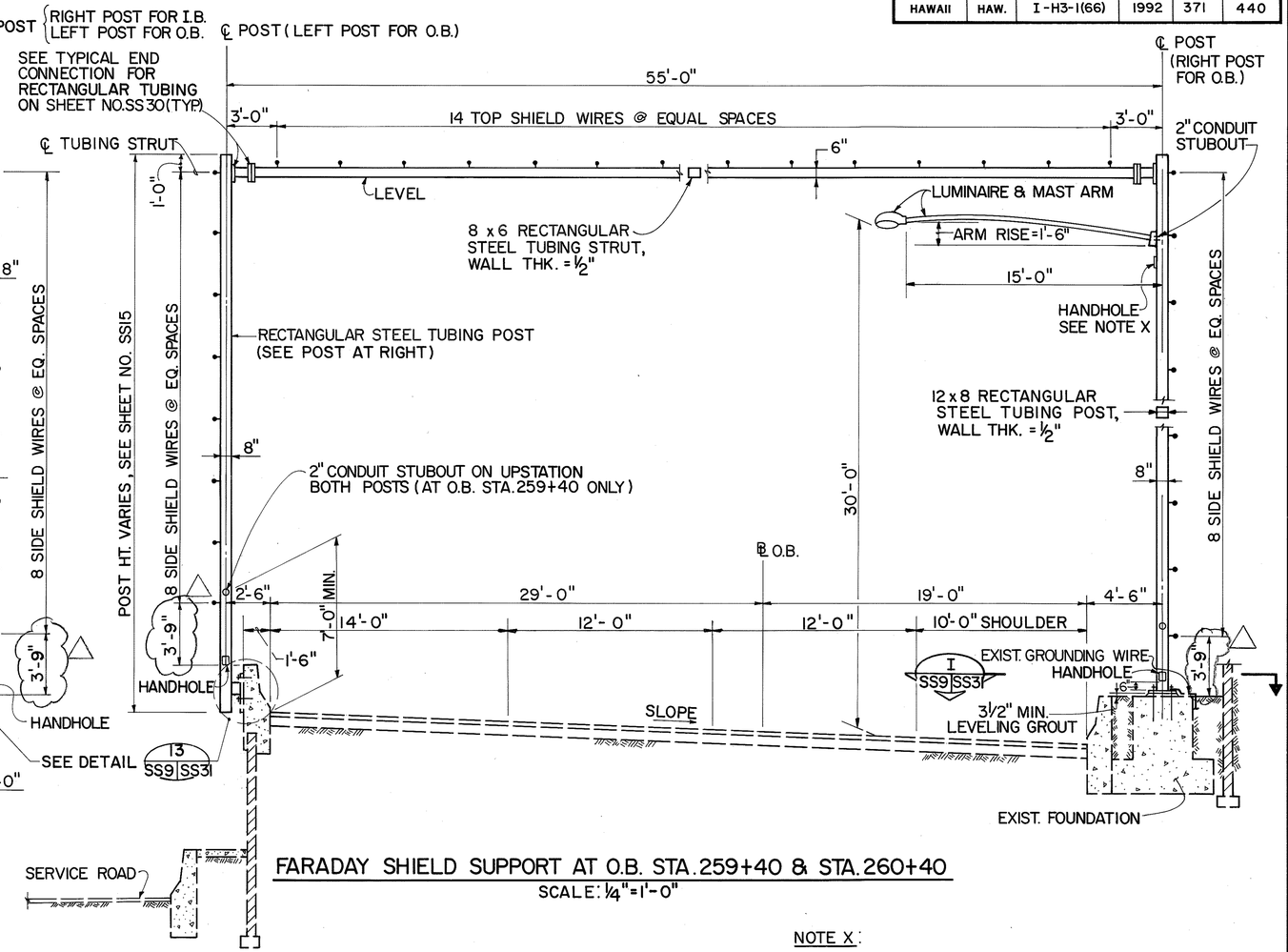

FARADAY SHIELD SUPPORT AT O.B. STA. 259+40 & STA. 260+40

SCALE: 1/4" = 1'-0"

NOTE: TYPICAL I.B. FARADAY SHIELD SUPPORT SHOWN. TYPICAL O.B. FARADAY SHIELD SUPPORT IS OPPOSITE-HAND OF I.B. SUPPORT.

NOTE B: SEE SHEET NO. TX11 FOR SIGN MOUNTING DETAILS.

NOTE X:

PLACE HANDHOLE IN SUPPORT POSTS FOR ACCESS WHERE CONDUIT STUBOUT FOR LUMINAIRE WIRING IS PROVIDED. TOP OF HANDHOLE COVER PLATE IS 1'-0" BELOW ℄ CONDUIT STUBOUT & CENTERED ABOUT ℄ SUPPORT POST.

FARADAY SHIELD SUPPORT LOCATIONS	RECTANGULAR TUBING POST SIZE	A	B	C
I. B. STA. 257+51	16x 8 x 0.5"	51'	27'	12'
I. B. STA. 258+66	12 x 8 x 0.5"	51'	27'	12'
I. B. STA. 259+70	12x 8 x 0.5"	51'	27'	12'
I. B. STA. 260+70	12 x 8 x 0.5"	51'	27'	12'
I. B. STA. 261+70	12 x 8 x 0.5"	52'-11 7/8"	28'-11 7/8"	12'
O. B. STA. 258+40	12 x 8 x 0.5"	53'	29'	14'

DATE	REVISION
10/26/93	CHANGED 3'-7" DIMENSION TO 3'-9" PER DCN 66-023

STATE OF HAWAII
DEPARTMENT OF TRANSPORTATION
HIGHWAYS DIVISION

HAIKU APPROACH - SECTION 1

SUPPORT STRUCTURES

INTERSTATE ROUTE H-3

F.A.I. PROJ. NO. I-H3-1(66)

SCALE: AS SHOWN DATE: APR. 1992

SHEET NO. SS9 OF 36 SHEETS

HUI PANG CHEN REGISTERED PROFESSIONAL ENGINEER No. 3865-S HAWAII, U.S.A.

THIS WORK WAS PREPARED BY ME OR UNDER MY SUPERVISION.

Hui Pang Chen

4' 0' 4' 8'
1/4" = 1'-0" GRAPHIC SCALE

ORIGINAL PLAN | SURVEY PLOTTED BY | DRAWN BY D. TALONG | TRACED BY | DESIGNED BY K. WADA | QUANTITIES BY S. CHUN | CHECKED BY S. CHUN | DATE 11/90 11/90 3/92 11/90 | NOTE BOOK | No.

FED. ROAD DIST. NO.	STATE	FED. AID PROJ. NO.	FISCAL YEAR	SHEET NO.	TOTAL SHEETS
HAWAII	HAW.	I-H3-1(66)	1992	372	440

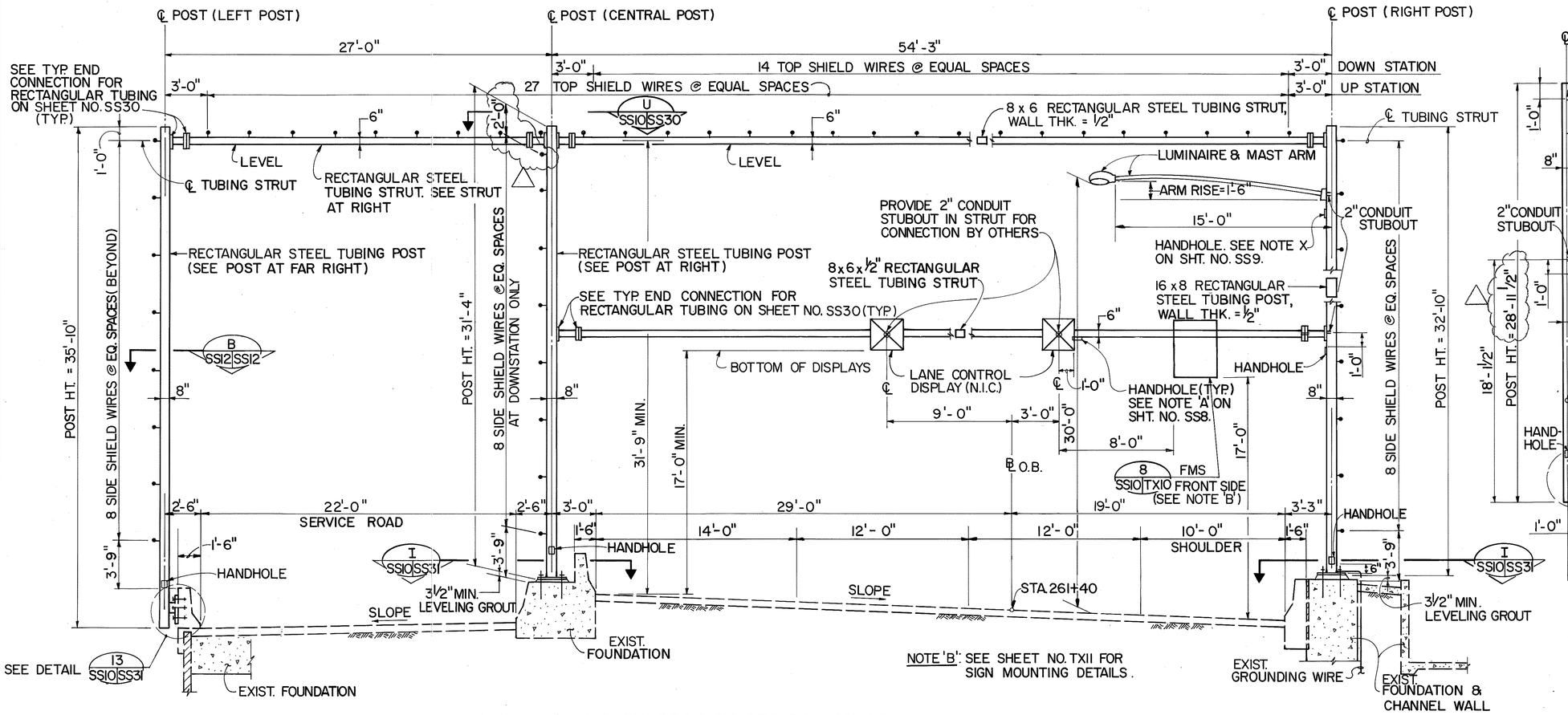

NOTE 'B': SEE SHEET NO. TX11 FOR SIGN MOUNTING DETAILS.

FARADAY SHIELD SUPPORT AT STA. 261+40 O.B.

SCALE: 1/4" = 1'-0"

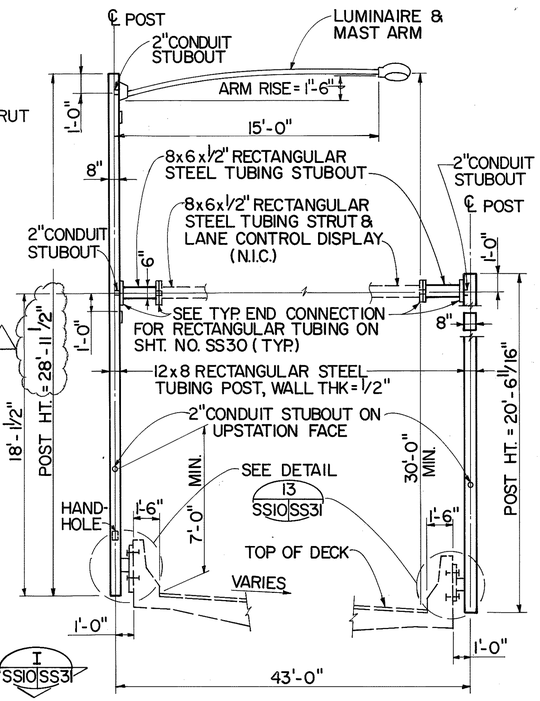

LANE CONTROL DISPLAY SUPPORT AT I.B. STA. 311+05.53

SCALE: 1/4" = 1'-0"

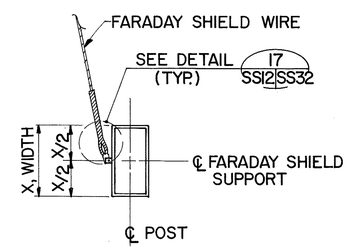

SECTION B SS12 SS12
N.T.S.

DATE	REVISION
12/29/93	REV. POST HEIGHT PER DCN 66-027
10/26/93	CHANGED 3'-7" DIMENSION TO 3'-9" PER DCN 66-023

STATE OF HAWAII
DEPARTMENT OF TRANSPORTATION
HIGHWAYS DIVISION

HAIKU APPROACH - SECTION 2
SUPPORT STRUCTURES
INTERSTATE ROUTE H-3
F.A.I. PROJ. NO. I-H3-1(66)

SCALE: AS SHOWN DATE: APR. 1992

SHEET NO. SS10 OF 36 SHEETS

4' 0' 4' 8'
1/4" = 1'-0" GRAPHIC SCALE

HUI PANG CHEN REGISTERED PROFESSIONAL ENGINEER No. 3865-S HAWAII, U.S.A.

THIS WORK WAS PREPARED BY ME OR UNDER MY SUPERVISION.

Hui Pang Chen

ORIGINAL PLAN		DATE
SURVEY PLOTTED BY		
DRAWN BY	D. TAKUNG	1/90
TRACED BY	K. WADA	1/90
DESIGNED BY	S. CHUN	2/90
QUANTITIES BY		
CHECKED BY	S. CHUN	1/90
NOTE BOOK		
No.		

FED. ROAD DIST. NO.	STATE	FED. AID PROJ. NO.	FISCAL YEAR	SHEET NO.	TOTAL SHEETS
HAWAII	HAW.	I-H3-1(66)	1992	373	440

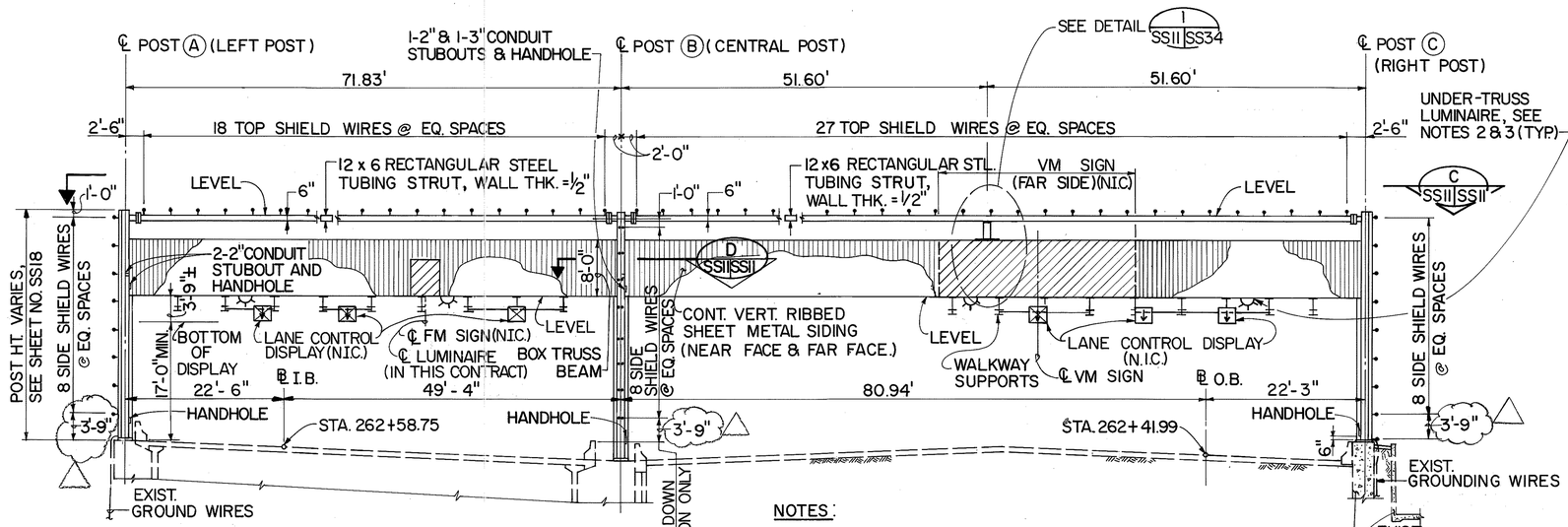

SECTION A
SCALE: 1" = 10'-0" SS3 SS11

NOTES:

1. FOR LOCATIONS OF SIGNS, WALKWAY SUPPORTS, LANE CONTROL DISPLAYS AND SIGN LUMINAIRE SEE SHEET NO. SS26.
2. LOCATE UNDER-TRUSS LUMINAIRE (⌔) MID-WAY BETWEEN WALKWAY SUPPORTS.
3. FOR UNDER-TRUSS LUMINAIRE (⌔) MOUNTING DETAILS SEE SHEET NO. EB19.

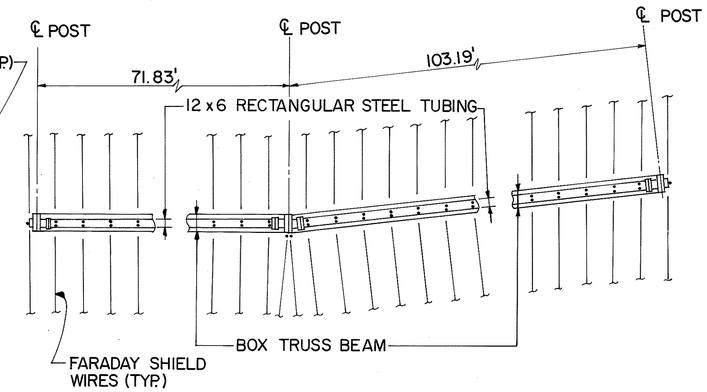

VIEW C
SCALE: 1" = 1'-0" SS11 SS11

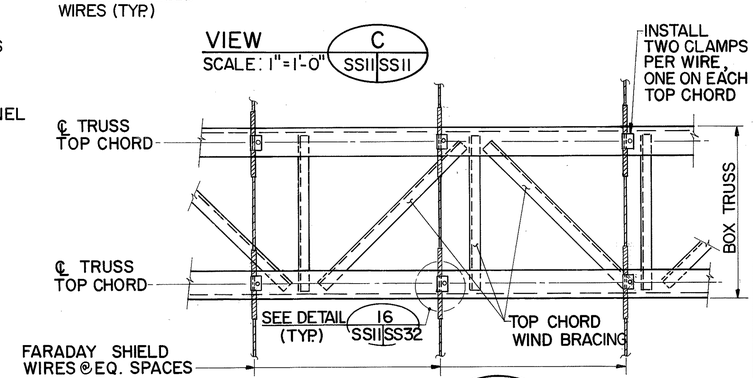

SECTION F
N.T.S. SS11 SS11

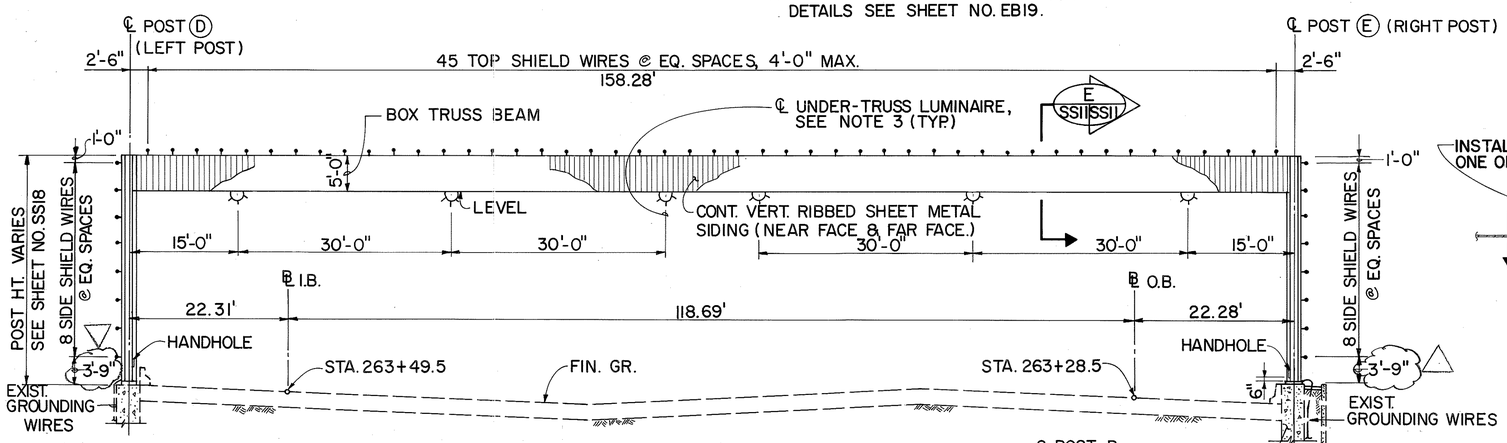

SECTION B
SCALE: 1" = 10'-0" SS3 SS11

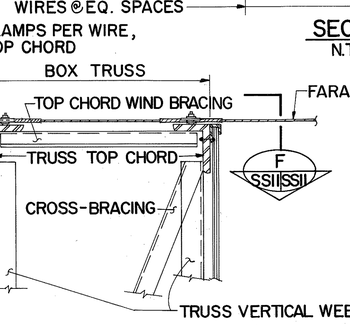

SECTION E
N.T.S. SS11 SS11

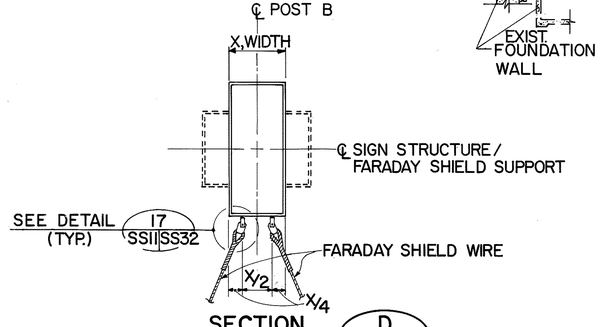

SECTION D
SCALE: 3/4" = 1'-0" SS11 SS11

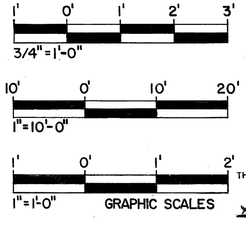

HUI PANG CHEN REGISTERED PROFESSIONAL ENGINEER No. 3865-S HAWAII, U.S.A.

THIS WORK WAS PREPARED BY ME OR UNDER MY SUPERVISION.

Hui Pang Chen

DATE	REVISION
10/26/93	CHANGED 3'-7" DIMENSION TO 3'-9" PER DCN 66-023
5-25-93	REVISED SECTIONS E & F PER DCN 66-008

STATE OF HAWAII
DEPARTMENT OF TRANSPORTATION
HIGHWAYS DIVISION

HAIKU APPROACH - SECTION 3

SUPPORT STRUCTURES

INTERSTATE ROUTE H-3
F.A.I PROJ. NO. I-H3-(66)

SCALE: AS SHOWN DATE: APR. 1992

SHEET NO. SS11 OF 36 SHEETS

ORIGINAL PLAN	SURVEY PLOTTED BY	DATE
	DRAWN BY K. WALAHAN	7/90
NOTE BOOK	TRACED BY	
	DESIGNED BY K. WADA	7/90
	QUANTITIES BY S. CHUN	3/92
No.	CHECKED BY S. CHUN	7/90

FED. ROAD DIST. NO.	STATE	FED. AID PROJ. NO.	FISCAL YEAR	SHEET NO.	TOTAL SHEETS
HAWAII	HAW.	I-H3-1(66)	1992	374	440

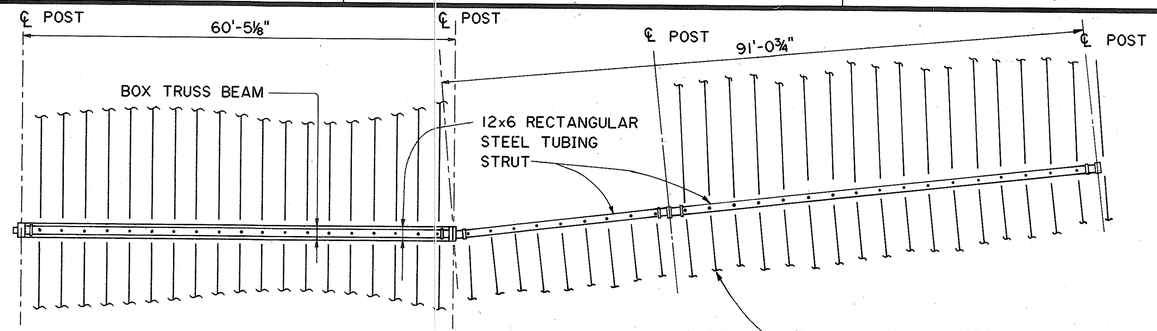

VIEW
SCALE: 1" = 10'-0"
A SS12 | SS12

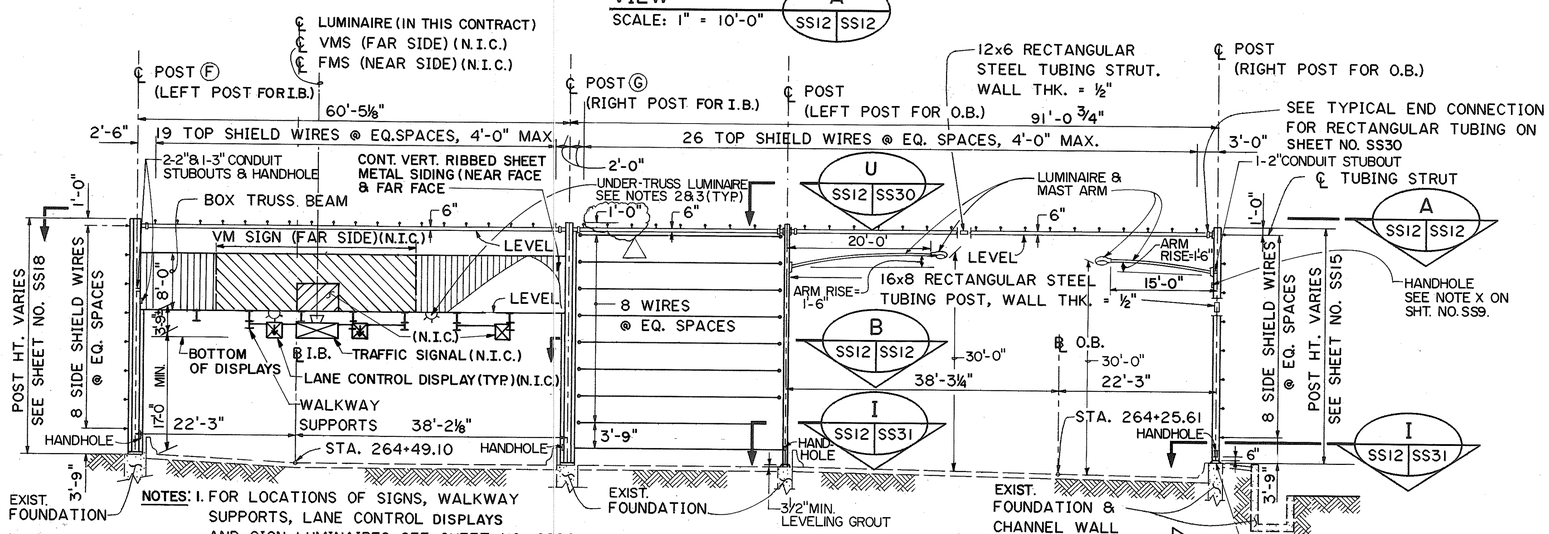

NOTES:
1. FOR LOCATIONS OF SIGNS, WALKWAY SUPPORTS, LANE CONTROL DISPLAYS AND SIGN LUMINAIRES SEE SHEET NO. SS26.
2. LOCATE UNDER-TRUSS LUMINAIRE (⊽) MID-WAY BETWEEN WALKWAY SUPPORTS.
3. FOR UNDER-TRUSS LUMINAIRE (⊽) MOUNTING DETAILS SEE SHEET NO. EB19.

SECTION
SCALE: 1" = 10'-0"
C SS3 | SS12

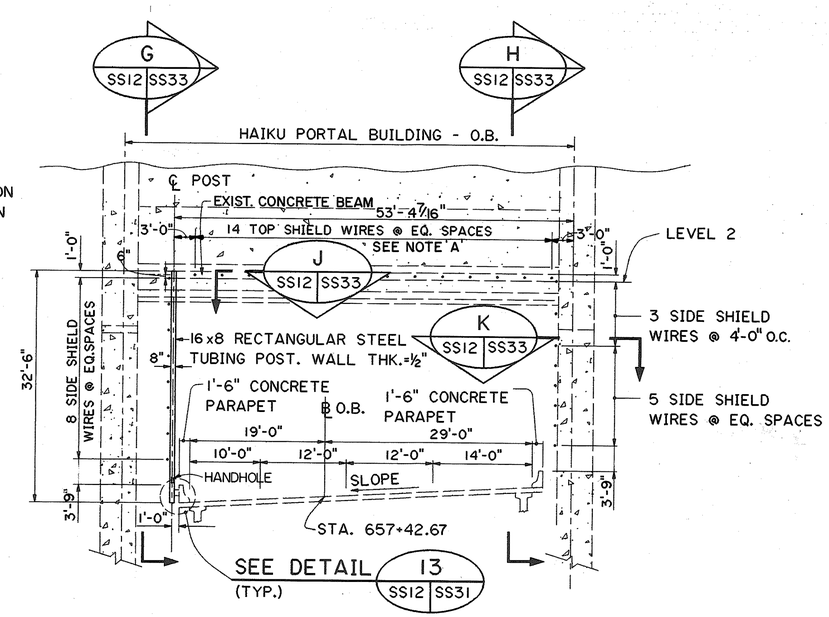

SECTION
SCALE: 1" = 10'-0"
F SS3 | SS12

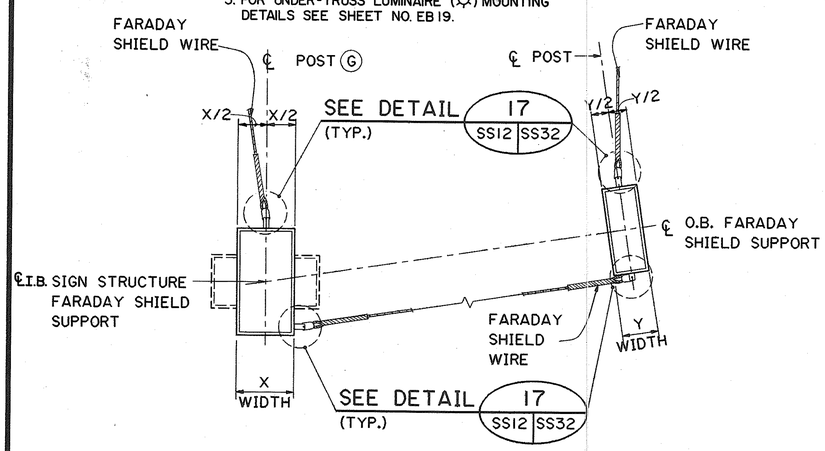

SECTION
N.T.S.
B SS12 | SS12

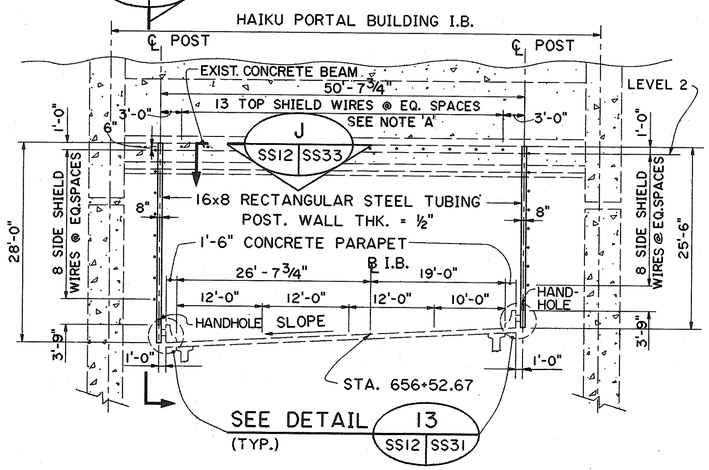

SECTION
SCALE: 1" = 10'-0"
E SS3 | SS12

NOTE:
'A' PRIOR TO INSTALLATION OF SHIELD WIRES, CONTRACTOR SHALL VERIFY THE TOP SHIELD WIRE SPACINGS WITH THE EXISTING CONCRETE INSERTS IN PORTAL BUILDING BEAM. THE CONTRACTOR SHALL ALSO SUBMIT THE SURVEYED LOCATIONS OF THE INSERTS TO THE ENGINEER FOR REVIEW.

GRAPHIC SCALE
10' 0' 10' 20'
1" = 10'

DATE	REVISION
12/29/93	REV. LOCATION OF TOP SHIELD WIRE FROM TOP OF POST (SECT 'C') PER DCN 66-027
10/26/93	CHANGED 3'-7" DIMENSION TO 3'-9" PER DCN 66-023
5-25-93	ADDED NOTE 'A' TO SECTIONS E & F PER DCN 66-008

STATE OF HAWAII
DEPARTMENT OF TRANSPORTATION
HIGHWAYS DIVISION

HAIKU APPROACH-SECTION 4
SUPPORT STRUCTURES
INTERSTATE ROUTE H-3
F.A.I. PROJ. NO. I-H3-1(66)

HUI PANG CHEN
REGISTERED PROFESSIONAL ENGINEER
No. 3865-S
HAWAII, U.S.A.

THIS WORK WAS PREPARED BY ME OR UNDER MY SUPERVISION
Hui Pang Chen

SCALE: AS SHOWN DATE: APR. 1992

SHEET NO. SS12 OF 36 SHEETS

ORIGINAL PLAN | SURVEY PLOTTED BY | DRAWN BY | NOTE BOOK | TRACED BY | DESIGNED BY S. CHUN | QUANTITIES BY | CHECKED BY K. WADA | DATE 11/90 3/92 11/90 | NO.

2410V138 2410: V138 SS0163.FGB:1 26SEP89-10.32.20

FED. ROAD DIST. NO.	STATE	FED. AID PROJ. NO.	FISCAL YEAR	SHEET NO.	TOTAL SHEETS
HAWAII	HAW.	I-H3-1(66)	1992	375	440

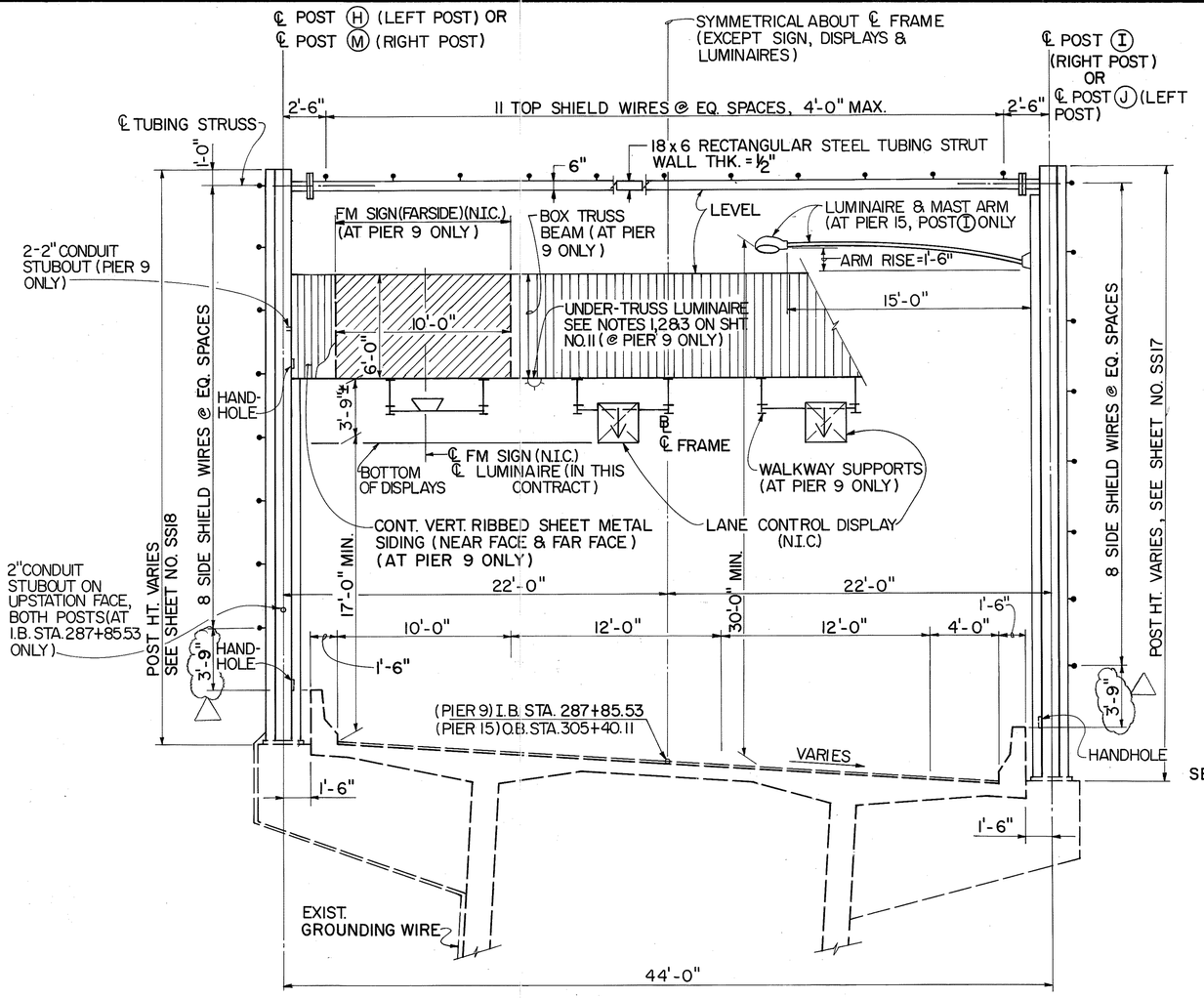

TYPICAL FOR I.B. STA. 287+85.53 (PIER 9)
(LEFT POST (H) AS SHOWN, RIGHT POST (M) SIMILAR EXCEPT OPPOSITE HAND.)

TYPICAL FOR O.B. STA. 305+40.11 (PIER 15)
(RIGHT POST (I) AS SHOWN, LEFT POST (J) SIMILAR EXCEPT OPPOSITE HAND)

SIGN STRUCTURE / FARADAY SHIELD SUPPORT @ I.B. STA. 287+85.53 & O.B. STA. 305+40.11

SCALE : 1/4" = 1'-0"

NOTE: FOR LOCATIONS OF SIGNS, WALKWAY SUPPORTS, LANE CONTROL DISPLAYS & SIGN LUMINAIRES, SEE SHEET NO. SS26.

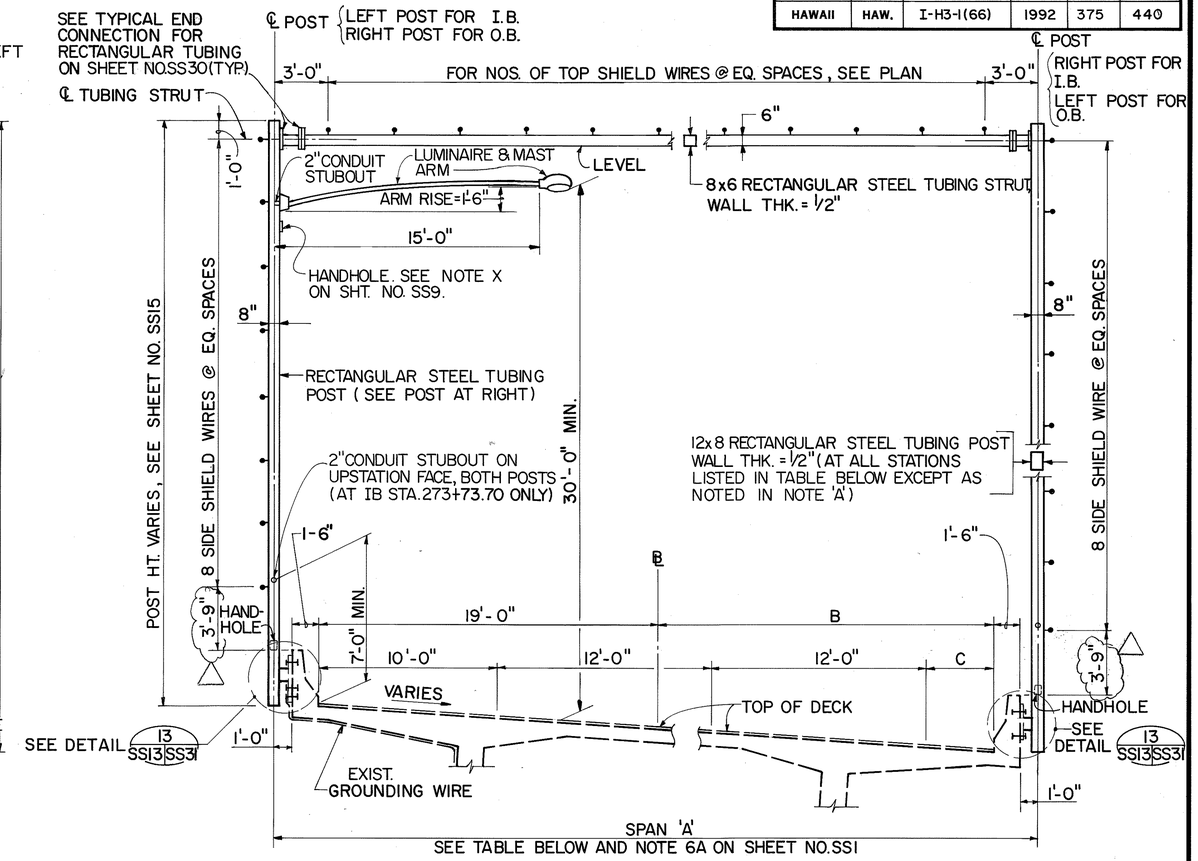

TYPICAL PARAPET MOUNTED FARADAY SHIELD SUPPORT ON WINDWARD VIADUCT

SCALE : 1/4" = 1'-0"

FARADAY SHIELD SUPPORT LOCATIONS	A	B	C
O.B. STA. 265 + 13.11	57.41'	33.41'	18.41'
O.B. STA. 266 + 07.62	52.94'	28.94'	13.94'
O.B. STA. 266+97.62 TO O.B. STA. 294+96.71*	49'	25'	10'
O.B. STA. 295+93.28 TO O.B. STA. 304+39.28 AND I.B. STA. 266+26.05 TO I.B. STA. 304+34.70*	43'	19'	4'
I.B. STA. 265+34.70	46'	22'	7'

*EXCLUDE FARADAY SHIELD SUPPORT LOCATIONS WITH SIGN STRUCTURES (O.B. STA. 273+70.11, O.B. STA. 305+40.11, I.B. STA. 279+45.53, I.B. STA. 287+85.53, & I.B. STA. 305+35.53)

NOTE 'A': PROVIDE 16x8 RECTANGULAR STEEL TUBING POST WALL THK. = 1/2" AT O.B. STA. 297+66.79, O.B. STA. 304+39.28, I.B. STA. 273+73.70 & I.B. STA. 297+57.20

4' 0' 4' 8'
1/4" = 1'-0" GRAPHIC SCALE

NOTE: TYPICAL I.B. FARADAY SHIELD SUPPORT SHOWN. TYPICAL O.B. FARADAY SHIELD SUPPORT IS OPPOSITE-HAND OF I.B. SUPPORT.

HUI PANG CHEN REGISTERED PROFESSIONAL ENGINEER No. 3865-S HAWAII, U.S.A.

THIS WORK WAS PREPARED BY ME OR UNDER MY SUPERVISION.
Hui Pang Chen

DATE	REVISION
10/26/93	CHANGED 3'-7" DIMENSION TO 3'-9" PER DCN 66-023

STATE OF HAWAII
DEPARTMENT OF TRANSPORTATION
HIGHWAYS DIVISION

HAIKU APPROACH - SECTION 5
SUPPORT STRUCTURES
INTERSTATE ROUTE H-3
F.A.I. PROJ. NO. I-H3-1(66)

SCALE: AS SHOWN DATE: APR. 1992

SHEET No. SS13 OF 36 SHEETS

ORIGINAL PLAN
SURVEY PLOTTED BY
DRAWN BY R. KUONG DATE 1/90
TRACED BY
DESIGNED BY S. CHUN 1/90
QUANTITIES BY S. CHUN 1/90
CHECKED BY K. WADA 1/90
NOTE BOOK
No.

FED. ROAD DIST. NO.	STATE	FED. AID PROJ. NO.	FISCAL YEAR	SHEET NO.	TOTAL SHEETS
HAWAII	HAW.	I-H3-1(66)	1992	376	440

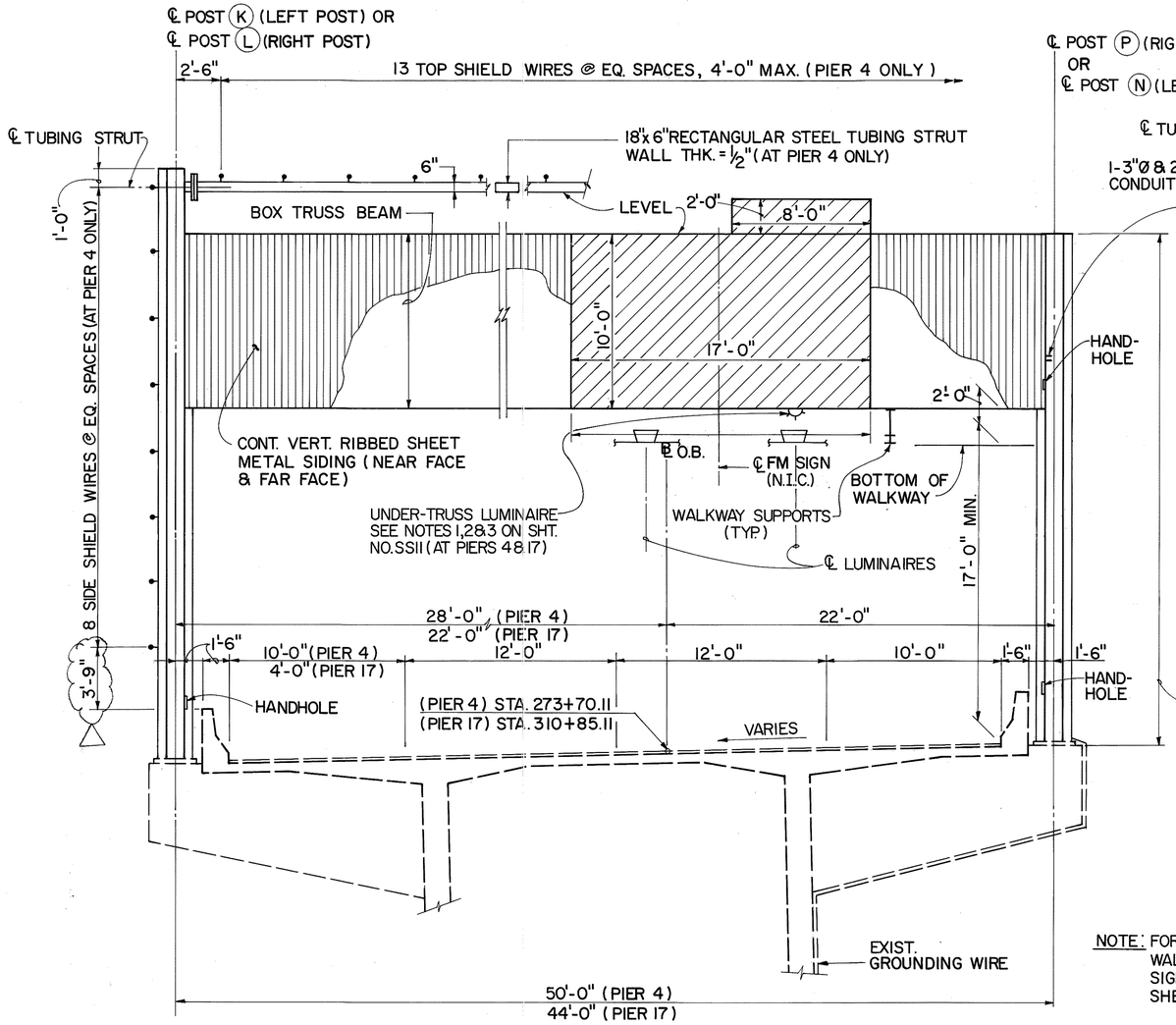

TYPICAL FOR O.B. STA. 273+70.11 (PIER 4)
(LEFT POST (K) AS SHOWN, RIGHT POST (L) SIMILAR EXCEPT OPPOSITE HAND)

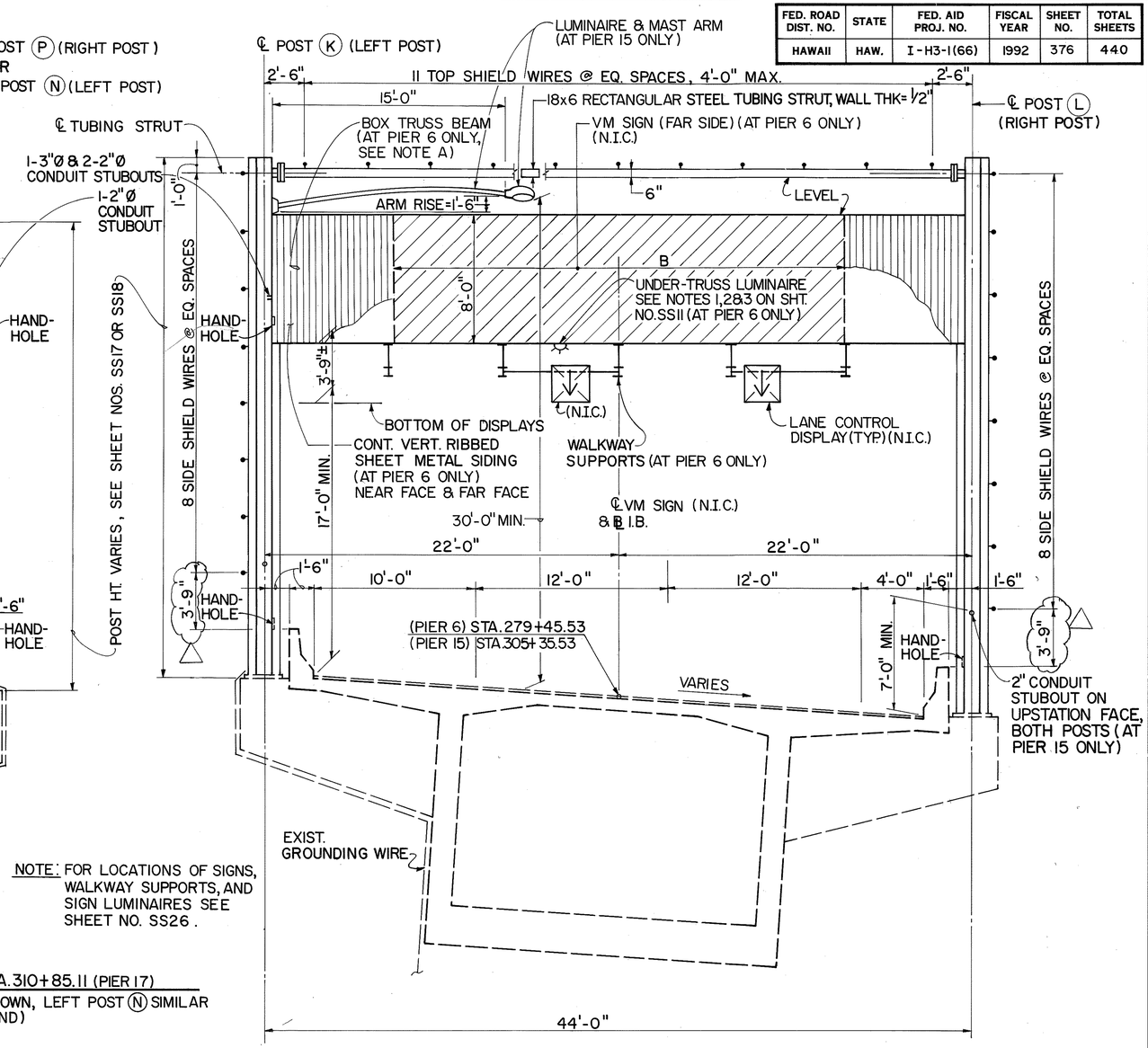

NOTE: FOR LOCATIONS OF SIGNS, WALKWAY SUPPORTS, AND SIGN LUMINAIRES SEE SHEET NO. SS26.

TYPICAL FOR O.B. STA. 310+85.11 (PIER 17)
(RIGHT POST (P) AS SHOWN, LEFT POST (N) SIMILAR EXCEPT OPPOSITE HAND)

SIGN STRUCTURE / FARADAY SHIELD SUPPORT @ O.B. STA. 273+70.11 & SIGN STRUCTURE @ O.B. STA. 310+85.11

SCALE: 1/4" = 1'-0"

SIGN STRUCTURE / FARADAY SHIELD SUPPORT @ I.B. STA. 279+45.53 (PIER 6) & @ I.B. STA. 305+35.53 (PIER 15)

SCALE: 1/4" = 1'-0"

NOTE 'A':

AT PIER 15, PROVIDE TOP & BOTTOM HINGE CONNECTIONS AT POSTS FOR FUTURE INSTALLATION OF BOX TRUSS BEAM SIMILAR TO PIER 6.

4' 0' 4' 8'
1/4" = 1'-0" GRAPHIC SCALE

HUI PANG CHEN
REGISTERED PROFESSIONAL ENGINEER
No. 3865-S
HAWAII, U.S.A.

THIS WORK WAS PREPARED BY ME OR UNDER MY SUPERVISION.
Hui Pang Chen

DATE	REVISION
10/26/93	CHANGED 3'-7" DIMENSION TO 3'-9" PER DCN 66-023

STATE OF HAWAII
DEPARTMENT OF TRANSPORTATION
HIGHWAYS DIVISION

HAIKU APPROACH - SECTION 6
SUPPORT STRUCTURES
INTERSTATE ROUTE H-3
F.A.I. PROJ. NO. I-H3-1(66)

SCALE: AS SHOWN DATE: APR. 1992

SHEET NO. SS14 OF 36 SHEETS

		DATE
SURVEY PLOTTED BY		
DRAWN BY	D. TRIJONG	1/90
TRACED BY	S. CHUN	1/90
DESIGNED BY	S. CHUN	3/90
QUANTITIES BY	S. CHUN	1/90
CHECKED BY	K. WADA	1/90

ORIGINAL PLAN
NOTE BOOK
No.

FED. ROAD DIST. NO.	STATE	FED. AID PROJ. NO.	FISCAL YEAR	SHEET NO.	TOTAL SHEETS
HAWAII	HAW.	I-H3-1(66)	1992	377	440

I.B. FARADAY SHIELD SUPPORT LOCATIONS	POST HEIGHT "B"	
	LEFT POST	RIGHT POST
656 + 52.67	SEE SHEET NO. SS12	
257 + 51.00	32' - 9"	34' - 8"
258 + 66.00		34' - 8"
259 + 70.00		34' - 9"
260 + 70.00		34' - 8"
261 + 70.00		34' - 9"
265 + 34.70		34' - 5"
266 + 26.05		33' - 11"
267 + 19.55	32' - 9"	33' - 3"
268 + 09.70	32' - 11"	32' - 9"
269 + 07.04	33' - 4"	
270 + 04.70	33' - 4"	
271 + 05.50	33' - 4"	
271 + 97.04	33' - 7"	
272 + 84.70	35' - 3"	
273 + 73.70	34' - 6"	
274 + 77.04	35' - 4"	
275 + 74.70		
276 + 65.77		
277 + 57.34		
278 + 54.70		
280 + 37.04		
281 + 34.70		
282 + 25.53		
283 + 17.04		
284 + 14.70		
285 + 05.53		
285 + 97.07		
286 + 94.70	35' - 4"	
288 + 87.11	34' - 4"	
289 + 84.70	33' - 6"	
290 + 75.53	33' - 4"	
291 + 67.15	33' - 4"	
292 + 63.70	33' - 4"	
293 + 63.70	33' - 0"	32' - 9"
294 + 57.19	32' - 9"	33' - 3"
295 + 53.70		34' - 1"
296 + 53.70		34' - 6"
297 + 57.20		34' - 6"
298 + 54.70		34' - 6"
299 + 45.53		34' - 6"
300 + 37.20		34' - 6"
301 + 34.70		34' - 9"
302 + 35.53		35' - 1"
303 + 37.20		35' - 2"
304 + 34.70	32' - 9"	35' - 2"

O.B. FARADAY SHIELD SUPPORT LOCATIONS	POST HEIGHT "B"	
	LEFT POST	RIGHT POST
657 + 42.67	SEE SHEET NO. SS12	
258 + 40.00	32' - 9"	34' - 7"
259 + 40.00	32' - 9"	31' - 6"
260 + 40.00	32' - 9"	31' - 6"
261 + 40.00	SEE SHEET NO. SS10	
264 + 25.61	32' - 7"	31' - 7"
265 + 13.11	32' - 9"	34' - 7"
266 + 07.62		34' - 6"
266 + 97.62		34' - 6"
267 + 91.28		34' - 6"
268 + 87.62		34' - 0"
269 + 83.28	32' - 9"	33' - 2"
270 + 83.58	33' - 3"	32' - 9"
271 + 76.62	34' - 2"	
272 + 69.28	35' - 1"	
274 + 61.54	35' - 8"	
275 + 59.28		
276 + 48.28		
277 + 41.50		
278 + 27.50		
279 + 22.28		
280 + 21.49		
281 + 17.28		
282 + 04.28		
282 + 92.49		
283 + 84.49	35' - 8"	
284 + 78.28	35' - 0"	
285 + 74.49	35' - 8"	
286 + 63.49	35' - 8"	
287 + 59.28	35' - 8"	
288 + 48.54	35' - 4"	
289 + 42.54	34' - 4"	
290 + 34.28	33' - 2"	32' - 9"
291 + 27.62	32' - 9"	33' - 3"
292 + 16.62		33' - 4"
293 + 14.28		33' - 4"
294 + 03.28		33' - 4"
294 + 96.71		33' - 5"
295 + 93.28		34' - 1"
296 + 85.28		34' - 6"
297 + 66.79		34' - 6"
298 + 62.28		34' - 7"
299 + 57.28		34' - 7"
300 + 56.82		34' - 7"
301 + 53.28		34' - 10"
302 + 45.28		35' - 2"
303 + 36.82		35' - 3"
304 + 39.28	32' - 9"	35' - 3"

ORIGINAL PLAN		DATE
	SURVEY PLOTTED BY	3/92
	DRAWN BY	
	TRACED BY	3/92
NOTE BOOK	DESIGNED BY	3/92
	QUANTITIES BY	3/92
No.	CHECKED BY	3/92

HUI PANG CHEN
REGISTERED PROFESSIONAL ENGINEER
No. 3865-S
HAWAII, U.S.A.

THIS WORK WAS PREPARED BY ME OR UNDER MY SUPERVISION.

Huipang Chen

DATE	REVISION

STATE OF HAWAII
DEPARTMENT OF TRANSPORTATION
HIGHWAYS DIVISION

SUPPORT POST SCHEDULE

SUPPORT STRUCTURES
INTERSTATE ROUTE H-3
F.A.I. PROJ. NO. I-H3-1(66)

SCALE: NO SCALE DATE: APR. 1992

SHEET No. SS15 OF 36 SHEETS

137218

FED. ROAD DIST. NO.	STATE	FED. AID PROJ. NO.	FISCAL YEAR	SHEET NO.	TOTAL SHEETS
HAWAII	HAW.	I-H3-1(66)	1992	378	440

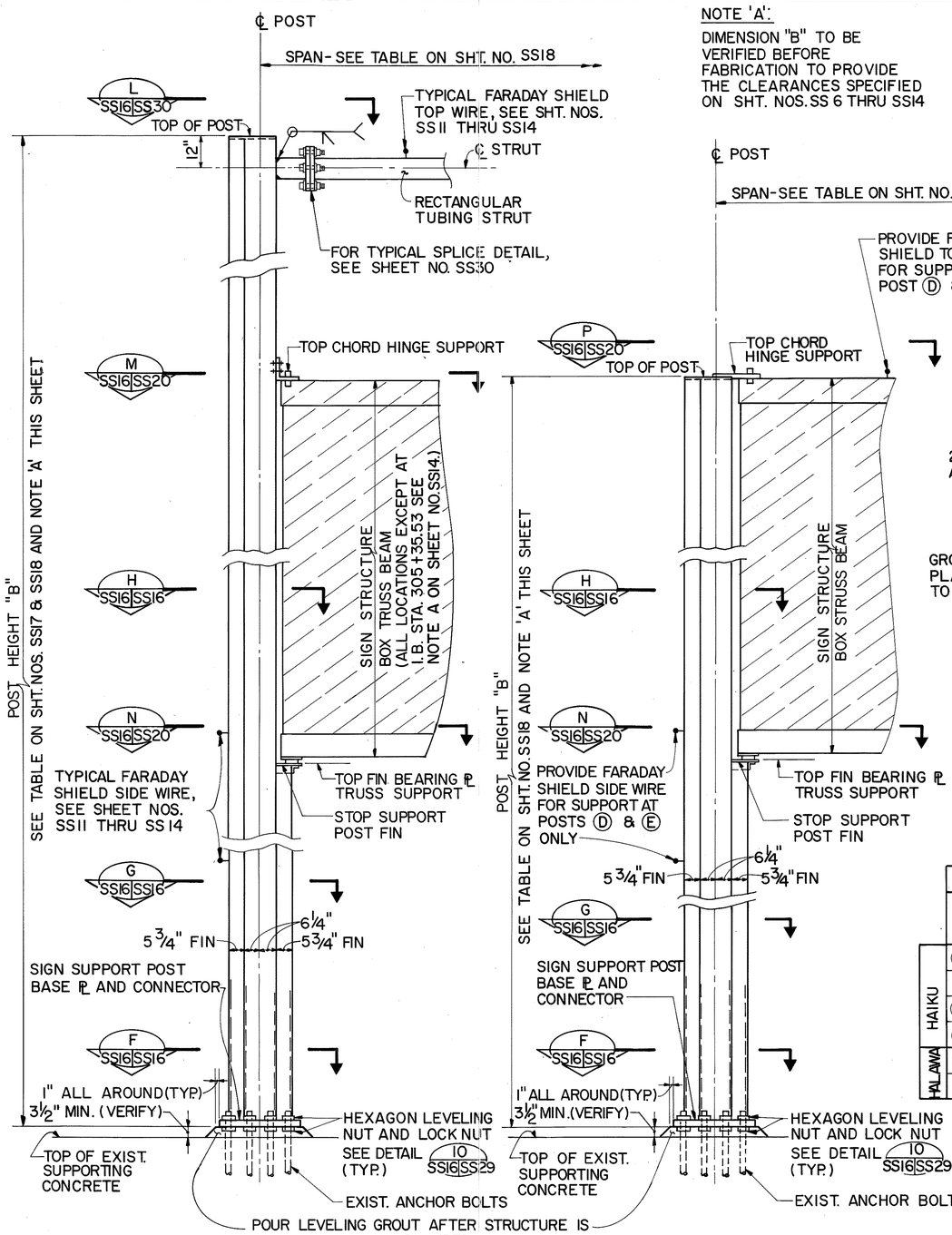

TYPICAL ELEVATION FOR POSTS Ⓐ, Ⓒ, Ⓕ, Ⓗ, Ⓚ, Ⓛ & Ⓜ
SCALE: ½"=1'-0"

TYPICAL ELEVATION FOR POSTS Ⓓ, Ⓔ, Ⓝ & Ⓟ
SCALE: ½"=1'-0"

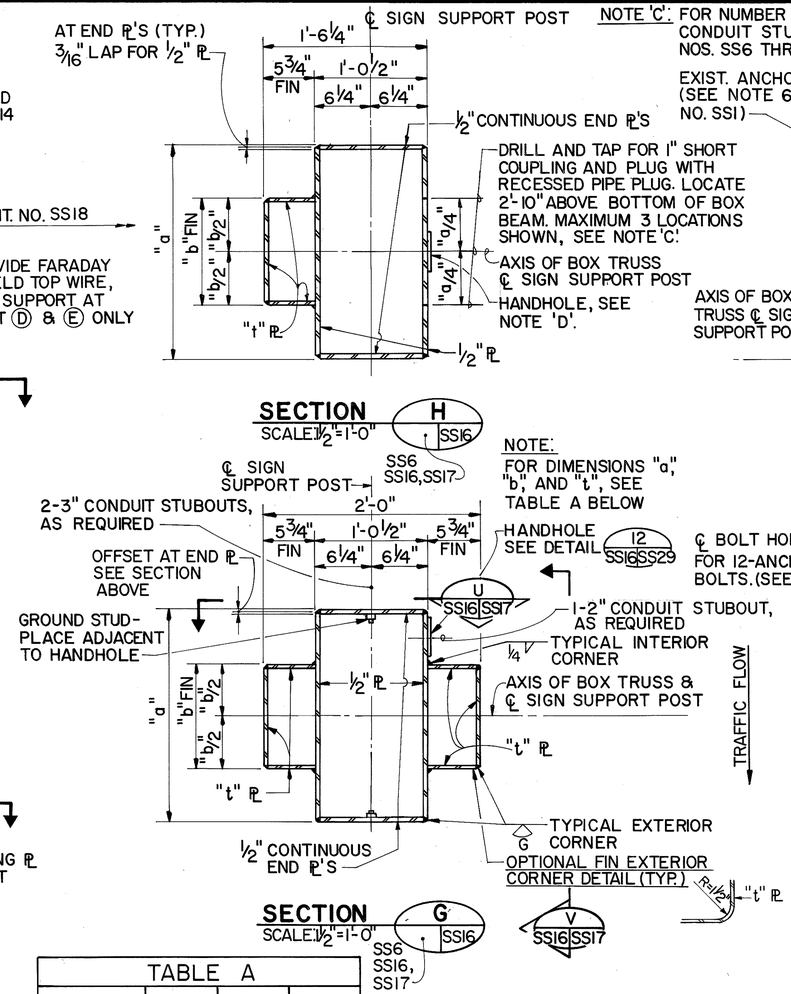

SECTION H
SCALE: 1½"=1'-0"
SS6 SS16, SS17

NOTE:
FOR DIMENSIONS "a", "b", AND "t", SEE TABLE A BELOW

SECTION G
SCALE: 1½"=1'-0"
SS6 SS16, SS17
V SS16 SS17

NOTE 'C': FOR NUMBER & SIZES OF CONDUIT STUBOUTS, SEE SHT. NOS. SS6 THRU SS14.

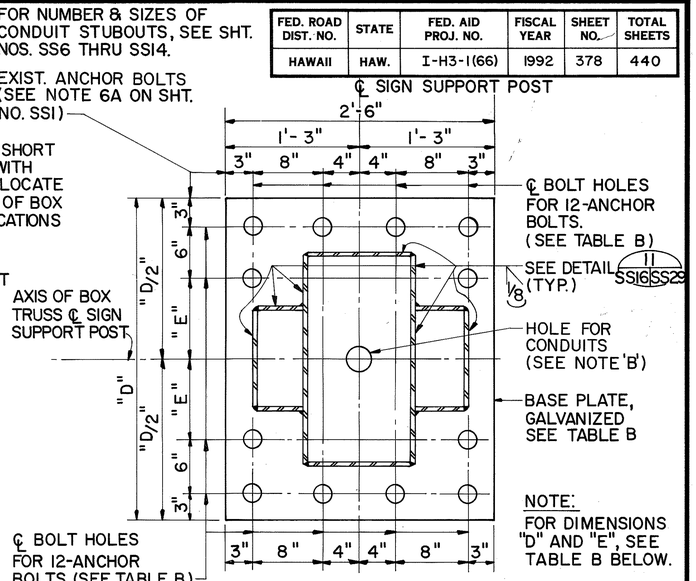

NOTE:
FOR DIMENSIONS "D" AND "E", SEE TABLE B BELOW.

SECTION F
SS6, SS16, SS17 F SS16

BASE PLATE
SCALE: 1½"=1'-0"

TABLE A				
	POST	"a"	"b"	"t"
HAIKU	Ⓐ, Ⓑ & Ⓒ	2'-6"	1'-5¾"	½"
	Ⓓ & Ⓔ	3'-0"	1'-11¾"	½"
	Ⓕ THRU Ⓜ	2'-0"	11¾"	⅜"
	Ⓝ & Ⓟ	2'-0"	11¾"	⅜"
HALAWA	Ⓝ & Ⓟ	2'-0"	11¾"	⅜"
	Ⓠ	3'-0"	1'-11¾"	½"

TABLE B				
	POST	BASE PLATE "D"	BASE PLATE THICKNESS	BASE PLATE "E"	BOLT HOLE SIZE
HAIKU	Ⓐ, Ⓑ & Ⓒ	3'-6"	3"	1'-0"	2 5/8" Ø
	Ⓓ & Ⓔ	4'-0"	3¼"	1'-3"	2 5/8" Ø
	Ⓕ & Ⓖ	3'-0"	2½"	0'-9"	2 5/8" Ø
	Ⓗ THRU Ⓜ	3'-0"	2¾"	0'-9"	2 3/8" Ø
	Ⓝ & Ⓟ	3'-0"	2½"	0' 9"	2 3/8" Ø
HALAWA	Ⓝ & Ⓟ	3'-0"	2½"	0'-9"	2 3/8" Ø
	Ⓠ	4'-0"	3"	1'-3"	2 5/8" Ø

NOTE 'B': THE CONTRACTOR SHALL VERIFY THE NUMBER & SIZES OF CONDUITS IN THE FIELD PRIOR TO FABRICATION.

NOTE 'D': PLACE HANDHOLE IN SUPPORT POSTS WHERE CONDUIT STUBOUTS ARE PROVIDED. LOCATE HANDHOLE SO THAT BOTTOM OF HANDHOLE COVER ℙ IS 1'-2" ABOVE BOTTOM OF BOX BEAM & CENTERED ABOUT ℄ SUPPORT POST.

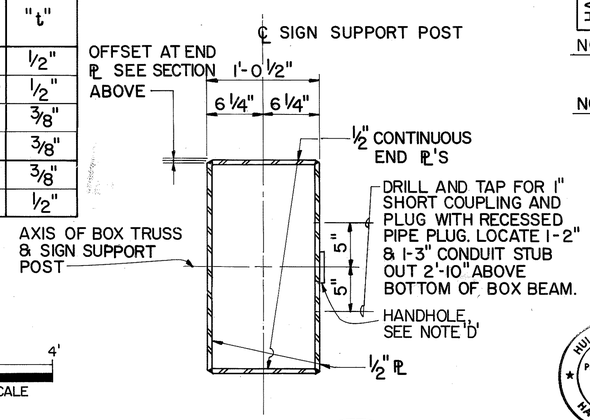

SECTION Q
SCALE: 1½"=1'-0" SS17 SS16

2' 0' 2' 4'
1/2"=1'-0" GRAPHIC SCALE

0' 1' 2'
1 1/2"=1'-0" GRAPHIC SCALE

DATE	REVISION
1/7/94	REV. BOLT HOLE SIZE PER DCN 66-031

STATE OF HAWAII
DEPARTMENT OF TRANSPORTATION
HIGHWAYS DIVISION

SUPPORT POST DETAILS-I

SUPPORT STRUCTURES

INTERSTATE ROUTE H-3
F.A.I. PROJ. NO. I-H3-1(66)

SCALE: AS SHOWN DATE: APR. 1992

SHEET No. SS16 OF 36 SHEETS

HUI PANG CHEN
REGISTERED PROFESSIONAL ENGINEER
No. 3865-S
HAWAII, U.S.A.

THIS WORK WAS PREPARED BY ME OR UNDER MY SUPERVISION.
Hui Pang Chen

ORIGINAL PLAN		DATE
SURVEY PLOTTED BY		
DRAWN BY	R. MALAUHIN	1/90
TRACED BY	E. Wahl	1/90
DESIGNED BY	S. CHIN	2/92
QUANTITIES BY		
CHECKED BY	S. CHIN	1/90
NOTE BOOK		
No.		

FED. ROAD DIST. NO.	STATE	FED. AID PROJ. NO.	FISCAL YEAR	SHEET NO.	TOTAL SHEETS
HAWAII	HAW.	I-H3-1(66)	1992	379	440

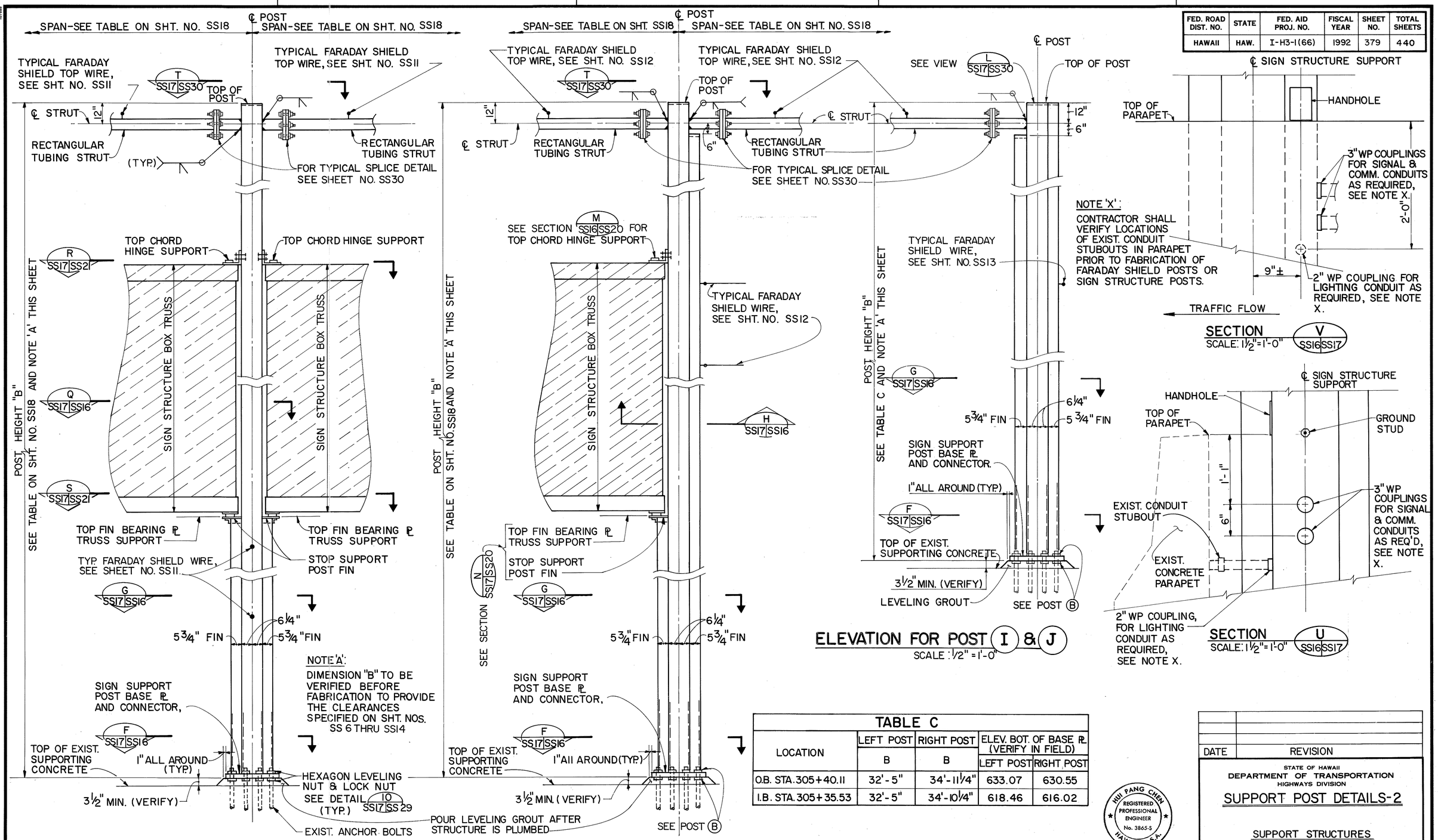

LOCATION	LEFT POST	RIGHT POST	ELEV. BOT. OF BASE PL (VERIFY IN FIELD)	
	B	B	LEFT POST	RIGHT POST
O.B. STA. 305+40.11	32'-5"	34'-11¼"	633.07	630.55
I.B. STA. 305+35.53	32'-5"	34'-10¼"	618.46	616.02

TABLE C

2' 0' 2' 4'
1/2"=1'-0" GRAPHIC SCALE

HUI PANG CHIEN REGISTERED PROFESSIONAL ENGINEER No. 3865-S HAWAII, U.S.A.

THIS WORK WAS PREPARED BY ME OR UNDER MY SUPERVISION.
Hui Pang Chien

DATE	REVISION

STATE OF HAWAII
DEPARTMENT OF TRANSPORTATION
HIGHWAYS DIVISION

SUPPORT POST DETAILS-2

SUPPORT STRUCTURES
INTERSTATE ROUTE H-3
F.A.I. PROJ. NO. I-H3-1(66)

SCALE: AS SHOWN DATE: APR. 1992

SHEET No. SS17 OF 36 SHEETS

ORIGINAL PLAN
SURVEY PLOTTED BY
DRAWN BY R. NAKAMURA DATE TPC
TRACED BY K. MADA 1.92
DESIGNED BY S. CHUNG 3.92
QUANTITIES BY S. CHUNG 1.92
CHECKED BY S. CHUNG
NOTE BOOK
No.

FED. ROAD DIST. NO.	STATE	FED. AID PROJ. NO.	FISCAL YEAR	SHEET NO.	TOTAL SHEETS
HAWAII	HAW.	I-H3-1(66)	1992	380	440

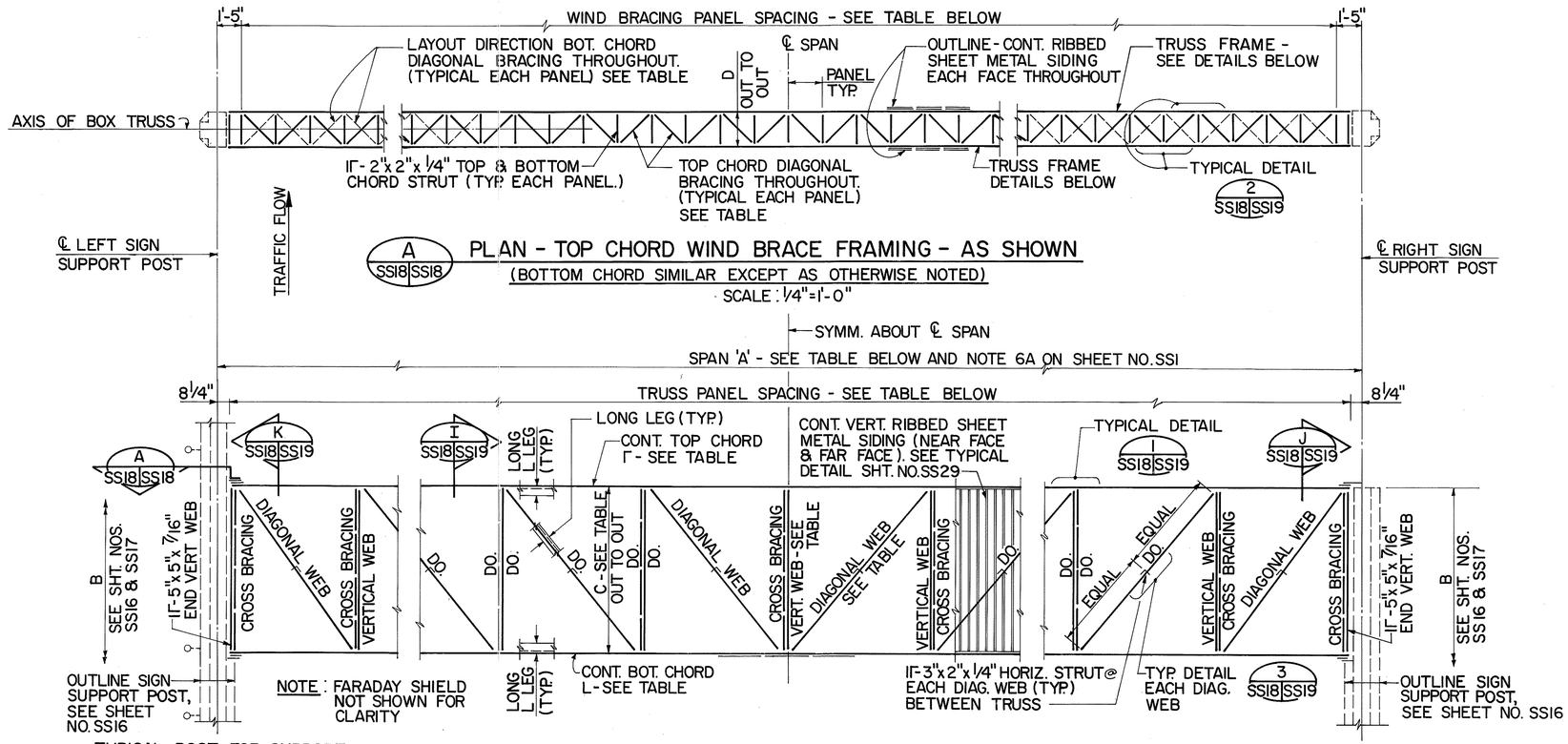

TYPICAL POST FOR SUPPORT OF SIGN STRUCTURE WITH FARADAY SHIELD

ELEVATION - TYP. TRUSS FRAMING DETAIL FOR BOX TRUSS BEAM

SCALE: 1/4"=1'-0"

TYPICAL POST FOR SUPPORT OF SIGN STRUCTURE ALONE & FOR SUPPORT AT I.B. STA. 263+49.5 / O.B. STA. 263+28.5

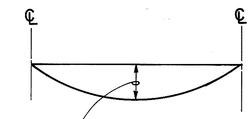

DEAD LOAD DEFLECTION

N.T.S.

NOTE 'A':

THE DEAD LOAD DEFLECTION INCLUDES THE EFFECT OF THE WEIGHT OF THE TRUSS. A CAMBER SHALL BE PROVIDED TO ACCOMODATE THIS DEFLECTION.

✱ NOTE: FOR ADDITIONAL DETAILS FOR MID-SPAN SUPPORT AT O.B. STA. 262+41.99, SEE SHEET NO. SS34.

✱✱ CENTRAL POST B = 35'-1 1/4", SEE LAYOUT ON SHEET NO. SS11

	LOCATION	SPAN A	LEFT POST B	RIGHT POST B	TRUSS DEPTH C	TRUSS WIDTH D	TRUSS PANELS SPACING	TRUSS TOP & BOT. CHORD SIZE	TRUSS VERT. WEB SIZE	TRUSS DIAG. WEB SIZE	WIND BRACING PANEL SPACING	DIAG. BRACING TOP & BOT. CHORDS	ELEV. BOT. OF BASE PL (VERIFY IN FIELD) LEFT POST	ELEV. BOT. OF BASE PL (VERIFY IN FIELD) RIGHT POST	DEAD LOAD DEFLECTION
HAIKU	I.B. STA. 262+58.75	71'-10"±	32'-5"	✱✱	8'-0"	2'-6"	10 EQUAL PANELS @ 7'-0 1/2"±= 70'-5"±	∠5x3 1/2x5/8	∠3 1/2x3 1/2x5/16	∠4x3 1/2x5/16	28 EQUAL PANELS @ 2'-5 9/16"±= 69'-0"±	∠2x2x5/16	816.90	814.21	1/8"
	✱O.B. STA. 262+41.99	103'-2 3/8"±	✱✱	32'-1 1/16"	8'-0"	2'-6"	16 EQUAL PANELS @ 6'-4 3/8"±=101'-10"±	∠6x4x3/4	∠3 1/2x3 1/2x5/16	∠4x3 1/2x5/16	42 EQUAL PANELS @ 2'-4 1/16"±= 100'-4 7/8"±	∠2 1/2x2 1/2x3/8	814.21	817.23	3/8"
	I.B. STA. 263+49.50/ O.B. STA. 263+28.50	163'-3 3/8"±	32'-5"	31'-11 1/2"	5'-0"	3'-0"	38 EQUAL PANELS @ 4'-3 1/8"± =161'-10 3/4"±	∠8x6x1	∠3 1/2x3 1/2x5/16	∠4x3 1/2x5/16	54 EQUAL PANELS @ 2'-11 5/8"±= 160'-3 3/4"±	∠2 1/2x2 1/2x3/8	813.08	813.55	3/4"
	I.B. STA. 264+49.10	60'-5 1/8"±	32'-5"	33'-7 7/8"	8'-0"	2'-0"	8 EQUAL PANELS @ 7'-4 9/16"±= 59'-0 1/2"±	∠5x3 1/2x5/8	∠3 1/2x3 1/2x5/16	∠4x3 1/2x5/16	28 EQUAL PANELS @ 2'-0 11/16"±= 57'-7 1/4"±	∠2x2x1/4	808.85	807.61	1/16"
	O.B. STA. 273+70.11	50'-0"	35'-3 1/2"	32'-5"	10'-0"	2'-0"	6 EQUAL PANELS @ 8'-1 1/4" = 48'-7 1/2"	∠5x3 1/2x5/8	∠3 1/2x3 1/2x5/16	∠4x3 1/2x5/16	24 EQUAL PANELS @ 1'-11 9/16" = 47'-1 1/2"	∠2x2x5/16	766.98	769.86	1/16"
	I.B. STA. 279+45.53	44'-0"	34'-11 9/16"	32'-5"	8'-0"	2'-0"	6 EQUAL PANELS @ 7'-1 1/4" = 42'-7 1/2"	∠5x3 1/2x3/8	∠3 1/2x3 1/2x5/16	∠4x3 1/2x5/16	22 EQUAL PANELS @ 1'-10 7/16" = 41'-1 5/8"	∠2x2x1/4	743.36	745.91	1/16"
	I.B. STA. 287+85.53	44'-0"	34'-10 3/4"	32'-5"	6'-0"	2'-0"	8 EQUAL PANELS @ 5'-3 15/16"= 42'-7 1/2"	∠5x3 1/2x3/8	∠3 1/2x3 1/2x5/16	∠4x3 1/2x5/16	22 EQUAL PANELS @ 1'-10 7/16" = 41'-1 5/8"	∠2x2x1/4	706.61	709.09	1/16"
	O.B. STA. 310+85.11	44'-0"	27'-0"	29'-6 1/4"	10'-0"	2'-0"	6 EQUAL PANELS @ 7'-1 1/4" = 42'-7 1/2"	∠5x3 1/2x3/8	∠3 1/2x3 1/2x5/16	∠4x3 1/2x5/16	22 EQUAL PANELS @ 1' 10 7/16" = 41'-1 5/8"	∠2x2x1/4	603.27	600.75	1/16"
HALAWA	O.B. STA. 573+40	44'-0"	26'-5"	27'-2 1/8"	6'-0"	2'-0"	8 EQUAL PANELS @ 5'-3 15/16"= 42'-7 1/2"	∠5x3 1/2x3/8	∠3 1/2x3 1/2x5/16	∠4x3 1/2x5/16	22 EQUAL PANELS @ 1'-10 7/16" = 41'-1 5/8"	∠2x2x1/4	854.88	854.12	1/16"
	O.B. STA. 577+80	44'-0"	28'-5"	29'-2 1/8"	8'-0"	2'-0"	6 EQUAL PANELS @ 7'-1 1/4" = 42'-7 1/2"	∠5x3 1/2x3/8	∠3 1/2x3 1/2x5/16	∠4x3 1/2x5/16	22 EQUAL PANELS @ 1'-10 7/16" = 41'-1 5/8"	∠2x2x1/4	888.48	887.72	1/16"
	O.B. STA. 594+50	56'-4"	28'-5"	29'-2"	8'-0"	2'-0"	8 EQUAL PANELS @ 6'-10 7/16" = 54'-11 1/2"	∠5x3 1/2x5/8	∠3 1/2x3 1/2x5/16	∠4x3 1/2x5/16	26 EQUAL PANELS @ 2'-0 5/8" = 53'-4 1/4"	∠2x2x1/4	1001.29	1000.21	1/16"

DATE	REVISION
2/24/94	CLARIFY DIMENSIONS PER DCN 66-036

ORIGINAL PLAN — NOTE BOOK — No.

SURVEY PLOTTED BY — DRAWN BY D. TRUONG 1/90
TRACED BY — 1/90
DESIGNED BY S. CHUN 3/90
QUANTITIES BY S. CHUN 1/90
CHECKED BY K. WADA

HUI PANG CHEN REGISTERED PROFESSIONAL ENGINEER No. 3865-S HAWAII, U.S.A.

THIS WORK WAS PREPARED BY ME OR UNDER MY SUPERVISION.

Hui Pang Chen

4' 0 4' 8
1/4"=1'-0" GRAPHIC SCALE

STATE OF HAWAII
DEPARTMENT OF TRANSPORTATION
HIGHWAYS DIVISION

TRUSS FRAMING DETAILS

SUPPORT STRUCTURES
INTERSTATE ROUTE H-3
F.A.I. PROJ. NO. I-H3-1(66)

SCALE: AS SHOWN — DATE: APR. 1992

SHEET No. SS18 OF 36 SHEETS

FED. ROAD DIST. NO.	STATE	FED. AID PROJ. NO.	FISCAL YEAR	SHEET NO.	TOTAL SHEETS
HAWAII	HAW.	I-H3-1(66)	1992	381	440

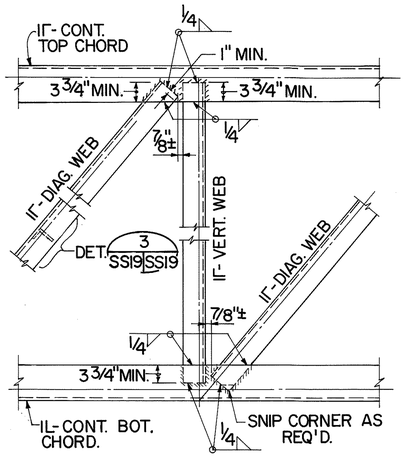

TYPICAL DETAIL 1
SCALE: 1" = 1'-0" SS6, SS18 SS19

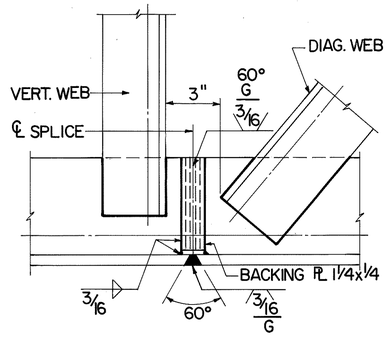

INTERIOR ELEVATION
TYPICAL TOP OR BOTTOM
TRUSS CHORD SHOP SPLICE DETAILS
SCALE: 3" = 1'-0"

NOTE: SHOP OR FIELD SPLICE LOCATIONS OF TOP & BOTTOM CHORDS AT EACH TRUSS SHALL BE STAGGERED & AT ALTERNATE LOCATIONS.
INDICATE SPLICE LOCATIONS ON SHOP FABRICATION DRAWINGS FOR APPROVAL.
IN NO CASE SHALL SPLICES BE LOCATED AT MIDSPAN OF TRUSS.
THE SPLICE SHALL BE LOCATED SO AS NOT TO INTERFERE WITH THE MOUNTING OF THE WALKWAY BRACKETS.

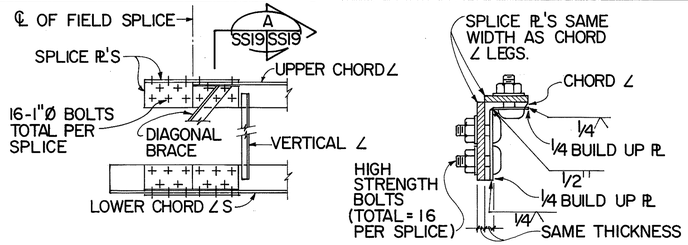

FIELD SPLICE DETAIL
N.T.S.

SECTION A SS19 SS19
N.T.S.

BUILD UP PLATE:
THE PLATES WELDED TO THE ANGLE LEGS ON THE INSIDE SHALL BE WELDED BEFORE PUNCHING THE BOLT HOLES. THEY SHALL BE THE SAME LENGTH AS THE SPLICE PLATES.

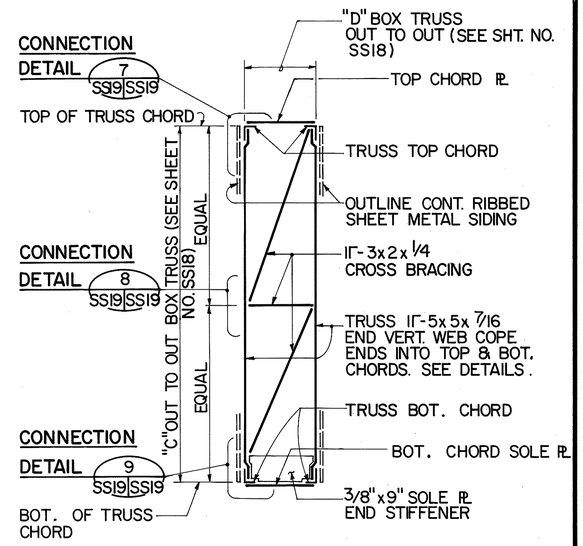

TYP. BOX TRUSS END SECTION J AS SHOWN
SS6, SS18 SS19

SECTION K SS18 SS19 SIMILAR EXCEPT OPPOSITE HAND
(END CROSS BRACING DETAILS)
SCALE: 1/2" = 1'-0"

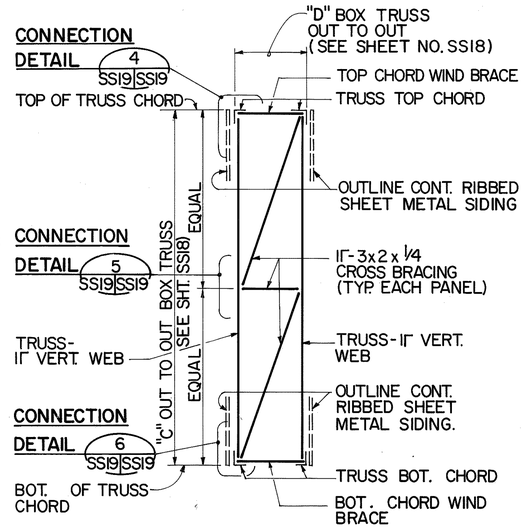

TYP. BOX TRUSS SECTION I
(INTERMEDIATE CROSS BRACING DETAILS) SS6 SS19 SS18
SCALE: 1/2" = 1'-0"

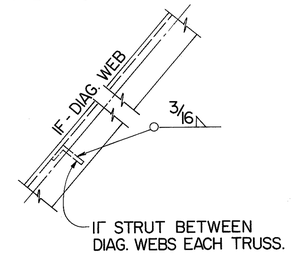

DETAIL 3
N.T.S.
SS6, SS18, SS19

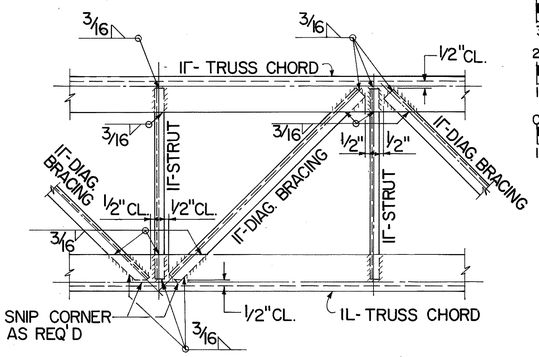

TYPICAL DETAIL 2
SS6, SS18 SS19

WIND BRACE CONNECTION
(TOP CHORD SHOWN - BOT. CHORD SIMILAR)
SCALE: 1 1/2" = 1'-0"

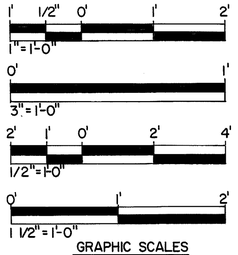

GRAPHIC SCALES

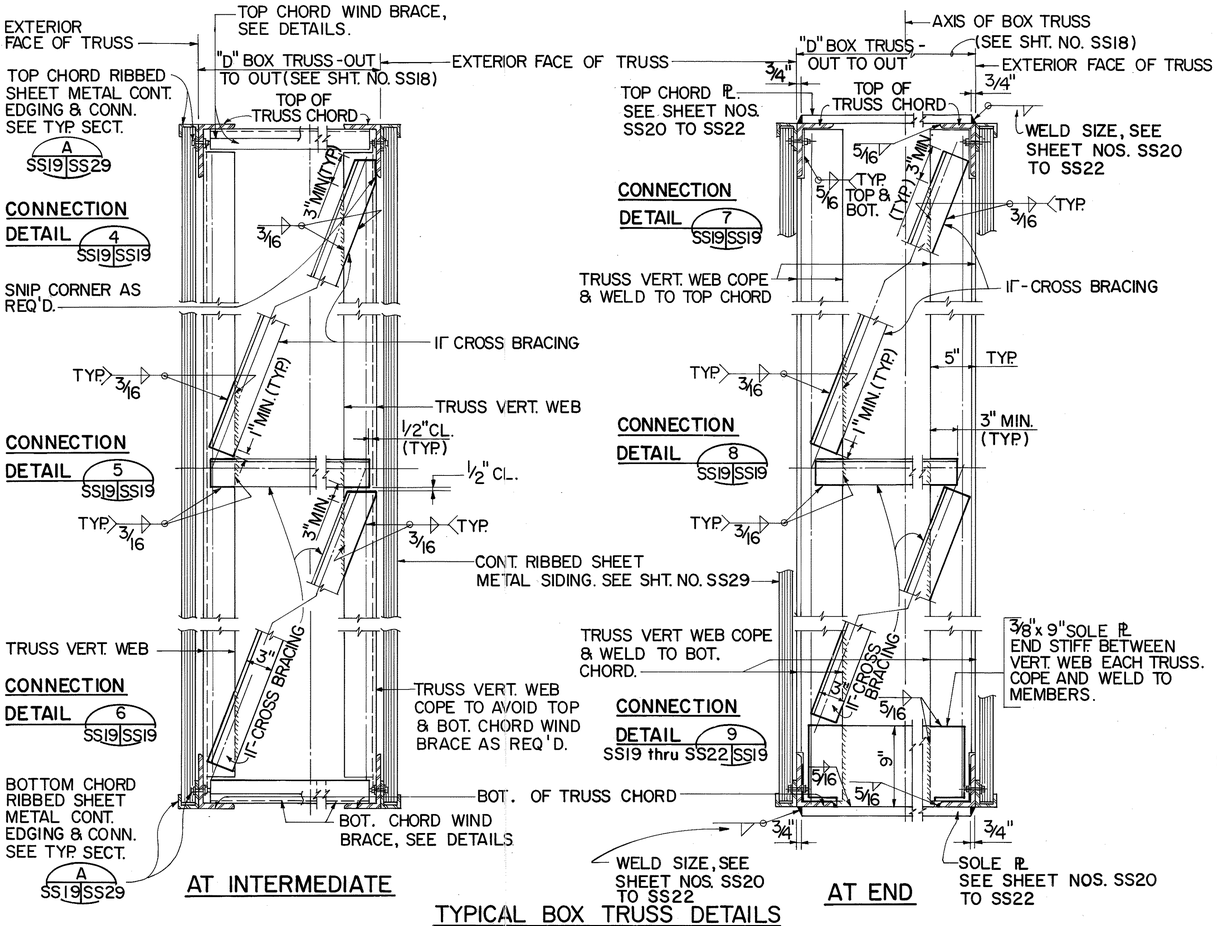

TYPICAL BOX TRUSS DETAILS
SCALE: 1 1/2" = 1'-0"

SURVEY PLOTTED BY	
DRAWN BY	D. TRUONG
TRACED BY	
DESIGNED BY	H.P. CHEN
QUANTITIES BY	S. CHIN
CHECKED BY	K. WADA
DATE	1/90 1/90 3/92 1/90
ORIGINAL PLAN	
NOTE BOOK	
No.	

DATE	REVISION

STATE OF HAWAII
DEPARTMENT OF TRANSPORTATION
HIGHWAYS DIVISION

TRUSS CONNECTION DETAILS - I

SUPPORT STRUCTURES
INTERSTATE ROUTE H-3
F.A.I. PROJ. NO. I-H3-1(66)

SCALE: AS SHOWN DATE: APR. 1992

SHEET No. SS19 OF 36 SHEETS

RUI PANG CHEN
REGISTERED PROFESSIONAL ENGINEER
No. 3865-S
HAWAII, U.S.A.

THIS WORK WAS PREPARED BY ME OR UNDER MY SUPERVISION.
Ruipang Chen

FED. ROAD DIST. NO.	STATE	FED. AID PROJ. NO.	FISCAL YEAR	SHEET NO.	TOTAL SHEETS
HAWAII	HAW.	I-H3-1(66)	1992	382	440

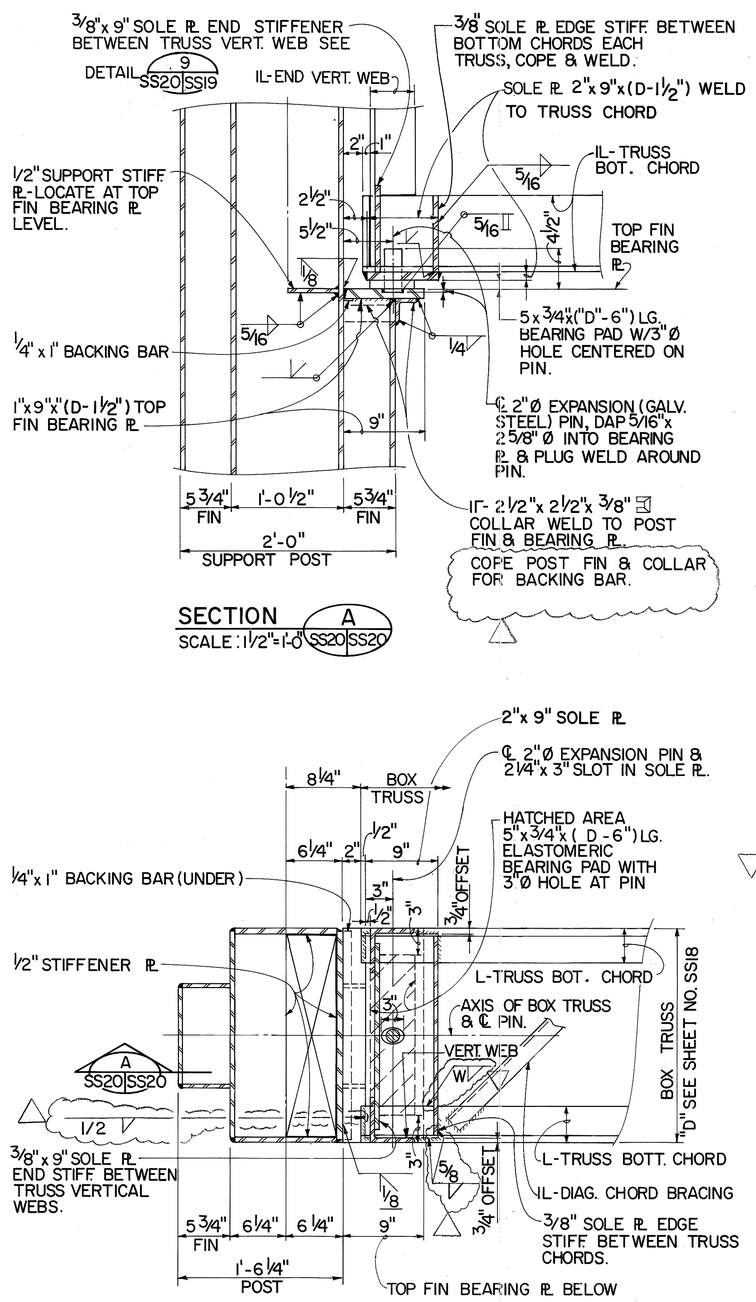

SECTION A
SCALE: 1 1/2"=1'-0" SS20 SS20

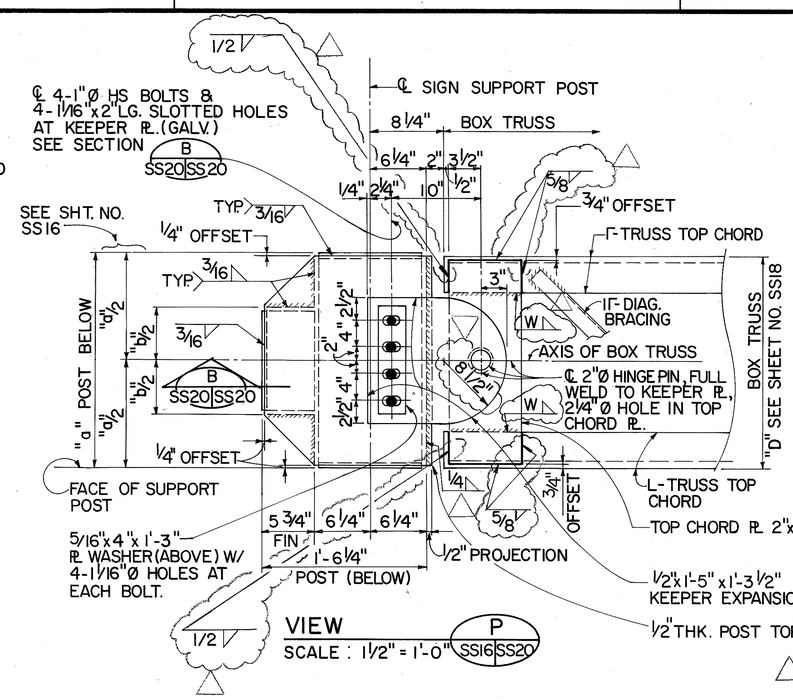

VIEW P
SCALE: 1 1/2" = 1'-0" SS16 SS20

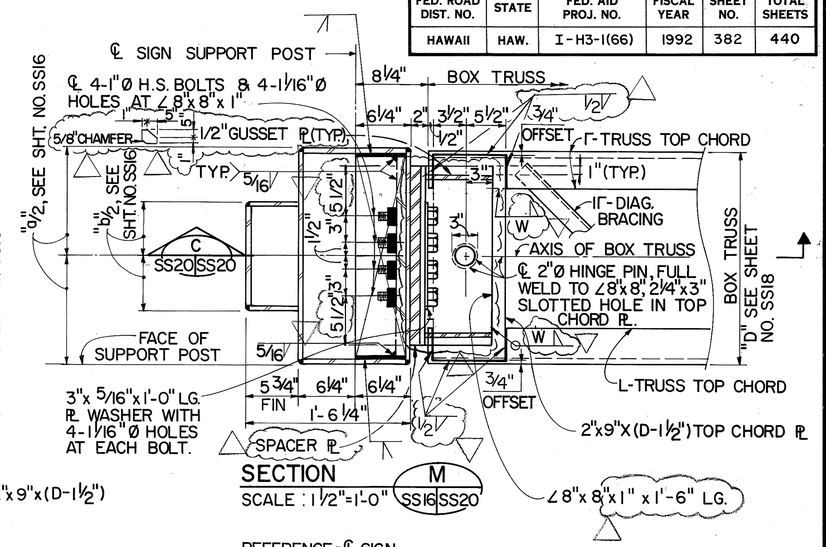

SECTION M
SCALE: 1 1/2"=1'-0" SS16 SS20

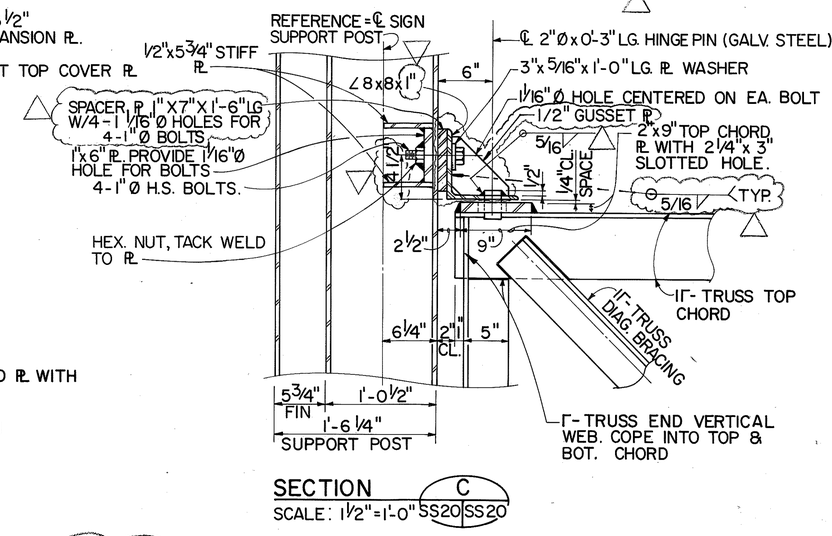

SECTION C
SCALE: 1 1/2"=1'-0" SS20 SS20

SECTION N
SCALE: 1 1/2"=1'-0" SS16 SS20 SS17

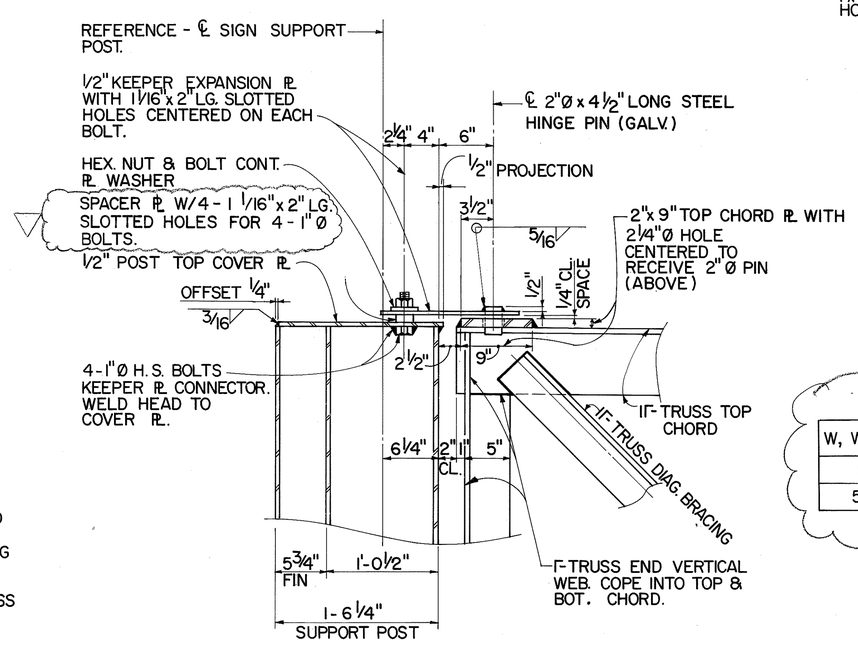

SECTION B
SCALE: 1 1/2"=1'-0" SS20 SS20

W, WELD SIZE	CHORD ANGLE THICKNESS
5/8	> 5/8
5/16	≤ 5/8

1' 0' 1' 2'
1 1/2"=1'-0" GRAPHIC SCALE

HUI PANG CHEN REGISTERED PROFESSIONAL ENGINEER No. 3865-S HAWAII, U.S.A.
THIS WORK WAS PREPARED BY ME OR UNDER MY SUPERVISION.

DATE	REVISION
5/3/94	REVISE NOTE (SECT. 'A', 'B' & 'C')
	REVISE WELDS (SECT. 'N', 'P' & 'M')
	REVISE ANGLE. ADD GUSSET PLATE
	(SECT. 'C' & 'M') PER DCN 66-036
12/29/93	REV. DIM. OF TOP CHORD PLATE (SECT. 'M')
	DCN 66-027

STATE OF HAWAII
DEPARTMENT OF TRANSPORTATION
HIGHWAYS DIVISION

TRUSS CONNECTION DETAILS-2

SUPPORT STRUCTURES
INTERSTATE ROUTE H-3
F.A.I. PROJ. NO. I-H3-1(66)

SCALE: AS SHOWN DATE: APR. 1992

SHEET NO. SS20 OF 36 SHEETS

ORIGINAL PLAN	SURVEY PLOTTED BY	DRAWN BY D. TRUONG	DATE 7/90
	TRACED BY	K. WARD	7/90
NOTE BOOK	DESIGNED BY		2/92
	QUANTITIES BY	S. CHUN	7/90
No.	CHECKED BY	S. CHUN	

FED. ROAD DIST. NO.	STATE	FED. AID PROJ. NO.	FISCAL YEAR	SHEET NO.	TOTAL SHEETS
HAWAII	HAW.	I-H3-1(66)	1992	383	440

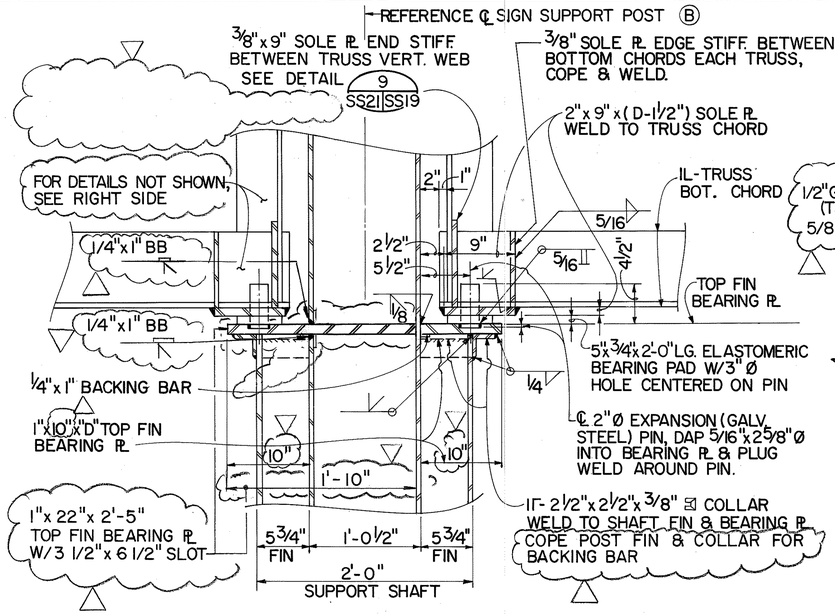

SECTION A
SCALE: 1 1/2"=1'-0" SS21 SS21

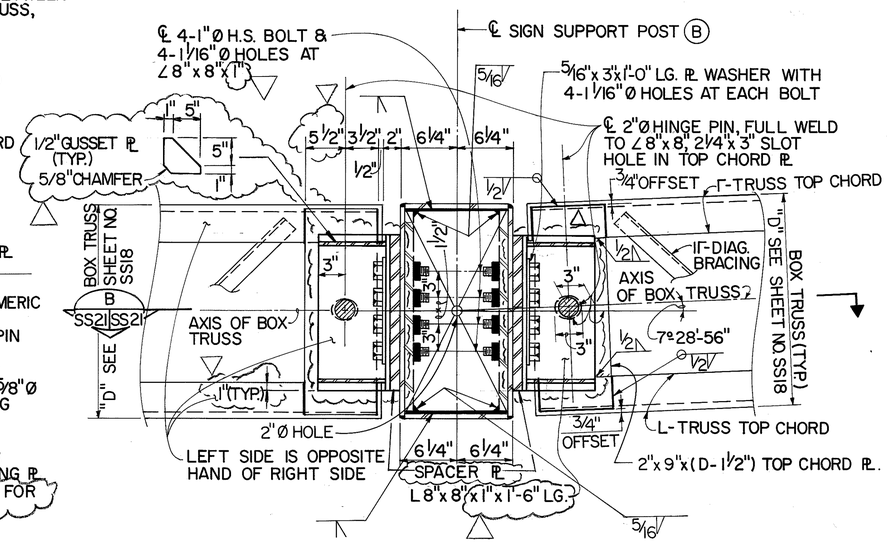

SECTION R
SCALE: 1 1/2"=1'-0" SS17 SS21

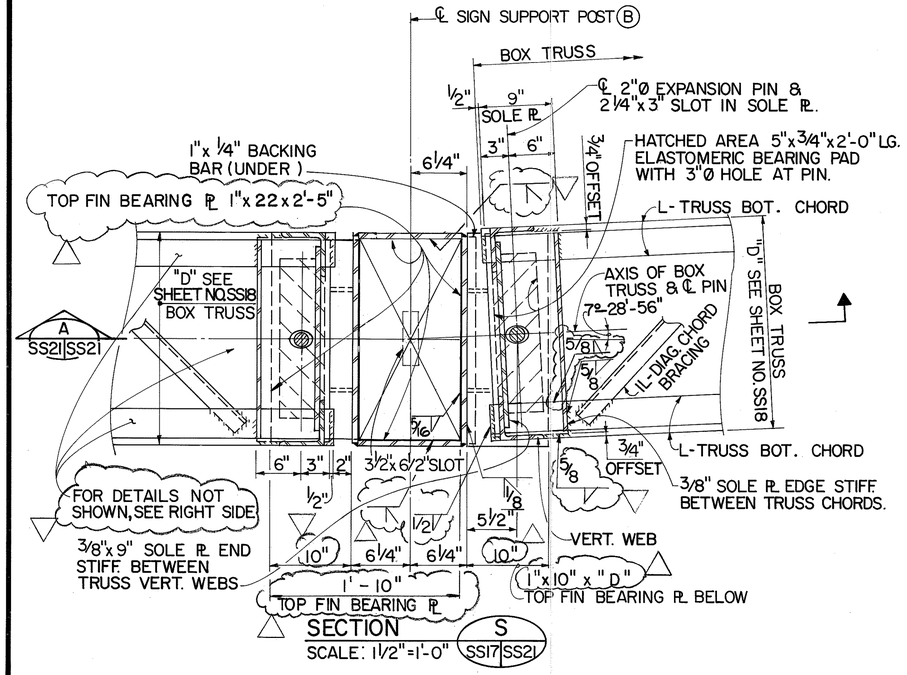

SECTION S
SCALE: 1 1/2"=1'-0" SS17 SS21

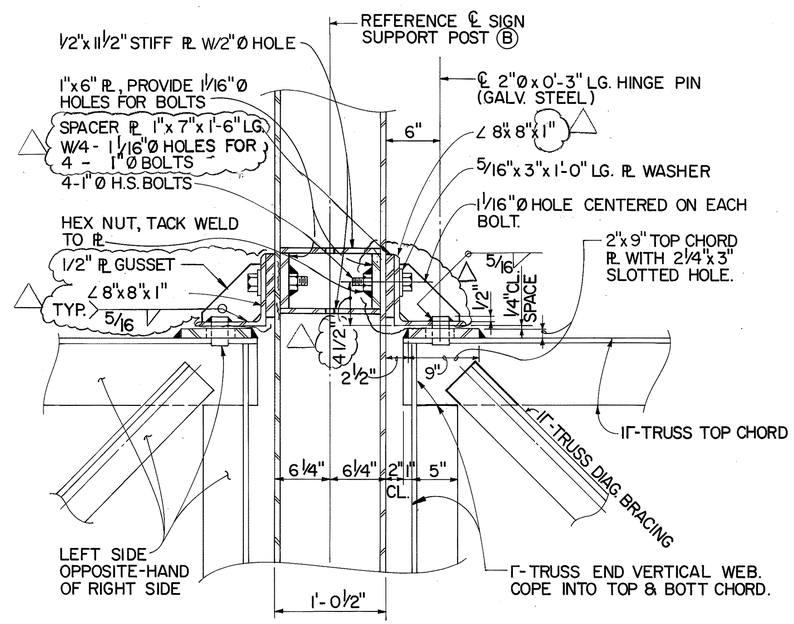

SECTION B
SCALE: 1 1/2"=1'-0" SS21 SS21

1' 0' 1' 2'
1 1/2"-1' 0" GRAPHIC SCALE

HUI PANG CHEN REGISTERED PROFESSIONAL ENGINEER No. 3865-S HAWAII, U.S.A.

THIS WORK WAS PREPARED BY ME OR UNDER MY SUPERVISION.

Hui Pang Chen

DATE	REVISION
3/11/94	REVISE WELDS. DELETE STIFFENER PL
	REVISE BEARING PL
	REVISE ANGLE-ADD GUSSET PL's PER
	DCN 66-036

STATE OF HAWAII
DEPARTMENT OF TRANSPORTATION
HIGHWAYS DIVISION

TRUSS CONNECTION DETAILS-3

SUPPORT STRUCTURES
INTERSTATE ROUTE H-3
F.A.I. PROJ. NO. I-H3-1(66)

SCALE: AS SHOWN DATE: APR. 1992

SHEET NO. SS21 OF 36 SHEETS

ORIGINAL PLAN		
SURVEY PLOTTED BY		DATE: 7/90
DRAWN BY	D. TAKANTA	
TRACED BY	K. WALDA	7/90
DESIGNED BY	S. CHUNG	7/90
QUANTITIES BY	D. TAKANTA	7/90
CHECKED BY	S. CHUNG	7/90
NOTE BOOK		
No.		

FED. ROAD DIST. NO.	STATE	FED. AID PROJ. NO.	FISCAL YEAR	SHEET NO.	TOTAL SHEETS
HAWAII	HAW.	I-H3-1(66)	1992	384	440

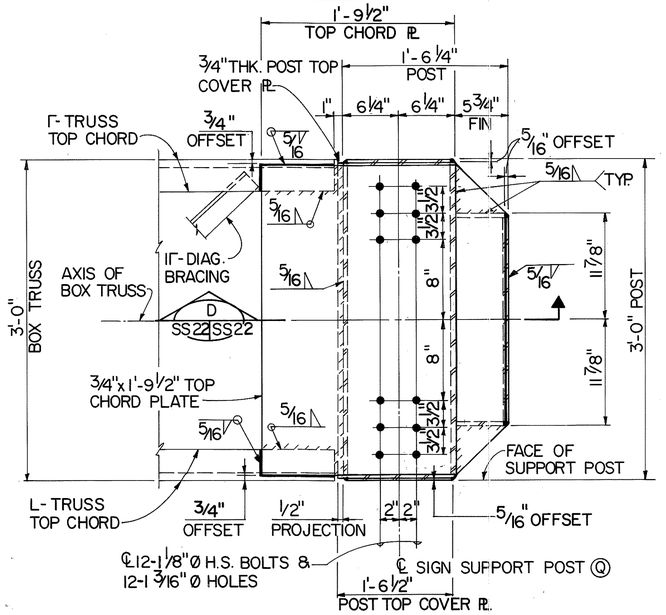

SECTION B
SCALE: 1 1/2"=1'-0" SS6 SS22

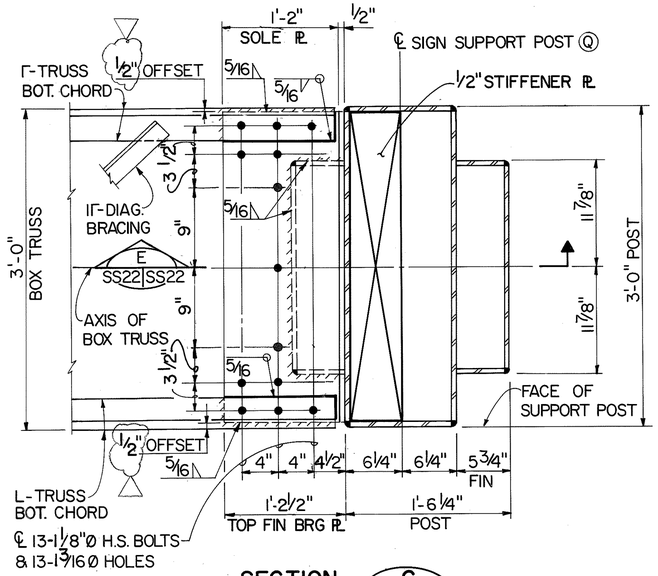

SECTION C
SCALE: 1 1/2"=1'-0" SS6 SS22

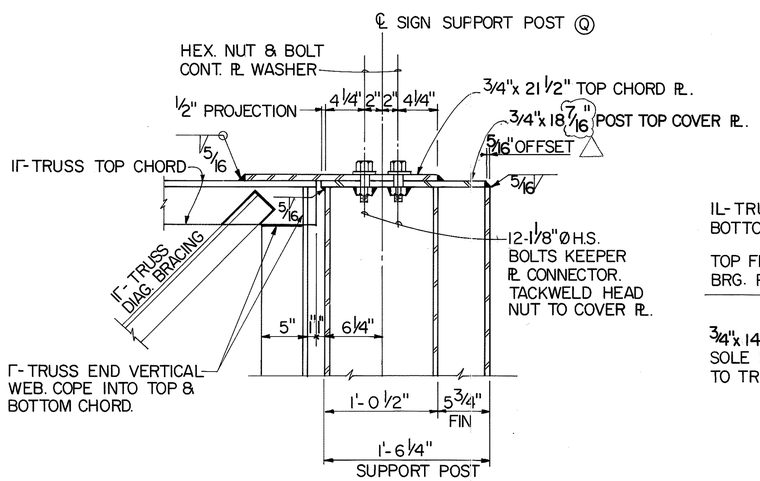

SECTION D
SCALE: 1 1/2"=1'-0" SS22 SS22

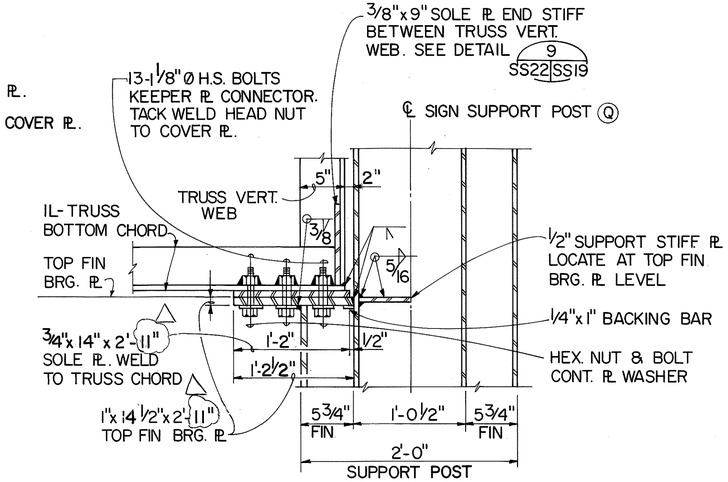

SECTION E
SCALE: 1 1/2"=1'-0" SS22 SS22

DATE	REVISION
2/25/94	REVISE DIMENSION PER DCN 66-036
12/29/93	REV. TRUSS CONNECTION PER DCN 66-027

STATE OF HAWAII
DEPARTMENT OF TRANSPORTATION
HIGHWAYS DIVISION

TRUSS CONNECTION DETAILS-4

SUPPORT STRUCTURES
INTERSTATE ROUTE H-3
F.A.I. PROJ. NO. I-H3-1(66)

SCALE: AS SHOWN DATE: APR. 1992

HUI PANG CHEN
REGISTERED PROFESSIONAL ENGINEER
No. 3865-S
HAWAII, U.S.A.

THIS WORK WAS PREPARED BY ME OR UNDER MY SUPERVISION.
Hui Pang Chen

1' 0' 1' 2'
1 1/2" = 1'-0" GRAPHIC SCALE

		DATE
SURVEY PLOTTED BY		
DRAWN BY	D. TRUONG	1/90
TRACED BY	S. CHUN	1/90
DESIGNED BY	S. CHUN	3/92
QUANTITIES BY	K. VIVAS	1/90
CHECKED BY		

ORIGINAL PLAN
NOTE BOOK
No.

SHEET NO. SS22 OF 36 SHEETS

FED. ROAD DIST. NO.	STATE	FED. AID PROJ. NO.	FISCAL YEAR	SHEET NO.	TOTAL SHEETS
HAWAII	HAW.	I-H3-1(66)	1992	385	440

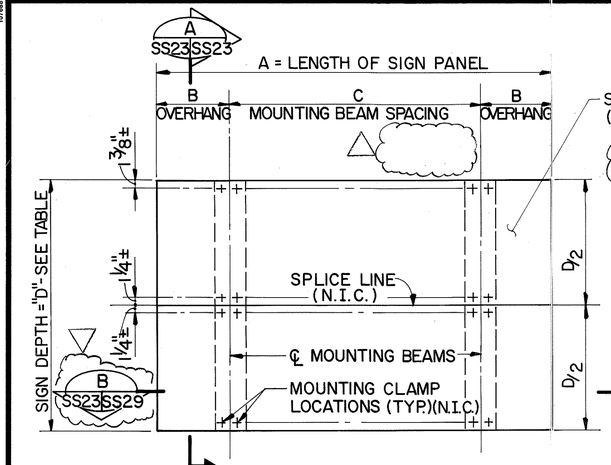

SIGN PANEL LENGTH UP TO 14'-0"

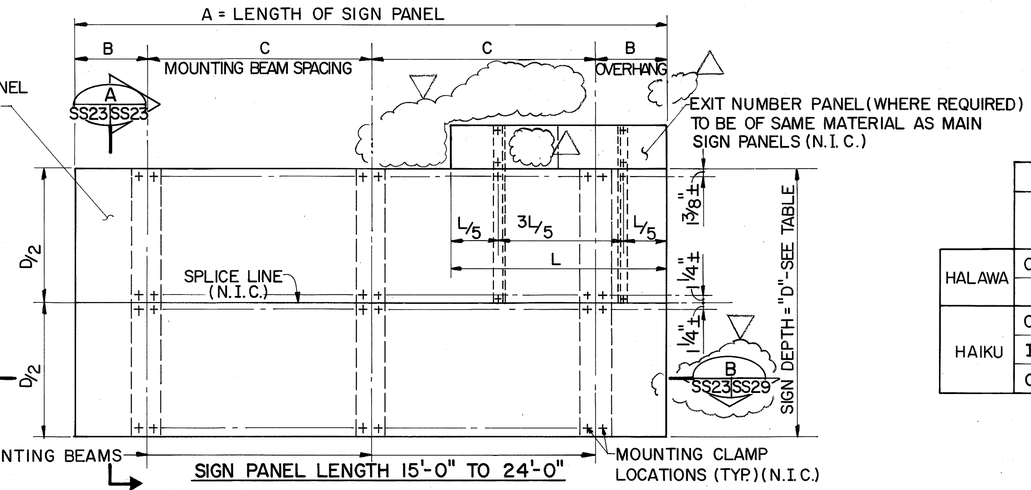

SIGN PANEL LENGTH 15'-0" TO 24'-0"

TYPICAL FIXED MESSAGE SIGN (FMS) PANEL ELEVATIONS

N.T.S.

MOUNTING BEAM SCHEDULE						
	LOCATION	SIGN PANEL LENGTH A	NUMBER MOUNTING BEAMS	SIGN PANEL OVERHANG B	MOUNTING BEAM SPACING C	SIGN DEPTH D
HALAWA	O.B. STA. 573+40	10'-0"	2	2'-0"	6'-0"	6'-0"
HAIKU	O.B. STA. 273+70.11	17'-0"	3	2'-0"	6'-6"	10'-0"
	I.B. STA. 287+85.53	10'-0"	2	2'-0"	6'-0"	6'-0"
	O.B. STA. 310+85.11	17'-0"	3	2'-0"	6'-6"	10'-0"

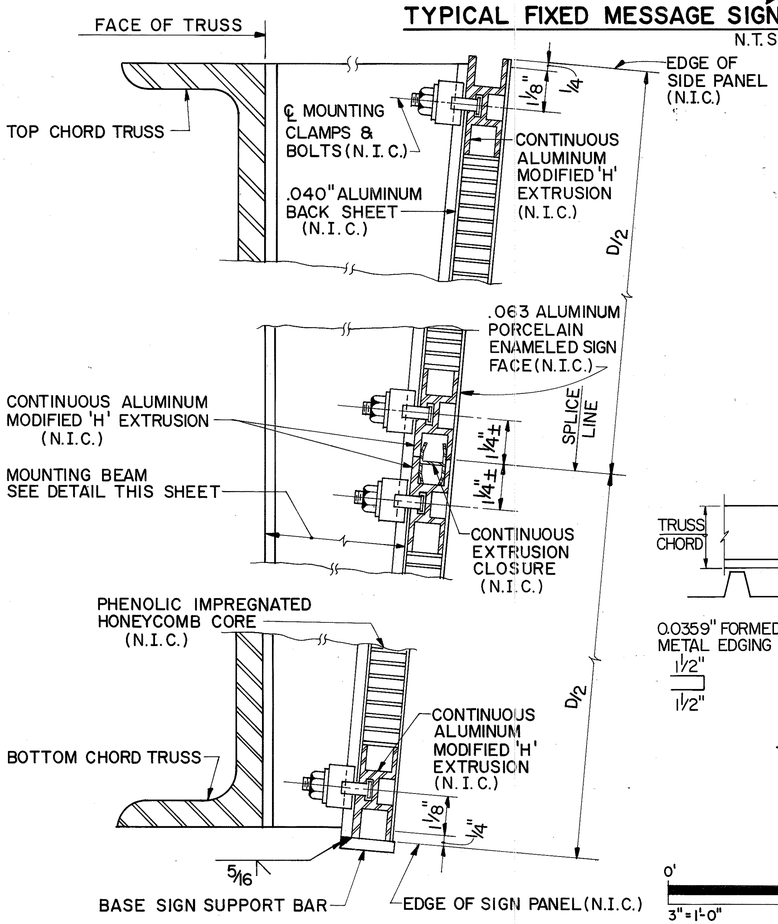

SECTION A (SS23 SS23)
SCALE: 6"=1'-0"

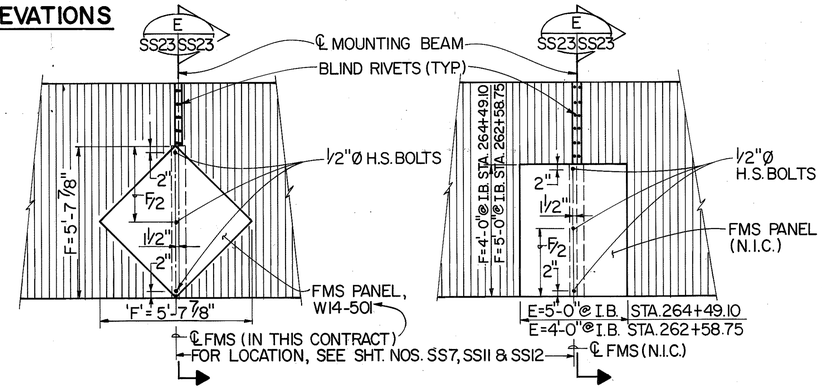

AT O.B. STA. 594+50

AT I.B. STA. 262+58.75 & 264+49.10

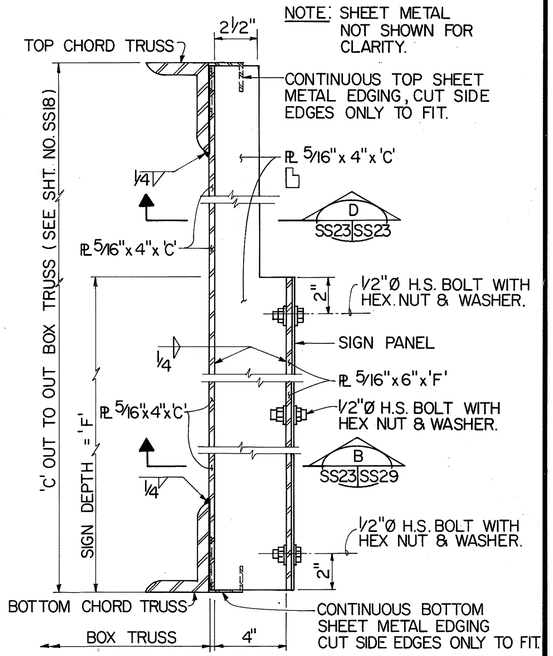

SECTION E (SS23 SS23)
SCALE: 3"=1'-0"

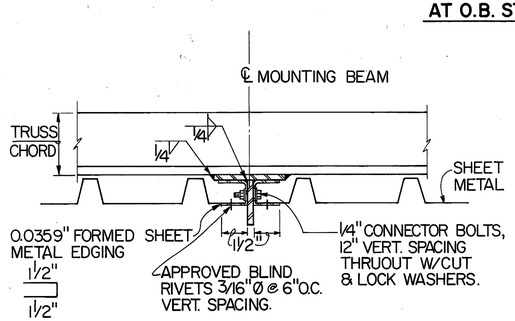

SECTION D (SS23 SS23)
SCALE: 3"=1'-0"

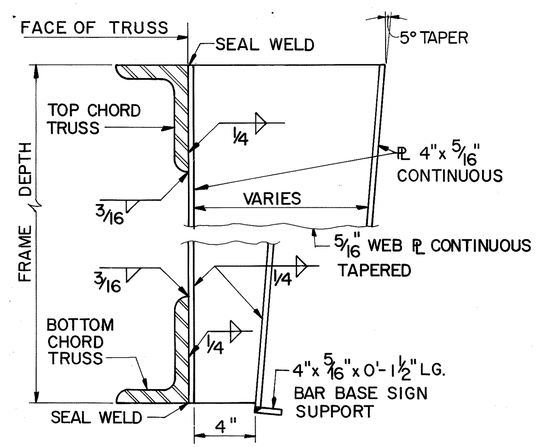

TYPICAL BUILT-UP GALVANIZED STEEL MOUNTING BEAM
SCALE: 3"=1'-0"

0' 1' 2'
3"=1'-0" GRAPHIC SCALE

0' 1'
6"=1'-0" GRAPHIC SCALE

ORIGINAL PLAN	SURVEY PLOTTED BY	DATE
	DRAWN BY R. MAPELESIN	1/90
NOTE BOOK	TRACED BY	
	DESIGNED BY J.P. CHEN	1/90
	QUANTITIES BY S. CHUNG	3/90
No.	CHECKED BY R. WONG	1/90

DATE	REVISION
2/24/94	REVISE SECTION DESIGNATION PER DCN 66-036

STATE OF HAWAII
DEPARTMENT OF TRANSPORTATION
HIGHWAYS DIVISION

FM SIGN CONNECTION DETAILS

SUPPORT STRUCTURES
INTERSTATE ROUTE H-3
F.A.I. PROJ. NO. I-H3-1(66)

SCALE: AS SHOWN DATE: APR. 1992

SHEET No. SS23 OF 36 SHEETS

HUI PANG CHEN
REGISTERED PROFESSIONAL ENGINEER
No. 3865-S
HAWAII, U.S.A.

THIS WORK WAS PREPARED BY ME OR UNDER MY SUPERVISION.
Hui Pang Chen

FED. ROAD DIST. NO.	STATE	FED. AID PROJ. NO.	FISCAL YEAR	SHEET NO.	TOTAL SHEETS
HAWAII	HAW.	I-H3-1(66)	1992	386	440

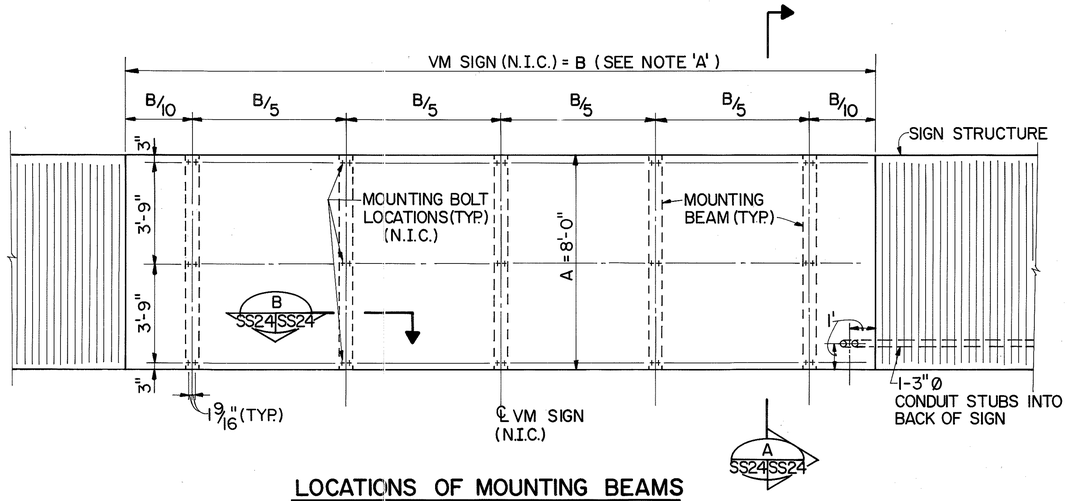

NOTE 'A': USE B = 30'-3" FOR BIDDING PURPOSE. THE CONTRACTOR SHALL VERIFY THIS DIMENSION ('B') FROM THE ENGINEER PRIOR TO FABRICATING THE SIGN SUPPORT STRUCTURES.

LOCATIONS OF MOUNTING BEAMS
TYPICAL VARIABLE MESSAGE SIGN (VMS) ELEVATION

SCALE: 3/8" = 1'-0"

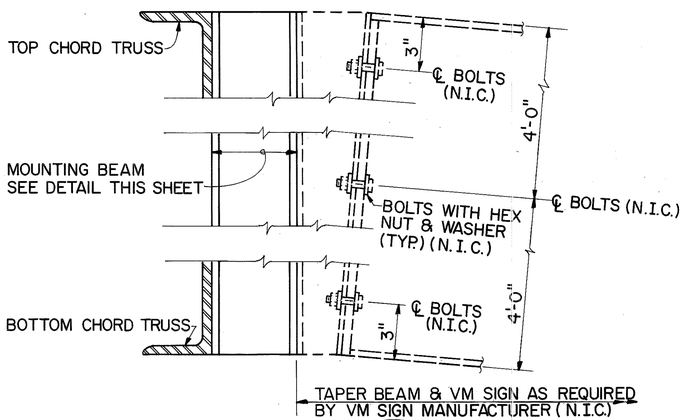

SECTION A SS24 SS24

SCALE: 3" = 1'-0"

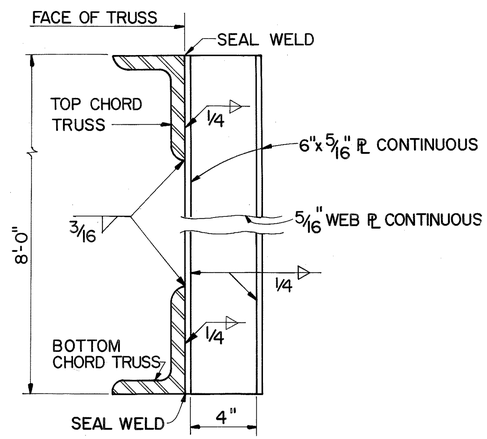

TYPICAL BUILT-UP GALVANIZED STEEL MOUNTING BEAM

SCALE: 3" = 1'-0"

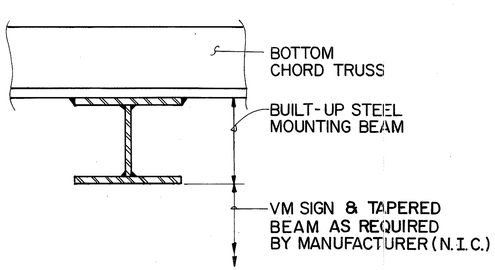

SECTION B SS24 SS24

SCALE: 3" = 1'-0"

ORIGINAL PLAN	SURVEY PLOTTED BY K. WALALUAN	DATE 1/90
NOTE BOOK	DRAWN BY	
	TRACED BY	1/90
	DESIGNED BY K. WADA	
No.	QUANTITIES BY	1/90
	CHECKED BY H. P. CHEN	

1' 0' 1' 2' 3' 4' 5' 6' 7'
3/8" = 1'-0"

0' 1'
3" = 1'-0" GRAPHIC SCALES

HUI PANG CHEN REGISTERED PROFESSIONAL ENGINEER No. 3865-S HAWAII, U.S.A.

THIS WORK WAS PREPARED BY ME OR UNDER MY SUPERVISION.

Hui Pang Chen

DATE	REVISION

STATE OF HAWAII
DEPARTMENT OF TRANSPORTATION
HIGHWAYS DIVISION

VM SIGN CONNECTION DETAILS

SUPPORT STRUCTURES
INTERSTATE ROUTE H-3
F.A.I. PROJ. NO. I-H3-1(66)

SCALE: AS SHOWN DATE: APR. 1992

SHEET No. SS24 OF 36 SHEETS

FED. ROAD DIST. NO.	STATE	FED. AID PROJ. NO.	FISCAL YEAR	SHEET NO.	TOTAL SHEETS
HAWAII	HAW.	I-H3-1(66)	1992	387	440

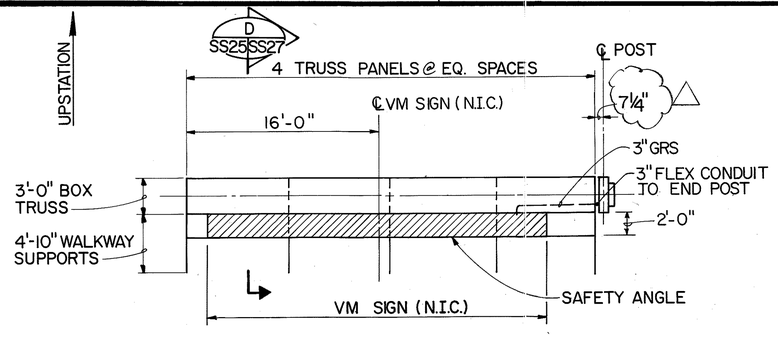

TRUSS PLAN AT I.B. STA. 601+15

SCALE: 1" = 6'-0"

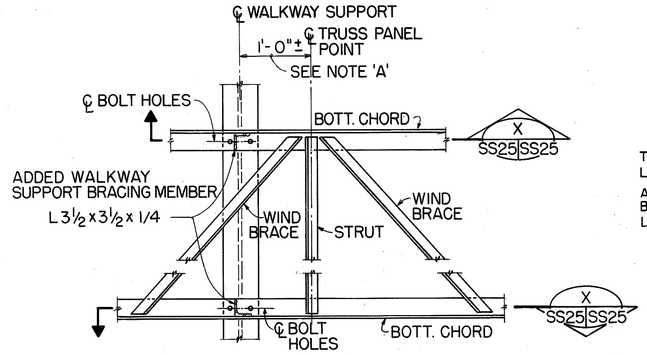

OFFSET WALKWAY SUPPORT DUE TO INTERFERENCE OF WIND BRACE AT TRUSS PANEL POINT

PLAN

SCALE: 1" = 1'-0" Y SS25 SS25

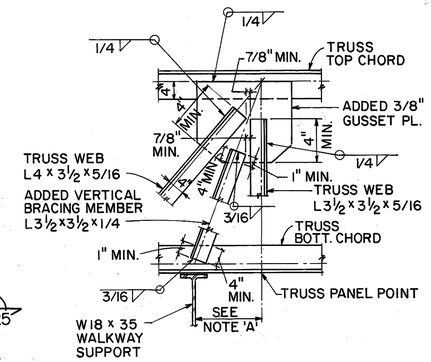

TYPICAL DETAIL WHERE VERTICAL BRACING MEMBER ADDED BETWEEN PANEL POINTS OF TRUSS CHORD

SECTION

SCALE: 3/4" = 1'-0" X SS25 SS25

NOTES:

1. FOR TRUSS PANEL SPACING SEE SHEET NO. SS18.
2. FOR SIGN MOUNTING DETAILS, WALKWAY AND LUMINAIRE SUPPORT DETAILS, SEE SHEET NOS. SS23, SS24, SS27 & SS28.
3. ALL WALKWAY AND WALKWAY/ LUMINAIRE SUPPORTS ARE LOCATED AT TRUSS PANEL POINTS AS SHOWN.
4. WHEN THE LOCATION OF THE WALKWAY SUPPORT INTERFERS WITH THE BOTTOM WIND BRACINGS AT THE TRUSS PANEL POINT, THE WALKWAY SUPPORT SHALL BE RELOCATED. SEE OFFSET DETAILS ON THIS SHEET.

NOTE:

'A' WHEN WALKWAY SUPPORTS AT THE TRUSS PANEL POINTS INTERFERE WITH THE BOTTOM WIND BRACINGS, THE WALKWAY SUPPORTS SHALL BE RELOCATED WITH AN OFFSET OF APPROXIMATELY 1' FROM THE TRUSS PANEL POINT. VERTICAL BRACING MEMBERS SHALL BE ADDED AS SHOWN. THIS WALKWAY SUPPORT SHALL BE OFFSET SUCH THAT THERE ARE NO CONFLICTS WITH THE LANE DISPLAYS, TRAFFIC SIGNALS, LUMINAIRE, ETC. THE AFFECTED LENGTHS OF THE SAFETY ANGLES, PIPES, LUMINAIRE STIFFENER ANGLES, ETC. THAT ARE PART OF THE WALKWAY CONNECTION DETAILS SHALL BE ADJUSTED AS NECESSARY.

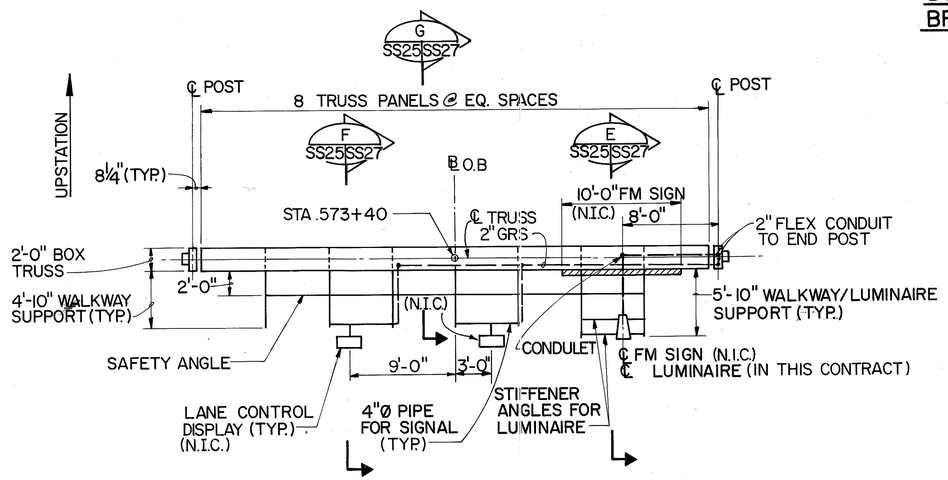

TRUSS PLAN AT O.B. STA. 573+40

SCALE: 1" = 6'-0"

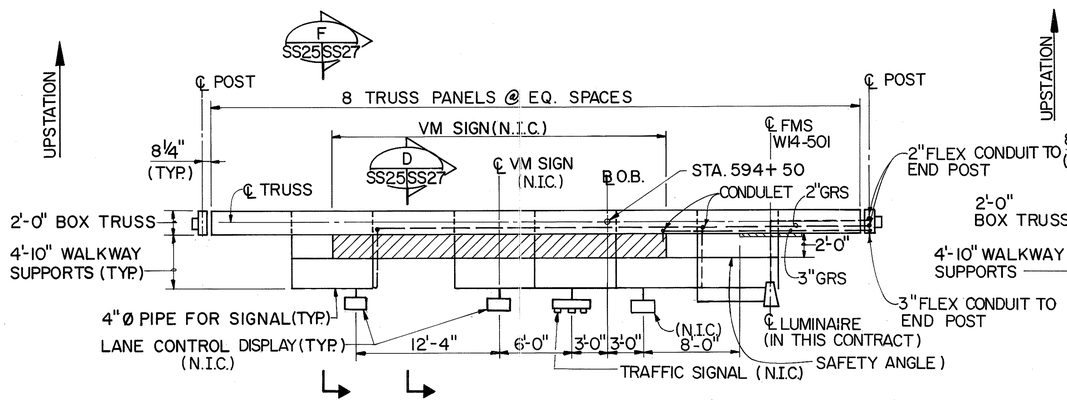

TRUSS PLAN AT O.B. STA. 594+50

SCALE: 1" = 6'-0"

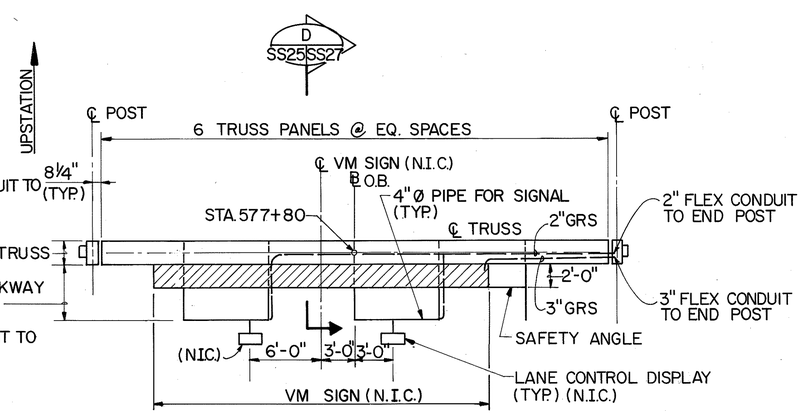

TRUSS PLAN AT O.B. STA. 577+80

(@ O.B. STA. 554+60 N.I.C.)
SCALE: 1" = 6'-0"

DATE	REVISION
2-24-94	CLARIFY DIMENSION PER DCN 66-036
5-25-93	ADDED NOTE 4, PLAN Y, SECTION X & NOTE 'A' PER DCN 66-008

STATE OF HAWAII
DEPARTMENT OF TRANSPORTATION
HIGHWAYS DIVISION

HALAWA APPROACH - WALKWAY PLANS
SUPPORT STRUCTURES
INTERSTATE ROUTE H-3
F.A.I. PROJ. NO. I-H3-1(66)

SCALE: AS SHOWN DATE: APR. 1992

SHEET No. SS25 OF 36 SHEETS

HUI PANG CHEN REGISTERED PROFESSIONAL ENGINEER No. 3865-S HAWAII, U.S.A.

THIS WORK WAS PREPARED BY ME OR UNDER MY SUPERVISION.
Hui Pang Chen

6' 0' 6' 12' 18'
1" = 6'-0" GRAPHIC SCALE

ORIGINAL PLAN | NOTE BOOK | No.
SURVEY PLOTTED BY | DRAWN BY R. MALALUAN | TRACED BY | DESIGNED BY S. CHUNG | QUANTITIES BY S. CHUNG | CHECKED BY K. WONG | DATE 7/90 2/90 7/90 7/90

FED. ROAD DIST. NO.	STATE	FED. AID PROJ. NO.	FISCAL YEAR	SHEET NO.	TOTAL SHEETS
HAWAII	HAW.	I-H3-1(66)	1992	388	440

NOTE: WIND BRACING AND FARADAY SHIELD WIRES NOT SHOWN FOR CLARITY.

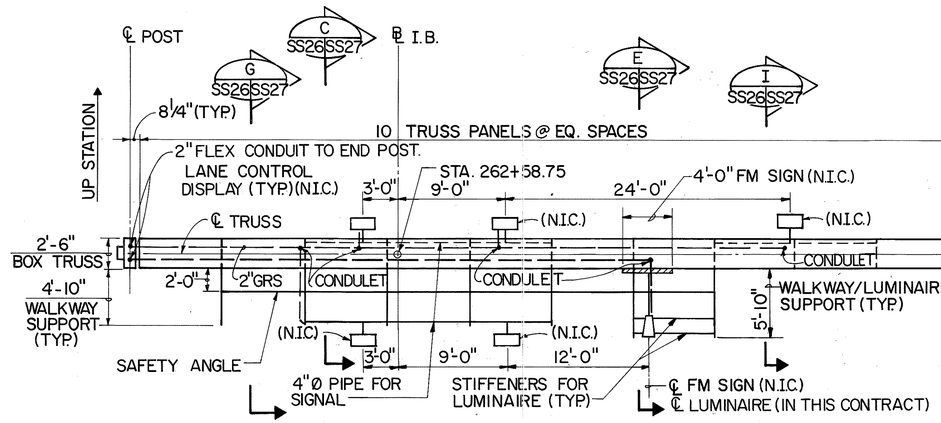

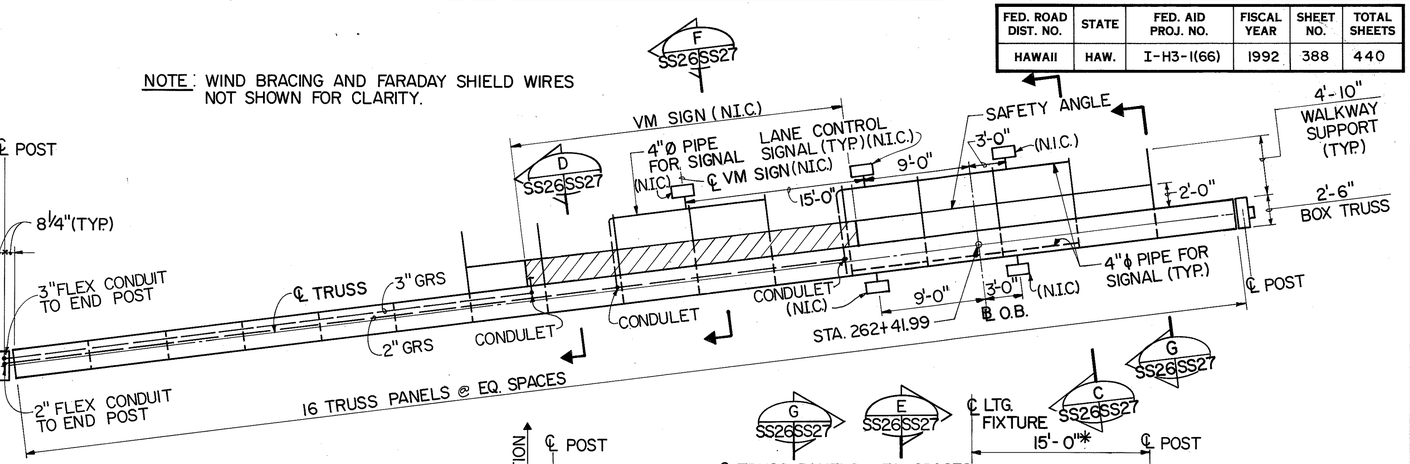

TRUSS PLAN AT I.B. STA. 262+58.75 / O.B. STA. 262+41.99

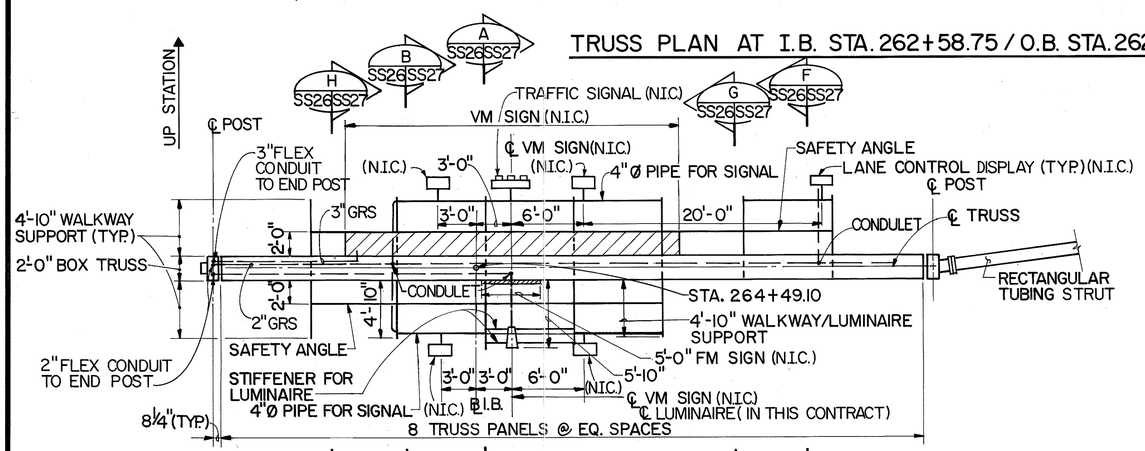

TRUSS PLAN AT I.B. STA. 264+49.10

NOTES: SEE SHEET NO. SS25.

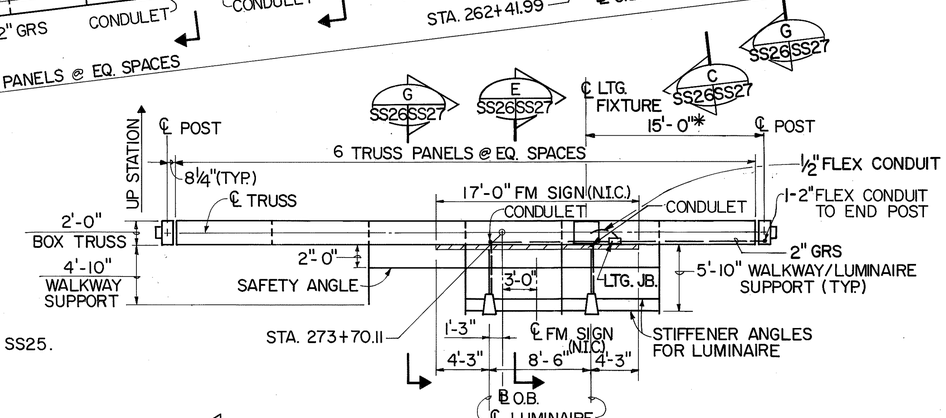

TRUSS PLAN AT O.B. STA. 273+70.11

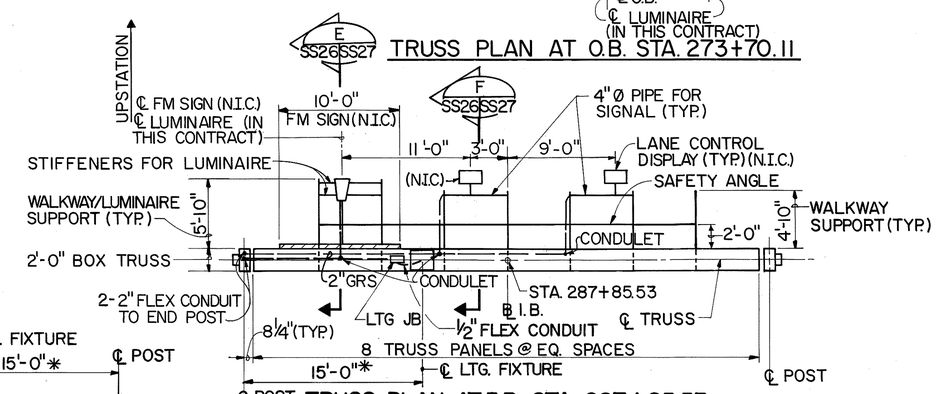

TRUSS PLAN AT I.B. STA. 287+85.53

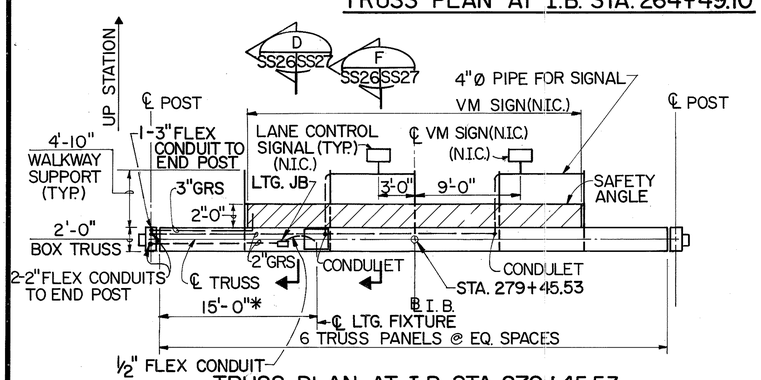

TRUSS PLAN AT I.B. STA. 279+45.53

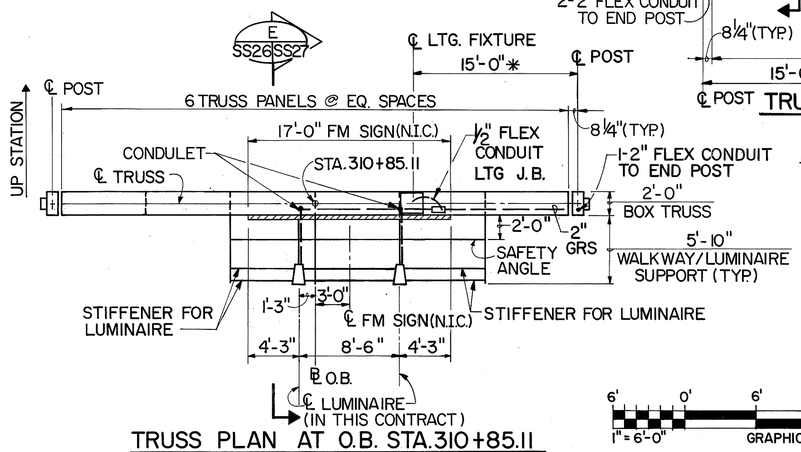

TRUSS PLAN AT O.B. STA. 310+85.11

*LOCATION OF LTG. FIXTURE SHOWN ON PLANS IS APPROXIMATE. THE LOCATION OF THE LTG. FIXTURE MAY BE ADJUSTED IN ORDER TO CLEAR ANY INTERFERENCE WITH THE WALKWAY SUPPORTS.

6' 0' 6' 12' 18'
1" = 6'-0" GRAPHIC SCALE

HUI PANG CHEN
REGISTERED PROFESSIONAL ENGINEER
No. 3865-S
HAWAII, U.S.A.

THIS WORK WAS PREPARED BY ME OR UNDER MY SUPERVISION.
Hui Pang Chen

DATE	REVISION

STATE OF HAWAII
DEPARTMENT OF TRANSPORTATION
HIGHWAYS DIVISION

HAIKU APPROACH - WALKWAY PLANS

SUPPORT STRUCTURES
INTERSTATE ROUTE H-3
F.A.I. PROJ. NO. I-H3-1(66)

SCALE: 1" = 6'-0" DATE: APR. 1992

SHEET NO. SS26 OF 36 SHEETS

ORIGINAL PLAN			DATE
	SURVEY PLOTTED BY	X. MALALUAN	7/90
	TRACED BY	* * * *	*
	DESIGNED BY	K. WADA	7/90
	NOTE BOOK	QUANTITIES BY	3/92
	No.	CHECKED BY S. CHUNG	7/90

FED. ROAD DIST. NO.	STATE	FED. AID PROJ. NO.	FISCAL YEAR	SHEET NO.	TOTAL SHEETS
HAWAII	HAW.	I-H3-1(66)	1992	389	440

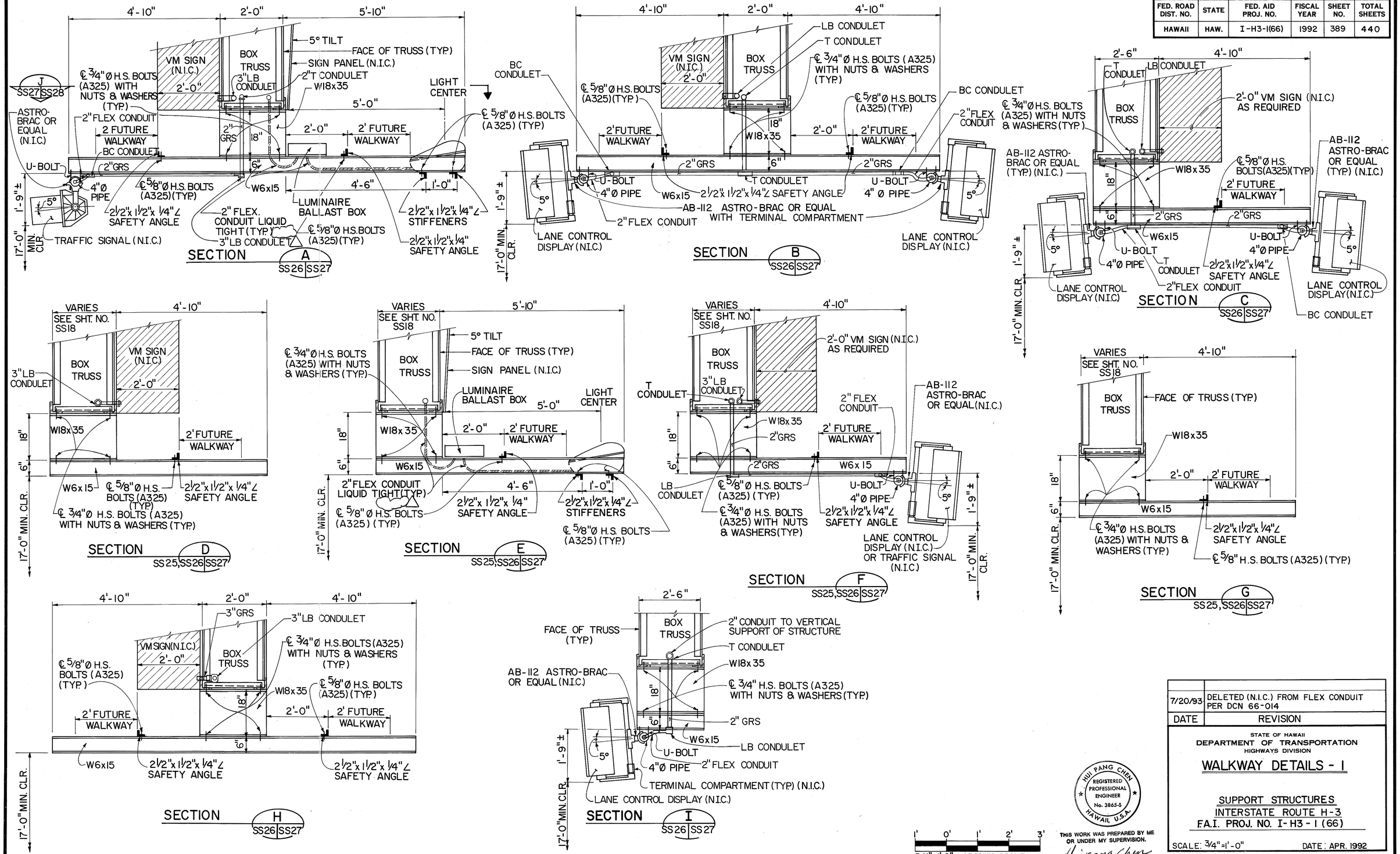

DATE	REVISION
7/20/93	DELETED (N.I.C.) FROM FLEX CONDUIT PER DCN 66-014

STATE OF HAWAII
DEPARTMENT OF TRANSPORTATION
HIGHWAYS DIVISION

WALKWAY DETAILS - I

SUPPORT STRUCTURES
INTERSTATE ROUTE H-3
F.A.I. PROJ. NO. I-H3-1(66)

SCALE: 3/4" = 1'-0" DATE: APR. 1992

HUI PANG CHEN
REGISTERED PROFESSIONAL ENGINEER
No. 3865-S
HAWAII, U.S.A.

THIS WORK WAS PREPARED BY ME OR UNDER MY SUPERVISION.
Hui-pang Chen

SURVEY PLOTTED BY	D. TAMONG	DATE 7/90
DRAWN BY	"	" 7/90
TRACED BY	K. WADA	" 7/90
DESIGNED BY	"	" 7/90
QUANTITIES BY	"	" 7/90
CHECKED BY	S. CHUNG	" 7/90

ORIGINAL PLAN
NOTE BOOK No.

SHEET No. SS27 OF 36 SHEETS

FED. ROAD DIST. NO.	STATE	FED. AID PROJ. NO.	FISCAL YEAR	SHEET NO.	TOTAL SHEETS
HAWAII	HAW.	I-H3-1(66)	1992	390	440

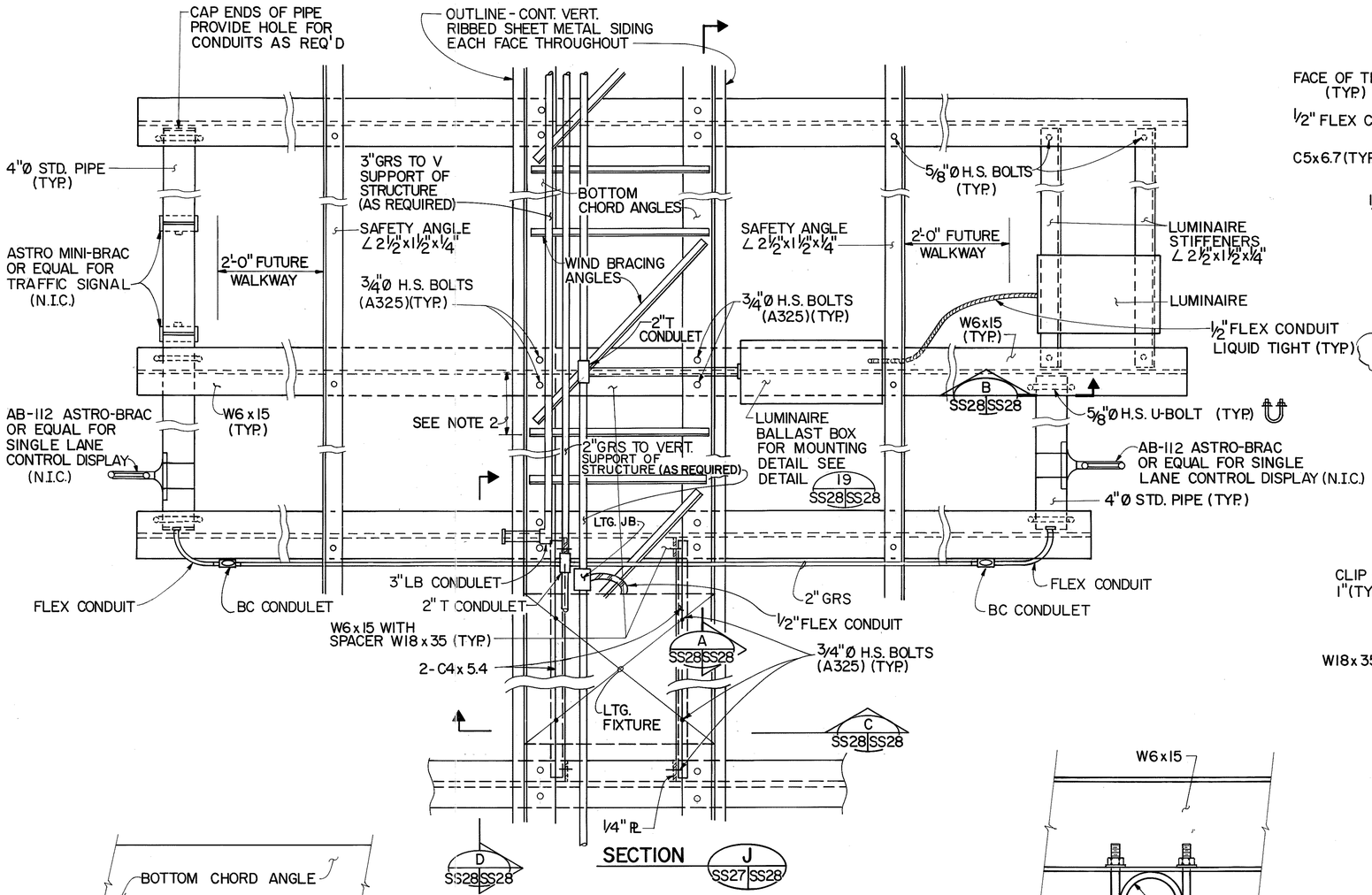

SECTION J SS27 SS28

TYPICAL WALKWAY CONNECTION DETAIL

SCALE: 1½"=1'-0"

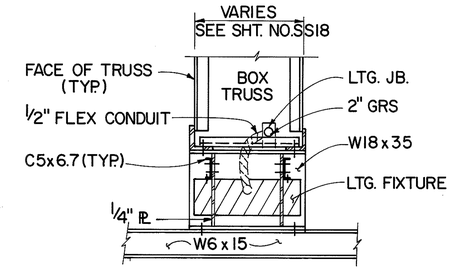

SECTION C SS28 SS28

SCALE: ¾"=1'-0"

NOTES:

1. FOR GENERAL NOTES SEE SHEET NO. SS1
2. LOCATIONS OF SIGN LUMINAIRES AND WALKWAY BRACKETS MAY BE ADJUSTED TO AVOID ANY INTERFERENCE WITH BOTTOM WIND BRACING SUBJECT TO THE APPROVAL OF THE ENGINEER.
3. LOAD OF WALKWAY AND RAILING ON EACH BRACKET SHALL NOT EXCEED 375 LBS.
4. LIVE LOAD ON EACH BRACKET = 500 LBS.
5. FOR LOCATIONS OF SIGN LUMINAIRES AND WALKWAY BRACKETS, SEE SHEET NOS. SS25 & SS26
6. ALL STRUCTURAL STEEL, STEEL PIPE, STEEL STRAP, CONNECTION BOLTS, WASHERS & NUTS IN WALKWAY/LUMINAIRE SUPPORTS SHALL BE HOT DIP GALVANIZED AFTER FABRICATION.
7. VARIABLE MESSAGE SIGNS (VMS), TRAFFIC SIGNALS AND LANE CONTROL DISPLAYS ARE SHOWN FOR INFORMATIONAL PURPOSES ONLY. THESE UNITS ARE TO BE PROVIDED AND INSTALLED BY OTHERS.

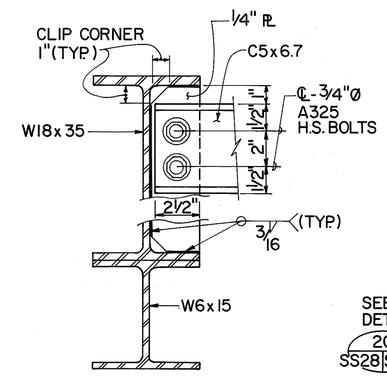

DETAIL 20 SS28 SS28

SCALE: 1"=1'-0"

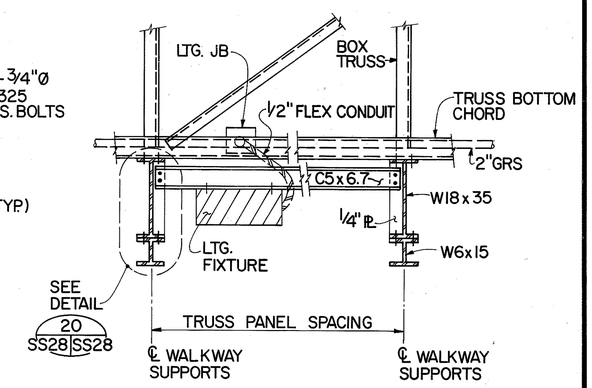

SECTION D SS28 SS28

SCALE: ¾"=1'-0"

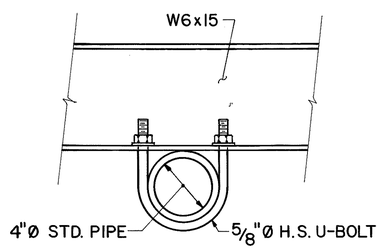

SECTION B SS28 SS28

SCALE: 3"=1'-0"

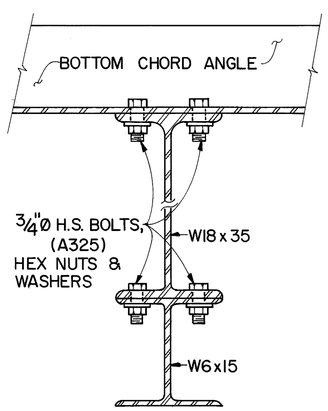

SECTION A SS28 SS28

SCALE: 3"=1'-0"

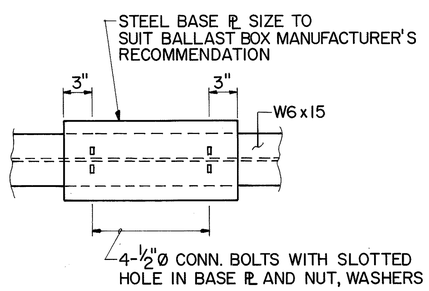

DETAIL 19 SS28 SS28

N.T.S.

1' 0' 1' 2'

1 1/2" = 1'-0"

0' 1'

3" = 1'-0" GRAPHIC SCALES

HUI PANG CHEN REGISTERED PROFESSIONAL ENGINEER No. 3865-S HAWAII, U.S.A.

THIS WORK WAS PREPARED BY ME OR UNDER MY SUPERVISION.

Hui Pang Chen

DATE	REVISION
7/20/93	DELETED (N.I.C.) FROM FLEX CONDUIT PER DCN 66-014

STATE OF HAWAII
DEPARTMENT OF TRANSPORTATION
HIGHWAYS DIVISION

WALKWAY DETAILS - 2

SUPPORT STRUCTURES
INTERSTATE ROUTE H-3
F.A.I. PROJ. NO. I-H3-1(66)

SCALE: AS SHOWN DATE: APR. 1992

SHEET NO. SS28 OF 36 SHEETS

ORIGINAL PLAN			DATE
	SURVEY PLOTTED BY		
	DRAWN BY	T. MIKAMURA	11/90
	TRACED BY		
	DESIGNED BY	K. WADA	11/90
NOTE BOOK	QUANTITIES BY	S. CHUNG	3/92
No.	CHECKED BY	S. CHUNG	11/90

FED. ROAD DIST. NO.	STATE	FED. AID PROJ. NO.	FISCAL YEAR	SHEET NO.	TOTAL SHEETS
HAWAII	HAW.	I-H3-1(66)	1992	391	440

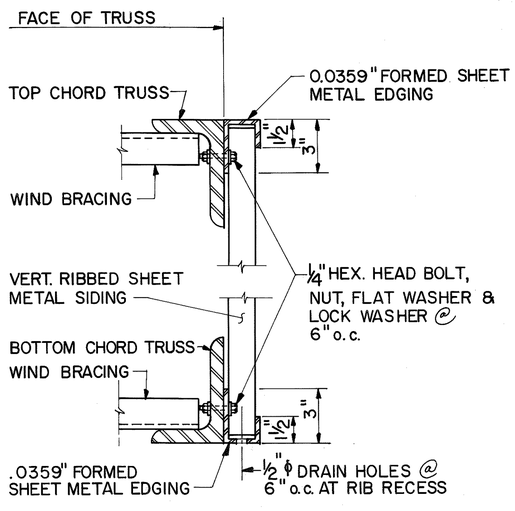

SECTION A
SCALE: 3"=1'-0"
SS29 SS29 SS19

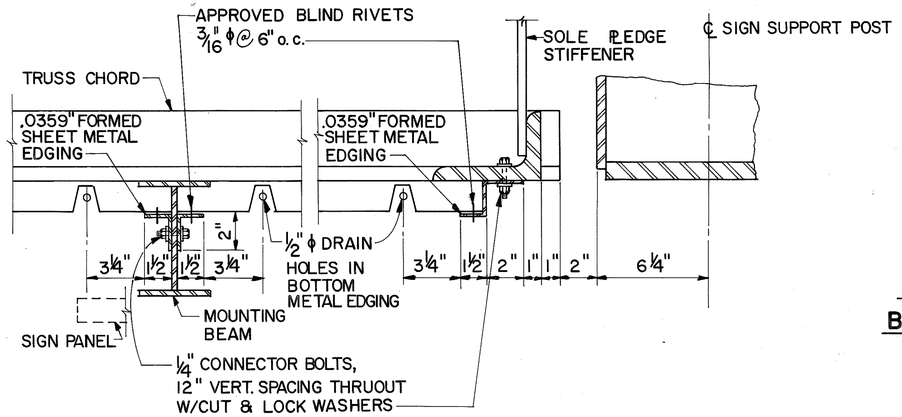

SECTION B
SCALE: 3"=1'-0"
SS29 SS29 SS23

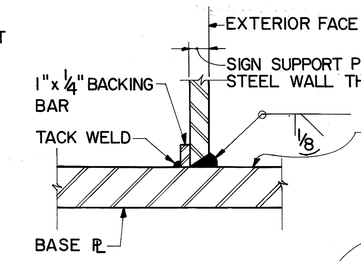

TYPICAL SUPPORT POST BASE CONNECTION DETAILS

DETAIL 11
N.T.S.
SS16 SS29 SS31

NOTE:
FOR ELEVATION AT BOTTOM OF BASE PLATES, SEE TABLE ON SHEET NO. SS18.

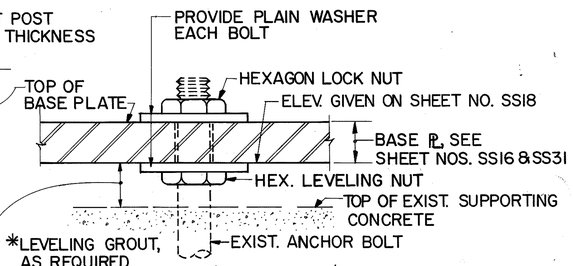

*TO BE POURED AFTER STRUCTURE IS PLUMBED

TYPICAL BASE PL ANCHOR BOLT CONNECTION DETAIL

DETAIL 10
SCALE: 3"=1'-0"
SS16, SS17 SS29 SS6

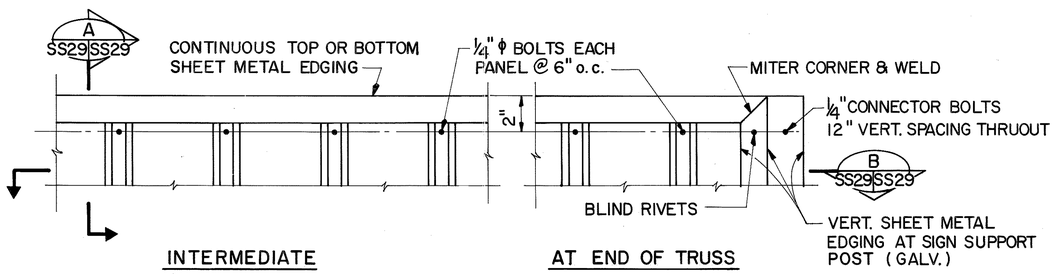

EXTERIOR ELEVATION
SCALE: 3"=1'-0"

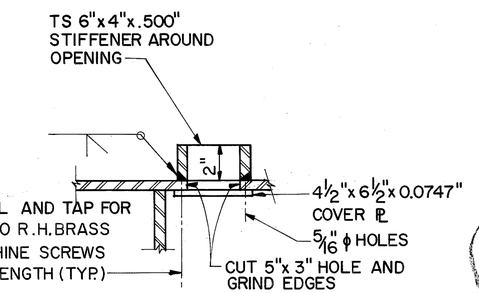

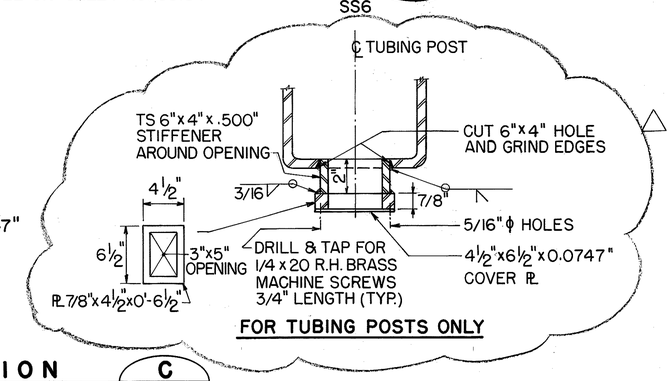

SECTION C
SCALE: 3"=1'-0"
SS29 SS29

NOTE:
PLACE HAND HOLES IN ALL POSTS.

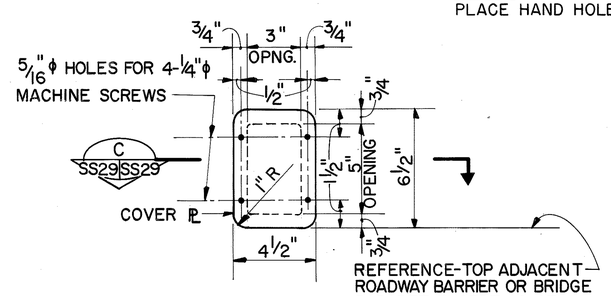

ELEVATION

HAND HOLE & COVER PL DETAIL

DETAIL 12
SCALE: 3"=1'-0"
SS16 SS29 SS30, SS31

RIBBED SHEET METAL NOTES

1. ALL RIBBED SHEET METAL AND FORMED EDGING SHALL BE GALVANIZED STEEL CONFORMING TO ASTM DESIGNATION: A446, GRADE A; G165 COATING DESIGNATION IN CONFORMANCE WITH ASTM DESIGNATION: A525.
2. CONNECTION BOLTS, NUTS AND WASHERS TO BE GALVANIZED STEEL ASTM A307.

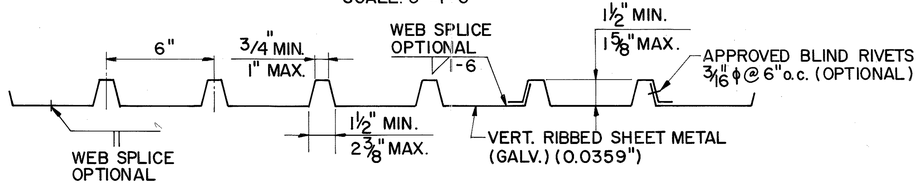

TYPICAL RIBBED SHEET METAL SECTIONS
SCALE: 3"=1'-0"

SURVEY PLOTTED BY		DATE
DRAWN BY	K. WALALUAN	
TRACED BY		1/90
REVIEWED BY	H.P. CHEN	1/90
DESIGNED BY	S. CHUNG	3/92
QUANTITIES BY		1/90
CHECKED BY	K. WADA	

ORIGINAL PLAN
NOTE BOOK
No.

DATE	REVISION
5-25-93	REVISED SECTION C PER DCN 66-008

STATE OF HAWAII
DEPARTMENT OF TRANSPORTATION
HIGHWAYS DIVISION

MISCELLANEOUS DETAILS-1

SUPPORT STRUCTURES
INTERSTATE ROUTE H-3
F.A.I. PROJ. NO. I-H3-1(66)

SCALE: AS SHOWN DATE: APR. 1992

HUI PANG CHEN REGISTERED PROFESSIONAL ENGINEER No. 3865-S HAWAII, U.S.A.

THIS WORK WAS PREPARED BY ME OR UNDER MY SUPERVISION.
Hui Pang Chen

0' 1'
3"=1'-0" GRAPHIC SCALE

SHEET No. SS29 OF 36 SHEETS

FED. ROAD DIST. NO.	STATE	FED. AID PROJ. NO.	FISCAL YEAR	SHEET NO.	TOTAL SHEETS
HAWAII	HAW.	I-H3-1(66)	1992	392	440

NOTE 'A': DRILL FOR 2" DIAMETER x 1" SHORT COUPLING AND PLUG WITH RECESSED PIPE AS REQUIRED.

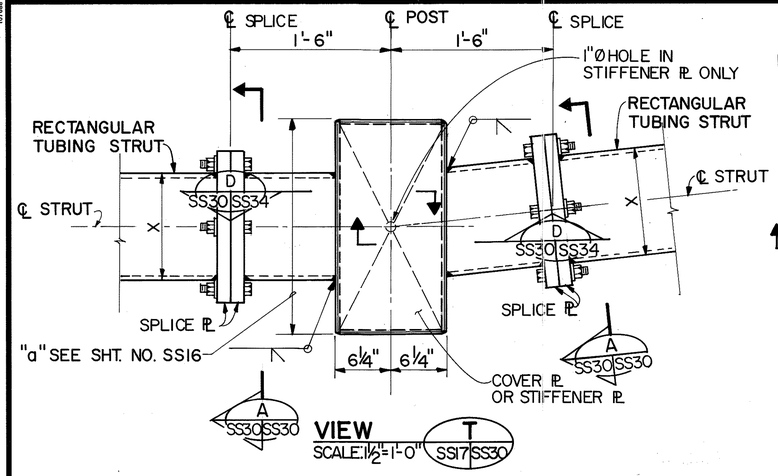

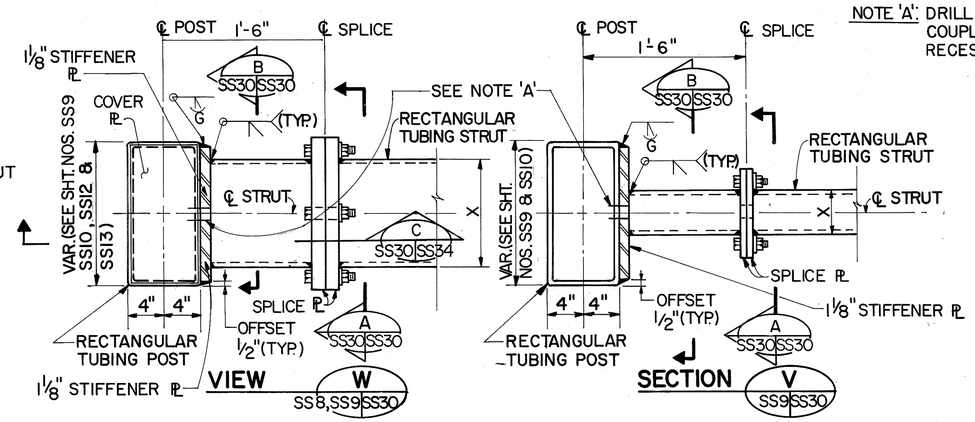

TYPICAL END CONNECTION FOR RECTANGULAR TUBING

SCALE: 1½"=1'-0"

NOTE:

THE CONTRACTOR SHALL PROVIDE SPLICE OF TUBING STRUT AT THE LOCATIONS AS SHOWN ON PLANS. IN CASE ADDITIONAL SPLICES OF TUBING STRUT ARE REQUIRED, THE SPLICES SHALL BE LOCATED AT ABOUT 1/4 SPAN FROM ℄ OF SUPPORT AND INTERFERENCE WITH THE FARADAY SHIELD WIRE CONNECTIONS SHALL BE AVOIDED. IN NO CASE SHALL SPLICES BE LOCATED AT MIDSPAN OF THE STRUT. LOCATIONS OF SPLICES SHALL BE INDICATED ON SHOP FABRICATION DRAWINGS FOR APPROVAL. FOR STRUTS THROUGH WHICH WIRES WILL BE PULLED, PLACE HANDHOLE ON BOTTOM-SIDE OF STRUT WHERE ADDITIONAL SPLICES ARE PROVIDED. NEAREST EDGE OF HANDHOLE COVER PL IS 1'-0" FROM ℄ SPLICE & CENTERED ABOUT ℄ STRUT. HANDHOLE NEEDED ONLY ON SIDE OF SPLICE NEAREST SUPPORT POSTS PROVIDING CONDUIT STUBOUTS FOR WIRE ACCESS. SEE DETAIL 12 SS30 SS29 FOR HANDHOLE DETAILS.

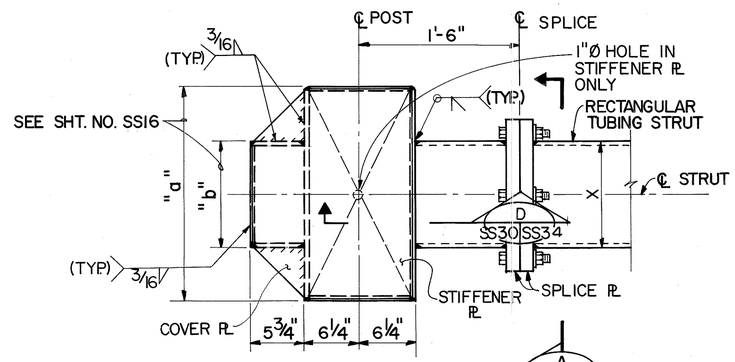

VIEW L (AS SHOWN)
SCALE: 1½"=1'-0"
SS30
SS16, SS17

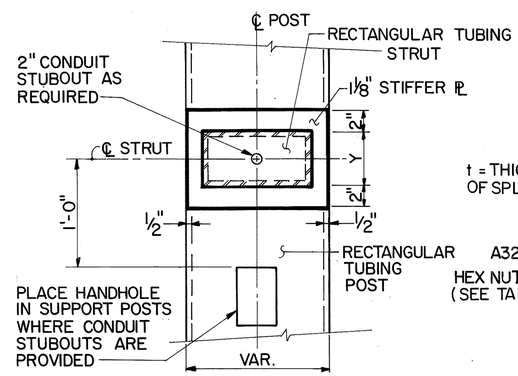

SECTION B
SCALE: ½"=1'-0"
SS30 SS30

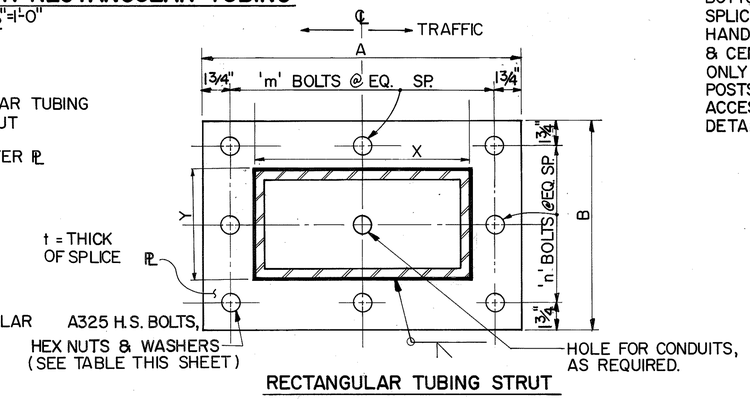

RECTANGULAR TUBING STRUT

SECTION A
SS30 SS30

TYPICAL SPLICE DETAIL FOR TUBING STRUT

SCALE: 3"=1'-0"

RECTANGULAR TUBING STRUT	X	Y	A	B	NO. OF BOLTS m	NO. OF BOLTS n	t	BOLT HOLE SIZE	BOLT SIZE
8"x 6"x ½"	8	6	1'-6½"	1'-3½"	4	3	1⅝"	15/16"	¾"
12"x 6"x ½"	12	6	1'-9½"	1'-3½"	4	3	1¾"	1¼"	1"
18"x 6"x ½"	18	6	2'-3½"	1'-3½"	5	3	2"	1¼"	1"
16"x 12"x ½"	12	16	1'-7½"	2'-1½"	4	5	2"	1¼"	1"

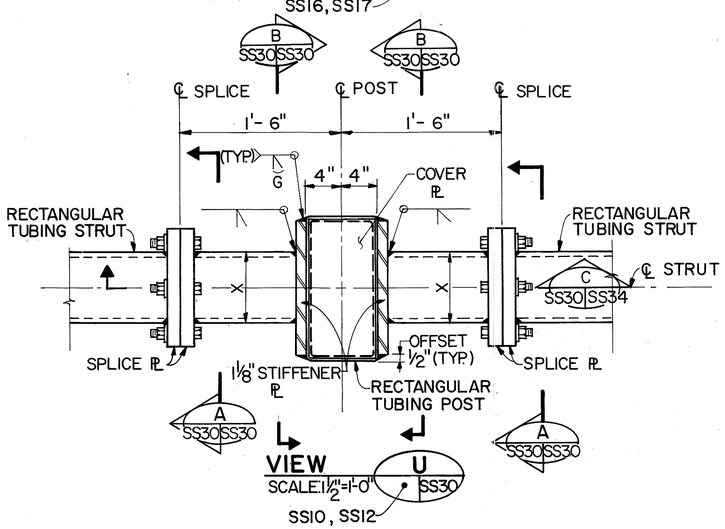

VIEW U
SCALE: 1½"=1'-0"
SS30
SS10, SS12

DATE	REVISION
12/29/93	REV. DIM. A & B IN TABLE PER DCN 66-027
7/20/93	REVISED SECTION 'A' AND TABLE PER DCN 66-015
5-25-93	REVISED NOTE 'A' PER DCN 66-008

STATE OF HAWAII
DEPARTMENT OF TRANSPORTATION
HIGHWAYS DIVISION

MISCELLANEOUS DETAILS-2

SUPPORT STRUCTURES
INTERSTATE ROUTE H-3
F.A.I. PROJ. NO. I-H3-1(66)

SCALE: AS SHOWN DATE: APR. 1992

SHEET No. SS30 OF 36 SHEETS

0' 1'
3"=1'-0"
0' 1' 2'
1 1/2"=1'-0" GRAPHIC SCALES

HUI PANG CHEN
REGISTERED PROFESSIONAL ENGINEER
No. 3865-S
HAWAII, U.S.A.

THIS WORK WAS PREPARED BY ME OR UNDER MY SUPERVISION.
Hui-pang Chen

ORIGINAL PLAN		DATE
	SURVEY PLOTTED BY	
	DRAWN BY K. MALALUAN	11/90
	TRACED BY	
NOTE BOOK	DESIGNED BY K. WADA	11/90
	QUANTITIES BY S. CHUN	3/92
No.	CHECKED BY S. CHUN	11/90

FED. ROAD DIST. NO.	STATE	FED. AID PROJ. NO.	FISCAL YEAR	SHEET NO.	TOTAL SHEETS
HAWAII	HAW.	I-H3-1(66)	1992	393	440

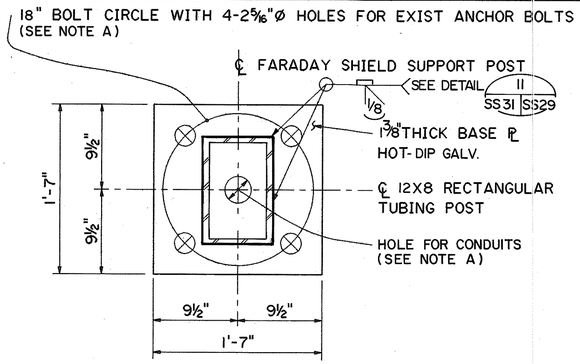

12x8 RECTANGULAR TUBING POST

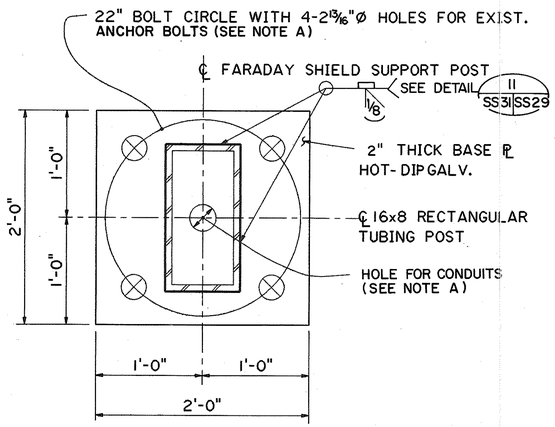

16x8 RECTANGULAR TUBING POST

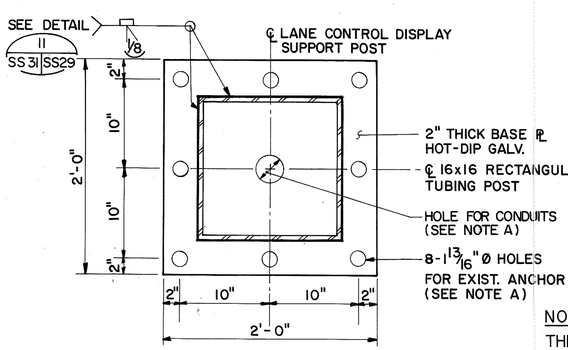

16x16 RECTANGULAR TUBING POST

SECTION I SS8, SS9, SS10, SS12 SS31

TYPICAL BASE PLATE FOR GROUND-MOUNTED POST

SCALE: 1½" = 1'-0"

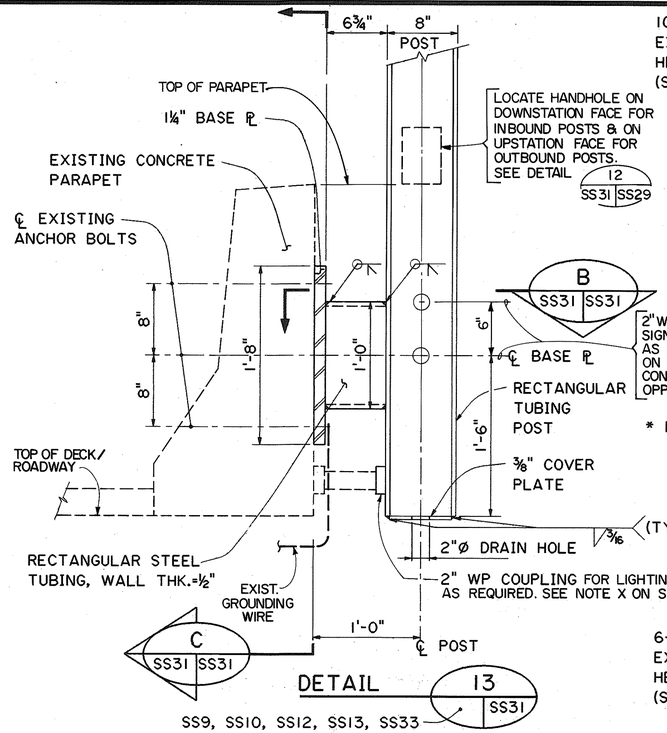

DETAIL 13 SS9, SS10, SS12, SS13, SS33 SS31

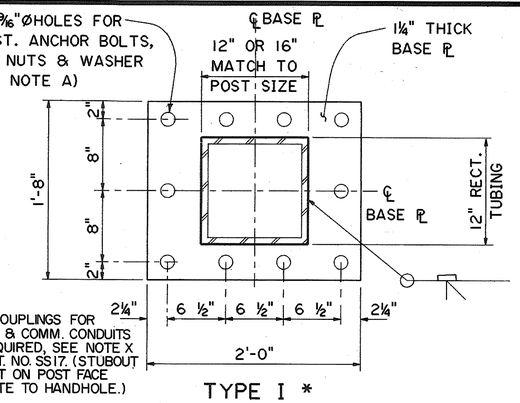

TYPE I *

* FOR I.B. STA. 257+51, 258+66, 261+70, 273+73.70, 275+74.70, 297+57.20 & 656+52.67

O.B. STA. 258+40, 261+40, 297+66.79, 304+39.28, 541+70.00 & 657+42.67

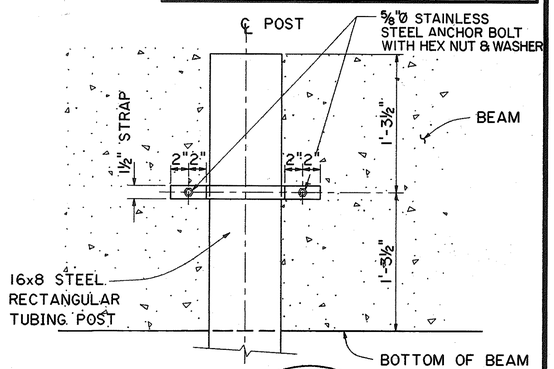

SECTION D SS31 SS31

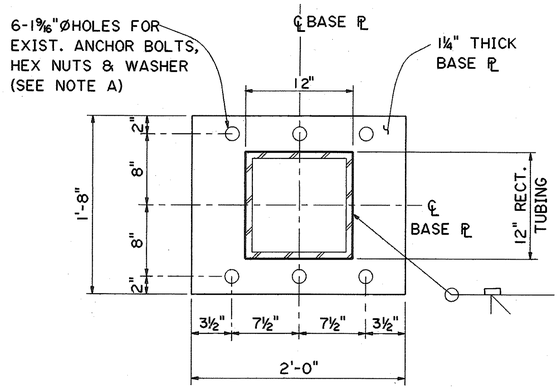

TYPE II
(FOR ALL OTHER LOCATIONS)

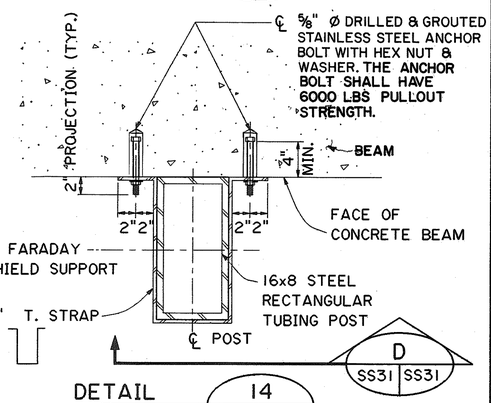

DETAIL 14 SS33 SS31

TOP CONNECTION DETAIL FOR TUBING POST AT TUNNEL PORTAL FACE

SCALE: 1½" = 1'-0"

OCCURS AT I.B. STA. 656+52.67 BOTH POSTS
O.B. STA. 657+42.67 LEFT POST (LOOKING DOWNSTATION)

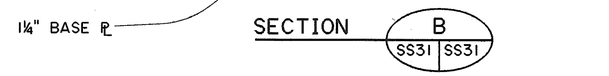

SECTION B SS31 SS31

SECTION C SS31 SS31

TYPICAL BASE CONNECTION DETAIL FOR PARAPET MOUNTED TUBING POST

SCALE: 1½" = 1'-0"

NOTE A:

THE CONTRACTOR SHALL VERIFY THE LOCATIONS OF THE EXIST. ANCHOR BOLTS & THE NUMBER AND SIZES OF CONDUITS IN THE FIELD PRIOR TO FABRICATION OF BASE PLATE.
PROVIDE STANDARD-SIZE HOLES (1-5/16"ø) IN BASE PLATE FOR EXIST. ANCHOR BOLTS AT TYPE II BASE CONNECTION FOR FARADAY SHIELD SUPPORT STRUCTURES ADJACENT TO EXPANSION JOINTS.
IB STA. 274+77.04, 285+05.53, 285+97.07 & 296+53.70
OB STA. 274+61.54, 285+74.49, 286+63.49 & 298+62.28
PROVIDE HOLES DIMENSIONED AS SHOWN AT ALL OTHER LOCATIONS.

GRAPHIC SCALE
1' 9" 6" 3" 0' 1' 2'
1½" = 1'-0"

HUI PANG CHEN REGISTERED PROFESSIONAL ENGINEER No. 3865-S HAWAII, U.S.A.

THIS WORK WAS PREPARED BY ME OR UNDER MY SUPERVISION

Hui Pang Chen

DATE	REVISION
5-25-93	REVISED TYPE I BASE CONNECTION AND DETAIL 14 PER DCN 66-008

STATE OF HAWAII
DEPARTMENT OF TRANSPORTATION
HIGHWAYS DIVISION

MISCELLANEOUS DETAILS-3

SUPPORT STRUCTURES
INTERSTATE ROUTE H-3
F.A.I. PROJ. NO. I-H3-1(66)

SCALE: AS SHOWN DATE: APR. 1992

SHEET NO. SS31 OF 36 SHEETS

ORIGINAL PLAN		DATE
	SURVEY PLOTTED BY	
	DRAWN BY	
	TRACED BY	TWO
	DESIGNED BY S. CHUNG	3/92
NOTE BOOK	QUANTITIES BY S. CHUNG	1990
NO.	CHECKED BY K. WADA	

2410V138 2410: V138 SS0164.FGB:1 26SEP89-10.33.20

FED. ROAD DIST. NO.	STATE	FED. AID PROJ. NO.	FISCAL YEAR	SHEET NO.	TOTAL SHEETS
HAWAII	HAW.	I-H3-1(66)	1992	394	440

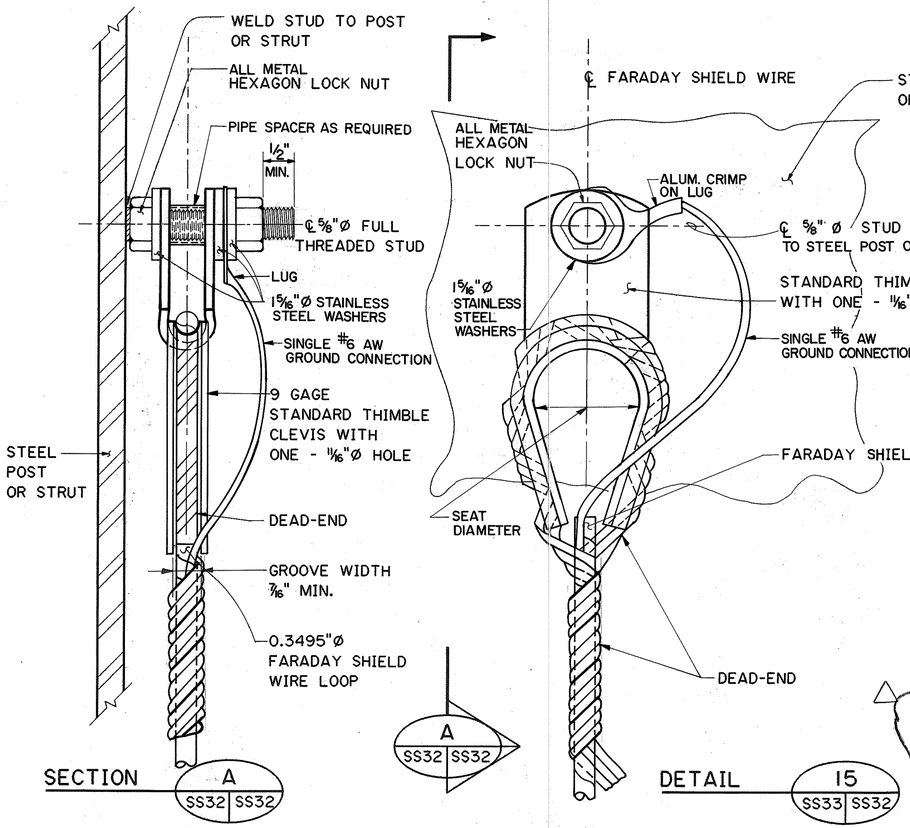

TYPICAL FARADAY SHIELD WIRE DEAD-END CONNECTION TO STEEL

N.T.S.

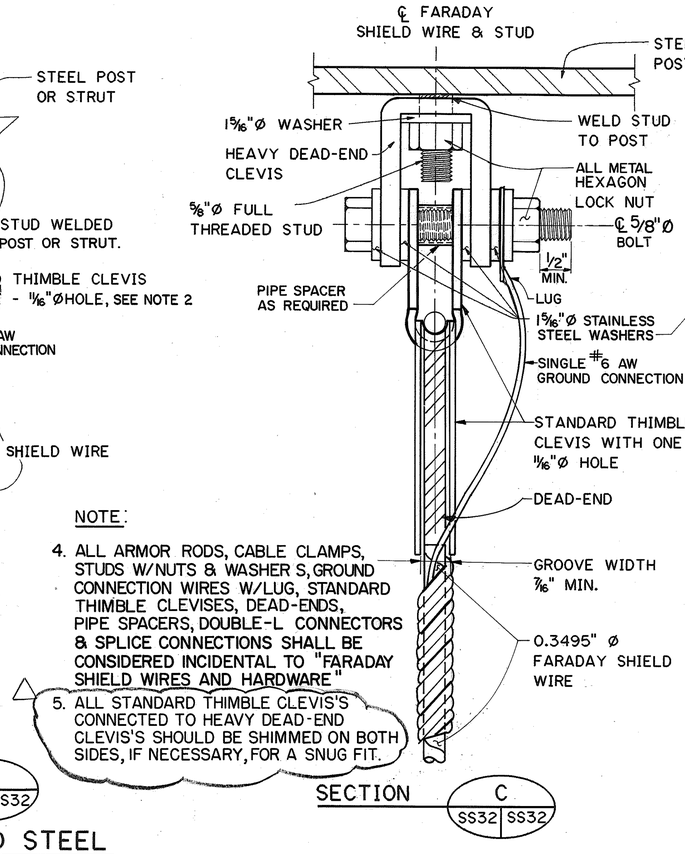

NOTE:

4. ALL ARMOR RODS, CABLE CLAMPS, STUDS W/NUTS & WASHERS, GROUND CONNECTION WIRES W/LUG, STANDARD THIMBLE CLEVISES, DEAD-ENDS, PIPE SPACERS, DOUBLE-L CONNECTORS & SPLICE CONNECTIONS SHALL BE CONSIDERED INCIDENTAL TO "FARADAY SHIELD WIRES AND HARDWARE"
5. ALL STANDARD THIMBLE CLEVIS'S CONNECTED TO HEAVY DEAD-END CLEVIS'S SHOULD BE SHIMMED ON BOTH SIDES, IF NECESSARY, FOR A SNUG FIT.

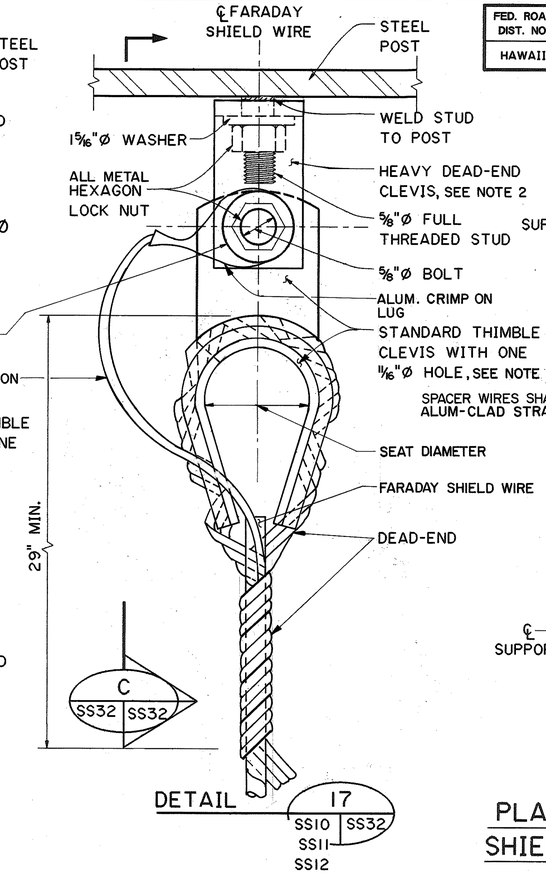

FARADAY SHIELD WIRE ANGLED DEAD-END CONNECTION TO STEEL

N.T.S.

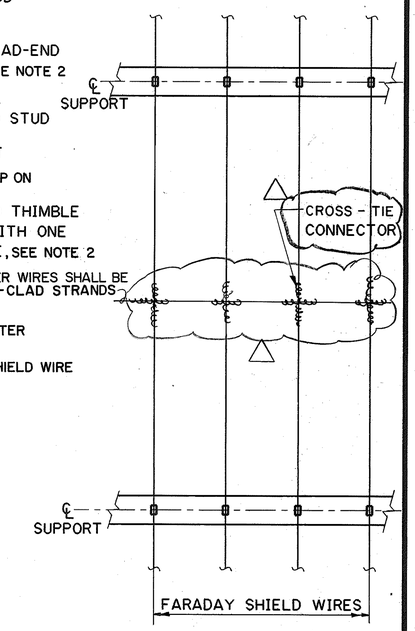

PLAN-TYPICAL FARADAY SHIELD WIRE SPACER

N.T.S.

* OCCURS AT SPANS SHOWN IN TABLE A SHEET SS3.

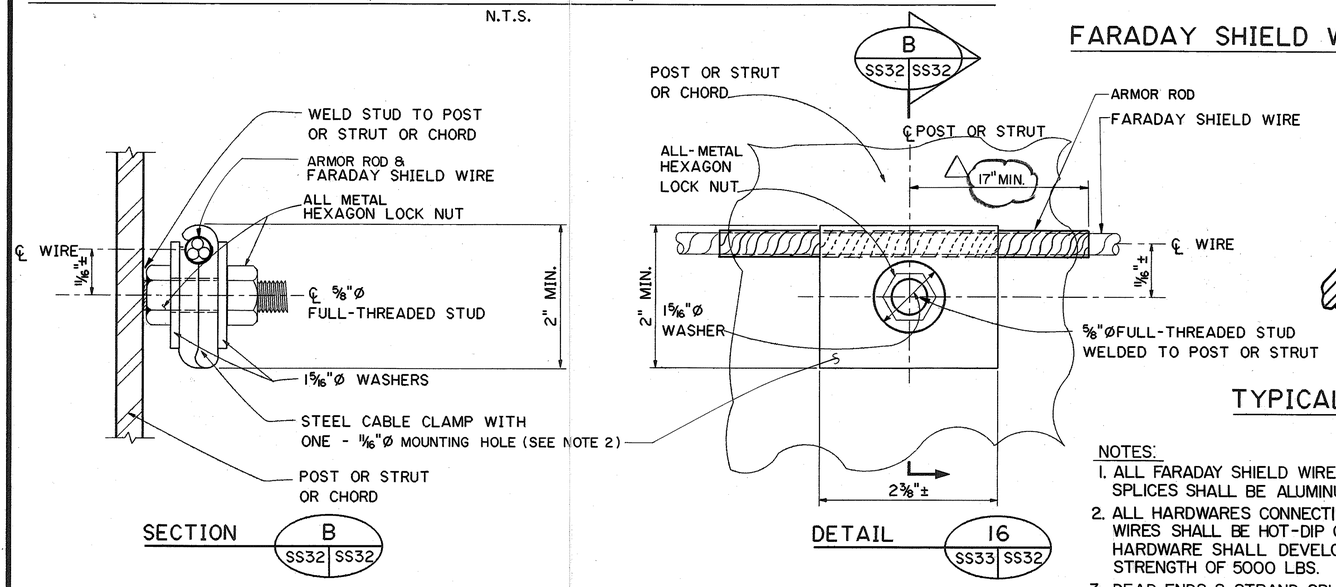

TYPICAL THROUGH FARADAY SHIELD WIRE CONNECTI ON

N.T.S.

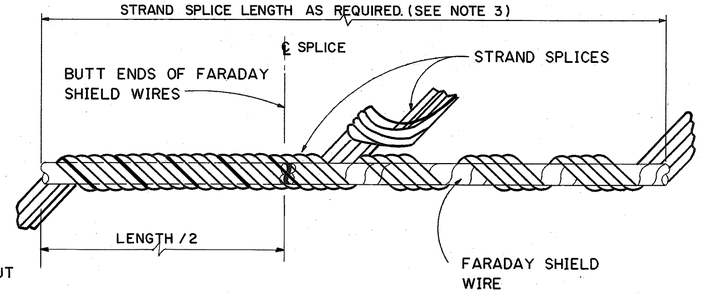

TYPICAL FARADAY SHIELD WIRE SPLICE CONNECTION

N.T.S.

NOTES:

1. ALL FARADAY SHIELD WIRES, DEADENDS & STRAND SPLICES SHALL BE ALUMINUM-CLAD STEEL WIRES.
2. ALL HARDWARES CONNECTING FARADAY SHIELD WIRES SHALL BE HOT-DIP GALVANIZED STEEL. ALL HARDWARE SHALL DEVELOP A MIN. BREAKING STRENGTH OF 5000 LBS.
3. DEAD ENDS & STRAND SPLICES SHALL DEVELOP A MIN. ULT. HOLDING STRENGTH OF 10,280 LBS.

HUI PANG CHEN
REGISTERED PROFESSIONAL ENGINEER
No. 3865-S
HAWAII, U.S.A.

THIS WORK WAS PREPARED BY ME OR UNDER MY SUPERVISION

Hui Pang Chen

DATE	REVISION
5-25-93	REVISED PLAN-TYPICAL FARADAY SHIELD WIRE SPACER & DETAIL 16; ADDED NOTE 5 PER DCN 66-008

STATE OF HAWAII
DEPARTMENT OF TRANSPORTATION
HIGHWAYS DIVISION

MISCELLANEOUS DETAILS-4

SUPPORT STRUCTURES
INTERSTATE ROUTE H-3
F.A.I. PROJ. NO. I-H3-1(66)

SCALE: AS SHOWN DATE: APR. 1992

SHEET NO. SS32 OF 36 SHEETS

ORIGINAL PLAN		DATE
	SURVEY PLOTTED BY	
	DRAWN BY	
NOTE BOOK	DESIGNED BY	7/90
	DESIGNED BY S. CHUN	3/92
	QUANTITIES BY S. CHUN	7/90
NO.	CHECKED BY H.P. CHEN	

2410V138 2410: V138 SS0165.FGB:1 17OCT89-12:02.10

FED. ROAD DIST. NO.	STATE	FED. AID PROJ. NO.	FISCAL YEAR	SHEET NO.	TOTAL SHEETS
HAWAII	HAW.	I-H3-1(66)	1992	395	440

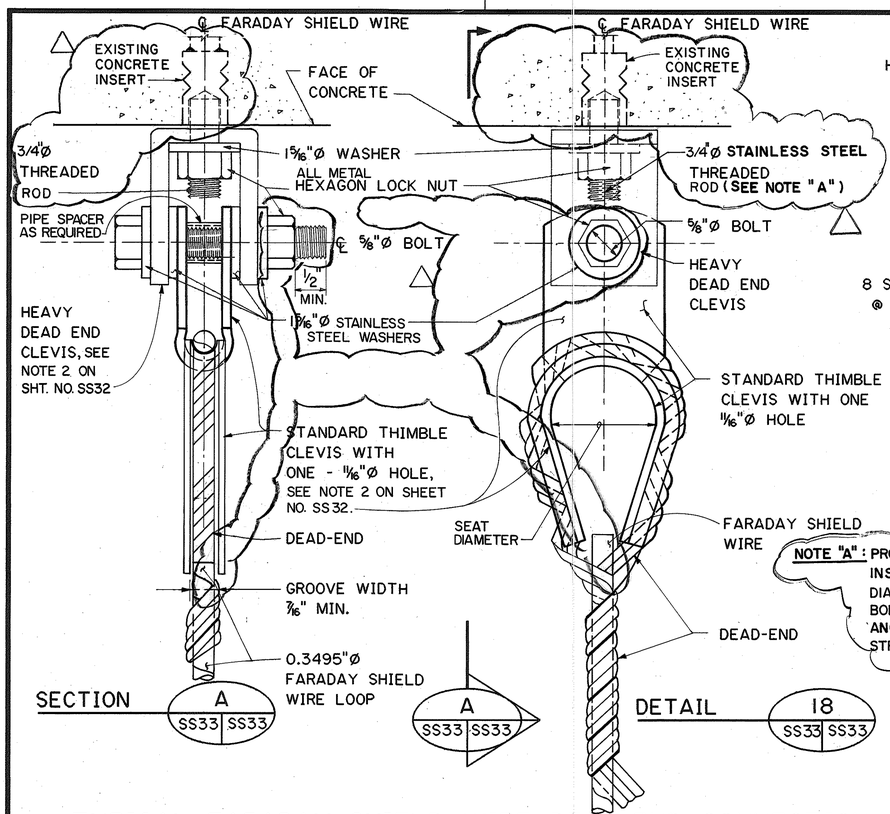

SECTION A (SS33 | SS33)

A (SS33 | SS33)

DETAIL 18 (SS33 | SS33)

TYPICAL FARADAY SHIELD WIRE DEAD-END CONNECTION TO CONCRETE

NTS

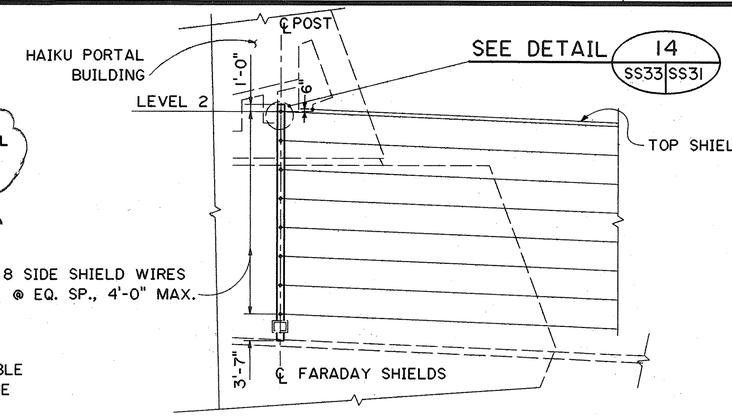

SECTION G (SS12 | SS33)
N.T.S.

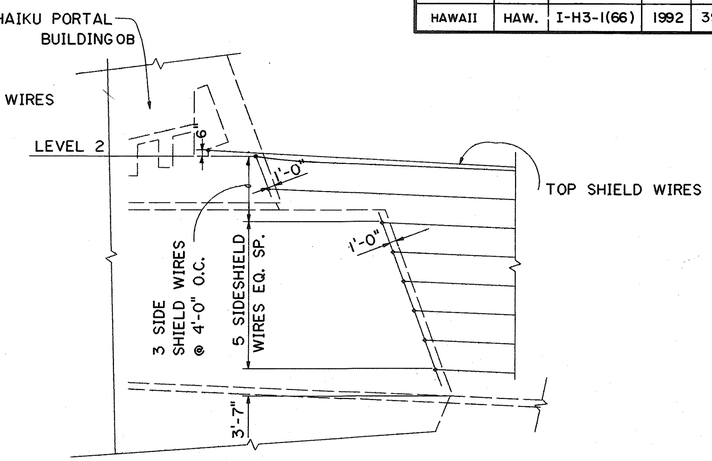

SECTION H (SS12 | SS33)
N.T.S.

NOTE "A": PROVIDE 3/4"SS THREADED ROD WHERE CONCRETE INSERT IS PROVIDED. OTHERWISE PROVIDE 5/8" DIAMETER SS DRILLED AND GROUTED ANCHOR BOLT WITH NUT AND WASHER AS REQUIRED. THE ANCHOR BOLT SHALL HAVE 6600 LBS. PULL STRENGTH OR 3500 LBS. SHEAR STRENGTH.

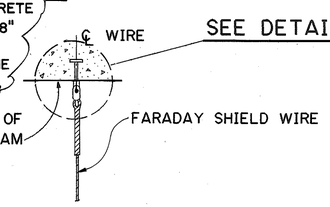

SEE DETAIL 18 (SS33 | SS33)

SECTION J (SS12 | SS33)
N.T.S.

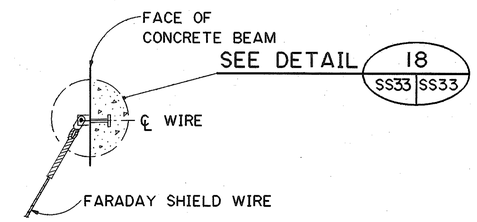

SECTION K (SS12 | SS33)
N.T.S.

NOTE: SEE NOTES 1 THROUGH 4 ON SHEET NO. SS32.

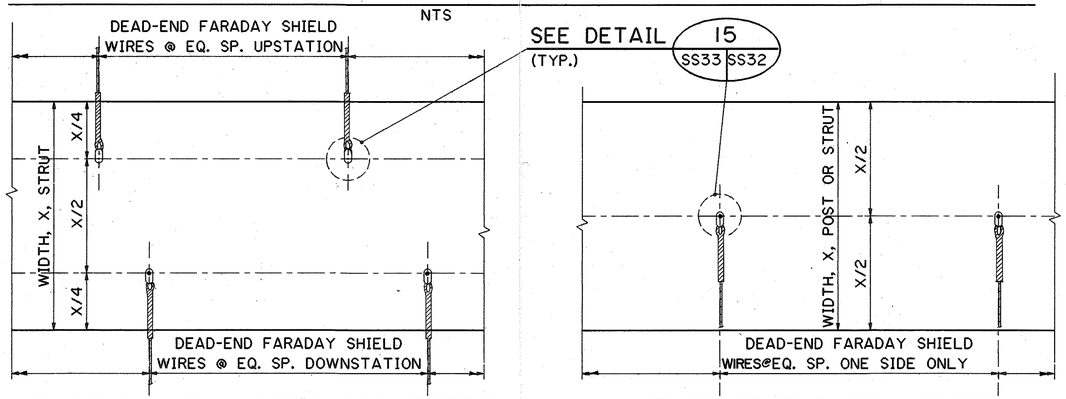

TYPE I UNBALANCED CONNECTION STRUT

OCCURS AT IB STA. 261+70.00, 262+58.75, 264+49.10, 265+34.70, 266+26.05

& OB. STA. 261+40.00 (OVER O.B. LANES), 262+41.99, 264+25.61, 265+13.11, 266+07.62, 290+34.28 & 294+03.28

TYPE II END CONNECTION-POST AND STRUT

STRUT OCCURS AT OB. STA. 261+40.00 (OVER SERVICE RD), & 264+25.61

POST* OCCURS AT IB STA. 656+52.67(LT&RT), 305+35.53 (LT&RT) & OB. STA. 657+42.67(RT), 261+40.00(MIDDLE), & 305+40.11 (LT&RT).

TYPE III THROUGH CONNECTION - POST AND STRUT

AT ALL OTHER STATIONS

*LOOKING UPSTATION

FARADAY SHIELD WIRE CONNECTION LAY-OUT

N.T.S.

FOR TYPES IV & V SEE SHEET NO. SS33A

GRAPHIC SCALE
10' 0' 10' 20'
1" = 10'-0"

7-14-93	REVISED FARADAY SHIELD WIRE DEAD-END CONNECTION TO CONCRETE & TYPE II END CONN. FOR POST & STRUT PER DCN 66-008
DATE	REVISION

STATE OF HAWAII
DEPARTMENT OF TRANSPORTATION
HIGHWAYS DIVISION

MISCELLANEOUS DETAILS-5

SUPPORT STRUCTURES
INTERSTATE ROUTE H-3
F.A.I. PROJ. NO. I-H3-1(66)

SCALE: AS SHOWN DATE: APR. 1992

HUI PANG CHEN REGISTERED PROFESSIONAL ENGINEER No. 3865-S HAWAII, U.S.A.

THIS WORK WAS PREPARED BY ME OR UNDER MY SUPERVISION

Hui pang Chen

SHEET NO. SS33 OF 36 SHEETS

SURVEY PLOTTED BY
DRAWN BY
TRACED BY
DESIGNED BY
QUANTITIES BY
CHECKED BY
DATE

ORIGINAL PLAN
NOTE BOOK
NO.

2410V138 2410: V138 SS0166.FGB;1 310CT89-17.49.50

FED. ROAD DIST. NO.	STATE	FED. AID PROJ. NO.	FISCAL YEAR	SHEET NO.	TOTAL SHEETS
HAWAII	HAW.	I-H3-1(66)	1992	395 S-1	440

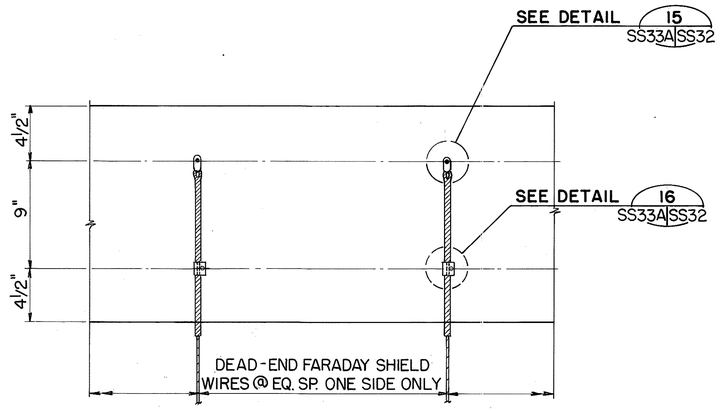

TYPE IV END CONNECTION - STRUT

OCCURS AT IB STA. 305+35.53
& OB STA. 305+40.11

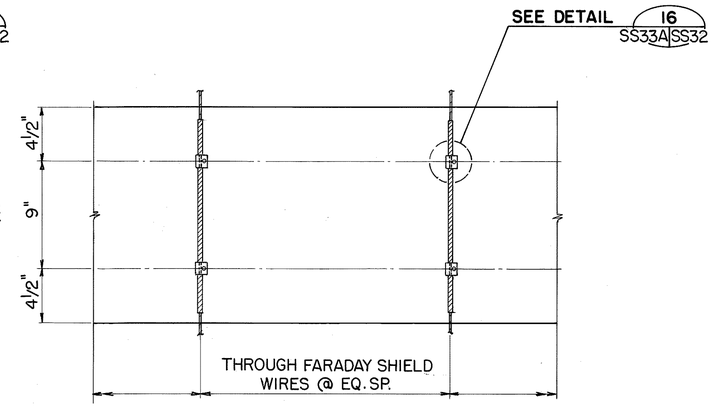

TYPE V THROUGH CONNECTION - STRUT

OCCURS AT IB STA. 279+45.53 & 287+85.53
& OB STA. 273+70.11

FARADAY SHIELD WIRE CONNECTION LAY-OUT

N. T. S.

5-25-93	ADDED FARADAY SHIELD WIRE CONNECTION TYPE IV & V PER DCN 66-008
DATE	REVISION

STATE OF HAWAII
DEPARTMENT OF TRANSPORTATION
HIGHWAYS DIVISION

MISCELLANEOUS DETAILS-5A

SUPPORT STRUCTURES
INTERSTATE ROUTE H-3
F.A.I. PROJ. NO. I-H3-1(66)

SCALE: NONE DATE: MAY 1993

SHEET NO. SS33A OF 36 SHEETS

HUI PANG CHEN
REGISTERED PROFESSIONAL ENGINEER
No. 3865-S
HAWAII, U.S.A.

THIS WORK WAS PREPARED BY ME OR UNDER MY SUPERVISION

Hui pang Chen

ORIGINAL PLAN
NOTE BOOK No.
SURVEY PLOTTED BY
DRAWN BY
TRACED BY
DESIGNED BY
QUANTITIES BY
CHECKED BY
DATE

395S-1

FED. ROAD DIST. NO.	STATE	FED. AID PROJ. NO.	FISCAL YEAR	SHEET NO.	TOTAL SHEETS
HAWAII	HAW.	I-H3-1(66)	1992	396	440

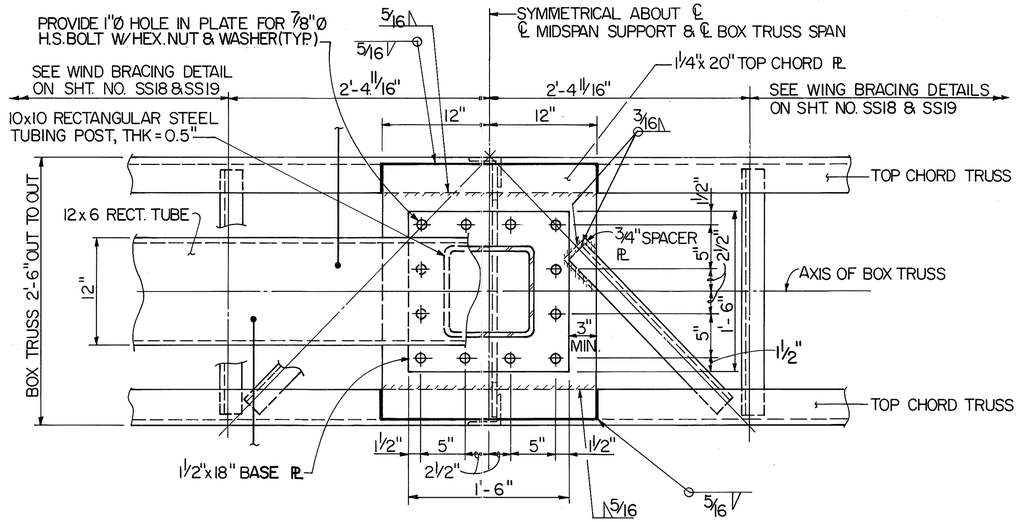

VIEW B (MIDSPAN SUPPORT)
SCALE: 1½"=1'-0" SS34 SS34
STA. 262+41.99 O.B.

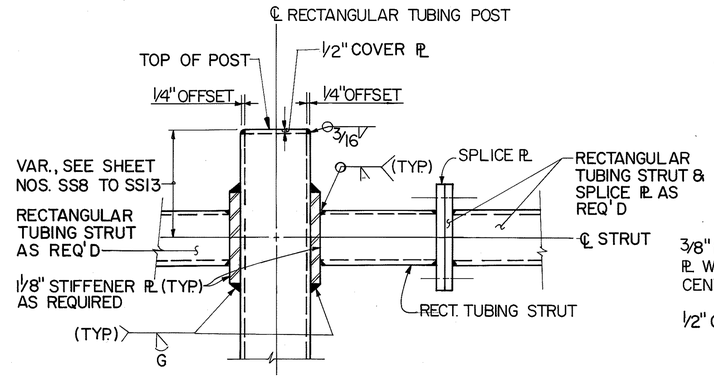

SECTION C
SCALE: 1½"=1'-0" SS30 SS34

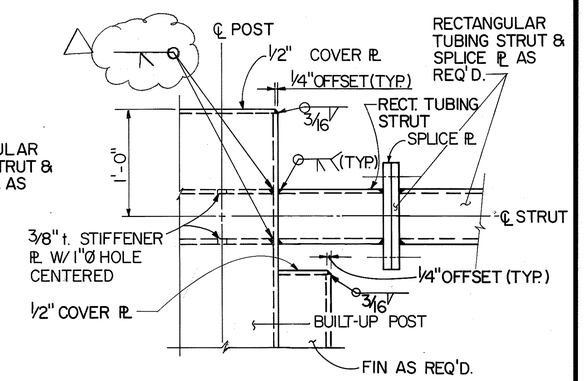

SECTION D
SCALE: 1½"=1'-0" SS30 SS34

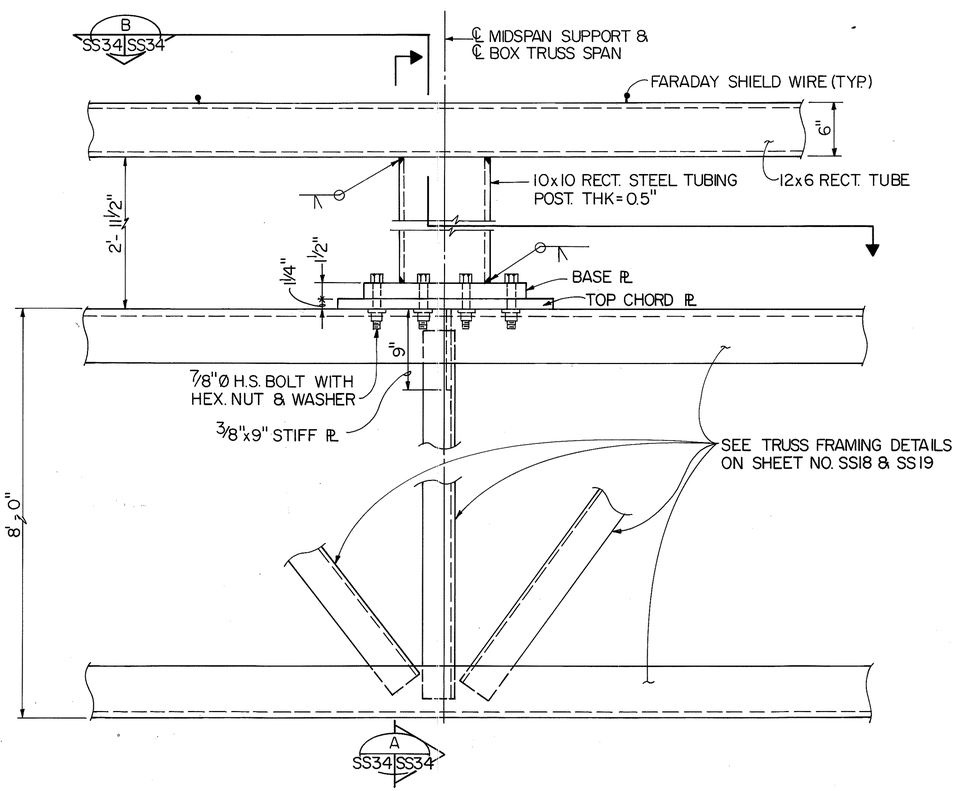

DETAIL 1 MIDSPAN SUPPORT ELEVATION
SCALE: 1½"=1'-0" SS11 SS34

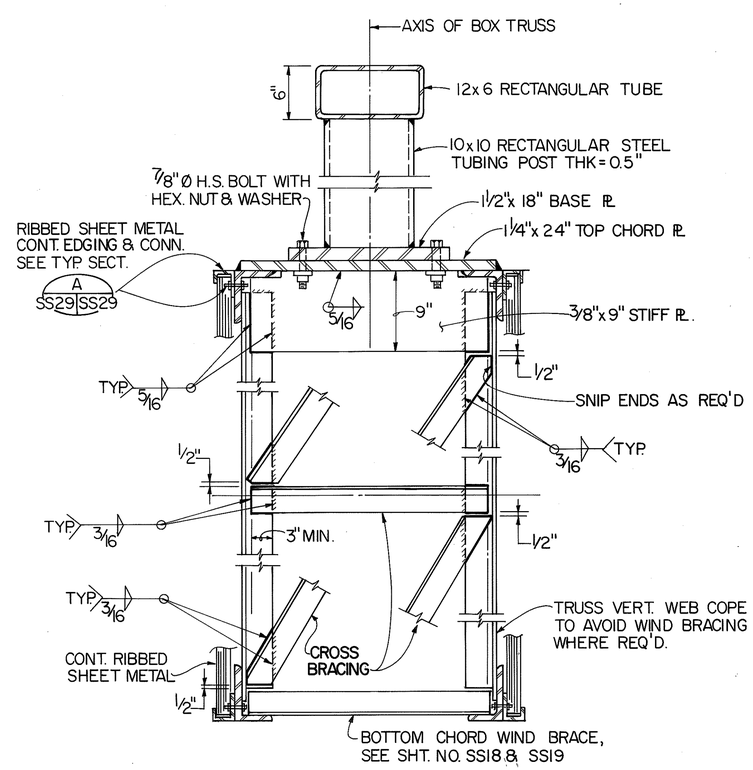

SECTION A
SCALE: 1½" =1'-0" SS34 SS34

HUI PANG CHEN
REGISTERED PROFESSIONAL ENGINEER
No. 3865-S
HAWAII, U.S.A.

THIS WORK WAS PREPARED BY ME OR UNDER MY SUPERVISION.
Hu pang Chen

DATE	REVISION
2/24/94	CLARIFY WELD PER DCN 66-036

STATE OF HAWAII
DEPARTMENT OF TRANSPORTATION
HIGHWAYS DIVISION

MISCELLANEOUS DETAILS-6

SUPPORT STRUCTURES
INTERSTATE ROUTE H-3
F.A.I. PROJ. NO. I-H3-1(66)

SCALE: AS SHOWN DATE: APR. 1992

SHEET NO. SS34 OF 36 SHEETS

SURVEY PLOTTED BY		DATE
DRAWN BY	D. TAKENO	1/96
TRACED BY	K. WADA	1/96
DESIGNED BY	S. LIM	3/92
QUANTITIES BY		1/96
CHECKED BY	H.P. CHEN	

ORIGINAL PLAN
NOTE BOOK
No.

FED. ROAD DIST. NO.	STATE	FED. AID PROJ. NO.	FISCAL YEAR	SHEET NO.	TOTAL SHEETS
HAWAII	HAW.	I-H3-1(66)	1992	397	440

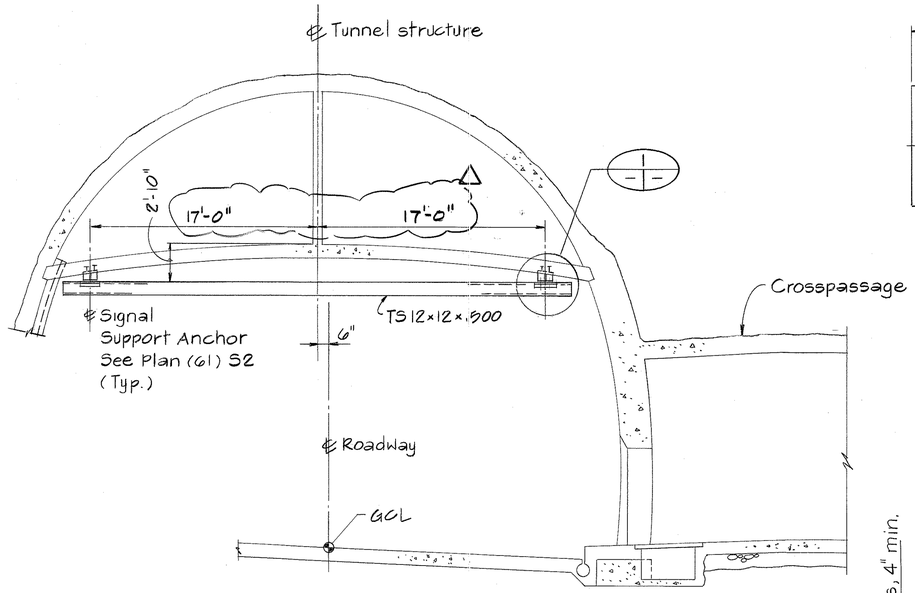

MONOTUBE SIGNAL SUPPORT

(1B SHOWN LOOKING EAST, 0B OPPOSITE HAND, TYP.)

Scale: 3/16" = 1'-0"

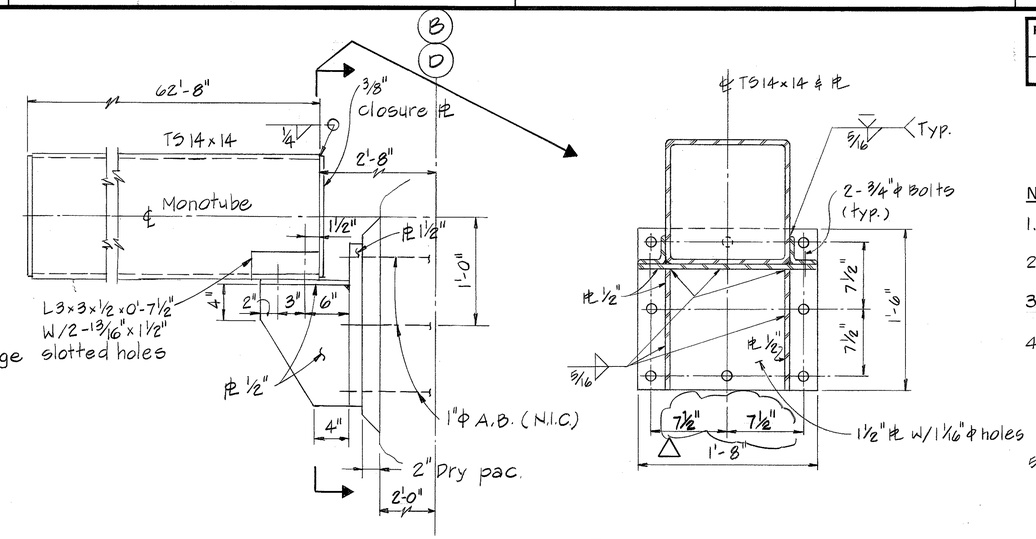

SIGNAL BRIDGE SUPPORT DETAIL (1 / SS36 SS35)

Scale: 1 1/2" = 1'-0"

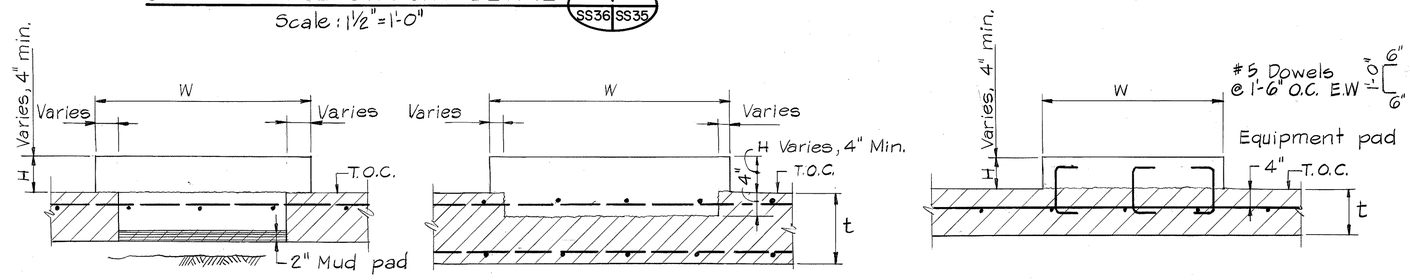

SLAB ON GRADE | **FLOOR SLAB t ≥ 1'-0"** | **FLOOR SLAB t < 1'-0"**

EQUIPMENT FOUNDATION

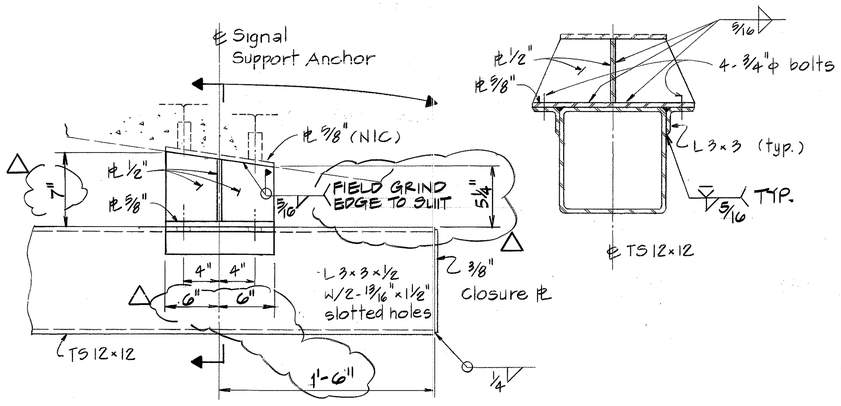

DETAIL 1 (N.T.S.)

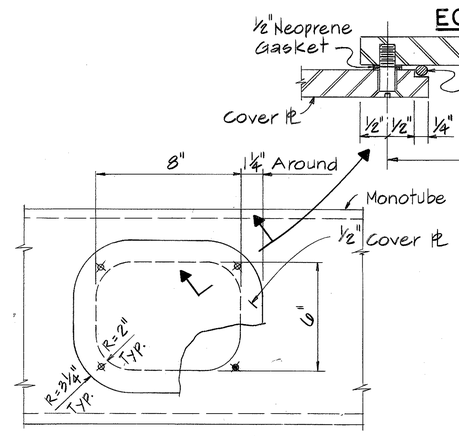

FRONT VIEW

DETAIL 1 (SS36 SS35) N.T.S.

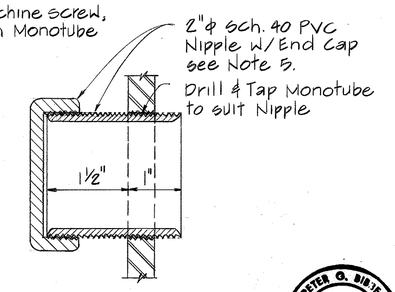

DETAIL 2 (SS36 SS35) N.T.S.

GRAPHIC SCALES
4' 0' 4' 8' 12'
3/16" = 1'-0"
1' 0' 1'
1 1/2" = 1'-0"

NOTES:

1. See Sht. No. S1 (61) or (64) structural notes.
2. Structural steel shall be ASTM A36 hotdip galvanized.
3. See Sht. No. S2 (61) or (64) for anchor bolt details.
4. See Mechanical & Electrical plans for equipment foundation plan. The details of the equipment foundation shall be coordinated with the equipment supplier and submitted for acceptance by the engineer prior to construction.
5. The Nipple and End Cap shall be installed with Teflon tape to assure water tightness.

DATE	REVISION
3/22/93	REVISED ANCHOR POINT LAYOUT DIMENSIONS & DETAILS PER DCN NO. 66-002

STATE OF HAWAII
DEPARTMENT OF TRANSPORTATION
HIGHWAYS DIVISION

MISCELLANEOUS DETAILS - 7

SUPPORT STRUCTURES
INTERSTATE ROUTE H-3
F.A.I. PROJ. NO. I-H3-1(66)

SCALE: AS NOTED DATE: APR 1992

SHEET NO. SS35 OF 36 SHEETS

PETER G. BIRKES REGISTERED PROFESSIONAL ENGINEER No. 6467-S HAWAII, U.S.A.

THIS WORK WAS PREPARED BY ME OR UNDER MY SUPERVISION

ORIGINAL PLAN		DATE
	SURVEY PLOTTED BY	
	DRAWN BY K. CHU	JUN 92
	TRACED BY	
	PLOTTED BY	
NOTE BOOK	DESIGNED BY M. S. OKAZAKI	JUN 90
	QUANTITIES BY	
No.	CHECKED BY M. S. LIU	JUL 92

FED. ROAD DIST. NO.	STATE	FED. AID PROJ. NO.	FISCAL YEAR	SHEET NO.	TOTAL SHEETS
HAWAII	HAW.	I-H3-1(66)	1992	398	440

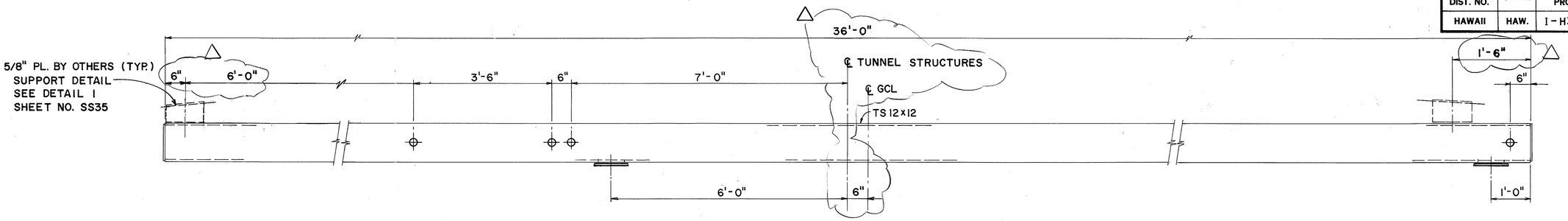

AT EVEN NUMBERED CROSSPASSAGE (10 REQ'D)

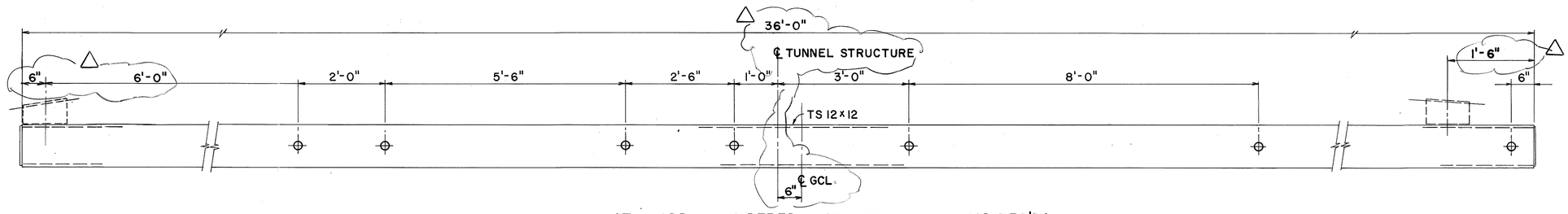

AT ODD NUMBERED CROSSPASSAGE (10 REQ'D)

MONOTUBE SIGNAL SUPPORT

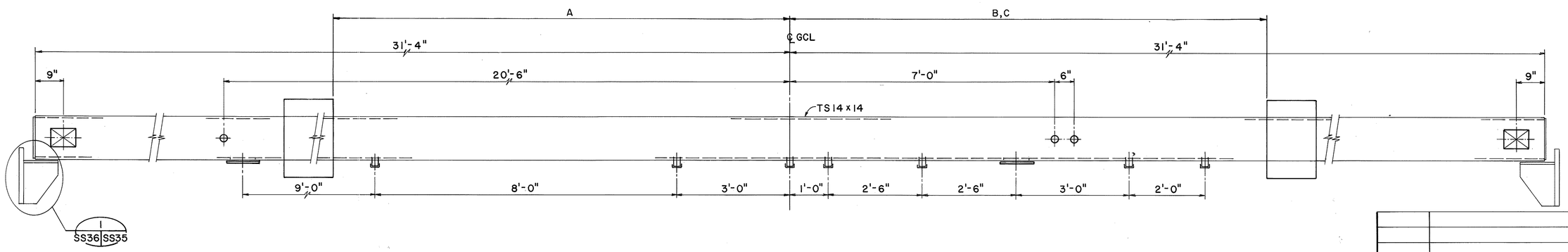

SIGNAL BRIDGE (4 REQ'D)

LOCATION	OFFSET			SIGN FACING			MOUNTING HEIGHT			REFERENCE SHEET NO.		
	A	B	C	A	B	C	A	B	C	A	B	C
IB STA. 604+60 (LOOKING AHEAD)	13'-0"	20'-0"	20'-0"	IB	IB	OB	18'-6"	17'-0"	17'-0"	TXI	TXI	TXI
OB STA. 602+50 (LOOKING BACK)	13'-0"	20'-0"	—	OB	IB	—	18'-6"	17'-0"	—	TXI	TXI	—
OB STA. 257+50 (LOOKING BACK)	—	20'-0"	—	—	IB	—	—	17'-0"	—	—	TX6	—

LEGEND

- 6"x8" HANDHOLE AT BOTH SIDES
- 6"x8" HANDHOLE AT BOTTOM SIDE
  } SEE 1 SS36 SS35
- 2" DIA. NIPPLE AT BOTH SIDES
- 2" DIA. NIPPLE AT BOTTOM SIDE
  } SEE 2 SS36 SS35
- FIXED MESSAGE SIGN

GRAPHIC SCALE
1' 0' 1' 2' 3'
3/4" = 1'-0"

PETER O. BIBIES REGISTERED PROFESSIONAL ENGINEER No. 8467-S HAWAII, U.S.A.

THIS WORK WAS PREPARED BY ME OR UNDER MY SUPERVISION

DATE	REVISION
3/22/93	REVISED ANCHOR POINT DIMENSIONS PER DCN NO. 66-002

STATE OF HAWAII
DEPARTMENT OF TRANSPORTATION
HIGHWAYS DIVISION

MISCELLANEOUS DETAILS-8

SUPPORT STRUCTURES
INTERSTATE ROUTE H-3
F.A.I. PROJ. NO. I-H3-1(66)

SCALE: 3/4" = 1'-0" DATE: APR 1992

SHEET NO. SS36 OF 36 SHEETS

SURVEY PLOTTED BY		DATE
DRAWN BY	F. Lau	Jul 92
TRACED BY		"
DESIGNED BY	M. G. Ostrands	Jul 92
QUANTITIES BY		"
CHECKED BY	M. G. Lum	Jul 92

ORIGINAL PLAN — NOTE BOOK — NO.