FED. ROAD DIST. NO.	STATE	FED. AID PROJ. NO.	FISCAL YEAR	SHEET NO.	TOTAL SHEETS
HAWAII	HAW.	I-H3-1(66)	1992	11	440

ABBREVIATIONS

ABBR	ABBREVIATION	IB	INBOUND
ABV	ABOVE	IE	INVERT ELEVATION
AC	AIR CONDITIONING UNIT	IN	INCHES
AD	ACCESS DOOR	KW	KILOWATT
AFF	ABOVE FINISH FLOOR	LBS	POUNDS
AH	AIR HANDLING UNIT	MECH	MECHANICAL
AP	ACCESS PANEL	ML	MATCH LINE
ARCH	ARCHITECTURAL	NC	NORMALLY CLOSED
ATM	ATMOSPHERE	NIC	NOT IN CONTRACT
BHP	BRAKE HORSEPOWER	NO	NORMALLY OPEN
BOD	BOTTOM OF DUCT	NTS	NOT TO SCALE
BTUH	BRITISH THERMAL UNITS PER HOUR	OA	OUTSIDE AIR
CFM	CUBIC FEET PER MINUTE	OB	OUTBOUND
CI	CAST IRON	OC	ON CENTER
CLG	CEILING	PD	PRESSURE DROP
℄	CENTERLINE	PL	PLATE
CONN	CONNECTION/CONNECT	POC	POINT OF CONNECTION
CONT	CONTINUATION	PSI	POUNDS PER SQUARE INCH
CP	CONTROL PANEL	PVC	POLYVINYL CHLORIDE
CU	CONDENSING UNIT	RA	RETURN AIR
dB	DECIBEL	RAD	RETURN AIR DAMPER
DB	DRY BULB	RF	RETURN FAN
DIA	DIAMETER	RM	ROOM
DIM	DIMENSION	RPM	REVOLUTIONS PER MINUTE
DL	DOOR LOUVER	SA	SUPPLY AIR
DN	DOWN	SAT	SOUND ATTENUATOR
DWG	DRAWING	SF	SUPPLY FAN
DX	DIRECT EXPANSION	SP	STATIC PRESSURE
EA	EXHAUST AIR	STD	STANDARD
EF	EXHAUST FAN	STRUCT	STRUCTURAL
ELEC	ELECTRICAL	STL	STEEL
ELEV	ELEVATION	SS	SERVICE SINK
EQUIP	EQUIPMENT	TEMP	TEMPERATURE
EXH	EXHAUST	TG	TRANSFER GRILL
F	DEGREES FAHRENHEIT	TP	TOTAL PRESSURE
FHC	FIRE HOSE CABINET	TYP	TYPICAL
FLR	FLOOR	V	VENT
FIN	FINISHED	VT	VENT TERMINATION
FT	FEET	VTR	VENT THROUGH ROOF
GA	GAUGE	WB	WET BULB
GALV	GALVANIZED	WG	WATER GAUGE
GPM	GALLONS PER MINUTE	W/O	WITHOUT
HP	HORSE POWER		
Hz	HERTZ		

SYMBOLS

- NECK / SIZE - CD / CFM / NO.- WAY — CEILING SUPPLY DIFFUSER
- SIZE-SR / CFM — WALL SUPPLY REGISTER
- SIZE-RR/ER / CFM — RETURN AIR/EXHAUST AIR REGISTER (RG/EG-RETURN AIR/EXHAUST AIR GRILLS)
- ELBOW WITH TURNING VANES
- FLEXIBLE CONNECTION
- ELECTRIC DUCT HEATER
- SUPPLY AIR DUCT SECTION
- RETURN AIR/EXHAUST AIR DUCT SECTION
- RECTANGULAR-ROUND TRANSITION
- AA — SOUND ATTENUATOR
- INTERNAL INSULATION
- EXTERNAL INSULATION
- AIR EXTRACTOR
- R — DUCT RISE IN DIRECTION OF AIR FLOW
- D — DUCT DROP IN DIRECTION OF AIR FLOW
- AD FD — FIRE DAMPER AND SLEEVE WITH ACCESS DOOR
- SD AD — SMOKE DAMPER WITH ACCESS DOOR
- BDD — BACKDRAFT DAMPER
- VD — MANUAL VOLUME DAMPER
- M — MOTOR OPERATED DAMPER (MOD)
- DL — DOOR LOUVER (DL) (SEE ARCH. DWGS. FOR SIZE)
- L — WALL/PARTITION LOUVER (SEE ARCH. DWGS. FOR SIZE)
- XXX CFM — SUPPLY AIR FLOW
- XXX CFM — RETURN/EXHAUST AIR FLOW
- T — THERMOSTAT
- H — HUMIDISTAT
- FAN, CENTRIFUGAL
- FAN, PROPELLER
- SRV — ROOF VENTILATOR, INTAKE
- ERV — ROOF VENTILATOR, EXHAUST
- ROOF VENTILATOR, LOUVERED
- XX X — EQUIPMENT IDENTIFICATION TAG

GENERAL NOTES

1. SYMBOLS AND ABBREVIATIONS SHOWN ON THIS SHEET INCLUDE ITEMS WHICH MAY NOT BE PRESENTLY PART OF THIS CONTRACT.

DATE	REVISION

JOHN M. GOO REGISTERED PROFESSIONAL ENGINEER No. 6508-M HAWAII, U.S.A.

THIS WORK WAS PREPARED BY ME OR UNDER MY SUPERVISION

STATE OF HAWAII
DEPARTMENT OF TRANSPORTATION
HIGHWAYS DIVISION

HVAC-LEGEND, SYMB., ABBR. & GEN. NOTES

STANDARDS

INTERSTATE ROUTE H-3
F.A.I. PROJ. NO. I-H3-1(66)

SCALE: NONE DATE: APR 1992

SHEET NO. M1 OF 28 SHEETS

		DATE
SURVEY PLOTTED BY		
DRAWN BY	CADD	5/19/89
TRACED BY	"	"
DESIGNED BY	D.E. DRYDEN	5/17/89
QUANTITIES BY	"	"
CHECKED BY	J.N. QUE	5/17/90

ORIGINAL PLAN — NOTE BOOK NO.

DUBO: CAD.PROJECT.2410.2410V031 M101

11

FED. ROAD DIST. NO.	STATE	FED. AID PROJ. NO.	FISCAL YEAR	SHEET NO.	TOTAL SHEETS
HAWAII	HAW.	I-H3-1(66)	1992	12	440

ABBREVIATIONS

ABBR	ABBREVIATION	OB	OUTBOUND
ABV	ABOVE	OC	ON CENTER
ASSY	ASSEMBLY	PDI	PLUMBING DRAINAGE INSTITUTE
ARCH	ARCHITECTURAL	PL	PLATE
BHP	BRAKE HORSE POWER	POC	POINT OF CONNECTION
BOP	BOTTOM OF PIPE	PSI	POUNDS PER SQUARE INCH
CI	CAST IRON	PVC	POLYVINYL CHLORIDE
CLG	CEILING	REQ'D	REQUIRED
℄	CENTERLINE	RM	ROOM
CONN	CONNECTION/CONNECT	RPM	REVOLUTIONS PER MINUTE
CONT	CONTINUATION	SPEC	SPECIFICATION
DET	DETAIL	STD	STANDARD
DIA	DIAMETER	STRUCT	STRUCTURAL
DN	DOWN	STL	STEEL
DWG	DRAWING	TEMP	TEMPERATURE
ELEC	ELECTRICAL	TP	TRAP PRIMER
ELEV	ELEVATOR	TYP	TYPICAL
F	DEGREES FAHRENHEIT	VB	VALVE BOX
FHC	FIRE HOSE CABINET	VS	VALVE STATION
FLEX	FLEXIBLE	VT	VENT TERMINATION
FLR	FLOOR	WH	WATER HEATER
FIN	FINISHED	FW	FIRE WATER
FP	FIRE PROTECTION	WSP	WET STAND PIPE
FT	FEET	FH	FIRE HYDRANT
GALV	GALVANIZED	CP	CROSSPASSAGE
GPM	GALLONS PER MINUTE	D.I.	DUCTILE IRON
HP	HORSE POWER	V	VENT (SANITARY)
HZ	HERTZ	VTR	VENT THRU ROOF
IB	INBOUND		
IE	INVERT ELEVATION		
IN	INCHES		
KW	KILOWATT		
MAX	MAXIMUM		
MECH	MECHANICAL		
MIN	MINIMUM		
NC	NORMALLY CLOSED		
NIC	NOT IN CONTRACT		
NO	NORMALLY OPEN		
NPT	NATIONAL PIPE THREAD		
NTS	NOT TO SCALE		

PIPING

FIRE PROTECTION AND DOMESTIC WATER

—CW—	DOMESTIC COLD WATER	—SD—	STORM DRAIN
—FW—	FIRE WATER	—V—	VENT
—WSP—	WET STANDPIPE	—S—	SANITARY SEWER
—TW—	TRUCK WASH	—DD—	DUCT DRAIN
—D—	DRAINAGE	—OD—	OVERFLOW DRAIN

FITTINGS

PLAN	PIPE UP	PIPE DOWN	
			ELBOW - 90° SHORT RADIUS
			ELBOW - 90° LONG RADIUS
			ELBOW - 45°
			TEE

SYMBOLS

SYMBOL	ABBR.	DESCRIPTION
		UNION
		FLANGED JOINT
	EJ	EXPANSION JOINT
		CAP ON END OF PIPE
		DIRECTION OF SLOPE
		THERMOMETER w/SEP. SOCKET WELL
		PRESSURE GAUGE w/PET COCK
		PUMP
		STRAINER
		REDUCER - ECCENTRIC DOWN
		REDUCER - CONCENTRIC
		REDUCER - ECCENTRIC UP
	FD	FLOOR DRAIN
	FS	FLOOR SINK
	RD	ROOF DRAIN
	OD	OVERFLOW DRAIN
	AD	AREA DRAIN
	FCO	FLOOR CLEANOUT
	GCO	GRADE CLEANOUT
	PLD	PLANTER DRAIN
	WCO	WALL CLEANOUT
	BFP	BACKFLOW PREVENTOR (INDICATE TYPE)
	AVB	ATMOSPHERIC VACUUM BREAKER
	GV	GATE VALVE
	GLV	GLOBE VALVE
	CV	CHECK VALVE
	HB	HOSE BIBB
	PSV	PRESSURE SAFETY VALVE
	BV	BUTTERFLY VALVE
		AIR RELIEF AND VACUUM RELIEF VALVE
	PRV	PRESSURE REGULATOR VALVE
	TPV	TRAP PRIMER VALVE
	WHA	WATER HAMMER ARRESTER, PDI AS SHOWN
XX / X		EQUIPMENT IDENTIFICATION TAG
	FDC FH	ROOF FIRE DEPARTMENT OUTLET CONNECTION FIRE HYDRANT

PLUMBING FIXTURES

SYMBOL	ABBR.	
	WC	WATER CLOSET
	UR	URINAL
	LAV	LAVATORY
	SS	SERVICE SINK
	BS	BATTERY SINK
	KS	KITCHEN SINK
	EWC	ELECTRIC WATER COOLER
ES	ES	EMERGENCY SHOWER & EYE-WASH

FIRE PROTECTION EQUIPMENT

E1	FIRE EXTINGUISHER - ABC
E2	FIRE EXTINGUISHER - HALON
FHC-S	FIRE HOSE CABINET - SURFACE MOUNTED
FHC-R	FIRE HOSE CABINET - RECESSED
	FIRE HOSE VALVE
COMB. FHC	COMBINATION FIRE HOSE CABINET

CONTROLS AND INSTRUMENTATION

FS	FLOW SWITCH
FE	FLOW ELEMENT
FQI	FLOW INDICATOR (TOTALIZER)
ZS	POSITION SWITCH
PSV	PRESSURE SAFETY VALVE
PS	PRESSURE SWITCH
HS / HOA	HAND SWITCH-HAND/OFF/AUTO
PI	PRESSURE INDICATOR
LALL	LEVEL ALARM-LOW LOW
LSL	LEVEL SWITCH-LOW
LSH	LEVEL SWITCH-HIGH
LAH	LEVEL ALARM-HIGH
IV	ISOLATION VALVE
LCP	LOCAL CONTROL PANEL

GENERAL NOTES

1. SYMBOLS AND ABBREVIATIONS SHOWN ON THIS SHEET INCLUDE ITEMS WHICH MAY NOT BE PRESENTLY PART OF THIS CONTRACT.
2. ALL DRAINAGE LINES SHALL BE AT 1% MINIMUM SLOPE UNLESS OTHERWISE NOTED
3. ALL SANITARY LINES SHALL BE AT 2% MINIMUM SLOPE UNLESS OTHERWISE NOTED.
4. FOR BACKGROUND INFORMATION SEE ARCHITECTURAL AND STRUCTURAL PLANS.

ORIGINAL PLAN	SURVEY PLOTTED BY
	DRAWN BY LADD DATE 5/27/89
	TRACED BY
NOTE BOOK	DESIGNED BY P.L.LALOUE DATE 5/24/89
	QUANTITIES BY
NO.	CHECKED BY J.N. QUE DATE 6/8/90

THIS WORK WAS PREPARED BY ME OR UNDER MY SUPERVISION

JOHN N. QUE — REGISTERED PROFESSIONAL ENGINEER — No. 6503-M — HAWAII, U.S.A.

DATE	REVISION

STATE OF HAWAII
DEPARTMENT OF TRANSPORTATION
HIGHWAYS DIVISION

PLUMBING-LEGEND. SYMB., ABBR. & GEN. NOTES

STANDARDS

INTERSTATE ROUTE H-3

F.A.I. PROJ. NO. I-H3-1(66)

SCALE: NONE DATE: APR 1992

SHEET NO. M2 OF 28 SHEETS

FED. ROAD DIST. NO.	STATE	FED. AID PROJ. NO.	FISCAL YEAR	SHEET NO.	TOTAL SHEETS
HAWAII	HAW.	I-H3-1(66)	1992	13	440

BUILDING AIR CONDITIONING UNIT SCHEDULE

ABBREVIATIONS:
ACFM ACTUAL CUBIC FEET PER MINUTE
APD AIR PRESSURE DROP
AR ARRANGEMENT
ATM ATMOSPHERIC
BI BACKWARD INCLINED
DIM DIMENSION
DWDI DOUBLE WIDTH, DOUBLE INLET
DX DIRECT EXPANSION
EAT ENTERING AIR TEMPERATURE
EFF EFFICIENCY
ESP EXTERNAL STATIC PRESSURE
FDB °F DRY BULB
FPM FEET PER MINUTE
FWB °F WET BULB
HP HORSEPOWER
LAT LEAVING AIR TEMPERATURE
MAX MAXIMUM
MBH 1000 BTU/HR
IN INCHES
OV OUTLET VELOCITY
PRESS PRESSURE
RPM REVOLUTIONS PER MINUTE
SP STATIC PRESSURE
TOT TOTAL
VEL VELOCITY

EQUIPMENT NO.	AREA SERVED	DRAW-THRU	MULTI-ZONE	AR: HORIZONTAL	AR: VERTICAL	AR: INVERT	SECTIONS: COIL: CH W	COIL: HW	COIL: DX	COIL: ELECTRIC	FILTER: FLAT	FILTER: ANGLE	FILTER: COMBINATION	MIXING BOX	FAN: WHEEL: NUMBER	WHEEL: DIAMETER (INCHES)	WHEEL: TYPE	WHEEL: RPM	PERFORMANCE: AIR CAPACITY ACFM	PERFORMANCE: OUTLET VEL. FPM	PERFORMANCE: STATIC PRESS. IN. ESP	PERFORMANCE: STATIC PRESS. IN. TOT	MOTOR: NAME PLATE HP	MOTOR: RPM	MOTOR: RATED VOLTS/PH/HZ	HEAT TRANSFER MBH	COOLING COIL (FOR HEATING COIL SEE SCHEDULE THIS SHT.): MAX. FACE VEL. FPM / ACFM	AIR SIDE: EAT FDB	AIR SIDE: EAT FWB	AIR SIDE: LAT FDB	AIR SIDE: LAT FWB	AIR SIDE: MAX APD IN WG	REFRIG. SIDE: TYPE	REFRIG. SIDE: SUCTION °F	REFRIG. SIDE: LIQUID °F	DIM.: FIN WIDTH IN	DIM.: FIN LENGTH IN	NO. ROWS / FINS PER FOOT	FILTER: TYPE	FILTER: MAX FACE VEL FPM	FILTER: NO. AND SIZE	FILTER: ATM DUST SPOT EFF (%)	ISOLATORS: STATIC DEFLECTION IN	ISOLATORS: SUPPORT FROM	WEIGHT LBS	REMARKS
AC-10	CONTROL BUILDING	●	—	●	—	—	—	—	●	●	●	—	—	●	1	12.25	DWDI BI	2665	2800	1800	—	3.5	3	1800	460/3/60	132.0	420 / 2800	80.8	67.8	53.4	52.4	0.83	22	45	—	—	—	8 / 96	DISPOSABLE	500	2-16x25x2 2-16x20x2	77	ONE	ROOF	1700	—
AC-11	HAIKU IB O&M OFFICE	●	—	—	●	—	—	—	●	—	●			●	1				4000			1.0	2		460/3/60	92.0	420 / 4000	80.8	67.8	53.4	52.4	0.83	22	45	—	—	—		DISPOSABLE	500		77	—	—	450	

CONDENSING UNIT SCHEDULE

ABBREVIATIONS:
CAP. CAPACITY
HP HORSEPOWER
RPM REVOLUTIONS PER MINUTE
QTY QUANTITY
REQD REQUIRED

EQUIPMENT NO.	UNIT SERVED	COOLING CAP.	CONDENSER: FAN: QTY REQD	CONDENSER: FAN: RPM	CONDENSER: FAN MOTOR: HP	CONDENSER: FAN MOTOR: VOLTS	CONDENSER: FAN MOTOR: PHASE	CONDENSER: FAN MOTOR: HERTZ	COMPRESSOR: QTY REQD	COMPRESSOR: HP / RPM	COMPRESSOR: VOLTS	COMPRESSOR: PHASE	COMPRESSOR: HERTZ	WEIGHT LBS
CU-1	AC-1		2	1075	1/4	460	3	60	—	— / —	—	—	—	170
CU-2	AC-2		2	1075	1/4	460	3	60	—	— / —	—	—	—	170
CU-3	AC-3		2	1075	1/2	460	3	60	—	— / —	—	—	—	300
CU-4	AC-4		2	1075	1/2	460	3	60	—	— / —	—	—	—	300
CU-5	AC-10		2	1100	1	460	3	60	ONE	10 / 1750	460	3	60	1040
CU-6	AC-11		2		1/2	460	3	60	ONE	15	460	3	60	700

ELECTRIC HEATING COIL

ABBREVIATIONS:
ACFM ACTUAL CUBIC FEET PER MINUTE
APD AIR PRESSURE DROP
EAT ENTERING AIR TEMPERATURE
FPM FEET PER MINUTE
LAT LEAVING AIR TEMPERATURE
MAX MAXIMUM
VEL VELOCITY

EQUIPMENT NO.	UNIT SERVED	HEAT TRANSFER KW	FACE VEL FPM / ACFM	AIR SIDE: EAT °F	AIR SIDE: LAT °F	AIR SIDE: MAX APD IN WG	VOLTS	PHASE	HERTZ	REMARKS
EH-1	AC-10	12	466 / 2800	67	80	0.05	460	3	60	—
EH-2	AC-11	15	466 / 4000	67	80	0.20	460	3	60	—

NOTES:

1. STATIC PRESSURE IS IN INCHES WATER COLUMN.
2. ALL FAN HOUSINGS SHALL BE PROTECTED INTERNALLY AND EXTERNALLY WITH CORROSION-RESISTANT FACTORY-APPLIED COATING AS SPECIFIED.

FOR DETAIL AS-BUILT INFORMATION REFER TO CONSTRUCTION SUBMITTALS

DATE	REVISION
7/22/92	ADDENDUM 1 - ADDED AC-11, CU-6, EH-2

ORIGINAL PLAN
SURVEY PLOTTED BY
DRAWN BY D. E. DRYDEN 9/08/89
TRACED BY " "
DESIGNED BY A. H. PORTIER 7/11/89
NOTE BOOK QUANTITIES BY " "
CHECKED BY J. N. QUE 6/7/90
No.

JOHN N. QUE REGISTERED PROFESSIONAL ENGINEER No. 6503-M HAWAII, U.S.A.

THIS WORK WAS PREPARED BY ME OR UNDER MY SUPERVISION

STATE OF HAWAII
DEPARTMENT OF TRANSPORTATION
HIGHWAYS DIVISION

HVAC EQUIPMENT SCHEDULES 1

STANDARDS

INTERSTATE ROUTE H-3

F.A.I. PROJ. NO. I-H3-1(66)

SCALE: NONE DATE: APR 1992

SHEET NO. M3 OF 28 SHEETS

ADD. 13

FED. ROAD DIST. NO.	STATE	FED. AID PROJ. NO.	FISCAL YEAR	SHEET NO.	TOTAL SHEETS
HAWAII	HAW.	I-H3-1(66)	1992	14	440

ENVIRONMENTAL AIR CONDITIONING UNIT SCHEDULE

ABBREVIATIONS:

ATM ATMOSPHERIC
CFM CUBIC FEET PER MINUTE
DX DIRECT EXPANSION
EAT ENTERING AIR TEMPERATURE
EXT EXTERNAL
FDB °F DRY BULB
FPM FEET PER MINUTE
FWB °F WET BULB
LAT LEAVING AIR TEMPERATURE
SP STATIC PRESSURE
VEL VELOCITY
QTY QUANTITY
REQD REQUIRED

EQUIPMENT NO.	AREA SERVED	TOTAL COOLING CAPACITY TONS	FAN			COIL							HEATER		HUMIDIFIER		FILTER				RATED VOLTS/PH/HZ	WEIGHT LBS	REMARKS
			AIR FLOW CFM	EXT SP IN. WG	MOTOR HP	TYPE	EAT		LAT		—	—	QTY REQD	KW	KW	LBS. VAPOR PER HR.	TYPE	MAX. FACE VEL. FPM	NO. AND SIZE	ATM. DUST SPOT EFF.			
							FDB	FWB	FDB	FWB													
AC-1	CONTROL CENTER	3	1650	0.5	1-3/4	DX	72	60	52	50	—	—	ONE	6	2.8	8	DISPOSABLE	300	2-16x25x2	50%	460/3/60	625	DOWNFLOW
AC-2	CONTROL CENTER	3	1650	0.5	1-3/4	DX	72	60	52	50	—	—	ONE	6	2.8	8	DISPOSABLE	300	2-16x25x2	50%	460/3/60	625	DOWNFLOW
AC-3	SYSTEMS EQUIPMENT ROOM	8	4400	0.5	2-1	DX	72	60	52	50	—	—	2	6	4	12½	DISPOSABLE	300	4-16x25x2	50%	460/3/60	1270	UPFLOW
AC-4	SYSTEMS EQUIPMENT ROOM	8	4400	0.5	2-1	DX	72	60	52	50	—	—	2	6	4	12½	DISPOSABLE	300	4-16x25x2	50%	460/3/60	1270	UPFLOW

NOTES:

1. DELETED.
2. ALL FAN HOUSINGS SHALL BE PROTECTED INTERNALLY AND EXTERNALLY WITH CORROSION-RESISTANT, FACTORY-APPLIED COATING AS SPECIFIED.
3. STATIC PRESSURE IS IN INCHES WATER COLUMN.

ORIGINAL PLAN		DATE
	SURVEY PLOTTED BY	
	DRAWN BY D. E. DRYDEN	9/07/89
NOTE BOOK	TRACED BY	
	DESIGNED BY A. H. PORTIER	7/11/89
	QUANTITIES BY	
No.	CHECKED BY J. N. QUE	6/07/90

THIS WORK WAS PREPARED BY ME OR UNDER MY SUPERVISION

JOHN N. QUE REGISTERED PROFESSIONAL ENGINEER No. 6503-M HAWAII, U.S.A.

DATE	REVISION
3/3/94	DELETED THROUGH-WALL SCHEDULE
	AND NOTE 1 PER DCN 66-037

STATE OF HAWAII
DEPARTMENT OF TRANSPORTATION
HIGHWAYS DIVISION

HVAC-EQUIPMENT SCHEDULES 2

STANDARDS

INTERSTATE ROUTE H-3

F.A.I. PROJ. NO. I-H3-1(66)

SCALE: NONE DATE: APR 1992

SHEET NO. M4 OF 28 SHEETS

FED. ROAD DIST. NO.	STATE	FED. AID PROJ. NO.	FISCAL YEAR	SHEET NO.	TOTAL SHEETS
HAWAII	HAW.	I-H3-1(66)	1992	15	440

FAN SCHEDULE

EQUIPMENT NO.	SERVICE	ARRANGEMENT	CLASS	DRIVE	WHEEL DIAMETER (INCHES)	WHEEL TYPE	WHEEL RPM	PERFORMANCE AIR CAPACITY ACFM	PERFORMANCE TIP SPEED FPM	PERFORMANCE STATIC H_2O PRESS. IN.	MOTOR NAME PLATE HP	MOTOR RPM	MOTOR VOLTS	MOTOR PHASE	MOTOR HERTZ	ISOLATOR BASE TYPE	ISOLATOR BASE STATIC DEFLEC. IN.	REMARKS
EF-1	NOT USED																	
EF-2	CONTROL BUILDING – TOILET RMS. AND JANITOR'S CLOSET	-	-	BELT	8.25	CENTRIFUGAL	1160	550	2505	0.375	1/4	1800	115	1	60			UTILITY FAN
EF-3	CONTROL BUILDING ELECTRICAL/MECHANICAL SHOP			BELT	8.25	CENTRIFUGAL	1160	800	2505	0.375	1/4	1800	115	1	60			UTILITY FAN
EF-4	CONTROL BUILDING BATTERY ROOM	-	-	BELT	6.75	CENTRIFUGAL	1180	250	2085	0.375	1/8	1800	115	1	60			UTILITY FAN
EF-5	CONTROL BUILDING ELEVATOR MACHINE ROOM	-	-	BELT	6.75	CENTRIFUGAL	1180	130	2085	0.375	1/8	1800	115	1	60			UTILITY FAN
EF-6	CONTROL BUILDING – CONTROL CENTER & SYSTEMS EQUIPMENT ROOM CLEAN AGENT AUTOMATIC FIRE SUPPRESSION SYSTEM EXHAUST	-	-	BELT	12.25	CENTRIFUGAL	613	1400	1965	0.375	1/3	1800	115	1	60			UTILITY FAN
EF-7	CONTROL BUILDING UPS	-	-	BELT	9.75	CENTRIFUGAL	830	800	2120	0.375	1/4	1800	115	1	60			UTILITY FAN
EF-8	NOT USED																	
EF-9	HALAWA OB TOILET ROOM – LEVEL 2	-	-	BELT	6.25	CENTRIFUGAL	1220	350	2010	0.375	1/8	1800	115	1	60			CEILING FAN
EF-10	DELETED																	
EF-11	HALAWA IB PUMP ROOM – LEVEL 2	-	-	BELT	8.0	CENTRIFUGAL	1125	890	2360	0.375	1/4	1800	115	1	60			CABINET FAN
EF-12	HALAWA IB TOILET ROOM – LEVEL 2	-	-	BELT	5.25	CENTRIFUGAL	1220	170	1680	0.25	1/25	1800	115	1	60			CEILING FAN
EF-13	DELETED																	
EF-14	HAIKU OB TOILET ROOM – LEVEL A	-	-	BELT	5.25	CENTRIFUGAL	1220	170	1680	0.25	1/25	1800	115	1	60			CEILING FAN
EF-15	DELETED																	
EF-16	DELETED																	
EF-17	HAIKU OB PUMP ROOM – LEVEL A	-	-	BELT	8.0	CENTRIFUGAL	1125	890	2360	0.375	1/4	1800	115	1	60			CABINET FAN
EF-18	HAIKU OB STORAGE ROOM – LEVEL A	-	-	BELT	7.30	CENTRIFUGAL	1245	660	2380	0.375	1/4	1800	115	1	60			IN LINE FAN
EF-19	HAIKU IB TOILET ROOM – LEVEL A	-	-	BELT	5.25	CENTRIFUGAL	1515	270	2080	0.25	1/8	1800	115	1	60			CEILING FAN
EF-20	DELETED																	
EF-21	DELETED																	
EF-22	HAIKU IB STORAGE ROOM – LEVEL A	-	-	BELT	7.30	CENTRIFUGAL	1245	660	2380	0.375	1/4	1800	115	1	60			IN LINE FAN
EF-35,36,37	HAIKU IB GARAGE	-	-	BELT	9.75	CENTRIFUGAL	830	800	2120	0.375	1/4	1800	115	1	60			ROOF FAN
SF-1,2,3,4	HALAWA OB, IB - HAIKU OB, IB MCC ROOM VENTILATION	-	-	BELT	36.0	PROPELLER	—	10,000	—	ATMOS	1	—	460	3	60			WALL FAN W/MANUAL BACKDRAFT DAMPER
AH-3	HALAWA OB MCC, SWITCHGEAR ROOM AND LEVEL 4	-	-	BELT	22.25	CENTRIFUGAL	530	9850	3110	1.5	5	1800	460	3	60			CABINET FAN
AH-4	HALAWA IB MCC, SWITCHGEAR ROOM AND LEVEL 4	-	-	BELT	22.25	CENTRIFUGAL	535	10150	3115	1.5	5	1800	460	3	60			CABINET FAN
AH-5	HAIKU OB MCC, SWITCHGEAR ROOM AND LEVEL 4	-	-	BELT	22.25	CENTRIFUGAL	530	8900	3075	1.5	5	1800	460	3	60			CABINET FAN
AH-6	HAIKU IB MCC, SWITCHGEAR ROOM AND LEVEL 4	-	-	BELT	22.25	CENTRIFUGAL	530	9100	3080	1.5	5	1800	460	3	60			CABINET FAN
EF-23	CROSSPASSAGE NO. 1 ATS AND TRANSFORMER ROOM	-	-	BELT	18.25	CENTRIFUGAL	1394	1800	—	0.25	1/2	1527	115	1	60			IN LINE FAN
EF-24	CROSSPASSAGE NO. 3 ATS AND TRANSFORMER ROOM	-	-	BELT	18.25	CENTRIFUGAL	1394	1800	—	0.25	1/2	1527	115	1	60			IN LINE FAN
EF-25	CROSSPASSAGE NO. 5 ATS AND TRANSFORMER ROOM	-	-	BELT	18.25	CENTRIFUGAL	1394	1800	—	0.25	1/2	1527	115	1	60			IN LINE FAN
EF-26	CROSSPASSAGE NO. 7 ATS AND TRANSFORMER ROOM	-	-	BELT	18.25	CENTRIFUGAL	1394	1800	—	0.25	1/2	1527	115	1	60			IN LINE FAN
EF-27	CROSSPASSAGE NO. 9 ATS AND TRANSFORMER ROOM	-	-	BELT	18.25	CENTRIFUGAL	1394	1800	—	0.25	1/2	1527	115	1	60			IN LINE FAN
EF-28,-29,-30	CONTROL BUILDING GARAGE	-	-	BELT	9.75	CENTRIFUGAL	830	800	2120	0.375	1/4	1800	115	1	60			ROOF FAN
EF-31,-32,-33,-34	CONTROL BUILDING EMERGENCY GENERATOR ROOM	-	-	BELT	33.0	CENTRIFUGAL	200	8000	1730	0.375	2	1800	460	3	60			ROOF FAN
EF-38,39,40,-41	HAIKU IB SHOP	-	-	BELT	9.75	CENTRIFUGAL	930	900	2385	0.375	1/4	1800	115	1	60			ROOF FAN
EF-42	HAIKU IB TOILET/SHOWER	-	-	BELT	9.75	CENTRIFUGAL	830	800	2120	0.375	1/4	1800	115	1	60			ROOF FAN

NOTES:

1. ADJUSTABLE MOTOR SHEAVE IF MOTOR IS 10 HP OR LESS. RAIL VIBRATION BASE WITH SLIDING MOTOR MOUNT.
2. BATTERY ROOM EXHAUST FAN (EF-4) SHALL BE SPARK PROOF.
3. ALL FAN HOUSINGS SHALL BE PROTECTED INTERNALLY AND EXTERNALLY WITH CORROSION-RESISTANT FACTORY-APPLIED COATING AS SPECIFIED.

ORIGINAL PLAN		DATE
	SURVEY PLOTTED BY	
	DRAWN BY D. E. DRYDEN	9/06/89
	TRACED BY	
NOTE BOOK	DESIGNED BY A. H. PORTIER	7/19/89
	QUANTITIES BY	
No.	CHECKED BY J. N. QUE	6/07/90

DATE	REVISION
9/15/94	DELETED EF-10, EF-13, EF-15, EF-16, EF-20 AND EF-21 PER DCN 66-052
3/7/94	ADDED SF-1,2,3,4 PER DCN 66-039
3/3/94	REVISED EF-23,24,25,26,27 DATA PER DCN 66-037
1/25/94	REV. EF-6 SERVICE DESCRIPTION PER DCN 66-034
1/22/92	ADDENDUM 1 - ADDED EF-35 THRU 42

JOHN N. QUE
REGISTERED PROFESSIONAL ENGINEER
No. 6503-M
HAWAII, U.S.A.

THIS WORK WAS PREPARED BY ME OR UNDER MY SUPERVISION

STATE OF HAWAII
DEPARTMENT OF TRANSPORTATION
HIGHWAYS DIVISION

HVAC – EQUIPMENT
SCHEDULES 3
STANDARDS

INTERSTATE ROUTE H-3
F.A.I. PROJ. NO. I-H3-1(66)

SCALE: NONE DATE: APR 1992

SHEET NO. M5 OF 28 SHEETS

ADD. 15

FED. ROAD DIST. NO.	STATE	FED. AID PROJ. NO.	FISCAL YEAR	SHEET NO.	TOTAL SHEETS
HAWAII	HAW.	I-H3-1(66)	1992	16	440

AIR DISTRIBUTION DEVICE SCHEDULE

EQUIP.	DESCRIPTION	REMARKS		EQUIP.	DESCRIPTION	REMARKS	
CSD-1	CEILING DIFFUSER	FOR EXPOSED CEILING	CEILING DIFFUSER W/ OPPOSED BLADE DAMPER, LOUVERED FACE - FIXED LOUVERS SIZE 24" x 24" FLOW PATTERN AS INDICATED NECK SIZE AS INDICATED	CRR-1	CEILING RETURN REGISTER	EXPOSED CEILING	CEILING RETURN GRILLE W/ OPPOSED BLADE DAMPER, LOUVERED FACE FIXED LOUVERS SIZE 24" x 24" DUCT SIZE AS INDICATED
CSD-2	CEILING DIFFUSER	FOR SUSPENDED CEILING	PERFORATED CEILING DIFFUSER W/ OPPOSED BLADE DAMPER, FLUSH FACE MODULE SIZE 24" x 24" NECK SIZE AS INDICATED	CRR-2	CEILING RETURN REGISTER	SUSPENDED CEILING	PERFORATED RETURN W/ OPPOSED BLADE DAMPER, FLUSH FACE MODULE SIZE 24" x 24" NECK SIZE AS INDICATED
WSR-1	SIDEWALL DIFFUSER	TYPE DOUBLE DEFLECTION	FRONT BLADES // TO LONG DIMENSION REAR BLADES // TO SHORT DIMENSION ALL BLADES INDIVIDUALLY ADJUSTABLE 3/4" BLADE SPACING DUCT SIZE AS INDICATED	CEG-1	CEILING EXHAUST GRILLE	EXPOSED CEILING	CEILING RETURN GRILLE W/ OPPOSED BLADE DAMPER, LOUVERED FACE FIXED DEFLECTION - 1/2" SPACING SIZE 24" x 24" DUCT SIZE AS INDICATED
DSR-1	DUCT SUPPLY REGISTER	TYPE DOUBLE DEFLECTION	FRONT BLADES // TO LONG DIMENSION REAR BLADES // TO SHORT DIMENSION ALL BLADES INDIVIDUALLY ADJUSTABLE 3/4" BLADE SPACING DUCT SIZE AS INDICATED	WRR-1	WALL RETURN REGISTER	TYPE ZERO FIXED DEFLECTION	ONE SET OF FIXED BLADES // TO LONG DIMENSION, 1/2" BLADE SPACING OPPOSED BLADE DAMPER DUCT SIZE AS INDICATED
DRR-1	DUCT RETURN REGISTER	TYPE ZERO FIXED DEFLECTION	ONE SET OF BLADES // TO LONG DIMENSION, 1/2" BLADE SPACING OPPOSED BLADE DAMPER DUCT SIZE AS INDICATED	CSD-3	CEILING DIFFUSER	FOR GYPSUM BOARD CEILING	PERFORATED CEILING DIFFUSER W/ OPPOSED BLADE DAMPER, FLUSH FACE MODULE SIZE 24" x 24" FLOW PATTERN AS INDICATED NECK SIZE AS INDICATED
FSR-1	FLOOR SUPPLY REGISTER	TYPE FIXED GRID	EGGCRATE RETURN GRILLE 1/2" x 1/2" x 1" GRID DUCT SIZE AS INDICATED	CRR-3	CEILING RETURN REGISTER	GYPSUM BOARD CEILING	PERFORATED RETURN W/ OPPOSED BLADE DAMPER, FLUSH FACE MODULE SIZE 24" x 24" NECK SIZE AS INDICATED

ORIGINAL PLAN		DATE
	SURVEY PLOTTED BY	
	DRAWN BY B. BUNYI	11/22/89
NOTE BOOK	TRACED BY	
	DESIGNED BY A.H. PORTIER	11/13/89
	QUANTITIES BY	
NO.	CHECKED BY J.N. QUE	5/05/90

JOHN N. QUE
REGISTERED PROFESSIONAL ENGINEER
No. 6603-M
HAWAII, U.S.A.

THIS WORK WAS PREPARED BY ME OR UNDER MY SUPERVISION

DATE	REVISION

STATE OF HAWAII
DEPARTMENT OF TRANSPORTATION
HIGHWAYS DIVISION

HVAC EQUIPMENT SCHEDULES 4

STANDARDS

INTERSTATE ROUTE H-3

F.A.I. PROJ. NO. I-H3-1(66)

SCALE: NONE DATE: APR 1992

SHEET NO. M6 OF 28 SHEETS

2410V162 2410: V162 MS0076.FGB;1 29SEP89-15.39.50

FED. ROAD DIST. NO.	STATE	FED. AID PROJ. NO.	FISCAL YEAR	SHEET NO.	TOTAL SHEETS
HAWAII	HAW.	I-H3-1(66)	1992	17	440

PUMP SCHEDULE

ABBREVIATIONS: EFF - MINIMUM ACCEPTABLE EFFICIENCY, TDH - TOTAL DYNAMIC HEAD

NOTE: HEAD IN FEET OF PUMPED FLUID

EQUIPMENT NUMBER	SERVICE	SUCTION RATINGS						MOTOR							TEMP		FLUID PUMPED			OTHER TEMP		CONNECTIONS						TYPE									REMARKS
		NET POS FT	SUC LIFT FT	FLOW, GPM	TDH ft.	MIN. EF., %	POWER REQ'D, BHP	NAME PLATE, HP	RPM	VOLTS	PHASE	HERTZ	INDOORS	OUTDOORS	MIN. °F	MAX °F	WATER	FLUID	SPECIFIC GRAVITY	MIN. °F	MAX °F	FLANGED	SCREWED	SWEAT	RATING	CPSI			DUPLEX SUBMERGE	STAGES	HORIZONTAL	VERTICAL	SPLIT CASE	END SECTION	CLOSE COUPLE	GEAR TYPE		
FP-MN01	FIRE PROTECTION	—	—	1000	215	—	—	100	1,760	460	3	60	•	—	50	104	•	—	1.0	40	85	•	—	—	—	—			—	1	•	—	•	—	—	—			HALAWA PORTAL BUILDING – IB
FP-MN02	FIRE PROTECTION	—	—	1000	215	—	—	100	1,760	460	3	60	•	—	50	104	•	—	1.0	40	85	•	—	—	—	—			—	1	•	—	•	—	—	—			HALAWA PORTAL BUILDING—IB
FP-MN03 JOCKEY PUMP	FIRE PROTECTION	—	—	35	215	—	—	3	1,760	460	3	60	•	—	50	104	•	—	1.0	40	85	—	•	—	—	—			—	5	—	—	—	—	—	—			HALAWA PORTAL BUILDING—IB
FP-MQ01	FIRE PROTECTION	—	—	1000	466	—	—	200	1,760	460	3	60	•	—	50	104	•	—	1.0	40	85	•	—	—	—	—			—	1	•	—	•	—	—	—			HAIKU PORTAL BUILDING—OB
FP-MQ02	FIRE PROTECTION	—	—	1000	466	—	—	200	1,760	460	3	60	•	—	50	104	•	—	1.0	40	85	•	—	—	—	—			—	1	•	—	•	—	—	—			HAIKU PORTAL BUILDING—OB
MP-1	MAKE-UP WATER (WELL PUMP)	—	—	100	1050	—	—	65	1,760	460	3	60	—	•	50	104	•	—	1.0	40	85	•	—	—	—	—			—	—	—	•	—	•	—	—			HALAWA APPROACH
MP-2A MP-2B	DOMESTIC WATER BOOSTER PUMP	—	—	40	107	—	—	1½	3,500	460	3	60	•	—	50	104	•	—	1.0	40	85	—	•	—	—	—			•	—	•	—	—	•	—	—			HALAWA PORTAL BUILDING—IB
MP-3	FUEL OIL TRANSFER PUMP	—	—	—	—	—	—	1/3	1,760	115	1	60	•	—	50	104	•	—	1.0	40	85	—	•	—	—	—			—	—	—	•	—	•	—	•			CONTROL BUILDING
MP-4	DRAINAGE TRANSFER PUMP	—	—	400	42	—	—	7½	1,760	460	3	60	•	—	50	104	•	—	1.0	40	85	—	•	—	—	—			—	—	—	•	—	—	—	—			HAIKU APPROACH
MP-5	MAKE-UP WATER (WELL PUMP)	—	—	100	430	—	—	25	1,760	460	3	60	—	•	50	104	•	—	1.0	40	85	•	—	—	—	—			—	—	—	•	—	•	—	—			HAIKU APPROACH
MP-6A MP-6B	DOMESTIC WATER BOOSTER PUMP	—	—	10	107	—	—	1½	3,500	460	3	60	•	—	50	104	•	—	1.0	40	85	—	•	—	—	—			•	—	•	—	—	•	—	—			HAIKU PORTAL BUILDING—OB
MP-7	DRAINAGE TRANSFER PUMP	—	—	400	42	—	—	7½	1,760	460	3	60	•	—	50	104	•	—	1.0	40	85	—	•	—	—	—			—	—	—	•	—	—	—	—			HALAWA APPROACH

FOR DETAIL AS-BUILT INFORMATION REFER TO CONSTRUCTION SUBMITTALS

DATE	REVISION

JOHN M. QUE REGISTERED PROFESSIONAL ENGINEER No. 6503-M HAWAII, U.S.A.

THIS WORK WAS PREPARED BY ME OR UNDER MY SUPERVISION

STATE OF HAWAII
DEPARTMENT OF TRANSPORTATION
HIGHWAYS DIVISION

MECHANICAL EQUIPMENT SCHEDULES I

STANDARDS

INTERSTATE ROUTE H-3

F.A.I. PROJ. NO. I-H3-1(66)

SCALE: NONE DATE: APR 1992

SHEET NO. M7 OF 28 SHEETS

ORIGINAL PLAN	SURVEY PLOTTED BY	DATE
	DRAWN BY B. BURYI	12/10/89
NOTE BOOK	TRACED BY	
	DESIGNED BY P. L. LALOQUE	11/30/88
	QUANTITIES BY	
NO.	CHECKED BY J. N. QUE	06/01/90

2410V165 2410: V165 MS0077.FGB,1 29SEP89-18.30.20

FED. ROAD DIST. NO.	STATE	FED. AID PROJ. NO.	FISCAL YEAR	SHEET NO.	TOTAL SHEETS
HAWAII	HAW.	I-H3-1(66)	1992	18	440

PLUMBING FIXTURES CONNECTION SCHEDULE

SYMBOL	FIXTURE	SOIL OR WASTE	VENT	WATER	
				CW	HW
ES	EMERGENCY SHOWER AND EYE WASH	—	—	1-1/4"	—
WC-1	WATER CLOSET - WALL HUNG - HANDICAPPED	4"	2"	1"	-
WC-1A	WATER CLOSET - WALL HUNG				
WC-2	WATER CLOSET - FLOOR MOUNTED - TANK TYPE	4"	2"	1"	-
UR	URINAL	2"	1-1/2"	1"	-
LAV-1	LAVATORY (CONTROL BUILDING / O & M TOILETS)	1-1/2"	1-1/2"	1/2"	1/2"
LAV-2	LAVATORY (PORTAL BUILDINGS)	1-1/2"	1-1/2"	1/2"	—
SS	SERVICE SINK	3"	2"	3/4"	3/4"
KS	KITCHEN SINK	2"	1-1/2"	1/2"	1/2"

WATER HEATER SCHEDULE

UNIT NO.	LOCATION	STORAGE CAPACITY GALLONS	INPUT KW	VOLT	PHASE	HZ	RECOVERY RATE GAL/HR 80°F RISE	REMARKS
WH-1	JANITOR'S ROOM CONTROL BLDG.	30	6	460	3	60	31	
WH-2	TOILET ROOMS PORTAL BLDGS.	—	3	120	1	60	—	INSTANTANEOUS TYPE
WH-3	JANITOR'S ROOM HAIKU-OB	30	6	460	3	60	31	
WH-4	O & M SHOP HAIKU-OB	—	3	120	1	60	—	INSTANTANEOUS TYPE
WH-5	O & M GARAGE HAIKU-IB	—	3	120	1	60	—	INSTANTANEOUS TYPE
WH-6	CONTROL BLDG. GARAGE	—	3	120	1	60	—	INSTANTANEOUS TYPE

2/20/95	REV. PER DCN 66-054A
8/1/94	ADDED WH-6 PER DCN 66-051
7/22/92	ADDENDUM 1 - ADDED WH-3, 4, 5
DATE	REVISION

JOHN M. GIE
REGISTERED PROFESSIONAL ENGINEER
No. 6503-M
HAWAII, U.S.A.

THIS WORK WAS PREPARED BY ME OR UNDER MY SUPERVISION

STATE OF HAWAII
DEPARTMENT OF TRANSPORTATION
HIGHWAYS DIVISION

MECHANICAL EQUIPMENT SCHEDULES 2

STANDARDS

INTERSTATE ROUTE H-3

F.A.I. PROJ. NO. I-H3-1(66)

SCALE: NONE DATE: APR 1992

SHEET NO. M8 OF 28 SHEETS

ADD. 18

		DATE
SURVEY PLOTTED BY		
DRAWN BY	B.F. BUNTI, JR.	9/12/89
TRACED BY		
DESIGNED BY	P.L. LALOUE	9/16/89
QUANTITIES BY		
CHECKED BY	J.N. GUE	5/7/90

ORIGINAL PLAN

NOTE BOOK NO.

2410V165 2410: V165 MS0078.FGB;1 020CT89-11.08.10

FED. ROAD DIST. NO.	STATE	FED. AID PROJ. NO.	FISCAL YEAR	SHEET NO.	TOTAL SHEETS
HAWAII	HAW.	I-H3-1(66)	1992	19	440

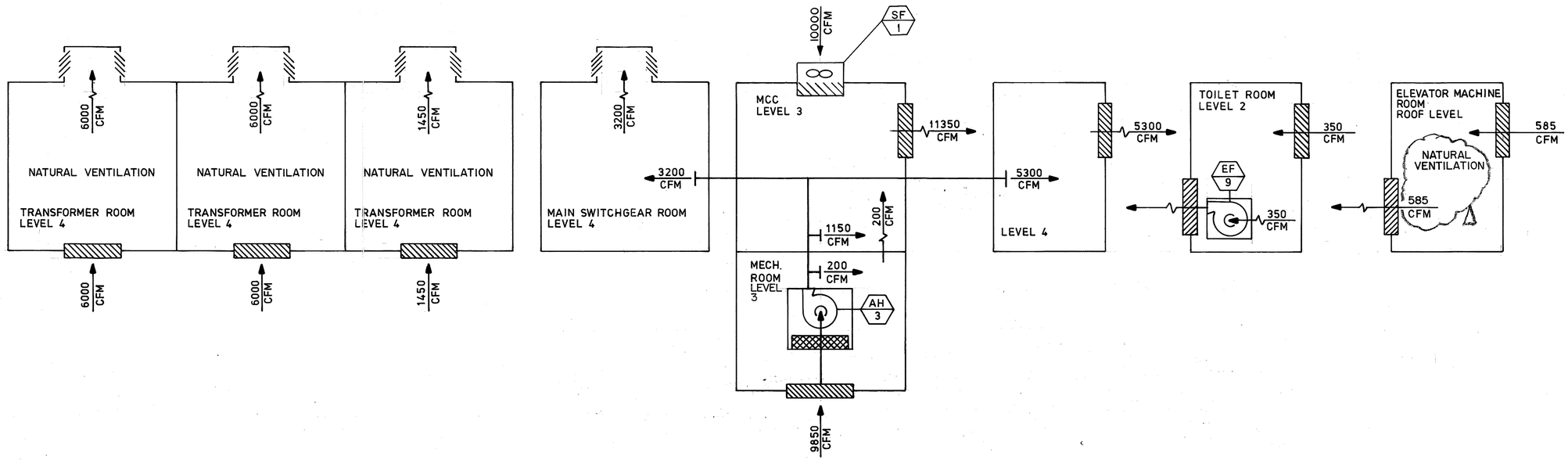

HALAWA PORTAL BUILDING OB

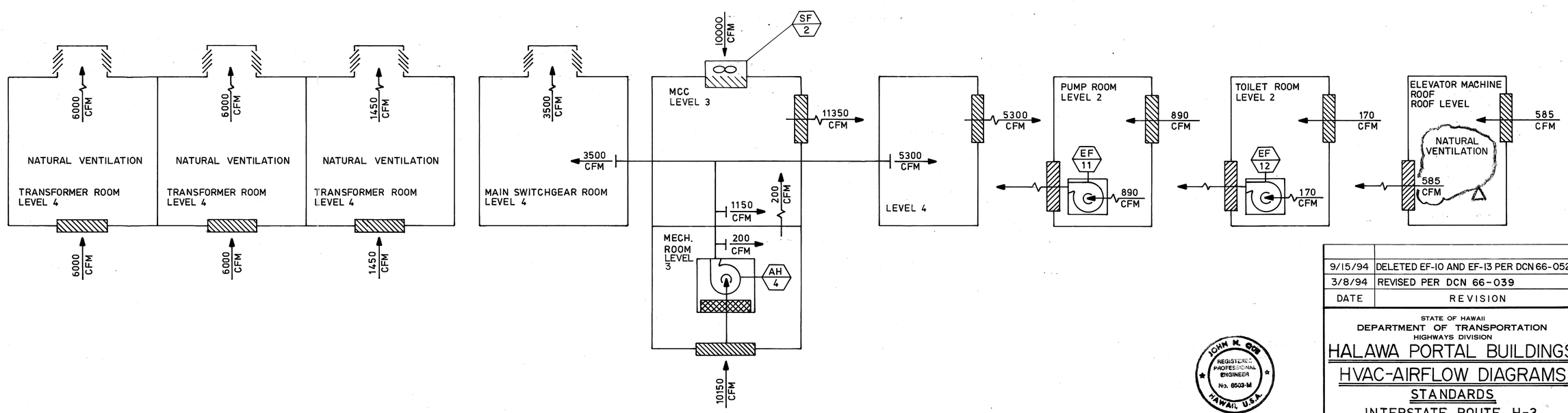

HALAWA PORTAL BUILDING IB

9/15/94	DELETED EF-10 AND EF-13 PER DCN 66-052
3/8/94	REVISED PER DCN 66-039
DATE	REVISION

STATE OF HAWAII
DEPARTMENT OF TRANSPORTATION
HIGHWAYS DIVISION

HALAWA PORTAL BUILDINGS

HVAC-AIRFLOW DIAGRAMS

STANDARDS

INTERSTATE ROUTE H-3

F.A.I. PROJ. NO. I-H3-1(66)

SCALE: NONE DATE: APR 1992

SHEET NO. M9 OF 28 SHEETS

JOHN M. GOS
REGISTERED PROFESSIONAL ENGINEER
No. 6503-M
HAWAII, U.S.A.

THIS WORK WAS PREPARED BY ME OR UNDER MY SUPERVISION

		DATE
ORIGINAL PLAN	SURVEY PLOTTED BY	
	DRAWN BY D. E. DRYDEN	9/12/89
NOTE BOOK	TRACED BY	
	DESIGNED BY A. H. PORTIER	4/18/89
	QUANTITIES BY	
No.	CHECKED BY J. N. QUE	6/15/90

FED. ROAD DIST. NO.	STATE	FED. AID PROJ. NO.	FISCAL YEAR	SHEET NO.	TOTAL SHEETS
HAWAII	HAW.	I-H3-1(66)	1992	20	440

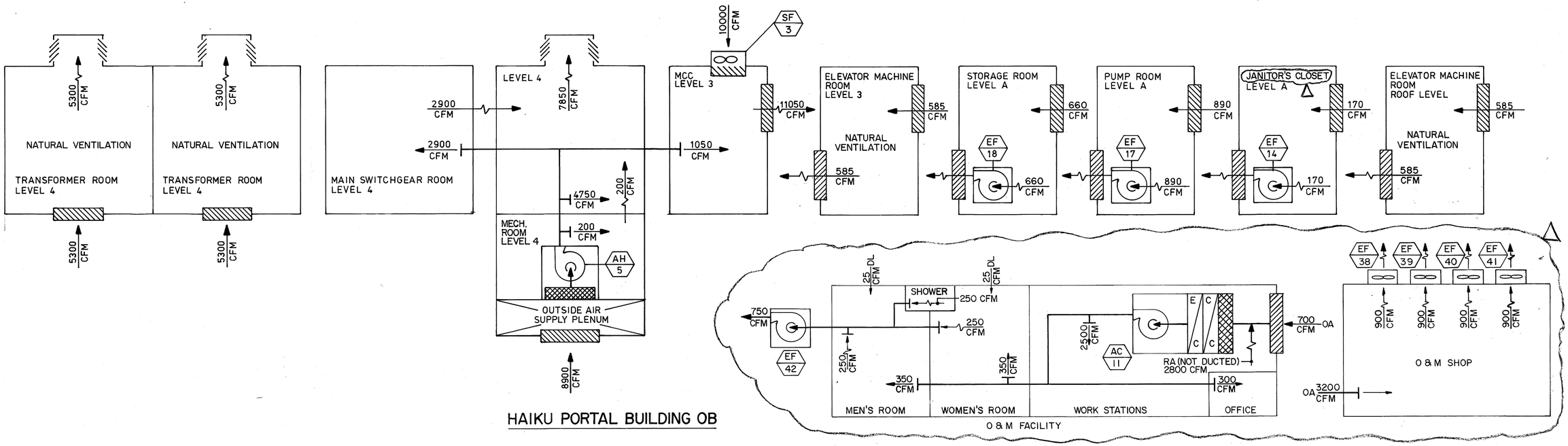

HAIKU PORTAL BUILDING OB

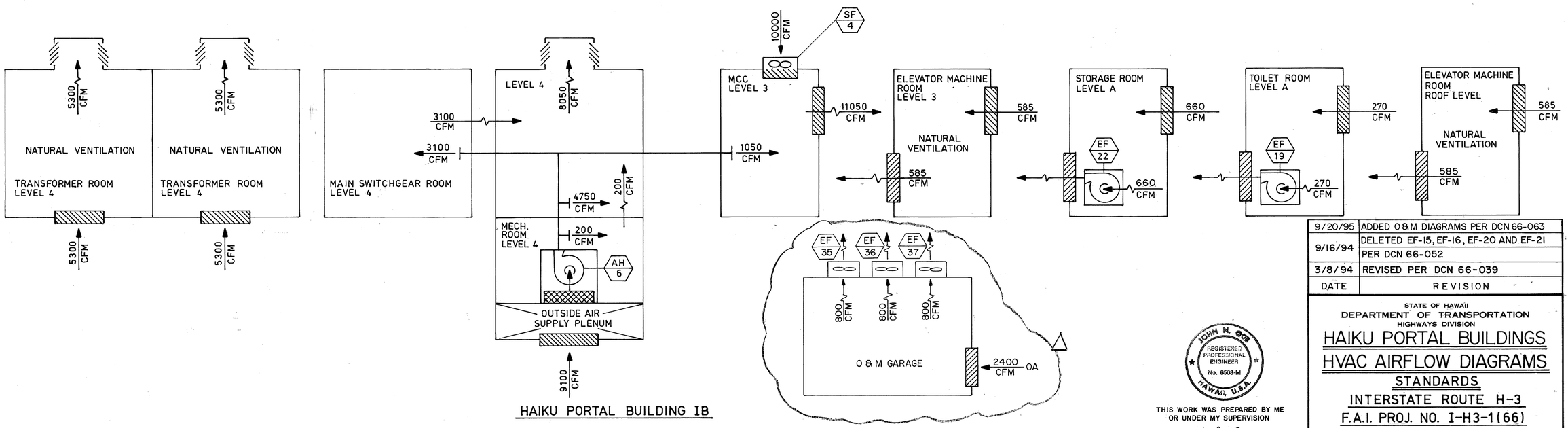

HAIKU PORTAL BUILDING IB

DATE	REVISION
9/20/95	ADDED O&M DIAGRAMS PER DCN 66-063
9/16/94	DELETED EF-15, EF-16, EF-20 AND EF-21 PER DCN 66-052
3/8/94	REVISED PER DCN 66-039

STATE OF HAWAII
DEPARTMENT OF TRANSPORTATION
HIGHWAYS DIVISION

HAIKU PORTAL BUILDINGS
HVAC AIRFLOW DIAGRAMS

STANDARDS

INTERSTATE ROUTE H-3

F.A.I. PROJ. NO. I-H3-1(66)

SCALE: NONE DATE: APR 1992

SHEET NO. M10 OF 28 SHEETS

JOHN M. GOB
REGISTERED PROFESSIONAL ENGINEER
No. 6503-M
HAWAII, U.S.A.

THIS WORK WAS PREPARED BY ME OR UNDER MY SUPERVISION

		DATE
SURVEY PLOTTED BY	D. E. DRYDEN	9/13/89
DRAWN BY	" "	"
TRACED BY	A. H. FORTIER	4/07/89
DESIGNED BY	" "	"
QUANTITIES BY	J. N. QUE	6/15/90
CHECKED BY	" "	"

ORIGINAL PLAN
NOTE BOOK
No.

FED. ROAD DIST. NO.	STATE	FED. AID PROJ. NO.	FISCAL YEAR	SHEET NO.	TOTAL SHEETS
HAWAII	HAW.	I-H3-1(66)	1992	21	440

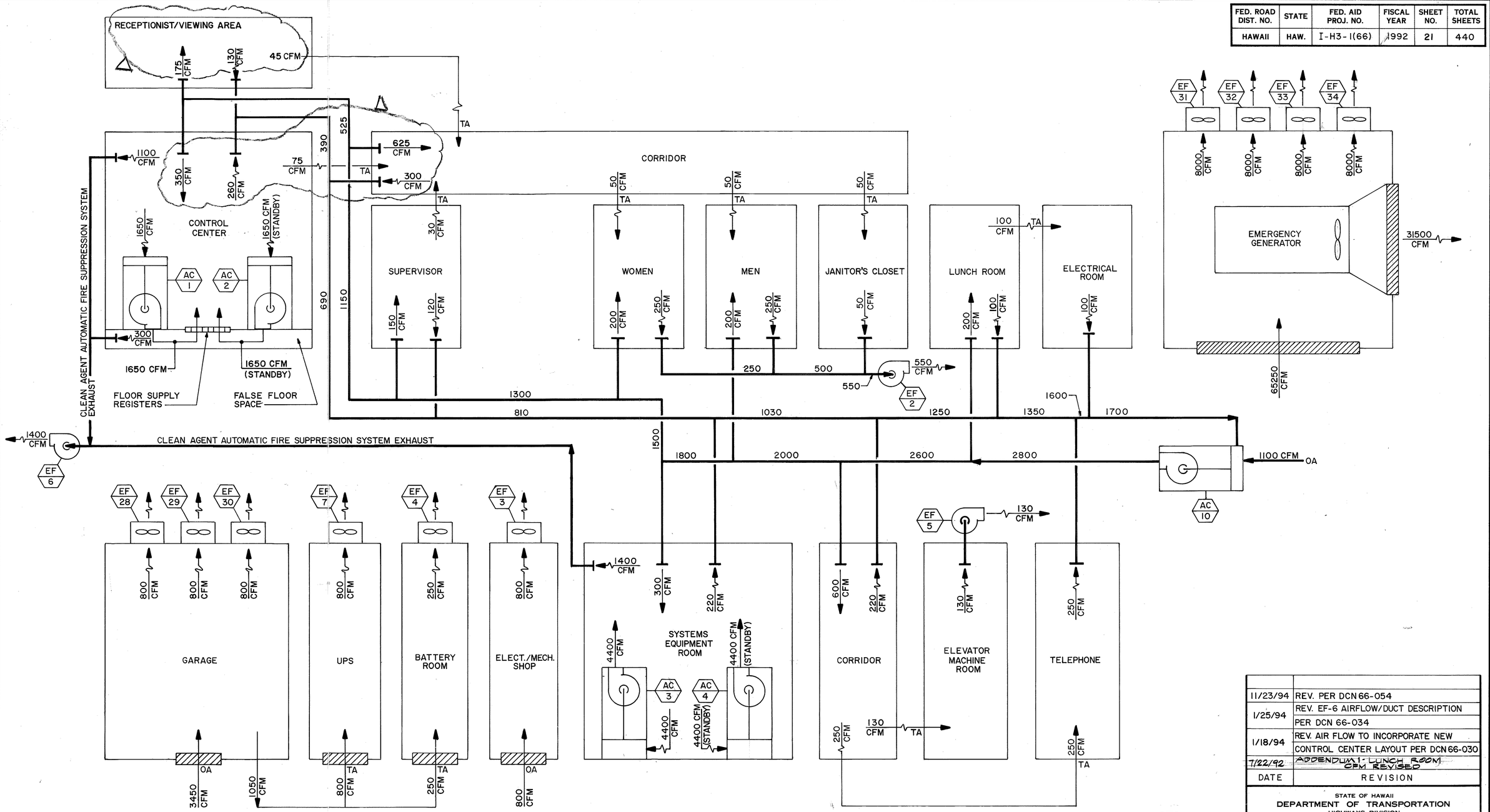

ORIGINAL PLAN	SURVEY PLOTTED BY		DATE
	DRAWN BY	D.E. DRYDEN	01/03/90
NOTE BOOK	TRACED BY		
	DESIGNED BY	A.H. PORTIER	12/07/89
	QUANTITIES BY		
No.	CHECKED BY	J.N. QUE	06/18/90

DATE	REVISION
11/23/94	REV. PER DCN 66-054
1/25/94	REV. EF-6 AIRFLOW/DUCT DESCRIPTION PER DCN 66-034
1/18/94	REV. AIR FLOW TO INCORPORATE NEW CONTROL CENTER LAYOUT PER DCN 66-030
7/22/92	ADDENDUM 1: LUNCH ROOM CFM REVISED

JOHN M. QUE REGISTERED PROFESSIONAL ENGINEER No. 6503-M HAWAII, U.S.A.

THIS WORK WAS PREPARED BY ME OR UNDER MY SUPERVISION

STATE OF HAWAII
DEPARTMENT OF TRANSPORTATION
HIGHWAYS DIVISION

CONTROL BUILDING
HVAC AIRFLOW DIAGRAM
STANDARDS

INTERSTATE ROUTE H-3
F.A.I. PROJ. NO. I-H3-1(66)

SCALE: NONE DATE: APR 1992

SHEET NO. M11 OF 28 SHEETS

FED. ROAD DIST. NO.	STATE	FED. AID PROJ. NO.	FISCAL YEAR	SHEET NO.	TOTAL SHEETS
HAWAII	HAW.	I-H3-1(61)	1992	22	440

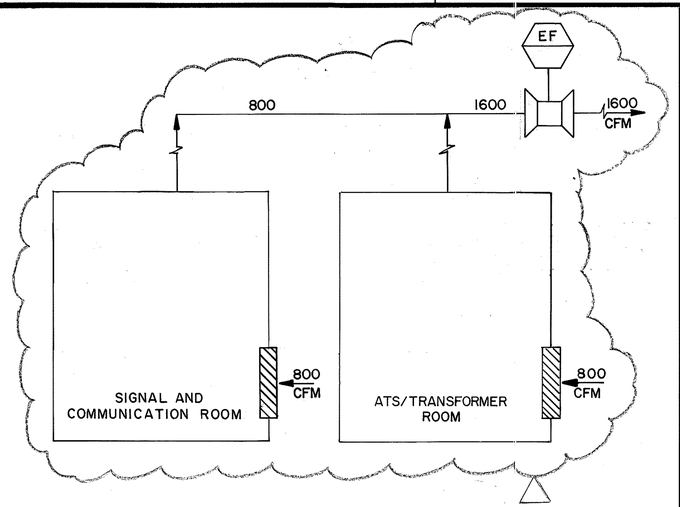

TYPICAL FOR CROSSPAGE NOS. 1, 3, 5, 7 & 9
(SEE SCHEDULE)

AIRFLOW DIAGRAM

CROSSPASSAGE HVAC & VENTILATION SCHEDULE

CROSS-PASSAGE #	ROOM	FAN
NO. 1	SIGNAL AND COMMUNICATION RM AND ATS/TRANSFORMER	EF-23
NO. 3	SIGNAL AND COMMUNICATION RM AND ATS/TRANSFORMER	EF-24
NO. 5	SIGNAL AND COMMUNICATION RM AND ATS/TRANSFORMER	EF-25
NO. 7	SIGNAL AND COMMUNICATION RM AND ATS/TRANSFORMER	EF-26
NO. 9	SIGNAL AND COMMUNICATION RM AND ATS/TRANSFORMER	EF-27

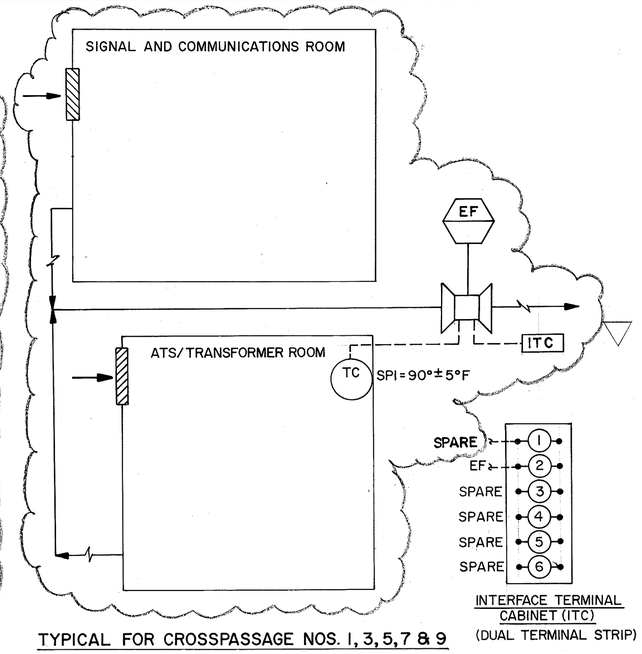

TYPICAL FOR CROSSPASSAGE NOS. 1, 3, 5, 7 & 9
(SEE SCHEDULE)

CONTROL DIAGRAM

3/3/94	DELETED AC UNITS AND REVISED EF
	PER DCN 66-037
DATE	REVISION

STATE OF HAWAII
DEPARTMENT OF TRANSPORTATION
HIGHWAYS DIVISION

CROSSPASSAGES - HVAC
AIRFLOW & CONTROL DIAGRAMS
STANDARDS
INTERSTATE ROUTE H-3
F.A.I. PROJ. NO. I-H3-1(66)

SCALE: NONE DATE: APR 1992

SHEET NO. M12 OF 28 SHEETS

JOHN M. GOR
REGISTERED PROFESSIONAL ENGINEER
No. 6603-M
HAWAII, U.S.A.

THIS WORK WAS PREPARED BY ME OR UNDER MY SUPERVISION

SURVEY PLOTTED BY	
DRAWN BY	B. F. BUNYI — DATE 11/15/89
TRACED BY	" "
DESIGNED BY	A. H. PORTIER — " 10/10/89
QUANTITIES BY	" "
CHECKED BY	J. N. QUE — " 06/15/90

ORIGINAL PLAN

NOTE BOOK No.

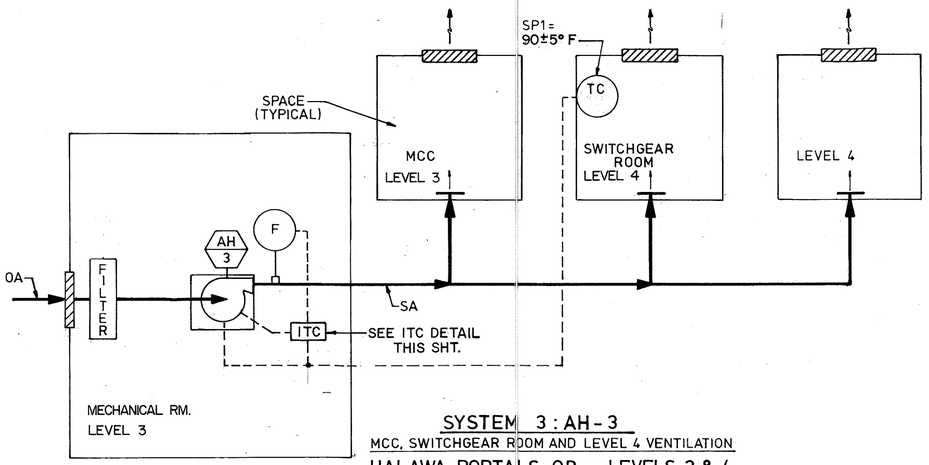

SYSTEM 3 : AH-3
MCC, SWITCHGEAR ROOM AND LEVEL 4 VENTILATION
HALAWA PORTALS OB — LEVELS 3 & 4

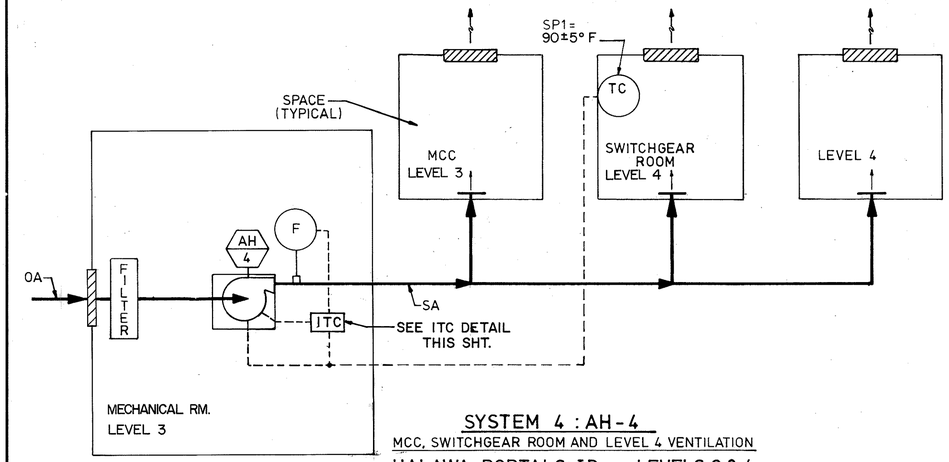

SYSTEM 4 : AH-4
MCC, SWITCHGEAR ROOM AND LEVEL 4 VENTILATION
HALAWA PORTALS IB — LEVELS 3 & 4

FED. ROAD DIST. NO.	STATE	FED. AID PROJ. NO.	FISCAL YEAR	SHEET NO.	TOTAL SHEETS
HAWAII	HAW.	I-H3-1(66)	1992	23	440

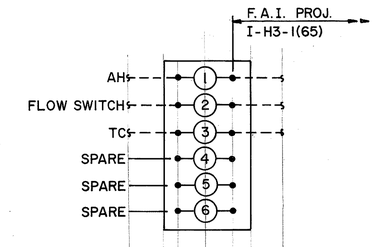

INTERFACE TERMINAL CABINET (ITC) DETAIL
(DUAL TERMINAL STRIP)

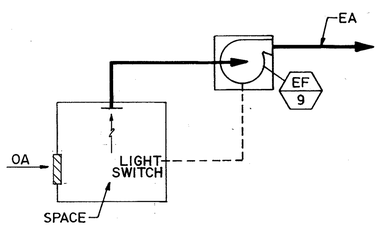

SYSTEM 15 : EF-9
TOILET ROOM EXHAUST
HALAWA PORTALS OB
LEVEL 2

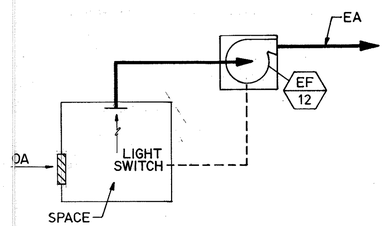

SYSTEM 18: EF-12
TOILET ROOM EXHAUST
HALAWA PORTALS IB
LEVEL 2

NOTES :

1. FOR SEQUENCE OF OPERATION SEE SPECIFICATION.

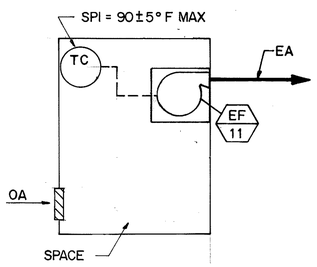

SYSTEM 17 : EF-11
PUMP ROOM VENTILATION
HALAWA PORTALS IB
LEVEL 2

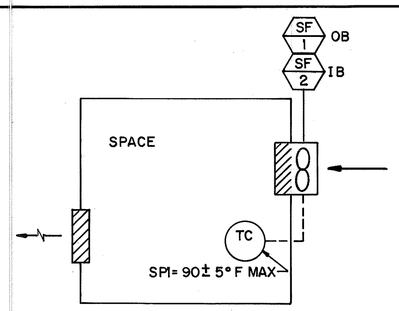

MCC ROOM VENTILATION
HALAWA PORTALS OB & IB
LEVEL 3

9/15/94	DELETED SYSTEM 16: EF-10 AND SYSTEM 19: EF-13 PER DCN 66-052
3/9/94	REVISED PER DCN 66-039
DATE	REVISION

		DATE
ORIGINAL PLANS	SURVEY PLOT TED BY	
	DRAWN BY D. E. DRYDEN	8/31/89
	TRACED BY	
	DESIGNED BY A. H. PORTIER	8/08/89
NOTE BOOK		
	QUANTITIES BY	
NO.	CHECKED BY J. N. QUE	6/18/90

THIS WORK WAS PREPARED BY ME OR UNDER MY SUPERVISION

STATE OF HAWAII
DEPARTMENT OF TRANSPORTATION
HIGHWAYS DIVISION

HALAWA PORTAL BUILDINGS
HVAC CONTROL DIAGRAMS
STANDARDS
INTERSTATE ROUTE H-3
F.A.I. PROJ. NO. I-H3-1(66)

SCALE: NONE DATE: APR 1992

SHEET NO. M13 OF 28 SHEETS

FED. ROAD DIST. NO.	STATE	FED. AID PROJ. NO.	FISCAL YEAR	SHEET NO.	TOTAL SHEETS
HAWAII	HAW.	I-H3-1(66)	1992	24	440

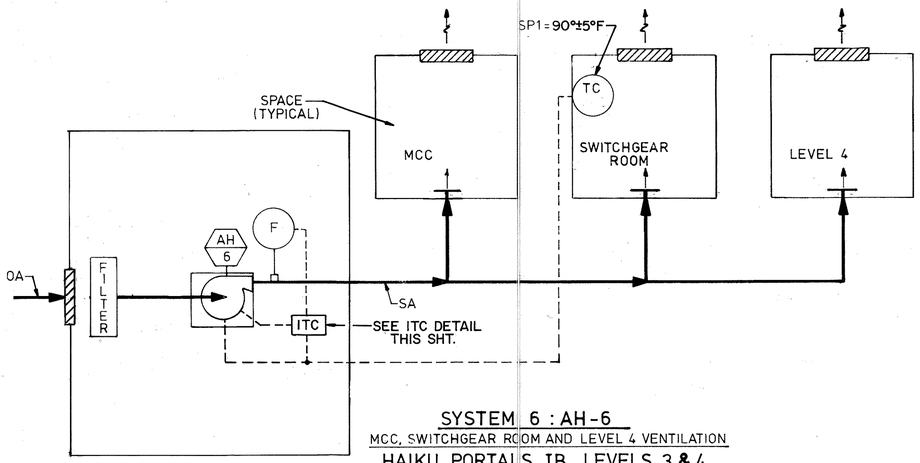

SYSTEM 6 : AH-6
MCC, SWITCHGEAR ROOM AND LEVEL 4 VENTILATION
HAIKU PORTALS IB LEVELS 3 & 4

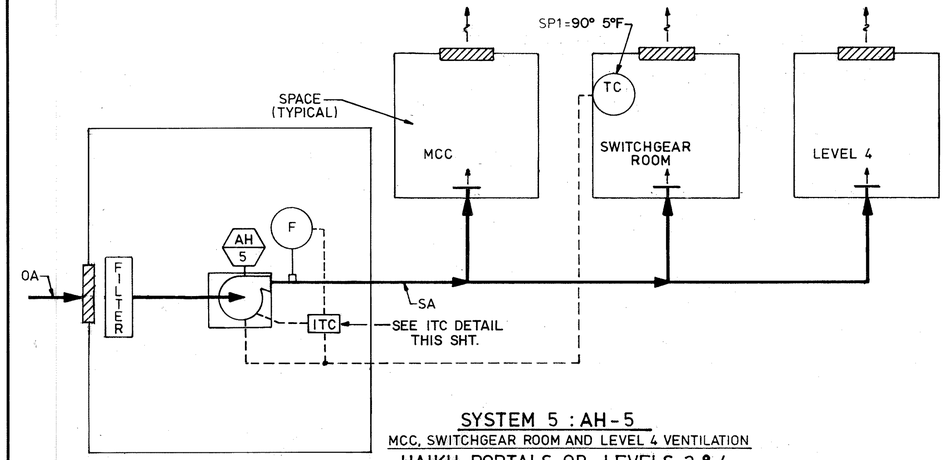

SYSTEM 5 : AH-5
MCC, SWITCHGEAR ROOM AND LEVEL 4 VENTILATION
HAIKU PORTALS OB LEVELS 3 & 4

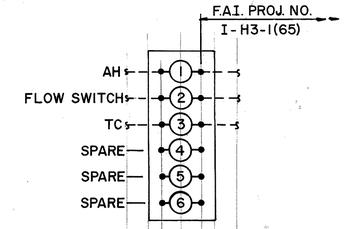

INTERFACE TERMINAL CABINET (ITC) DETAIL
(DUAL TERMINAL STRIP)

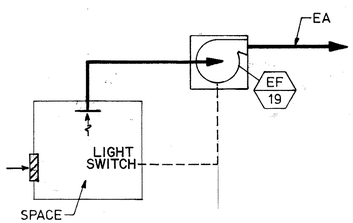

SYSTEM 25 : EF-19
TOILET ROOM EXHAUST
HAIKU PORTALS IB
LEVEL A

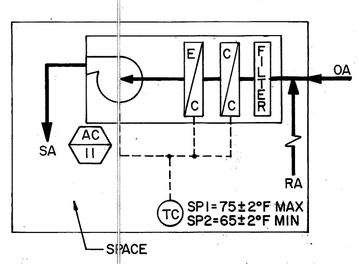

SYSTEM 44: AC-11
O & M OFFICE
HAIKU PORTALS OB
LEVEL A

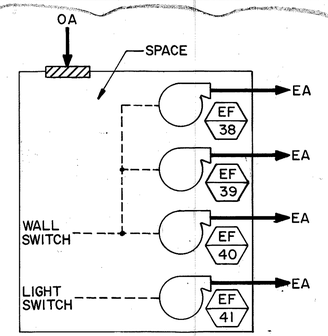

SYSTEM 42: EF-38, EF-39, EF-40, & EF-41
O & M SHOP
HAIKU PORTALS OB
LEVEL A

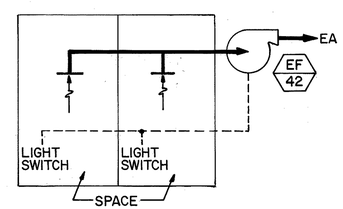

SYSTEM 43: EF-42
O & M MEN'S ROOM AND WOMEN'S ROOM
HAIKU PORTALS OB
LEVEL A

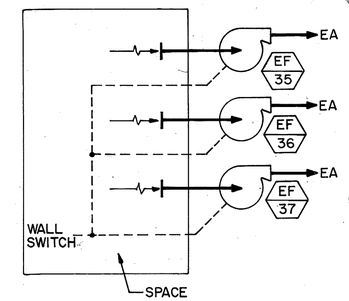

SYSTEM 41 EF-35, EF-36, & EF-37
O & M GARAGE
HAIKU PORTALS IB
LEVEL A

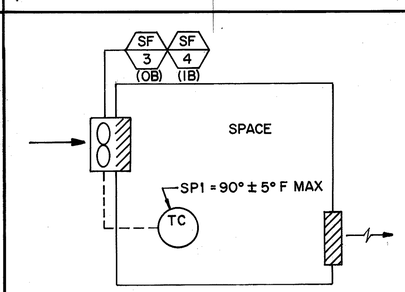

MCC ROOM VENTILATION
HAIKU PORTALS OB & IB
LEVEL 3

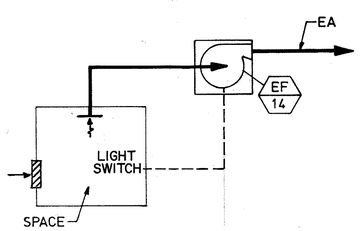

SYSTEM 20 : EF-14
JANITOR'S CLOSET
HAIKU PORTALS OB
LEVEL A

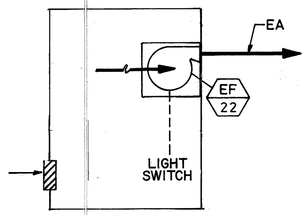

SYSTEM 28: EF-22
STORAGE ROOM VENTILATION
HAIKU PORTALS IB
LEVEL A

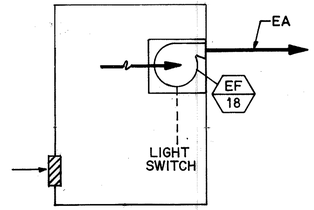

SYSTEM 24: EF-18
STORAGE ROOM VENTILATION
HAIKU PORTALS OB
LEVEL A

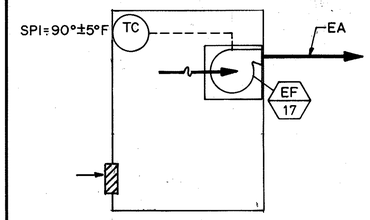

SYSTEM 23: EF-17
PUMP ROOM VENTILATION
HAIKU PORTALS OB
LEVEL A

9/20/95	ADDED O&M DIAGRAMS PER DCN 66-063
9/15/94	DELETED SYSTEM 21: EF-15, SYSTEM 22: EF-16, SYSTEM 26: EF-20 AND SYSTEM 27: EF-21 PER DCN 66-052
3/9/94	REVISED PER DCN 66-039
DATE	REVISION

JOHN N. GUE
REGISTERED PROFESSIONAL ENGINEER
No. 6503-M
HAWAII, U.S.A.

THIS WORK WAS PREPARED BY ME OR UNDER MY SUPERVISION

STATE OF HAWAII
DEPARTMENT OF TRANSPORTATION
HIGHWAYS DIVISION

HAIKU PORTAL BUILDINGS
HVAC CONTROL DIAGRAMS
STANDARDS
INTERSTATE ROUTE H-3
F.A.I. PROJ. NO. I-H3-1(66)

SCALE: NONE DATE: APR 1992

SHEET NO. M14 OF 28 SHEETS

		DATE
ORIGINAL PLAN	SURVEYS PLOTTED BY	
	DRAWN BY D. E. DRYDEN	8/30/89
	TRACED BY	
	DESIGNED BY A. H. PORTIER	8/15/89
NOTE BOOK	CHECKED BY	
	QUANTITIES BY	
No.	CHECKED BY J. N. GUE	6/18/90

FED. ROAD DIST. NO.	STATE	FED. AID PROJ. NO.	FISCAL YEAR	SHEET NO.	TOTAL SHEETS
HAWAII	HAW.	I-H3-1(66)	1992	25	440

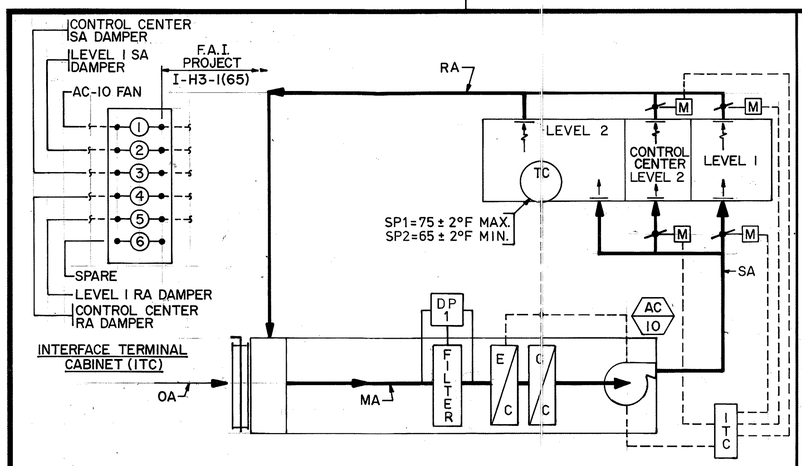

SYSTEM 1: AC-10
LEVELS 1 AND 2 HVAC

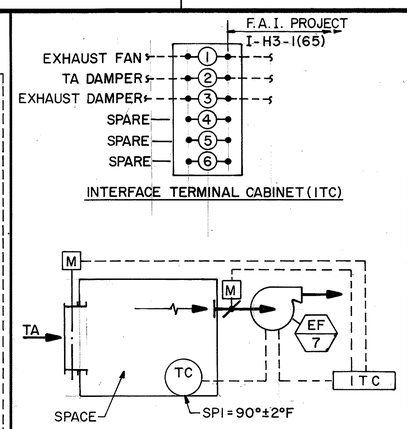

SYSTEM 2: EF-7
UPS ROOM VENTILATION

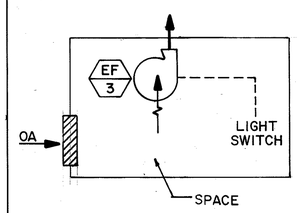

SYSTEM 39: EF-3
ELECT./MECH. SHOP VENTILATION

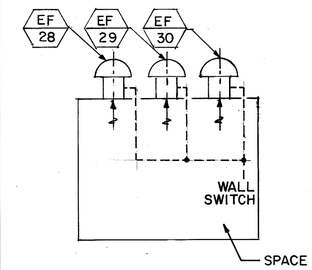

SYSTEM 11: EF-28, EF-29 & EF-30
GARAGE VENTILATION

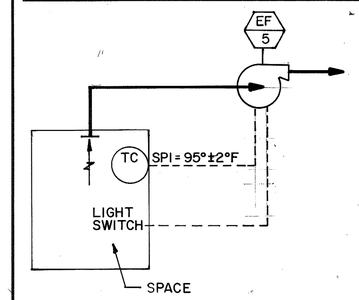

SYSTEM 40: EF-5
ELEVATOR MACHINE ROOM VENTILATION

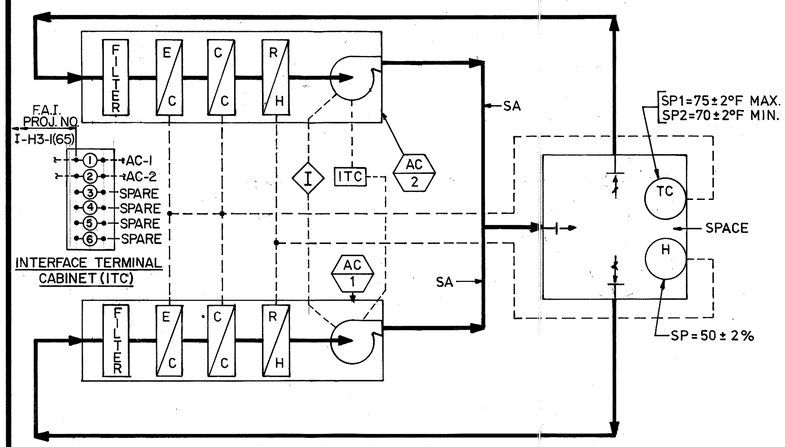

SYSTEM 7: AC-1 AND AC-2
LEVEL 2 CONTROL CENTER

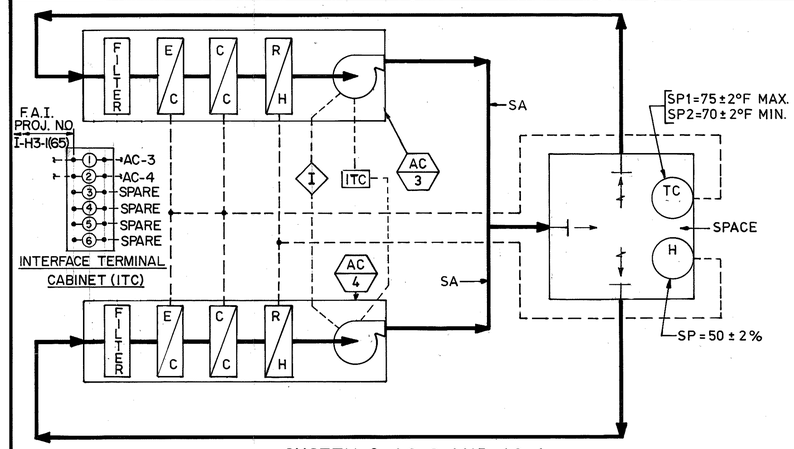

SYSTEM 8: AC-3 AND AC-4
LEVEL 1 SYSTEMS EQUIPMENT ROOM

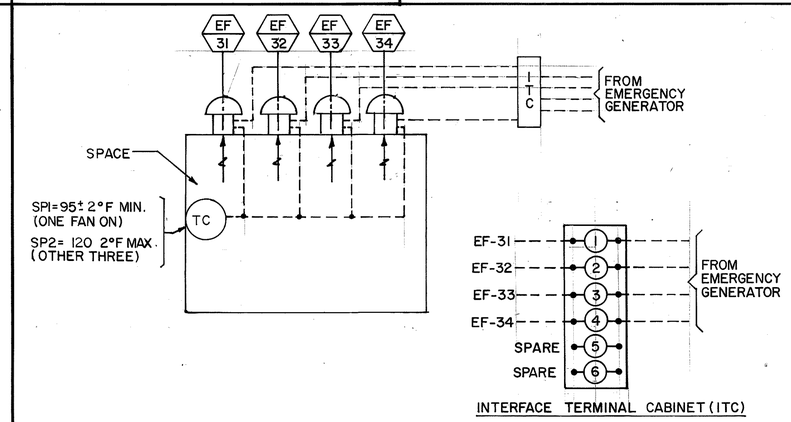

EMERGENCY GENERATOR
VENTILATION

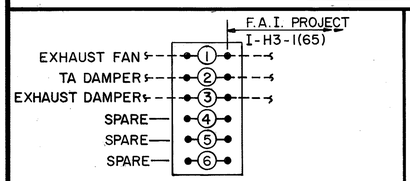

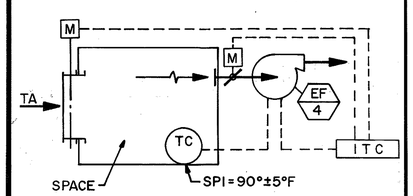

SYSTEM 9: EF-4
BATTERY ROOM VENTILATION

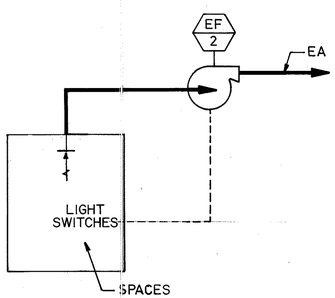

SYSTEM 10: EF-2
LEVEL 2 TOILETS, JANITOR ROOM VENTILATION

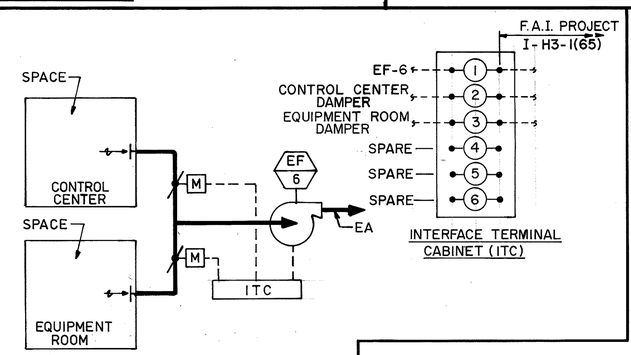

SYSTEM 13: EF-6
CLEAN AGENT AUTOMATIC FIRE SUPPRESSION SYSTEM EXHAUST

NOTE:
1. FOR SEQUENCE OF OPERATION, REFER TO SPECIFICATION.
2. ITC - INTERFACE TERMINAL CABINET (DUAL TERMINAL STRIP)

JOHN M. GOE REGISTERED PROFESSIONAL ENGINEER No. 6503-M HAWAII, U.S.A.

THIS WORK WAS PREPARED BY ME OR UNDER MY SUPERVISION

DATE	REVISION
1/25/94	REV. 'SYSTEM 13: EF-6' DESCRIPTION PER DCN 66-034

STATE OF HAWAII
DEPARTMENT OF TRANSPORTATION
HIGHWAYS DIVISION

CONTROL BUILDING
HVAC CONTROL DIAGRAMS

STANDARDS
INTERSTATE ROUTE H-3
F.A.I. PROJ. NO. I-H3-1(66)

SCALE: NONE DATE: APR 1992

SHEET NO. M15 OF 28 SHEETS

ORIGINAL PLAN		DATE
SURVEY PLOTTED BY		
DRAWN BY	D. E. DRYDEN	9/05/89
TRACED BY		
DESIGNED BY	A. H. PORTIER	8/02/89
QUANTITIES BY		
CHECKED BY	J. N. QUE	05/18/90
NOTE BOOK		
NO.		

FED. ROAD DIST. NO.	STATE	FED. AID PROJ. NO.	FISCAL YEAR	SHEET NO.	TOTAL SHEETS
HAWAII	HAW.	I-H3-1(66)	1992	26	440

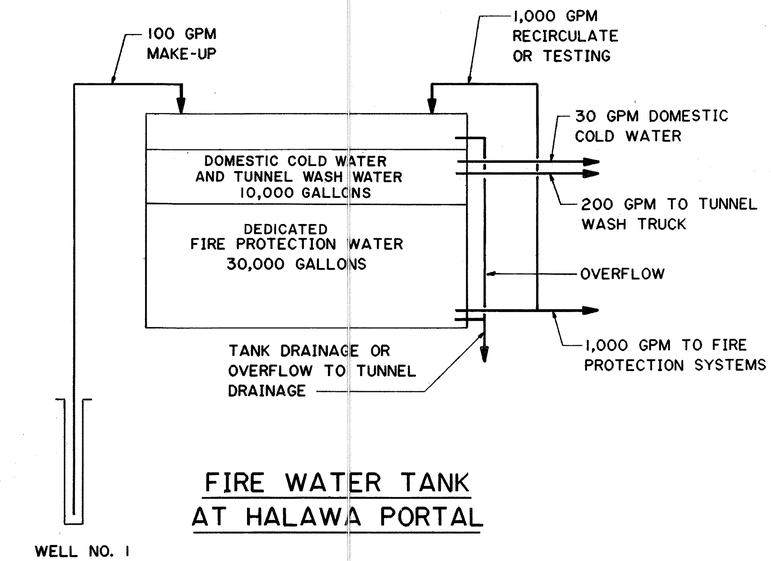

FIRE WATER TANK AT HALAWA PORTAL

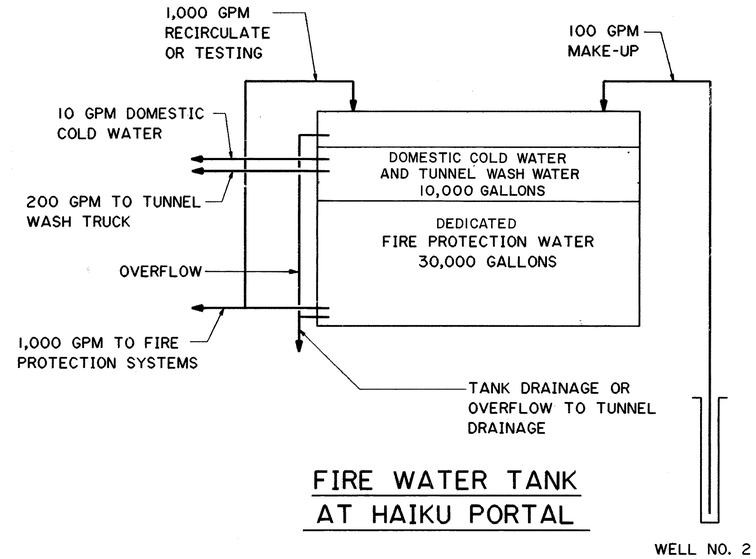

FIRE WATER TANK AT HAIKU PORTAL

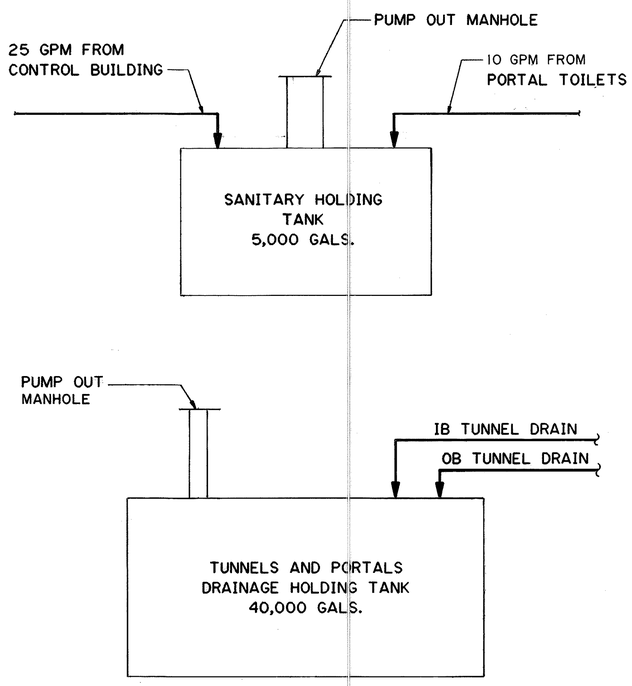

HALAWA APPROACH

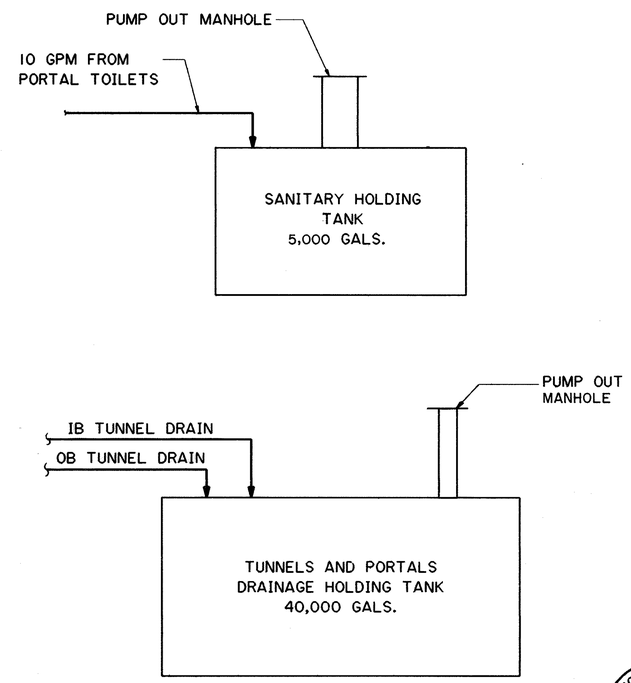

HAIKU APPROACH

JOHN N. QUE
REGISTERED PROFESSIONAL ENGINEER
No. 6503-M
HAWAII, U.S.A.

THIS WORK WAS PREPARED BY ME OR UNDER MY SUPERVISION

DATE	REVISION

STATE OF HAWAII
DEPARTMENT OF TRANSPORTATION
HIGHWAYS DIVISION

PLUMBING
WATER BALANCE DIAGRAM
STANDARDS
INTERSTATE ROUTE H-3
F.A.I. PROJ. NO. I-H3-1(66)

SCALE: NONE DATE: APR 1992

SHEET NO. M16 OF 28 SHEETS

ORIGINAL PLAN
SURVEY PLOTTED BY DATE
DRAWN BY B.F.GUNYI, JR. " 5/12/89
TRACED BY " " 5/12/89
DESIGNED BY P.L.LALOUE " 4/25/89
QUANTITIES BY " " 6/06/90
CHECKED BY J.N. QUE
NOTE BOOK
NO.

2410V165 2410: V165 MS0053.FGB;1 06OCT89-16.11.00

FED. ROAD DIST. NO.	STATE	FED. AID PROJ. NO.	FISCAL YEAR	SHEET NO.	TOTAL SHEETS
HAWAII	HAW.	I-H3-1(66)	1992	27	440

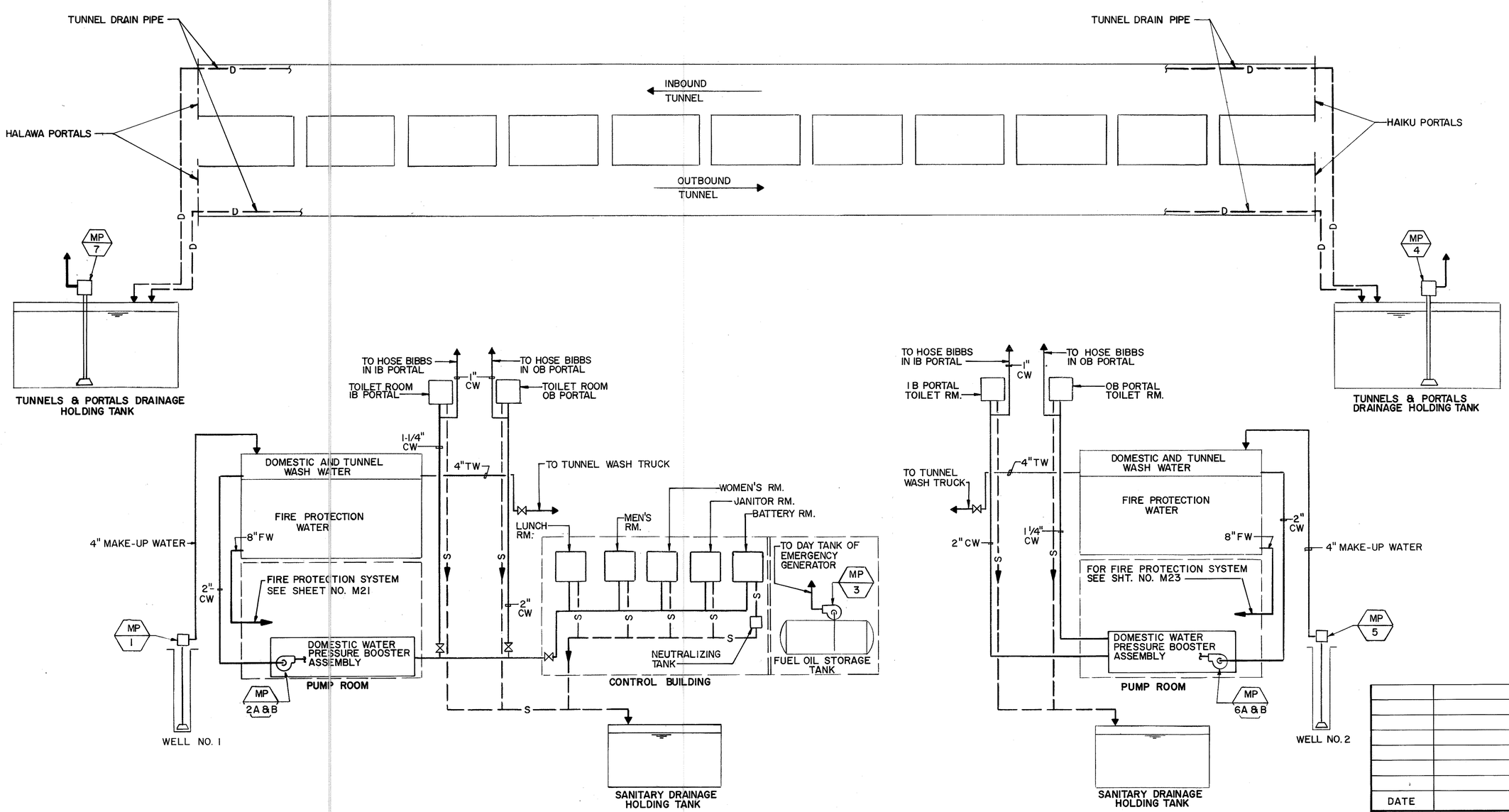

ORIGINAL PLAN		DATE
	SURVEY PLOTTED BY	
	DRAWN BY B. F. BUNYI	6/12/89
NOTE BOOK	TRACED BY	6/4/89
	DESIGNED BY P.L. LALOUE	
No.	QUANTITIES BY	
	CHECKED BY J. N. QUE	06/01/90

JOHN N. QUE
REGISTERED PROFESSIONAL ENGINEER
No. 6503-M
HAWAII, U.S.A.

THIS WORK WAS PREPARED BY ME OR UNDER MY SUPERVISION

DATE	REVISION

STATE OF HAWAII
DEPARTMENT OF TRANSPORTATION
HIGHWAYS DIVISION

PLUMBING - PIPING DIAGRAM

STANDARDS

INTERSTATE ROUTE H-3
F.A.I. PROJ. NO. I-H3-1(66)

SCALE: NONE DATE: APR 1992

SHEET NO. M17 OF 28 SHEETS

FED. ROAD DIST. NO.	STATE	FED. AID PROJ. NO.	FISCAL YEAR	SHEET NO.	TOTAL SHEETS
HAWAII	HAW.	I-H3-1(66)	1992	28	440

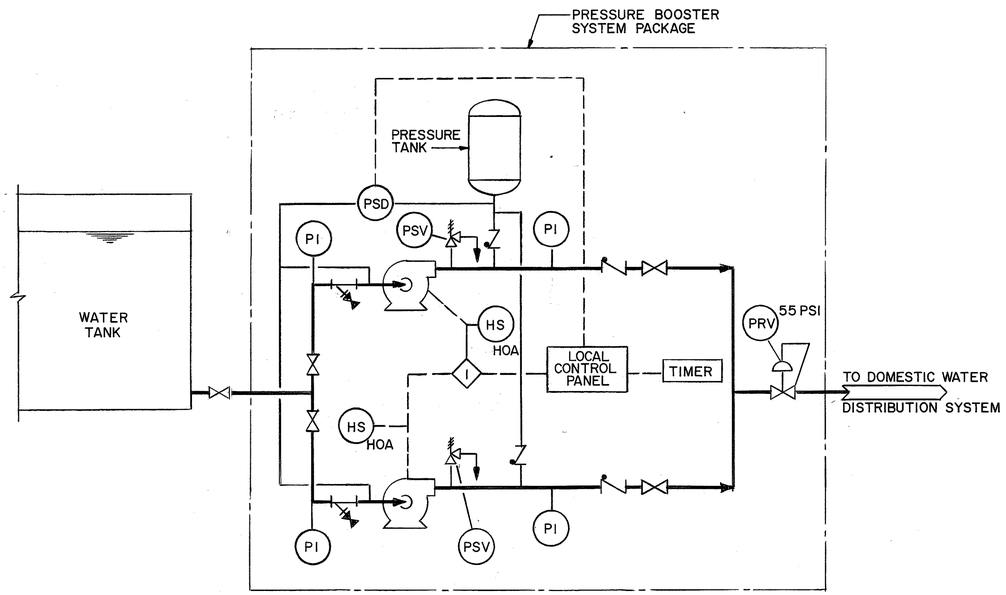

MP 2A / MP 2B — HALAWA PORTAL

MP 6A / MP 6B — HAIKU PORTAL

DOMESTIC WATER BOOSTER PUMP

DOMESTIC WATER SYSTEM

ORIGINAL PLAN		DATE
	SURVEY PLOTTED BY	
	DRAWN BY P.L. LALOUE	01/18/90
	TRACED BY	" "
NOTE BOOK	DESIGNED BY D.E. DRYDEN	01/16/90
	QUANTITIES BY	" "
No.	CHECKED BY J.N. QUE	06/01/90

DATE	REVISION

JOHN N. QUE
REGISTERED PROFESSIONAL ENGINEER
No. 6503-M
HAWAII, U.S.A.

THIS WORK WAS PREPARED BY ME OR UNDER MY SUPERVISION

STATE OF HAWAII
DEPARTMENT OF TRANSPORTATION
HIGHWAYS DIVISION

PLUMBING
CONTROL DIAGRAMS
STANDARDS

INTERSTATE ROUTE H-3
F.A.I. PROJ. NO. I-H3-1(66)

SCALE: NONE DATE: APR 1992

SHEET NO. M18 OF 28 SHEETS

FED. ROAD DIST. NO.	STATE	FED. AID PROJ. NO.	FISCAL YEAR	SHEET NO.	TOTAL SHEETS
HAWAII	HAW.	I-H3-1(66)	1992	29	440

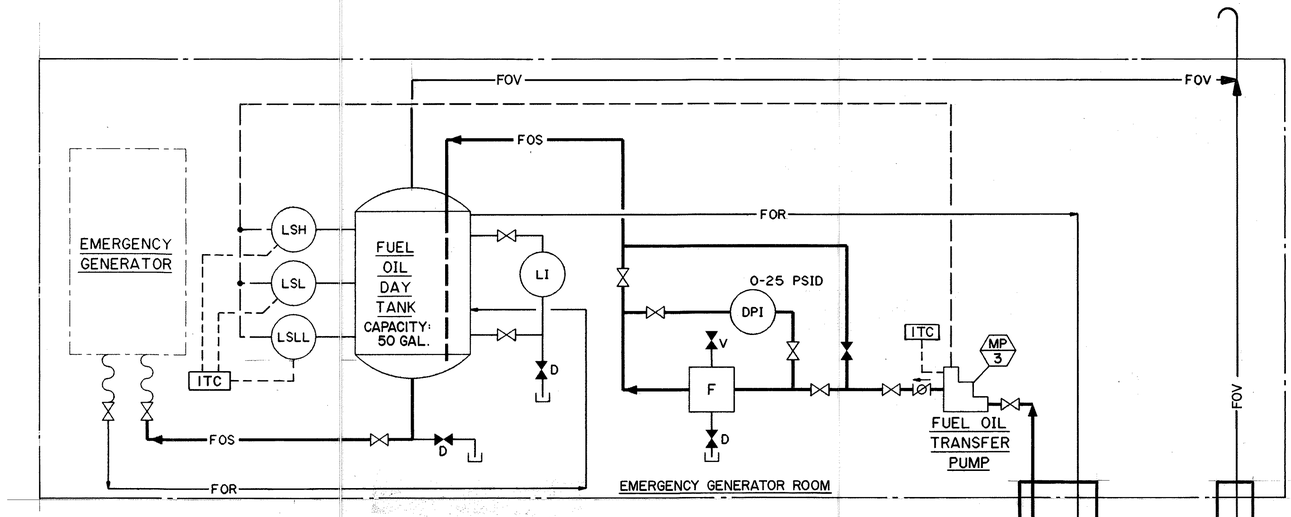

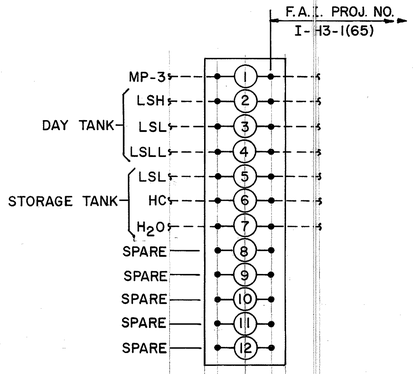

INTERFACE TERMINAL CABINET (ITC)

(DUAL TERMINAL STRIP)

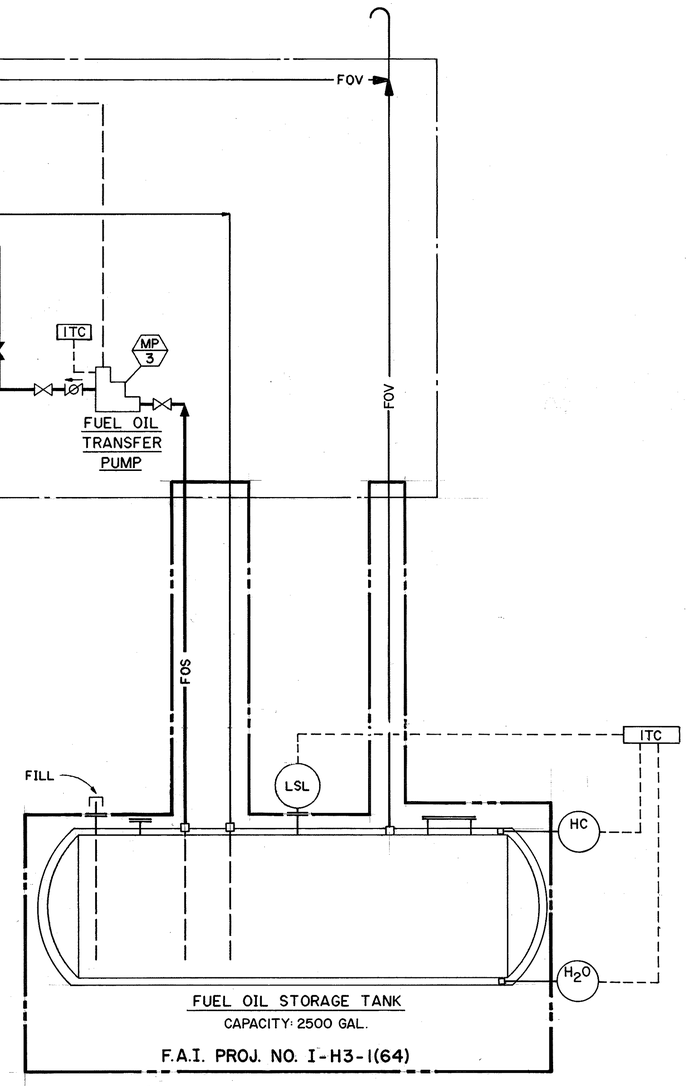

DATE	REVISION

STATE OF HAWAII
DEPARTMENT OF TRANSPORTATION
HIGHWAYS DIVISION

EMERGENCY GENERATOR P&ID STANDARDS

INTERSTATE ROUTE H-3
F.A.I. PROJ. NO. I-H3-1(66)

SCALE: NONE DATE: APR 1992

JOHN M. OKI REGISTERED PROFESSIONAL ENGINEER No. 6503-M HAWAII, U.S.A.

THIS WORK WAS PREPARED BY ME OR UNDER MY SUPERVISION

SHEET NO. M19 OF 28 SHEETS

ORIGINAL PLAN	SURVEY PLOTTED BY	DATE
	DRAWN BY D.E. DRYDEN	01/25/90
	TRACED BY	
NOTE BOOK	DESIGNED BY D.E. DRYDEN	01/22/90
	QUANTITIES BY	
NO.	CHECKED BY J.N. QUE	06/01/90

2410V165 2410: V165 MS0073.FGB/1 170CT89-11.40.30

FED. ROAD DIST. NO.	STATE	FED. AID PROJ. NO.	FISCAL YEAR	SHEET NO.	TOTAL SHEETS
HAWAII	HAW.	I-H3-1(66)	1992	30	440

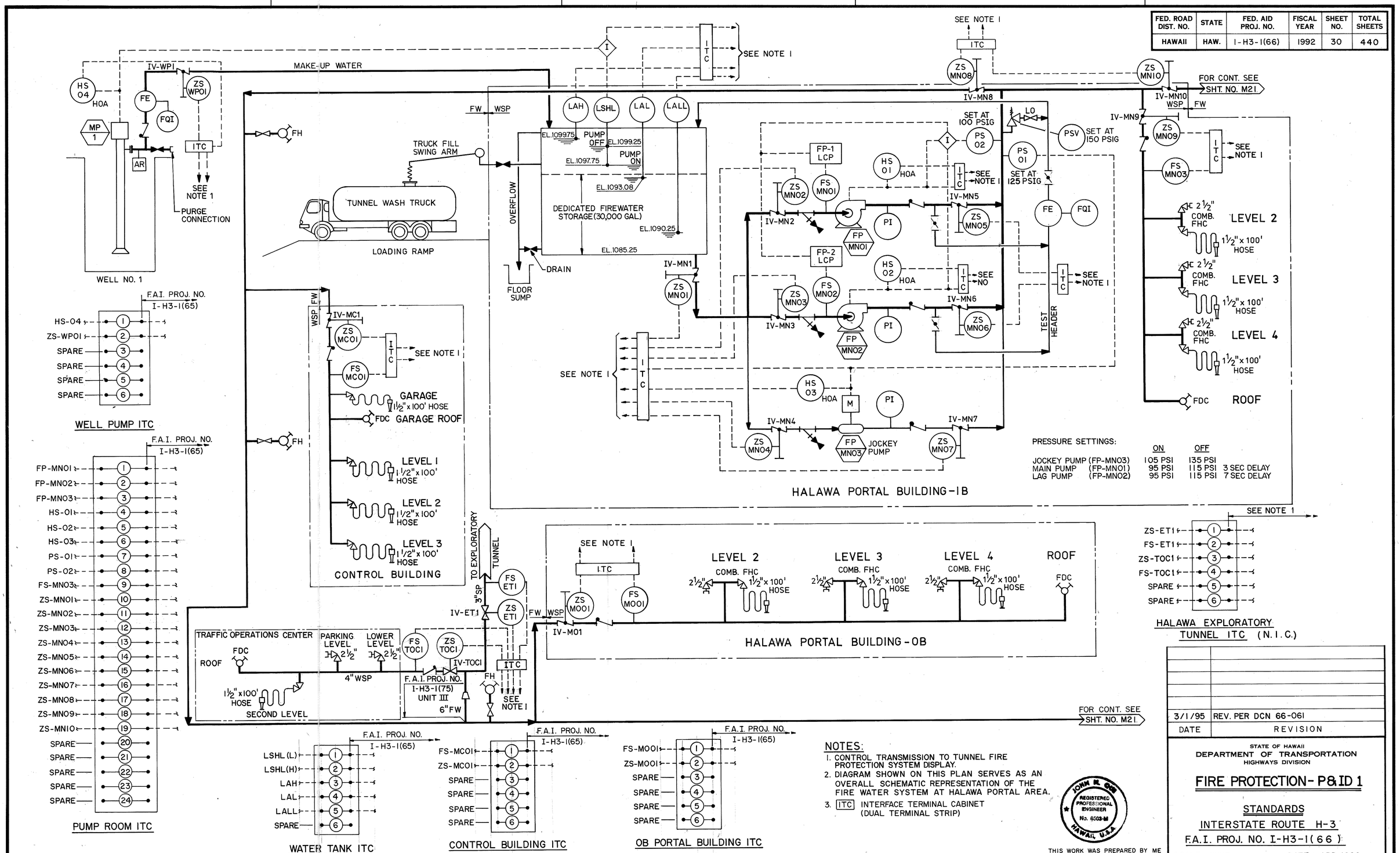

NOTES:

1. CONTROL TRANSMISSION TO TUNNEL FIRE PROTECTION SYSTEM DISPLAY.
2. DIAGRAM SHOWN ON THIS PLAN SERVES AS AN OVERALL SCHEMATIC REPRESENTATION OF THE FIRE WATER SYSTEM AT HALAWA PORTAL AREA.
3. ITC INTERFACE TERMINAL CABINET (DUAL TERMINAL STRIP)

JOHN M. GUE REGISTERED PROFESSIONAL ENGINEER No. 6503-M HAWAII, U.S.A.

THIS WORK WAS PREPARED BY ME OR UNDER MY SUPERVISION.

DATE	REVISION
3/1/95	REV. PER DCN 66-061

STATE OF HAWAII
DEPARTMENT OF TRANSPORTATION
HIGHWAYS DIVISION

FIRE PROTECTION - P&ID 1

STANDARDS
INTERSTATE ROUTE H-3
F.A.I. PROJ. NO. I-H3-1(66)

SCALE: NONE DATE: APR 1992

SHEET NO. M20 OF 28 SHEETS

		DATE
SURVEY PLOTTED BY		
DRAWN BY	D. E. DRYDEN	07/6/89
TRACED BY		
NOTE BOOK		
DESIGNED BY	D. E. DRYDEN	07/3/89
QUANTITIES BY		
CHECKED BY	J. N. GUE	06/18/90

ORIGINAL PLAN

FED. ROAD DIST. NO.	STATE	FED. AID PROJ. NO.	FISCAL YEAR	SHEET NO.	TOTAL SHEETS
HAWAII	HAW.	I-H3-1(66)	1992	31	440

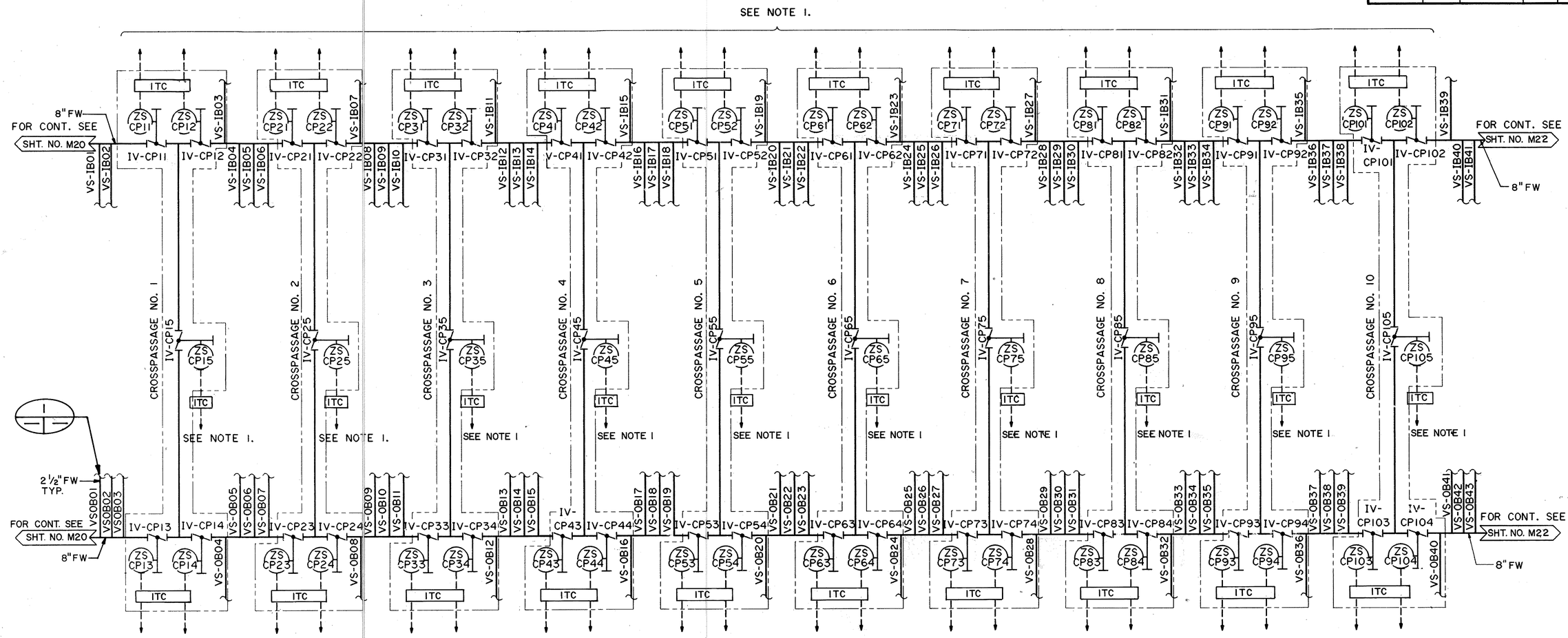

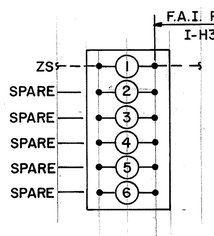

CROSSPASSAGE INTERFACE TERMINAL CABINET (ITC)
(DUAL TERMINAL STRIP)

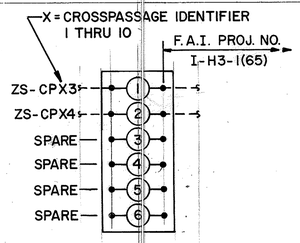

OB VALVE PIT INTERFACE TERMINAL CABINET (ITC)
(DUAL TERMINAL STRIP)

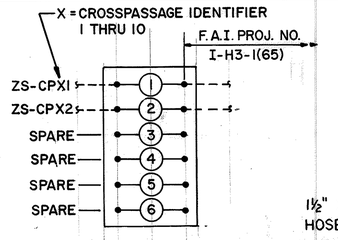

IB VALVE PIT INTERFACE TERMINAL CABINET (ITC)
(DUAL TERMINAL STRIP)

SEE NOTE 1.

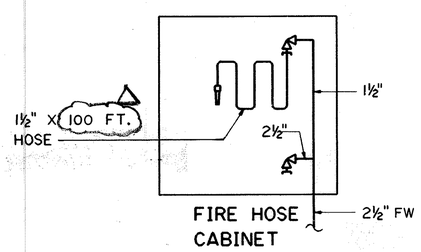

FIRE HOSE CABINET

DETAIL 1
TYP. 85 PLACES

NOTES:

1. CONTROL TRANSMISSION TO TUNNEL FIRE PROTECTION SYSTEM DISPLAY.
2. DIAGRAM SHOWN ON THIS PLAN SERVES AS AN OVERALL SCHEMATIC REPRESENTATION OF THE FIRE WATER SYSTEM IN THE TUNNELS.

JOHN N. QUE
REGISTERED PROFESSIONAL ENGINEER
No. 6503-M
HAWAII, U.S.A.

THIS WORK WAS PREPARED BY ME OR UNDER MY SUPERVISION

DATE	REVISION
10/29/93	REVISED LENGTH OF 1½" HOSE FROM 125' TO 100' PER DCN 66-024

STATE OF HAWAII
DEPARTMENT OF TRANSPORTATION
HIGHWAYS DIVISION

FIRE PROTECTION - P & ID - 2

STANDARDS
INTERSTATE ROUTE H-3
F.A.I. PROJ. NO. I-H3-1(66)

SCALE: NONE DATE: APR 1992

SHEET NO. M21 OF 28 SHEETS

SURVEY PLOTTED BY		
TOPOGRAPHY VERIFIED BY	B.F.BONYTLAR.	6/12/89
TRACED BY		
DESIGNED BY	D.E.DRYDEN.	6/10/89
QUANTITIES BY		
CHECKED BY	J. N. QUE	6/27/89
ORIGINAL PLAN	NOTE BOOK	NO.

2410V161 2410: V161 MS0045.FGB11 090CT89-11.27.50

FED. ROAD DIST. NO.	STATE	FED. AID PROJ. NO.	FISCAL YEAR	SHEET NO.	TOTAL SHEETS
HAWAII	HAW.	I-H3-1(66)	1992	32	440

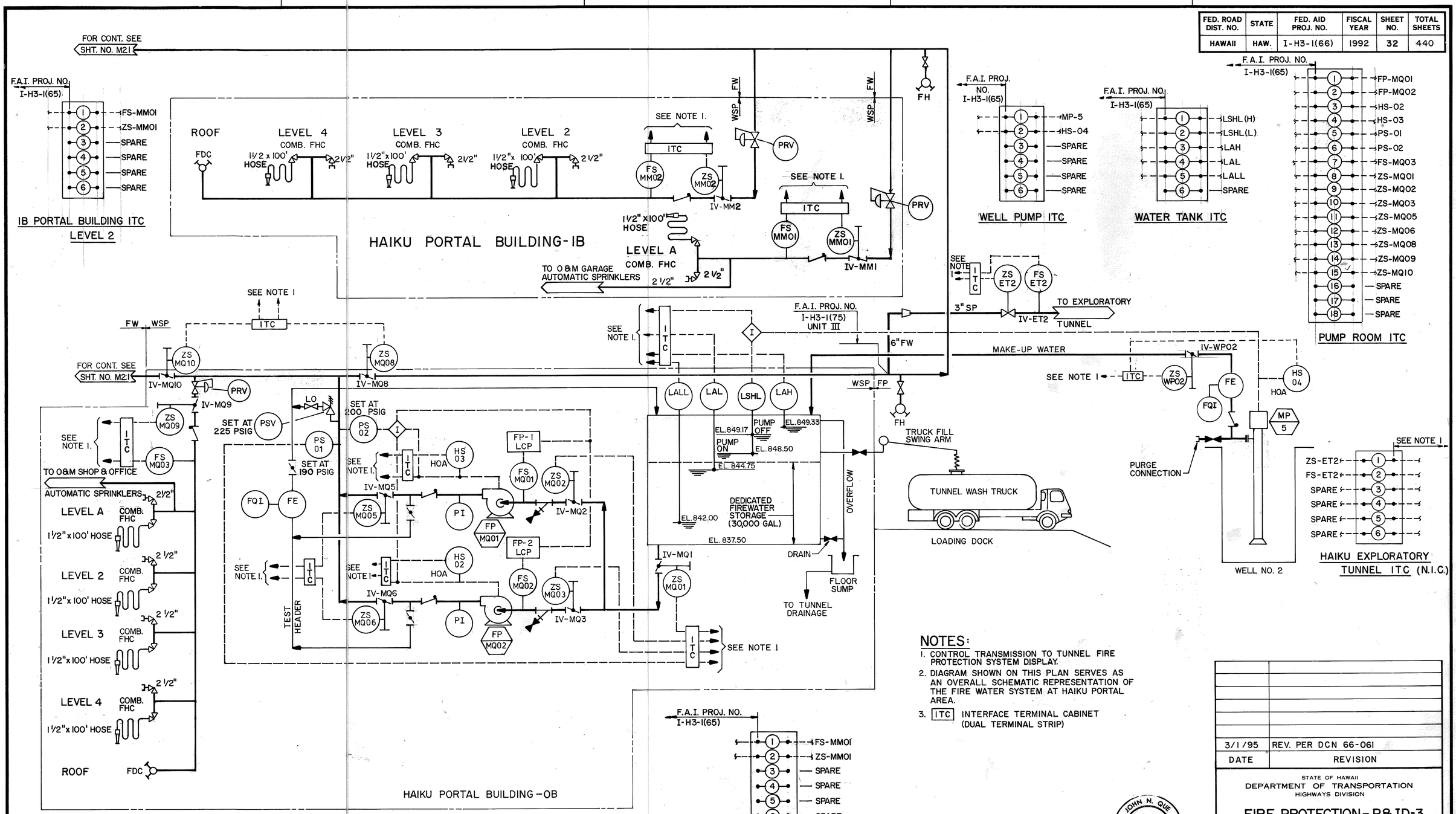

NOTES:

1. CONTROL TRANSMISSION TO TUNNEL FIRE PROTECTION SYSTEM DISPLAY.
2. DIAGRAM SHOWN ON THIS PLAN SERVES AS AN OVERALL SCHEMATIC REPRESENTATION OF THE FIRE WATER SYSTEM AT HAIKU PORTAL AREA.
3. ITC INTERFACE TERMINAL CABINET (DUAL TERMINAL STRIP)

DATE	REVISION
3/1/95	REV. PER DCN 66-061

STATE OF HAWAII
DEPARTMENT OF TRANSPORTATION
HIGHWAYS DIVISION

FIRE PROTECTION-P&ID-3

STANDARDS
INTERSTATE ROUTE H-3
F.A.I. PROJ. NO. I-H3-1(66)

SCALE: NONE DATE: APR 1992

SHEET NO. M22 OF 28 SHEETS

JOHN N. QUE
REGISTERED PROFESSIONAL ENGINEER
No. 8503-M
HAWAII, U.S.A.

THIS WORK WAS PREPARED BY ME OR UNDER MY SUPERVISION

		DATE
SURVEY PLOTTED BY		
DRAWN BY	B. E. BUNTI	4/26/88
TRACED BY		
DESIGNED BY	D.E. DRYDEN	4/3/89
QUANTITIES BY		
CHECKED BY	J.N. QUE	6/27/89

ORIGINAL PLAN

NOTE BOOK No.

FED. ROAD DIST. NO.	STATE	FED. AID PROJ. NO.	FISCAL YEAR	SHEET NO.	TOTAL SHEETS
HAWAII	HAW.	I-H3-1(66)	1992	33	440

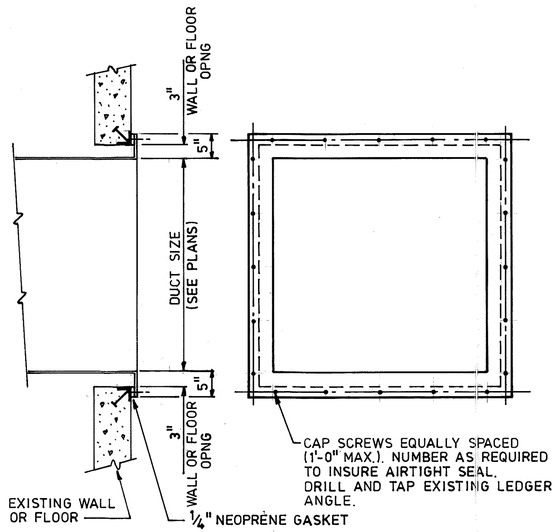

TYPICAL DUCT TO INTERIOR WALL OR FLOOR PENETRATION ATTACHMENT

DETAIL 1

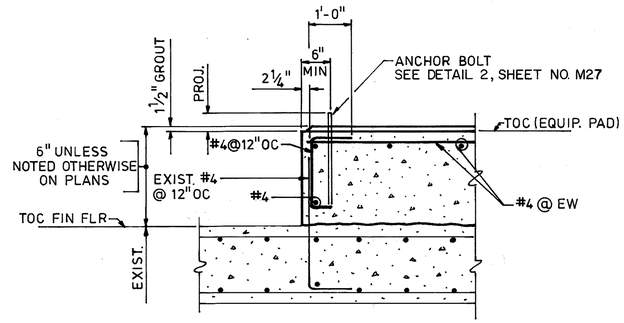

TYPICAL EQUIPMENT PAD

DETAIL 2

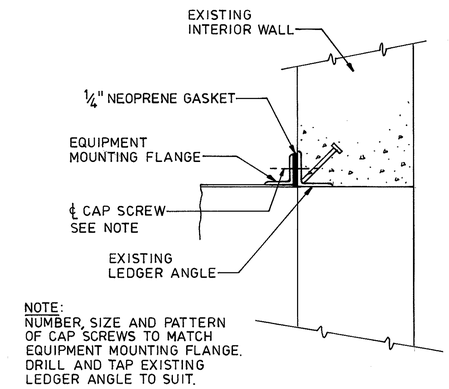

TYPICAL EQUIPMENT TO INTERIOR WALL MOUNTING DETAIL

DETAIL 3

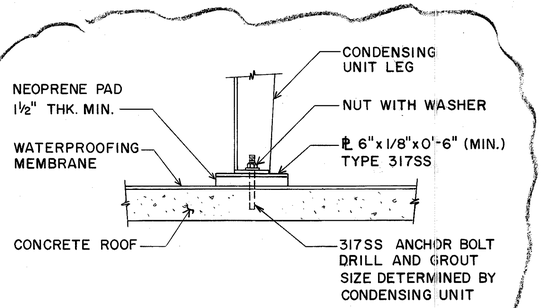

NOTES:

1. APPLY SILICONE SEALANT LIBRARY BETWEEN PAD AND MEMBRANE BEFORE SETTING CONDENSING UNIT.
2. SHIM AS REQUIRED, IN ADDITION TO THE 1/8" PLATE SHOWN, TO LEVEL UNIT

ROOF-MOUNTED CONDENSING UNIT INSTALLATION

DETAIL 4

ORIGINAL PLAN		DATE
	SURVEY PLOTTED BY	
	DRAWN BY D. E. DRYDEN	9/25/89
NOTE BOOK	TRACED BY	
	DESIGNED BY D. E. DRYDEN	9/22/89
No.	QUANTITIES BY	
	CHECKED BY J. N. QUE	05/01/90

DATE	REVISION
9/23/93	ADDED DETAIL PER DCN. 66-018

THIS WORK WAS PREPARED BY ME OR UNDER MY SUPERVISION

JOHN M. QUE REGISTERED PROFESSIONAL ENGINEER No. 6503-M HAWAII, U.S.A.

STATE OF HAWAII
DEPARTMENT OF TRANSPORTATION
HIGHWAYS DIVISION

HVAC-DETAILS-1

STANDARDS
INTERSTATE ROUTE H-3
F.A.I. PROJ. NO. I-H3-1(66)

SCALE: NONE DATE: APR 1992

SHEET NO. M23 OF 28 SHEETS

FED. ROAD DIST. NO.	STATE	FED. AID PROJ. NO.	FISCAL YEAR	SHEET NO.	TOTAL SHEETS
HAWAII	HAW.	I-H3-1(66)	1992	34	440

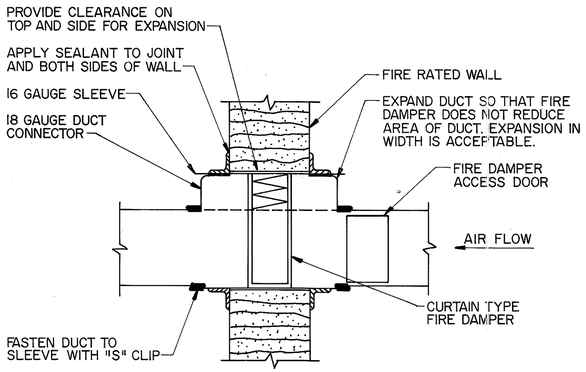

FIRE DAMPER IN DUCT AT FIRE RATED WALL

DETAIL 1

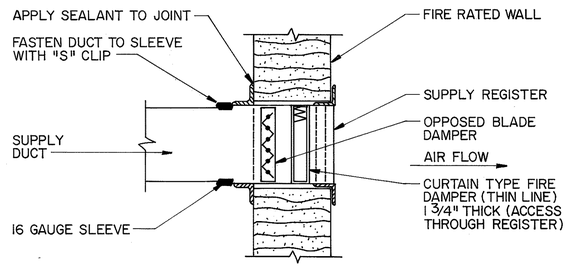

FIRE DAMPER AND SUPPLY REGISTER AT FIRE RATED WALL

DETAIL 2

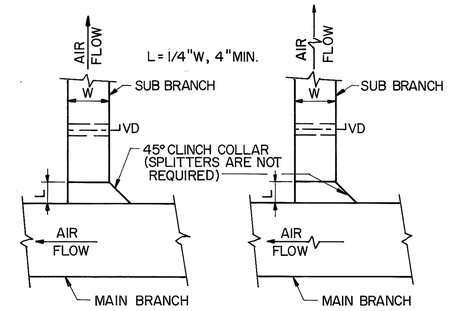

SUPPLY, RETURN AND EXHAUST DUCT BRANCH

DETAIL 3

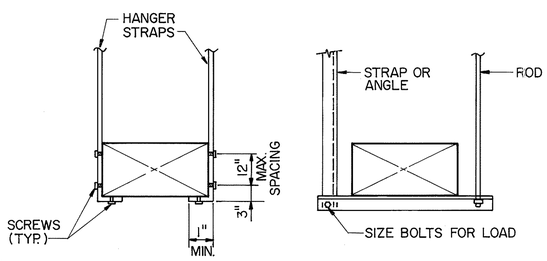

STRAP HANGERS

TRAPEZE HANGERS

HANGER ATTACHMENTS FOR RECTANGULAR DUCTS

DETAIL 4

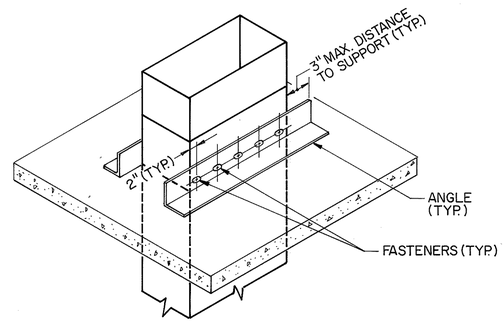

RISER SUPPORTS FROM FLOOR

DETAIL 5

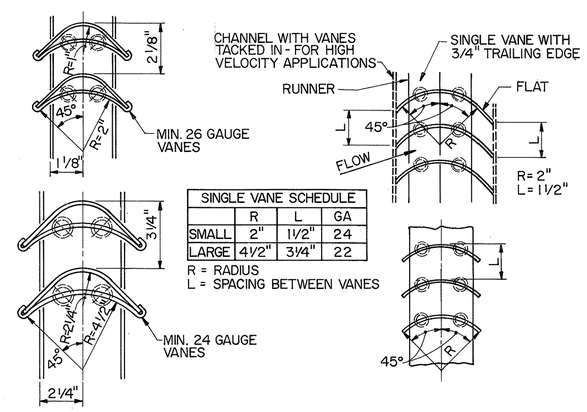

SINGLE VANE SCHEDULE			
	R	L	GA
SMALL	2"	1 1/2"	24
LARGE	4 1/2"	3 1/4"	22

R = RADIUS
L = SPACING BETWEEN VANES

TURNING VANES

DETAIL 6

JOHN M. GOO REGISTERED PROFESSIONAL ENGINEER No. 6508-S HAWAII, U.S.A.

THIS WORK WAS PREPARED BY ME OR UNDER MY SUPERVISION

DATE	REVISION

STATE OF HAWAII
DEPARTMENT OF TRANSPORTATION
HIGHWAYS DIVISION

HVAC - DETAILS 2

STANDARDS

INTERSTATE ROUTE H-3
F.A.I. PROJ. NO. I-H3-1(66)

SCALE: NONE DATE: APR 1992

SHEET NO. M24 OF 28 SHEETS

ORIGINAL PLAN		DATE
	SURVEY PLOTTED BY	
	DRAWN BY B. BUNYI	07/23/89
	TRACED BY	
	REVISED BY	
	DESIGNED BY A. H. PORTIER	07/13/89
NOTE BOOK	QUANTITIES BY	
No.	CHECKED BY J. N. QUE	06/05/90

FED. ROAD DIST. NO.	STATE	FED. AID PROJ. NO.	FISCAL YEAR	SHEET NO.	TOTAL SHEETS
HAWAII	HAW.	I-H3-1(66)	1992	35	440

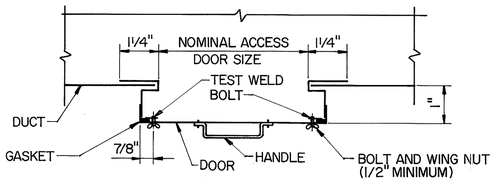

TYPE – 1

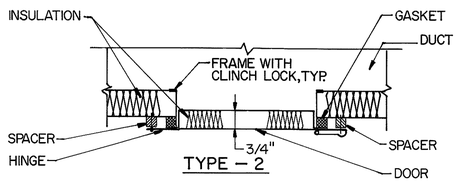

TYPE – 2

DUCT ACCESS DOORS

DETAIL 7

ORIGINAL PLAN	SURVEY PLOTTED BY	DATE
	DRAWN BY B. BUNYI	02/16/93
NOTE BOOK	TRACED BY	"
	DESIGNED BY A. H. PORTIER	04/11/89
	QUANTITIES BY	"
No.	CHECKED BY J. N. QUE	06/07/90

THIS WORK WAS PREPARED BY ME OR UNDER MY SUPERVISION

JOHN N. QUE REGISTERED PROFESSIONAL ENGINEER No. 6509-M HAWAII, U.S.A.

DATE	REVISION

STATE OF HAWAII
DEPARTMENT OF TRANSPORTATION
HIGHWAYS DIVISION

HVAC - DETAILS 3

STANDARDS

INTERSTATE ROUTE H-3
F.A.I. PROJ. NO. I-H3-1(66)

SCALE: NONE DATE: APR. 1992

SHEET NO. M25 OF 28 SHEETS

FED. ROAD DIST. NO.	STATE	FED. AID PROJ. NO.	FISCAL YEAR	SHEET NO.	TOTAL SHEETS
HAWAII	HAW.	I-H3-1(66)	1992	36	440

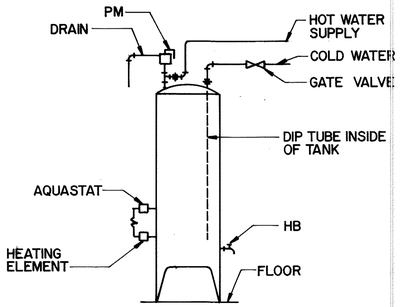

ELECTRIC WATER HEATER WH-1

DETAIL 1 / M26

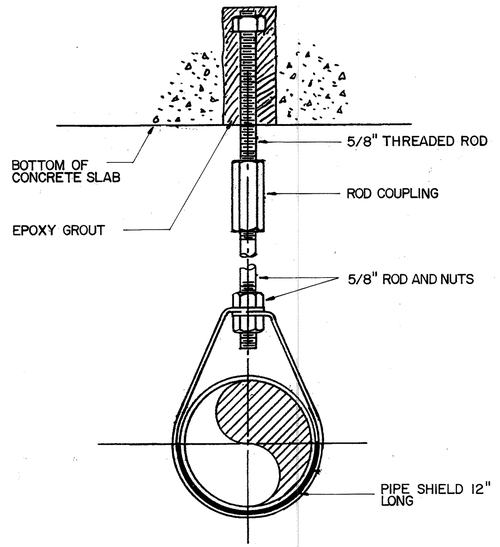

PIPE SUPPORT

DETAIL 2 / M26

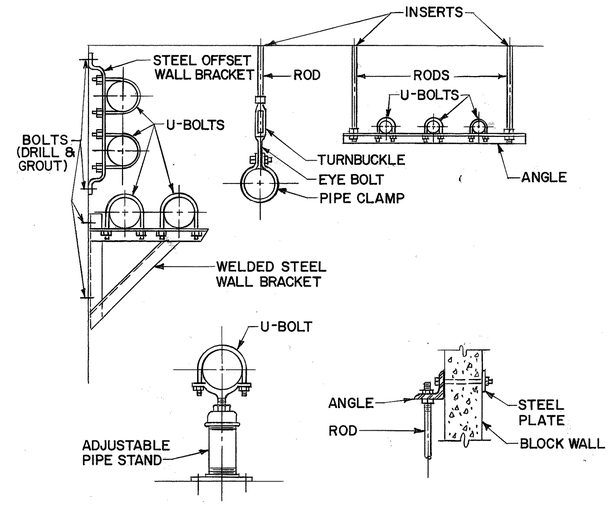

TYPICAL PIPE SUPPORTS

DETAIL 3 / M26

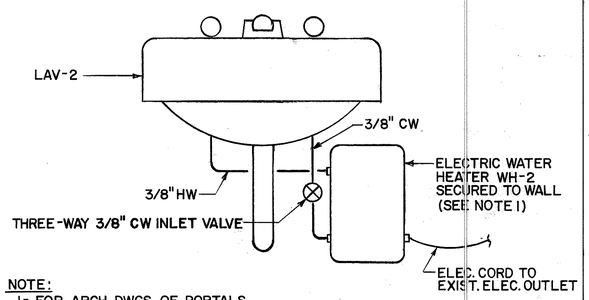

NOTE:
1- FOR ARCH. DWGS. OF PORTALS TOILET ROOMS LOCATIONS SEE SHTS. AN1, A02, AM1 & AQ1

ELECTRIC WATER HEATER WH-2

DETAIL 4 / M26

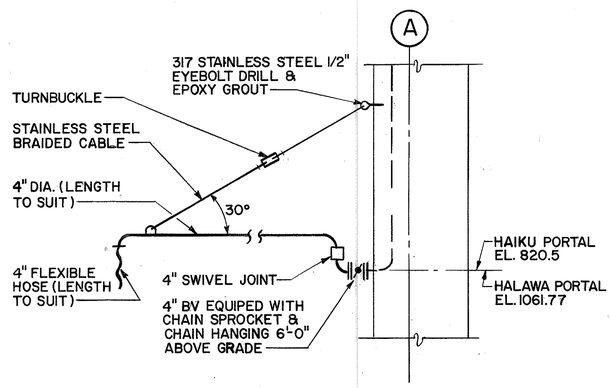

TRUCK WASH SWIVEL ARM

DETAIL 5 / MN6 M26 / MQ6

ORIGINAL PLAN		DATE
SURVEY PLOTTED BY	P.L.LALOUE	01/11/90
DRAWN BY		
TRACED BY		
DESIGNED BY	P.L.LALOUE	01/9/90
QUANTITIES BY		
CHECKED BY	J. N. QUE	06/05/90
NOTE BOOK		
No.		

DATE	REVISION

THIS WORK WAS PREPARED BY ME OR UNDER MY SUPERVISION

JOHN M. QUE REGISTERED PROFESSIONAL ENGINEER No. 6503-M HAWAII, U.S.A.

STATE OF HAWAII
DEPARTMENT OF TRANSPORTATION
HIGHWAYS DIVISION

PLUMBING - DETAILS I

STANDARDS

INTERSTATE ROUTE H-3
F.A.I. PROJ. NO. I-H3-1(66)

SCALE: NO SCALE DATE: APR 1992

SHEET NO. M26 OF 28 SHEETS

FED. ROAD DIST. NO.	STATE	FED. AID PROJ. NO.	FISCAL YEAR	SHEET NO.	TOTAL SHEETS
HAWAII	HAW.	I-H3-1(66)	1992	37	440

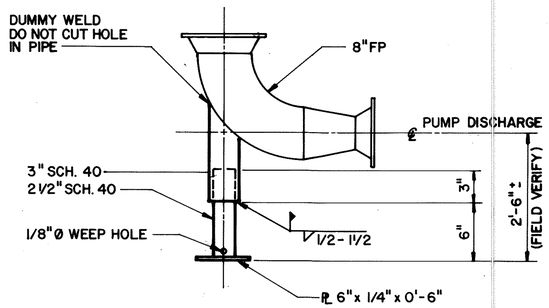

FIRE PUMP DISHARGE PIPE SUPPORT DETAIL 1 — M27

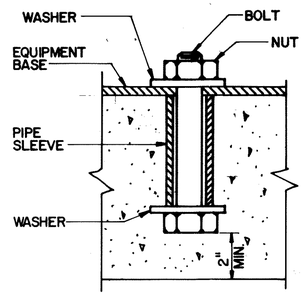

BOLT SIZE	PIPE SIZE SCH 40 I.D.	MIN. LGTH.	AM. STD. FLAT WSHR. O.D.	GA.
3/8	1/2	4	1 3/8	12
1/2	3/4	6	1 3/8	12
5/8	3/4	6	1 3/4	10
3/4	1	6	2	9
7/8	1	6	2	8
1	1 1/4	8	2 1/4	8

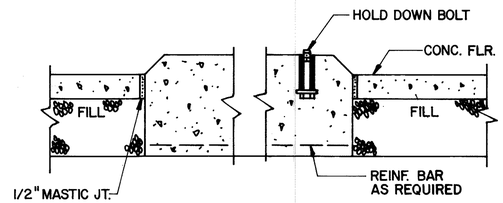

EQUIPMENT FOUNDATION 2 — M27

DATE	REVISION

STATE OF HAWAII
DEPARTMENT OF TRANSPORTATION
HIGHWAYS DIVISION

PLUMBING - DETAILS 2

STANDARDS

INTERSTATE ROUTE H-3
F.A.I. PROJ. NO. I-H3-1 (66)

SCALE : NO SCALE DATE: APR 1992

SHEET NO. M27 OF 28 SHEETS

JOHN N. QUE
REGISTERED PROFESSIONAL ENGINEER
No. 8503-M
HAWAII, U.S.A.

THIS WORK WAS PREPARED BY ME OR UNDER MY SUPERVISION

ORIGINAL PLAN		DATE
	SURVEY PLOTTED BY	
	DRAWN BY R. BUNYI, JR.	11/9/89
NOTE BOOK	TRACED BY	
	DESIGNED BY D. E. DRYDEN	11/1/89
	QUANTITIES BY	
No.	CHECKED BY J. N. QUE	06/05/90

FED. ROAD DIST. NO.	STATE	FED. AID PROJ. NO.	FISCAL YEAR	SHEET NO.	TOTAL SHEETS
HAWAII	HAW.	I-H3-1(66)	1992	38	440

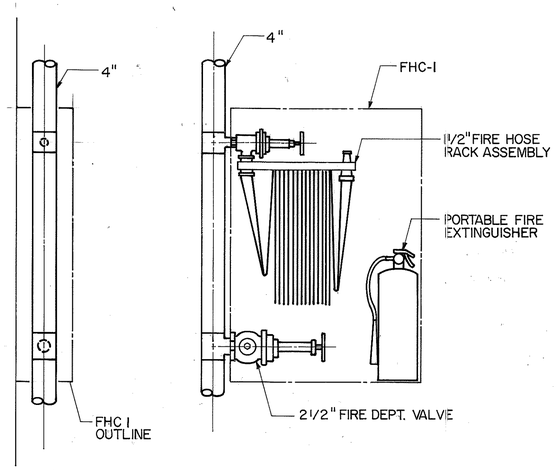

FIRE HOSE ASSEMBLY FHC-1 DETAIL (1)
N.T.S.

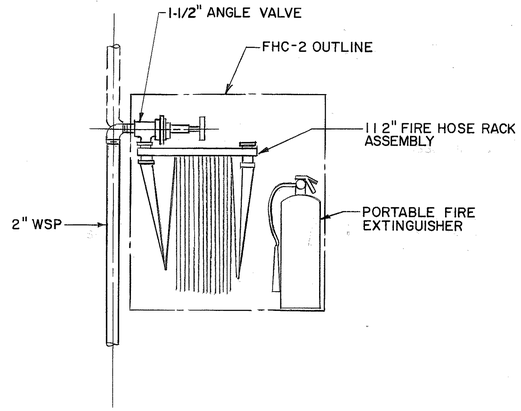

FIRE HOSE ASSEMBLY FHC-2 DETAIL (2)
N.T.S.

ORIGINAL PLAN	SURVEY PLOTTED BY	DATE
	DRAWN BY B.F.BUNYI, JR.	12/26/89
NOTE BOOK	TRACED BY	
	DESIGNED BY P.L.LALOUE	12/21/89
	QUANTITIES BY	
No.	CHECKED BY J.N.QUE	06/05/90

JOHN N. QUE
REGISTERED PROFESSIONAL ENGINEER
No. 6503-M
HAWAII, U.S.A.

THIS WORK WAS PREPARED BY ME OR UNDER MY SUPERVISION

STATE OF HAWAII
DEPARTMENT OF TRANSPORTATION
HIGHWAYS DIVISION

FIRE PROTECTION
DETAILS
STANDARDS

INTERSTATE ROUTE H-3
F.A.I. PROJ. NO. I-H3-1(66)

SCALE: NO SCALE DATE: APR 1992

SHEET NO. M28 OF 28 SHEETS

FED. ROAD DIST. NO.	STATE	FED. AID PROJ. NO.	FISCAL YEAR	SHEET NO.	TOTAL SHEETS
HAWAII	HAW.	I-H3-1(66)	1992	39	440

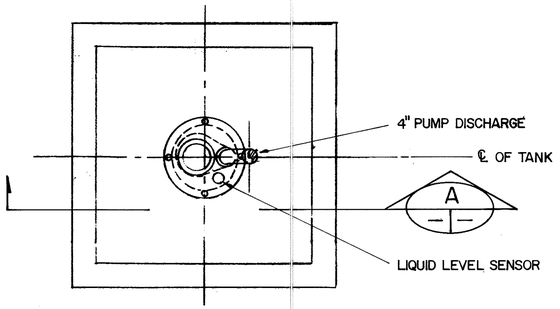

PLAN
SCALE: 3/4"=1'-0"

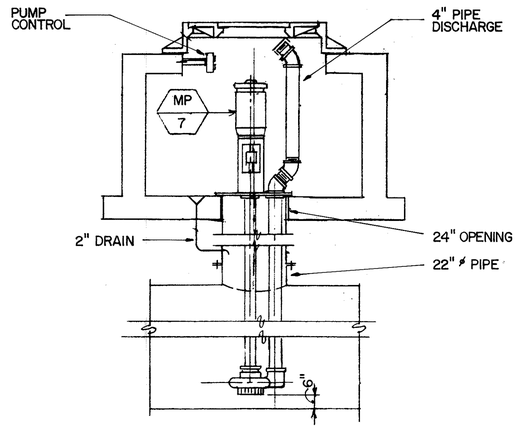

SECTION A
SCALE: 3/4"=1'-0"

GRAPHIC SCALE
1' 0 1' 2' 3' 4'
3/4"=1'-0"

FOR DETAIL AS-BUILT INFORMATION
REFER TO CONSTRUCTION SUBMITTALS

DATE	REVISION

JOHN N. GUE
REGISTERED PROFESSIONAL ENGINEER
No. 6503-M
HAWAII, U.S.A.

THIS WORK WAS PREPARED BY ME
OR UNDER MY SUPERVISION

STATE OF HAWAII
DEPARTMENT OF TRANSPORTATION
HIGHWAYS DIVISION

PLUMBING - DRAINAGE
TRANSFER PUMP PLAN & SECTION

HALAWA APPROACH
INTERSTATE ROUTE H-3
F.A.I. PROJ. NO. I-H3-1(66)

SCALE: AS NOTED DATE: APR 1992

SHEET NO. MA1 OF 2 SHEETS

ORIGINAL PLAN			
NOTE BOOK	SURVEY PLOTTED BY		DATE
	DRAWN BY	P. L. LALOUE	12/07/89
	TRACED BY		
	DESIGNED BY	P. L. LALOUE	11/14/89
	QUANTITIES BY		
No.	CHECKED BY	J. N. GUE	06/04/90

FED. ROAD DIST. NO.	STATE	FED. AID PROJ. NO.	FISCAL YEAR	SHEET NO.	TOTAL SHEETS
HAWAII	HAW.	I-H3-1(66)	1992	40	440

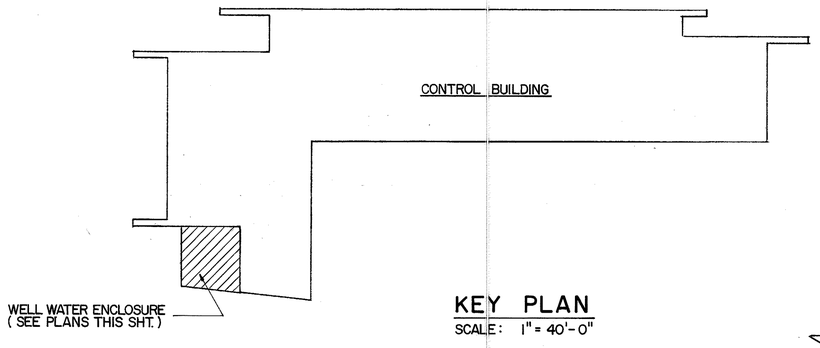

KEY PLAN
SCALE: 1" = 40'-0"

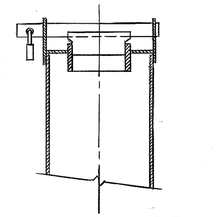

DETAIL 1
N.T.S.

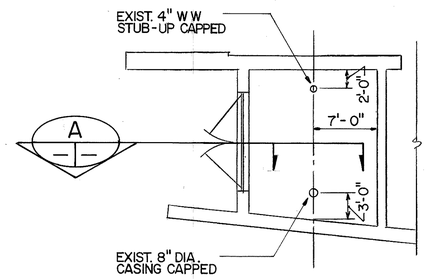

EXIST. WATER WELL ENCLOSURE PLAN
SCALE: 1/8" = 1'-0"

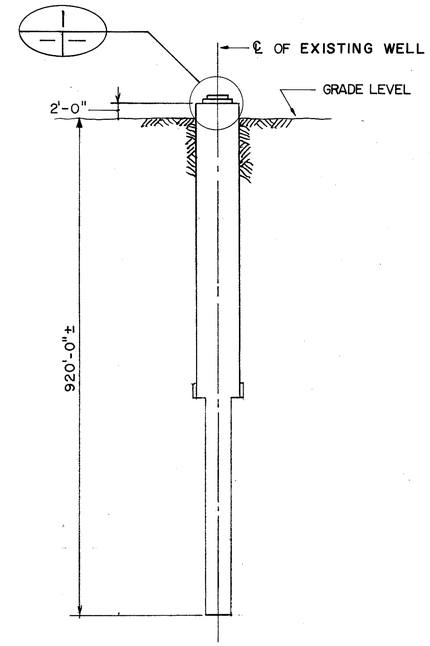

SECTION A
N.T.S.

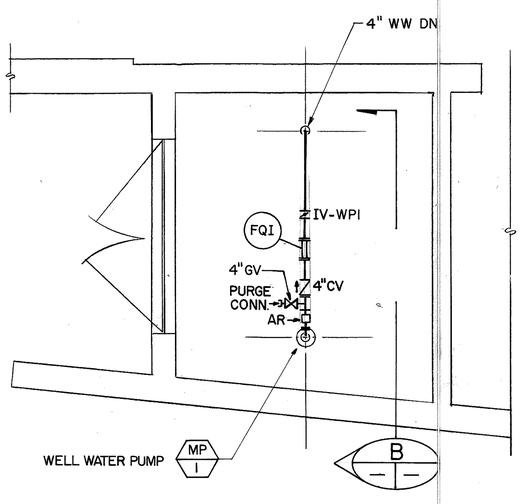

WELL WATER PUMP & PIPING PLAN
SCALE: 1/4" = 1'-0"

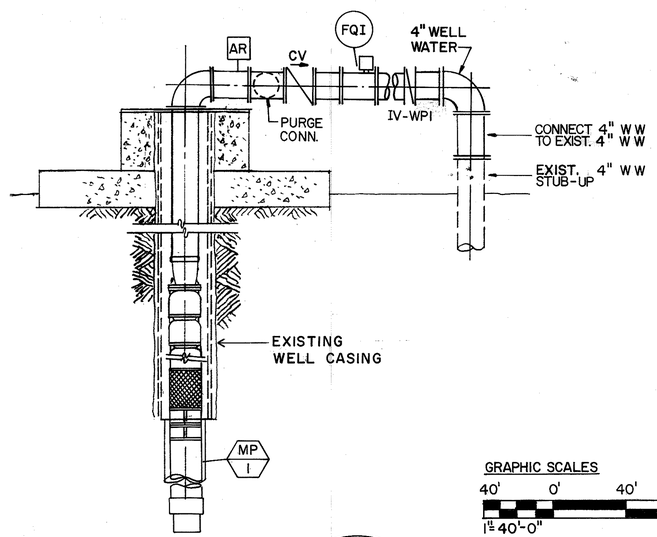

SECTION B
N.T.S.

GRAPHIC SCALES

40' 0' 40' 80'
1" = 40'-0"

4' 0' 4' 8'
1/4" = 1'-0"

8' 0' 8' 16'
1/8" = 1'-0"

ORIGINAL PLANS		DATE
SURVEY PLOTTED BY		
DRAWN BY	P.L.I. ALOUE	01/4/90
TRACED BY	" "	" "
DESIGNED BY	P.L.I. ALOUE	01/3/90
QUANTITIES BY	" "	" "
CHECKED BY	J. N. QUE	06/1/90
NOTE BOOK		
No.		

DATE	REVISION

STATE OF HAWAII
DEPARTMENT OF TRANSPORTATION
HIGHWAYS DIVISION

PLUMBING - WELL WATER PUMP
PLAN & SECTION
HALAWA APPROACH
INTERSTATE ROUTE H-3
F. A. I. PROJ. NO. I-H3-1 (66)

SCALE: AS NOTED DATE: APR 1992

SHEET NO. MA2 OF 2 SHEETS

JOHN N. QUE
REGISTERED PROFESSIONAL ENGINEER
No. 6503-M
HAWAII, U.S.A.

THIS WORK WAS PREPARED BY ME OR UNDER MY SUPERVISION

FED. ROAD DIST. NO.	STATE	FED. AID PROJ. NO.	FISCAL YEAR	SHEET NO.	TOTAL SHEETS
HAWAII	HAW.	I-H3-1(66)	1992	41	440

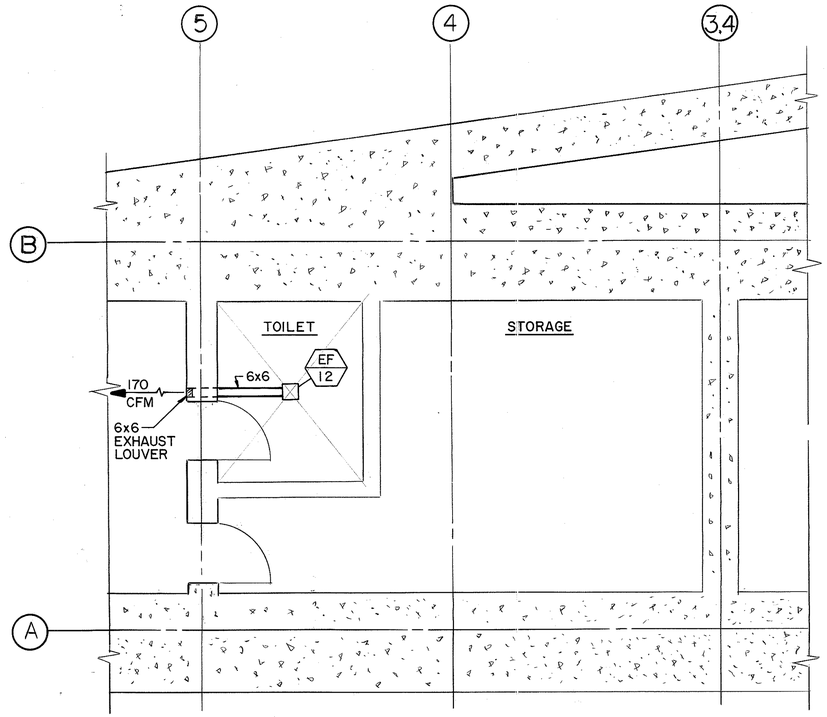

LEVEL 1 PARTIAL PLAN

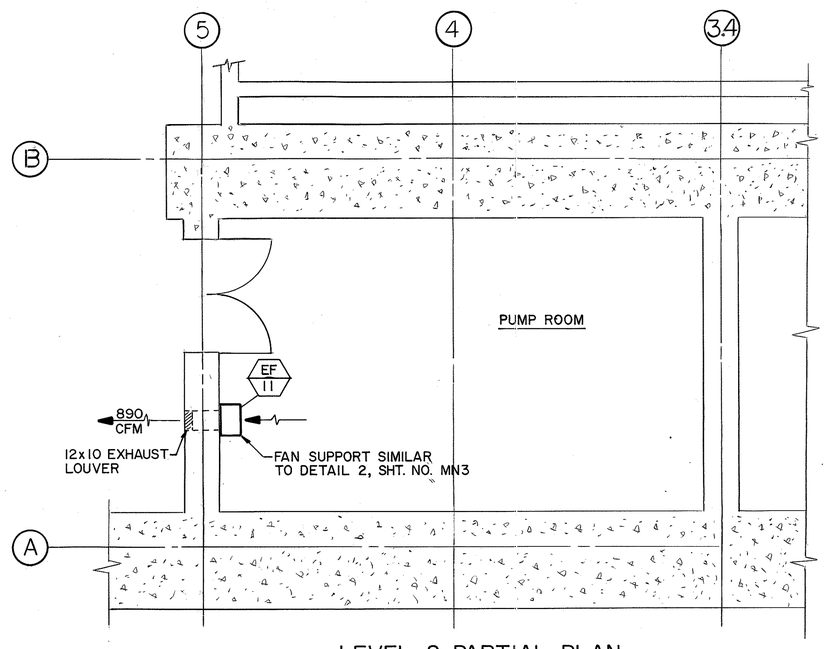

LEVEL 2 PARTIAL PLAN

ORIGINAL PLAN		DATE
	SURVEY PLOTTED BY R. ANG	5/15/90
	DRAWN BY " "	"
NOTE BOOK	TRACED BY " "	"
	DESIGNED BY D. E. DRYDEN	4/10/90
	QUANTITIES BY " "	"
No.	CHECKED BY J. N. QUE	6/11/90

FOR DETAIL AS-BUILT INFORMATION
REFER TO CONSTRUCTION SUBMITTALS

DATE	REVISION

STATE OF HAWAII
DEPARTMENT OF TRANSPORTATION
HIGHWAYS DIVISION

HVAC – LEVEL 1 & LEVEL 2 PARTIAL PLANS

HALAWA PORTAL BUILDING – IB
INTERSTATE ROUTE H-3
F.A.I. PROJ. NO. I-H3-1(66)

SCALE: 1/4" = 1'-0" DATE: APR 1992

SHEET NO. MN1 OF 8 SHEETS

GRAPHIC SCALE
1' 0 1' 2' 3' 4' 5'
1/4" = 1'-0"

JOHN N. QUE
REGISTERED PROFESSIONAL ENGINEER
No. 9503-M
HAWAII, U.S.A.

THIS WORK WAS PREPARED BY ME
OR UNDER MY SUPERVISION

FED. ROAD DIST. NO.	STATE	FED. AID PROJ. NO.	FISCAL YEAR	SHEET NO.	TOTAL SHEETS
HAWAII	HAW.	I-H3-1(66)	1992	42	440

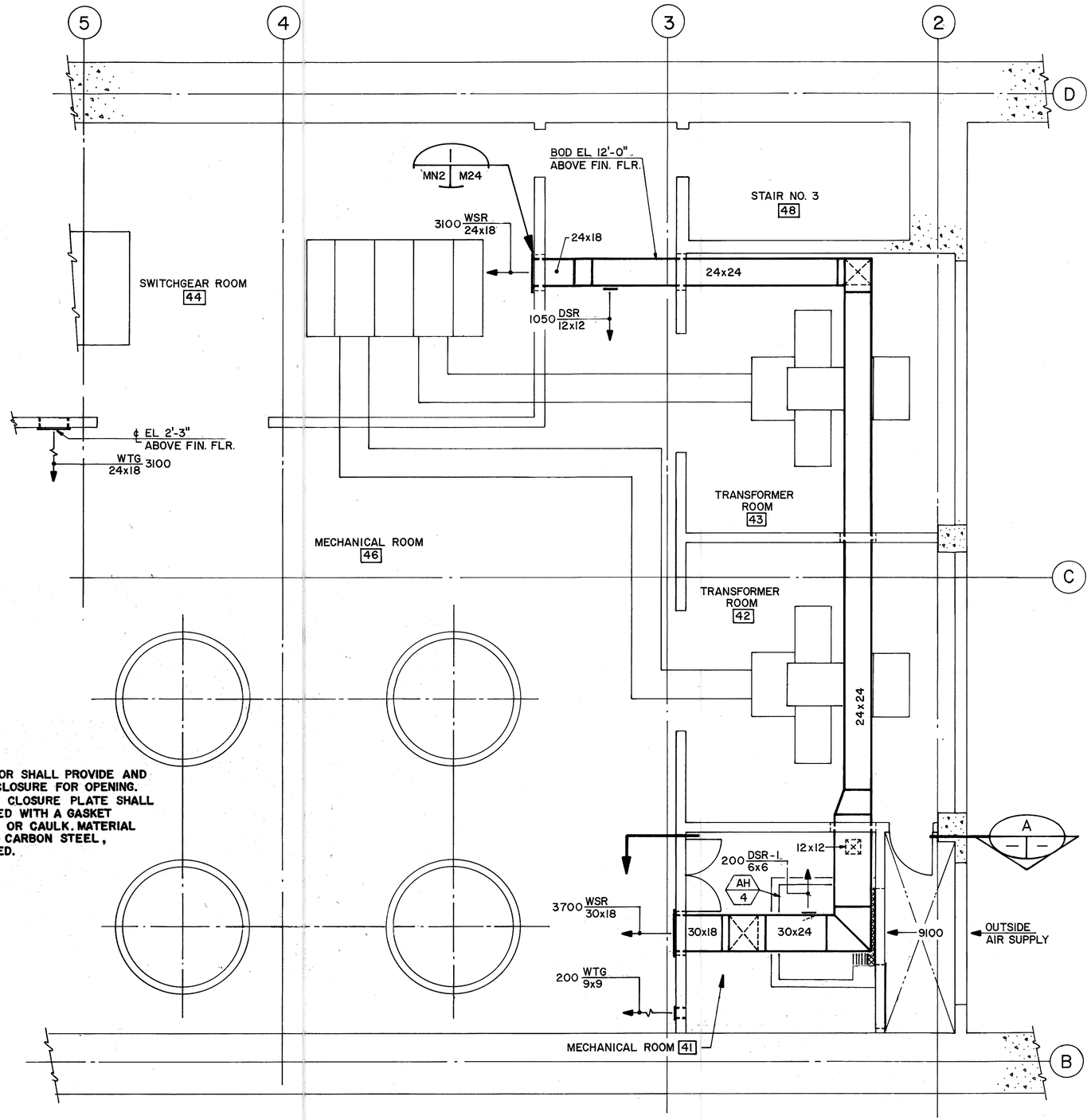

NOTE:
CONTRACTOR SHALL PROVIDE AND INSTALL CLOSURE FOR OPENING. EDGES OF CLOSURE PLATE SHALL BE SEALED WITH A GASKET MATERIAL OR CAULK. MATERIAL SHALL BE CARBON STEEL, GALVANIZED.

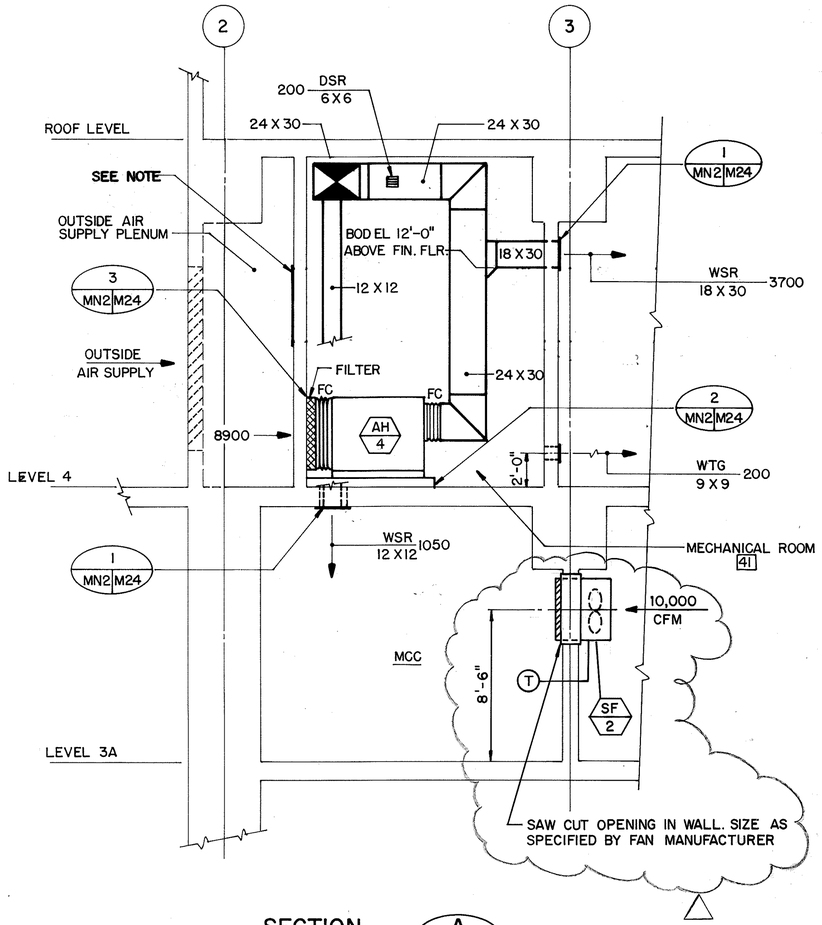

SECTION A

DATE	REVISION
3/8/94	REV. SECT 'A', ADDED SF PER
	DCN 66-039
5/13/93	DELETED AUX. COOLING FANS & ASSOC.
	DUCTWORK PER DCN 66-004

JOHN N. QUE
REGISTERED PROFESSIONAL ENGINEER
No. 6503-M
HAWAII, U.S.A.

THIS WORK WAS PREPARED BY ME OR UNDER MY SUPERVISION

STATE OF HAWAII
DEPARTMENT OF TRANSPORTATION
HIGHWAYS DIVISION

HVAC — LEVEL 4

PARTIAL PLAN AND SECTION

HALAWA PORTAL BUILDING — IB

INTERSTATE ROUTE H-3

F.A.I. PROJ. NO. I-H3-1(66)

SCALE: 1/4"=1'-0" DATE: APR 1992

SHEET NO. MN2 OF 8 SHEETS

		DATE
ORIGINAL PLAN	SURVEY PLOTTED BY	
	DRAWN BY B. BUNYI	02/16/90
	TRACED BY	
	DESIGNED BY D. DRYDEN	01/17/90
NOTE BOOK	QUANTITIES BY	
	CHECKED BY J.N. QUE	06/07/90
No.		

FED. ROAD DIST. NO.	STATE	FED. AID PROJ. NO.	FISCAL YEAR	SHEET NO.	TOTAL SHEETS
HAWAII	HAW.	I-H3-1(66)	1992	43	440

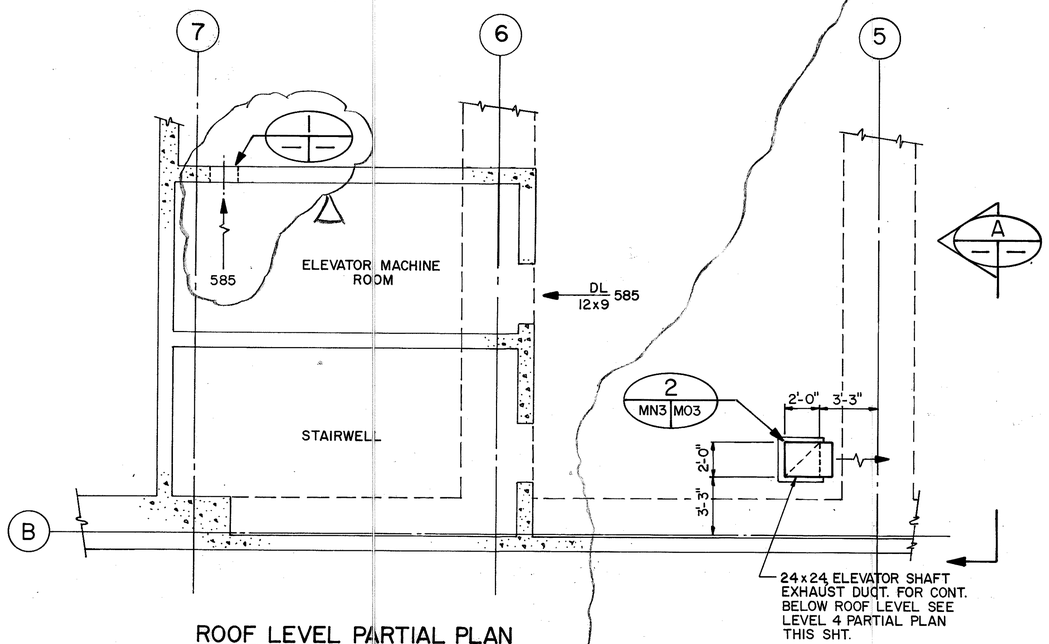

ROOF LEVEL PARTIAL PLAN
SCALE: 1/4"=1'-0"

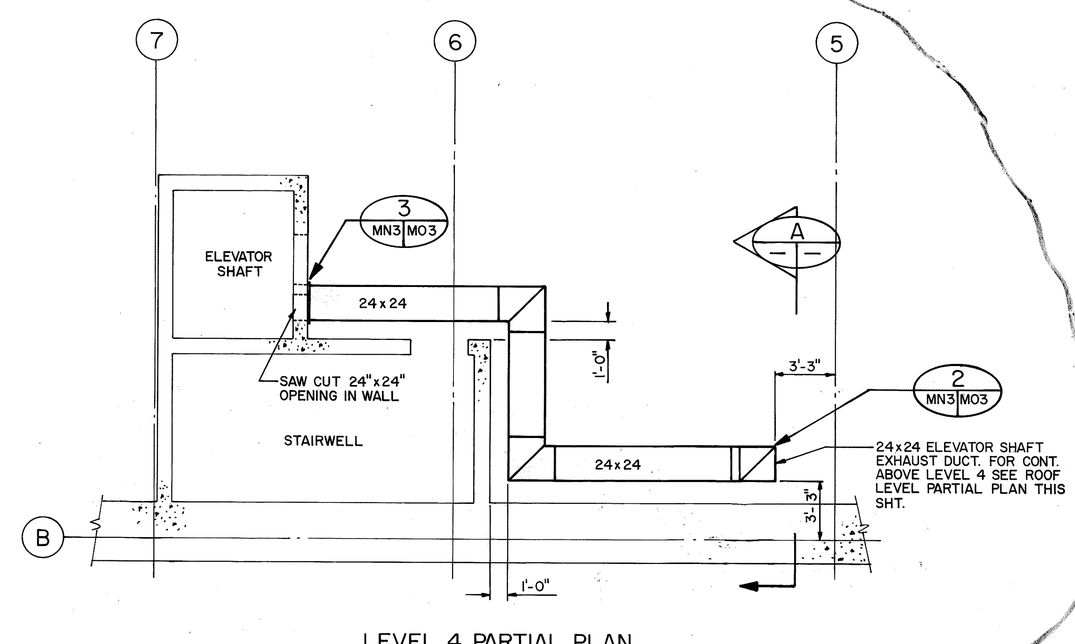

LEVEL 4 PARTIAL PLAN
SCALE: 1/4"=1'-0"

NOTE:
FOR SAW CUT OPENINGS-BUSH HAMMER EXPOSED EDGES TO EVEN SURFACE, GRIND SMOOTH. PAINT EDGES OF OPENINGS AND EXPOSED REBAR WITH EPOXY PAINT.

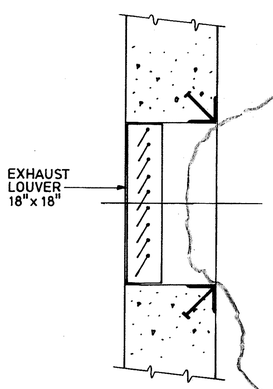

DETAIL 1
NO SCALE

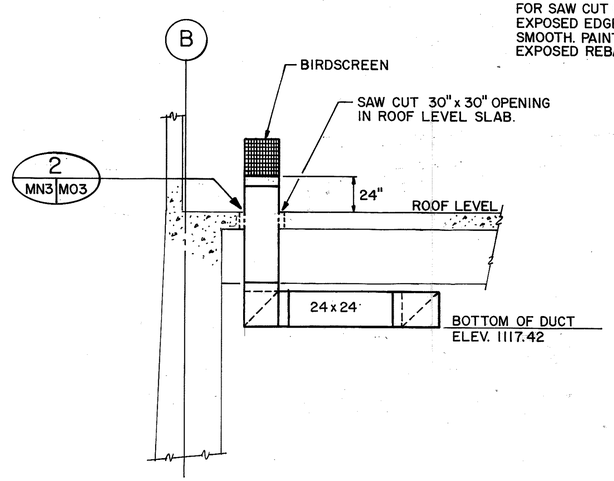

SECTION A
SCALE: 1/4"=1'-0"

8/15/94	REV. PER DCN 66-052
DATE	REVISION

STATE OF HAWAII
DEPARTMENT OF TRANSPORTATION
HIGHWAYS DIVISION

HVAC-ELEVATOR EQUIPMENT ROOM PLAN AND DETAILS

HALAWA PORTAL BUILDING-1B

INTERSTATE ROUTE H-3
F.A.I. PROJ. NO. I-H3-1(66)

SCALE: AS NOTED DATE: APR 1992

SHEET NO. MN3 OF 8 SHEETS

JOHN N. QUE
REGISTERED PROFESSIONAL ENGINEER
No. 6503-M
HAWAII, U.S.A.

THIS WORK WAS PREPARED BY ME OR UNDER MY SUPERVISION

ORIGINAL PLAN	SHEETS PREPARED BY	D. E. DRYDEN DATE 12/14/89
	DRAWN BY	
	TRACED BY	D. E. DRYDEN 12/06/89
	DESIGN ENGR.	
	QUANTITIES BY	
	MECHANICAL CHIEF	J. N. QUE 05/05/90
NOTE HOOKS	No.	

FED. ROAD DIST. NO.	STATE	FED. AID PROJ. NO.	FISCAL YEAR	SHEET NO.	TOTAL SHEETS
HAWAII	HAW.	I-H3-1(66)	1992	44	440

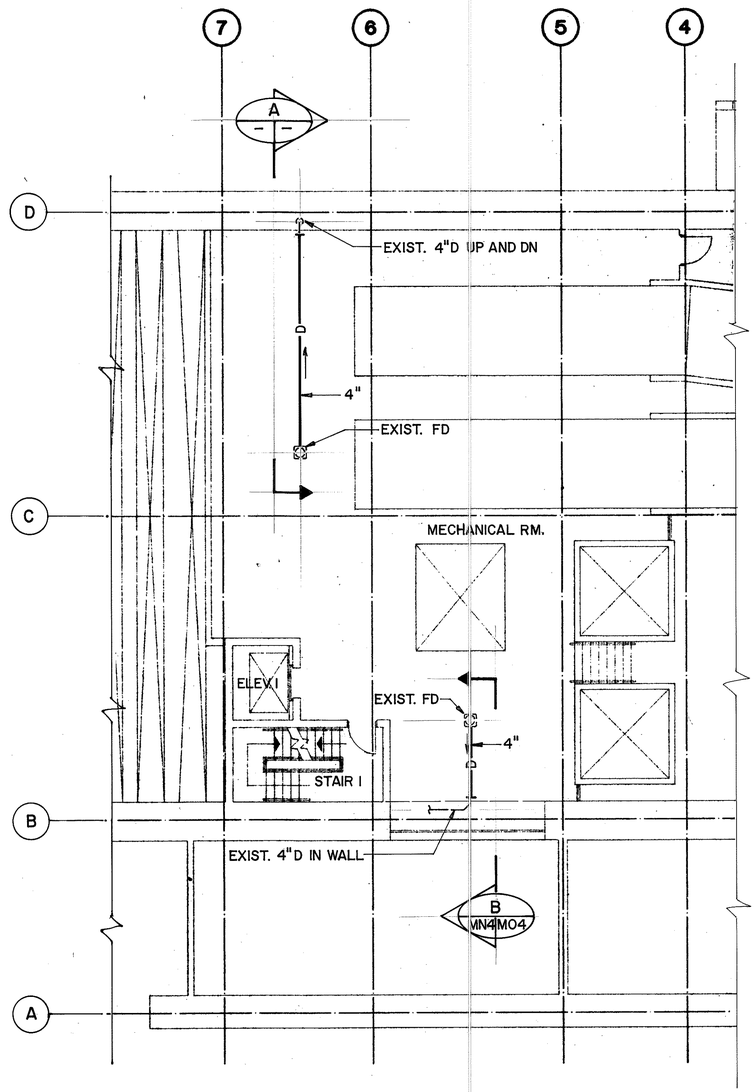

LEVEL 3 PARTIAL PLAN

SCALE: 1/8" = 1'-0"

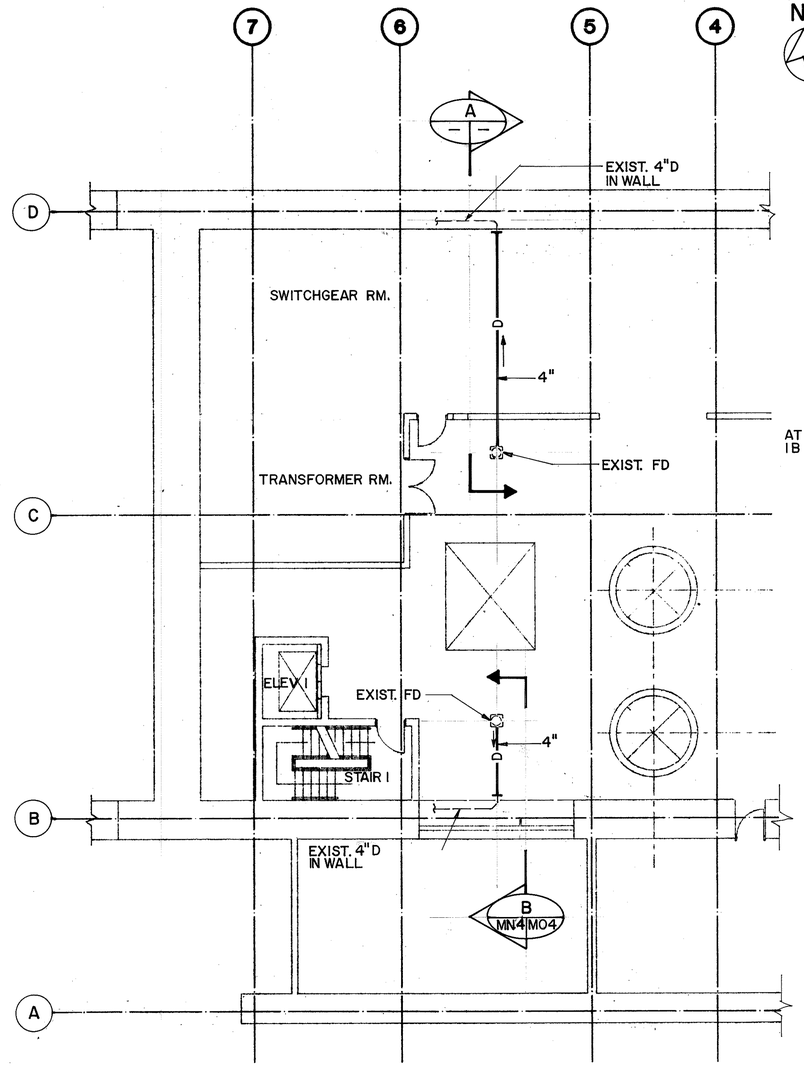

LEVEL 4 PARTIAL PLAN

SCALE: 1/8" = 1'-0"

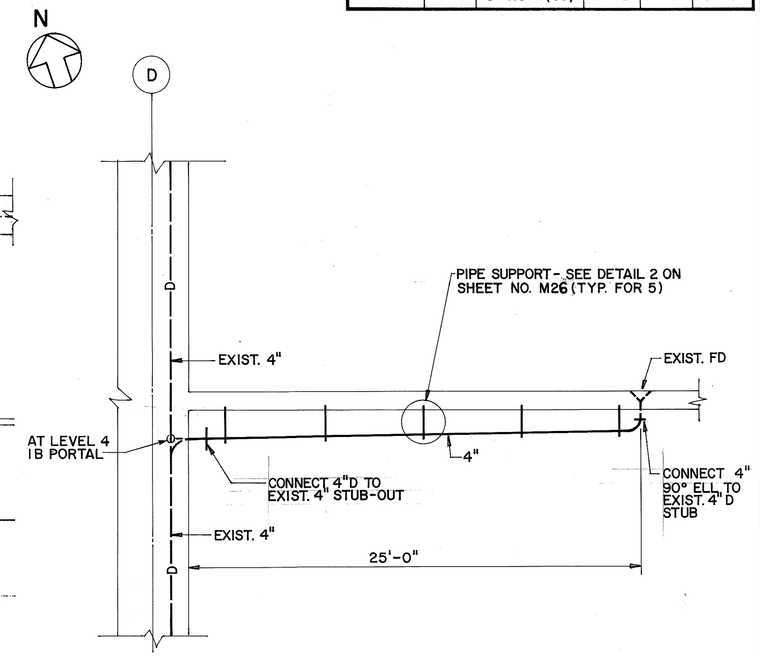

SECTION A

SCALE: 1/4" = 1'-0"

MN4 MN4 MO4

FOR DETAIL AS-BUILT INFORMATION
REFER TO CONSTRUCTION SUBMITTALS

GRAPHIC SCALES

4' 0' 4' 8'

1/4" = 1'-0"

8' 0' 8' 16'

1/8" = 1'-0"

ORIGINAL PLAN		DATE
	SURVEY PLOTTED BY	
	DRAWN BY B. BUNYI	01/16/90
NOTE BOOK	TRACED BY P. L. LALOUE	01/06/90
	DESIGNED BY	
	QUANTITIES BY	
No.	CHECKED BY J. N. QUE	05/04/90

JOHN N. QUE
REGISTERED PROFESSIONAL ENGINEER
No. 6503-M
HAWAII, U.S.A.

THIS WORK WAS PREPARED BY ME OR UNDER MY SUPERVISION

John N Que

DATE	REVISION

STATE OF HAWAII
DEPARTMENT OF TRANSPORTATION
HIGHWAYS DIVISION

PLUMBING - LEVEL 3 & LEVEL 4 PARTIAL PLANS

HALAWA PORTAL BUILDING - IB

INTERSTATE ROUTE H-3
F.A.I. PROJ. NO. I-H3-1(66)

SCALE: AS NOTED DATE: APR 1992

SHEET NO. MN4 OF 8 SHEETS

FED. ROAD DIST. NO.	STATE	FED. AID PROJ. NO.	FISCAL YEAR	SHEET NO.	TOTAL SHEETS
HAWAII	HAW.	I-H3-1(66)	1992	45	440

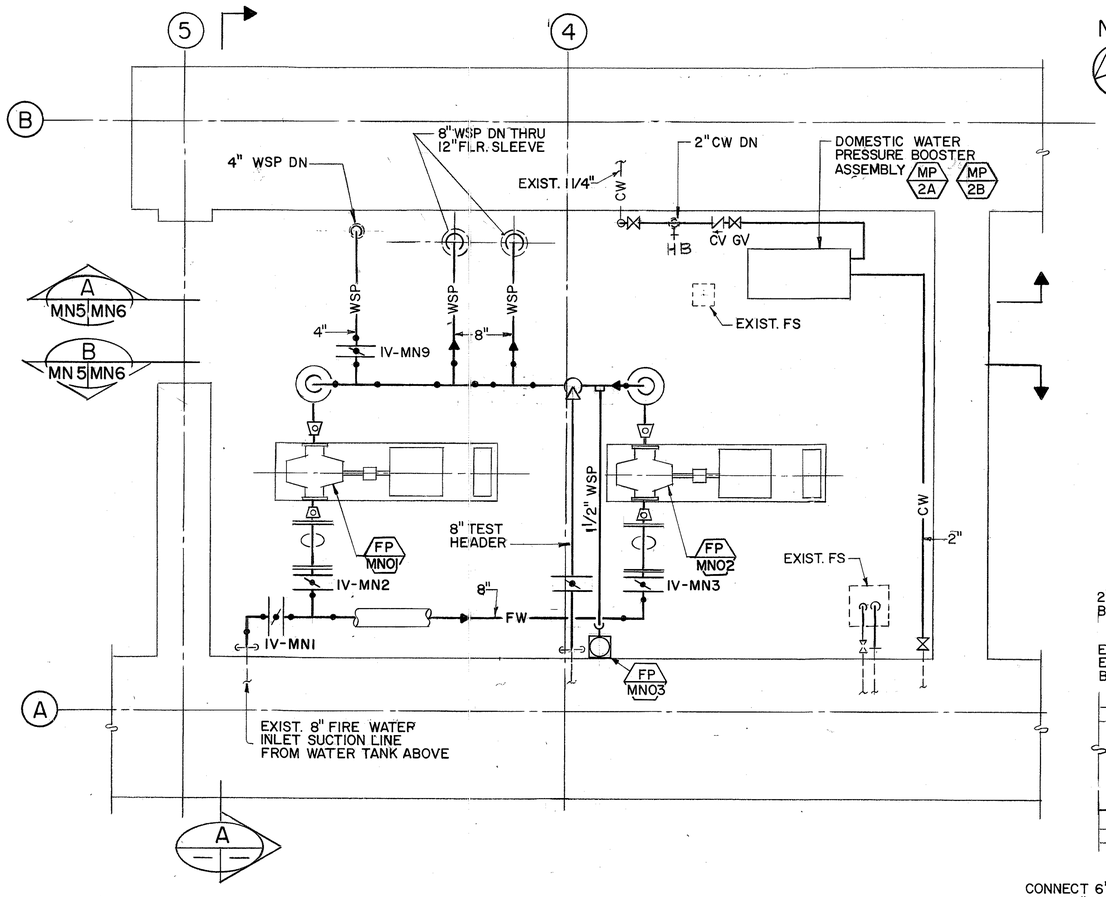

PUMP ROOM PARTIAL PLAN

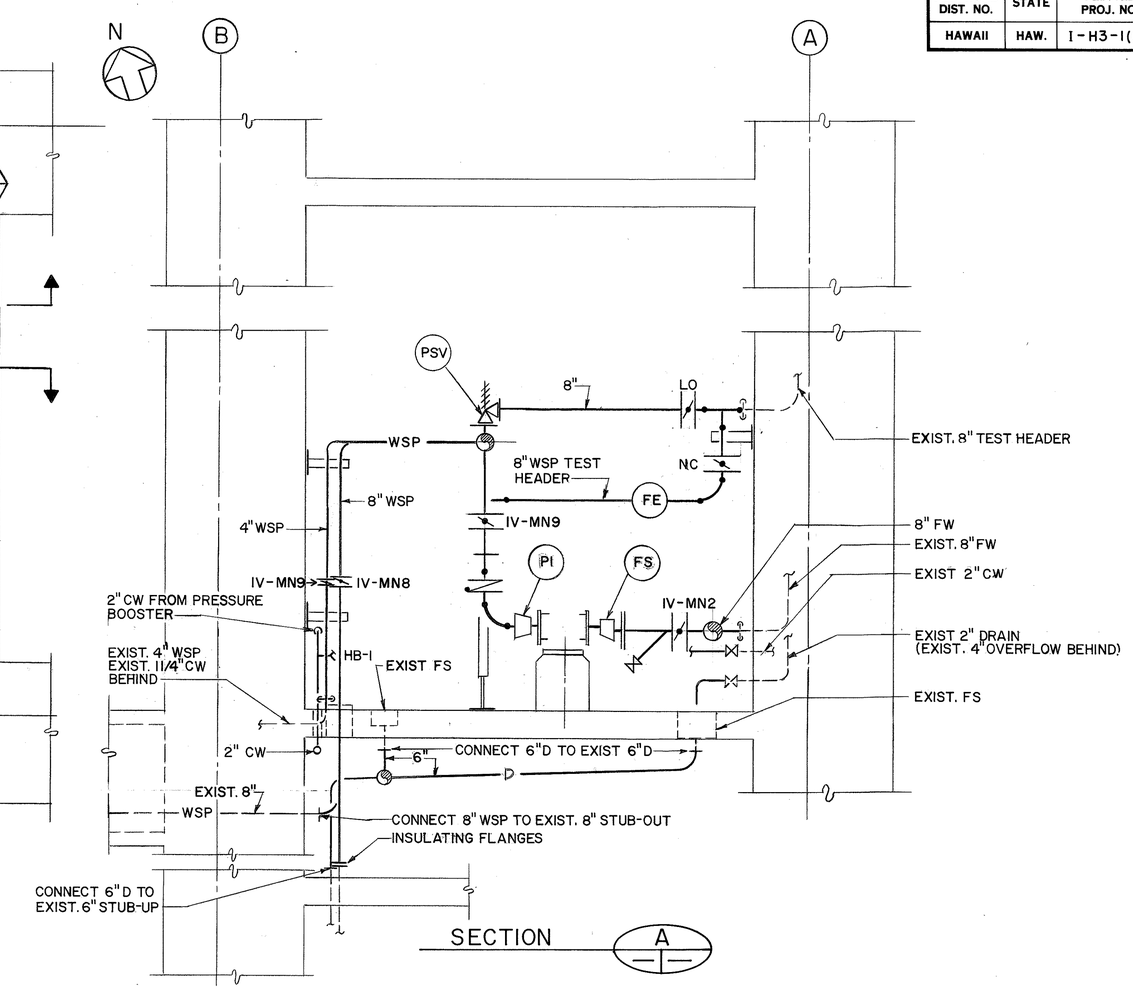

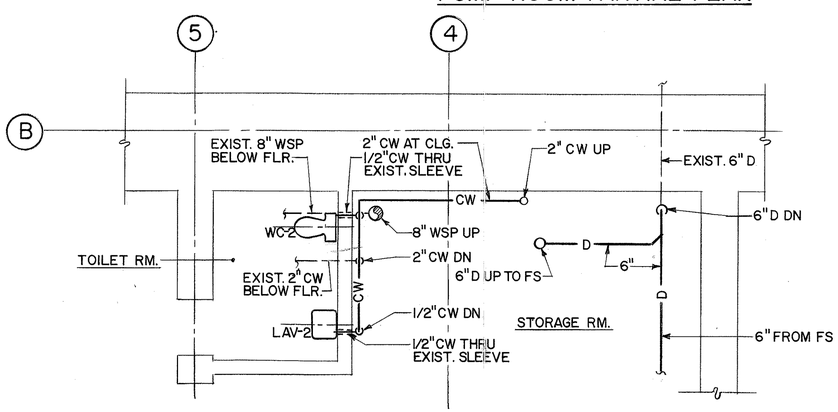

PARTIAL PLAN AT LOADING DOCK LEVEL

SURVEY PLOTTED BY	DATE
DRAWN BY P. L. LALOUE	01/22/90
TRACED BY	
DESIGNED BY P. L. LALOUE	01/15/90
QUANTITIES BY	
CHECKED BY J. N. QUE	06/04/90
ORIGINAL PLAN	NOTE BOOK	No.

GRAPHIC SCALE
1' 0 1' 2' 3' 4' 5'
3/8"=1'-0"

JOHN N. QUE
REGISTERED PROFESSIONAL ENGINEER
No. 8503-M
HAWAII, U.S.A.

THIS WORK WAS PREPARED BY ME OR UNDER MY SUPERVISION

DATE	REVISION

STATE OF HAWAII
DEPARTMENT OF TRANSPORTATION
HIGHWAYS DIVISION

PLUMBING - PUMP ROOM
PARTIAL PLANS & SECTION
HALAWA PORTAL BUILDING - IB
INTERSTATE ROUTE H-3
F.A.I. PROJ. NO. I-H3-1(66)

SCALE: 3/8" = 1'-0" DATE: APR. 1992

SHEET NO. MN5 OF 8 SHEETS

FED. ROAD DIST. NO.	STATE	FED. AID PROJ. NO.	FISCAL YEAR	SHEET NO.	TOTAL SHEETS
HAWAII	HAW.	I-H3-1(66)	1992	46	440

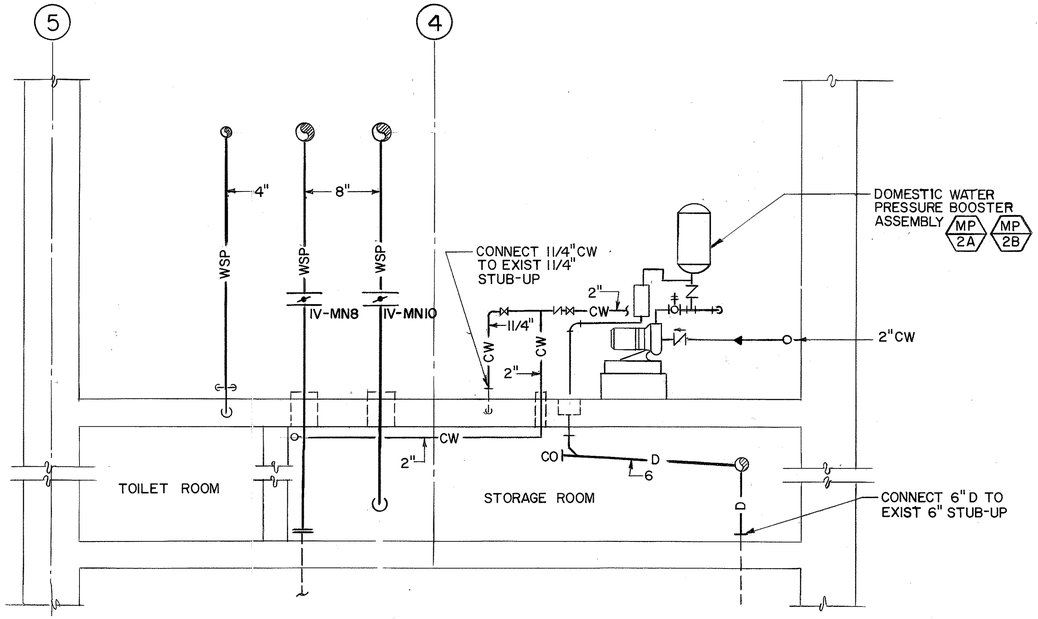

SECTION A (MN5 | MN6)

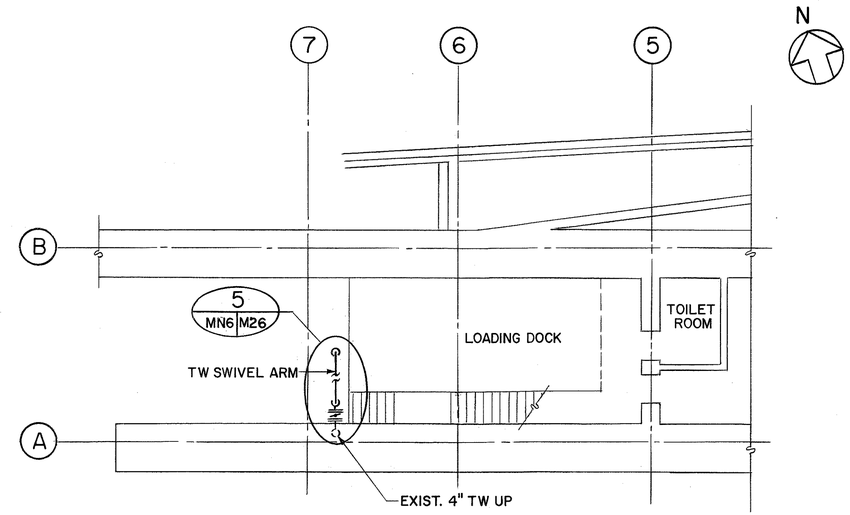

LEVEL 1 PARTIAL PLAN
SCALE: 1/8"=1'-0"

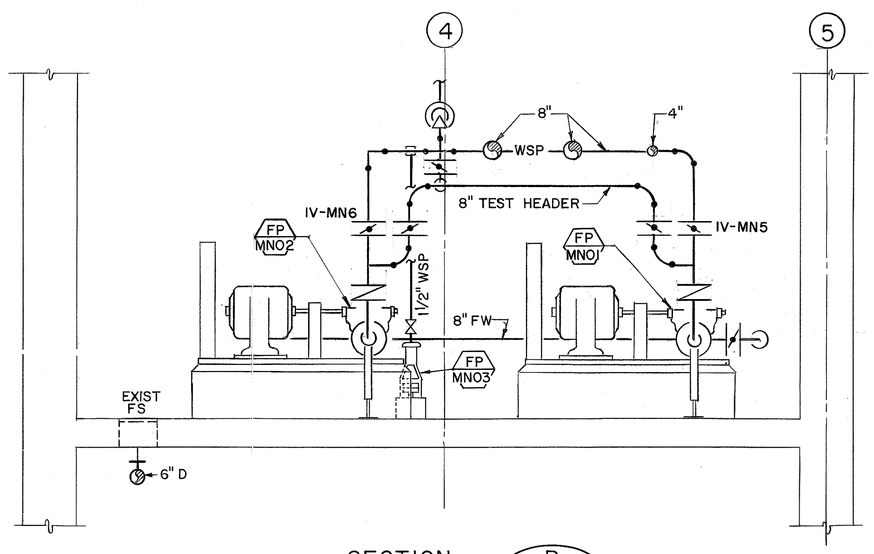

SECTION B (MN5 | MN6)

GRAPHIC SCALES
8' 0' 8' 16'
1/8"=1'-0"
1' 0 1' 2' 3' 4' 5'
3/8"=1'-0"

JOHN N. QUE
REGISTERED PROFESSIONAL ENGINEER
No. 6503-M
HAWAII, U.S.A.

THIS WORK WAS PREPARED BY ME OR UNDER MY SUPERVISION

DATE	REVISION

STATE OF HAWAII
DEPARTMENT OF TRANSPORTATION
HIGHWAYS DIVISION

PARTIAL PLAN & PUMP ROOM SECTIONS
HALAWA PORTAL BUILDING-IB

INTERSTATE ROUTE H-3
F.A.I. PROJ. NO. I-H3-1(66)

SCALE: AS NOTED DATE: APR 1992

SHEET NO. MN6 OF 8 SHEETS

ORIGINAL PLAN	SURVEY PLOTTED BY P.L. LALOUE	DATE 01/04/90
	DRAWN BY "	" 01/04/90
	TRACED BY P.L. LALOUE	" 12/17/89
NOTE BOOK	DESIGNED BY "	" 05/04/90
	QUANTITIES BY "	"
No.	CHECKED BY J.N. QUE	"

FED. ROAD DIST. NO.	STATE	FED. AID PROJ. NO.	FISCAL YEAR	SHEET NO.	TOTAL SHEETS
HAWAII	HAW.	I-H3-1(66)	1992	47	440

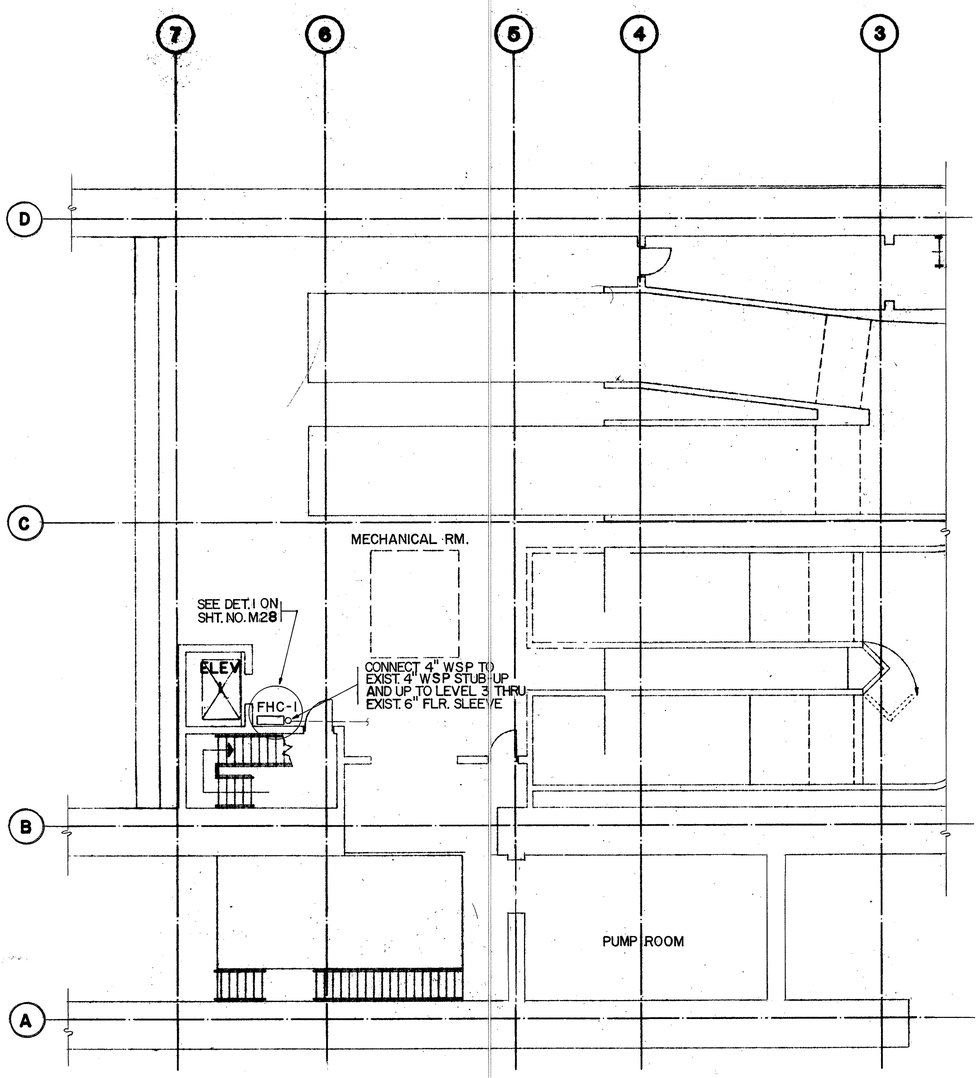

LEVEL 2 PLAN

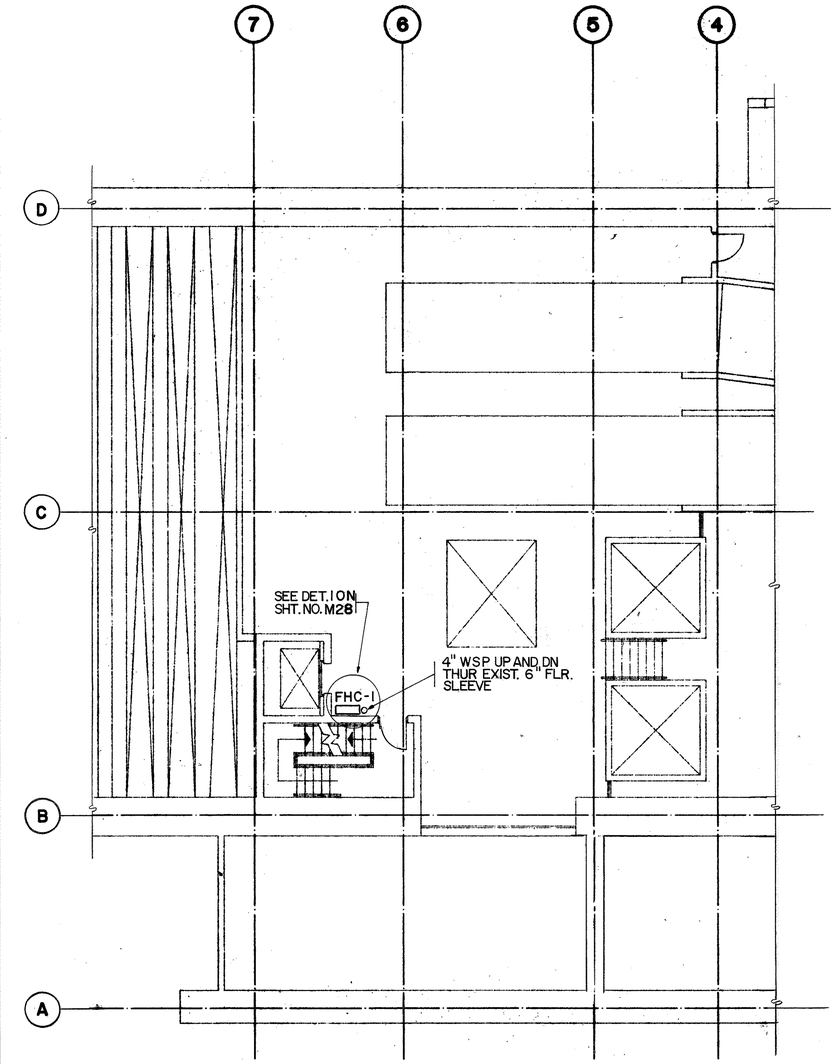

LEVEL 3 PLAN

N

FOR DETAIL AS-BUILT INFORMATION
REFER TO CONSTRUCTION SUBMITTALS

GRAPHIC SCALE
8' 0' 8' 16'
1/8"=1'-0"

JOHN M. QUE
REGISTERED PROFESSIONAL ENGINEER
No. 6503-M
HAWAII, U.S.A.

THIS WORK WAS PREPARED BY ME OR UNDER MY SUPERVISION

DATE	REVISION

STATE OF HAWAII
DEPARTMENT OF TRANSPORTATION
HIGHWAYS DIVISION

FIRE PROTECTION - LEVEL 2 & LEVEL 3 PARTIAL PLANS

HALAWA PORTAL BUILDING - IB
INTERSTATE ROUTE H-3
F.A.I. PROJ. NO. I-H3-1(66)

SCALE: 1/8"=1'-0" DATE: APR 1992

SHEET NO. MN7 OF 8 SHEETS

		DATE
ORIGINAL PLAN	SURVEY PLOTTED BY	11/10/89
	DRAWN BY B.F. BUNY, JR.	
	TRACED BY	11/8/89
NOTE BOOK	DESIGNED BY P.L. LALOUE	
	QUANTITIES BY	06/05/90
No.	CHECKED BY J.N. QUE	

FED. ROAD DIST. NO.	STATE	FED. AID PROJ. NO.	FISCAL YEAR	SHEET NO.	TOTAL SHEETS
HAWAII	HAW.	I-H3-1(66)	1992	48	440

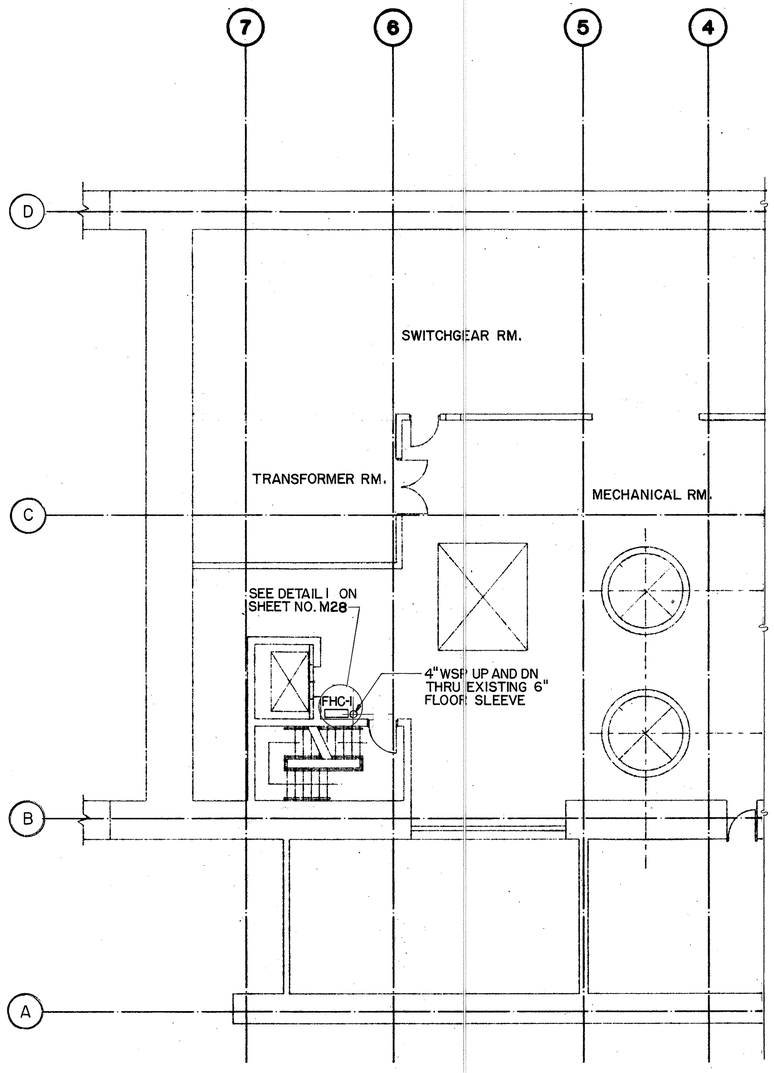

LEVEL 4 PLAN

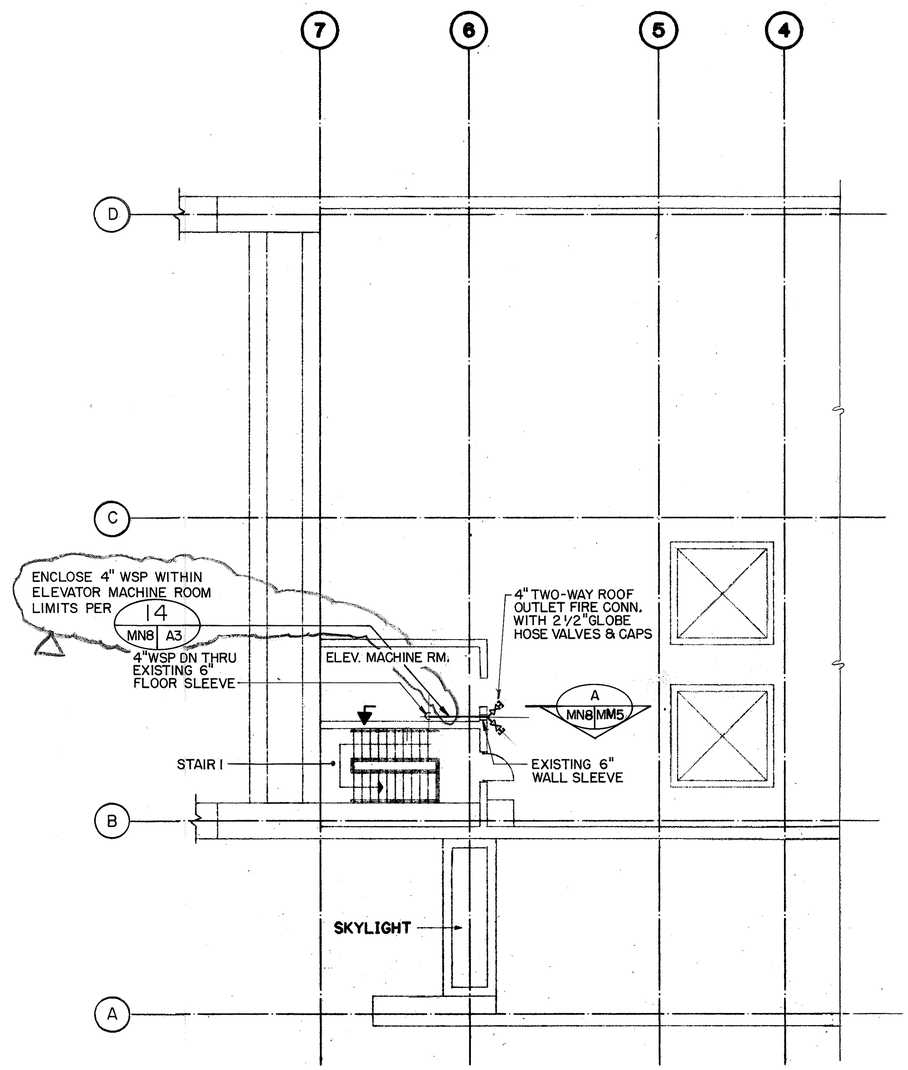

ROOF LEVEL PLAN

N

GRAPHIC SCALE

8' 0' 8' 16'

1/8" = 1'-0"

9/19/94	REV. PER DCN 66-052
DATE	REVISION

STATE OF HAWAII
DEPARTMENT OF TRANSPORTATION
HIGHWAYS DIVISION

FIRE PROTECTION-LEVEL 4 & ROOF PARTIAL PLANS & SECTION

HALAWA PORTAL BUILDING - JB

INTERSTATE ROUTE H-3
F.A.I. PROJ. NO. I-H3-1(66)

SCALE: 1/8" = 1'-0" DATE: APR 1992

SHEET NO. MN8 OF 8 SHEETS

JOHN M. QUE
REGISTERED PROFESSIONAL ENGINEER
No. 6503-M
HAWAII, U.S.A.

THIS WORK WAS PREPARED BY ME OR UNDER MY SUPERVISION

		DATE
SURVEY PLOTTED BY		
DRAWN BY	B. F. BUNYI, JR.	11/8/89
TRACED BY		
DESIGNED BY	P.L. LALOUE	11/7/89
QUANTITIES BY		
CHECKED BY	J. N. QUE	06/05/90

ORIGINAL PLAN

NOTE BOOK

No.

FED. ROAD DIST. NO.	STATE	FED. AID PROJ. NO.	FISCAL YEAR	SHEET NO.	TOTAL SHEETS
HAWAII	HAW.	I-H3-1(66)	1992	49	440

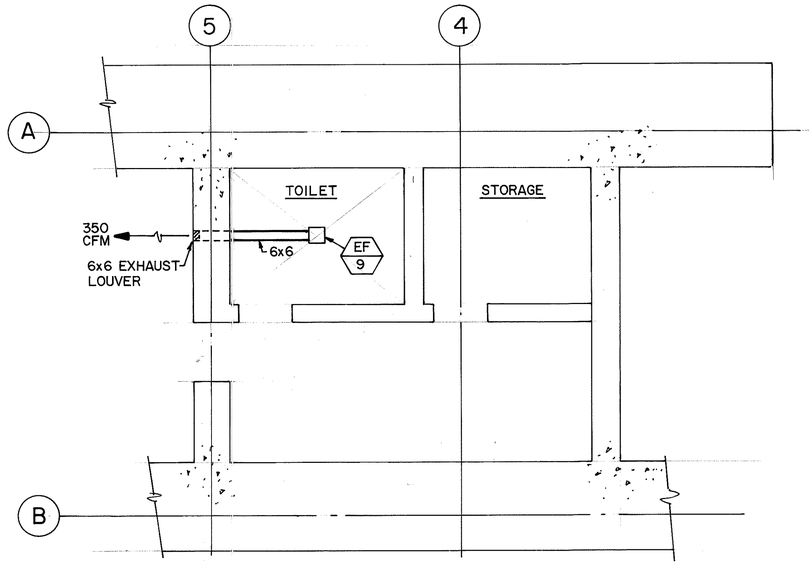

LEVEL 2 PARTIAL PLAN

FOR DETAIL AS-BUILT INFORMATION
REFER TO CONSTRUCTION SUBMITTALS

DATE	REVISION

GRAPHIC SCALE
1' 0 1' 2' 3' 4' 5'
1/4" = 1'-0"

JOHN K. GOE
REGISTERED PROFESSIONAL ENGINEER
No. 8503-M
HAWAII, U.S.A.

THIS WORK WAS PREPARED BY ME OR UNDER MY SUPERVISION

STATE OF HAWAII
DEPARTMENT OF TRANSPORTATION
HIGHWAYS DIVISION

HVAC-LEVEL 2
PARTIAL PLAN

HALAWA PORTAL BUILDING-OB

INTERSTATE ROUTE H-3
F.A.I. PROJ. NO. I-H3-1(66)

SCALE: 1/4"=1'-0" DATE: APR 1992

SHEET NO. M01 OF 6 SHEETS

ORIGINAL PLAN		
	SURVEY PLOTTED BY	DATE
	DRAWN BY D. E. DRYDEN	1/17/90
	TRACED BY " "	
NOTE BOOK	DESIGNED BY D. E. DRYDEN	1/09/90
	QUANTITIES BY " "	
No.	CHECKED BY J. N. QUE	5/05/90

FED. ROAD DIST. NO.	STATE	FED. AID PROJ. NO.	FISCAL YEAR	SHEET NO.	TOTAL SHEETS
HAWAII	HAW.	I-H3-1(66)	1992	50	440

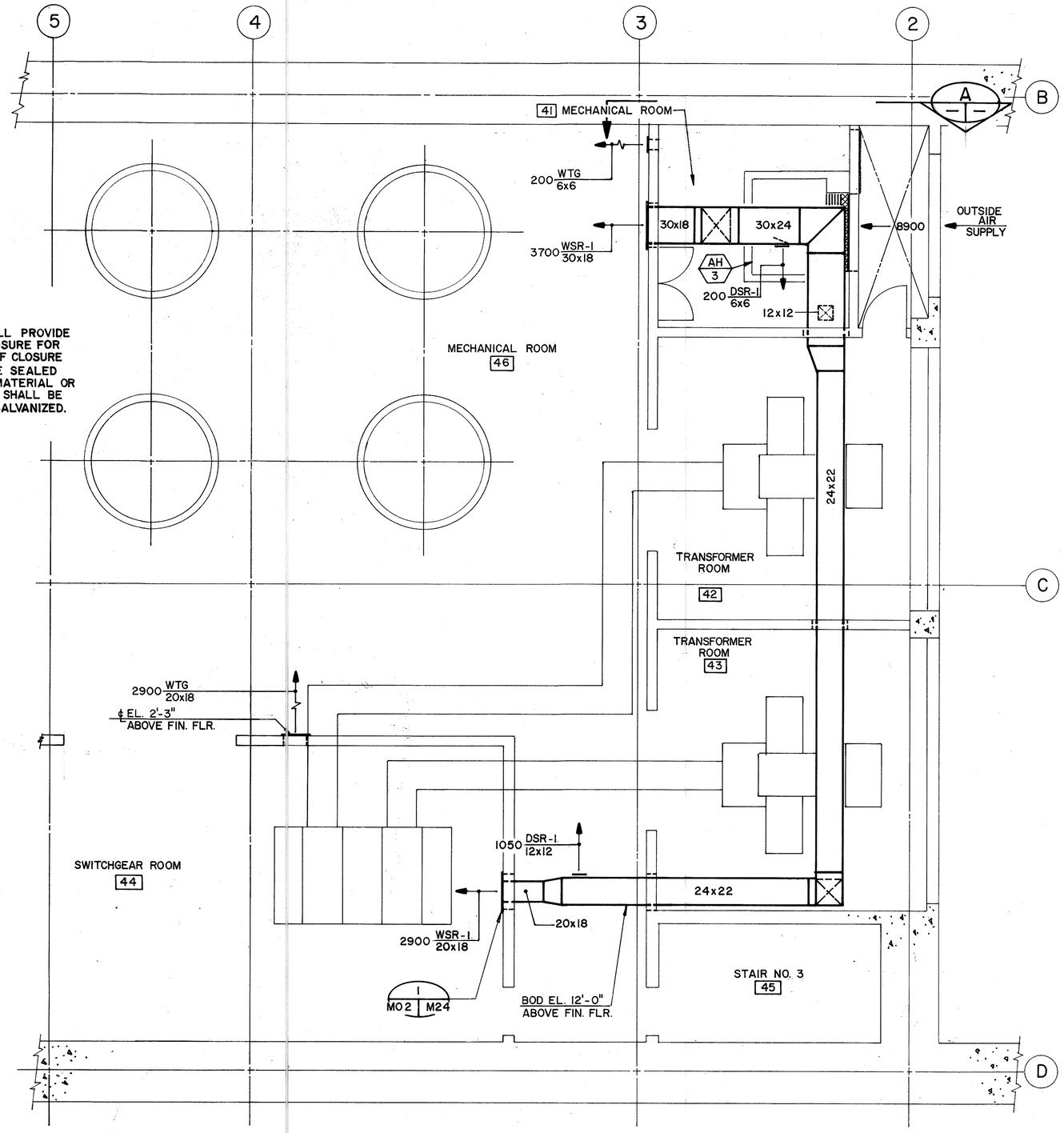

NOTE:

CONTRACTOR SHALL PROVIDE AND INSTALL CLOSURE FOR OPENING. EDGES OF CLOSURE PLATE SHALL BE SEALED WITH A GASKET MATERIAL OR CAULK. MATERIAL SHALL BE CARBON STEEL, GALVANIZED.

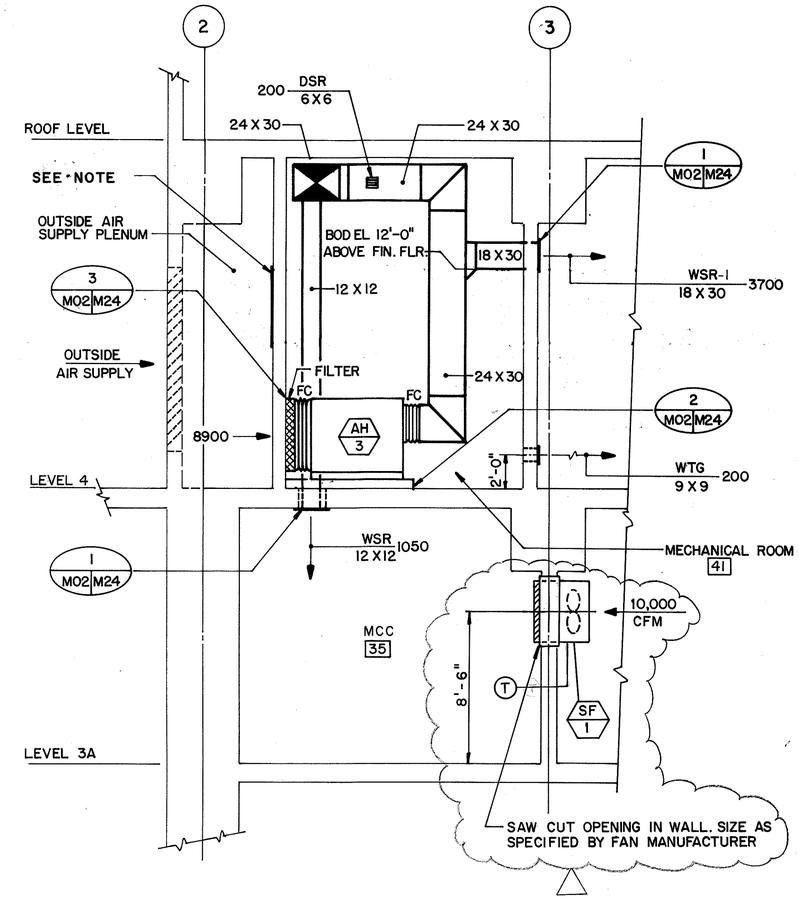

SECTION A

DATE	REVISION
3/8/94	REV. SECT. 'A', ADDED SF PER DCN 66-039
5/13/93	DELETED AUX. COOLING FANS & ASSOC. DUCTWORK PER DCN -66-004

GRAPHIC SCALE
1' 0 1' 2' 3' 4' 5' 10'
1/4" = 1'-0"

JOHN N. QUE REGISTERED PROFESSIONAL ENGINEER No. 6503-M HAWAII, U.S.A.

THIS WORK WAS PREPARED BY ME OR UNDER MY SUPERVISION

STATE OF HAWAII
DEPARTMENT OF TRANSPORTATION
HIGHWAYS DIVISION

HVAC — LEVEL 4

PARTIAL PLAN AND SECTION

HALAWA PORTAL BUILDING — OB
INTERSTATE ROUTE H-3
F.A.I. PROJ. NO. I-H3-1(66)

SCALE: 1/4" = 1'-0" DATE: APR 1992

SHEET NO. M02 OF 6 SHEETS

		DATE
ORIGINAL PLAN	SURVEY PLOTTED BY	12/13/89
	DRAWN BY B. F. BUNYI	
	TRACED BY	
NOTE BOOK	DESIGNED BY D. E. DRYDEN	12/06/89
	QUANTITIES BY	
No.	CHECKED BY J. N. QUE	06/05/90

FED. ROAD DIST. NO.	STATE	FED. AID PROJ. NO.	FISCAL YEAR	SHEET NO.	TOTAL SHEETS
HAWAII	HAW.	I-H3-1(66)	1992	51	440

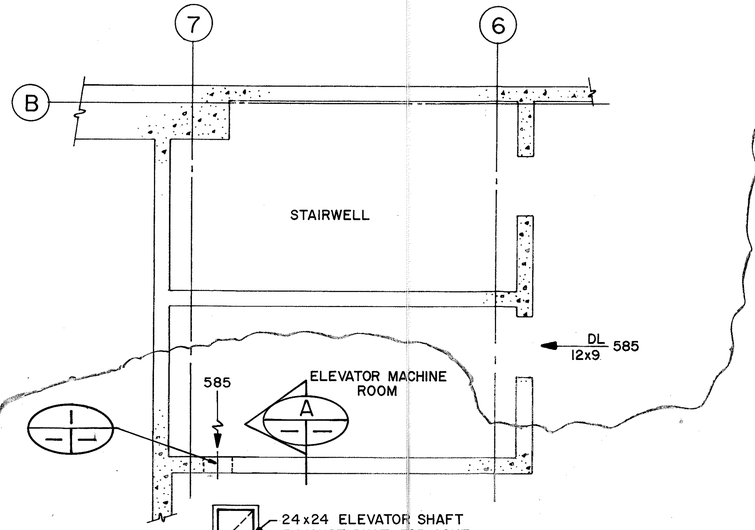

ROOF LEVEL PARTIAL PLAN
SCALE: 1/4" = 1'-0"

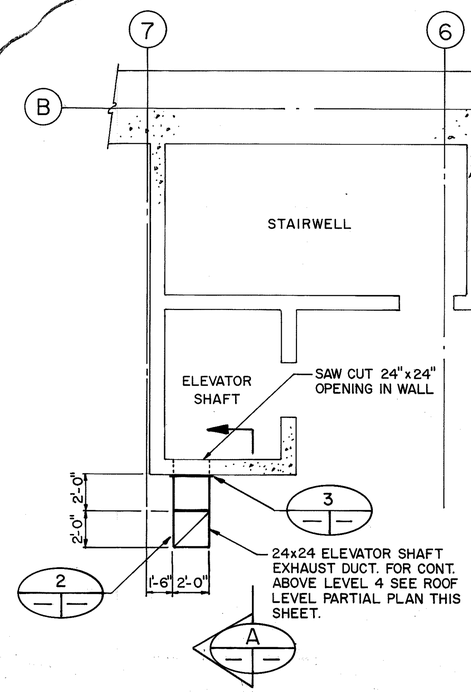

LEVEL 4 PARTIAL PLAN
SCALE: 1/4"=1'-0"

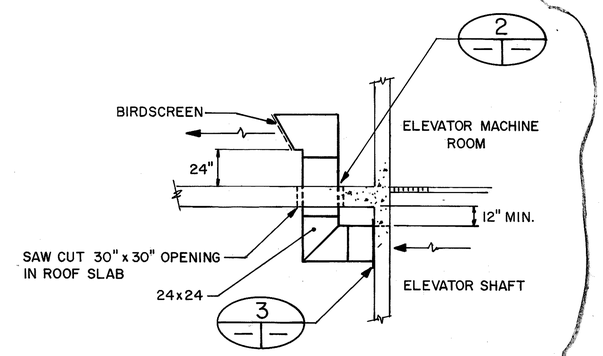

NOTE:
FOR SAW CUT OPENINGS - BUSH HAMMER EXPOSED EDGES TO EVEN SURFACE, GRIND SMOOTH. PAINT EDGES OF OPENINGS AND EXPOSED REBAR WITH EPOXY PAINT.

SECTION A
SCALE: 1/4"=1'-0"
MQ3
MM3

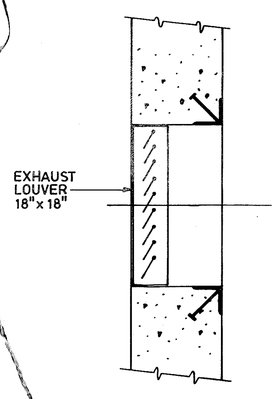

DETAIL 1
NO SCALE

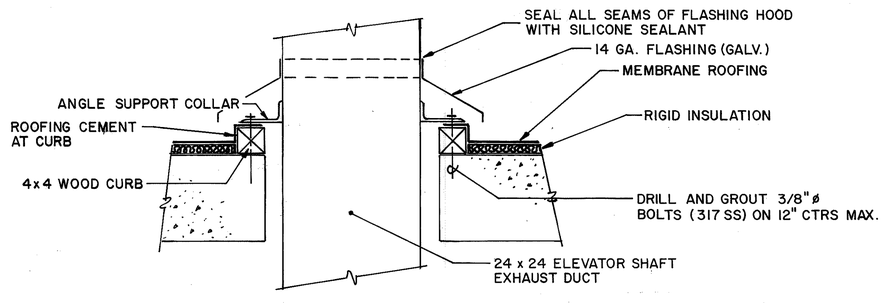

DETAIL 2
NO SCALE
MN3
MM3
MQ3

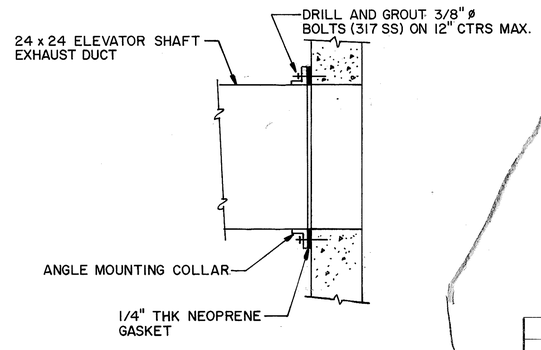

DETAIL 3
NO SCALE
MN3
MM3
MQ3

8/15/94	REV. PER DCN 66-052
DATE	REVISION

STATE OF HAWAII
DEPARTMENT OF TRANSPORTATION
HIGHWAYS DIVISION

HVAC-ELEVATOR EQUIPMENT ROOM PLAN AND DETAILS

HALAWA PORTAL BUILDING-OB
INTERSTATE ROUTE H-3
F.A.I. PROJ. NO. I-H3-1(66)

JOHN M. QUE
REGISTERED PROFESSIONAL ENGINEER
No. 6503-M
HAWAII, U.S.A.

THIS WORK WAS PREPARED BY ME OR UNDER MY SUPERVISION

SCALE: AS NOTED DATE: APR 1992

SHEET NO. M03 OF 6 SHEETS

ORIGINAL PLANS	SUBMITTED BY	D. E. DRYDEN	DATE 12/14/89
	DRAWN BY		
	TRACED BY		
NOTE BOOK	DESIGNED BY	D. E. DRYDEN	12/06/89
	QUANTITIES BY		
No.	CHECKED BY	J. N. QUE	06/05/90

FED. ROAD DIST. NO.	STATE	FED. AID PROJ. NO.	FISCAL YEAR	SHEET NO.	TOTAL SHEETS
HAWAII	HAW.	I-H3-1(66)	1992	52	440

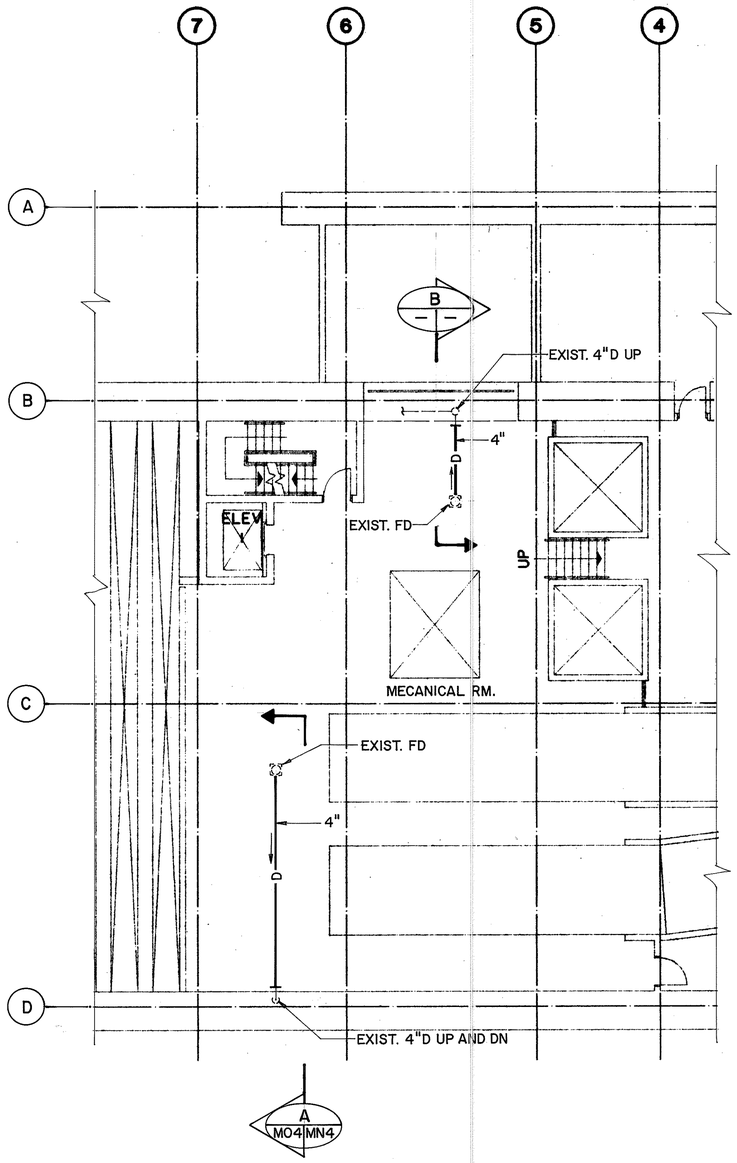

LEVEL 3 PARTIAL PLAN

SCALE: 1/8"=1'-0"

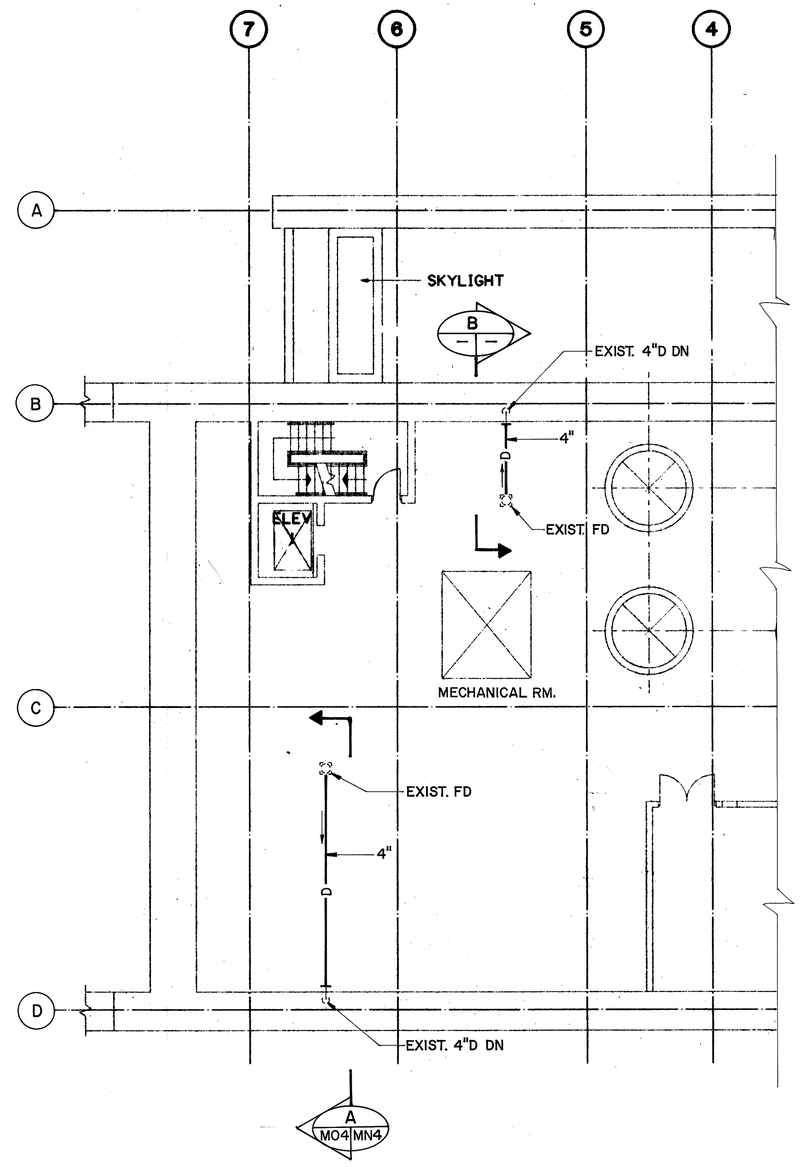

LEVEL 4 PARTIAL PLAN

SCALE: 1/8"=1'-0"

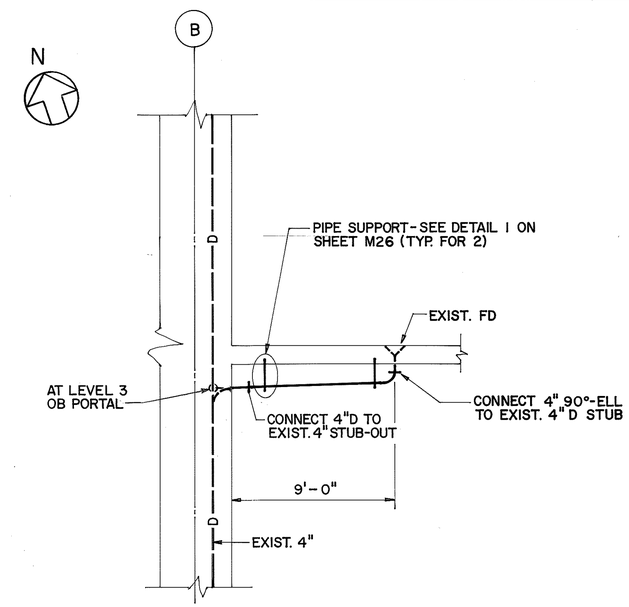

SECTION B

SCALE: 1/4"=1'-0"

M04 MN4 | M04

GRAPHIC SCALES

4' 0' 4' 8'

1/4"=1'-0"

8' 0' 8' 16'

1/8"=1'-0"

FOR DETAIL AS-BUILT INFORMATION REFER TO CONSTRUCTION SUBMITTALS

DATE	REVISION

JOHN M. GUE
REGISTERED PROFESSIONAL ENGINEER
No. 6508-M
HAWAII, U.S.A.

THIS WORK WAS PREPARED BY ME OR UNDER MY SUPERVISION

STATE OF HAWAII
DEPARTMENT OF TRANSPORTATION
HIGHWAYS DIVISION

PLUMBING - LEVEL 3 & LEVEL 4 PARTIAL PLANS

HALAWA PORTAL BUILDING - OB

INTERSTATE ROUTE H-3

F.A.I. PROJ. NO. I-H3-1(66)

SCALE: AS NOTED DATE: APR 1992

SHEET NO. M04 OF 6 SHEETS

		DATE
SURVEY PLOTTED BY		
DRAWN BY	B.E. BUNYI, JR.	12/5/89
TRACED BY		
TRACED BY	P.L. LALOUE	12/5/89
DESIGNED BY		
QUANTITIES BY		
CHECKED BY	J.N. QUE	06/05/90

ORIGINAL PLAN

NOTEBOOK

NO.

FED. ROAD DIST. NO.	STATE	FED. AID PROJ. NO.	FISCAL YEAR	SHEET NO.	TOTAL SHEETS
HAWAII	HAW.	I-H3-1(66)	1992	53	440

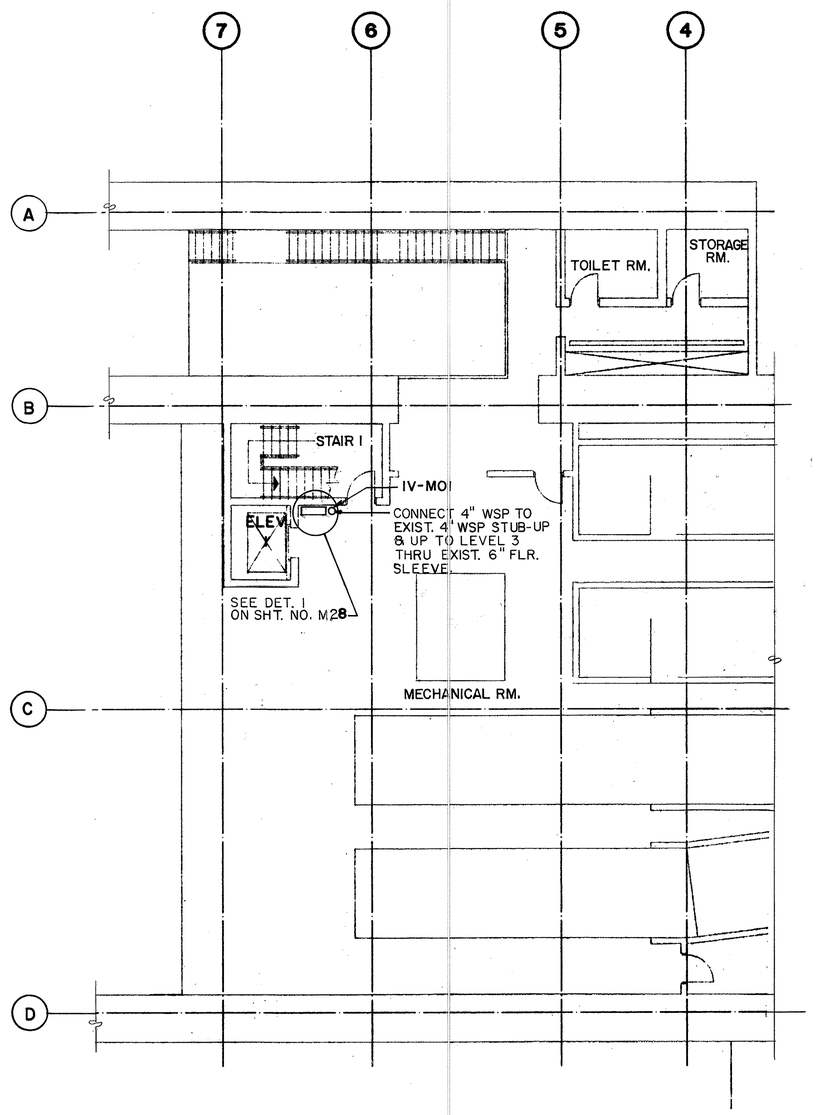

LEVEL 2

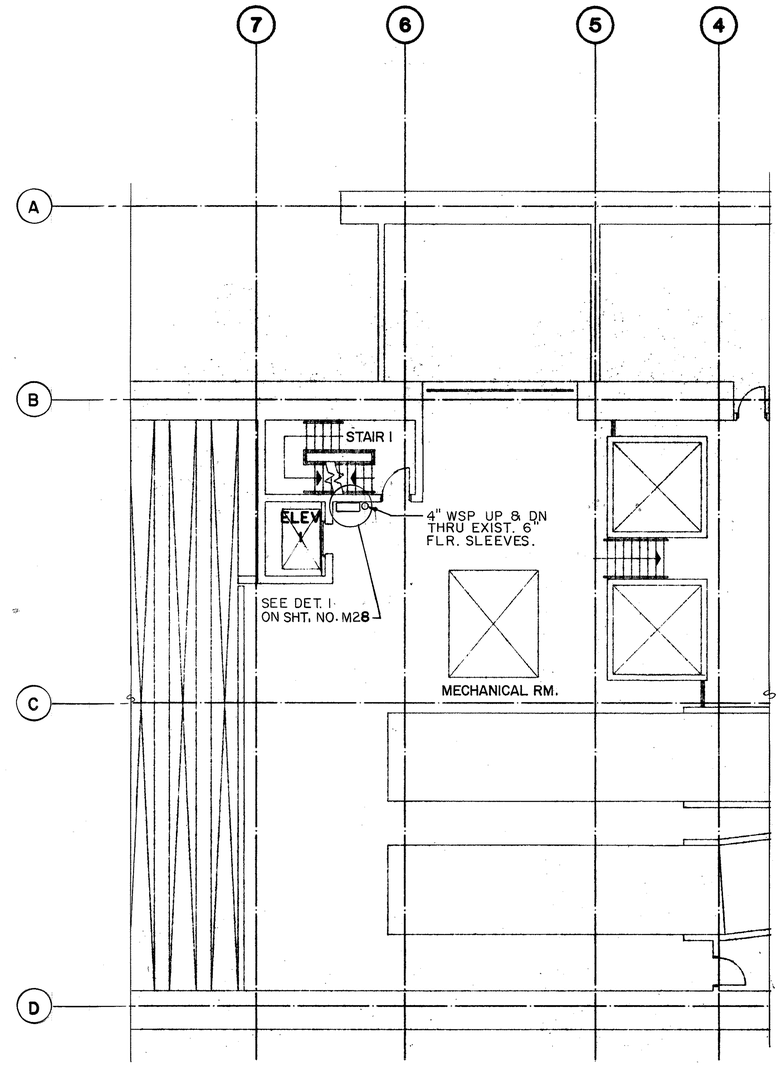

LEVEL 3

N

FOR DETAIL AS-BUILT INFORMATION REFER TO CONSTRUCTION SUBMITTALS

GRAPHIC SCALE
8' 0' 8' 16'
1/8" = 1'-0"

JOHN N. QUE
REGISTERED PROFESSIONAL ENGINEER
No. 8503-M
HAWAII, U.S.A.

THIS WORK WAS PREPARED BY ME OR UNDER MY SUPERVISION

DATE	REVISION

STATE OF HAWAII
DEPARTMENT OF TRANSPORTATION
HIGHWAYS DIVISION

FIRE PROTECTION-LEVEL 2 & LEVEL 3 PARTIAL PLANS
HALAWA PORTAL BUILDING - OB
INTERSTATE ROUTE H-3
F.A.I. PROJ. NO. I-H3-1(66)

SCALE: 1/8" = 1'-0" DATE: APR 1992

SHEET NO. M05 OF 6 SHEETS

ORIGINAL PLAN		DATE
	SURVEY PLOTTED BY	
	DRAWN BY P.L. LALOQUE	12/5/89
NOTE BOOK	TRACED BY	
	DESIGNED BY P.L. LALOQUE	11/30/89
	QUANTITIES BY	
No.	CHECKED BY J. N. QUE	06/04/90

FED. ROAD DIST. NO.	STATE	FED. AID PROJ. NO.	FISCAL YEAR	SHEET NO.	TOTAL SHEETS
HAWAII	HAW.	I-H3-1(66)	1992	54	440

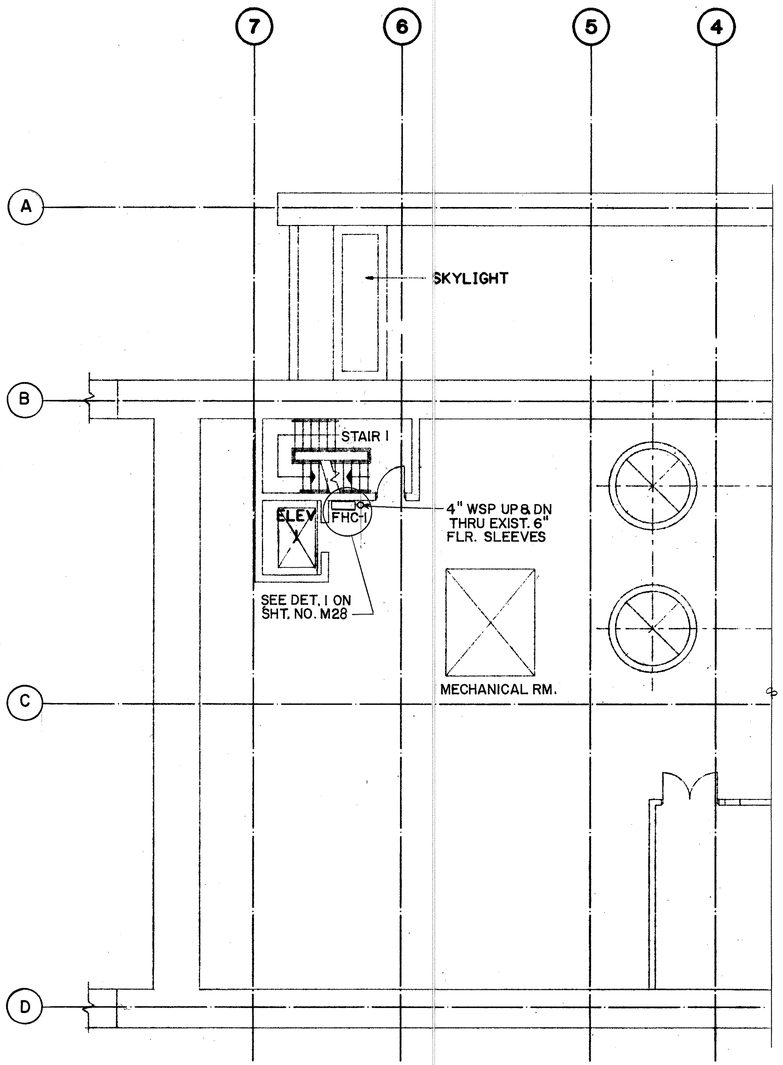

LEVEL 4 PARTIAL PLAN

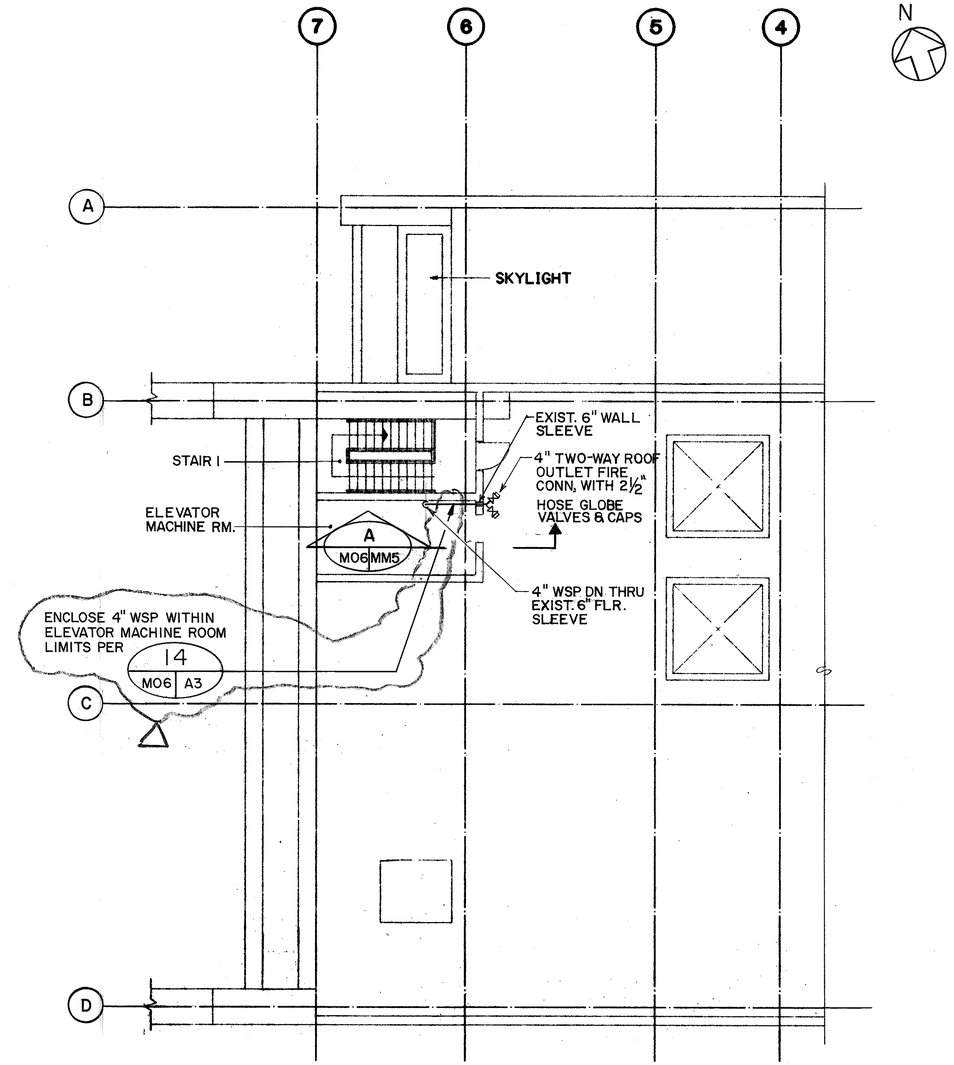

ROOF LEVEL PARTIAL PLAN

GRAPHIC SCALE
8' 0' 8' 16'
1/8" = 1'-0"

JOHN N. GUE
REGISTERED PROFESSIONAL ENGINEER
No. 6503-M
HAWAII, U.S.A.

THIS WORK WAS PREPARED BY ME OR UNDER MY SUPERVISION

John N. Gue

DATE	REVISION
9/19/94	REV. PER DCN 66-052

STATE OF HAWAII
DEPARTMENT OF TRANSPORTATION
HIGHWAYS DIVISION

FIRE PROTECTION-LEVEL 4 & ROOF PARTIAL PLANS

HALAWA PORTAL BUILDING - OB

INTERSTATE ROUTE H-3
F.A.I. PROJ. NO. I-H3-1(66)

SCALE: 1/8"=1'-0" DATE: APR 1992

SHEET NO. M06 OF 6 SHEETS

		DATE
SURVEY PLOTTED BY		
DRAWN BY	P.L. LALOUE	12/6/89
TRACED BY		
NOTE BOOK	P.L. LALOUE	12/6/89
DESIGNED BY		
QUANTITIES BY		
CHECKED BY	J. N. GUE	06/04/90

ORIGINAL PLAN
No.

FED. ROAD DIST. NO.	STATE	FED. AID PROJ. NO.	FISCAL YEAR	SHEET NO.	TOTAL SHEETS
HAWAII	HAW.	I-H3-1(66)	1992	55	440

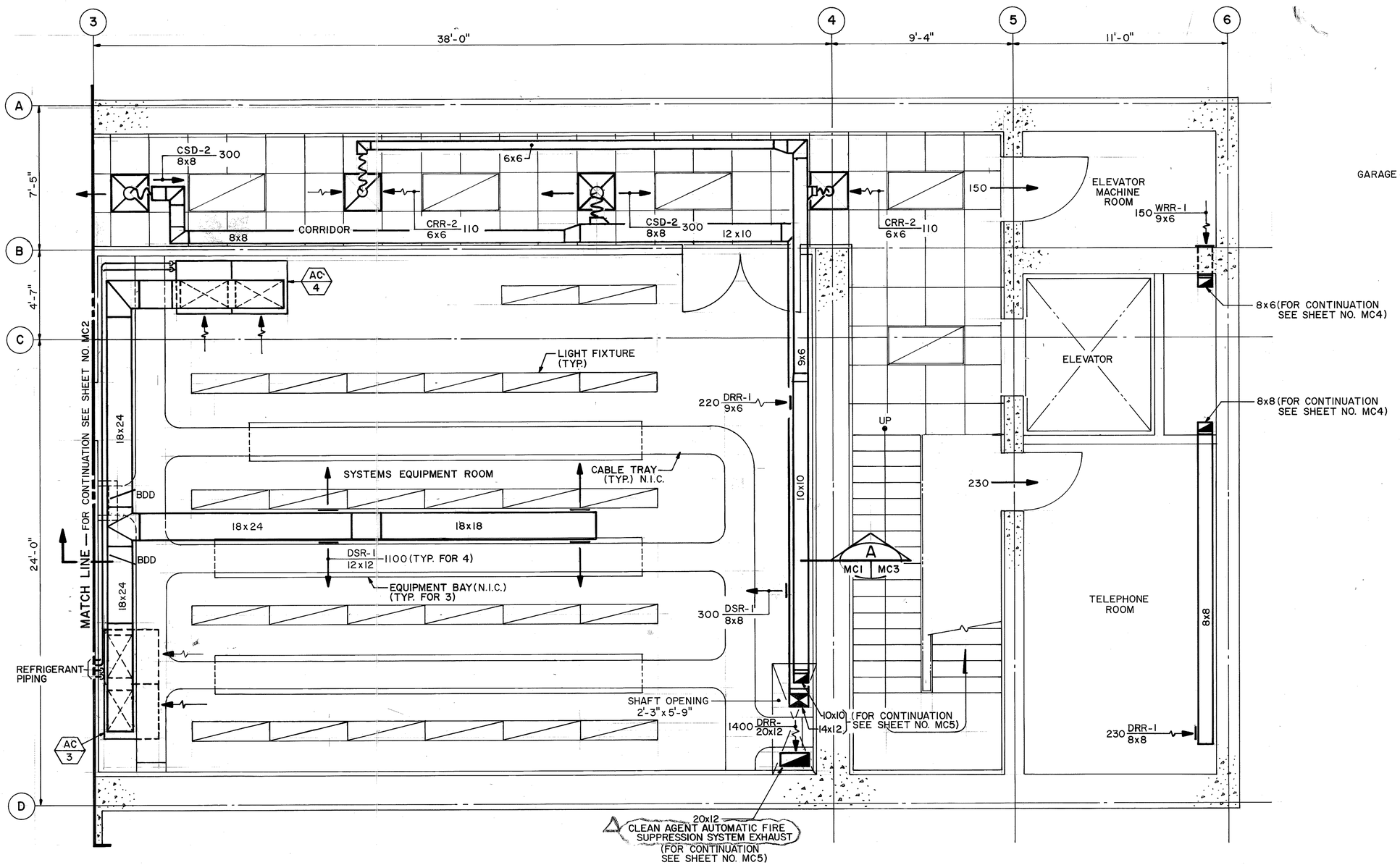

LEVEL 1 PARTIAL PLAN

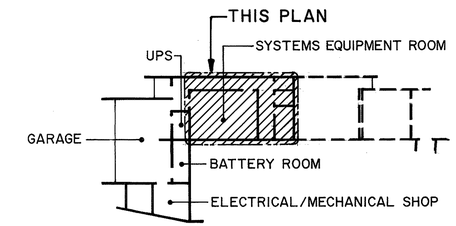

KEY PLAN

NOTES:

1. FOR LEGEND AND GENERAL NOTES REFER TO SHEET NO. M1.
2. FOR AIR CONDITIONING UNIT SCHEDULE REFER TO SHEET NO. M4.
3. FOR AIR DISTRIBUTION DEVICE SCHEDULE REFER TO SHEET NO. M6.

FOR DETAIL AS-BUILT INFORMATION REFER TO CONSTRUCTION SUBMITTALS

DATE	REVISION
1/25/94	REV. PER DCN 66-034

STATE OF HAWAII
DEPARTMENT OF TRANSPORTATION
HIGHWAYS DIVISION

HVAC

LEVEL 1 PARTIAL PLAN - 1

CONTROL BUILDING
INTERSTATE ROUTE H-3
F.A.I. PROJ. NO. I-H3-1(66)

SCALE: 3/8"=1'-0" DATE: APR 1992

SHEET NO. MC1 OF 19 SHEETS

JOHN N. QUE
REGISTERED PROFESSIONAL ENGINEER
No. 6503-M
HAWAII, U.S.A.

THIS WORK WAS PREPARED BY ME OR UNDER MY SUPERVISION

GRAPHIC SCALE
1' 6" 0 1' 2' 3' 4' 5'
3/8"=1'-0"

		DATE
ORIGINAL PLAN	SURVEY PLOTTED BY	
	DRAWN BY	D.E. DRYDEN 01/14/90
NOTE BOOK	TRACED BY	D.E. DRYDEN 01/13/90
	DESIGNED BY	
	QUANTITIES BY	
No.	CHECKED BY	J.N. QUE 05/07/90

FED. ROAD DIST. NO.	STATE	FED. AID PROJ. NO.	FISCAL YEAR	SHEET NO.	TOTAL SHEETS
HAWAII	HAW.	I-H3-1(66)	1992	56	440

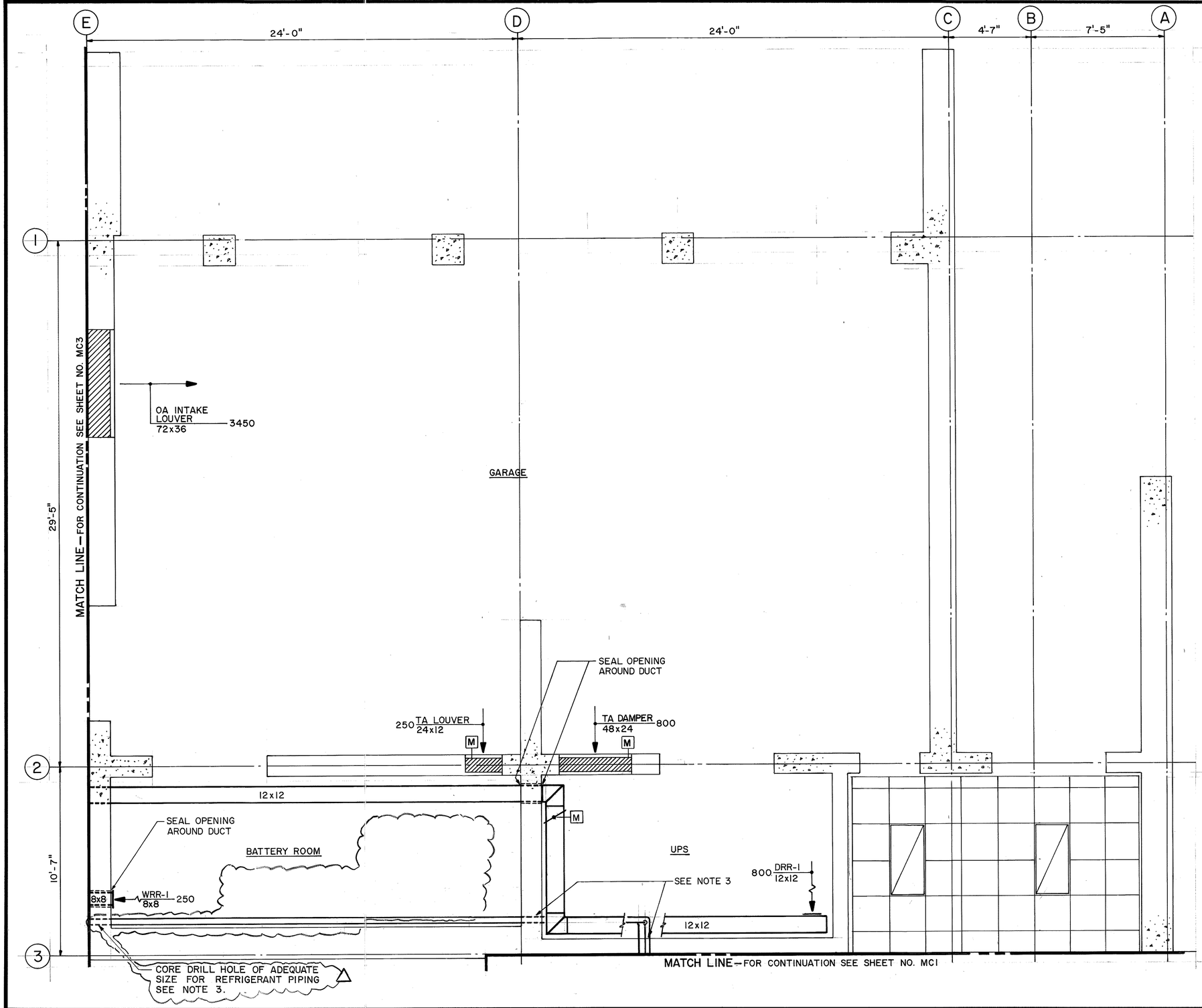

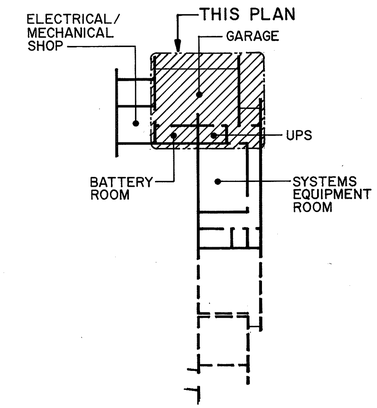

KEY PLAN

NOTES:

1. FOR LEGEND AND GENERAL NOTES REFER TO SHEET NO. M1.
2. FOR AIR DISTRIBUTION DEVICE SCHEDULE REFER TO SHEET NO. M6.
3. AFTER INSTALLATION OF REFRIGERANT PIPING SEAL OPENING BETWEEN PIPING AND SLEEVE

SURVEY PLOTTED BY	DATE 01/11/90
DRAWN BY D. E. DRYDEN	"
TRACED BY	"
DESIGNED BY D. E. DRYDEN	01/09/90
QUANTITIES BY	"
CHECKED BY J. N. QUE	05/01/90
ORIGINAL PLAN	
NOTE BOOK	
No.	

DATE	REVISION
11/23/94	REV. PER DCN 66-054

JOHN N. QUE
REGISTERED PROFESSIONAL ENGINEER
No. 6503-M
HAWAII, U.S.A.

THIS WORK WAS PREPARED BY ME OR UNDER MY SUPERVISION

STATE OF HAWAII
DEPARTMENT OF TRANSPORTATION
HIGHWAYS DIVISION

HVAC
LEVEL I PARTIAL PLAN-2

CONTROL BUILDING

INTERSTATE ROUTE H-3
F.A.I. PROJ. NO. I-H3-1(66)

SCALE: 3/8"=1'-0" DATE: APR 1992

SHEET NO. MC2 OF 19 SHEETS

FED. ROAD DIST. NO.	STATE	FED. AID PROJ. NO.	FISCAL YEAR	SHEET NO.	TOTAL SHEETS
HAWAII	HAW.	I-H3-1(66)	1992	56	440

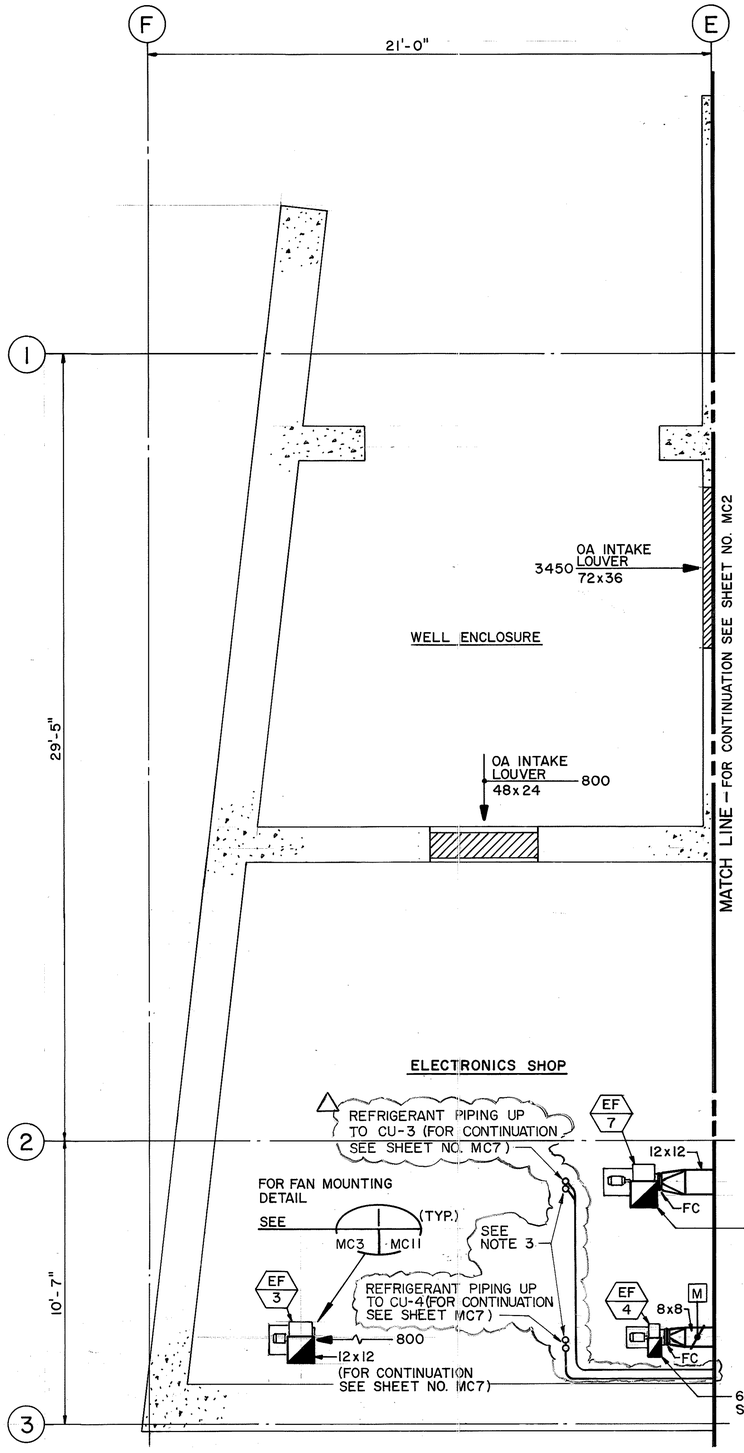

LEVEL I PARTIAL PLAN – 3
SCALE: 3/8"=1'-0"

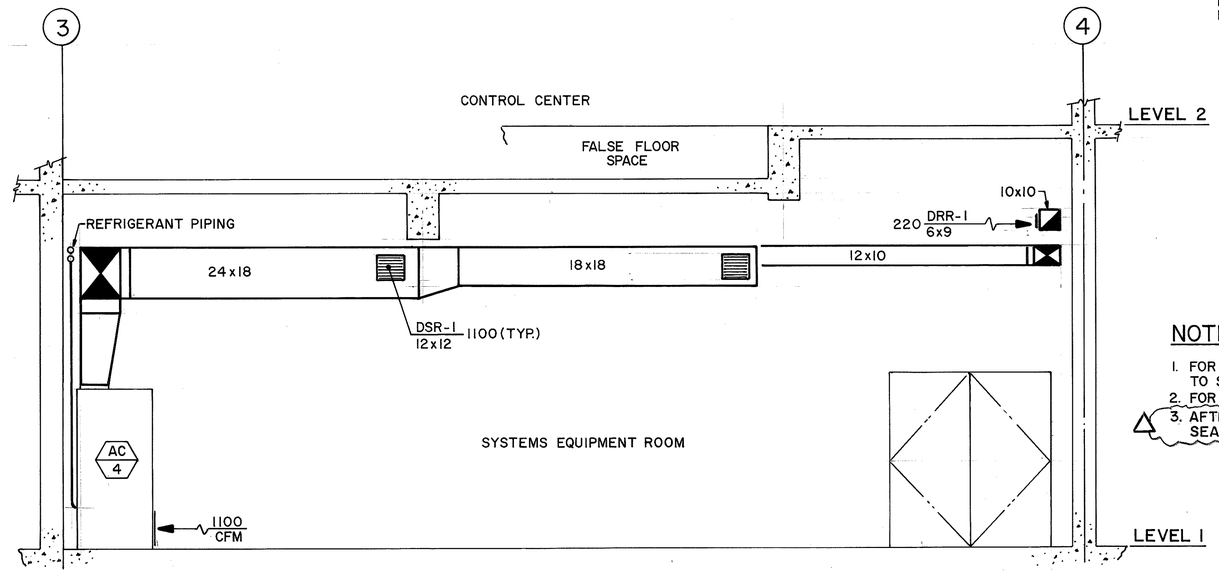

SECTION A
SCALE: 3/8"=1'-0"
MC3 | MC1

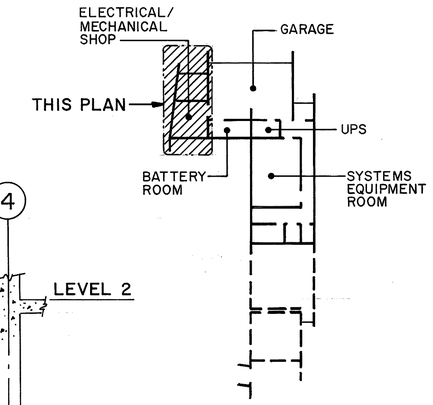

KEY PLAN

NOTES:

1. FOR LEGEND AND GENERAL NOTES REFER TO SHEET NO. MI.
2. FOR FAN SCHEDULE REFER TO SHEET NO. M5.
3. AFTER INSTALLATION OF REFRIGERANT PIPING SEAL OPENING BETWEEN PIPING AND SLEEVE.

GRAPHIC SCALE
1' 0 1' 2' 3' 4' 5'
3/8"=1'-0"

THIS WORK WAS PREPARED BY ME OR UNDER MY SUPERVISION

JOHN N. QUE
REGISTERED PROFESSIONAL ENGINEER
No. 6503-M
HAWAII, U.S.A.

DATE	REVISION
11/23/94	REV. PER DCN66-054

STATE OF HAWAII
DEPARTMENT OF TRANSPORTATION
HIGHWAYS DIVISION

HVAC – LEVEL I
PARTIAL PLAN & SECTIONS
CONTROL BUILDING

INTERSTATE ROUTE H-3
F.A.I. PROJ. NO. I-H3-1(66)

SCALE: 3/8"=1'-0" DATE: APR 1992

SHEET NO. MC3 OF 19 SHEETS

ORIGINAL PLAN		DATE
	SURVEY PLOTTED BY	
	DRAWN BY D. E. DRYDEN	01/06/90
NOTE BOOK	TRACED BY	
	DESIGNED BY D. E. DRYDEN	01/04/90
No.	QUANTITIES BY	
	CHECKED BY J. N. QUE	08/01/90

FED. ROAD DIST. NO.	STATE	FED. AID PROJ. NO.	FISCAL YEAR	SHEET NO.	TOTAL SHEETS
HAWAII	HAW.	I-H3-1(66)	1992	58	440

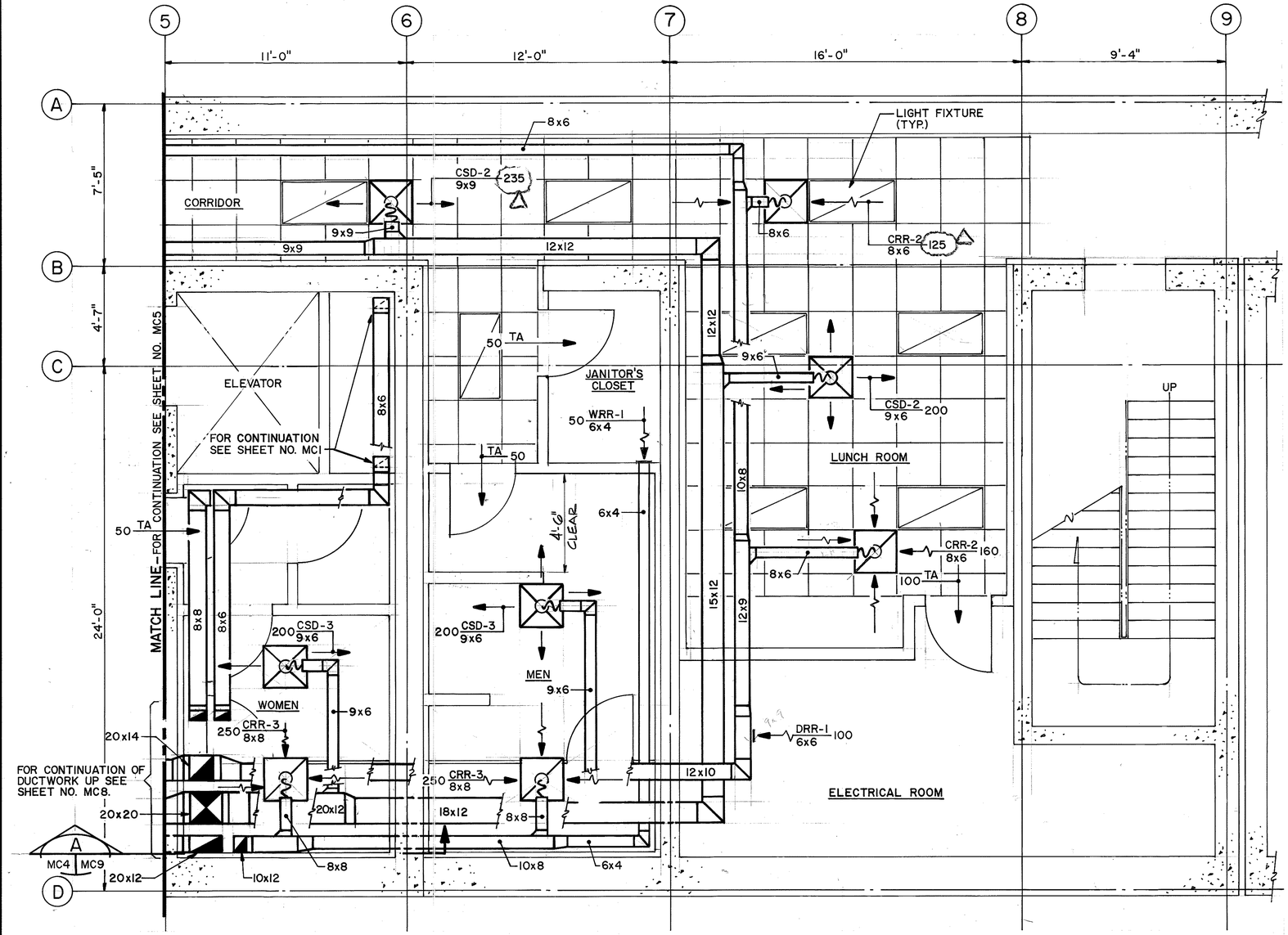

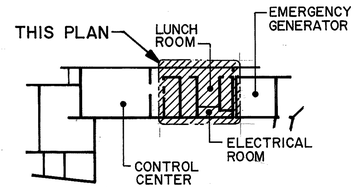

KEY PLAN

NOTES:

1. FOR LEGEND AND GENERAL NOTES REFER TO SHEET NO. M1
2. FOR AIR DISTRIBUTION DEVICE SCHEDULE REFER TO SHEET NO. M6

DATE	REVISION
11/23/94	REV. PER DCN 66-054
1/18/94	REV. CORRIDOR SUPPLY AND RETURN CFM PER DCN 66-030
2/8/93	REVISED WALL LOCATION BETWEEN MEN'S TOILET AND J.C. IN ACCORDANCE WITH ADA REGULATIONS PER DCN 66-001

STATE OF HAWAII
DEPARTMENT OF TRANSPORTATION
HIGHWAYS DIVISION

HVAC
LEVEL 2 PARTIAL PLAN-1
CONTROL BUILDING

INTERSTATE ROUTE H-3
F.A.I. PROJ. NO. I-H3-1(66)

SCALE: 3/8"=1'-0" DATE: APR 1992

SHEET NO. MC4 OF 19 SHEETS

GRAPHIC SCALE
1' 0 1' 2' 3' 4' 5'
3/8"=1'-0"

JOHN N. QUE
REGISTERED PROFESSIONAL ENGINEER
No. 6503-M
HAWAII, U.S.A.

THIS WORK WAS PREPARED BY ME OR UNDER MY SUPERVISION

ORIGINAL PLAN		DATE
	SURVEY PLOTTED BY	
	DRAWN BY D. E. DRYDEN	04/16/90
NOTE BOOK	TRACED BY	
	DESIGNED BY D. E. DRYDEN	04/12/90
	QUANTITIES BY	
No.	CHECKED BY J. N. QUE	05/01/90

FED. ROAD DIST. NO.	STATE	FED. AID PROJ. NO.	FISCAL YEAR	SHEET NO.	TOTAL SHEETS
HAWAII	HAW.	I-H3-1(66)	1992	59	440

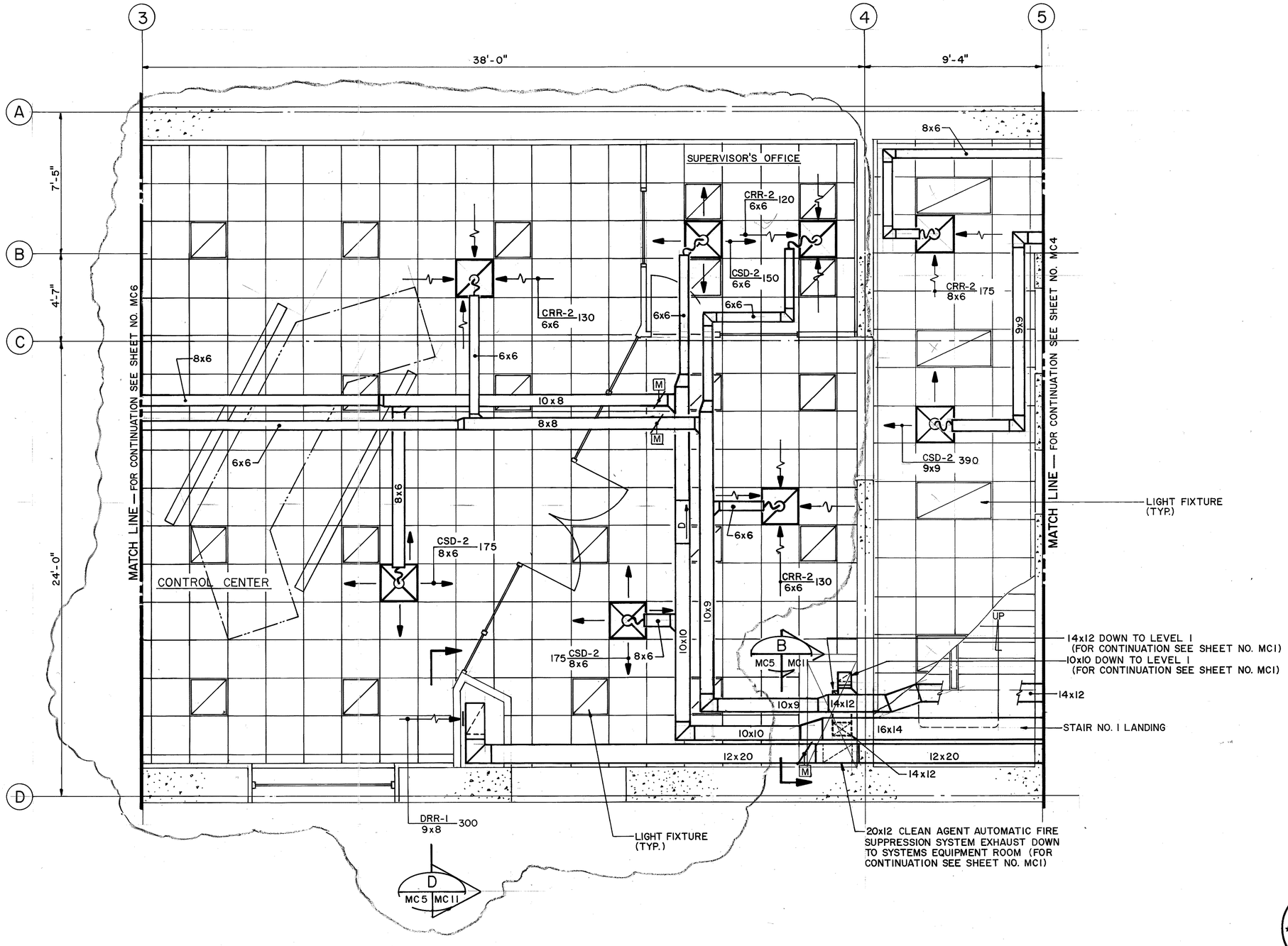

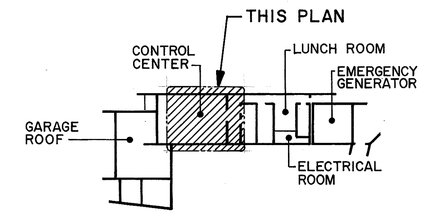

KEY PLAN

NOTES:

1. FOR LEGEND AND GENERAL NOTES REFER TO SHEET NO. M1
2. FOR AIR DISTRIBUTION DEVICE SCHEDULE REFER TO SHEET NO. M6

DATE	REVISION
12/16/94	REV. PER DCN 66-054
1/25/94	REV. PER DCN 66-034
1/6/94	REVISED CONTROL CENTER LAYOUT PER DCN 66-030

ORIGINAL PLANS	SURVEY PLOTTED BY D. E. DRYDEN	DATE 01/10/90
	HIGHWAYS BY	
	TRACED BY D. E. DRYDEN	01/08/90
NOTE BOOK	DESIGNED BY	
	QUANTITIES BY J. N. QUE	06/01/90
No.	CHECKED BY	

GRAPHIC SCALE
1' 0 1' 2' 3' 4' 5'
3/8"=1'-0"

JOHN N. QUE
REGISTERED PROFESSIONAL ENGINEER
No. 6503-M
HAWAII, U.S.A.

THIS WORK WAS PREPARED BY ME OR UNDER MY SUPERVISION

STATE OF HAWAII
DEPARTMENT OF TRANSPORTATION
HIGHWAYS DIVISION

HVAC
LEVEL 2 PARTIAL PLAN-2
CONTROL BUILDING

INTERSTATE ROUTE H-3
F.A.I. PROJ. NO. I-H3-1(66)

SCALE: 3/8"=1'-0" DATE: APR 1992

SHEET NO. MC5 OF 19 SHEETS

FED. ROAD DIST. NO.	STATE	FED. AID PROJ. NO.	FISCAL YEAR	SHEET NO.	TOTAL SHEETS
HAWAII	HAW.	I-H3-1(66)	1992	60	440

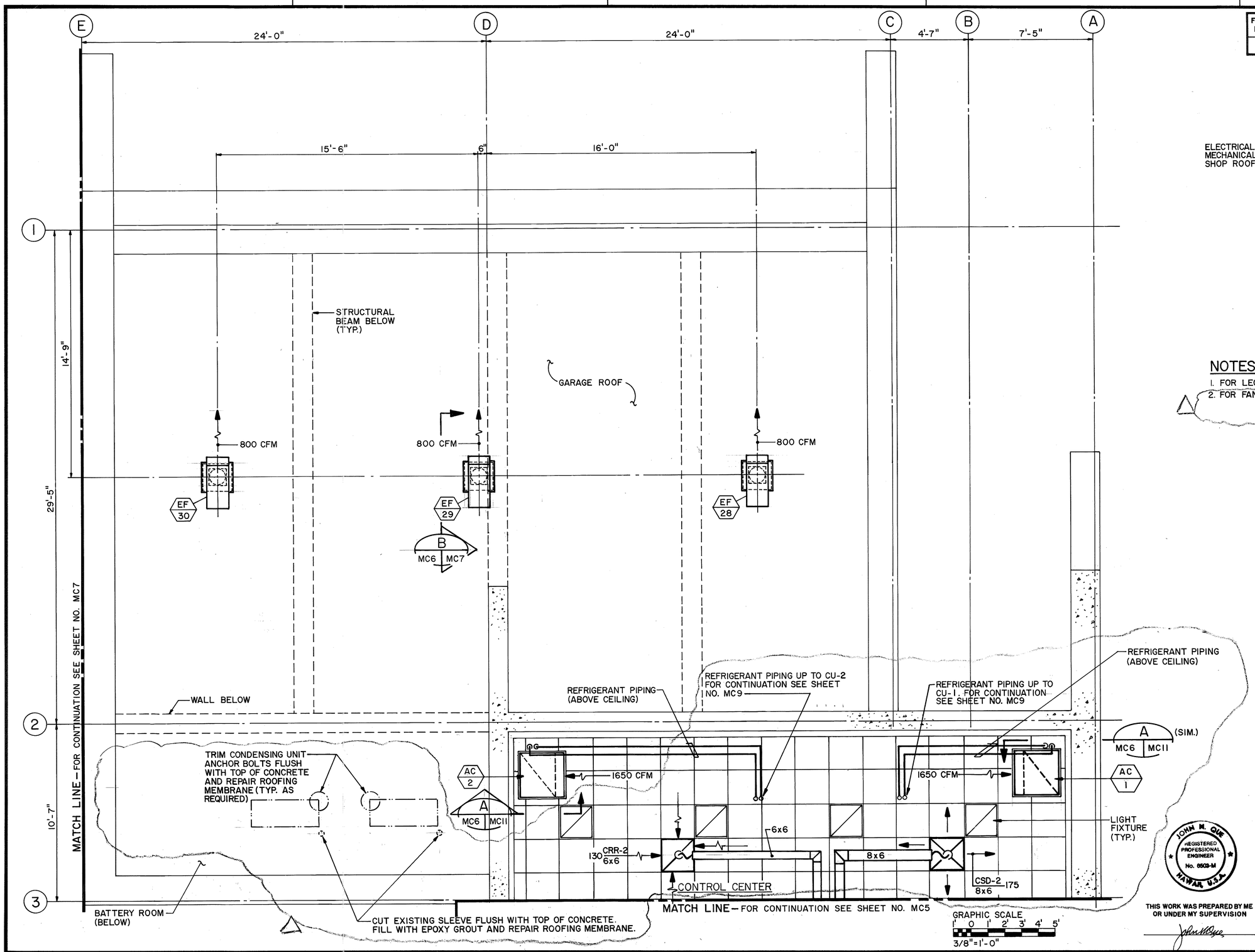

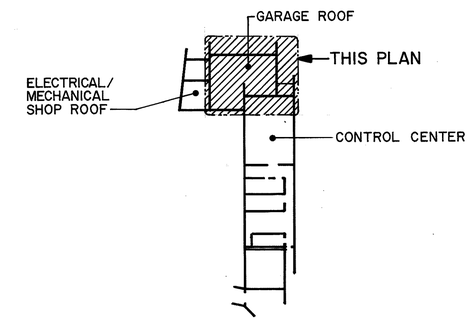

KEY PLAN

NOTES:

1. FOR LEGEND AND GENERAL NOTES REFER TO SHEET NO. M1.
2. FOR FAN SCHEDULE REFER TO SHEET NO. M5.

DATE	REVISION
11/23/94	REV. PER DCN 66-054
1/7/94	REVISED CONTROL CENTER LAYOUT PER DCN 66-030

STATE OF HAWAII
DEPARTMENT OF TRANSPORTATION
HIGHWAYS DIVISION

HVAC

LEVEL 2 PARTIAL PLAN-3

CONTROL BUILDING

INTERSTATE ROUTE H-3
F.A.I. PROJ. NO. I-H3-1(66)

SCALE: 3/8"=1'-0" DATE: APR 1992

SHEET NO. MC6 OF 19 SHEETS

JOHN N. QUE REGISTERED PROFESSIONAL ENGINEER No. 6503-M HAWAII, U.S.A.

THIS WORK WAS PREPARED BY ME OR UNDER MY SUPERVISION

ORIGINAL PLAN		DATE
	SURVEY PLOTTED BY	
	DRAWN BY D. E. DRYDEN	01/10/90
	TRACED BY	
	TECHNICAL REVIEW	01/06/90
NOTE BOOK	DESIGNED BY D. E. DRYDEN	
	QUANTITIES BY	
	CHECKED BY J. N. QUE	05/01/90
No.		

FED. ROAD DIST. NO.	STATE	FED. AID PROJ. NO.	FISCAL YEAR	SHEET NO.	TOTAL SHEETS
HAWAII	HAW.	I-H3-1(66)	1992	61	440

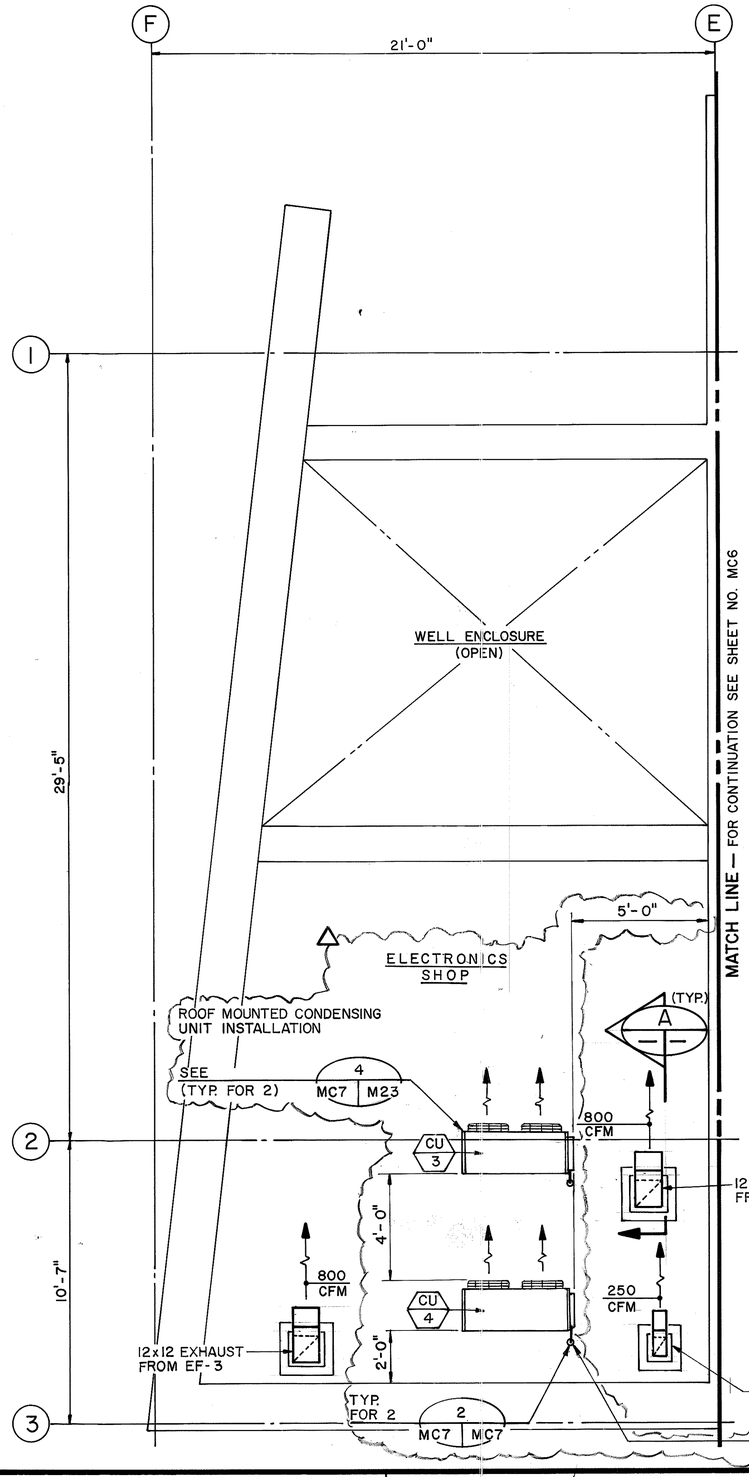

LEVEL 2 PARTIAL PLAN – 4
SCALE: 3/8"=1'-0"

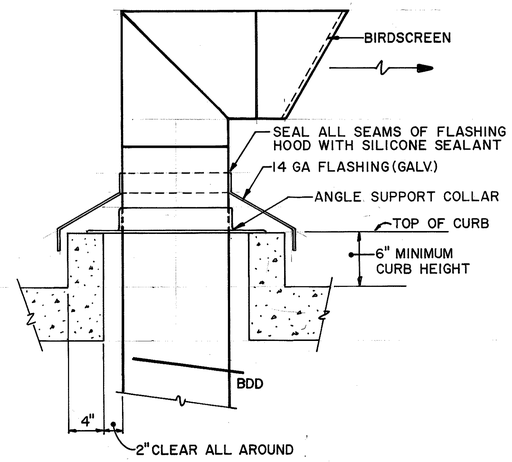

SECTION A
NO SCALE
MC7 MC7
MC8

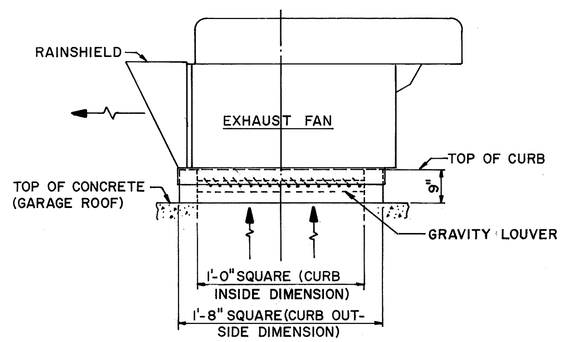

SECTION B
NO SCALE
MC6 MC7

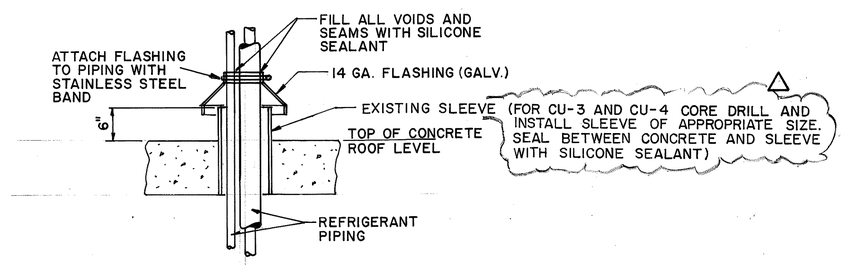

DETAIL 2
NO SCALE
MC7 MC7
MC9

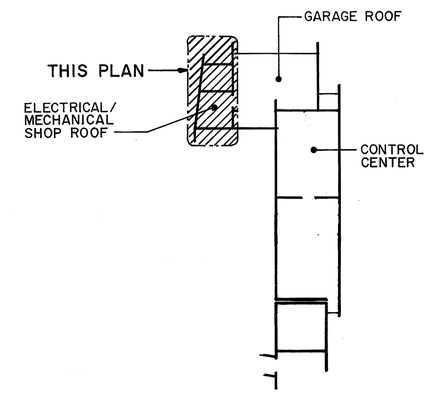

KEY PLAN

NOTES:

1. FOR LEGEND AND GENERAL NOTES REFER TO SHEET NO. M1.

GRAPHIC SCALE
1' 0 1' 2' 3' 4' 5'
3/8" = 1'-0"

JOHN N. QUE
REGISTERED PROFESSIONAL ENGINEER
No. 6503-M
HAWAII, U.S.A.

THIS WORK WAS PREPARED BY ME OR UNDER MY SUPERVISION

DATE	REVISION
11/23/94	REV. PER DCN 66-054
1/12/94	DELETED DETAIL '1' PER DCN 66-030

STATE OF HAWAII
DEPARTMENT OF TRANSPORTATION
HIGHWAYS DIVISION

HVAC—LEVEL 2 PARTIAL PLAN, SECTIONS & DETAILS

CONTROL BUILDING

INTERSTATE ROUTE H-3
F.A.I. PROJ. NO. I-H3-1(66)

SCALE: 3/8"=1'-0" DATE: APR 1992

SHEET NO. MC7 OF 19 SHEETS

		DATE
ORIGINAL PLAN	SURVEY PLOTTED BY	
	DRAWN BY D. E. DRYDEN	01/12/90
NOTE BOOK	TRACED BY	
	TRACED BY D. E. DRYDEN	01/04/90
No.	DESIGNED BY	
	QUANTITIES BY	
	CHECKED BY J. N. QUE	06/01/90

FED. ROAD DIST. NO.	STATE	FED. AID PROJ. NO.	FISCAL YEAR	SHEET NO.	TOTAL SHEETS
HAWAII	HAW.	I-H3-1(66)	1992	62	440

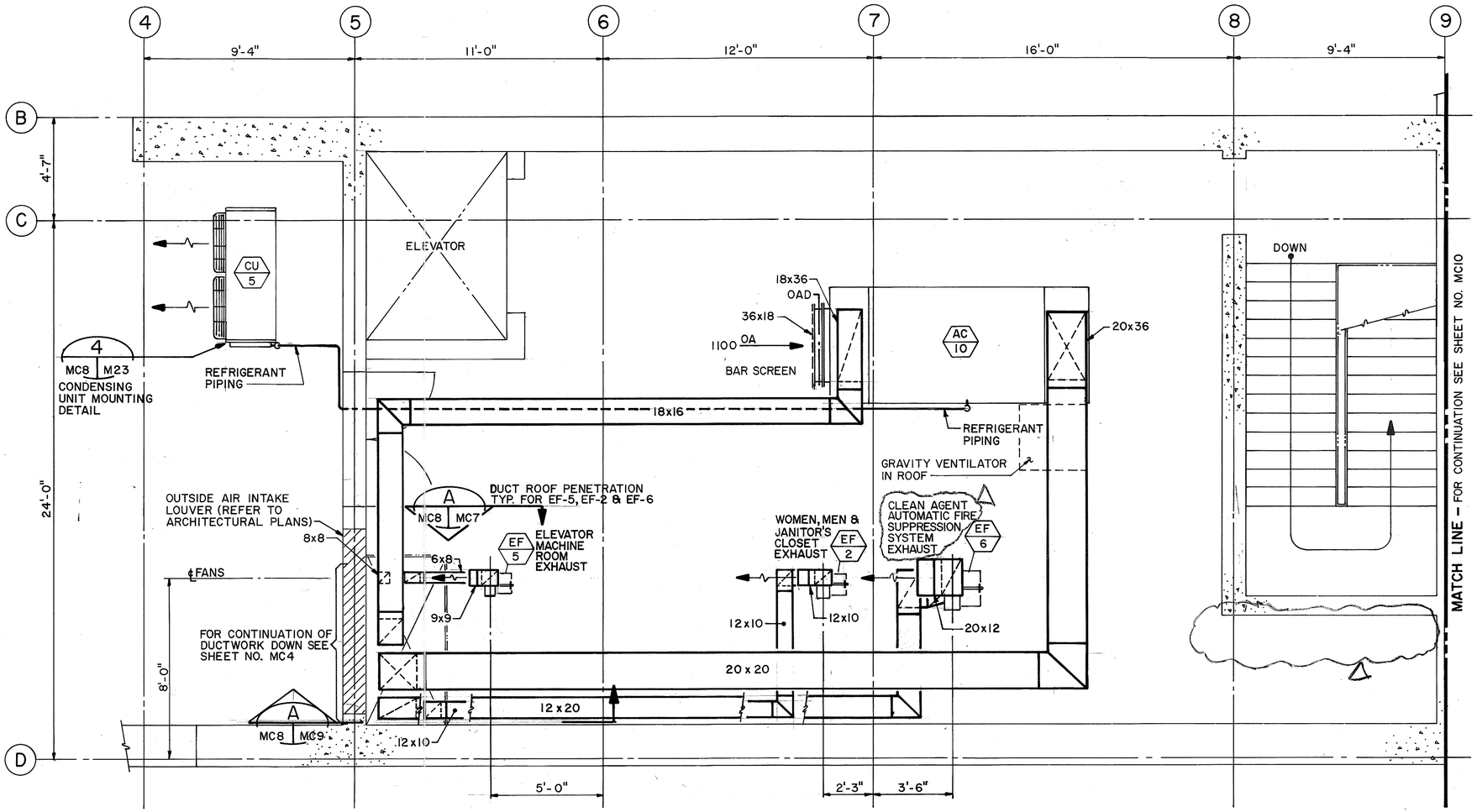

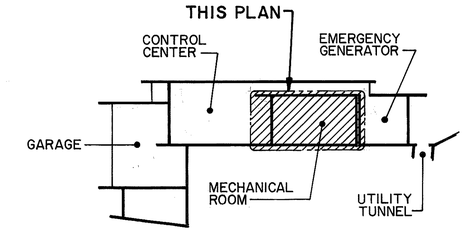

KEY PLAN

NOTES:

1. FOR BUILDING AIR CONDITIONING UNIT SCHEDULE REFER TO SHEET NO. M3
2. FOR FAN SCHEDULE REFER TO SHEET NO. M5.
3. FOR CONDENSING UNIT SCHEDULE REFER TO SHEET NO. M3

SURVEY PLOTTED BY	D. E. DRYDEN — DATE 04/24/90
DRAWN BY	" "
TRACED BY	" "
DESIGNED BY	D. E. DRYDEN — " 01/09/90
QUANTITIES BY	" "
CHECKED BY	J. N. QUE — " 06/19/90

ORIGINAL PLAN — NOTE BOOK — No.

GRAPHIC SCALE
1' 0 1' 2' 3' 4' 5'
3/8" = 1'-0"

JOHN N. QUE — REGISTERED PROFESSIONAL ENGINEER No. 6503-M — HAWAII, U.S.A.

THIS WORK WAS PREPARED BY ME OR UNDER MY SUPERVISION

DATE	REVISION
1/25/94	REV. PER DCN 66-034
1/18/94	REV. DETAIL NO. & REF. PER DCN 66-030

STATE OF HAWAII
DEPARTMENT OF TRANSPORTATION
HIGHWAYS DIVISION

HVAC - LEVEL 3
MECHANICAL ROOM PLAN
CONTROL BUILDING

INTERSTATE ROUTE H-3
F.A.I. PROJ. NO. I-H3-1(66)

SCALE: 3/8"=1'-0" DATE: APR 1992

SHEET NO. MC8 OF 19 SHEETS

FED. ROAD DIST. NO.	STATE	FED. AID PROJ. NO.	FISCAL YEAR	SHEET NO.	TOTAL SHEETS
HAWAII	HAW.	I-H3-1(66)	1992	63	440

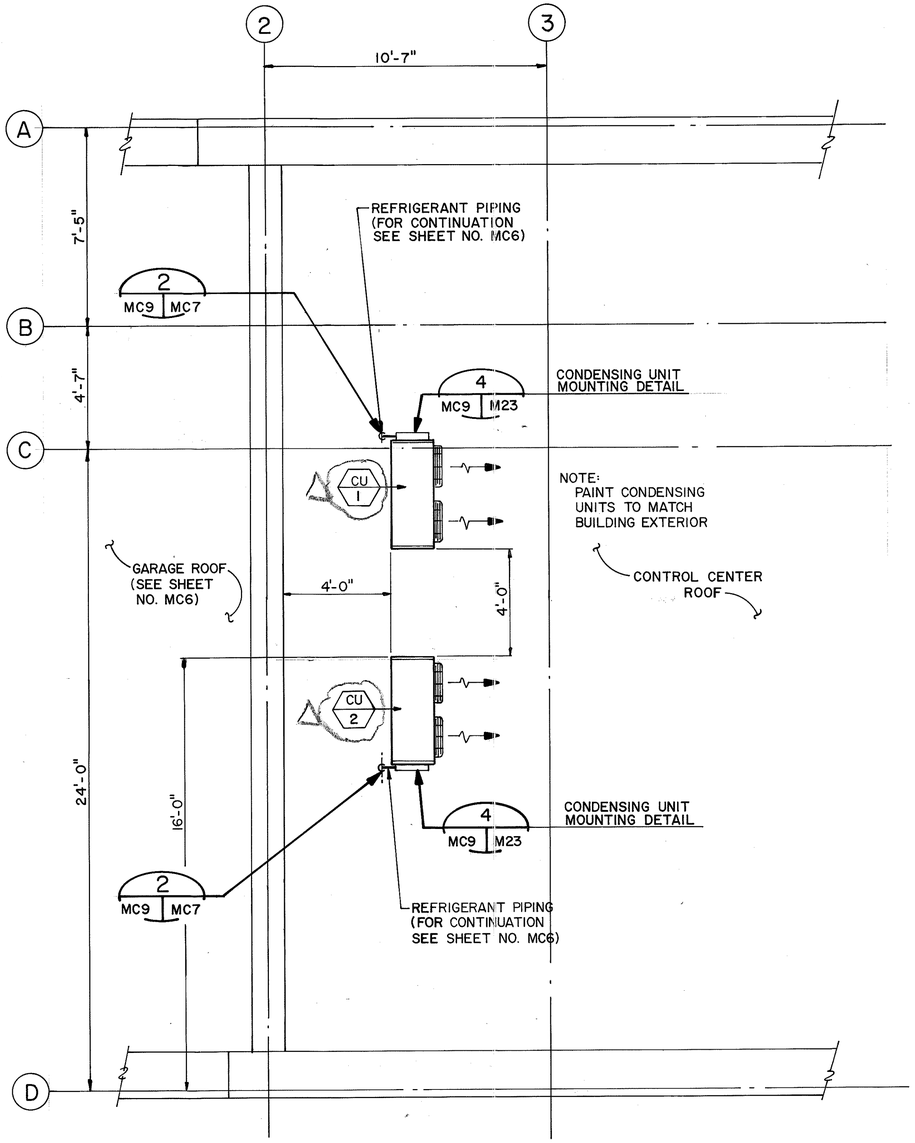

PARTIAL PLAN
3/8"=1'-0"

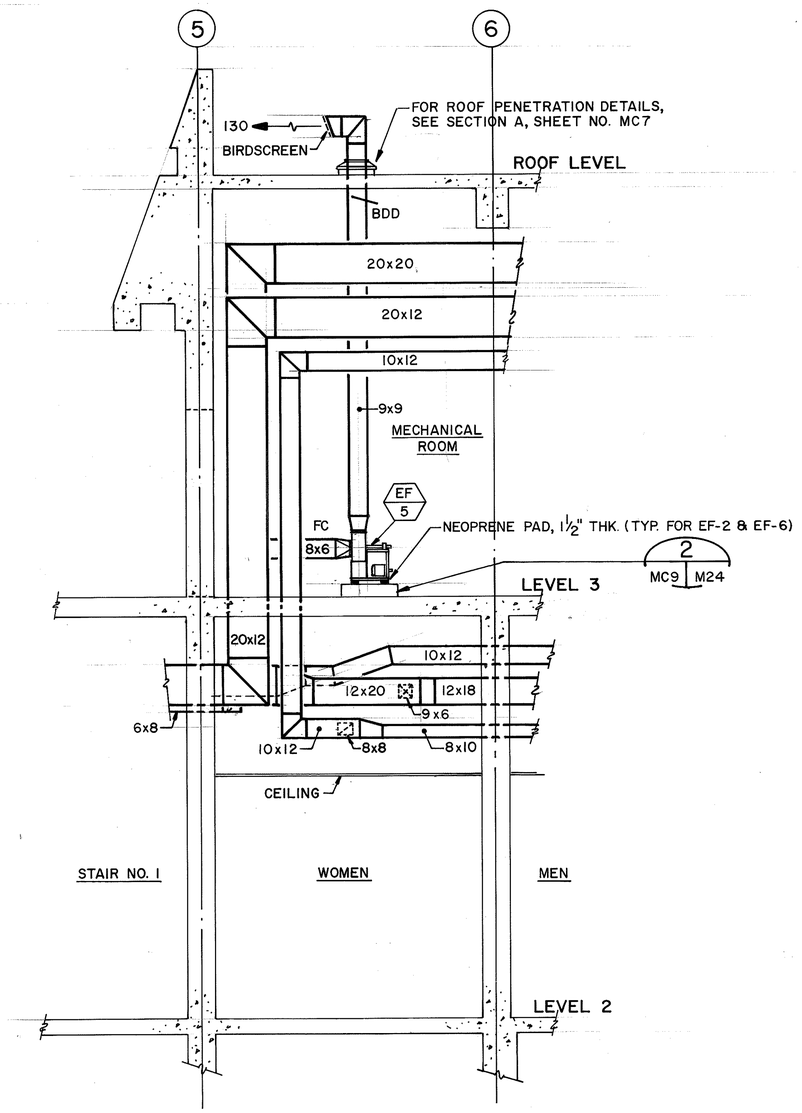

SECTION A
3/8"=1'-0"
MC4 MC9 / MC8

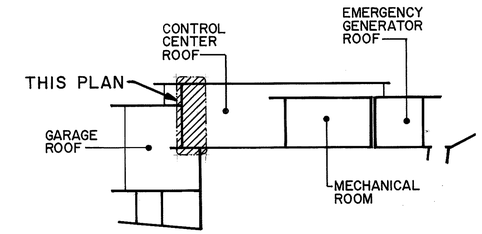

KEY PLAN

NOTES:

1. FOR LEGEND AND GENERAL NOTES REFER TO SHEET NO. M1
2. FOR CONDENSING UNIT SCHEDULE REFER TO SHEET NO. M3

GRAPHIC SCALE
1' 0 1' 2' 3' 4' 5'
3/8"=1'-0"

JOHN N. QUE
REGISTERED PROFESSIONAL ENGINEER
No. 6503-M
HAWAII, U.S.A.

THIS WORK WAS PREPARED BY ME OR UNDER MY SUPERVISION

DATE	REVISION
11/23/94	REV. PER DCN 66-054
1/12/94	REV. CU TAG NO'S AND DETAIL REFERENCE PER DCN 66-030

STATE OF HAWAII
DEPARTMENT OF TRANSPORTATION
HIGHWAYS DIVISION

HVAC — LEVEL 3
PARTIAL PLAN & SECTION
CONTROL BUILDING
INTERSTATE ROUTE H-3
F.A.I. PROJ. NO. I-H3-1(66)

SCALE: 3/8"=1'-0" DATE: APR 1992

SHEET NO. MC9 OF 19 SHEETS

ORIGINAL PLAN	SURVEY PLOTTED BY	DATE
	DRAWN BY D. E. DRYDEN	04/18/90
	TRACED BY "	"
NOTE BOOK	DESIGNED BY D. E. DRYDEN	01/17/90
	QUANTITIES BY "	"
No.	CHECKED BY J. N. QUE	"

FED. ROAD DIST. NO.	STATE	FED. AID PROJ. NO.	FISCAL YEAR	SHEET NO.	TOTAL SHEETS
HAWAII	HAW.	I-H3-1(66)	1992	63	440

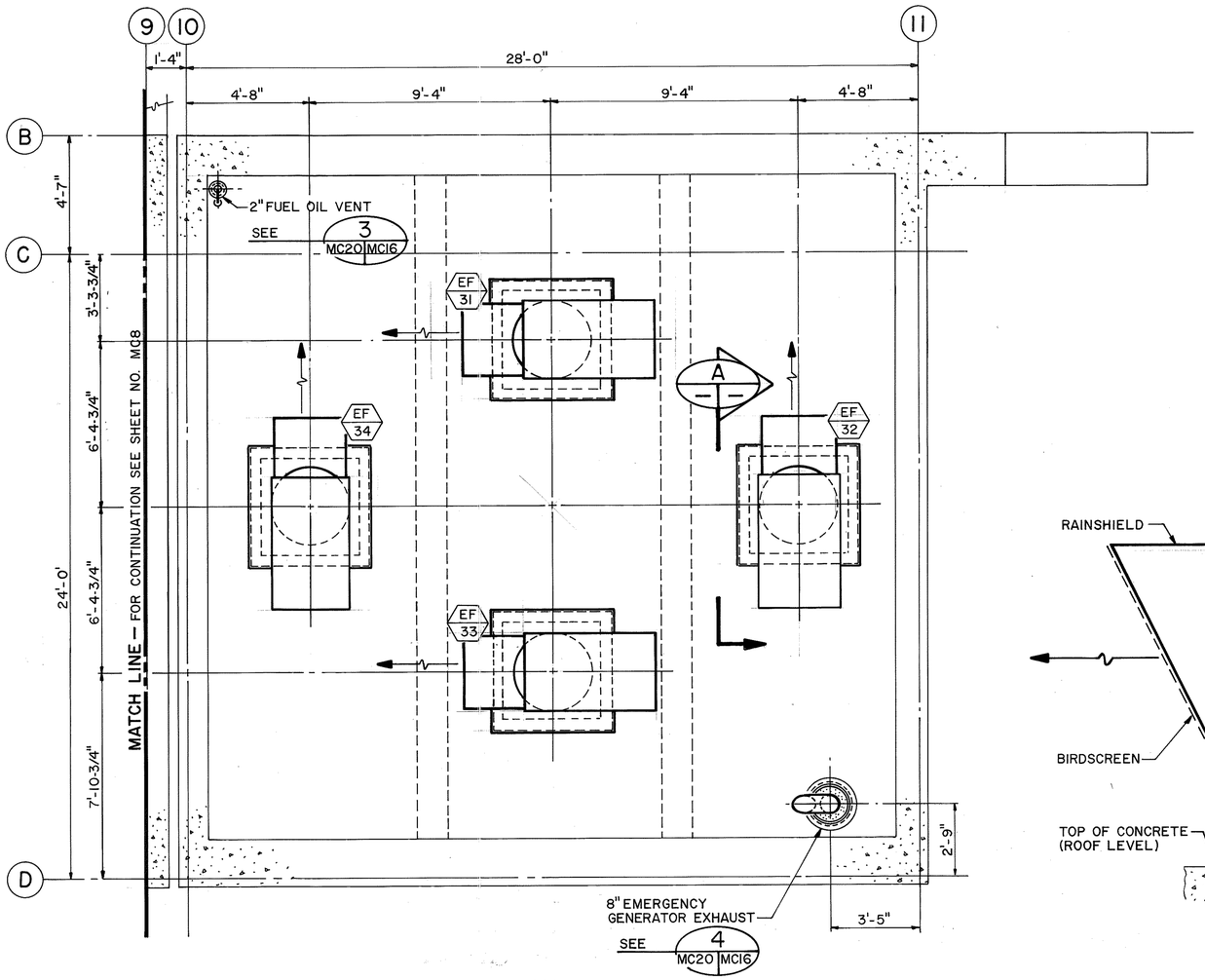

ROOF PLAN
3/8"=1'-0"

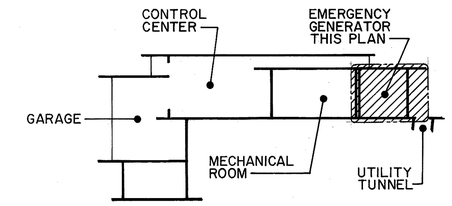

KEY PLAN

NOTES:

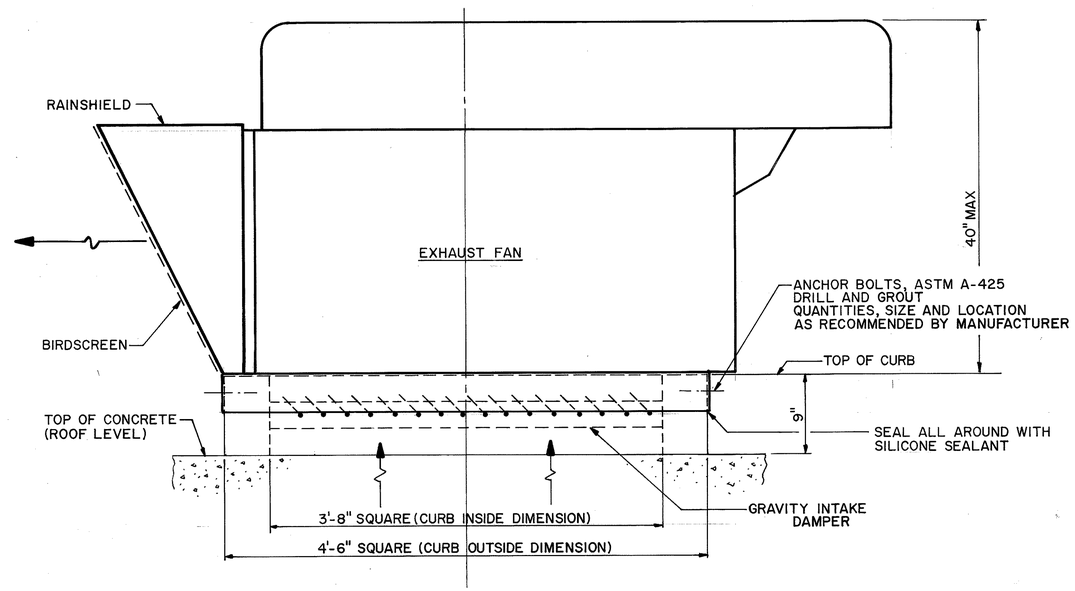

SECTION A
1-1/2"=1'-0"

GRAPHIC SCALES

1' 0 1' 2' 3' 4' 5' 10'
3/8"=1'-0"

1' 9" 6" 3" 0 1' 2'
1-1/2"=1'-0"

JOHN N. QUE
REGISTERED PROFESSIONAL ENGINEER
No. 6503-M
HAWAII, U.S.A.

THIS WORK WAS PREPARED BY ME OR UNDER MY SUPERVISION

DATE	REVISION

STATE OF HAWAII
DEPARTMENT OF TRANSPORTATION
HIGHWAYS DIVISION

HVAC — EMERGENCY GENERATOR
ROOF PLAN & SECTION
CONTROL BUILDING
INTERSTATE ROUTE H-3
F.A.I. PROJ. NO. I-H3-1(66)

SCALE: AS NOTED DATE: APR 1992

SHEET NO. MC10 OF 19 SHEETS

ORIGINAL PLAN	SURVEY PLOTTED BY	
	DRAWN BY D. E. DRYDEN	DATE 01/24/90
NOTE BOOK	TRACED BY D. E. DRYDEN	" 01/10/90
	DESIGNED BY	"
No.	QUANTITIES BY	"
	CHECKED BY J. N. QUE	" 06/01/90

FED. ROAD DIST. NO.	STATE	FED. AID PROJ. NO.	FISCAL YEAR	SHEET NO.	TOTAL SHEETS
HAWAII	HAW.	I-H3-1(66)	1992	65	440

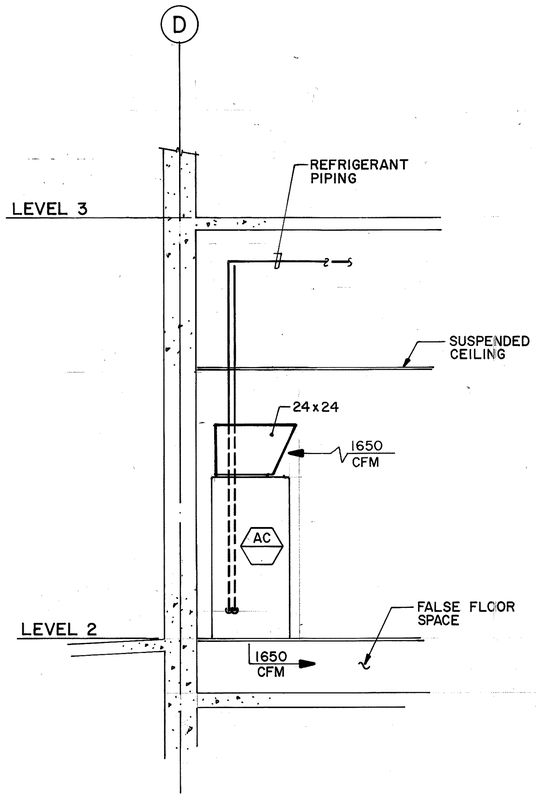

SECTION A
3/8"=1'-0"
MC6 | MC11

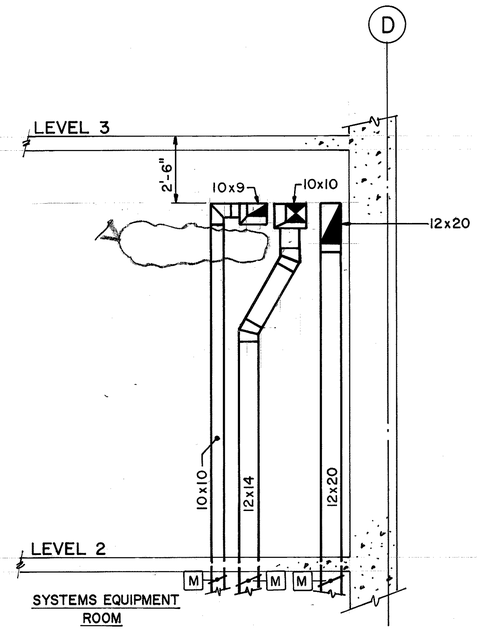

SECTION B
3/8"=1'-0"
MC5 | MC11

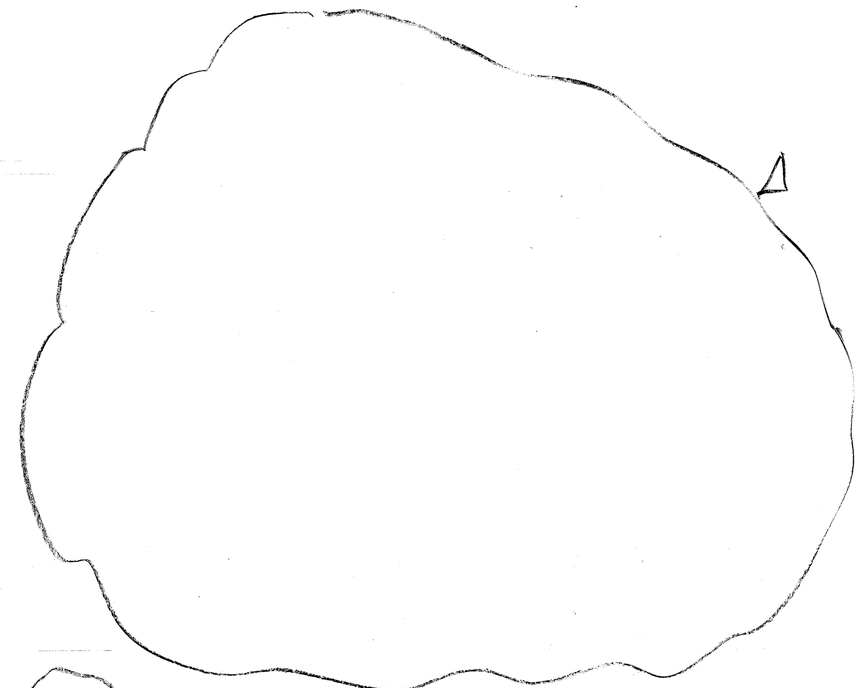

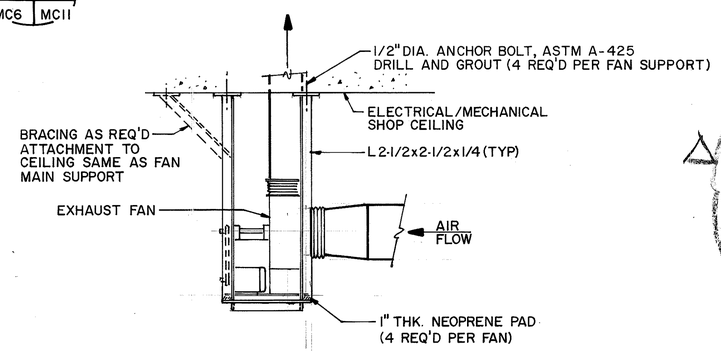

DETAIL 1
NO SCALE
MC3 | MC11

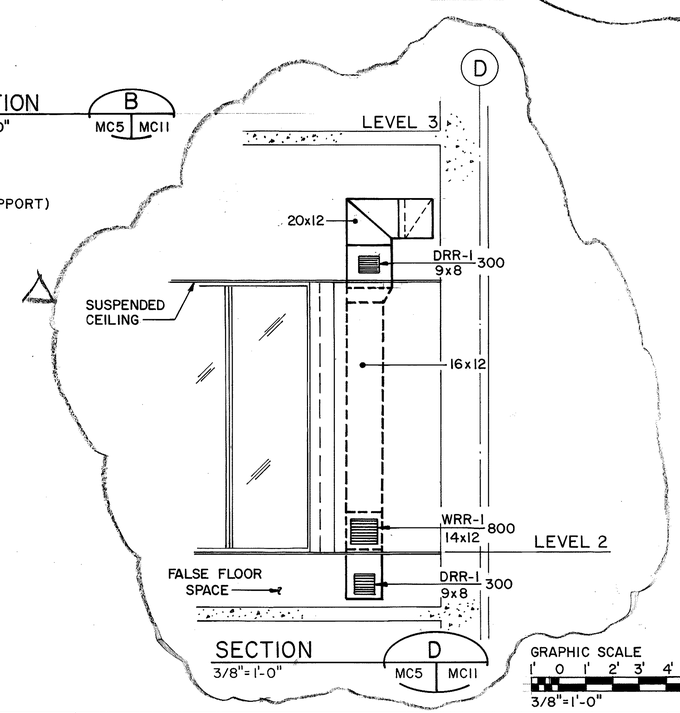

SECTION D
3/8"=1'-0"
MC5 | MC11

GRAPHIC SCALE
1' 0 1' 2' 3' 4' 5'
3/8"=1'-0"

12/16/94	REV. PER DCN 66-054A
1/19/94	REVISED SECTIONS 'A', 'B' & 'C' PER DCN 66-030
DATE	REVISION

JOHN N. QUE
REGISTERED PROFESSIONAL ENGINEER
No. 6503-M
HAWAII, U.S.A.

THIS WORK WAS PREPARED BY ME OR UNDER MY SUPERVISION

STATE OF HAWAII
DEPARTMENT OF TRANSPORTATION
HIGHWAYS DIVISION

HVAC
SECTIONS & DETAIL

CONTROL BUILDING

INTERSTATE ROUTE H-3
F.A.I. PROJ. NO. I-H3-1(66)

SCALE: 3/8"=1'-0" DATE: APR 1992

SHEET NO. MC11 OF 19 SHEETS

ORIGINAL PLANS	SURVEY PLOTTED BY	DATE
	DRAWN BY D. E. DRYDEN	04/11/90
	TRACED BY	04/09/90
NOTE BOOK	DESIGNED BY D. E. DRYDEN	
	QUANTITIES BY	06/01/90
NO.	CHECKED BY J. N. QUE	

FED. ROAD DIST. NO.	STATE	FED. AID PROJ. NO.	FISCAL YEAR	SHEET NO.	TOTAL SHEETS
HAWAII	HAW.	I-H3-1(66)	1992	66	440

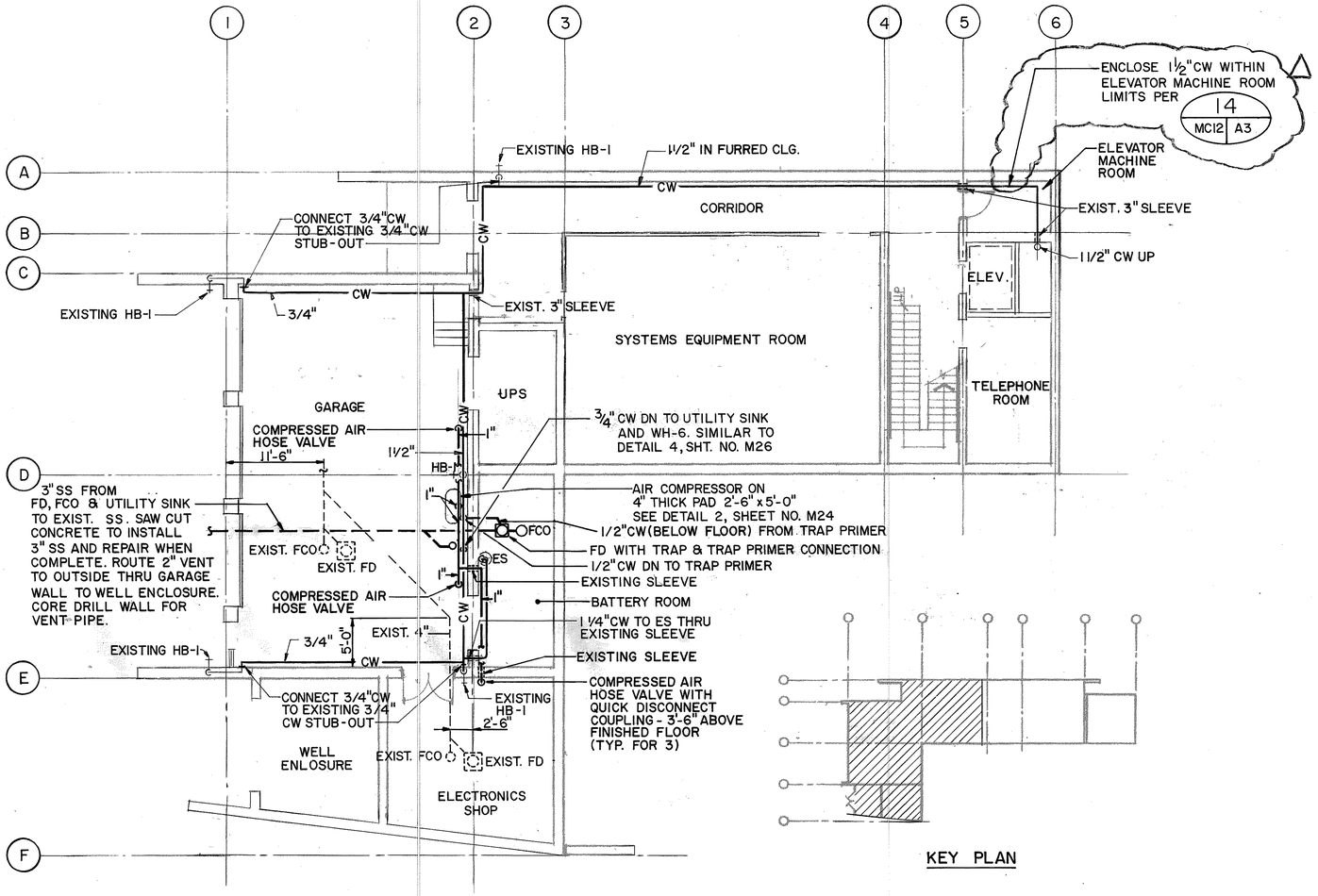

LEVEL 1 PLAN

KEY PLAN

FOR DETAIL AS-BUILT INFORMATION REFER TO CONSTRUCTION SUBMITTALS

GRAPHIC SCALE
8' 0' 8' 16'
1/8" = 1'-0"

JOHN N. QUE
REGISTERED PROFESSIONAL ENGINEER
No. 6503-M
HAWAII, U.S.A.

THIS WORK WAS PREPARED BY ME OR UNDER MY SUPERVISION

DATE	REVISION
9/19/94	REV. PER DCN 66-052
10/21/94	REV. PER DCN 66-051
7/22/92	ADDENDUM 1 - RELOCATED ES

STATE OF HAWAII
DEPARTMENT OF TRANSPORTATION
HIGHWAYS DIVISION

PLUMBING - LEVEL 1 PLAN

CONTROL BUILDING
INTERSTATE ROUTE H-3
F.A.I. PROJ. NO. I-H3-1(66)

SCALE: 1/8" = 1'-0" DATE: APR 1992

SHEET NO. MC12 OF 19 SHEETS

ADD. 66

		DATE
ORIGINAL PLAN	SURVEY PLOTTED BY	
	DRAWN BY B.F. BUNTI, JR.	12/28/89
NOTE BOOK	TRACED BY	
	DESIGNED BY P.L. LALOUE	12/14/89
	QUANTITIES BY	
No.	CHECKED BY J. N. QUE	06/01/90

FED. ROAD DIST. NO.	STATE	FED. AID PROJ. NO.	FISCAL YEAR	SHEET NO.	TOTAL SHEETS
HAWAII	HAW.	I-H3-1(66)	1992	67	440

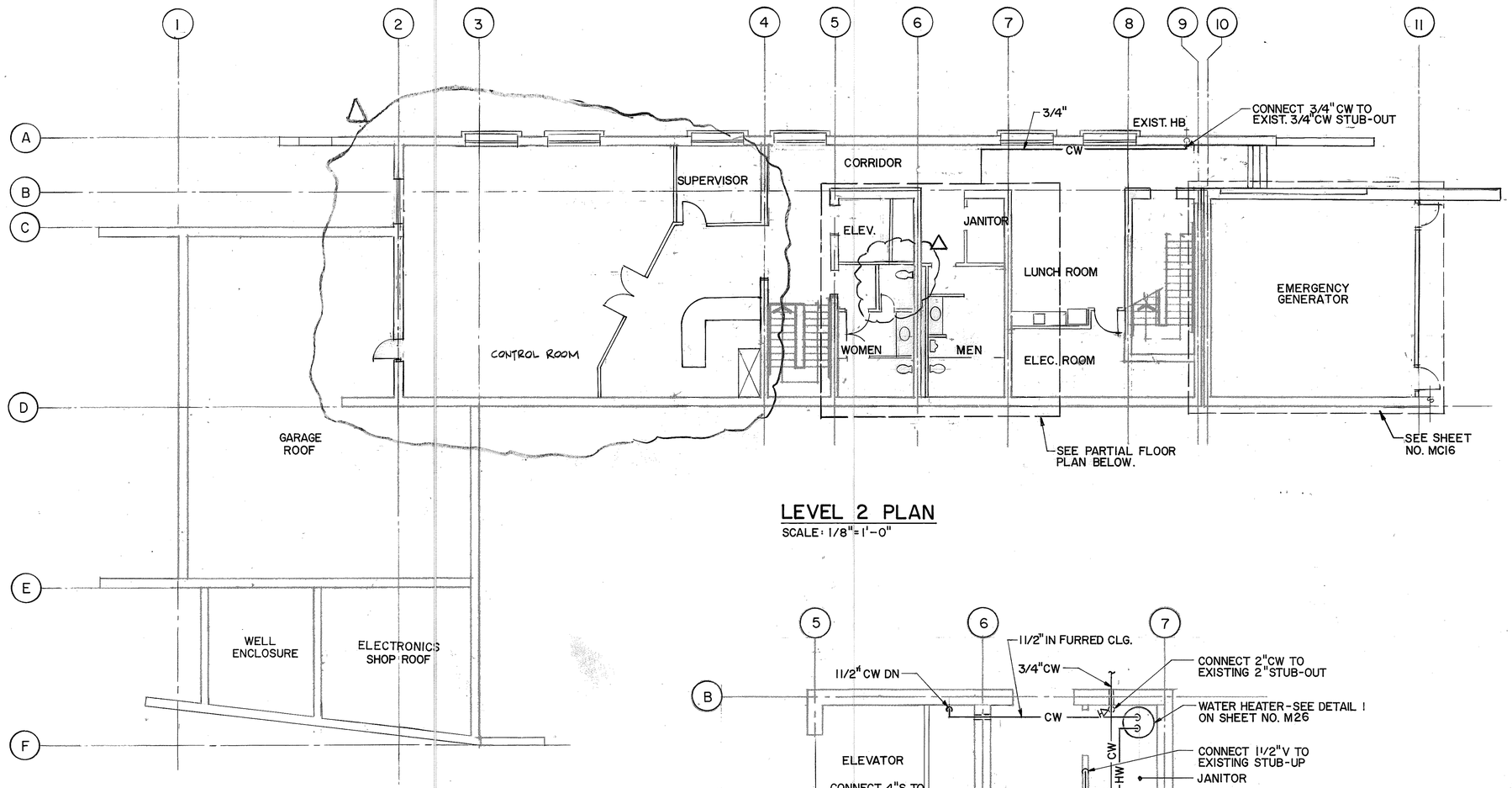

LEVEL 2 PLAN

SCALE: 1/8"=1'-0"

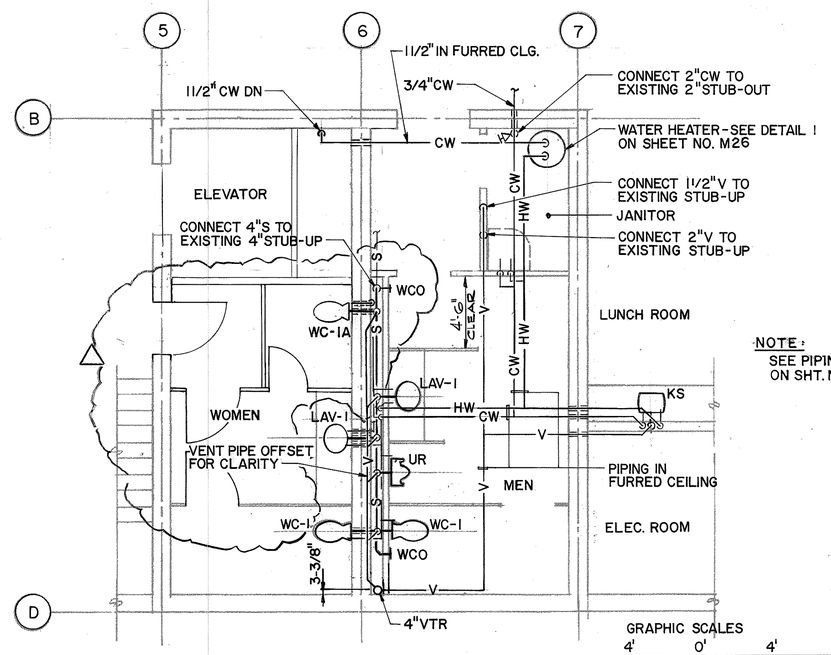

NOTE:
SEE PIPING DIAGRAMS ON SHT. NO. MC15

PARTIAL FLOOR PLAN

SCALE: 1/4"=1'-0"

GRAPHIC SCALES

4' 0' 4' 8'
1/4"=1'-0"

8' 0' 8' 16'
1/8"=1'-0"

JOHN N. QUE
REGISTERED PROFESSIONAL ENGINEER
No. 6503-M
HAWAII, U.S.A.

THIS WORK WAS PREPARED BY ME OR UNDER MY SUPERVISION

12/9/94	REV. PER DCN 66-054A
1/19/94	REV. TO REFLECT NEW CONTROL CENTER LAYOUT PER DCN 66-030
2/8/93	REVISED WALL LOCATION BETWEEN MEN'S TOILET AND J.C. IN ACCORDANCE WITH ADA REGULATIONS PER DCN 66-001
DATE	REVISION

STATE OF HAWAII
DEPARTMENT OF TRANSPORTATION
HIGHWAYS DIVISION

PLUMBING - LEVEL 2 PLANS

CONTROL BUILDING

INTERSTATE ROUTE H-3
F.A.I. PROJ. NO. I-H3-1(66)

SCALE: AS NOTED DATE: APR 1992

SHEET NO. MC13 OF 19 SHEETS

			DATE
ORIGINAL PLANS	SURVEY PLOTTED BY		
	DRAWN BY	B.Z. BUNTI, JR.	12/1/89
	TRACED BY		
NOTE BOOK	DESIGNED BY	P.L. LALOUE	11/16/89
	QUANTITIES BY		
No.	CHECKED BY	J.N. QUE	06/01/90

FED. ROAD DIST. NO.	STATE	FED. AID PROJ. NO.	FISCAL YEAR	SHEET NO.	TOTAL SHEETS
HAWAII	HAW.	I-H3-1(66)	1992	68	440

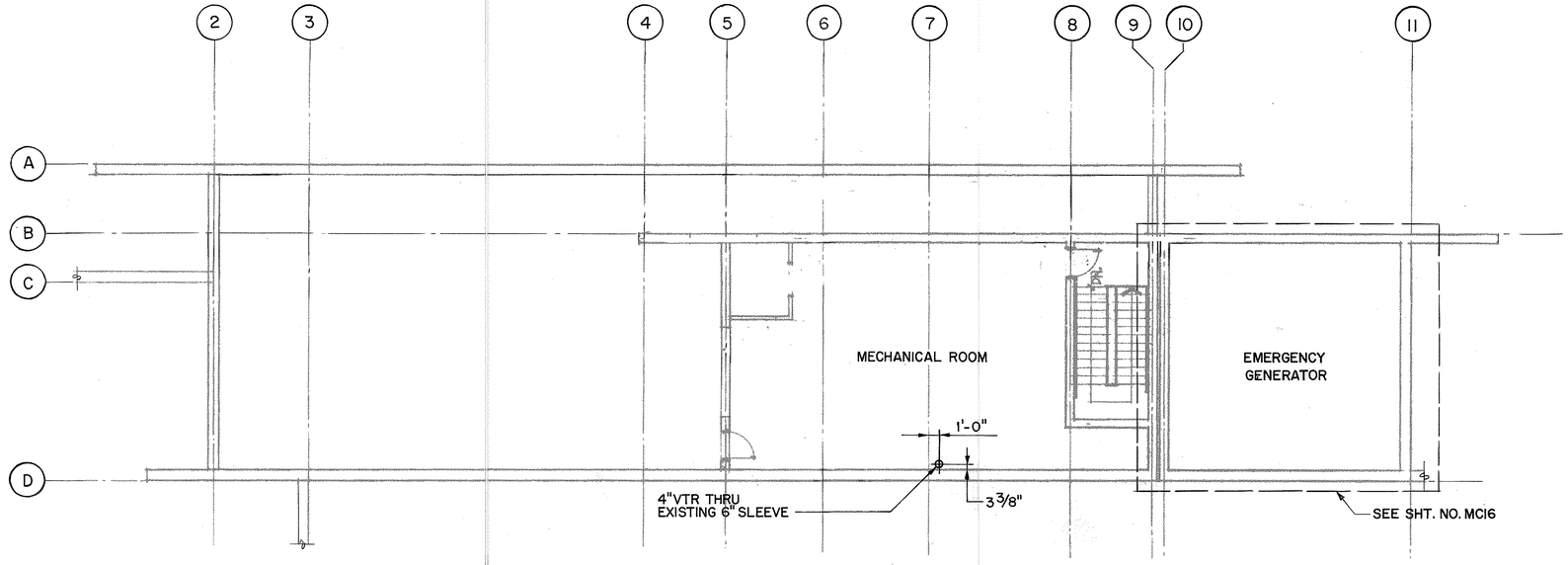

LEVEL 3 PLAN

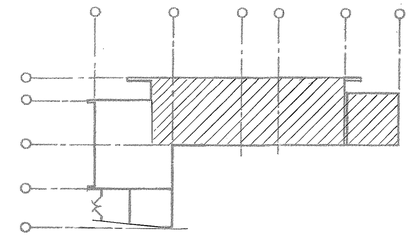

KEY PLAN

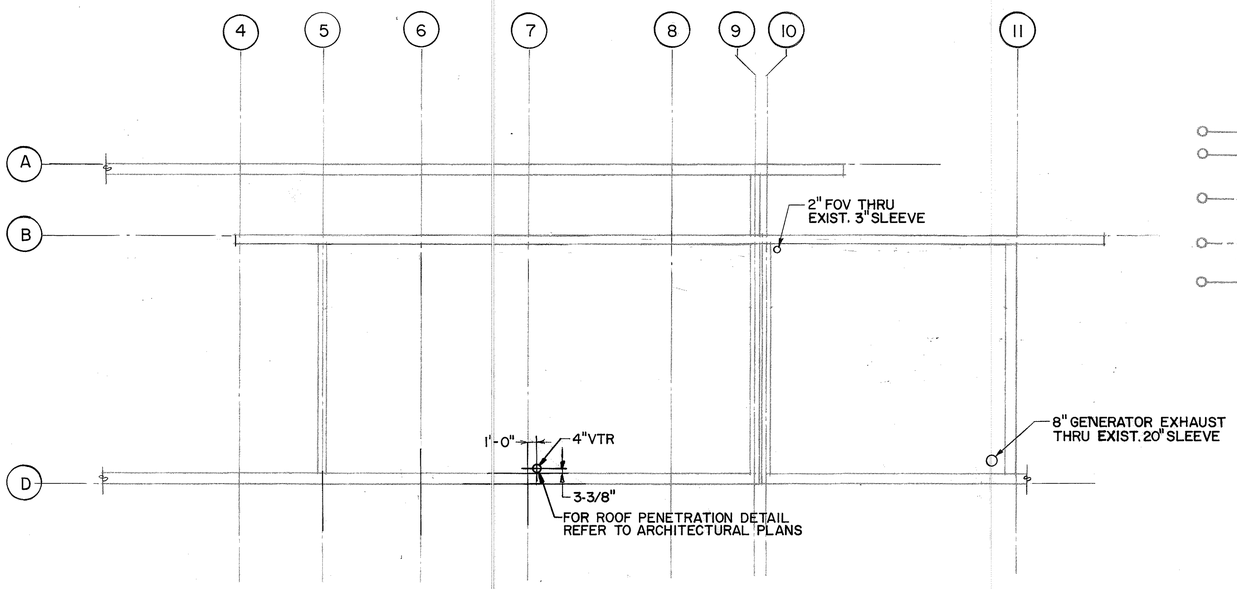

ROOF LEVEL PLAN

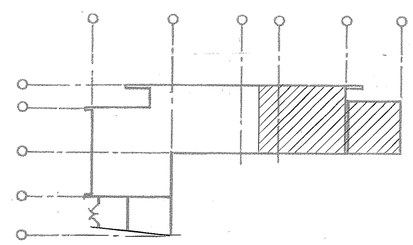

KEY PLAN

GRAPHIC SCALE

8' 0' 8' 16'

1/8" = 1'-0"

		DATE
SURVEY PLOTTED BY	B.F. BUNYI, JR.	
TRACED BY		12/26/89
DESIGNED BY	P.L.LALOUE	12/21/89
QUANTITIES BY		
CHECKED BY	J. N. QUE	06/01/90

ORIGINAL PLAN

NOTE BOOK

No.

JOHN N. QUE
REGISTERED PROFESSIONAL ENGINEER
No. 6503-M
HAWAII, U.S.A.

THIS WORK WAS PREPARED BY ME OR UNDER MY SUPERVISION

STATE OF HAWAII
DEPARTMENT OF TRANSPORTATION
HIGHWAYS DIVISION

PLUMBING - LEVEL 3 & ROOF PLANS

CONTROL BUILDING

INTERSTATE ROUTE H-3
F.A.I. PROJ. NO. I-H3-1 (66)

SCALE: 1/8" = 1'-0" DATE: APR 1992

SHEET NO. MC14 OF 19 SHEETS

FED. ROAD DIST. NO.	STATE	FED. AID PROJ. NO.	FISCAL YEAR	SHEET NO.	TOTAL SHEETS
HAWAII	HAW.	I-H3-1(66)	1992	69	440

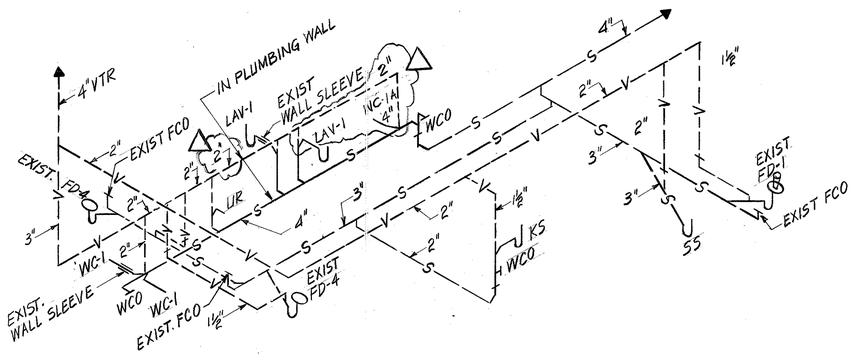

SANITARY PIPING DIAGRAM

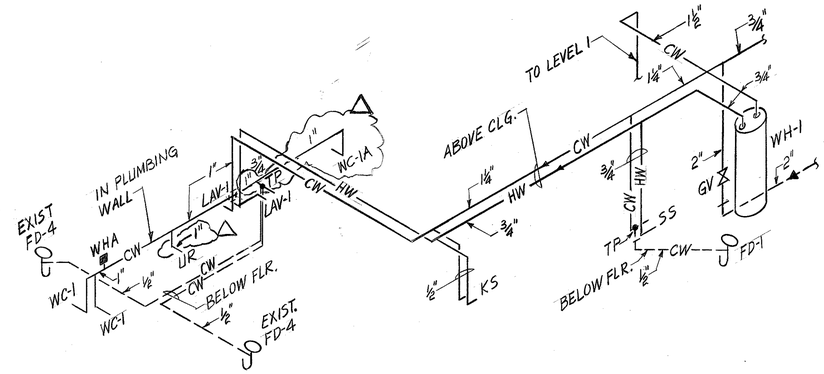

HOT & COLD WATER PIPING DIAGRAM

2/20/95	REV. PER DCN 66-054A
DATE	REVISION

STATE OF HAWAII
DEPARTMENT OF TRANSPORTATION
HIGHWAYS DIVISION

PLUMBING RISER DIAGRAMS

CONTROL BUILDING

INTERSTATE ROUTE H-3
F.A.I. PROJ. NO. I-H3-1(66)

SCALE: NONE DATE: APR. 1992

SHEET NO. MC15 OF 19 SHEETS

JOHN N. QUE
REGISTERED PROFESSIONAL ENGINEER
No. 6503-M
HAWAII, U.S.A.

THIS WORK WAS PREPARED BY ME OR UNDER MY SUPERVISION

ORIGINAL PLAN	SURVEY PLOTTED BY	
	DRAWN BY P. L. LALOUE	DATE 01/24/90
	TRACED BY	
	TRACED BY	
NOTE BOOK	DESIGNED BY P. L. LALOUE	12/13/89
	QUANTITIES BY	
No.	CHECKED BY J. N. QUE	06/01/90

FED. ROAD DIST. NO.	STATE	FED. AID PROJ. NO.	FISCAL YEAR	SHEET NO.	TOTAL SHEETS
HAWAII	HAW.	I-H3-1(66)	1992	70	440

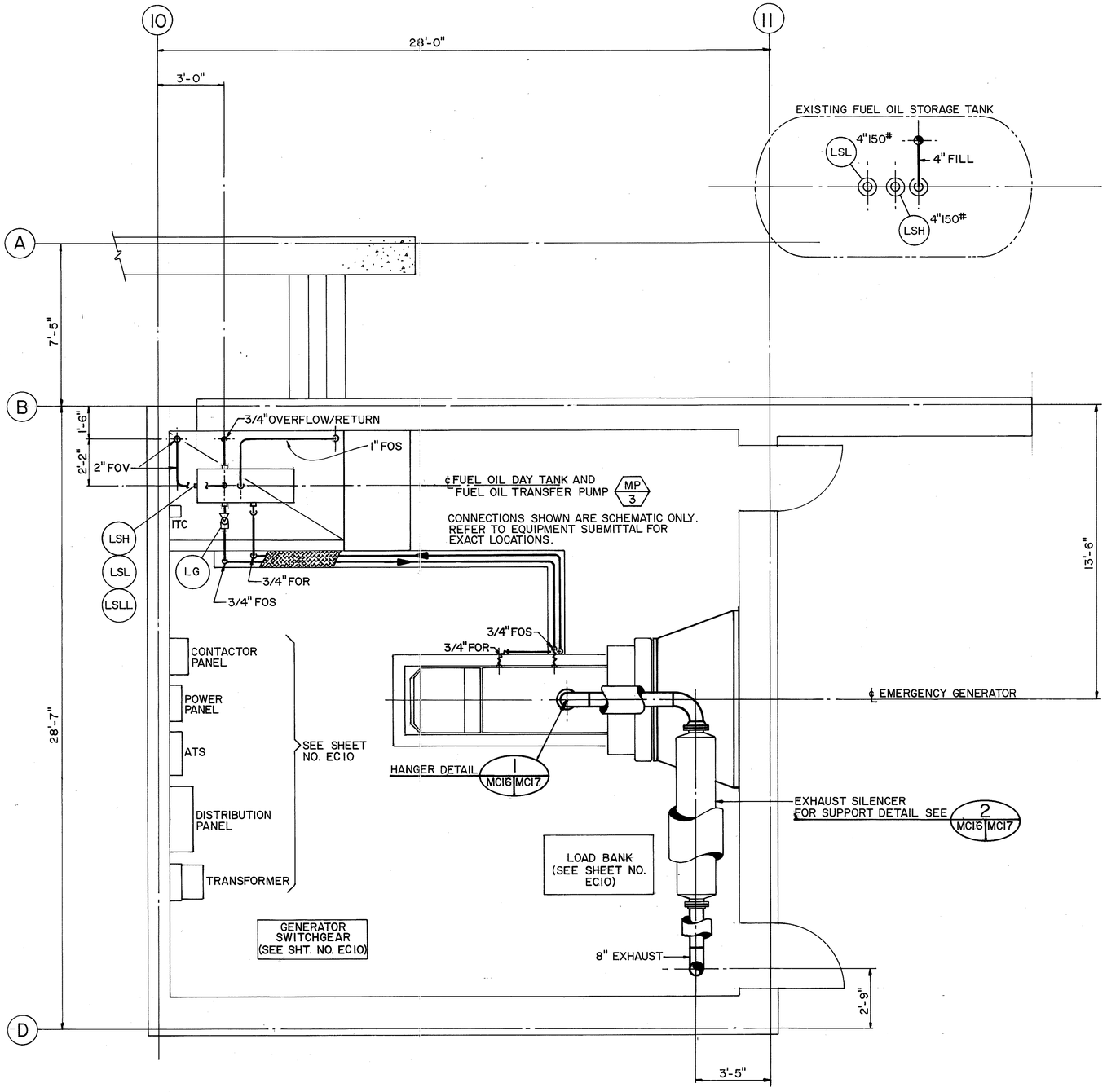

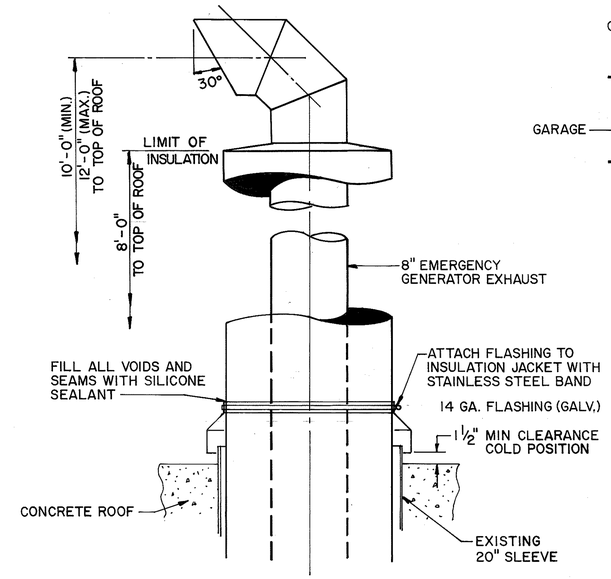

DETAIL 4
SCALE NONE
MC10 MC16

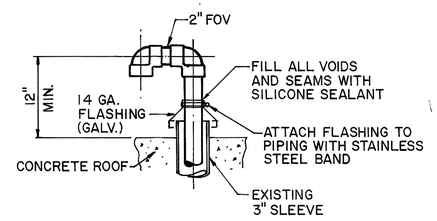

DETAIL 3
SCALE: NONE
MC10 MC16

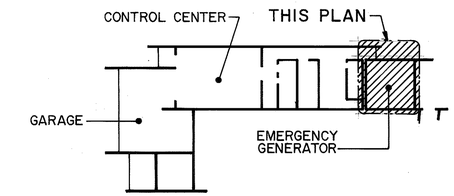

KEY PLAN

NOTES:

1. FOS = FUEL OIL SUPPLY
   FOR = FUEL OIL RETURN
   FOV = FUEL OIL VENT

FOR DETAIL AS-BUILT INFORMATION REFER TO CONSTRUCTION SUBMITTALS

DATE	REVISION
4/15/94	REV. DETAIL 4 PER DCN 66-040

GRAPHIC SCALE
1' 0 1' 2' 3' 4' 5'
3/8" = 1'-0"

JOHN N. QUE
REGISTERED PROFESSIONAL ENGINEER
No. 6503-M
HAWAII, U.S.A.

THIS WORK WAS PREPARED BY ME OR UNDER MY SUPERVISION

STATE OF HAWAII
DEPARTMENT OF TRANSPORTATION
HIGHWAYS DIVISION

EMERGENCY GENERATOR PLAN

CONTROL BUILDING

INTERSTATE ROUTE H-3
F.A.I. PROJ. NO. I-H3-1(66)

SCALE: 3/8" = 1'-0" DATE: APR 1992

SHEET NO. MC16 OF 19 SHEETS

		DATE
ORIGINAL PLAN	SURVEY PLOTTED BY	
	DRAWN BY D. E. DRYDEN	01/23/90
	TRACED BY	
NOTE BOOK	DESIGNED BY D. E. DRYDEN	01/23/90
	QUANTITIES BY	
No.	CHECKED BY J. N. QUE	05/01/90

FED. ROAD DIST. NO.	STATE	FED. AID PROJ. NO.	FISCAL YEAR	SHEET NO.	TOTAL SHEETS
HAWAII	HAW.	I-H3-1(66)	1992	71	440

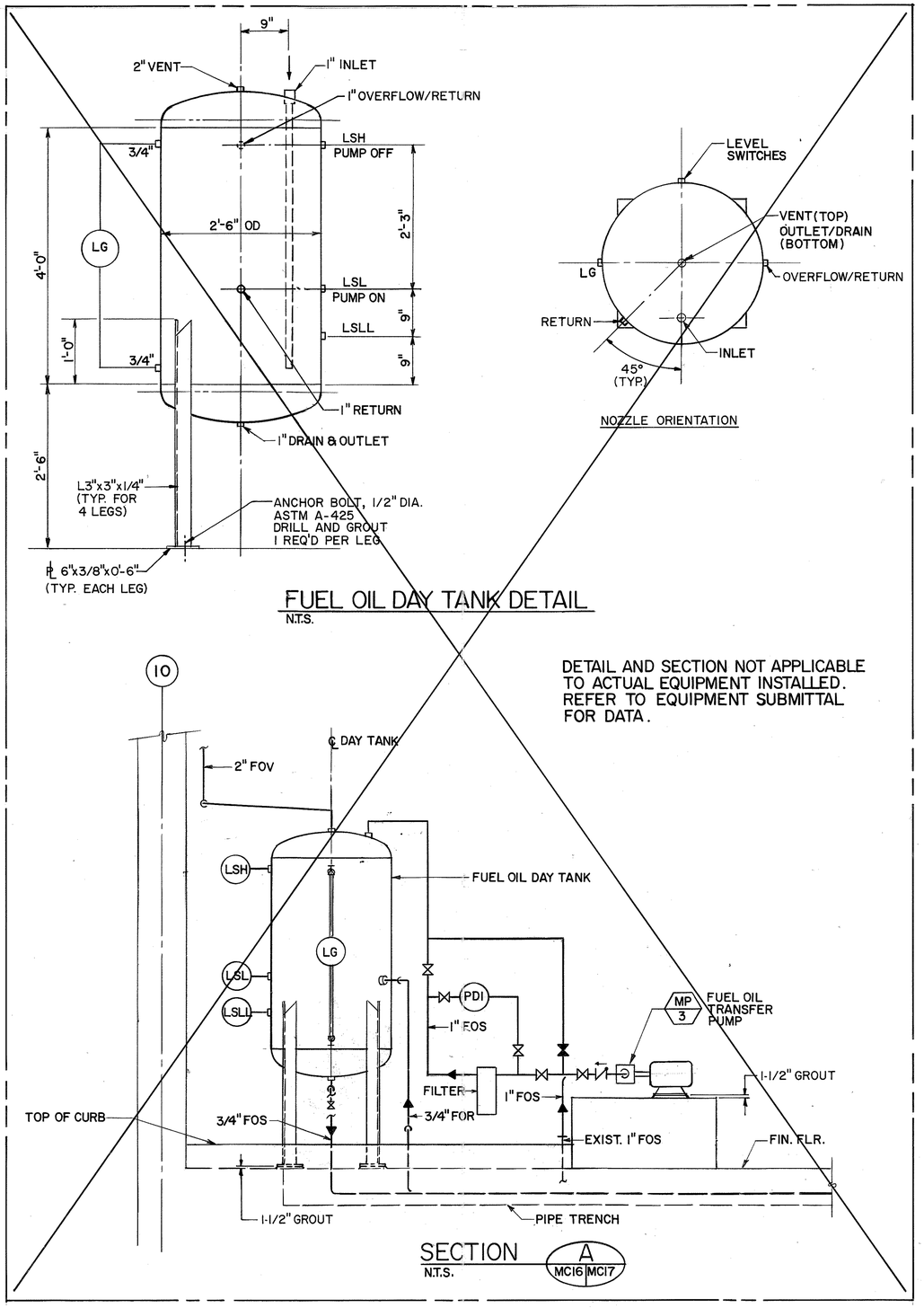

FUEL OIL DAY TANK DETAIL
N.T.S.

DETAIL AND SECTION NOT APPLICABLE TO ACTUAL EQUIPMENT INSTALLED. REFER TO EQUIPMENT SUBMITTAL FOR DATA.

SECTION A (MC16 | MC17)
N.T.S.

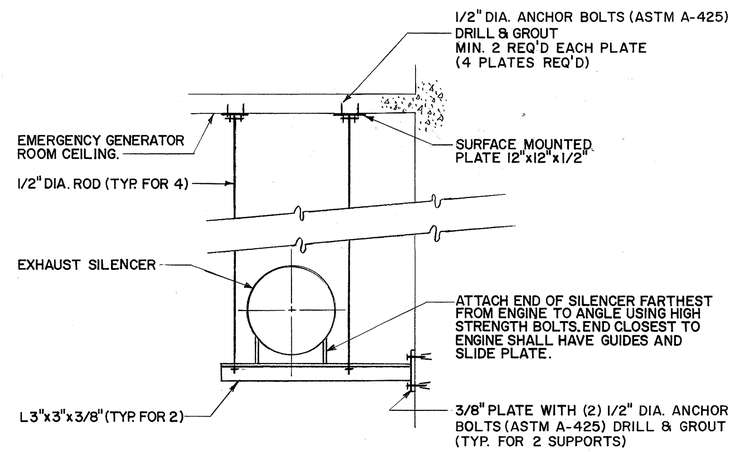

(SEE NOTE 1)
EXHAUST SILENCER SUPPORT DETAIL 2 (MC16 | MC17)
N.T.S.

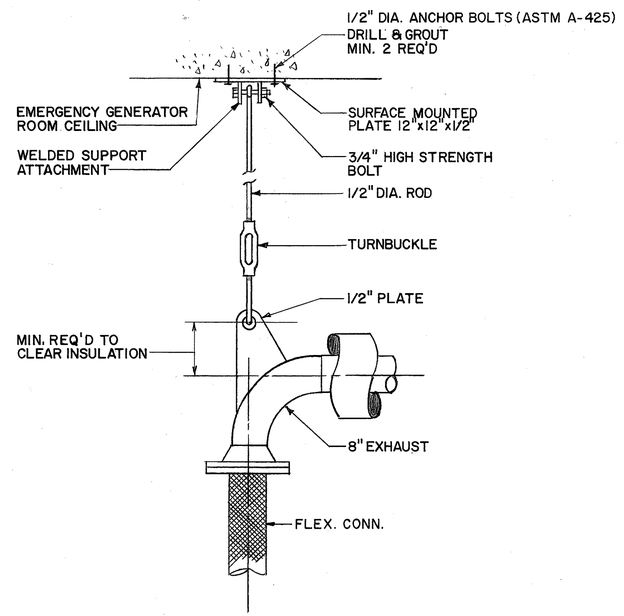

PIPE SUPPORT DETAIL 1 (MC16 | MC17)
N.T.S.

NOTES:

1. SIZE OF OUTSIDE AIR INTAKE LOUVER MAY PROHIBIT WALL ATTACHMENT AT ONE OR BOTH SUPPORT POINTS. IF THIS OCCURS, SUBSTITUTE L3"x3x3/8" FOR THE 1/2" DIA. ROD AND ANGLE BRACING AS REQUIRED.

SURVEY PLOTTED BY	DATE
DRAWN BY F.L. LALOUE	04/19/90
TRACED BY	
DESIGNED BY D.E. DRYDEN	12/20/89
QUANTITIES BY	
CHECKED BY J.N. QUE	06/01/90
ORIGINAL PLAN	
NOTE BOOK	
No.	

JOHN N. QUE
REGISTERED PROFESSIONAL ENGINEER
No. 6503-M
HAWAII, U.S.A.

THIS WORK WAS PREPARED BY ME OR UNDER MY SUPERVISION

DATE	REVISION

STATE OF HAWAII
DEPARTMENT OF TRANSPORTATION
HIGHWAYS DIVISION

EMERGENCY GENERATOR
SECTIONS & DETAILS
CONTROL BUILDING
INTERSTATE ROUTE H-3
F.A.I. PROJ. NO. I-H3-1(66)

SCALE: NONE DATE: APR 1992

SHEET NO. MC17 OF 19 SHEETS

FED. ROAD DIST. NO.	STATE	FED. AID PROJ. NO.	FISCAL YEAR	SHEET NO.	TOTAL SHEETS
HAWAII	HAW.	I-H3-1(66)	1992	72	440

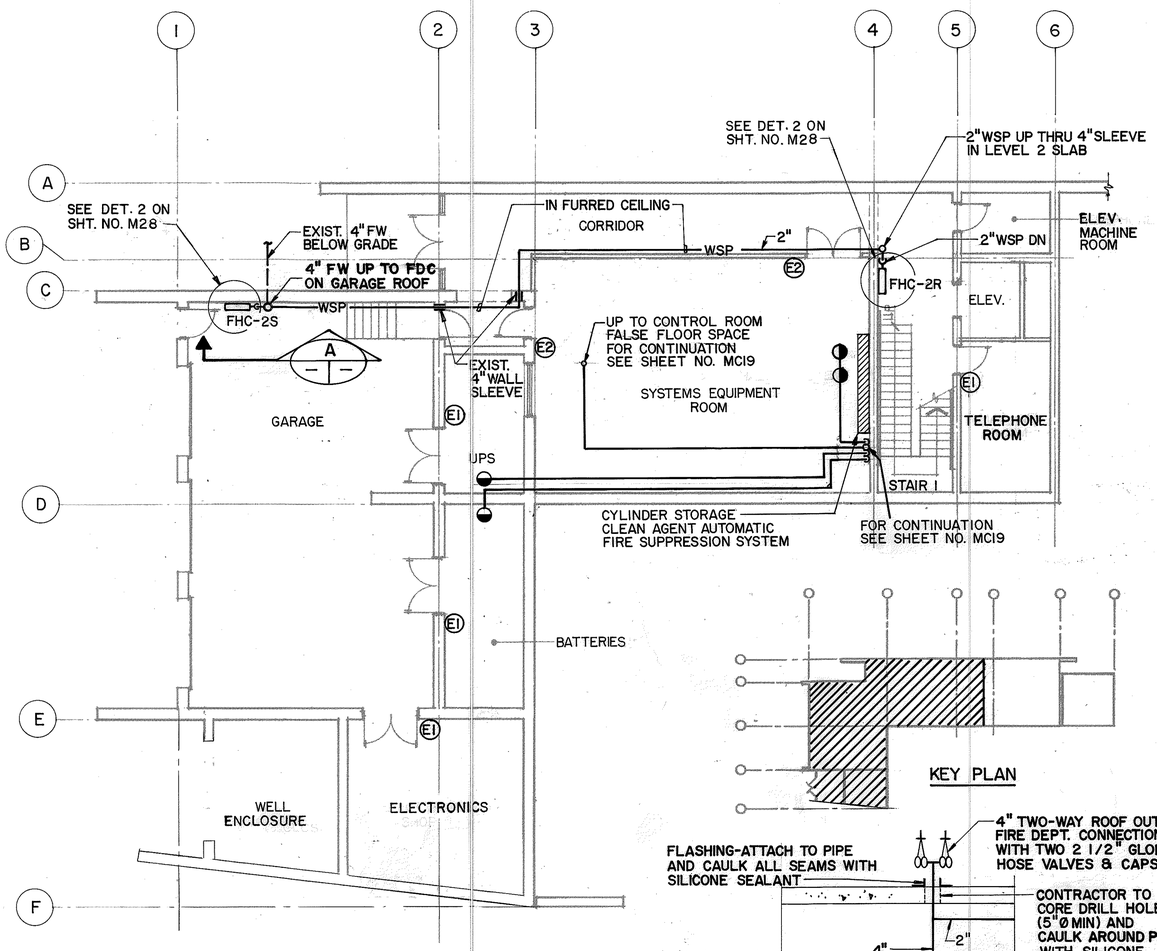

AGENT DISCHARGE NOZZLE

LEVEL 1 PLAN

SCALE: 1/8" = 1'-0"

KEY PLAN

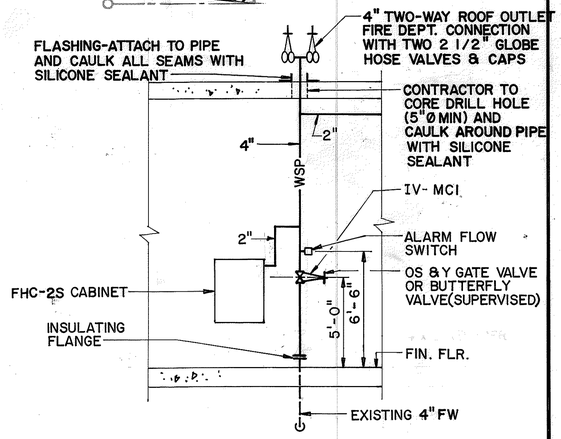

SECTION A

SCALE: 1/4" = 1'-0"

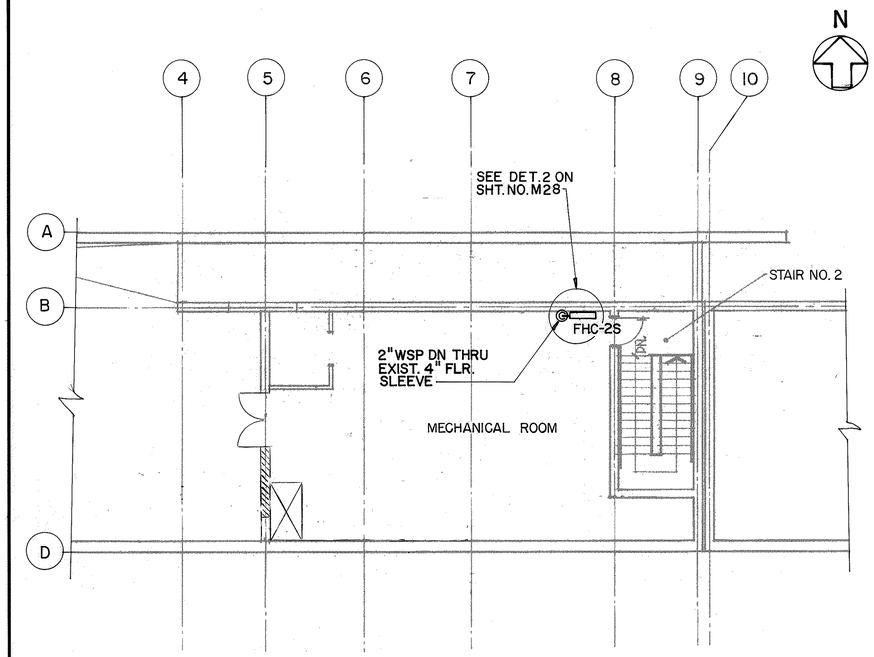

LEVEL 3 PARTIAL PLAN

SCALE: 1/8" = 1'-0"

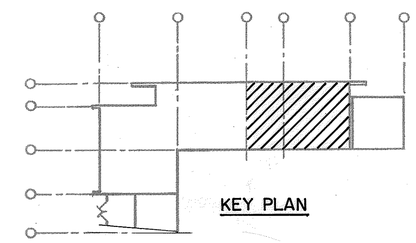

KEY PLAN

FOR DETAIL AS-BUILT INFORMATION REFER TO CONSTRUCTION SUBMITTALS

GRAPHIC SCALES

4' 0' 4' 8'
1/4" = 1'-0"
8' 0' 8' 16'
1/8" = 1'-0"

DATE	REVISION
6/21/94	REV. PER DCN 66-048
1/26/94	REV. PER DCN 66-034
6-15-93	ADDED FDC AT GARAGE ROOF PER DCN 66-011

REGISTERED PROFESSIONAL ENGINEER No. 6508-M HAWAII, U.S.A.

THIS WORK WAS PREPARED BY ME OR UNDER MY SUPERVISION

STATE OF HAWAII
DEPARTMENT OF TRANSPORTATION
HIGHWAYS DIVISION

FIRE PROTECTION-LEVEL 1 & LEVEL 3 PLANS

CONTROL BUILDING

INTERSTATE ROUTE H-3
F.A.I. PROJ. NO. I-H3-1(66)

SCALE: AS NOTED DATE: APR 1992

SHEET NO. MC18 OF 19 SHEETS

		DATE
ORIGINAL PLAN	SURVEY PLOTTED BY	
	DRAWN BY	R.F. BUNYI, JR. 01/6/90
	TRACED BY	
	DESIGNED BY	P.L. LALOUE 01/4/90
NOTE BOOK	QUANTITIES BY	
	CHECKED BY	J.N. QUE 06/01/90
No.		

FED. ROAD DIST. NO.	STATE	FED. AID PROJ. NO.	FISCAL YEAR	SHEET NO.	TOTAL SHEETS
HAWAII	HAW.	I-H3-1(66)	1992	73	440

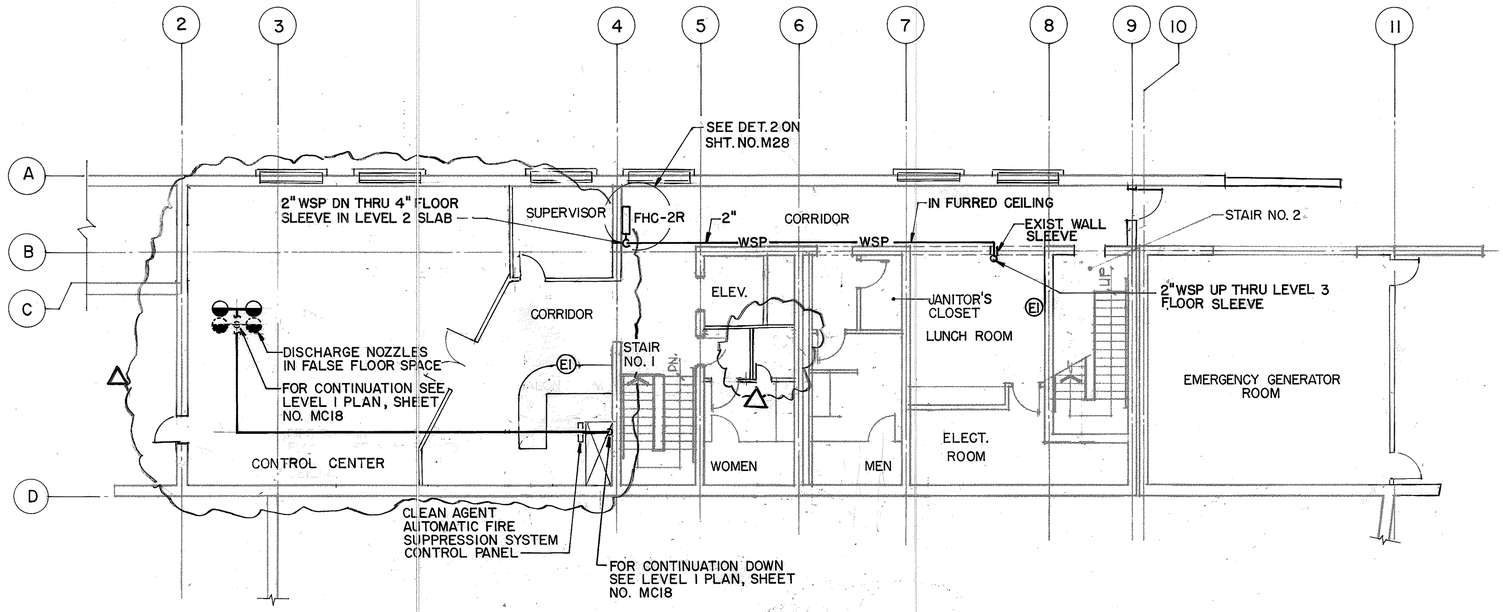

AGENT DISCHARGE NOZZLE

LEVEL 2 PLAN

SCALE: 1/8" = 1'-0"

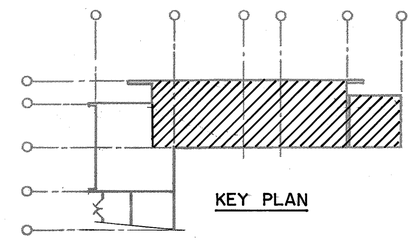

KEY PLAN

GRAPHIC SCALE

8' 0' 8' 16'

1/8" = 1'-0"

ORIGINAL PLAN		DATE
	SURVEY PLOTTED BY	
	DRAWN BY B.F. BUNYI, JR.	01/5/90
NOTE BOOK	TRACED BY	
	DESIGNED BY P.L.LALOUE	01/3/90
	QUANTITIES BY	
No.	CHECKED BY J.N. QUE	06/01/90

DATE	REVISION
12/9/94	REV. PER DCN 66-054A
6/21/94	REV. PER DCN 66-048
1/26/94	REV. PER DCN 66-034

JOHN M. QUE REGISTERED PROFESSIONAL ENGINEER No. 6503-M HAWAII, U.S.A.

THIS WORK WAS PREPARED BY ME OR UNDER MY SUPERVISION

STATE OF HAWAII
DEPARTMENT OF TRANSPORTATION
HIGHWAYS DIVISION

FIRE PROTECTION - LEVEL 2 PLAN

CONTROL BUILDING

INTERSTATE ROUTE H-3

F.A.I. PROJ. NO. I-H3-1(66)

SCALE: 1/8" = 1'-0" DATE: APR 1992

SHEET NO. MC19 OF 19 SHEETS

FED. ROAD DIST. NO.	STATE	FED. AID PROJ. NO.	FISCAL YEAR	SHEET NO.	TOTAL SHEETS
HAWAII	HAW.	I-H3-1(66)	1992	74	440

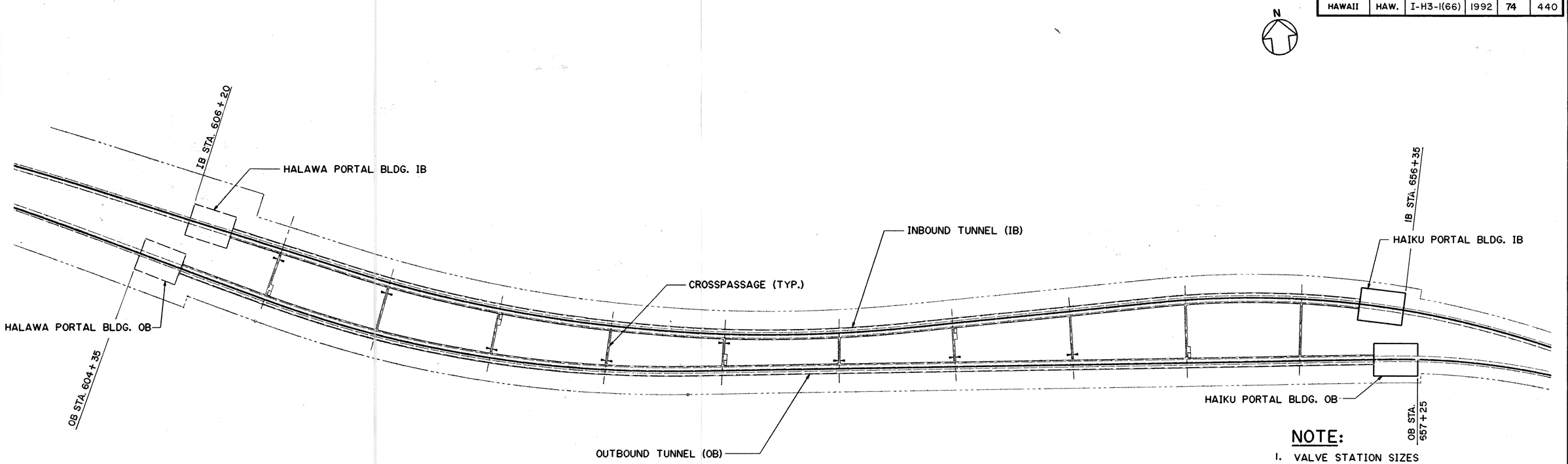

NOTE:

1. VALVE STATION SIZES
   A = 4'-9" X 3'-3" HIGH
   B = 3'-9" X 3'-3" HIGH
2. SEE DETAIL 1, SHT. NO. MT2 FOR VALVE STATION DETAIL.
3. SEE DETAIL 2, SHT. NO MT2 FOR VALVE BOX DETAIL
4. EACH VALVE STATION LOCATED AS SHOWN ON THIS PLAN REQUIRES THE INSTALLATION OF ONE FIRE EXTINGUISHER, HOSE AND RACK AS DETAILED ON SHEET NO. MT2.
5. THIS PLAN IS FOR REFERENCE ONLY AND SHOWS NUMBER AND LOCATION OF VALVE STATIONS WITHIN THE TUNNEL.

FOR DETAIL AS-BUILT INFORMATION REFER TO CONSTRUCTION SUBMITTALS

IB TUNNEL

VS NO.	VS LOCATION	VS SIZE	VB LOCATION	VB NO.
1	606+17	B	-	
2	607+20	B	-	
3	608+45	A	608+44.25	1
4	609+70	B	-	
5	610+95	B	-	
6	612+03.708	B	-	
7	613+30	A	613+29.25	2
8	614+55	B	-	
9	615+80	B	-	
10	616.88.708	B	-	
11	618+15	A	618+14.25	3
12	619+40	B	-	
13	620+65	B	-	
14	621+73.708	B	-	
15	623+00	A	622+99.25	4
16	624+25	B	-	
17	625+50	B	-	
18	626+58.708	B	-	
19	627+85	A	627+84.25	5
20	629+10	B	-	
21	630+35	B	-	
22	631+48.708	B	-	
23	632+75	A	632+74.25	6
24	634+00	B	-	
25	635+25	B	-	

IB TUNNEL

VS NO.	VS LOCATION	VS SIZE	VB LOCATION	VB NO.
26	636+38.708	B	-	
27	637+65	A	637+64.25	7
28	638+90	B	-	
29	640+15	B	-	
30	641+38.708	B	-	
31	642+65	A	642+64.25	8
32	643+90	B	-	
33	645+15	B	-	
34	646+38.708	B	-	
35	647+65	A	647+64.25	9
36	648+90	B	-	
37	650+15	B	-	
38	651+38.708	B	-	
39	652+65	A	652+64.25	10
40	653+90	B	-	
41	655+13	B	-	

OB TUNNEL

VS NO.	VS LOCATION	VS SIZE	VB LOCATION	VB NO.
1	604+32	B	-	
2	605+60	B	-	
3	606+85	B	-	
4	608+10	A	608+09.25	1
5	609+35	B	-	
6	610+60	B	-	
7	611+83.708	B	-	
8	613+10	A	613+09.25	2
9	614+35	B	-	
10	615+60	B	-	
11	616+83.708	B	-	
12	618+10	A	618+09.25	3
13	619+35	B	-	
14	620+60	B	-	
15	621+83.708	B	-	
16	623+10	A	623+09.25	4
17	624+35	B	-	
18	625+60	B	-	
19	626+83.708	B	-	
20	628+10	A	628+09.25	5
21	629+35	B	-	
22	630+60	B	-	
23	631+83.708	B	-	
24	633+10	A	633+09.25	6
25	634+35	B	-	

OB TUNNEL

VS NO.	VS LOCATION	VS SIZE	VB LOCATION	VB NO.
26	635+60	B	-	
27	636+83.708	B	-	
28	638+10	A	638+09.25	7
29	639+35	B	-	
30	640+60	B	-	
31	641+83.708	B	-	
32	643+10	A	643+09.25	8
33	644+35	B	-	
34	645+60	B	-	
35	646+73.708	B	-	
36	648+00	A	647+99.25	9
37	649+25	B	-	
38	650+50	B	-	
39	651+58.708	B	-	
40	652+85	A	652+84.25	10
41	654+10	B	-	
42	655+35	B	-	
43	656+03	B	-	

DATE	REVISION

JOHN N. QUE
REGISTERED PROFESSIONAL ENGINEER
No. 6503-M
HAWAII, U.S.A.

THIS WORK WAS PREPARED BY ME OR UNDER MY SUPERVISION

STATE OF HAWAII
DEPARTMENT OF TRANSPORTATION
HIGHWAYS DIVISION

VALVE STATION LOCATION PLAN

TUNNELS

INTERSTATE ROUTE H-3

F.A.I. PROJ. NO. I-H3-1(66)

SCALE: NONE DATE: APR 1992

SHEET NO. MT1 OF 3 SHEETS

ORIGINAL PLAN			
	SURVEY PLOTTED BY		DATE
	DRAWN BY	B.F.BUNYI, JR.	" 4/19/89
NOTE BOOK	TRACED BY		" 4/17/89
	DESIGNED BY	P.L.LALOUE	
	QUANTITIES BY		
NO.	CHECKED BY	J. N. QUE	" 6/8/90

2410V161 2410: V161 MS0052.FGB>1 100CT89-11.51.40

FED. ROAD DIST. NO.	STATE	FED. AID PROJ. NO.	FISCAL YEAR	SHEET NO.	TOTAL SHEETS
HAWAII	HAW.	I-H3-1(66)	1992	75	440

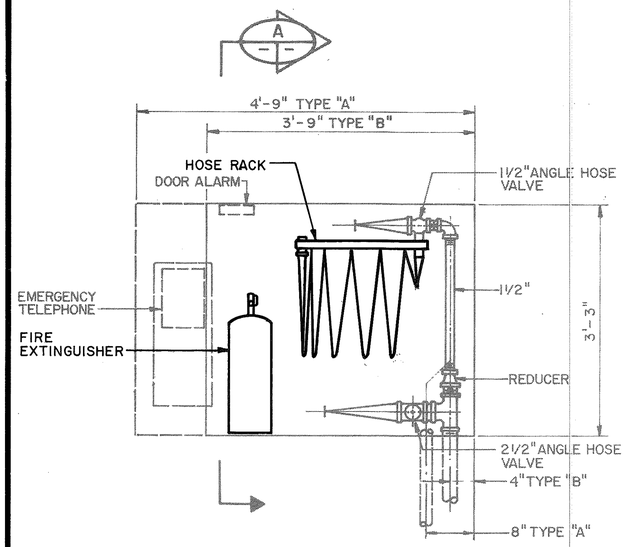

FRONT VIEW

VALVE STATION DETAIL 1 (MT1 | MT3)

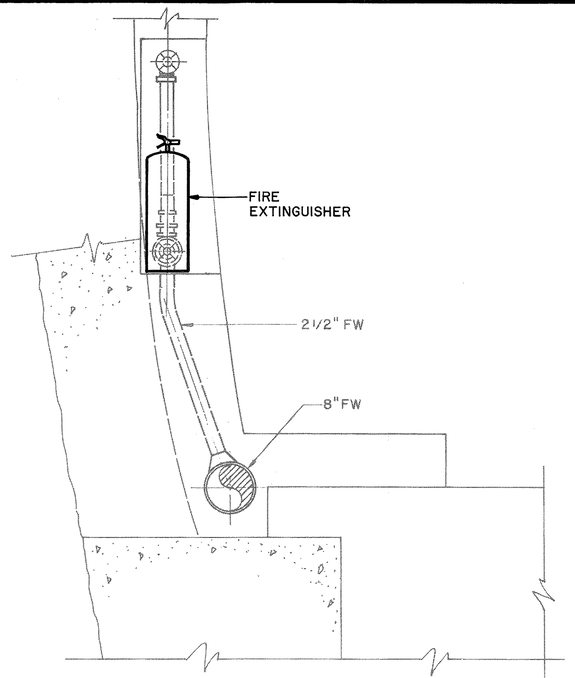

SECTION A

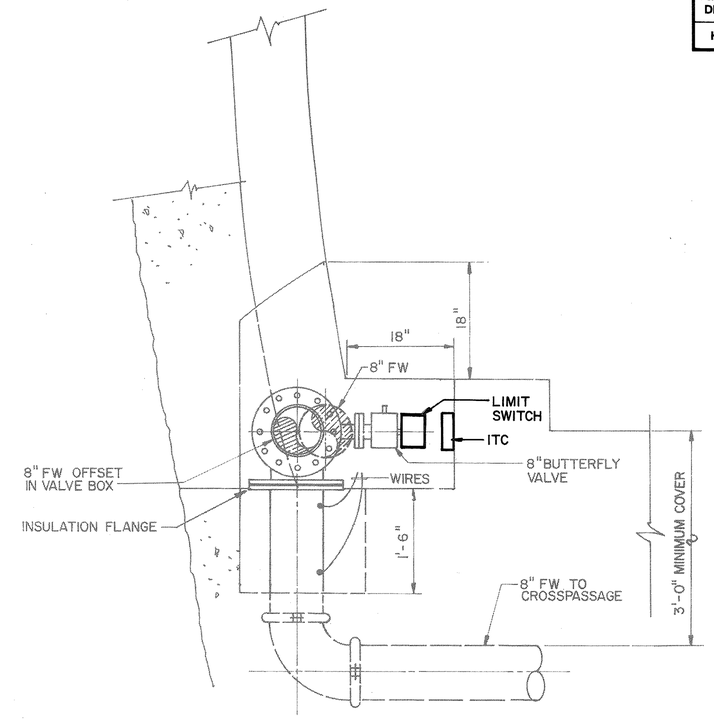

SECTION B

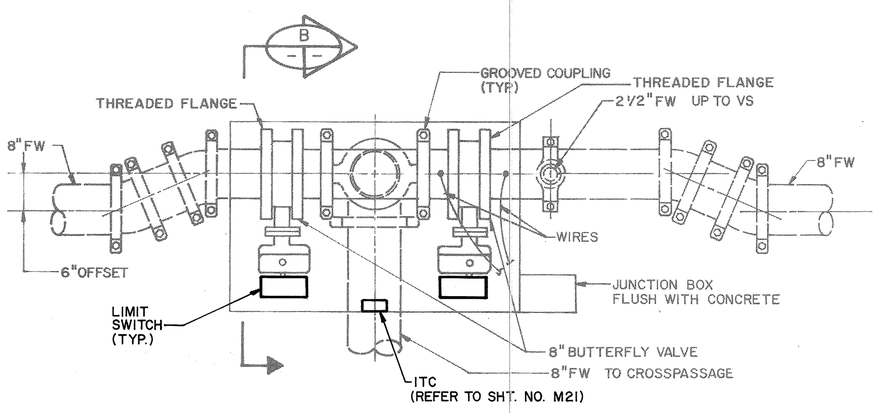

VALVE BOX DETAIL 2 (MT1 | MT3)

ORIGINAL PLAN		
SURVEY PLOTTED BY		DATE 5/11/89
DRAWN BY	B.F. BURYL, JR.	
TRACED BY		
NOTE BOOK	DESIGNED BY	P.L. LALOUE 5/8/89
	QUANTITIES BY	
No.	CHECKED BY	J.N. QUE 9/7/90

JOHN N. QUE
REGISTERED PROFESSIONAL ENGINEER
No. 6503-M
HAWAII, U.S.A.

THIS WORK WAS PREPARED BY ME OR UNDER MY SUPERVISION

John N. Que

DATE	REVISION

STATE OF HAWAII
DEPARTMENT OF TRANSPORTATION
HIGHWAYS DIVISION

FIRE PROTECTION - SECTIONS AND DETAILS

HALAWA TUNNELS

INTERSTATE ROUTE H-3
F.A.I. PROJ. NO. I-H3-1(66)

SCALE: NONE DATE: APR 1992

SHEET NO. MT2 OF 3 SHEETS

FED. ROAD DIST. NO.	STATE	FED. AID PROJ.NO.	FISCAL YEAR	SHEET NO.	TOTAL SHEETS
HAWAII	HAW.	I-H3-1(66)	1992	76	440

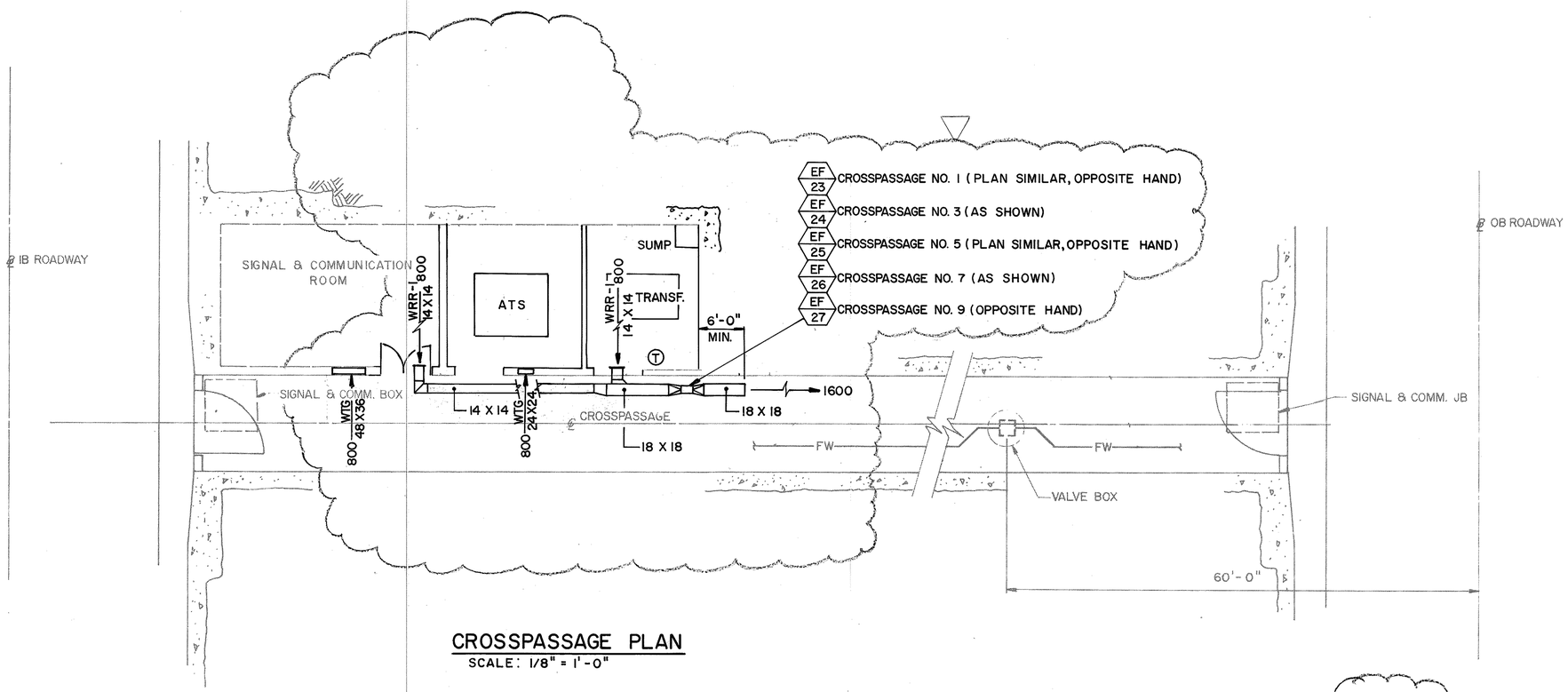

CROSSPASSAGE PLAN

SCALE: 1/8" = 1'-0"

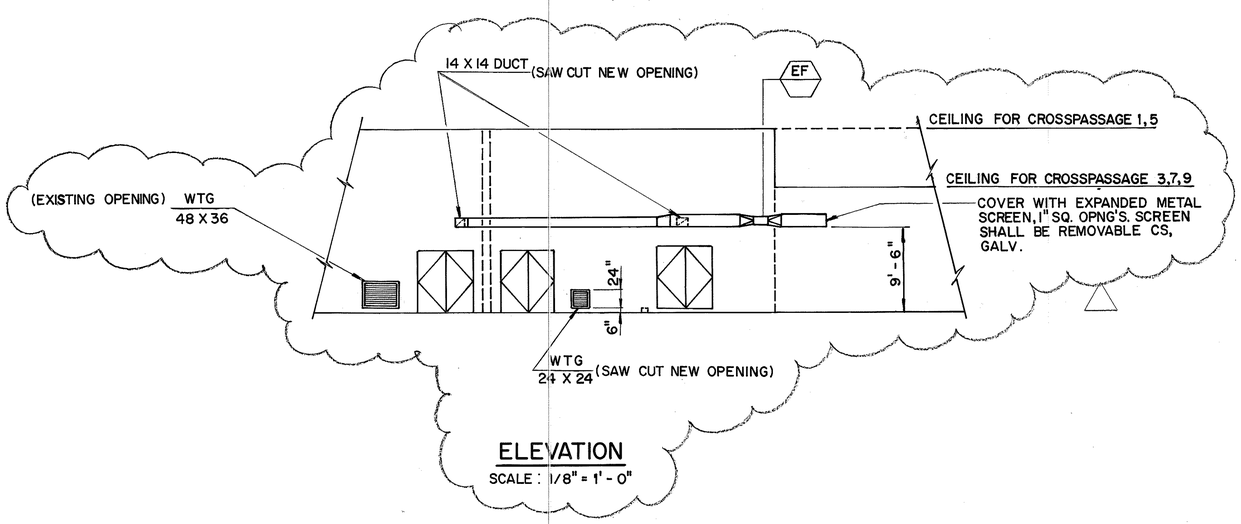

ELEVATION

SCALE: 1/8" = 1'-0"

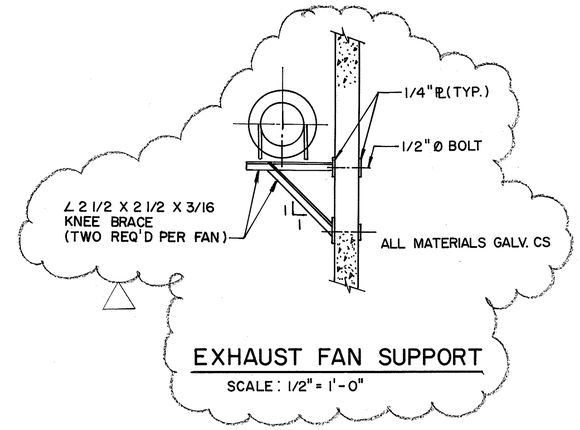

EXHAUST FAN SUPPORT

SCALE: 1/2" = 1'-0"

GRAPHIC SCALES:

1'0 5' 10' 15' 20' 30'

1/8"=1'-0"

3/4/94	REVISED PER DCN 66-037
DATE	REVISION

STATE OF HAWAII
DEPARTMENT OF TRANSPORTATION
HIGHWAYS DIVISION

HVAC

CROSSPASSAGE PLAN

TUNNELS

INTERSTATE ROUTE H-3
F.A.I. PROJ. NO. I-H3-1(66)

SCALE: AS NOTED DATE:

SHEET MT3 OF 3 SHEETS

JOHN N. QUE
REGISTERED PROFESSIONAL ENGINEER
No. 8503-M
HAWAII, U.S.A.

THIS WORK WAS PREPARED BY ME OR UNDER MY SUPERVISION

ORIGINAL PLAN	SURVEYS PLOTTED BY	DATE 5/8/93
	DRAWN BY B.F. BUNYI	5/3/89
NOTE BOOK	TRACED BY P.L. LALOUE	5/3/89
	DESIGNED BY	
	QUANTITIES BY	
No.	CHECKED BY A.M. PORTIER	5/3/89

FED. ROAD DIST. NO.	STATE	FED. AID PROJ. NO.	FISCAL YEAR	SHEET NO.	TOTAL SHEETS
HAWAII	HAW.	I-H3-1(66)	1992	77	440

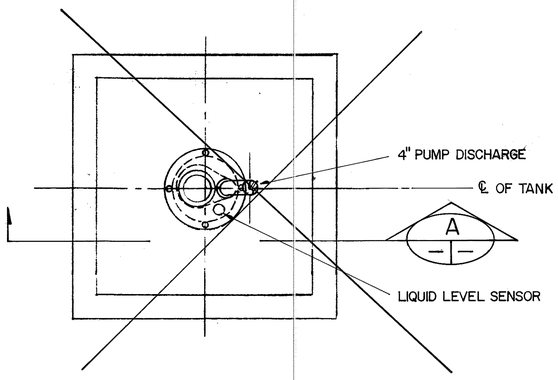

PLAN
SCALE: 3/4"=1'-0"

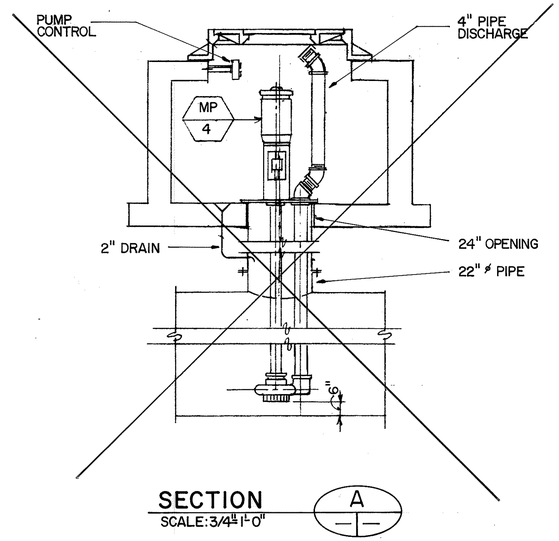

SECTION A
SCALE: 3/4"=1'-0"

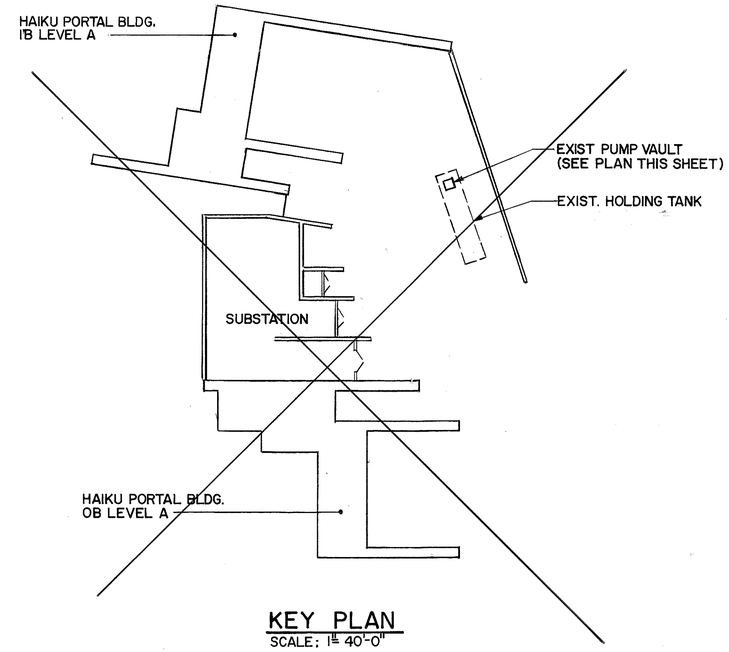

KEY PLAN
SCALE: 1"=40'-0"

DRAINAGE TRANSFER PUMP
NOT INSTALLED

FOR DETAIL AS-BUILT INFORMATION
REFER TO CONSTRUCTION SUBMITTALS

GRAPHIC SCALES

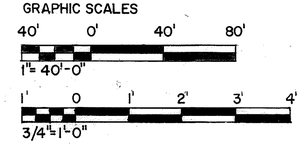

JOHN N. QUE
REGISTERED PROFESSIONAL ENGINEER
No. 6503-M
HAWAII, U.S.A.

THIS WORK WAS PREPARED BY ME OR UNDER MY SUPERVISION

DATE	REVISION

STATE OF HAWAII
DEPARTMENT OF TRANSPORTATION
HIGHWAYS DIVISION

PLUMBING - DRAINAGE
TRANSFER PUMP PLAN & SECTION

HAIKU APPROACH
INTERSTATE ROUTE H-3
F.A.I. PROJ. NO. I-H3-1(66)

SCALE: AS NOTED DATE: APR 1992

SHEET NO. MB1 OF 2 SHEETS

ORIGINAL PLAN	SURVEY PLOTTED BY	DATE
	DRAWN BY P. L. LALOUE	12/07/89
	TRACED BY	
NOTE BOOK	DESIGNED BY P. L. LALOUE	11/14/89
	QUANTITIES BY	
No.	CHECKED BY J. N. QUE	06/04/90

FED. ROAD DIST. NO.	STATE	FED. AID PROJ. NO.	FISCAL YEAR	SHEET NO.	TOTAL SHEETS
HAWAII	HAW.	I-H3-1(66)	1992	78	440

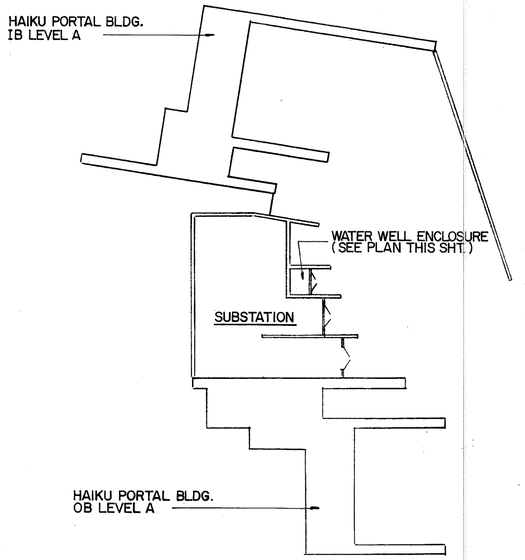

KEY PLAN
SCALE: 1" = 40'-0"

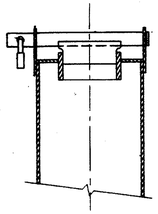

DETAIL 1
N.T.S.

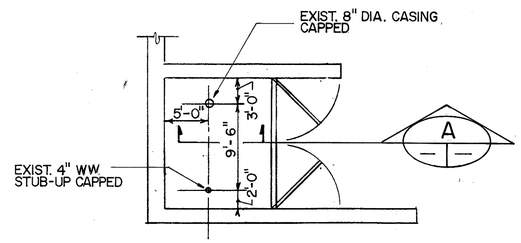

EXIST. WATER WELL ENCLOSURE PLAN
SCALE: 1/8" = 1'-0"

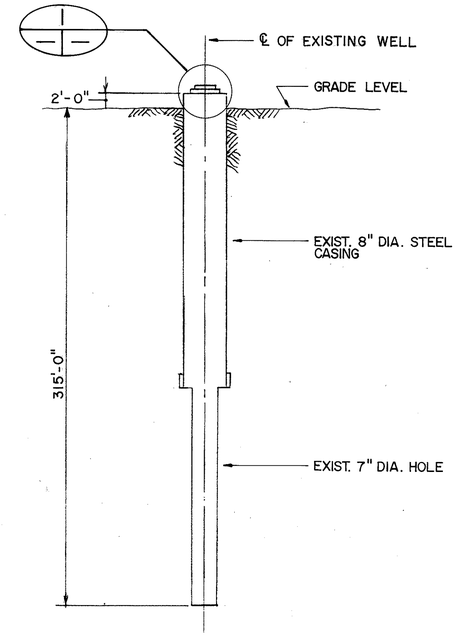

SECTION A
N.T.S.

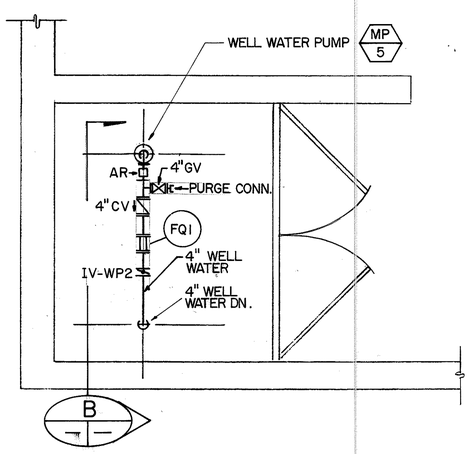

WELL WATER PUMP & PIPING PLAN
SCALE: 1/4" = 1'-0"

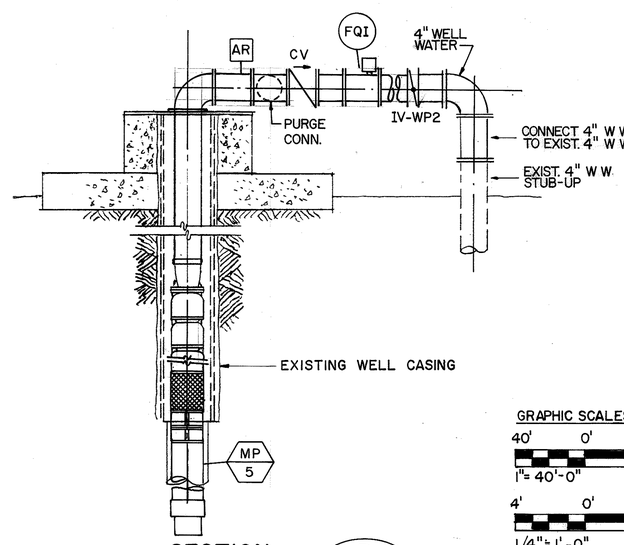

SECTION B
N.T.S.

GRAPHIC SCALES

40' 0' 40' 80'
1" = 40'-0"

4' 0' 4' 8'
1/4" = 1'-0"

8' 0' 8' 16'
1/8" = 1'-0"

ORIGINAL PLAN	SURVEY PLOTTED BY	DATE
	DRAWN BY P. L. LALOUE	1/10/90
	TRACED BY	
NOTE BOOK	DESIGNED BY P. L. LALOUE	1/08/90
	QUANTITIES BY	
No.	CHECKED BY J. N. QUE	6/11/90

JOHN N. QUE
REGISTERED PROFESSIONAL ENGINEER
No. 6503-M
HAWAII, U.S.A.

THIS WORK WAS PREPARED BY ME OR UNDER MY SUPERVISION

DATE	REVISION

STATE OF HAWAII
DEPARTMENT OF TRANSPORTATION
HIGHWAYS DIVISION

PLUMBING - WELL WATER PUMP
PLAN & SECTION
HAIKU APPROACH
INTERSTATE ROUTE H-3
F.A.I. PROJ. NO. I-H3-1(66)

SCALE: AS NOTED DATE: APR 1992

SHEET NO. MB2 OF 2 SHEETS

FED. ROAD DIST. NO.	STATE	FED. AID PROJ. NO.	FISCAL YEAR	SHEET NO.	TOTAL SHEETS
HAWAII	HAW.	I-H3-1(66)	1992	79	440

N

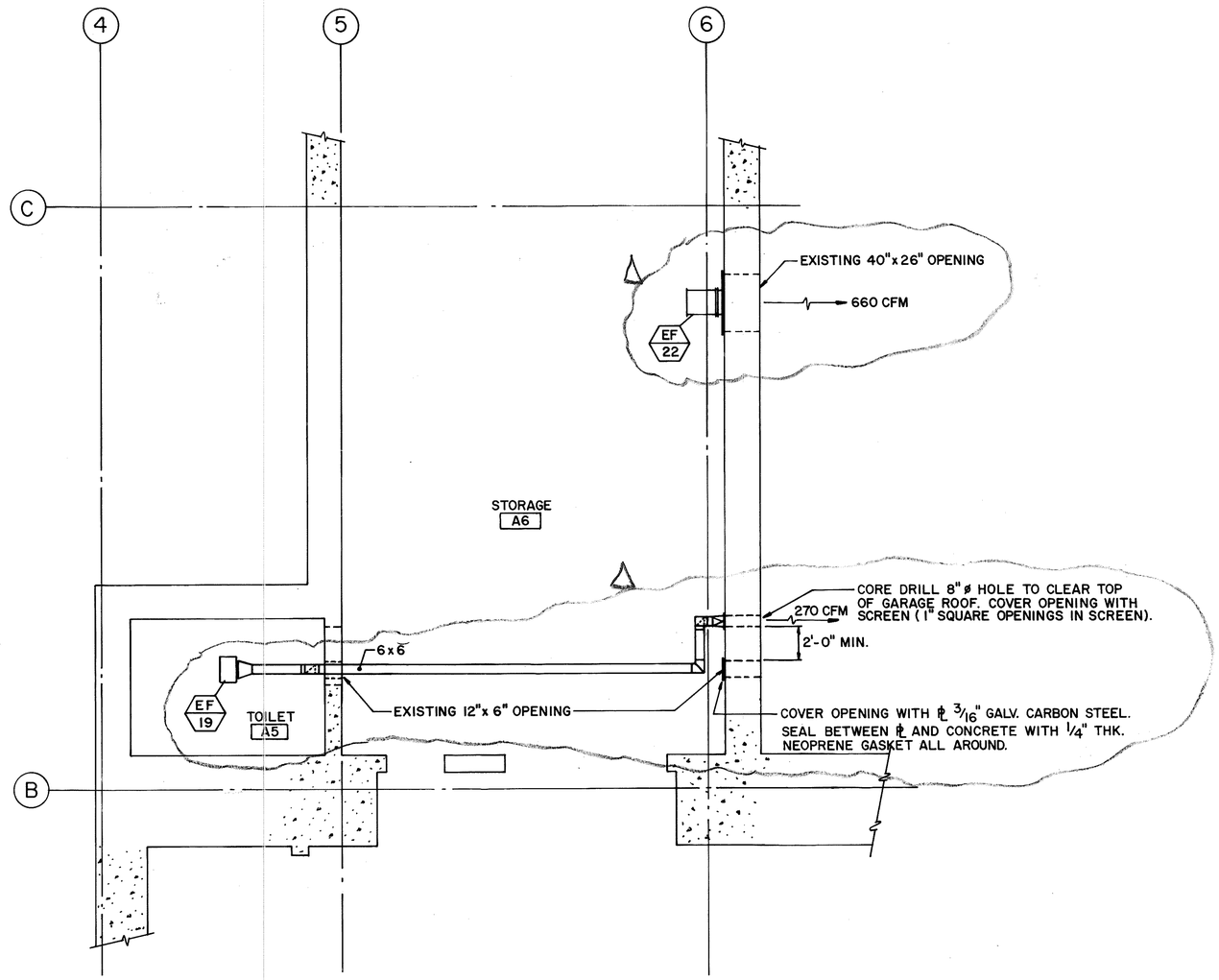

LEVEL A PARTIAL PLAN

FOR DETAIL AS-BUILT INFORMATION REFER TO CONSTRUCTION SUBMITTALS

5/11/94	ADDED EF-19 AND RELOCATED EF-22 PER DCN 66-042

STATE OF HAWAII
DEPARTMENT OF TRANSPORTATION
HIGHWAYS DIVISION

HVAC – LEVEL A
PARTIAL PLAN
HAIKU PORTAL BUILDING - 1B
INTERSTATE ROUTE H-3
F.A.I. PROJ. NO. I-H3-1(66)

SCALE: 1/4"=1'-0" DATE: APR 1992

SHEET NO. MM1 OF 7 SHEETS

GRAPHIC SCALE
1' 0 1' 2' 3' 4' 5'
1/4"=1'-0"

JOHN M. GOO
REGISTERED PROFESSIONAL ENGINEER
No. 6503-M
HAWAII, U.S.A.

THIS WORK WAS PREPARED BY ME OR UNDER MY SUPERVISION

ORIGINAL PLAN		
NOTE BOOK	SURVEY PLOTTED BY B. BUNYI	DATE 3/22/89
	DRAWN BY "	"
	TRACED BY "	"
	DESIGNED BY A. H. PORTIER	3/14/89
	QUANTITIES BY "	"
No.	CHECKED BY J. N. QUE	5/12/90

FED. ROAD DIST. NO.	STATE	FED. AID PROJ. NO.	FISCAL YEAR	SHEET NO.	TOTAL SHEETS
HAWAII	HAW.	I-H3-1(66)	1992	80	440

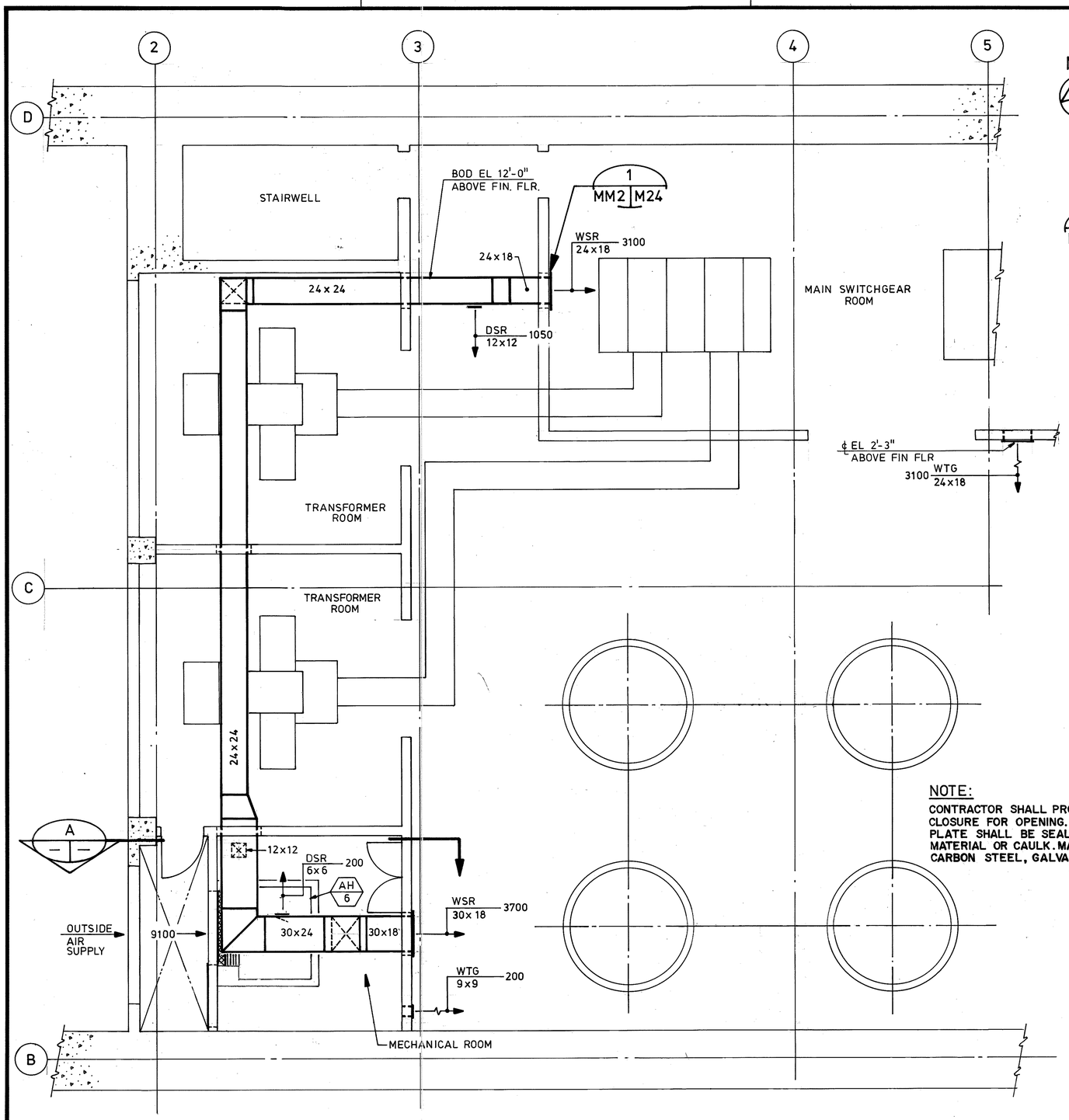

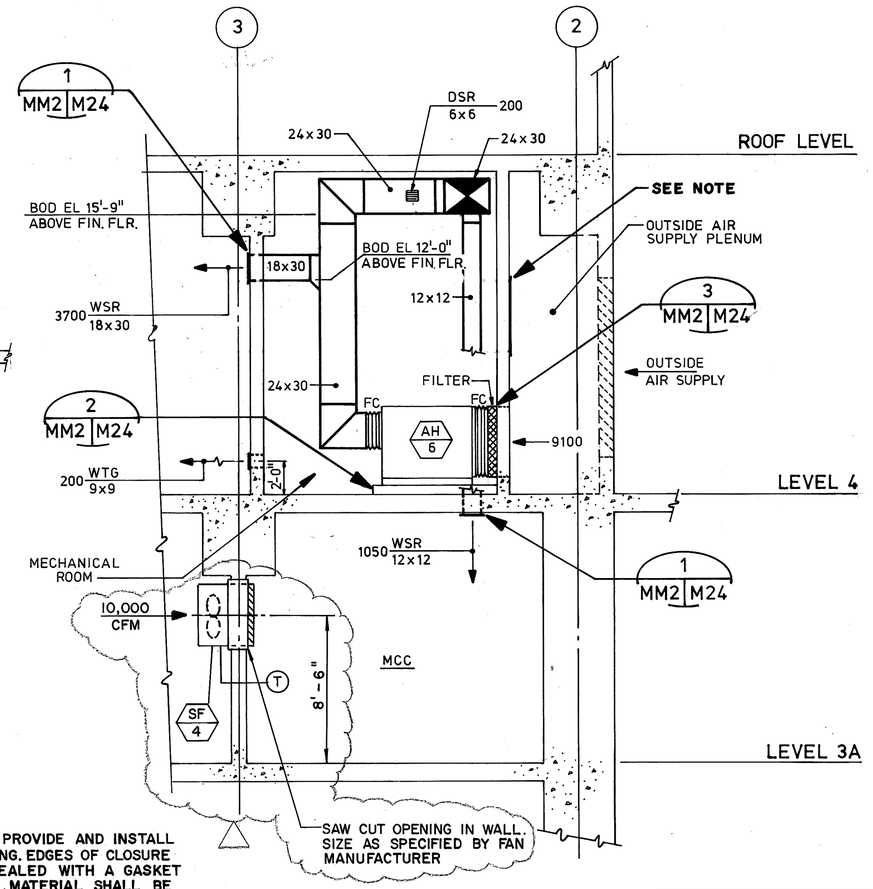

NOTE:
CONTRACTOR SHALL PROVIDE AND INSTALL CLOSURE FOR OPENING. EDGES OF CLOSURE PLATE SHALL BE SEALED WITH A GASKET MATERIAL OR CAULK. MATERIAL SHALL BE CARBON STEEL, GALVANIZED.

SECTION A

3/8/94	REV. SECT. 'A', ADDED SF PER
	DCN 66-039
5/13/93	DELETED AUX. COOLING FANS & ASSOC.
	DUCTWORK PER DCN 66-004
DATE	REVISION

STATE OF HAWAII
DEPARTMENT OF TRANSPORTATION
HIGHWAYS DIVISION

HVAC — LEVEL 4
PARTIAL PLAN & SECTION

HAIKU PORTAL BUILDING — IB
INTERSTATE ROUTE H-3
F.A.I. PROJ. NO. I-H3-1(66)

SCALE: 1/4" = 1'-0" DATE: APR 1992

SHEET NO. MM2 OF 7 SHEETS

GRAPHIC SCALE
1' 0 1' 2' 3' 4' 5' 10'
1/4" = 1'-0"

JOHN N. QUE
REGISTERED PROFESSIONAL ENGINEER
No. 6503-M
HAWAII, U.S.A.

THIS WORK WAS PREPARED BY ME OR UNDER MY SUPERVISION

		DATE
ORIGINAL PLAN	SURVEY PLOTTED BY	
	DRAWN BY D. E. DRYDEN	9/21/89
	TRACED BY	
NOTE BOOK	DESIGNED BY D. E. DRYDEN	9/15/89
	QUANTITIES BY	
No.	CHECKED BY J. N. QUE	6/05/90

FED. ROAD DIST. NO.	STATE	FED. AID PROJ. NO.	FISCAL YEAR	SHEET NO.	TOTAL SHEETS
HAWAII	HAW.	I-H3-1(66)	1992	81	440

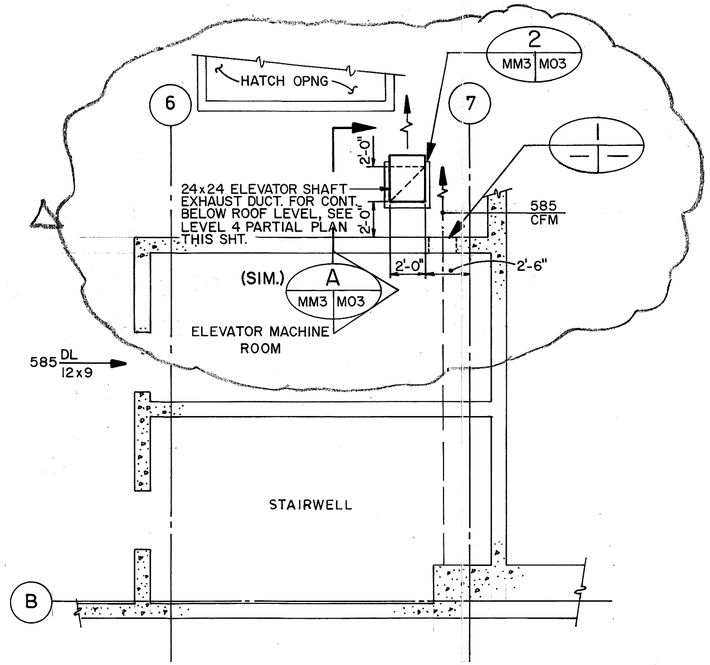

ROOF LEVEL PARTIAL PLAN
SCALE: 1/4"=1'-0"

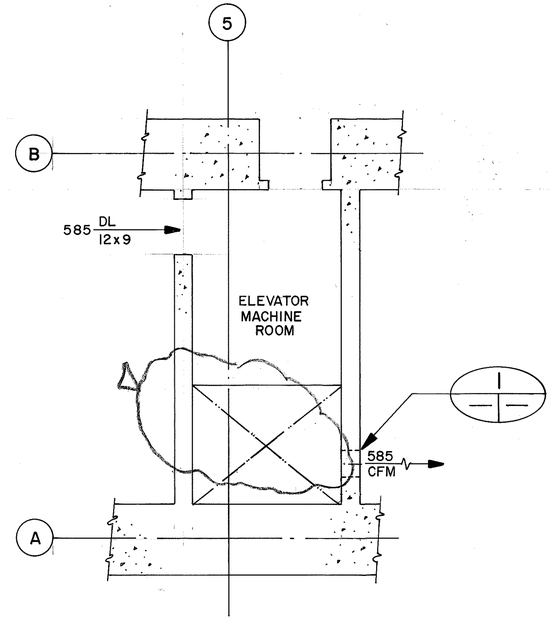

LEVEL 3 PARTIAL PLAN
SCALE: 1/4"=1'-0"

NOTE
FOR SAWCUT OPENINGS — BUSH HAMMER EXPOSED EDGES TO EVEN SURFACE, GRIND SMOOTH. PAINT EDGES OF OPENINGS AND EXPOSED REBAR WITH EPOXY PAINT.

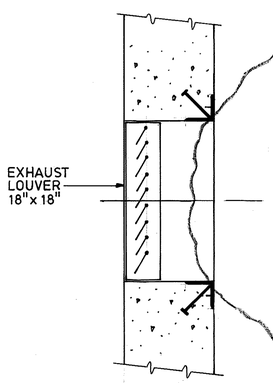

DETAIL 1
NO SCALE

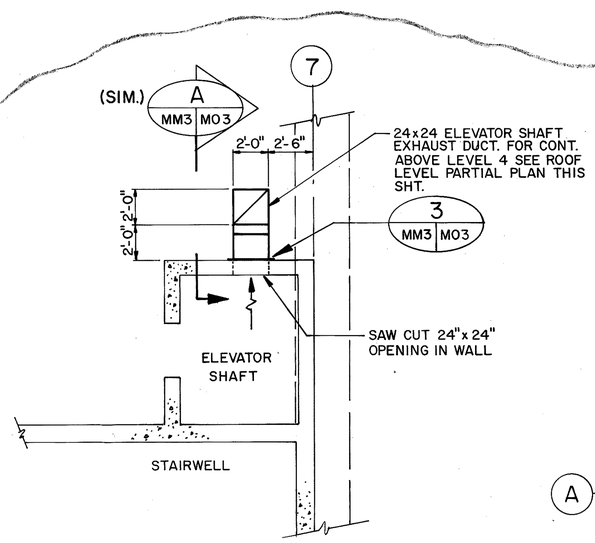

LEVEL 4 PARTIAL PLAN
SCALE: 1/4"=1'-0"

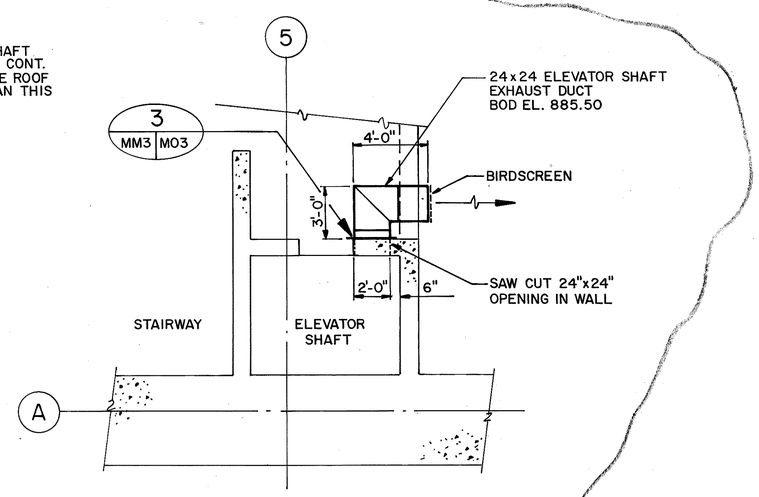

LEVEL 2 PARTIAL PLAN
SCALE: 1/4"=1'-0"

GRAPHIC SCALE
1' 0 1' 2' 3' 4' 5' 10'
1/4"=1'-0"

JOHN N. QUE
REGISTERED PROFESSIONAL ENGINEER
No. 6503-M
HAWAII, U.S.A.

THIS WORK WAS PREPARED BY ME OR UNDER MY SUPERVISION

9/15/94	REV. PER DCN 66-052
DATE	REVISION

STATE OF HAWAII
DEPARTMENT OF TRANSPORTATION
HIGHWAYS DIVISION

HVAC-ELEVATOR EQUIPMENT ROOMS-PLANS & DETAILS

HAIKU PORTAL BUILDING - 1B
INTERSTATE ROUTE H-3
F.A.I. PROJ. NO. I-H3-1(66)

SCALE: AS NOTED DATE: APR 1992

SHEET NO. MM3 OF 7 SHEETS

ORIGINAL PLAN		DATE
	SURVEY PLOTTED BY	
	DRAWN BY D. E. DRYDEN	11/20/93
NOTE BOOK	PLOTTED BY	
	DESIGNED BY D. E. DRYDEN	11/14/93
No.	QUANTITIES BY	
	CHECKED BY J. N. QUE	06/05/90

FED. ROAD DIST. NO.	STATE	FED. AID PROJ. NO.	FISCAL YEAR	SHEET NO.	TOTAL SHEETS
HAWAII	HAW.	I-H3-1(66)	1992	82	440

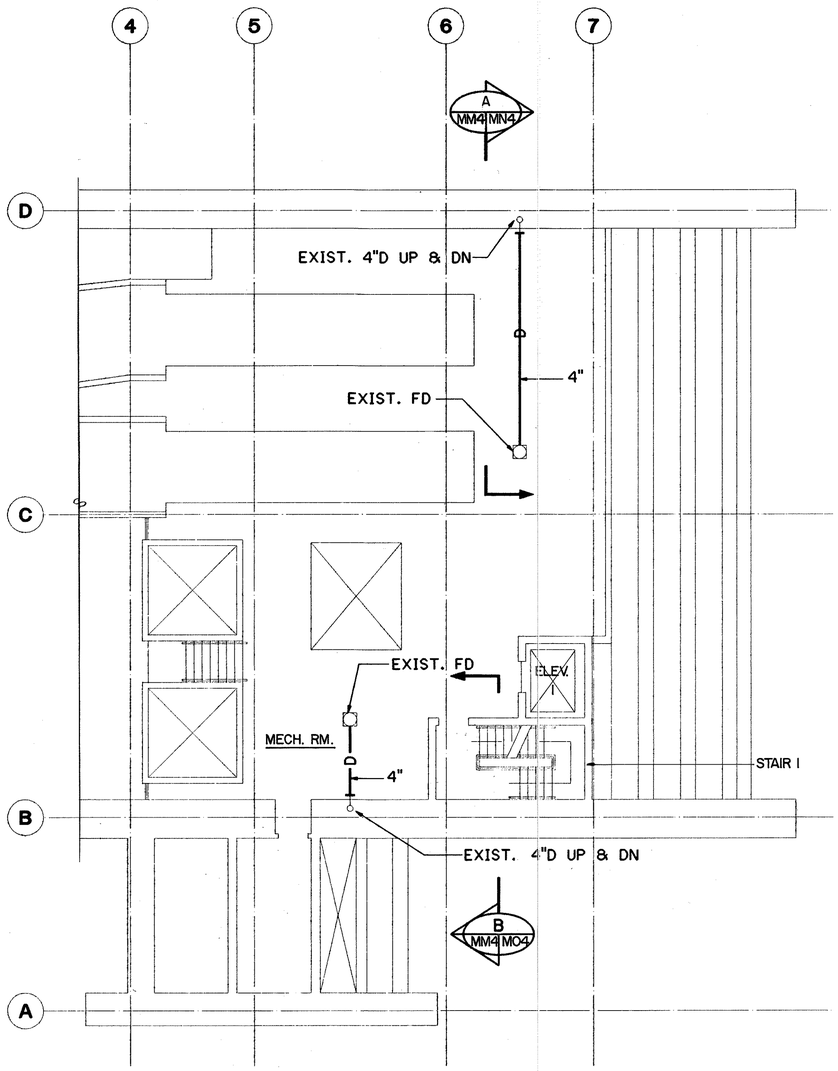

LEVEL 3 PARTIAL PLAN

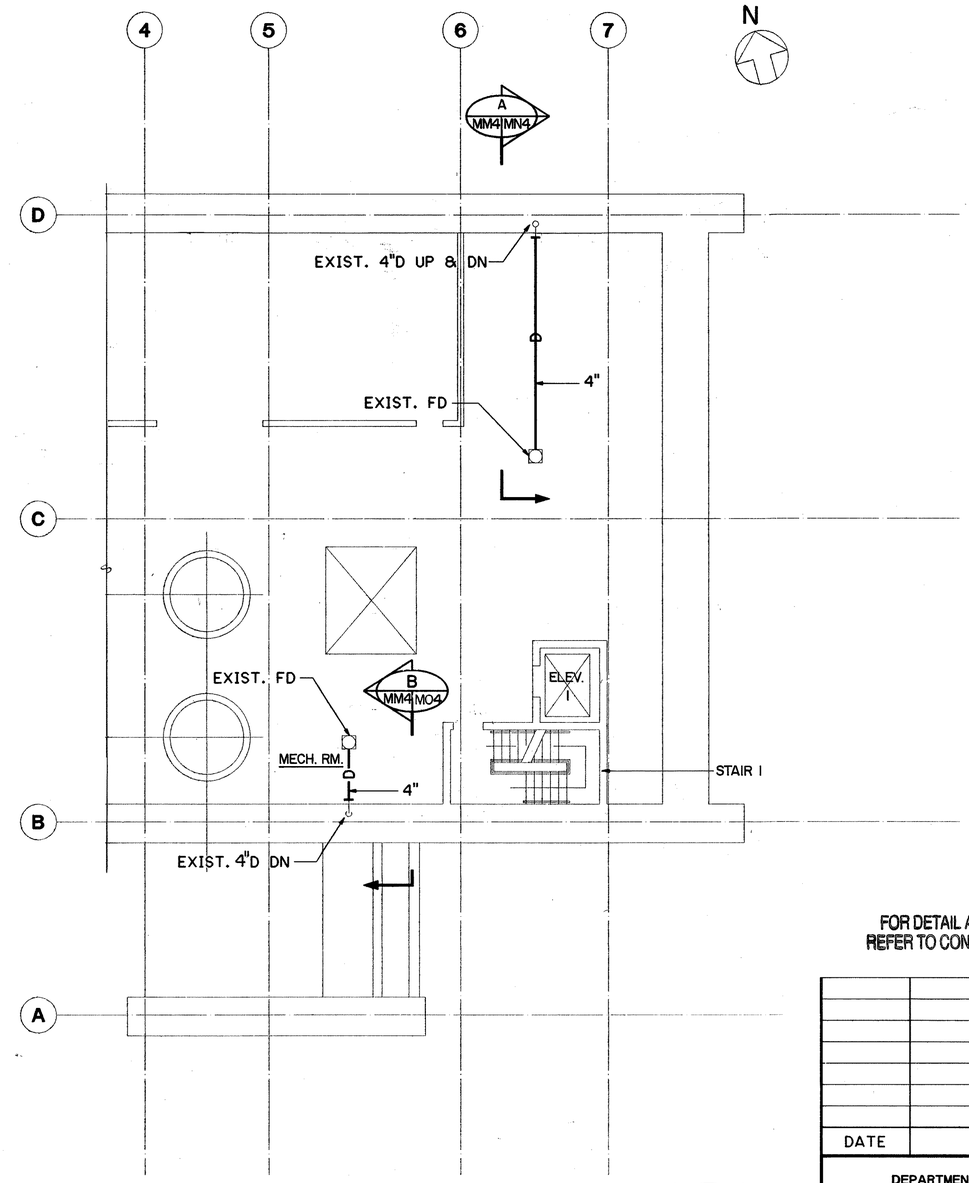

LEVEL 4 PARTIAL PLAN

GRAPHIC SCALE
8' 0 8' 16'
1/8"=1'-0"

JOHN N. GUE
REGISTERED PROFESSIONAL ENGINEER
No. 6503-M
HAWAII, U.S.A.

THIS WORK WAS PREPARED BY ME OR UNDER MY SUPERVISION

FOR DETAIL AS-BUILT INFORMATION REFER TO CONSTRUCTION SUBMITTALS

DATE	REVISION

STATE OF HAWAII
DEPARTMENT OF TRANSPORTATION
HIGHWAYS DIVISION

PLUMBING-LEVEL 3 & LEVEL 4 PARTIAL PLANS
HAIKU PORTAL BUILDING-IB
INTERSTATE ROUTE H-3
F.A.I. PROJ. NO. I-H3-1(66)

SCALE: 1/8"=1'-0" DATE: APR 1992

SHEET NO. MM4 OF 7 SHEETS

ORIGINAL PLAN		DATE
	SURVEY PLOTTED BY	
	DRAWN BY CADD	07/12/89
	TRACED BY	
NOTE BOOK	DESIGNED BY P.L. LALOUE	09/17/89
	QUANTITIES	
NO.	CHECKED BY J.N. GUE	06/07/90

2410V161 2410: V161 MS0060.FGB/1 11OCT89-14.08.50

FED. ROAD DIST. NO.	STATE	FED. AID PROJ. NO.	FISCAL YEAR	SHEET NO.	TOTAL SHEETS
HAWAII	HAW.	I-H3-1(66)	1992	83	440

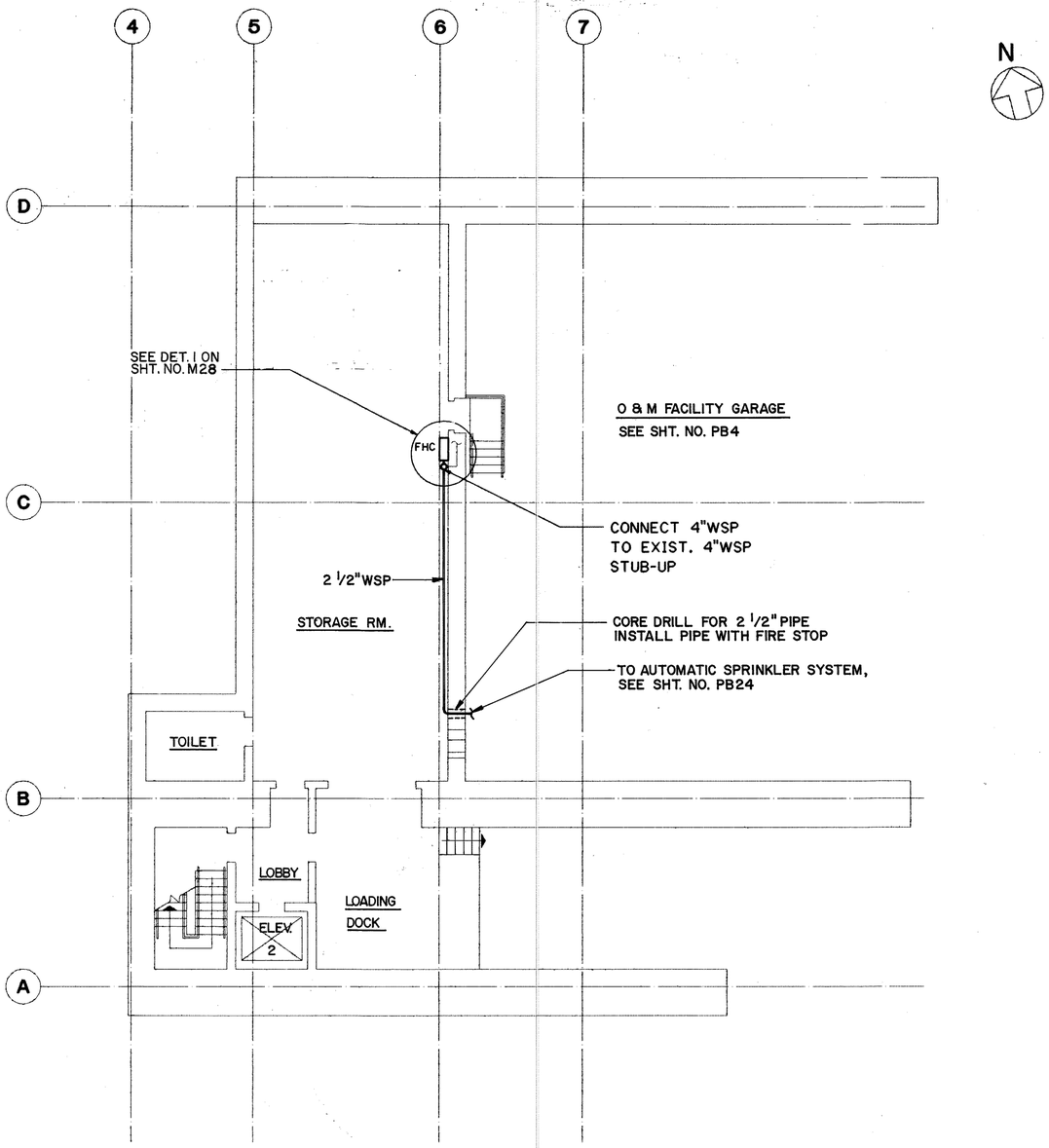

LEVEL A PARTIAL PLAN

SCALE: 1/8" = 1'-0"

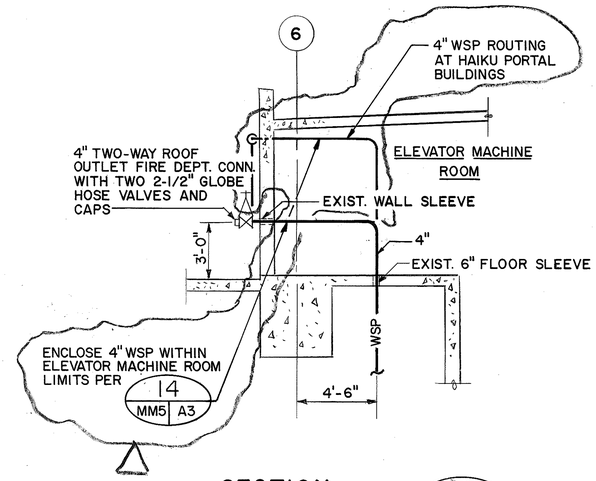

SECTION A

SCALE: 1/4" = 1'-0"

MM7 MM5
MQ9
MO6
MN8

FOR DETAIL AS-BUILT INFORMATION REFER TO CONSTRUCTION SUBMITTALS

DATE	REVISION
9/19/94	REV. PER DCN 66-052
7/22/92	ADDENDUM 1-ADDED WSP TO O & M GARAGE

STATE OF HAWAII
DEPARTMENT OF TRANSPORTATION
HIGHWAYS DIVISION

FIRE PROTECTION - LEVEL A PARTIAL PLAN

HAIKU PORTAL BUILDING-IB
INTERSTATE ROUTE H-3
F.A.I. PROJ. NO. I-H3-1(66)

SCALE: AS NOTED DATE: APR 1992

SHEET NO. MM5 OF 7 SHEETS

GRAPHIC SCALES

8' 0 8' 16'
1/8" = 1'-0"

1' 0 1' 2' 3' 4' 5' 10'
1/4" = 1'-0"

JOHN N. QUE
REGISTERED PROFESSIONAL ENGINEER
No. 6503-M
HAWAII, U.S.A.

THIS WORK WAS PREPARED BY ME OR UNDER MY SUPERVISION

		DATE
SURVEY PLOTTED BY		
DRAWN BY	B. BUNYI	01/21/90
TRACED BY		
DESIGNED BY	P. L. LALOUE	01/15/90
QUANTITIES BY		
CHECKED BY	J. N. QUE	06/01/90

ORIGINAL PLAN
NOTE BOOK
NO.

MIKE 2410: 000000 EMPTY-S.FGB;1 15FEB89-17.34.30

ADD. 83

FED. ROAD DIST. NO.	STATE	FED. AID PROJ. NO.	FISCAL YEAR	SHEET NO.	TOTAL SHEETS
HAWAII	HAW.	I-H3-1(66)	1992	84	440

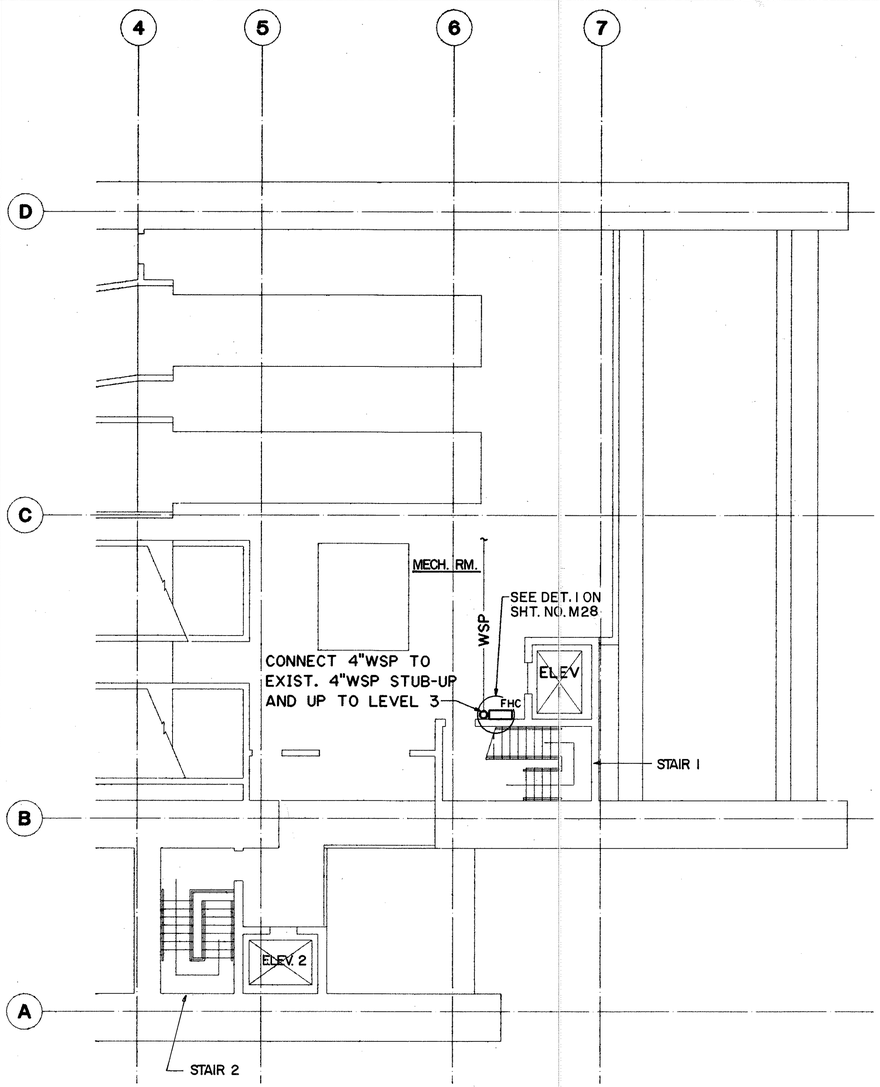

LEVEL 2 PARTIAL PLAN

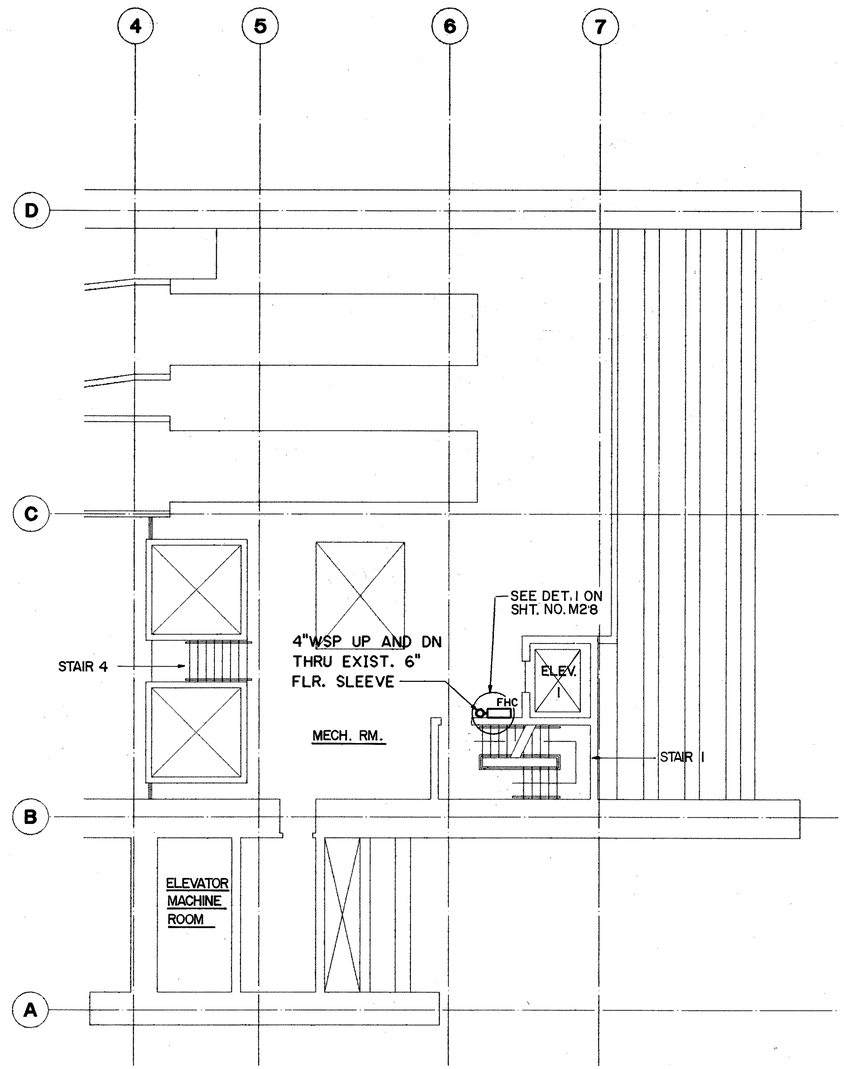

LEVEL 3 PARTIAL PLAN

N

GRAPHIC SCALE
8' 0 8' 16'
1/8"=1'-0"

JOHN N. QUE
REGISTERED PROFESSIONAL ENGINEER
No. 6503-M
HAWAII, U.S.A.

THIS WORK WAS PREPARED BY ME OR UNDER MY SUPERVISION

DATE	REVISION

STATE OF HAWAII
DEPARTMENT OF TRANSPORTATION
HIGHWAYS DIVISION

FIRE PROTECTION-LEVEL 2 & LEVEL 3 PARTIAL PLANS

HAIKU PORTAL BUILDING - IB
INTERSTATE ROUTE H-3
F.A.I. PROJ. NO. I-H3-1(66)

SCALE: 1/8"=1'-0" DATE: APR 1992

SHEET NO. MM6 OF 7 SHEETS

ORIGINAL PLAN		DATE
	SURVEY PLOTTED BY	
	DRAWN BY CADD	11/15/89
	TRACED BY	
	DESIGNED BY P. L. LALOGUE	07/13/89
NOTE BOOK	QUANTITIES BY	
	CHECKED BY J. N. QUE	06/01/90
NO.		

MIKE 24101 000000 EMPTY-S.FGB;1 15FEB89-17.34.30

FED. ROAD DIST. NO.	STATE	FED. AID PROJ. NO.	FISCAL YEAR	SHEET NO.	TOTAL SHEETS
HAWAII	HAW.	I-H3-1(66)	1992	85	440

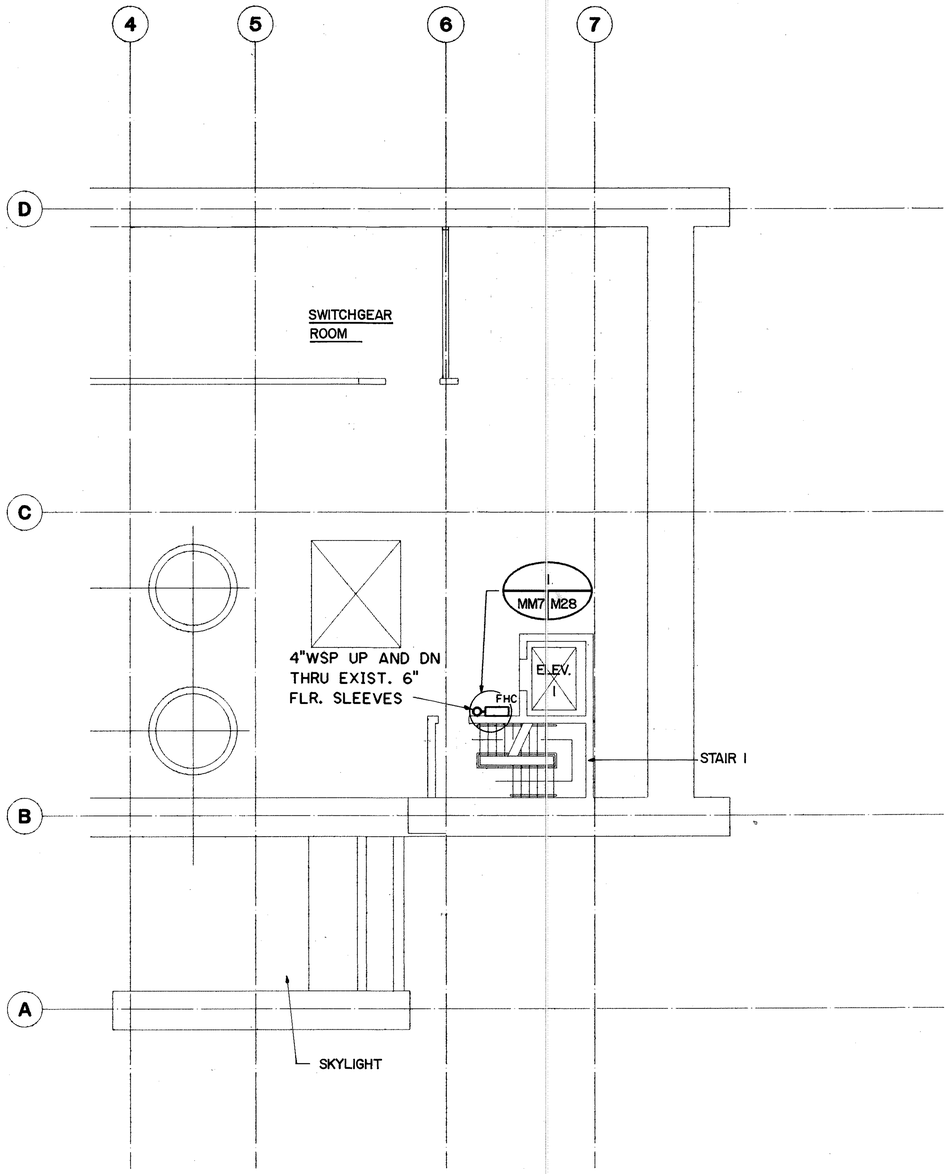

LEVEL 4 PARTIAL PLAN

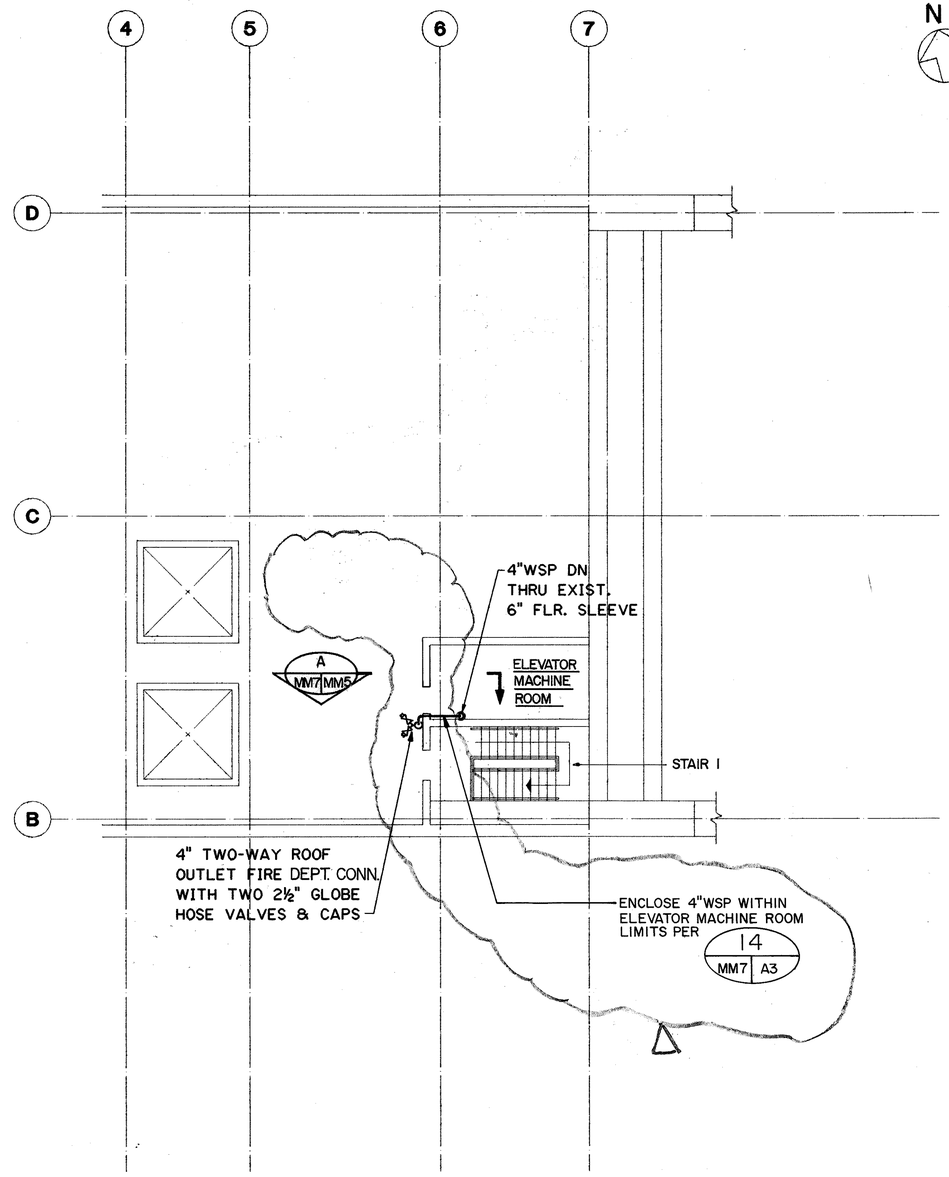

ROOF LEVEL PARTIAL PLAN

GRAPHIC SCALE

8' 0' 8' 16'

1/8"=1'-0"

JOHN N. QUE
REGISTERED PROFESSIONAL ENGINEER
No. 6503-M
HAWAII, U.S.A.

THIS WORK WAS PREPARED BY ME OR UNDER MY SUPERVISION

DATE	REVISION
9/19/94	REV. PER DCN 66-052

STATE OF HAWAII
DEPARTMENT OF TRANSPORTATION
HIGHWAYS DIVISION

FIRE PROTECTION-LEVEL 4 & ROOF PARTIAL PLANS

HAIKU PORTAL BUILDING - IB

INTERSTATE ROUTE H-3

F.A.I. PROJ. NO. I-H3-1(66)

SCALE 1/8"=1'-0" DATE: APR 1992

SHEET NO. MM7 OF 7 SHEETS

ORIGINAL PLAN		DATE
	SURVEY PLOTTED BY	
	DRAWN BY B. BUNYI	1/26/89
NOTE BOOK	TRACED BY	
	DESIGNED BY P. L. LALOQUE	11/10/89
NO.	QUANTITIES BY	
	CHECKED BY J. N. QUE	06/01/90

2410V151 2410: V161 MS0058.FGB71 130CT89-13.20.10

FED. ROAD DIST. NO.	STATE	FED. AID PROJ. NO.	FISCAL YEAR	SHEET NO.	TOTAL SHEETS
HAWAII	HAW.	I-H3-1(66)	1992	86	440

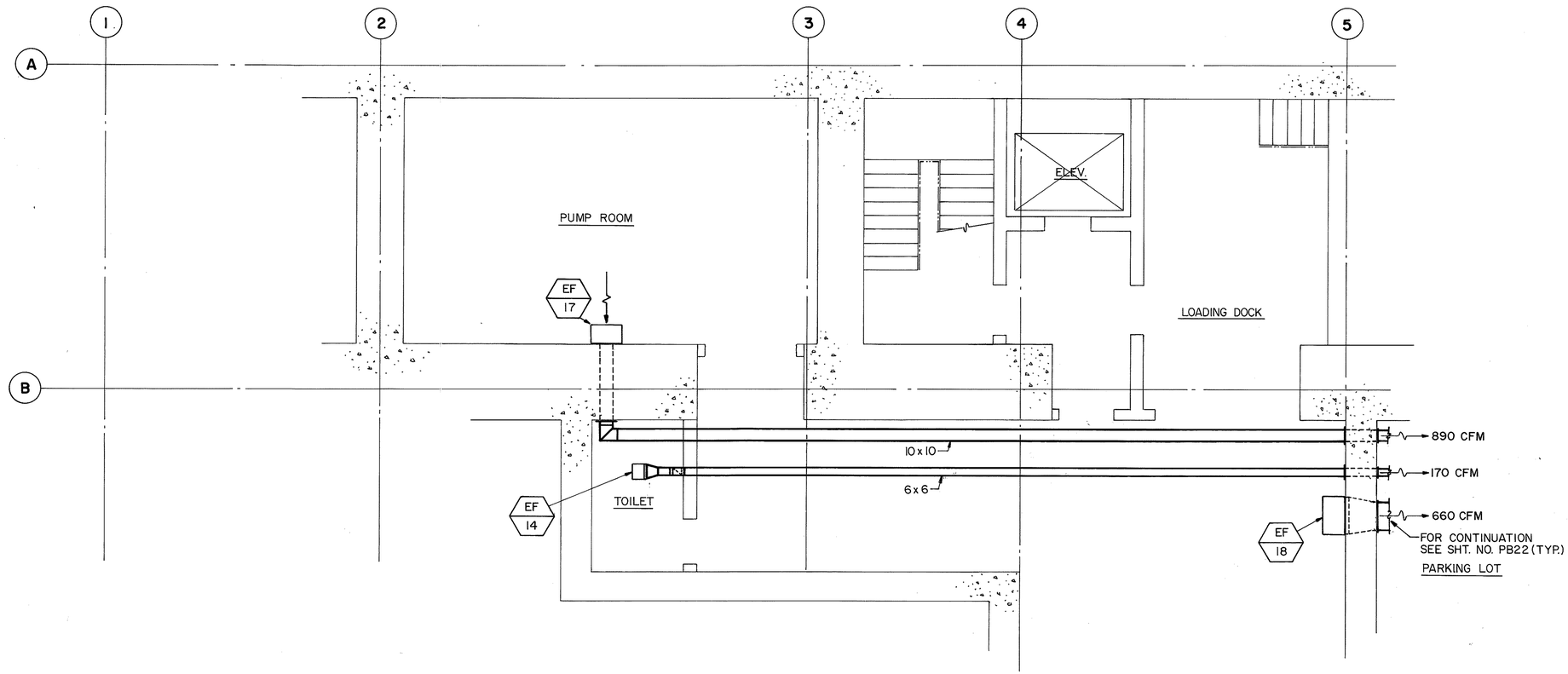

LEVEL A PARTIAL PLAN

ORIGINAL PLAN	SURVEY PLOTTED BY	DATE
	DRAWN BY B. BUNTI	3/12/89
	TRACED BY	"
NOTE BOOK	DESIGNED BY A. H. PORTIER	2/20/89
	QUANTITIES BY	"
No.	CHECKED BY J. N. QUE	6/08/90

GRAPHIC SCALE
1' 0 1' 2' 3' 4' 5'
1/4" = 1'-0"

JOHN M. GOO
REGISTERED PROFESSIONAL ENGINEER
No. 6503-M
HAWAII, U.S.A.

THIS WORK WAS PREPARED BY ME OR UNDER MY SUPERVISION.

FOR DETAIL AS-BUILT INFORMATION REFER TO CONSTRUCTION SUBMITTALS

STATE OF HAWAII
DEPARTMENT OF TRANSPORTATION
HIGHWAYS DIVISION

HVAC-LEVEL A
PARTIAL PLAN

HAIKU PORTAL BUILDING-OB

INTERSTATE ROUTE H-3
F.A.I. PROJ. NO. I-H3-1(66)

SCALE: 1/4"=1'-0" DATE: APR 1992

SHEET NO. MQ 1 OF 9 SHEETS

FED. ROAD DIST. NO.	STATE	FED. AID PROJ. NO.	FISCAL YEAR	SHEET NO.	TOTAL SHEETS
HAWAII	HAW.	I-H3-1(66)	1992	87	440

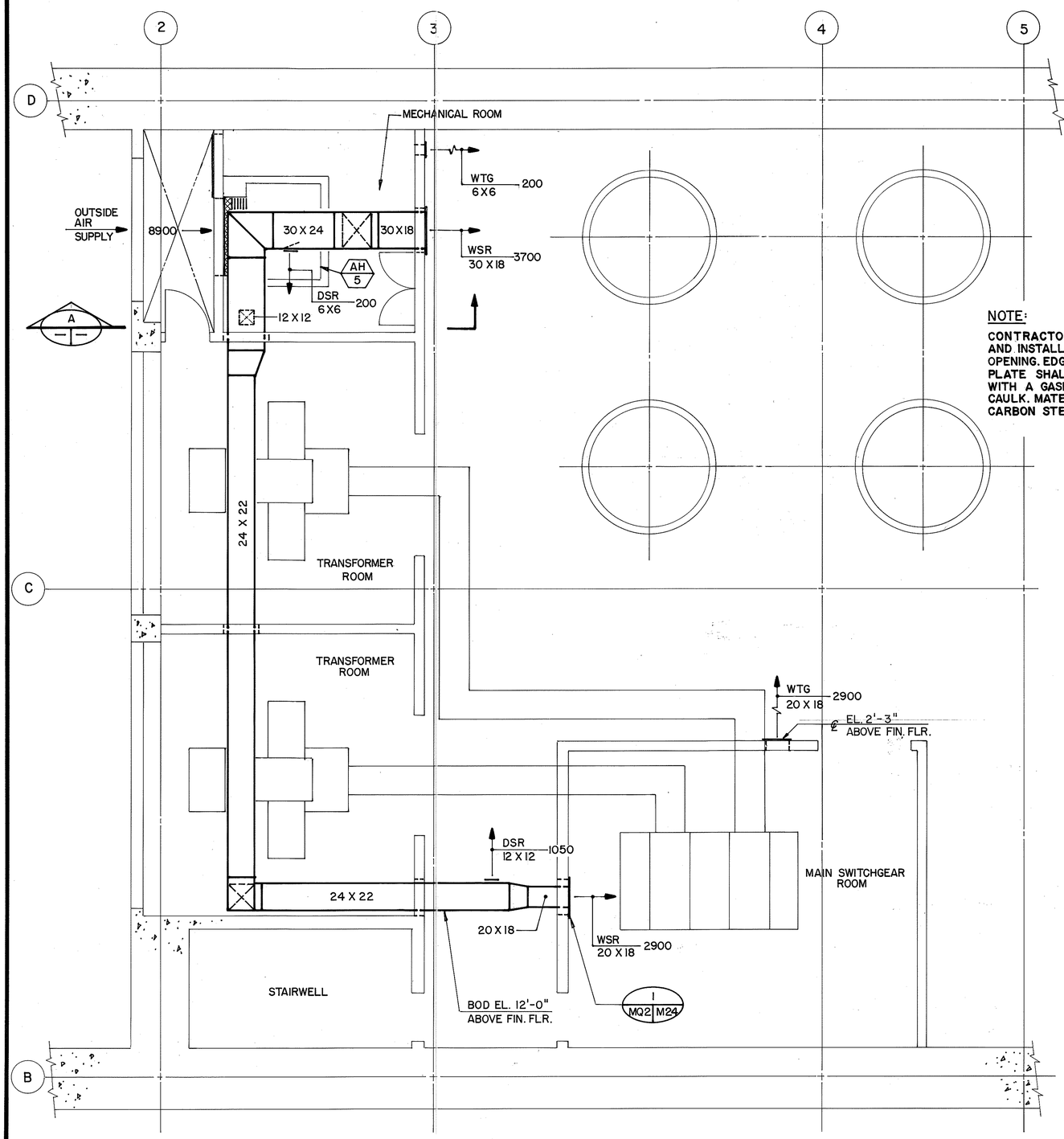

NOTE:

CONTRACTOR SHALL PROVIDE AND INSTALL CLOSURE FOR OPENING. EDGES OF CLOSURE PLATE SHALL BE SEALED WITH A GASKET MATERIAL OR CAULK. MATERIAL SHALL BE CARBON STEEL, GALVANIZED.

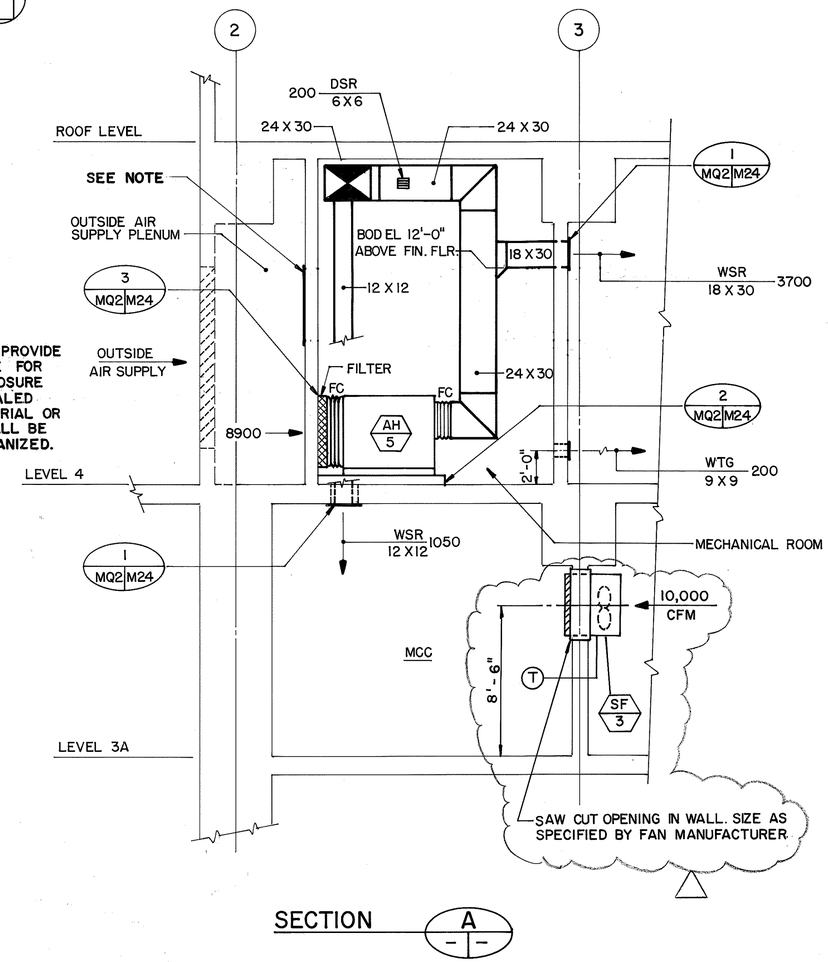

SECTION A

3/8/94	REV. SECT. 'A', ADDED SF PER
	DCN 66-039
5/13/93	DELETED AUX. COOLING FANS & ASSOC.
	DUCTWORK PER DCN 66-004
DATE	REVISION

GRAPHIC SCALE

5' 0' 5' 10'

1/4" = 1'-0"

JOHN N. QUE REGISTERED PROFESSIONAL ENGINEER No. 6503-M HAWAII, U.S.A.

THIS WORK WAS PREPARED BY ME OR UNDER MY SUPERVISION

STATE OF HAWAII
DEPARTMENT OF TRANSPORTATION
HIGHWAYS DIVISION

HVAC — LEVEL 4

PARTIAL PLAN AND SECTION

HAIKU PORTAL BUILDING - OB

INTERSTATE ROUTE H-3

F.A.I. PROJ. NO. I-H3-1(66)

SCALE: 1/4" = 1'-0" DATE: APR 1992

SHEET NO. MQ2 OF 9 SHEETS

ORIGINAL PLAN		DATE
	SURVEY PLOTTED BY	
	DRAWN BY B. BUNYI	1/14/89
	TRACED BY	
	DESIGNED BY D. E. DRYDEN	10/23/89
NOTE BOOK	QUANTITIES BY	
	CHECKED BY J. N. QUE	6/05/90
No.		

FED. ROAD DIST. NO.	STATE	FED. AID PROJ. NO.	FISCAL YEAR	SHEET NO.	TOTAL SHEETS
HAWAII	HAW.	I-H3-1(66)	1992	88	440

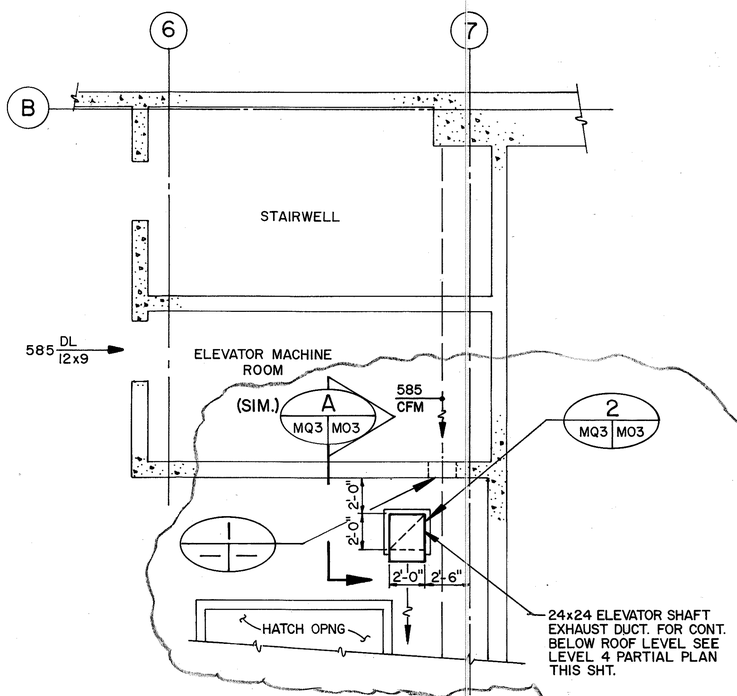

ROOF LEVEL PARTIAL PLAN
SCALE: 1/4"=1'-0"

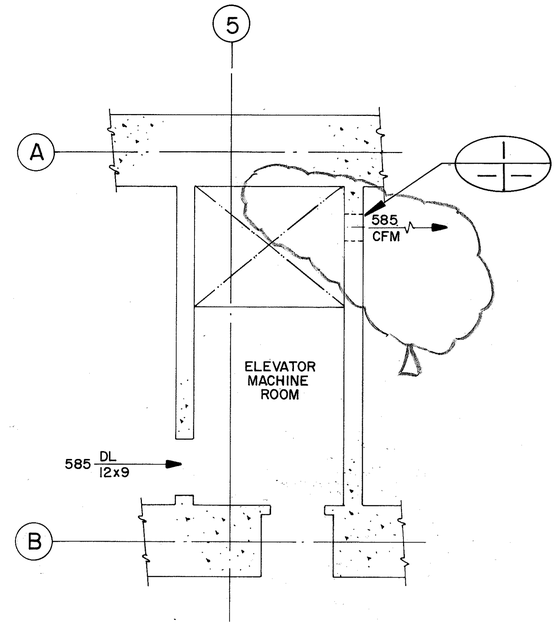

LEVEL 3 PARTIAL PLAN
SCALE: 1/4"=1'-0"

NOTE
FOR SAWCUT OPENINGS—BUSH HAMMER EXPOSED EDGES TO EVEN SURFACE, GRIND SMOOTH. PAINT EDGES OF OPENINGS AND EXPOSED REBAR WITH EPOXY PAINT.

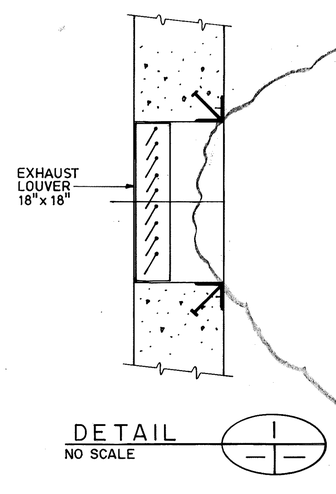

DETAIL
NO SCALE

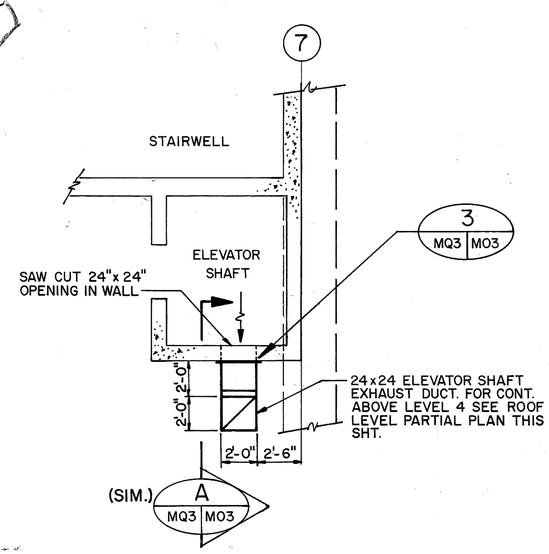

LEVEL 4 PARTIAL PLAN
SCALE: 1/4"=1'-0"

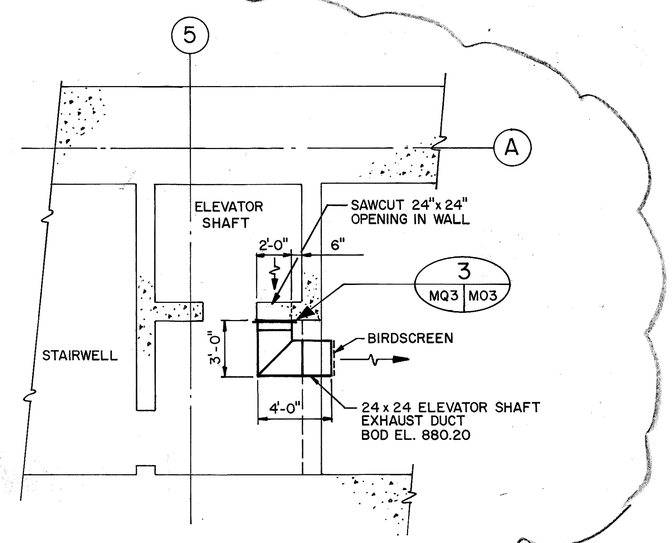

LEVEL 2 PARTIAL PLAN
SCALE: 1/4"=1'-0"

GRAPHIC SCALE
1' 0 1' 2' 3' 4' 5' 10'
1/4"=1'-0"

JOHN N. QUE
REGISTERED PROFESSIONAL ENGINEER
No. 6503-M
HAWAII, U.S.A.

THIS WORK WAS PREPARED BY ME OR UNDER MY SUPERVISION

DATE	REVISION
9/14/94	REV. PER DCN 66-052

STATE OF HAWAII
DEPARTMENT OF TRANSPORTATION
HIGHWAYS DIVISION

HVAC-ELEVATOR EQUIPMENT ROOMS-PLANS & DETAILS
HAIKU PORTAL BUILDING-OB
INTERSTATE ROUTE H-3
F.A.I. PROJ. NO. I-H3-1(66)

SCALE: AS NOTED DATE: APR 1992
SHEET NO. MQ3 OF 9 SHEETS

		DATE
ORIGINAL PLAN	SAWCUT PLOTTED BY	11/20/89
	DRAWN BY D.E. DRYDEN	11/20/89
	TRACED BY	11/15/89
NOTE BOOK	DESIGNED BY D.E. DRYDEN	06/05/89
	QUANTITIES BY	
No.	CHECKED BY J. N. QUE	

FED. ROAD DIST. NO.	STATE	FED. AID PROJ. NO.	FISCAL YEAR	SHEET NO.	TOTAL SHEETS
HAWAII	HAW.	I-H3-1(66)	1992	89	440

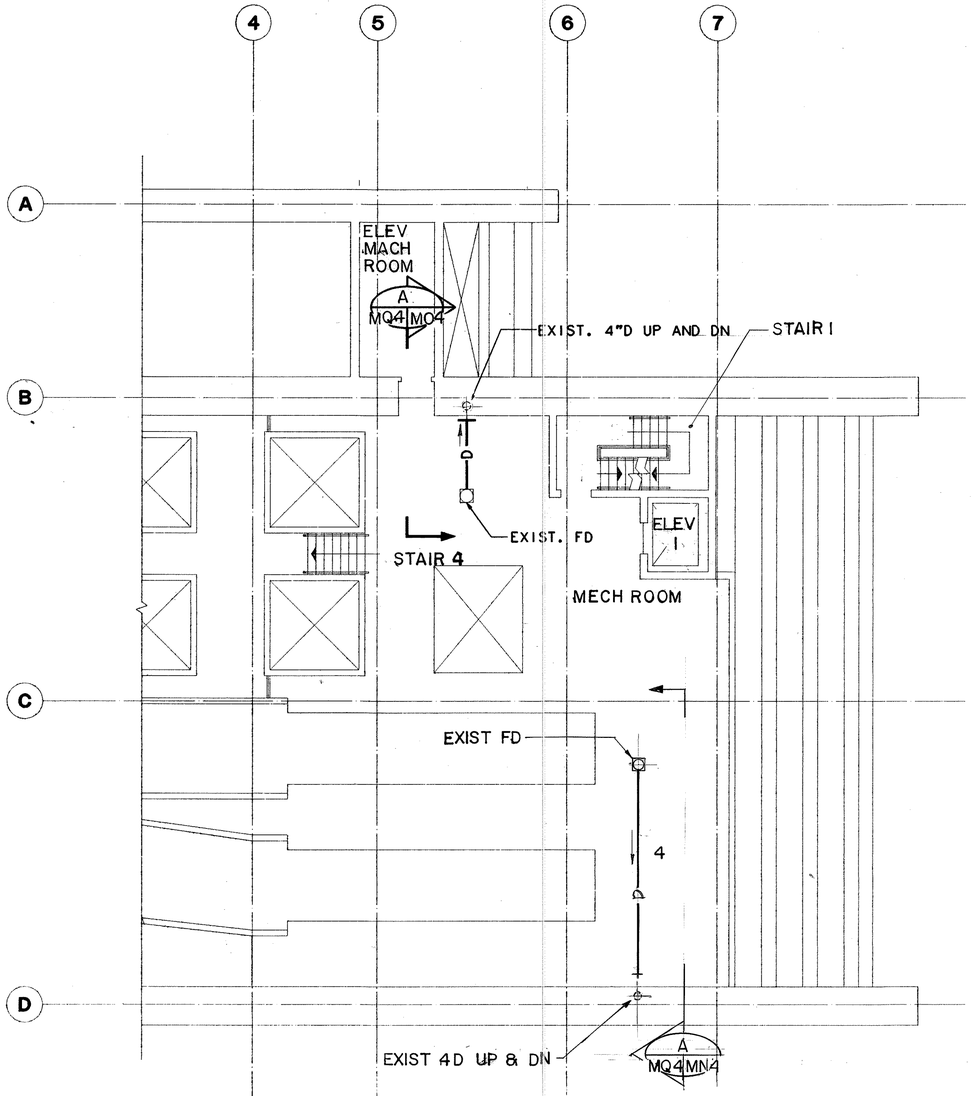

LEVEL 3 PARTIAL PLAN

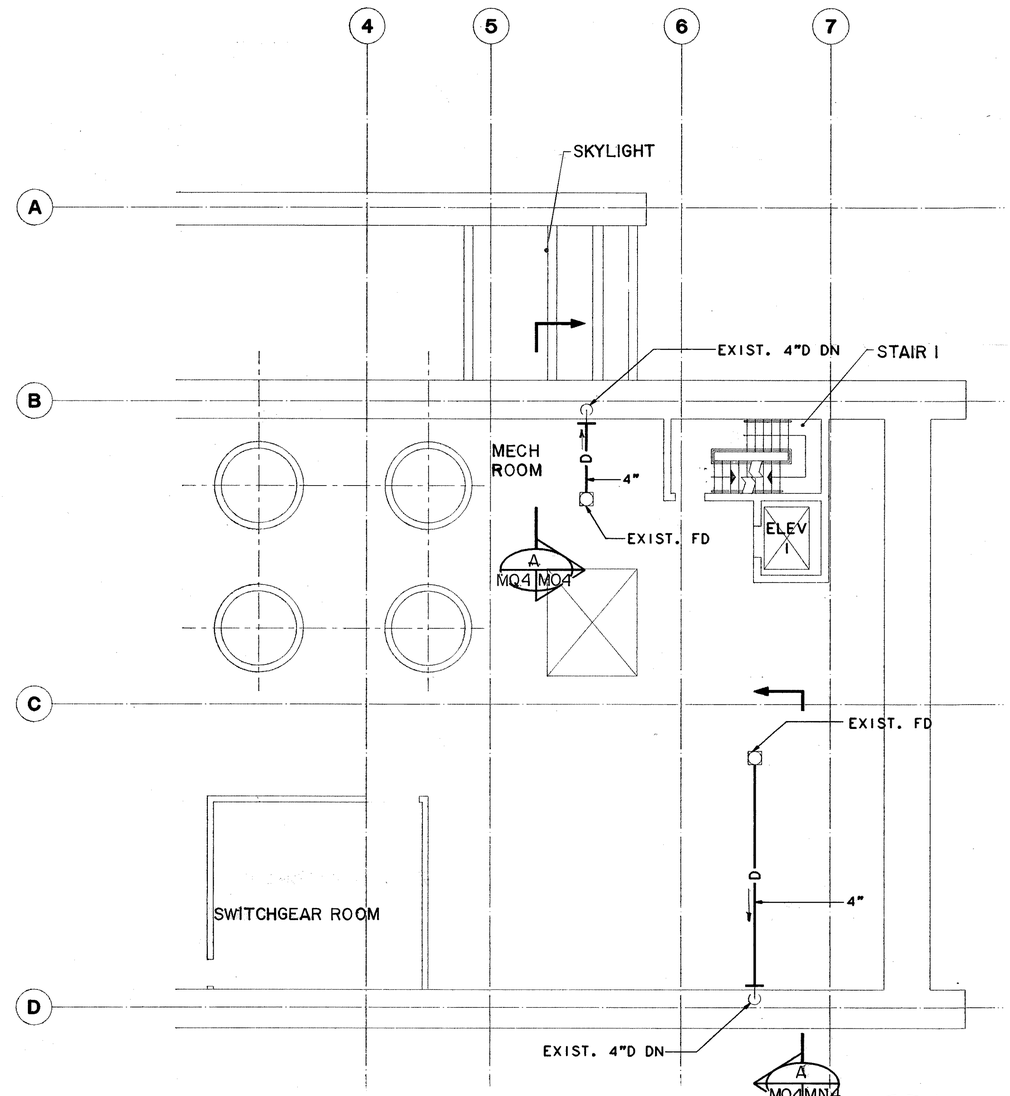

LEVEL 4 PARTIAL PLAN

GRAPHIC SCALE

8' 0' 8' 16'

1/8"=1'-0"

JOHN N. QUE
REGISTERED PROFESSIONAL ENGINEER
No. 6503-M
HAWAII, U.S.A.

THIS WORK WAS PREPARED BY ME OR UNDER MY SUPERVISION

FOR DETAIL AS-BUILT INFORMATION REFER TO CONSTRUCTION SUBMITTALS

DATE	REVISION

STATE OF HAWAII
DEPARTMENT OF TRANSPORTATION
HIGHWAYS DIVISION

PLUMBING-LEVEL 3 & LEVEL 4 PARTIAL PLANS

HAIKU PORTAL BUILDING-OB

INTERSTATE ROUTE H-3

F.A.I. PROJ. NO. I-H3-1(66)

SCALE: 1/8"=1'-0" DATE: APR 1992

SHEET NO. MQ4 OF 9 SHEETS

ORIGINAL PLAN		DATE
	SURVEY PLOTTED BY B. BUNYI	07/13/90
	DRAWN BY	
	TRACED BY	07/10/90
NOTE BOOK	DESIGNED BY P. L. LALOGUE	
	QUANTITIES BY	06/06/90
NO.	CHECKED BY J. N. QUE	

2410V161 2410: V161 MS0059.FGB;1 100CT89-17.19.00

FED. ROAD DIST. NO.	STATE	FED. AID PROJ. NO.	FISCAL YEAR	SHEET NO.	TOTAL SHEETS
HAWAII	HAW.	I-H3-1(66)	1992	90	440

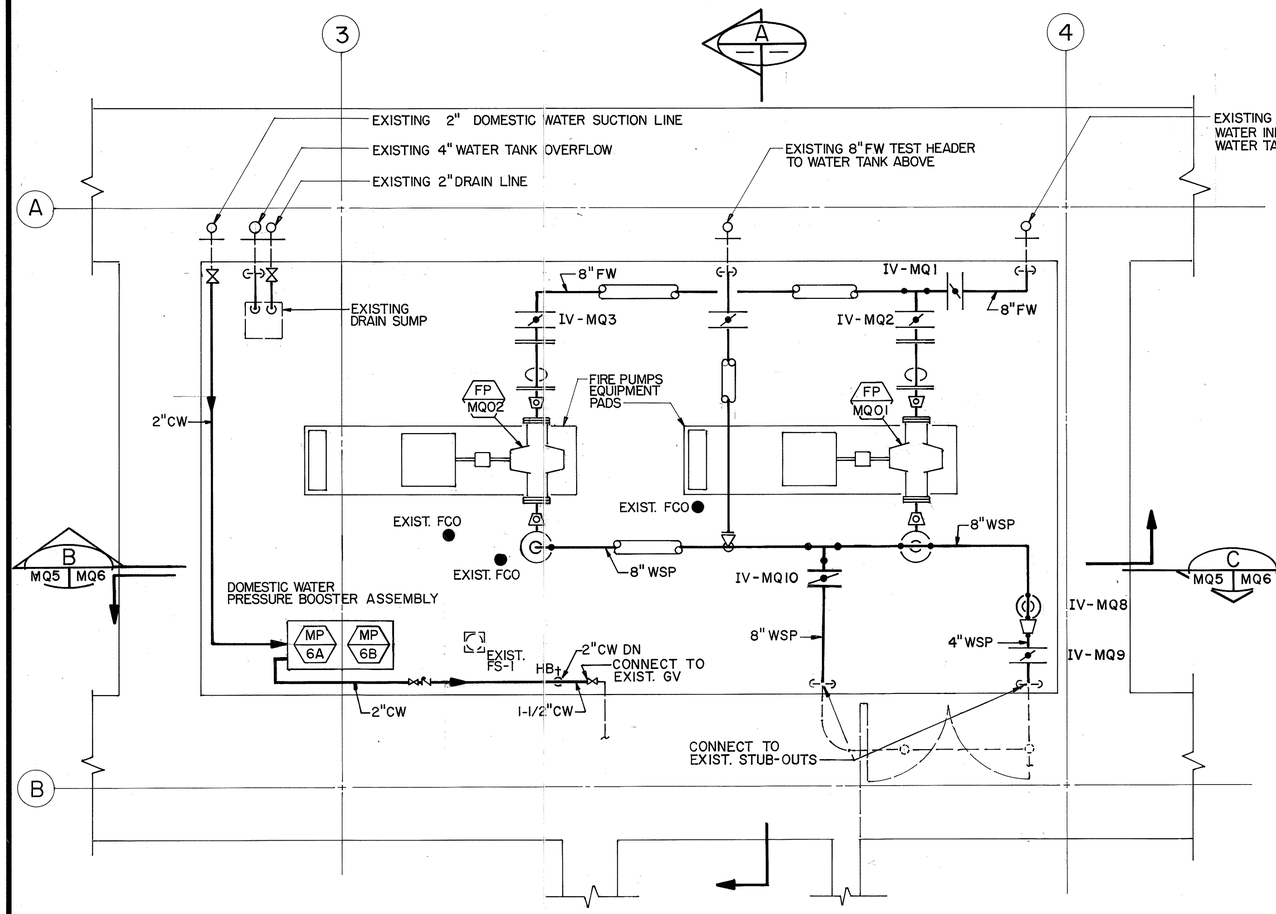

PUMP ROOM PARTIAL PLAN

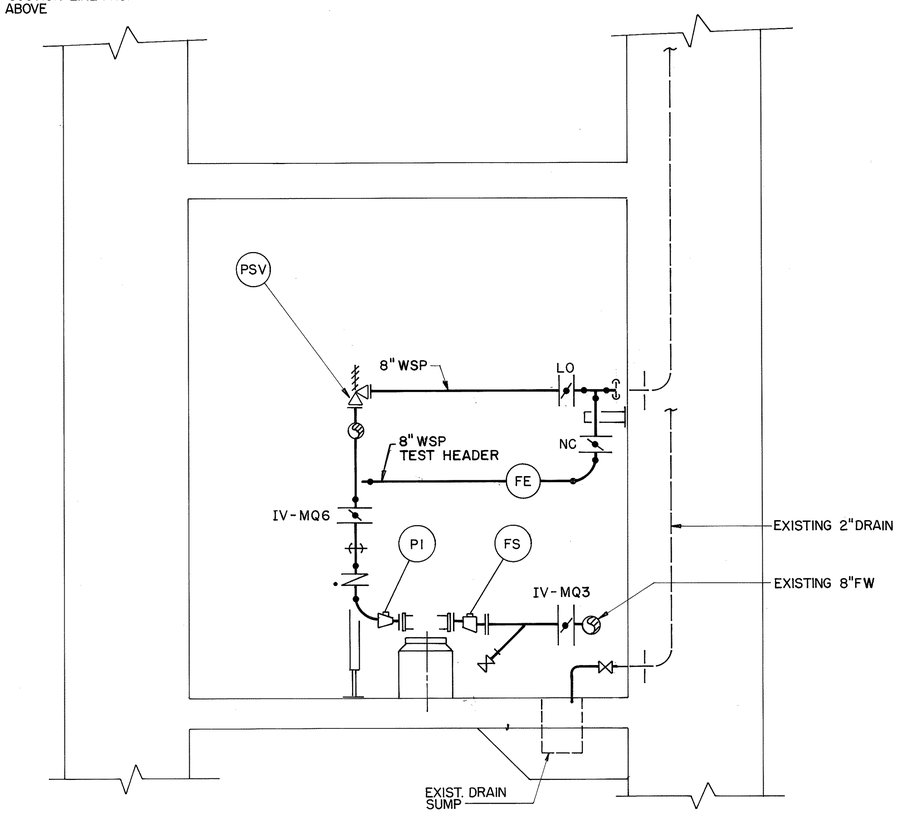

SECTION A

GRAPHIC SCALE
1' 0 1' 2' 3' 4' 5'
3/8" = 1'-0"

JOHN M. QUE
REGISTERED PROFESSIONAL ENGINEER
No. 6503-M
HAWAII, U.S.A.

THIS WORK WAS PREPARED BY ME OR UNDER MY SUPERVISION

DATE	REVISION

STATE OF HAWAII
DEPARTMENT OF TRANSPORTATION
HIGHWAYS DIVISION

PLUMBING - PUMP ROOM
PARTIAL PLAN & SECTION
HAIKU PORTAL BUILDING - OB
INTERSTATE ROUTE H-3
F.A.I. PROJ. NO. I-H3-1(66)

SCALE: 3/8" = 1'-0" DATE: APR 1992
SHEET NO. MQ5 OF 9 SHEETS

		DATE
ORIGINAL PLAN	SURVEY PLOTTED BY	
	DRAWN BY B. BUNYI	12/10/89
	TRACED BY	
NOTE BOOK	DESIGNED BY P. L. LALOUE	1/09/89
	QUANTITIES BY	
No.	CHECKED BY J. N. QUE	05/04/90

FED. ROAD DIST. NO.	STATE	FED. AID PROJ. NO.	FISCAL YEAR	SHEET NO.	TOTAL SHEETS
HAWAII	HAW.	I-H3-1(66)	1992	91	440

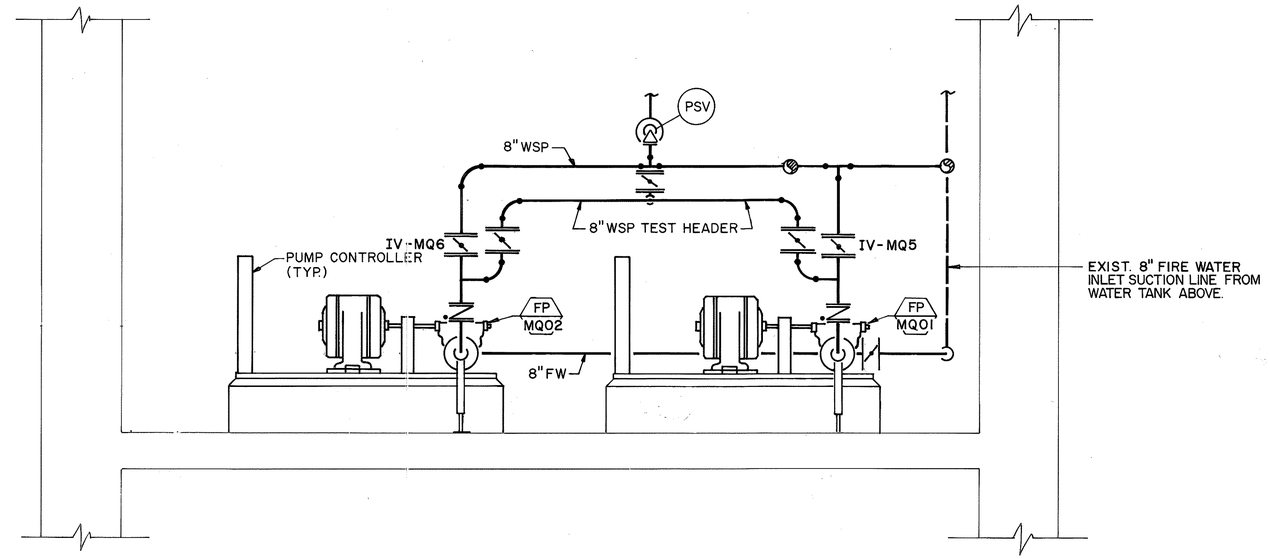

SECTION B (MQ5 | MQ6)
SCALE: 3/8"=1'-0"

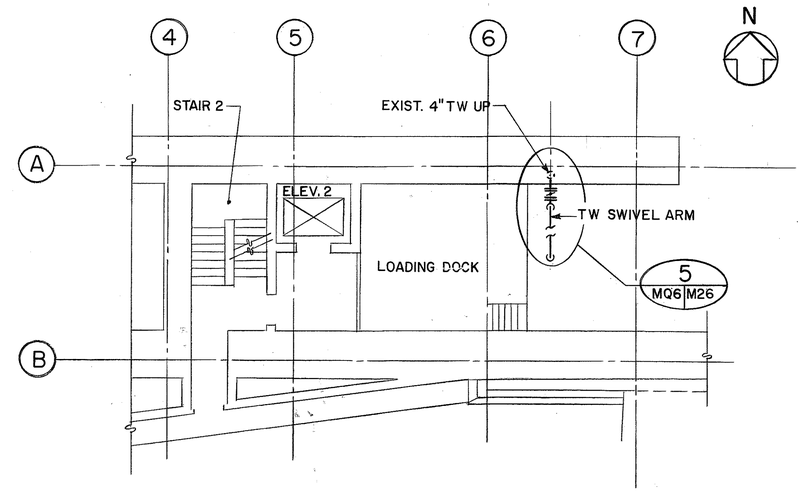

LEVEL A PARTIAL PLAN
SCALE: 1/8"=1'-0"

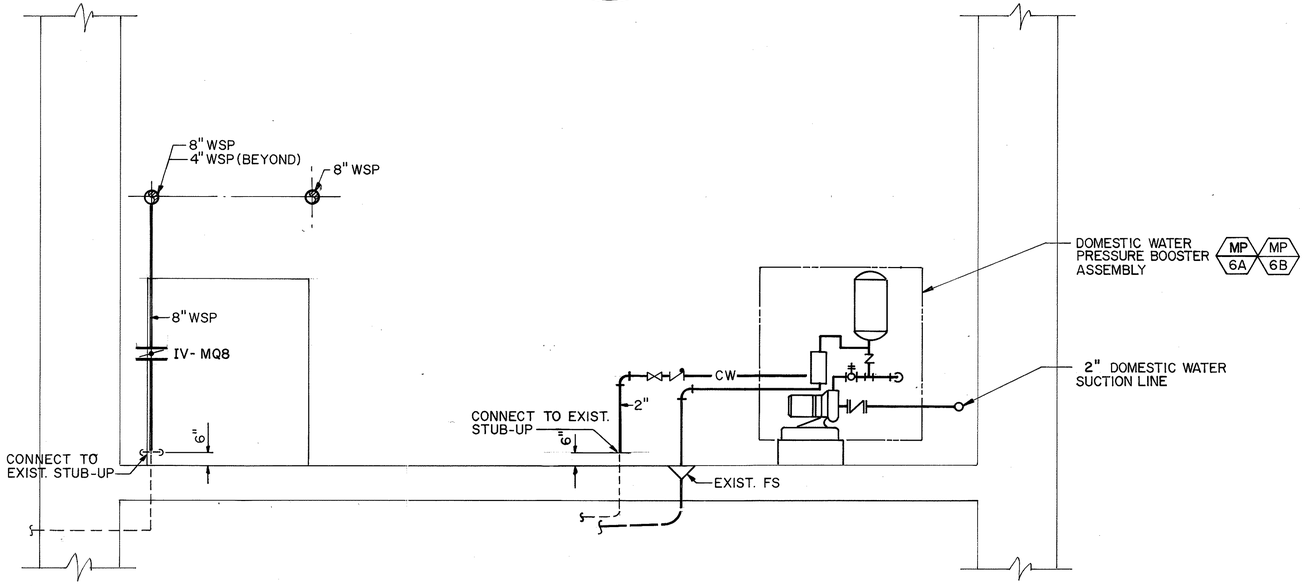

SECTION C (MQ5 | MQ6)
SCALE: 3/8"=1'-0"

GRAPHIC SCALES
8' 0' 8' 16'
1/8"=1'-0"
1' 0 1' 2' 3' 4' 5'
3/8"=1'-0"

JOHN M. QUE
REGISTERED PROFESSIONAL ENGINEER
No. 6503-M
HAWAII, U.S.A.

THIS WORK WAS PREPARED BY ME OR UNDER MY SUPERVISION

ORIGINAL PLAN		DATE
	SURVEY PLOTTED BY	
	DRAWN BY B. BUNYI	12/15/89
	TRACED BY "	"
NOTE BOOK	DESIGNED BY P. L. LALOUE	11/09/89
	QUANTITIES BY "	"
No.	CHECKED BY J. N. QUE	06/04/92

DATE	REVISION

STATE OF HAWAII
DEPARTMENT OF TRANSPORTATION
HIGHWAYS DIVISION

PUMP ROOM SECTIONS & PARTIAL PLAN

HAIKU PORTAL BUILDING—OB
INTERSTATE ROUTE H-3
F.A.I. PROJ. NO. I-H3-1(66)

SCALE: AS NOTED DATE: APR 1992
SHEET NO. MQ6 OF 9 SHEETS

FED. ROAD DIST. NO.	STATE	FED. AID PROJ. NO.	FISCAL YEAR	SHEET NO.	TOTAL SHEETS
HAWAII	HAW.	I-H3-1(66)	1992	92	440

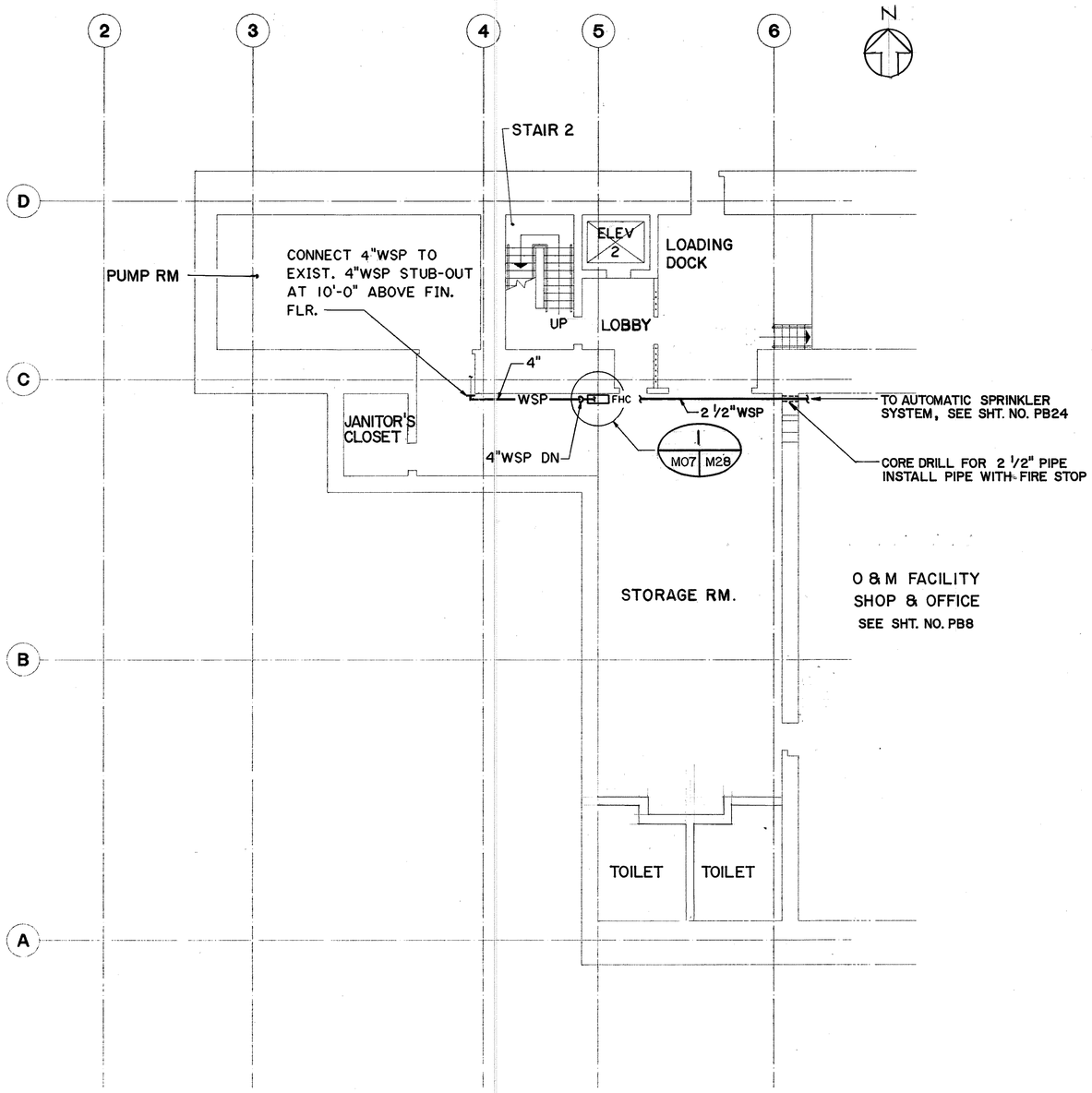

LEVEL A PARTIAL PLAN

FOR DETAIL AS-BUILT INFORMATION
REFER TO CONSTRUCTION SUBMITTALS

DATE	REVISION
7/22/92	ADDENDUM 1 - ADDED WSP TO O&M SHOP/OFFICE

GRAPHIC SCALE
8' 0' 8' 16'
1/8"=1'-0"

JOHN N. QUE
REGISTERED PROFESSIONAL ENGINEER
No. 6503-M
HAWAII, U.S.A.

THIS WORK WAS PREPARED BY ME OR UNDER MY SUPERVISION

STATE OF HAWAII
DEPARTMENT OF TRANSPORTATION
HIGHWAYS DIVISION

FIRE PROTECTION - LEVEL A PARTIAL PLAN

HAIKU PORTAL BUILDING-OB
INTERSTATE ROUTE H-3
F.A.I. PROJ. NO. I-H3-1(66)

SCALE: 1/8"=1'-0" DATED: APR 1992

SHEET NO. MQ7 OF 9 SHEETS

		DATE
SURVEY PLOTTED BY		
DRAWN BY	B. BUNYI	02/10/90
TRACED BY		
DESIGNED BY	P. L. LALOQUE	02/06/90
QUANTITIES BY		
CHECKED BY	J. N. QUE	06/08/90

ORIGINAL PLAN
NOTE BOOK
NO.

2410V161 2410: V161 MS0061.FGB/1 110CT89-11.20.30

ADD. 92

FED. ROAD DIST. NO.	STATE	FED. AID PROJ. NO.	FISCAL YEAR	SHEET NO.	TOTAL SHEETS
HAWAII	HAW.	I-H3-1(66)	1992	93	440

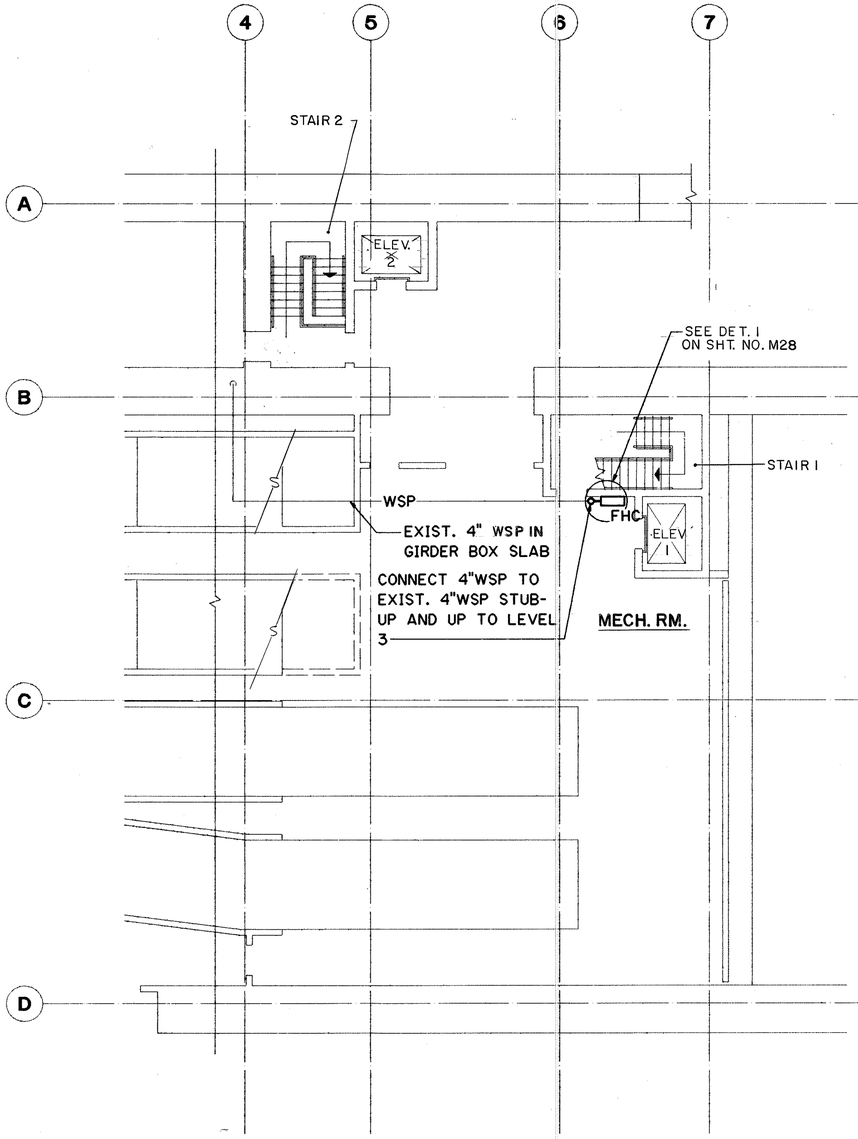

LEVEL 2 PARTIAL PLAN

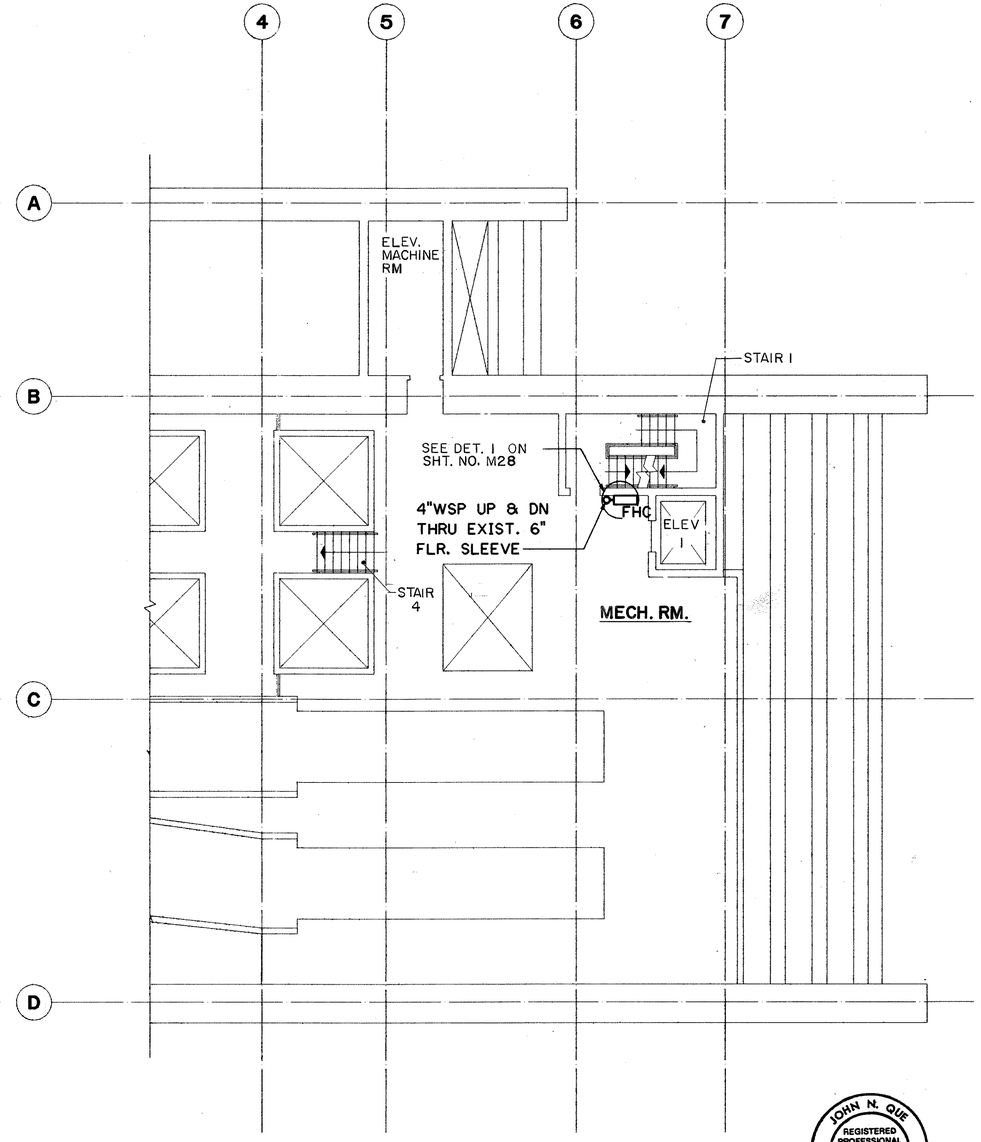

LEVEL 3 PARTIAL PLAN

GRAPHIC SCALE
8' 0' 8' 16'
1/8"=1'-0"

JOHN N. QUE
REGISTERED PROFESSIONAL ENGINEER
No. 6503-M
HAWAII, U.S.A.

THIS WORK WAS PREPARED BY ME OR UNDER MY SUPERVISION

DATE	REVISION

STATE OF HAWAII
DEPARTMENT OF TRANSPORTATION
HIGHWAYS DIVISION

FIRE PROTECTION-LEVEL 2 & LEVEL 3 PARTIAL PLANS

HAIKU PORTAL BUILDING - OB
INTERSTATE ROUTE H-3
F.A.I. PROJ. NO. I-H3-1(66)

SCALE: 1/8"=1'-0" DATE: APR 1992

SHEET NO. MQ8 OF 9 SHEETS

ORIGINAL PLAN		DATE
	SURVEY PLOTTED BY	
	DRAWN BY B. BUNYI	02/04/90
	TRACED BY	" "
NOTE BOOK	DESIGNED BY P. L. LALOUE	01/23/90
	QUANTITIES BY	" "
NO.	CHECKED BY J. N. QUE	06/08/90

2410V161 2410: V161 MS0055.FGB;1 12OCT89-09.59.50

FED. ROAD DIST. NO.	STATE	FED. AID PROJ. NO.	FISCAL YEAR	SHEET NO.	TOTAL SHEETS
HAWAII	HAW.	I-H3-1(66)	1992	94	440

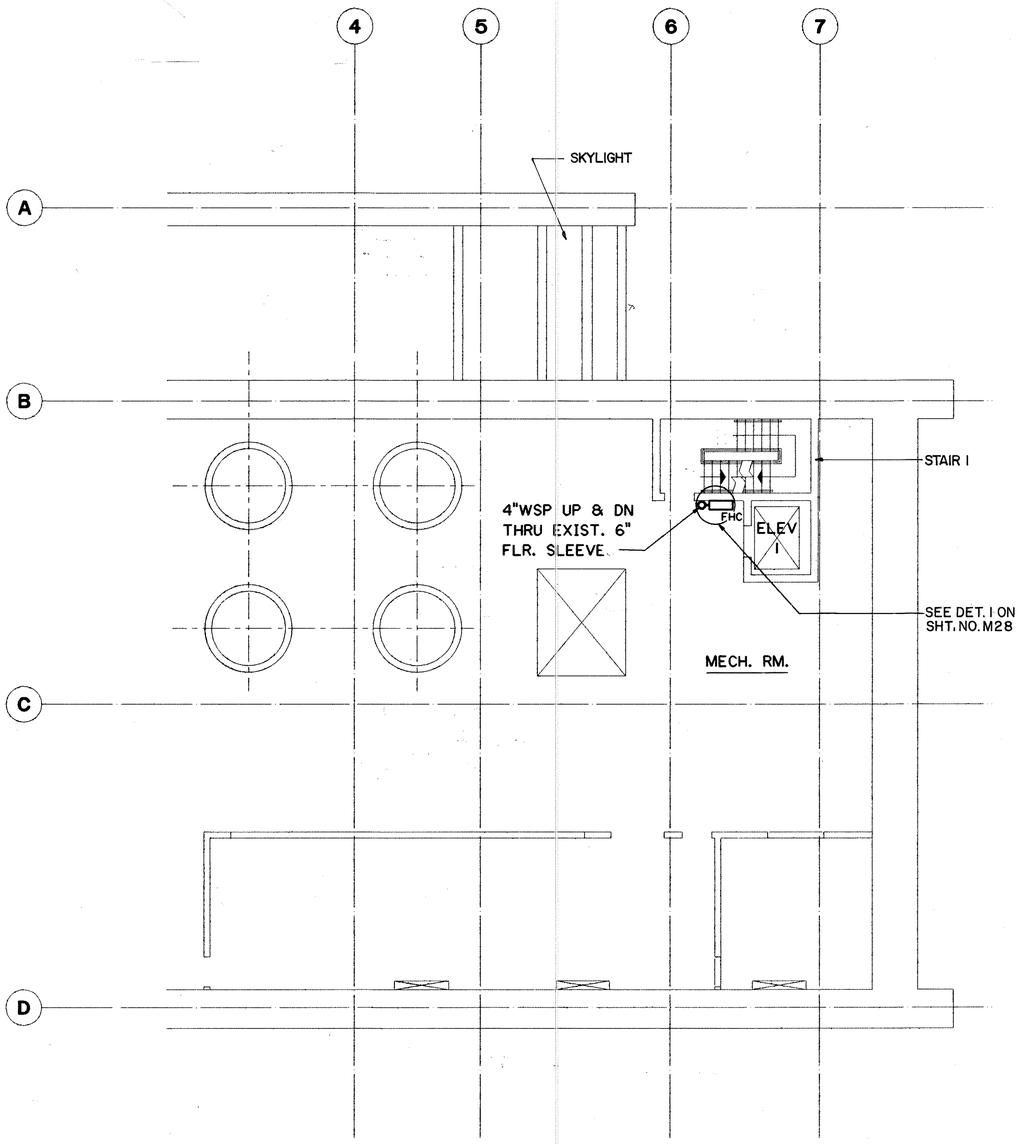

LEVEL 4 PARTIAL PLAN

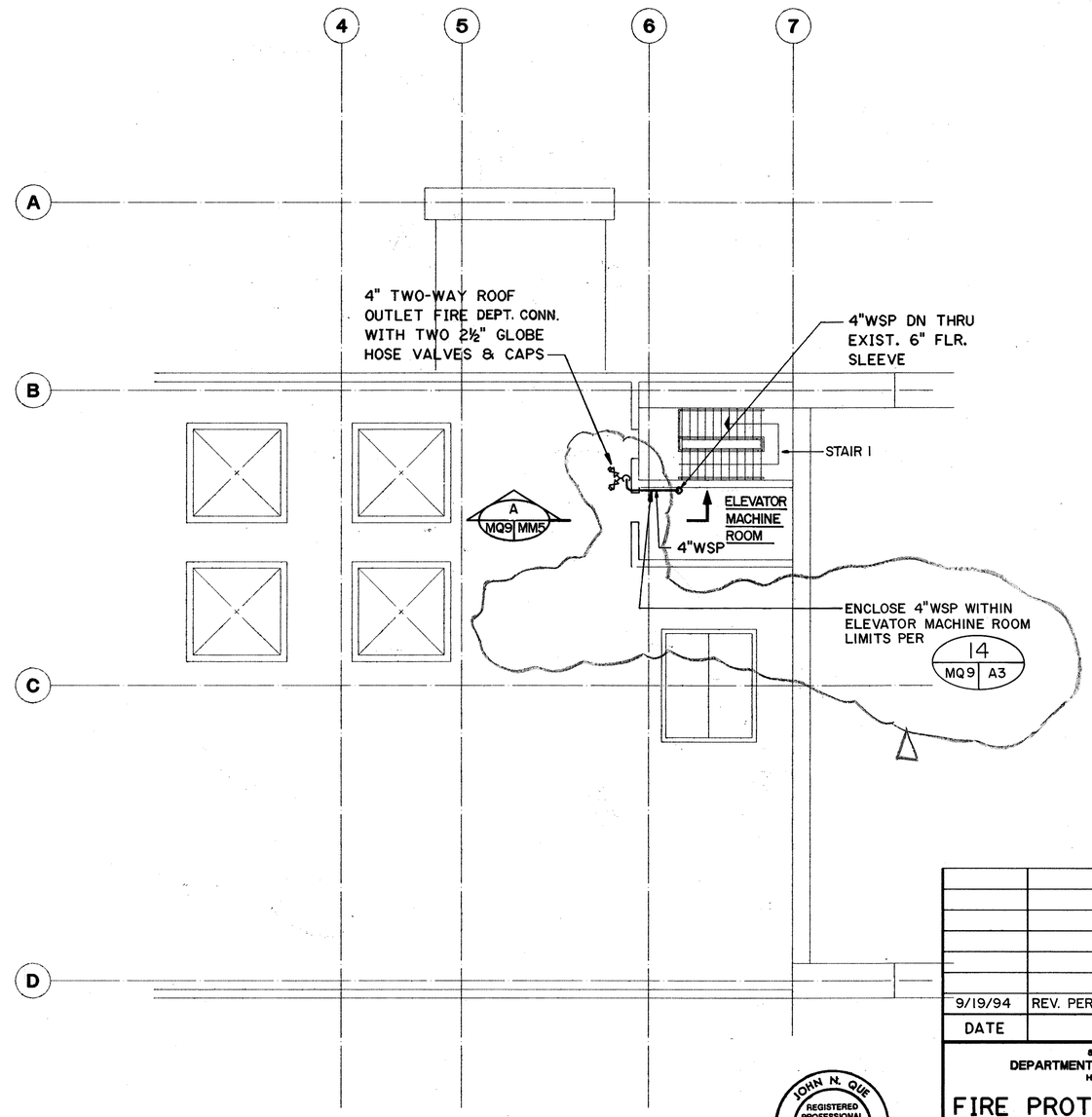

ROOF LEVEL PARTIAL PLAN

GRAPHIC SCALE

8' 0' 8' 16'

1/8"=1'-0"

JOHN N. QUE
REGISTERED PROFESSIONAL ENGINEER
No. 6503-M
HAWAII, U.S.A.

THIS WORK WAS PREPARED BY ME OR UNDER MY SUPERVISION

DATE	REVISION
9/19/94	REV. PER DCN 66-052

STATE OF HAWAII
DEPARTMENT OF TRANSPORTATION
HIGHWAYS DIVISION

FIRE PROTECTION -LEVEL 4 & ROOF PARTIAL PLANS

HAIKU PORTAL BUILDING - OB
INTERSTATE ROUTE H-3
F.A.I. PROJ. NO. I-H3-1(66)

SCALE: ⅛"=1'-0" DATE: APR. 1992

SHEET NO. MQ9 OF 9 SHEETS

ORIGINAL PLAN	SURVEY PLOTTED BY	DATE
	DRAWN BY B. BUNYI	03/12/90
NOTE BOOK	TRACED BY	
	DESIGNED BY P. L. LALOUE	02/27/90
	QUANTITIES BY	
NO.	CHECKED BY J. N. QUE	06/08/90

2410V161 2410: V161 MS0056.FGB>1 12OCT89-11.28.10