INDEX TO DRAWINGS

FED. ROAD DIST. NO.	STATE	FED. AID PROJ. NO.	FISCAL YEAR	SHEET NO.	TOTAL SHEETS
HAWAII	HAW.	I-H3-1(50)	1989	82	164

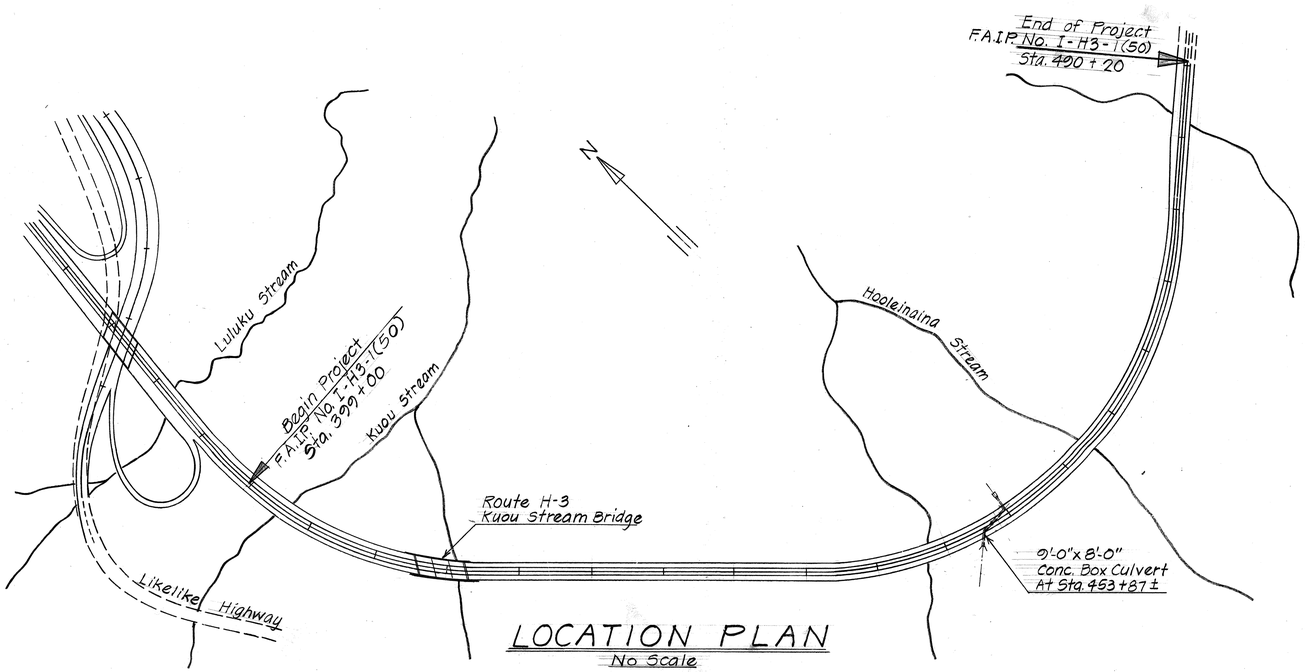

LOCATION PLAN
No Scale

ORIGINAL PLAN		SURVEY PLOTTED BY	DATE
		DRAWN BY	7/83
		TRACED BY	"
NOTE BOOK		DESIGNED BY	"
		QUANTITIES BY	"
No.		CHECKED BY D.C.O.	7/83

STATE OF HAWAII
DEPARTMENT OF TRANSPORTATION
LAND TRANSPORTATION FACILITIES DIVISION

ROUTE H-3 - KUOU STREAM BRIDGE
9'-0" x 8'-0" CONC. BOX CULVERT @ STA. 453 + 87
INDEX & LOCATION PLAN
F.A.I. Proj. No. I-H3-1(50)
KANEOHE I.C. TO HALEKOU I.C.
Scale: As Noted Date: August 1987

SHEET No. S1 OF 35 SHEETS

FED. ROAD DIST. NO.	STATE	FED. AID PROJ. NO.	FISCAL YEAR	SHEET NO.	TOTAL SHEETS
HAWAII	HAW.	I-H3-1(50)	1989	ADD.83	164

CURVE ℄-2
Δ = 21° 39' 58"
R = 3,300 ft.
T = 631.48 ft.
L_c = 1,247.88 ft.

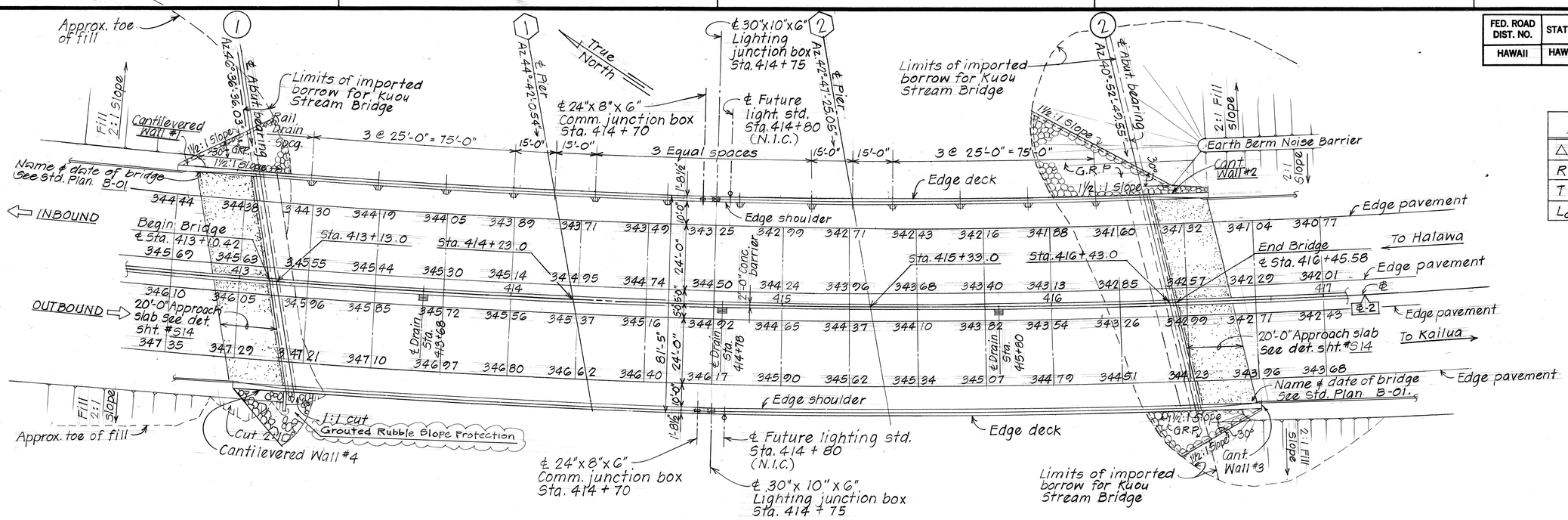

DECK LAYOUT PLAN

Scale: 1" = 20'-0"

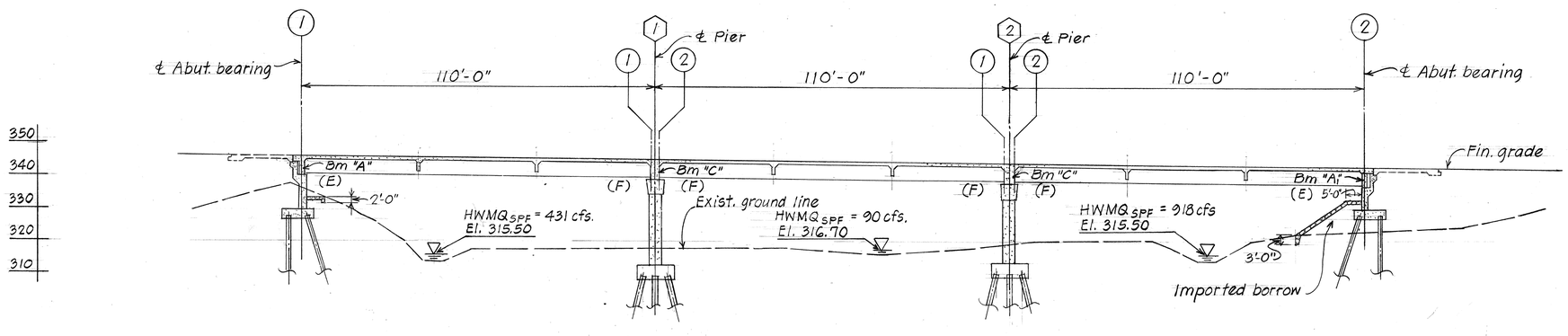

LONGITUDINAL SECTION ALONG ℄

Scale: 1" = 20'-0"

DATE	REVISION
4/20/91	Construct Grouted Rubble Slope Protection (C.O. #43)
3/29/90	Addition of lighting standard & junction boxes.
3/2/89	Revised Curve Data

STATE OF HAWAII
DEPARTMENT OF TRANSPORTATION
LAND TRANSPORTATION FACILITIES DIVISION

KUOU STREAM BRIDGE
LAYOUT PLAN
LONGITUDINAL DECK SECTION

F.A.I. Proj. No. I-H3-1(50)
KANEOHE I.C. TO HALEKOU I.C.

Scale: As Noted — Date: August 1987

SHEET No. 52 OF 35 SHEETS

ORIGINAL PLAN			DATE
	SURVEY PLOTTED BY		
	DRAWN BY	J.N.Y. & L.M.A.	7/83
	TRACED BY	" " "	7/83
NOTE BOOK	DESIGNED BY	D.C.O., S.A.	7/83
	QUANTITIES BY	J.M.	7/83
No.	CHECKED BY	D.C.O.	7/83

"AS BUILT"

C.O. ADD.83

FED. ROAD DIST. NO.	STATE	FED. AID PROJ. NO.	FISCAL YEAR	SHEET NO.	TOTAL SHEETS
HAWAII	HAW.	I-H3-1(50)	1989	ADD.84	164

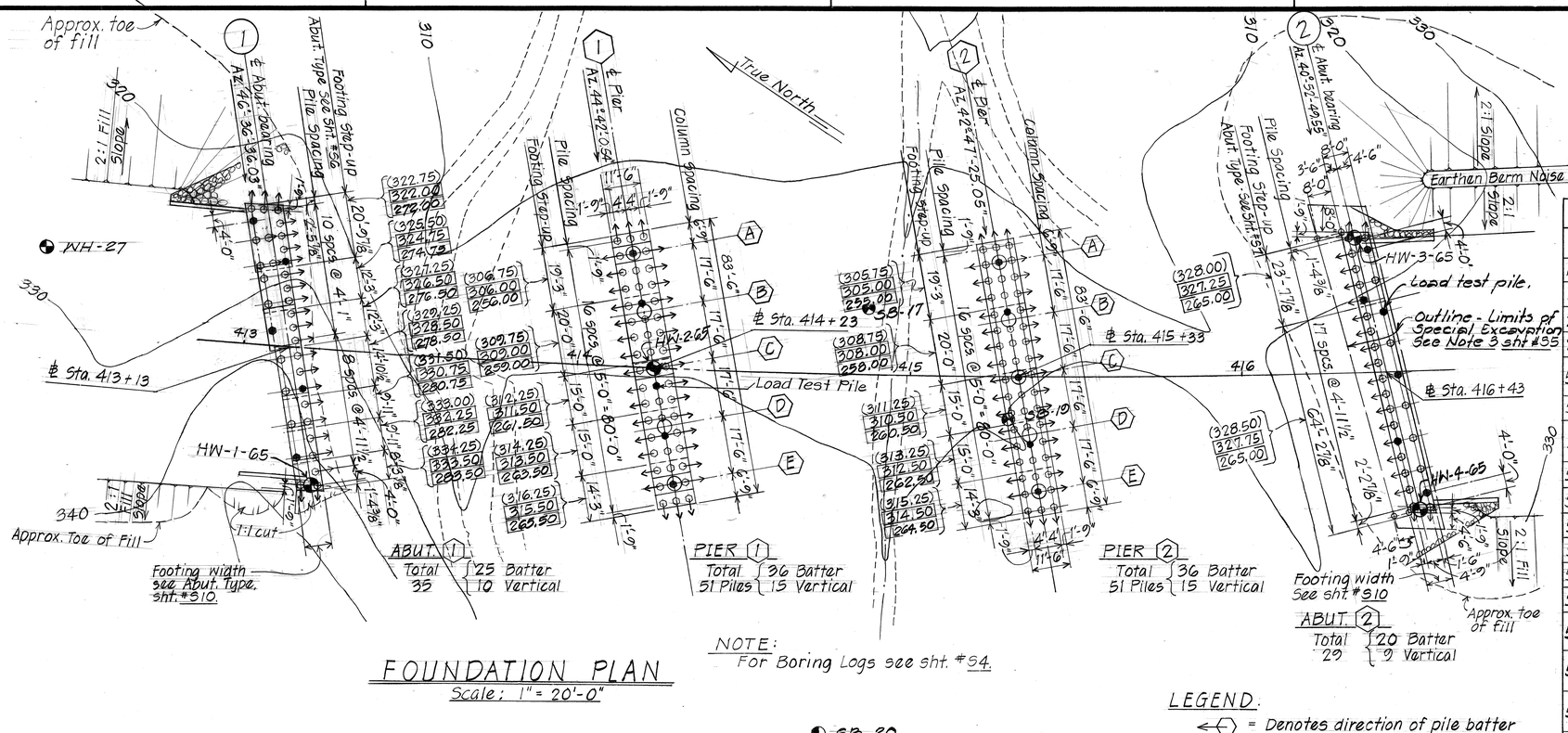

FOUNDATION PLAN

Scale: 1" = 20'-0"

NOTE:
For Boring Logs see sht. #S4.

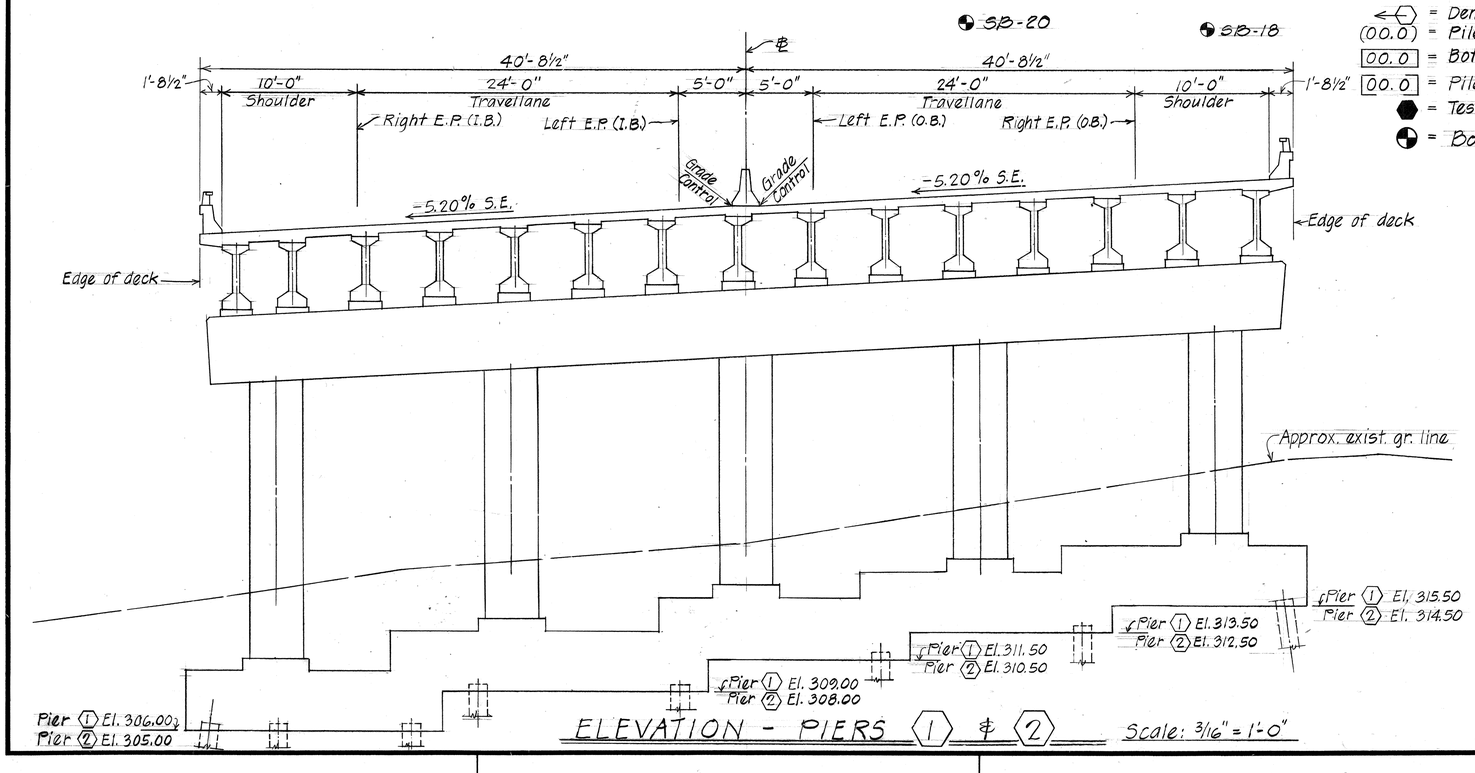

ELEVATION - PIERS 1 & 2

Scale: 3/16" = 1'-0"

LEGEND:

- ⬡ = Denotes direction of pile batter
- (00.0) = Pile cut-off elevation
- 00.0 = Bottom footing elevation
- [00.0] = Pile tip elevation
- ⬢ = Test piles
- ◐ = Boring

ESTIMATED QUANTITIES

KUOU STREAM BRIDGE

ITEM NO.	ITEM	UNIT	QUANTITIES
206.6000	Structure Excavation for Bridges	Cu. Yd.	1,348 C.Y.
206.7010	Structural Backfill for Bridges.	Cu. Yd.	448 C.Y.
206.8200	Filter Material for Structures.	Cu. Yd.	66 C.Y.
503.1092	Concrete in Kuou Stream Bridge (Except Footing)	Lump Sum	1,215 C.Y.
503.1095	Concrete in Footings for Kuou Stream Bridge	Lump Sum	503 C.Y.
503.1910	Concrete in Approach Slab for Kuou Stream Bridge	Lump Sum	138 C.Y.
504.4500	Keahi Type IV Prestressed Concrete Girders	Lump Sum	4,950 L.F.
505.0020	Test Piles, Driven	Lin. Ft.	1,134 L.F.
505.0310	Precast Prestressed Concrete Piles, Furnished	Lin. Ft	9,497 L.F.
505.3100	Precast Prestressed Concrete Piles, Driven	Lin. Ft.	7,390 L.F.
505.6100	Drilled Holes in Embankment for Piles	Lin. Ft.	314 L.F.
505.9000	Extensions or 'Build-Ups' of Piles	F. A.	—
505.0001	Pile Driving Equipment Expense (Not to Exceed $8,000)	Lump Sum	—
507.1001	Metal Bridge Railing - One Rail on Parapet Kuou Stream Bridge	Lin. Ft.	680 L.F.
507.7001	Concrete Bridge Parapet - Including End Post Kuou Stream Bridge	Lin. Ft.	759 L.F.
507.7601	Bridge Concrete Median Barrier Kuou Stream Bridge	Lin. Ft	335 L.F.
602.0091	Reinforcing Steel in Kuou Stream Bridge	Lump Sum	501,000 LBS.
602.0910	Reinforcing Steel in Approach Slab for Kuou Stream Bridge	Lump Sum	54,275 LBS.
612.0201	Grouted Rubble Slope Protection Kuou Stream Bridge	Cu. Yd.	203 C.Y.
634.0100	Exploratory Work at Structure Footings	F. A.	—
203.0218	Imported Borrow for Kuou Stream Bridge	Cu. Yd.	1,056 C.Y.
505.0010	Pile Load Tests	Each	2 Ea.
505.9100	Retapping of Piles	F. A.	—
505.9200	Repair or Replacement of Engineer's Equipment	F. A.	—
505.9300	Dynamic Instrumentation and Testing for Pile Acceptance	F. A.	—

DATE	REVISION
3/2/89	Added additional Load Test Pile

STATE OF HAWAII
DEPARTMENT OF TRANSPORTATION
LAND TRANSPORTATION FACILITIES DIVISION

KUOU STREAM BRIDGE
FOUNDATION PLAN, ELEV. PIER 1 & 2
ESTIMATED QUANTITIES

F.A.I. Proj. No. I-H3-1(50)
KANEOHE I.C. TO HALEKOU I.C.

Scale: As Noted — Date: August 1987

SHEET No. S3 OF 35 SHEETS

ORIGINAL PLAN		
NOTE BOOK	SURVEY PLOTTED BY	DATE
	DRAWN BY J.W.A., L.M.A. & G.U.	7/83
	TRACED BY	" "
	DESIGNED BY D.C.O. & D.W.	7/83
	QUANTITIES BY T.M.	7/83
No.	CHECKED BY D.C.O.	7/83

ADD.84

~~108~~ 84

FED. ROAD DIST. NO.	STATE	FED. AID PROJ. NO.	FISCAL YEAR	SHEET NO.	TOTAL SHEETS
HAWAII	HAW.	I-H3-1(50)	1989	85	164

GENERAL STRUCTURAL NOTES

DESIGN SPECIFICATIONS:

AASHTO, Standard Specifications for Highway Bridges (13th edition), including Interim Specifications

DESIGN LIVE LOAD:

HS-20-44 or Interstate Loading

ALLOWABLE DESIGN STRESSES:

1. Reinforced concrete: $f_c = 0.40\ f'c$
2. Reinforcing steel: f_s = 20,000 psi for Grade 40, 24,000 psi for Grade 60
3. Prestressed concrete: see Design Specifications.
4. Prestressed concrete piles: see Standard Plans B-12, B-13
5. Pile Design Load: 75 tons - Precast (Friction Piles)

MATERIALS:

1. Reinforced concrete - 5,000 psi (pier columns)
   - Class BD (for bridge deck on girders and approach slabs)
   - Class A (all others)
2. Reinforcing steel - ASTM A615, Grade 40 or Grade 60
3. Prestressed concrete - see sht. #517 & #520.
4. Prestressed concrete piles - see Standard Plans
5. Admixture in concrete - see Special Provisions

CONSTRUCTION METHODS:

1. Refer to Standard Specifications for Road and Bridge Construction, 1985 Edition and Special Provisions.
2. In general, top of concrete deck of superstructure shall be constructed to follow the finish roadway vertical and horizontal curves and grades. See Highway Plans.
3. The Contractor shall verify all grades and dimensions before commencing with any work.
4. For concrete finish, see Special Provisions. Girder concrete seats, hinge and creep blocks to be poured monolithically with the supporting structures. Top surfaces of concrete seats to have hard trowel finish.
5. Except as noted otherwise, all vertical dimensions are measured plumb.
6. Abutment footing step-ups for Trail Crossing @ Sta. 454+00 shall be excavated and poured on aggregate subbase material. In case of over-excavation, the space between the footing and the aggregate subbase material shall be filled with concrete at the Contractor's expense and as directed by the Engineer. The minimum quality of the fill concrete shall be Class D.
7. Piles shorter than 100' shall not be spliced.
8. Predrilled holes for piles shall extend 10'-0" below the bottom of Abutment No. 2 footing.

REFERENCE:

1. Refer to Standard Plans B-01 for additional details not covered by detailed and typical drawings.

GENERAL NOTES:

1. All items noted incidental will not be paid for separately.
2. All preformed elastomeric bearing pads and preformed fabric bearing pads shall be secured against displacement with adhesives approved by the Engineer.
3. Except as otherwise noted on plans, all exposed exterior corners 90° or less shall be chamfered 3/4" x 3/4". All exposed exterior corners greater than 90° shall not be chamfered. Round all finish corners 1/4" radius unless noted otherwise.
4. Exact location of bars shall be so arranged so that no interference will occur between vertical column reinforcement and bottom pier cap horizontal reinforcement.
5. All falsework and bracing schemes for all phases of construction shall be prepared by or under the supervision of an engineer who is registered as a structural engineer in the State of Hawaii.

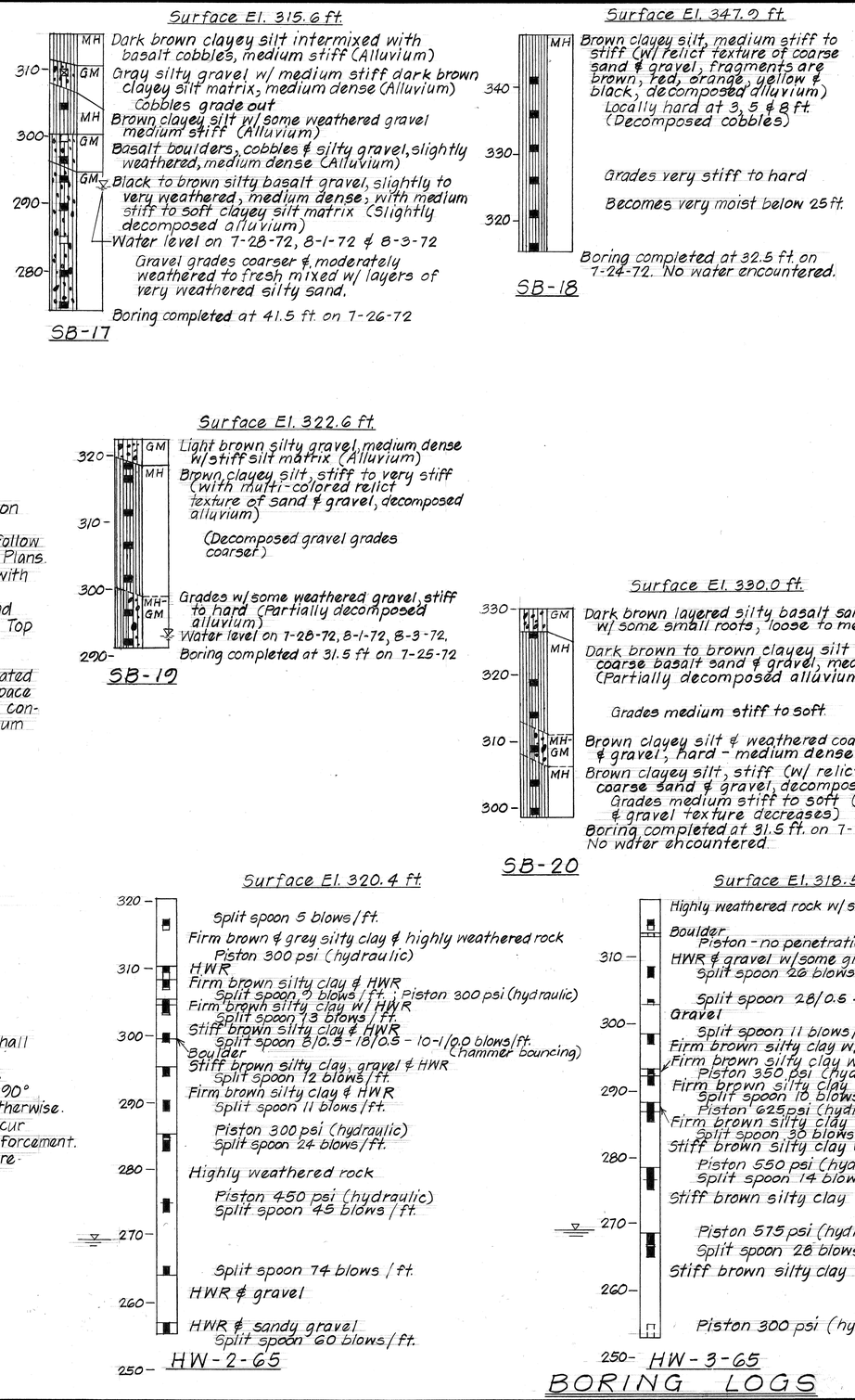

BORING LOGS

ORIGINAL PLAN	SURVEY PLOTTED BY	DATE
	DRAWN BY	10/89
NOTE BOOK	TRACED BY	
	DESIGNED BY	
No.	QUANTITIES BY	
	CHECKED BY	

STATE OF HAWAII
DEPARTMENT OF TRANSPORTATION
LAND TRANSPORTATION FACILITIES DIVISION

ROUTE H3-KUOU STREAM BRIDGE

GENERAL STRUCTURAL NOTES, BORING LOGS

F.A.I. Proj. No. I-H3-1(50)
KANEOHE I.C. TO HALEKOU I.C.

Scale: As Noted — Date: August 1987

SHEET No. 84 OF 35 SHEETS

FED. ROAD DIST. NO.	STATE	FED. AID PROJ. NO.	FISCAL YEAR	SHEET NO.	TOTAL SHEETS
HAWAII	HAW.	I-H3-1(50)	1989	86	164

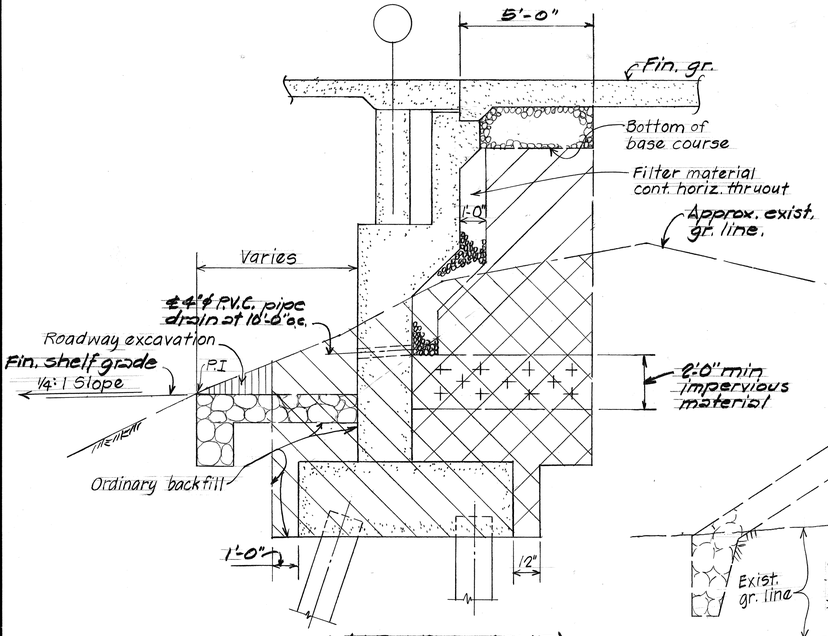

(AT ABUTMENT)
ON GRADE

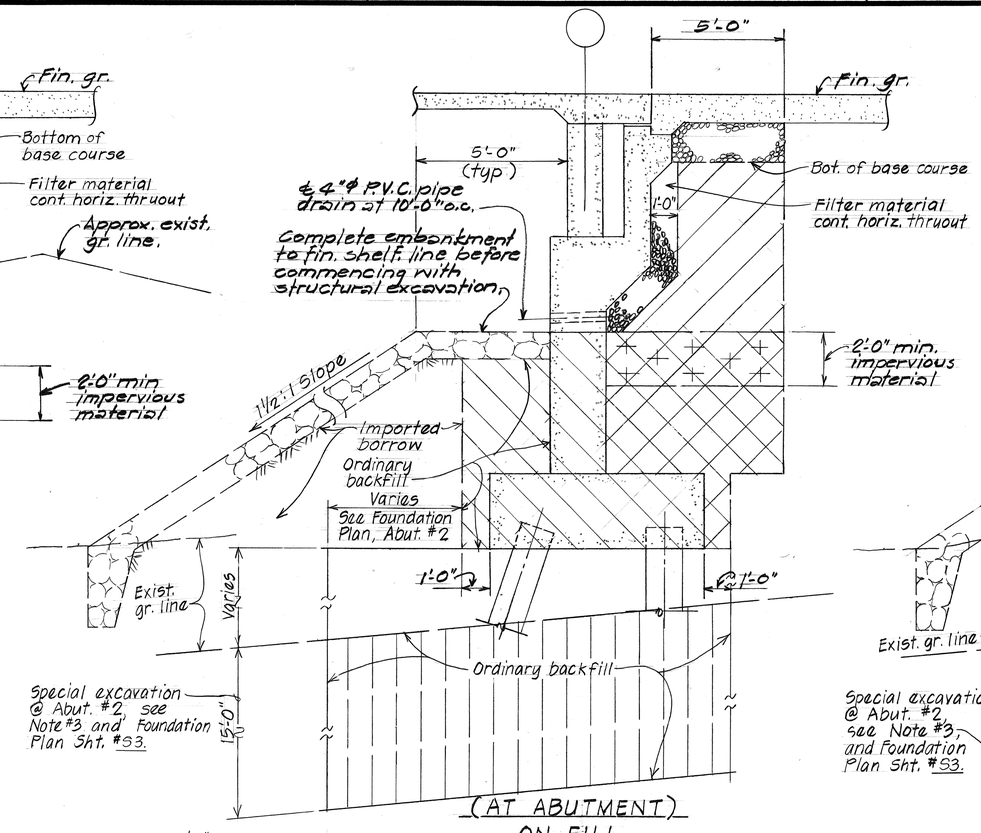

(AT ABUTMENT)
ON FILL

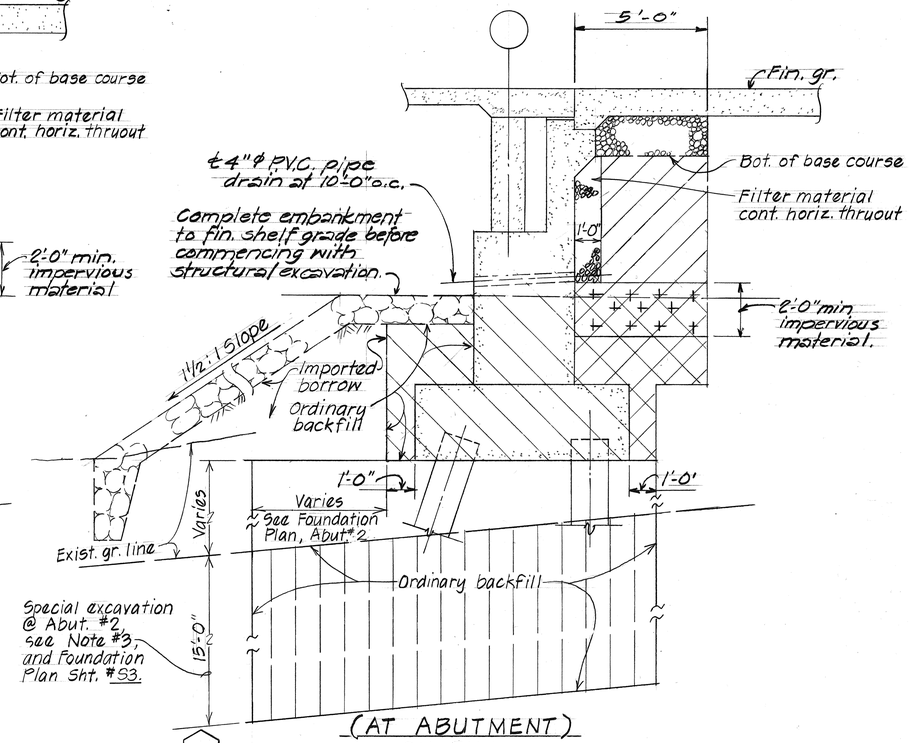

(AT ABUTMENT)
ON FILL

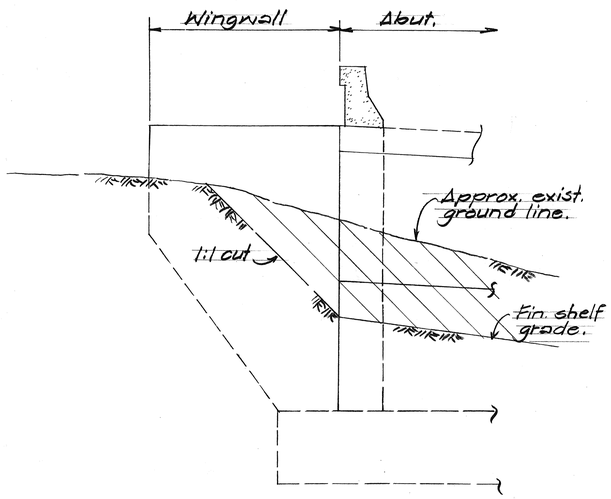

(AT ABUTMENT END)

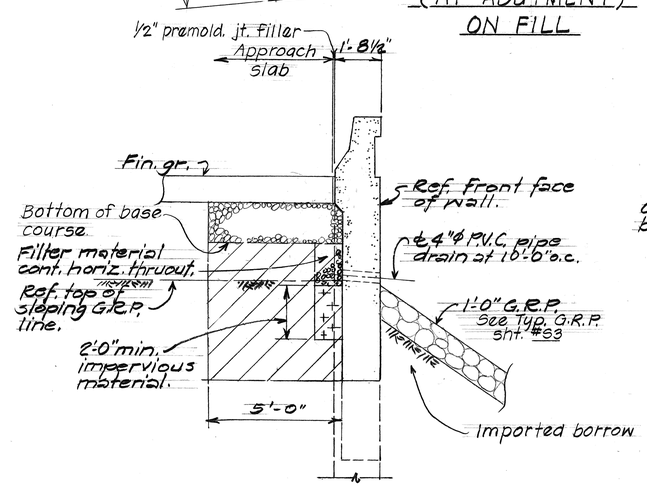

(AT CANTILEVERED WALL)

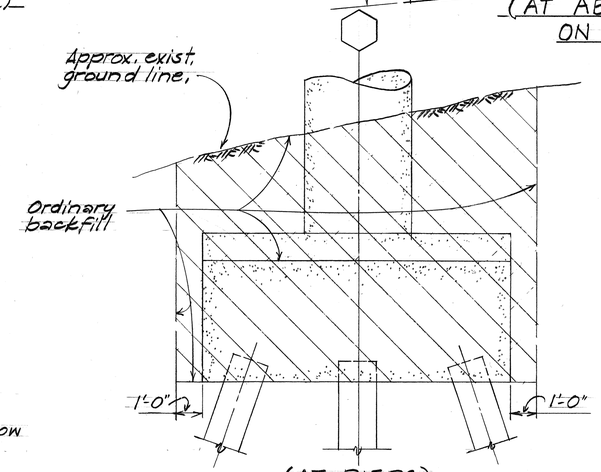

(AT PIERS)

NOTES

1. Hatched area shown thus denotes limits of structure excavation payline. All other excavation shall be roadway excavation.
2. Hatched area shown thus denotes limits of structure backfill.
3. Hatched area shown thus denotes limits of special excavation. Excavate 15'-0" below existing ground. Remove boulders and backfill with compacted fill free of boulders and coarse material. Payment shall be under Pay Item No. 203.0100 "Roadway Excavation" and backfill shall be incidental to this item. This item of work shall be done with Surcharge for consolidation. See sheet 22 for details.

TYPICAL STRUCTURE EXCAVATION AND BACKFILL PAY LIMITS

Not to Scale

ORIGINAL PLAN		DATE
	SURVEY PLOTTED BY	
	DRAWN BY S.Y.	7/83
	TRACED BY	" " 7/83
NOTE BOOK	DESIGNED BY D.C.O.	" " 7/83
	QUANTITIES BY T.M.	" " 7/83
No.	CHECKED BY D.E.O.	" " 7/83

STATE OF HAWAII
DEPARTMENT OF TRANSPORTATION
LAND TRANSPORTATION FACILITIES DIVISION

ROUTE H-3 - KUOU STREAM BRIDGE

TYPICAL ABUTMENT & PIER STRUCTURE EXC. & BACKFILL PAY LIMITS

F.A.I. Proj. No. I-H3-1(50)
KANEOHE I.C. TO HALEKOU I.C.

Scale: As Noted Date: August 1987

SHEET No. 55 OF 35 SHEETS

FED. ROAD DIST. NO.	STATE	FED. AID PROJ. NO.	FISCAL YEAR	SHEET NO.	TOTAL SHEETS
HAWAII	HAW.	I-H3-1(50)	1989	87	164

REFERENCE NOTE:

1.- Bridge deck & superstructure not shown
2.- For conc. seat hinge blk., creep blk. & elastomeric bearing pad dets. see sht. #S20,S23.
3.- For concrete end post detail see Sht. #S27.
4.- For pile spacings and location see Foundation Plan, sht. #S3.
5.- Top Seat El. Schedule sht. #S22.

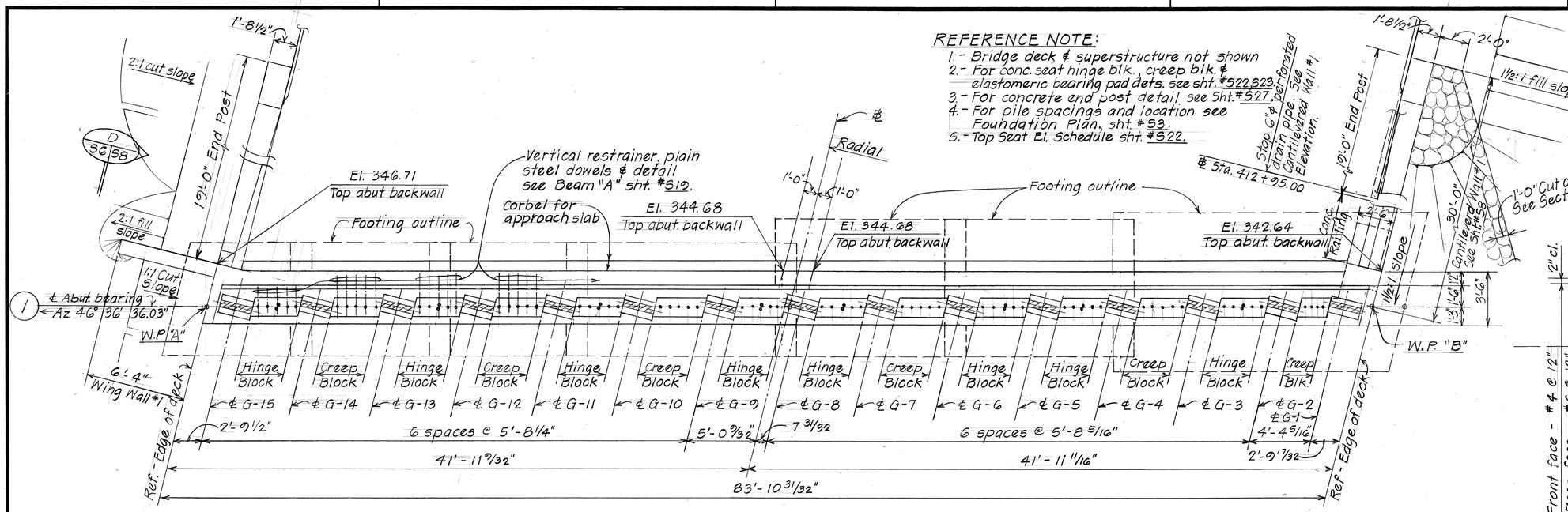

PLAN - ABUTMENT 1 Scale: 1/4" = 1'-0"

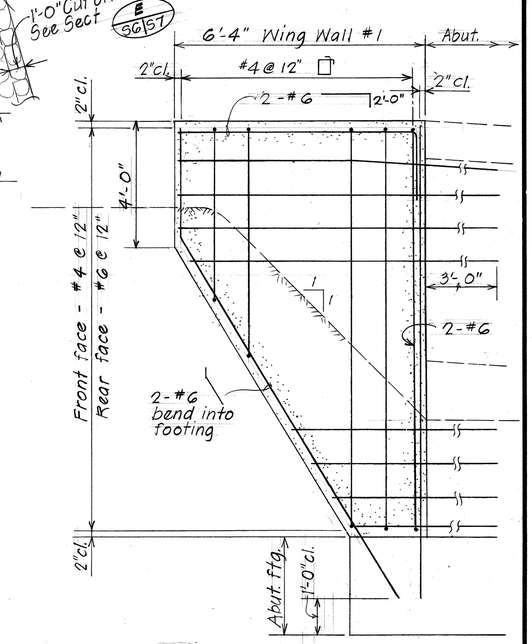

ELEVATION WING WALL #1
Scale: 1/2" = 1'-0"

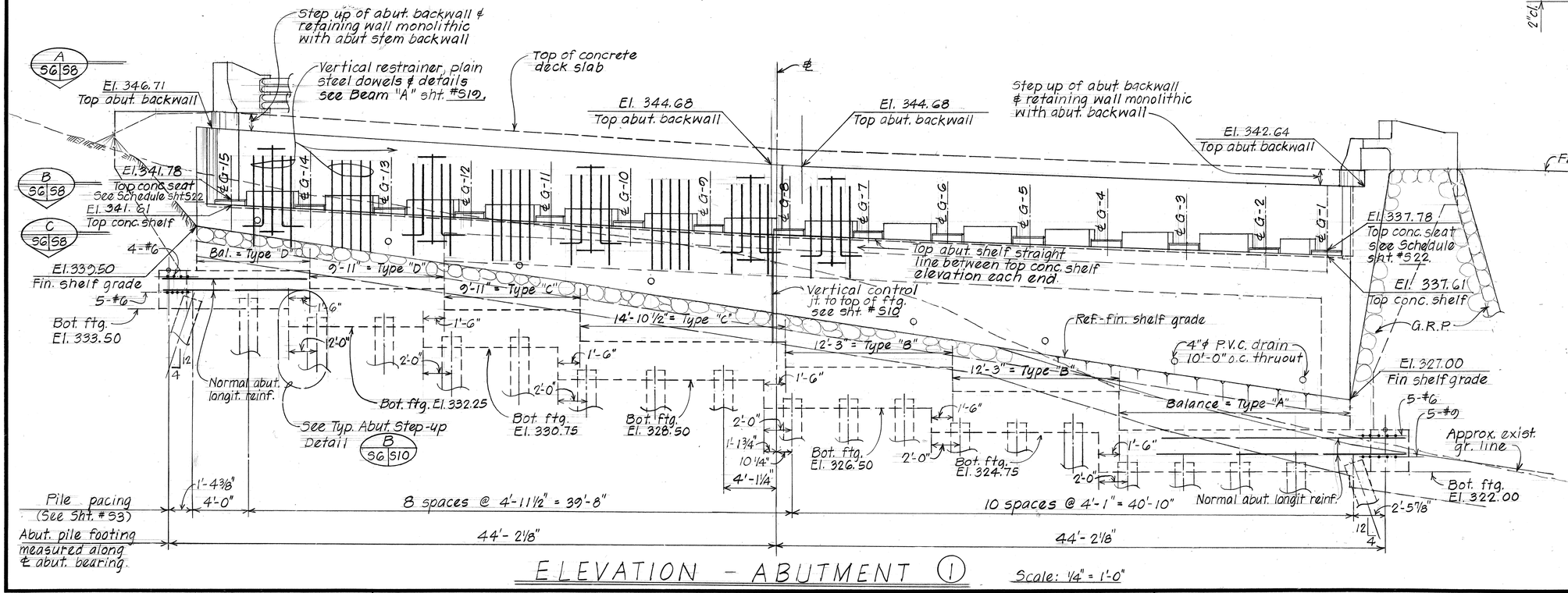

ELEVATION - ABUTMENT 1 Scale: 1/4" = 1'-0"

ORIGINAL PLAN		DATE
	SURVEY PLOTTED BY	
	DRAWN BY	J.A. 7/83
NOTE BOOK	TRACED BY	" 7/83
	DESIGNED BY	D.C.O. 7/83
No.	QUANTITIES BY	J.C.M. 7/83
	CHECKED BY	D.C.O. 7/83

STATE OF HAWAII
DEPARTMENT OF TRANSPORTATION
LAND TRANSPORTATION FACILITIES DIVISION

ROUTE H-3 - KUOU STREAM BRIDGE
ABUTMENT 1 - PLAN & ELEVATION
WING WALL #1

F.A.I. Proj. No. I-H3-1(50)
KANEOHE I.C. TO HALEKOU I.C.

Scale: As Noted Date: August 1987

SHEET NO. S6 OF 35 SHEETS

FED. ROAD DIST. NO.	STATE	FED. AID PROJ. NO.	FISCAL YEAR	SHEET NO.	TOTAL SHEETS
HAWAII	HAW.	I-H3-1(50)	1989	88	164

REFERENCE NOTE:

1.- Bridge deck & superstructure not shown.
2.- For conc. seat hinge blk., creep blk. & elastomeric bearing pad details see sht. #S22, S23
3.- For concrete end post detail see sht #S21.
4.- For pile spacings and location see Foundation Plan, Sht. #S3.
5.- Top Seat El. Schedule sht. #S22.

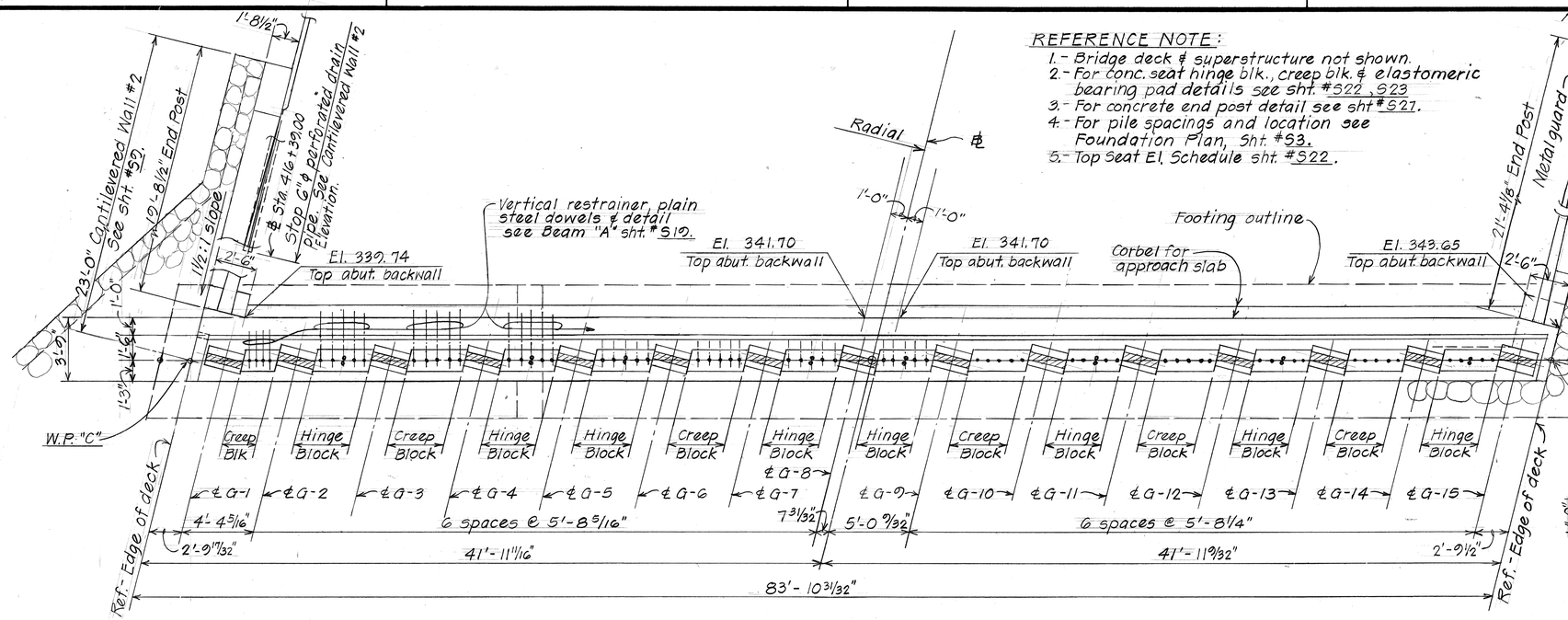

PLAN - ABUTMENT 2

Scale: 1/4" = 1'-0"

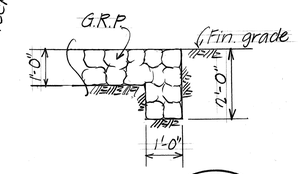

TYP SECT. E S7|S7

(G.R.P. CUT-OFF WALL) S6

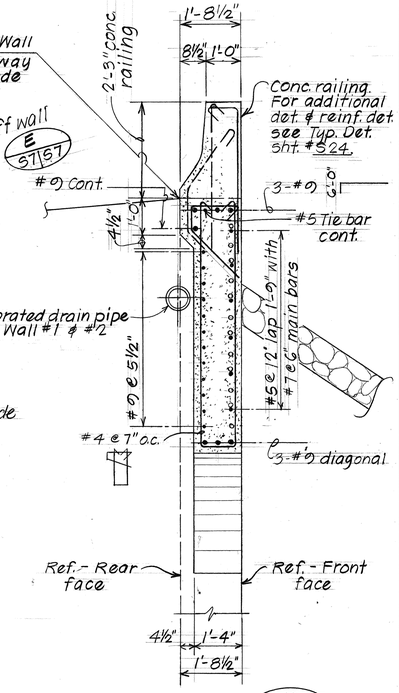

SECTION G S8|S7

Scale: 1/2" = 1'-0"

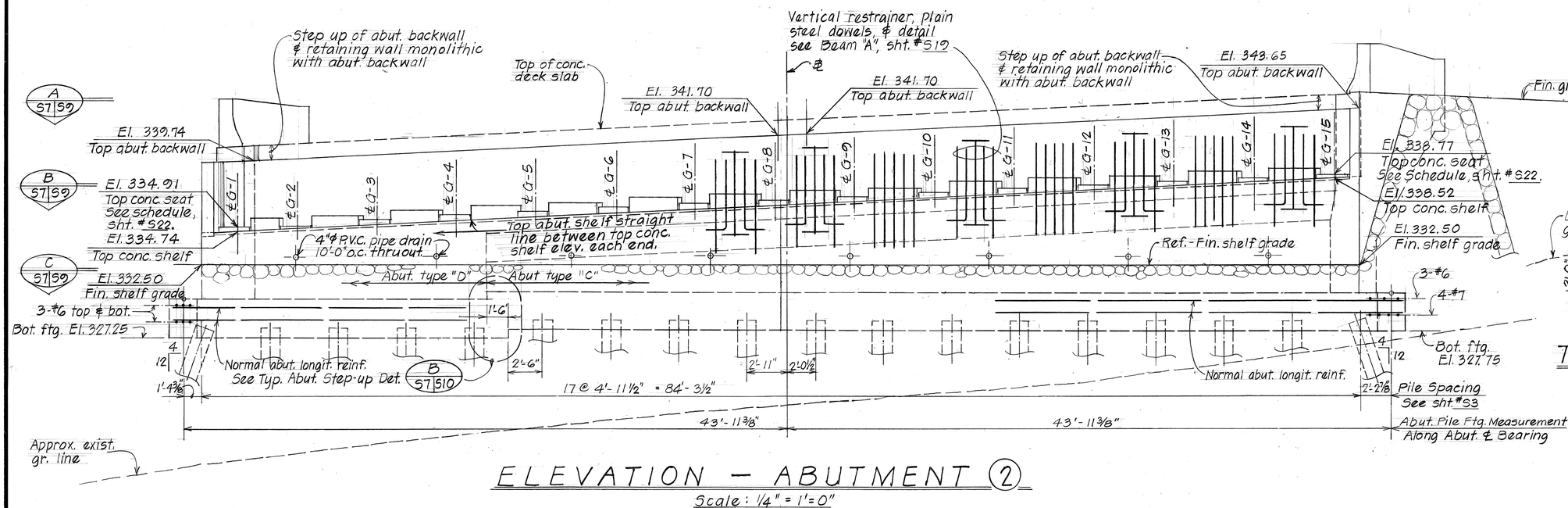

ELEVATION - ABUTMENT 2

Scale: 1/4" = 1'-0"

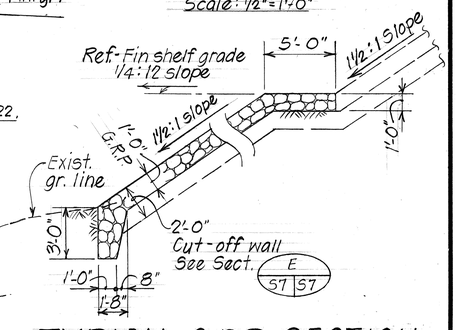

TYPICAL G.R.P. SECTION AT ABUTMENT

Scale: 1/4" = 1'-0"

STATE OF HAWAII
DEPARTMENT OF TRANSPORTATION
LAND TRANSPORTATION FACILITIES DIVISION

ROUTE H-3 - KUOU STREAM BRIDGE

ABUTMENT 2 - PLAN & ELEVATION

F.A.I. Proj. No. I-H3-1(50)
KANEOHE I.C. TO HALEKOU I.C.

Scale: As Noted — Date: August 1987

SHEET No. S7 OF 35 SHEETS

ORIGINAL PLAN	SURVEY PLOTTED BY		DATE
	DRAWN BY	J.P.A.	7/83
	TRACED BY		7/83
NOTE BOOK	DESIGNED BY	D.C.O.	7/83
	QUANTITIES BY	D.C.O.	7/83
No.	CHECKED BY	D.C.O.	7/83

FED. ROAD DIST. NO.	STATE	FED. AID PROJ. NO.	FISCAL YEAR	SHEET NO.	TOTAL SHEETS
HAWAII	HAW.	I-H3-1(50)	1989	ADD.89	164

NOTE:
1. Steel bridge rail not shown.

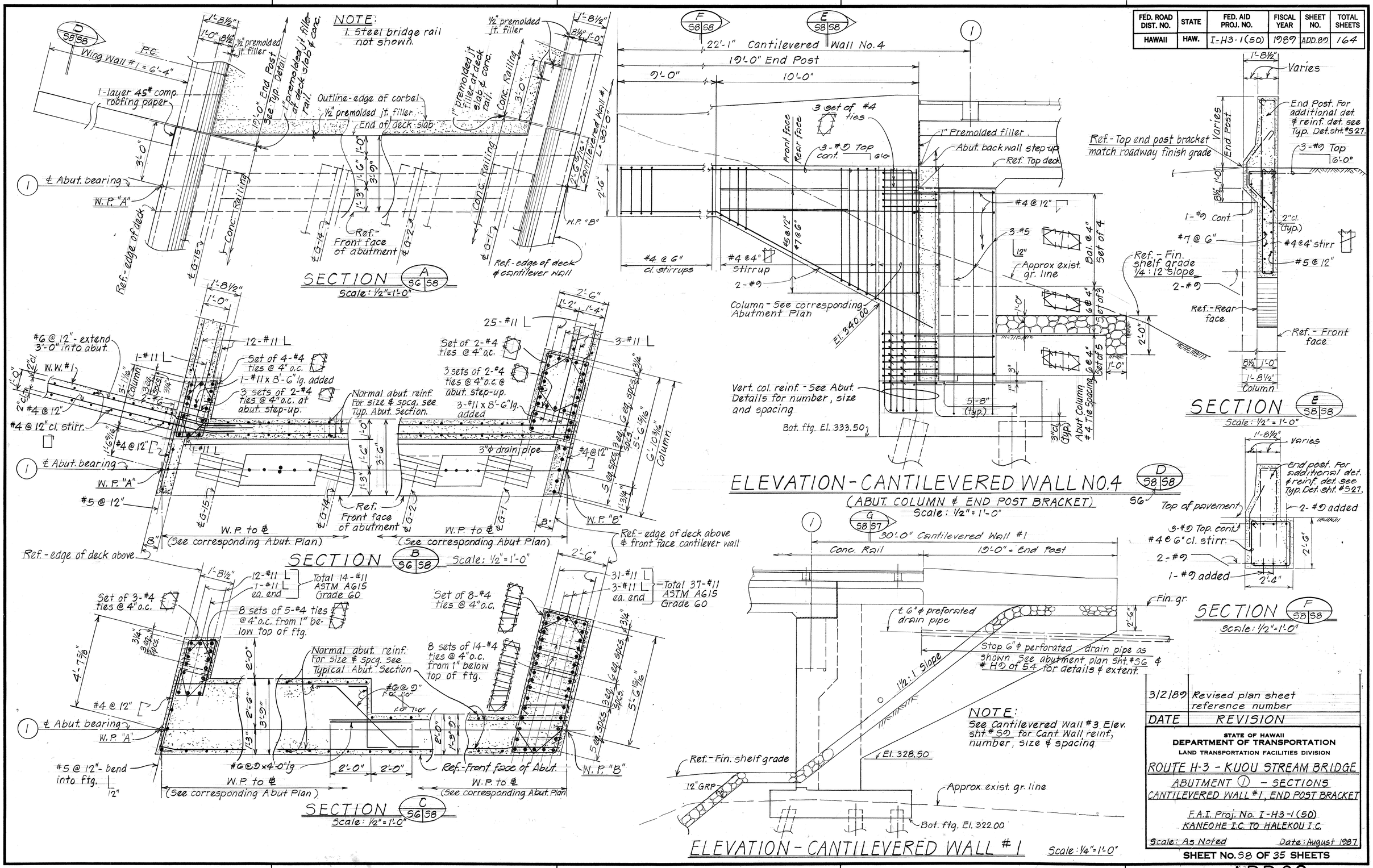

DATE	REVISION
3/2/89	Revised plan sheet reference number

STATE OF HAWAII
DEPARTMENT OF TRANSPORTATION
LAND TRANSPORTATION FACILITIES DIVISION

ROUTE H-3 - KUOU STREAM BRIDGE
ABUTMENT ① - SECTIONS
CANTILEVERED WALL #1, END POST BRACKET

F.A.I. Proj. No. I-H3-1(50)
KANEOHE I.C. TO HALEKOU I.C.

Scale: As Noted — Date: August 1987

SHEET No. 58 OF 35 SHEETS

ORIGINAL PLAN		
SURVEY PLOTTED BY		DATE 7/85
DRAWN BY	J.W.Y. & L.M.A.	" 7/85
TRACED BY		" 7/85
DESIGNED BY	D.C.O.	" 7/85
NOTE BOOK	No.	
QUANTITIES BY	D.C.O.	" 7/85
CHECKED BY	D.C.O.	" 7/85
No.		

ADD.89

87

FED. ROAD DIST. NO.	STATE	FED. AID PROJ. NO.	FISCAL YEAR	SHEET NO.	TOTAL SHEETS
HAWAII	HAW.	I-H3-1(50)	1989	ADD.90	164

NOTE:
1. Steel bridge rail not shown.

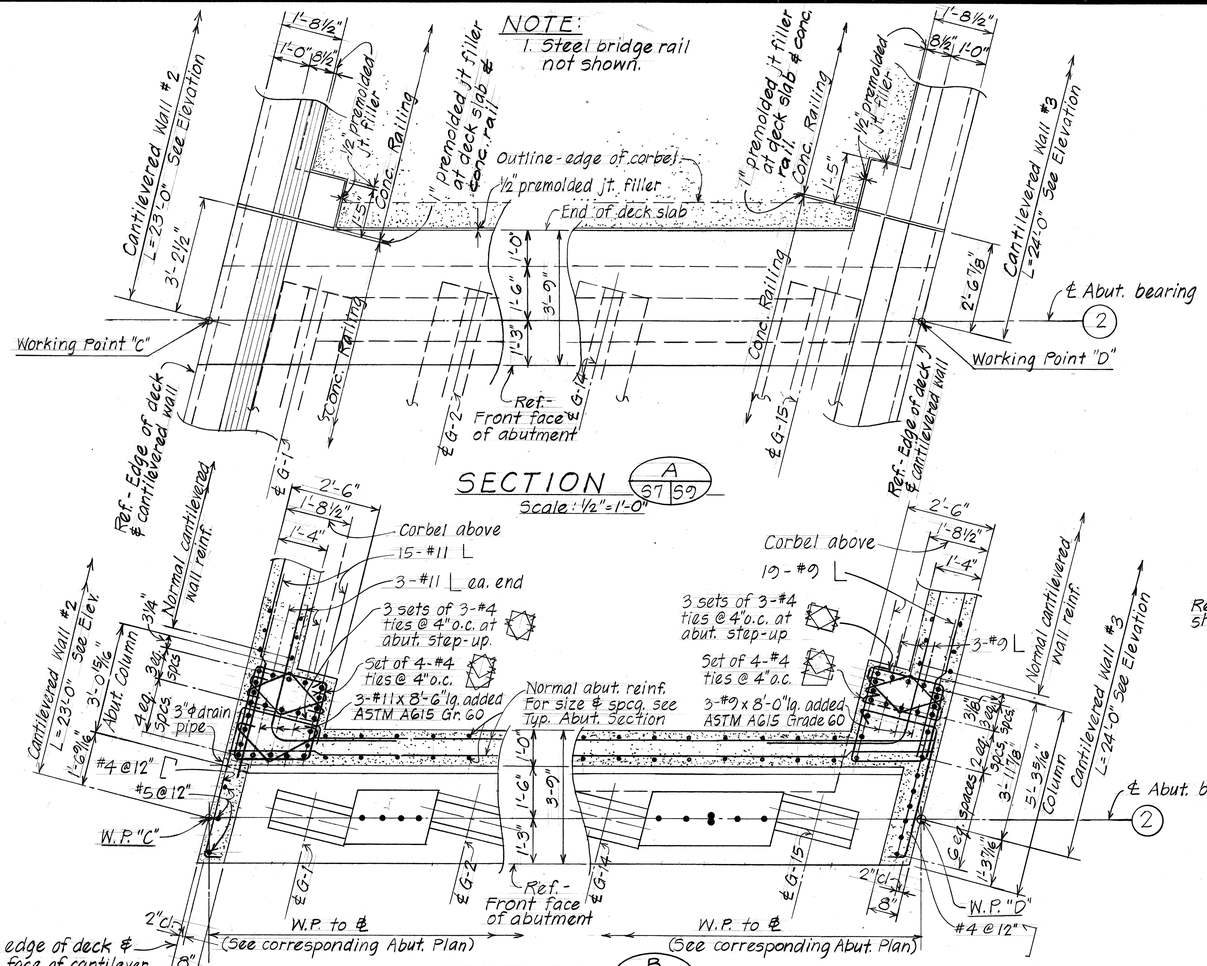

SECTION A (S7 | S9)
Scale: 1/2" = 1'-0"

SECTION B (S7 | S9)
Scale: 1/2" = 1'-0"

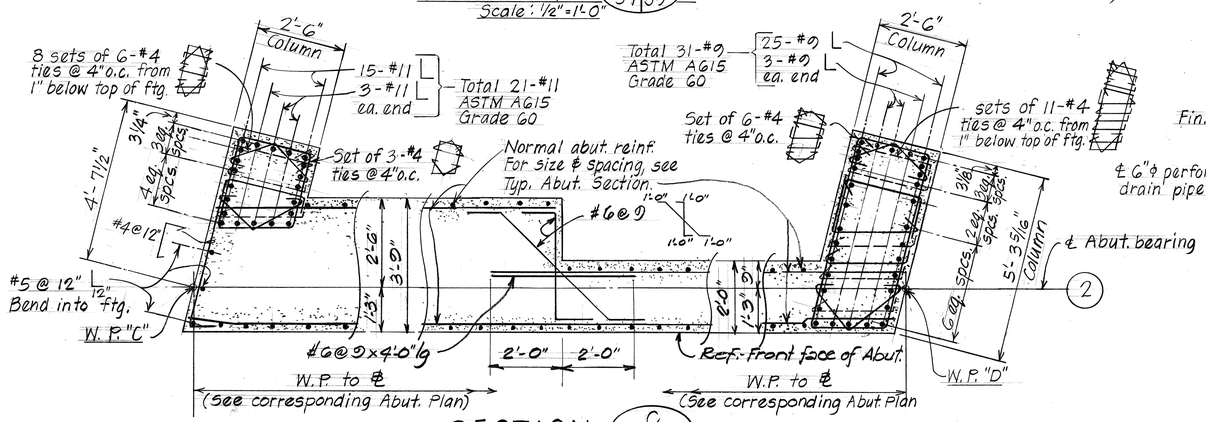

SECTION C (S7 | S9)
Scale: 1/2" = 1'-0"

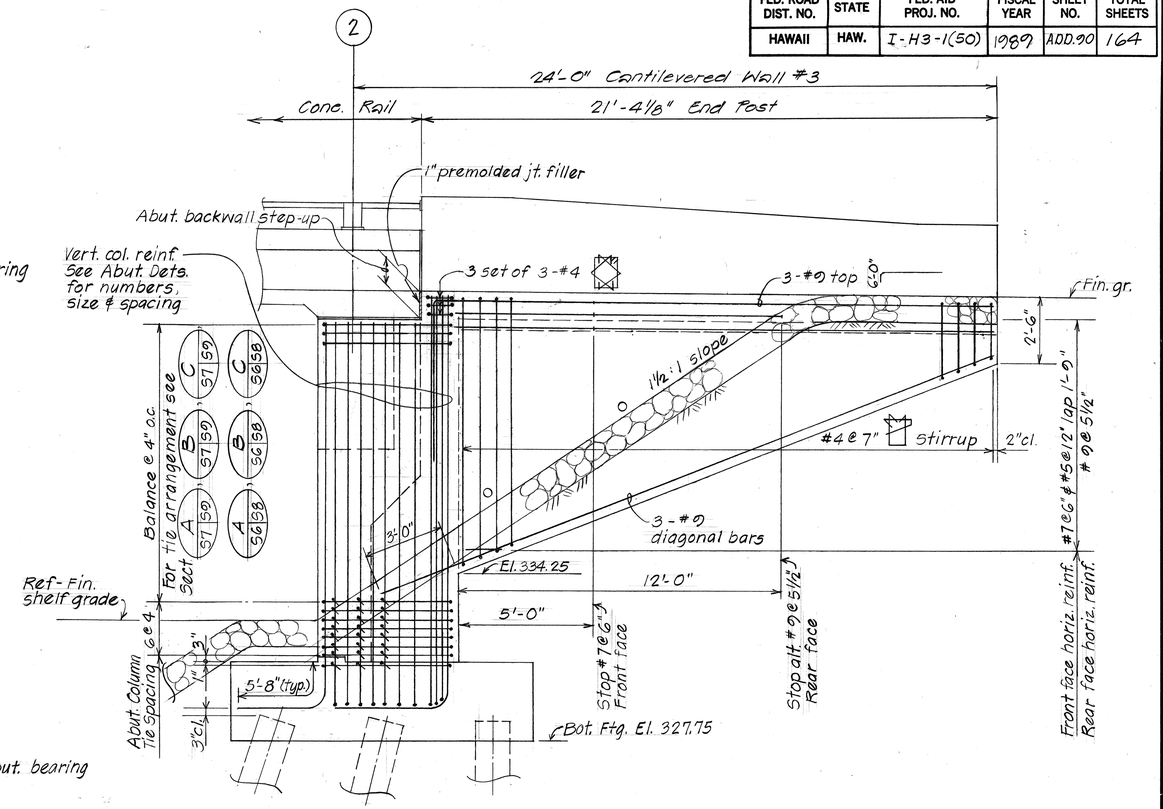

ELEVATION - CANTILEVERED WALL #3
Scale: 3/8" = 1'-0"

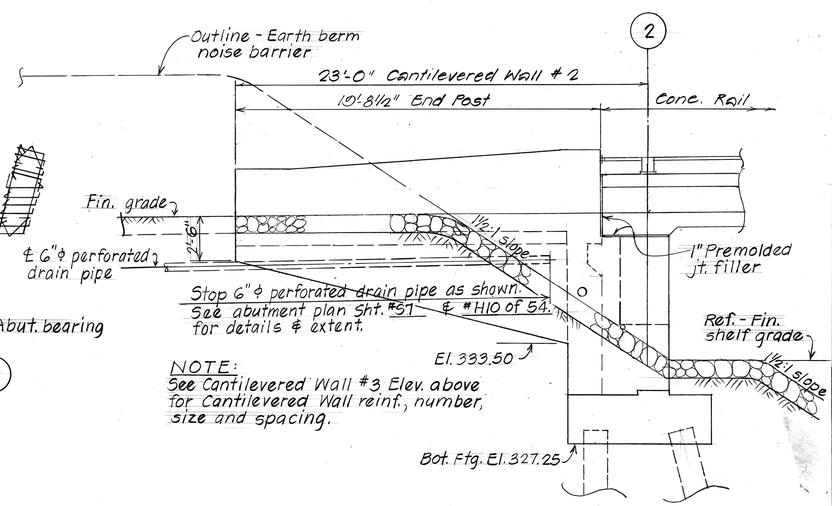

NOTE:
See Cantilevered Wall #3 Elev. above for Cantilevered Wall reinf., number, size and spacing.

ELEVATION - CANTILEVERED WALL #2
Scale: 1/4" = 1'-0"

DATE	REVISION
3/2/89	Revised plan sheet reference number

STATE OF HAWAII
DEPARTMENT OF TRANSPORTATION
LAND TRANSPORTATION FACILITIES DIVISION

ROUTE H-3 - KUOU STREAM BRIDGE
ABUTMENT ② - SECTIONS
CANTILEVERED WALL #2 & #3

F.A.I. Proj. No. I-H3-1(50)
KANEOHE I.C. TO HALEKOU I.C.

Scale: As Noted Date: August 1987

SHEET No. 50 OF 35 SHEETS

ORIGINAL PLAN	SURVEY PLOTTED BY	DATE
	DRAWN BY N.V. & L.M.A.	7/83
	TRACED BY	
NOTE BOOK	DESIGNED BY D.L.O.	7/83
	QUANTITIES BY	7/83
No.	CHECKED BY D.L.O.	7/83

ADD.90

FED. ROAD DIST. NO.	STATE	FED. AID PROJ. NO.	FISCAL YEAR	SHEET NO.	TOTAL SHEETS
HAWAII	HAW.	I-H3-1(50)	1989	91	164

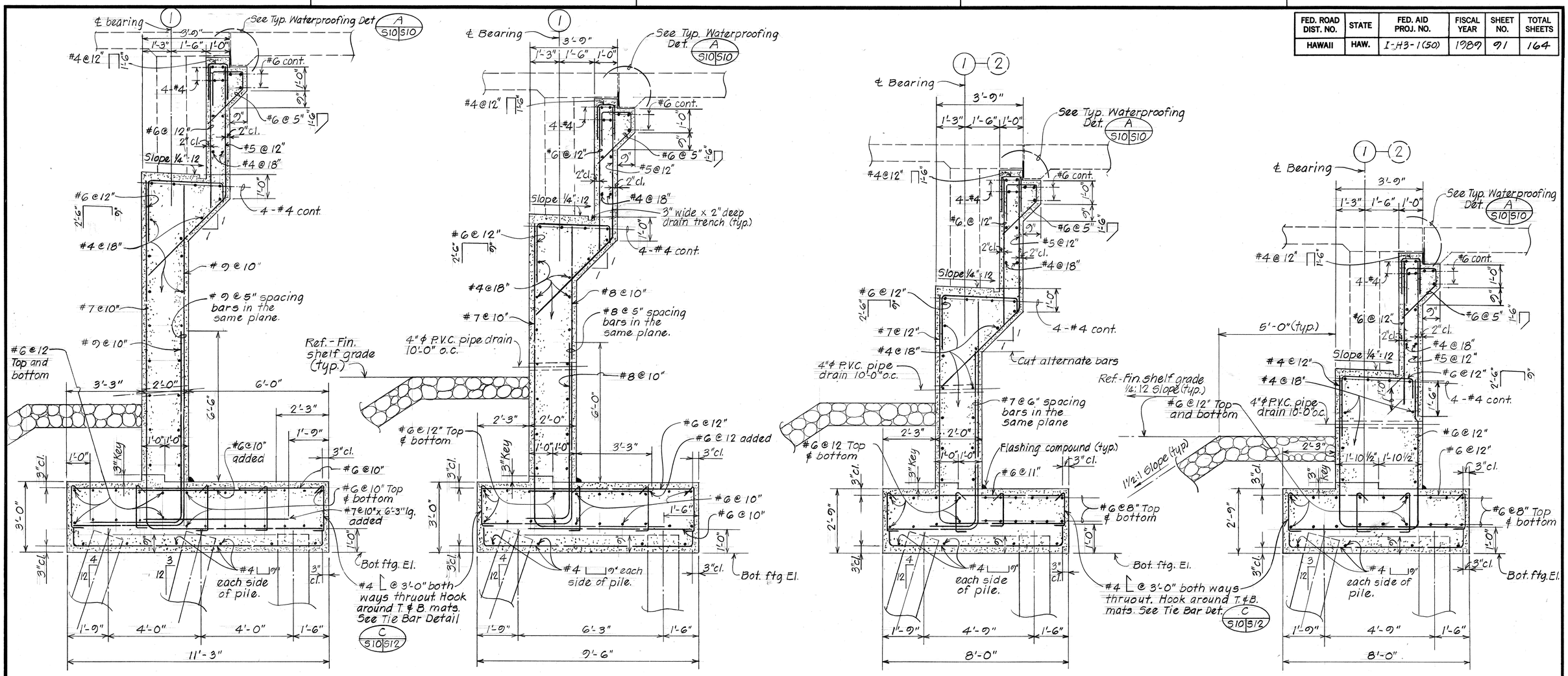

TYPICAL ABUTMENT SECTION

Scale: 1/2" = 1'-0"

NOTE: Waterproofing assemblage incidental to concrete.

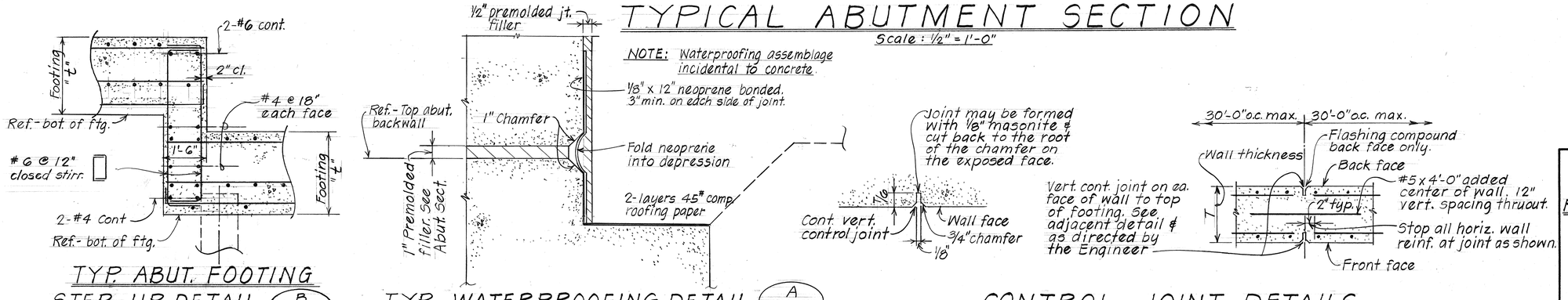

TYP. ABUT. FOOTING STEP-UP DETAIL B S7 S10 S6

Scale: 1/2" = 1'-0"

TYP. WATERPROOFING DETAIL A S10 S10 S14, S19

Not to scale

CONTROL JOINT DETAILS

Not to scale

ORIGINAL PLAN		DATE
	SURVEY PLOTTED BY	
	DRAWN BY	7/83
	TRACED BY	7/83
NOTE BOOK	DESIGNED BY	7/83
	QUANTITIES BY	7/83
No.	CHECKED BY	7/83

STATE OF HAWAII
DEPARTMENT OF TRANSPORTATION
LAND TRANSPORTATION FACILITIES DIVISION

ROUTE H-3 - KUOU STREAM BRIDGE

TYPICAL ABUTMENT SECTIONS
ABUTMENT FOOTING STEP-UP

F.A.I. Proj. No. I-H3-1(50)
KANEOHE I.C. TO HALEKOU I.C.

Scale: As Noted — Date: August 1987

SHEET No. S10 OF 35 SHEETS

FED. ROAD DIST. NO.	STATE	FED. AID PROJ. NO.	FISCAL YEAR	SHEET NO.	TOTAL SHEETS
HAWAII	HAW.	I-H3-1(50)	1989	92	164

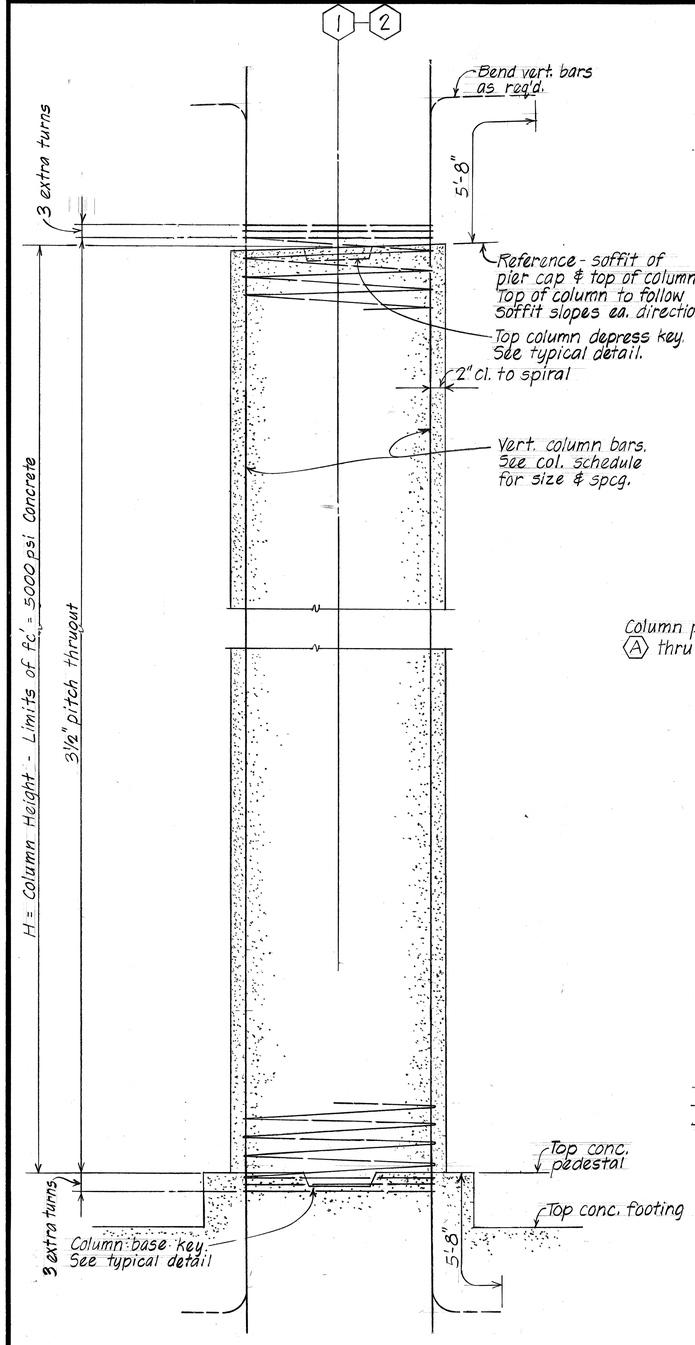

TYPICAL PIER COLUMN DETAIL

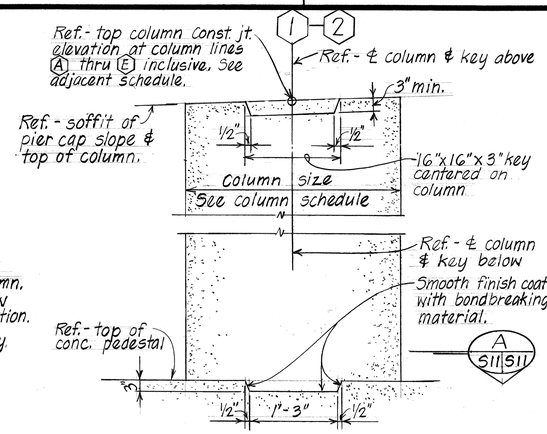

TYPICAL COLUMN KEY DETAIL

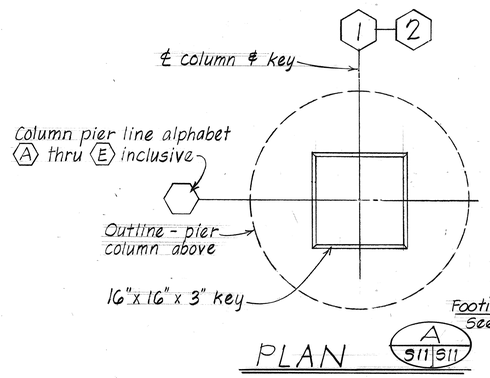

PLAN

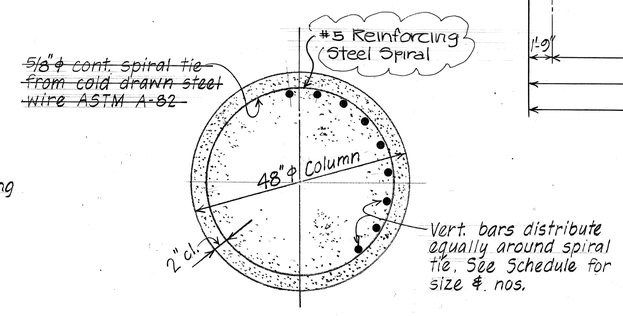

TYPICAL PIER COLUMN SECTION

NOTE: All vertical column reinforcing shall be ASTM A615 Grade 60

PIER COLUMN SCHEDULE

PIER	1					2				
COLUMN ALPHABET / LOCATIONS	(1A)	(1B)	(1C)	(1D)	(1E)	(2A)	(2B)	(2C)	(2D)	(2E)
REFERENCE: TOP COLUMN ELEVATION	332.33	333.21	334.09	334.97	335.85	331.24	332.11	332.97	333.84	334.70
TOP DECK										
TOP COLUMN										
COLUMN SIZE AND VERTICAL REINFORCEMENT	48" dia. column 28 - #11 cont.	48" dia. column 20 - #11 cont.	48" dia. column 20 - #11 cont.	48" dia. column 20 - #11 cont.	48" dia. column 28 - #11 cont.	48" dia. column 28 - #11 cont.	48" dia. column 20 - #11 cont.	48" dia. column 20 - #11 cont.	48" dia. column 20 - #11 cont.	48" dia. column 28 - #11 cont.
TOP COLUMN PEDESTAL										
COLUMN PEDESTAL SIZE	5'-0"x 11'-6"	5'-0"x 11'-6"	5'-0"x 11'-6"	5'-0"x 11'-6"	5'-0"x 11'-6"	5'-0"x 11'-6"	5'-0"x 11'-6"	5'-0"x 11'-6"	5'-0"x 11'-6"	5'-0"x 4'-6"
COLUMN PEDESTAL DEPTH	12"	12"	12"	12"	12"	12"	12"	12"	12"	12"
FOOTING SIZE	See Plan below					See Plan below				
BOTTOM FOOTING ELEVATION	See Foundation Plan sht. S3					See Foundation Plan sht. S3				
GROUP LOADING	Group VII					Group VII				

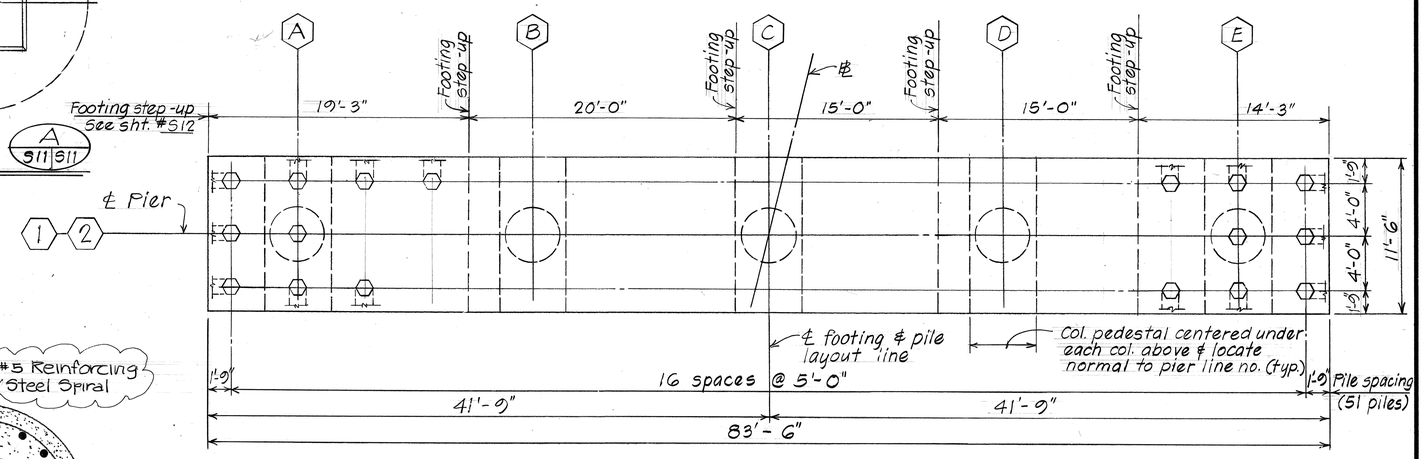

PLAN - TYPICAL CONTINUOUS PILE FOOTING

PIERS (1) & (2) Scale: 3/16"=1'-0"

ORIGINAL PLAN		
NOTE BOOK	SURVEY PLOTTED BY	DATE
	DRAWN BY N.N.	7/83
	TRACED BY "	" 7/83
	DESIGNED BY D.C.O.	" 7/83
	QUANTITIES BY T.M.	" 7/83
No.	CHECKED BY D.L.O.	" 7/83

STATE OF HAWAII
DEPARTMENT OF TRANSPORTATION
LAND TRANSPORTATION FACILITIES DIVISION

ROUTE H-3 - KUOU STREAM BRIDGE

PIER COLUMN DETAIL
PIER COLUMN PILE FOOTING PLAN

F.A.I. Proj. No. I-H3-1(50)
KANEOHE I.C. TO HALEKOU I.C.

Scale: As Noted Date: August 1987

SHEET No. S11 OF 35 SHEETS

"AS BUILT"

92

92

FED. ROAD DIST. NO.	STATE	FED. AID PROJ. NO.	FISCAL YEAR	SHEET NO.	TOTAL SHEETS
HAWAII	HAW.	I-H3-1(50)	1989	93	164

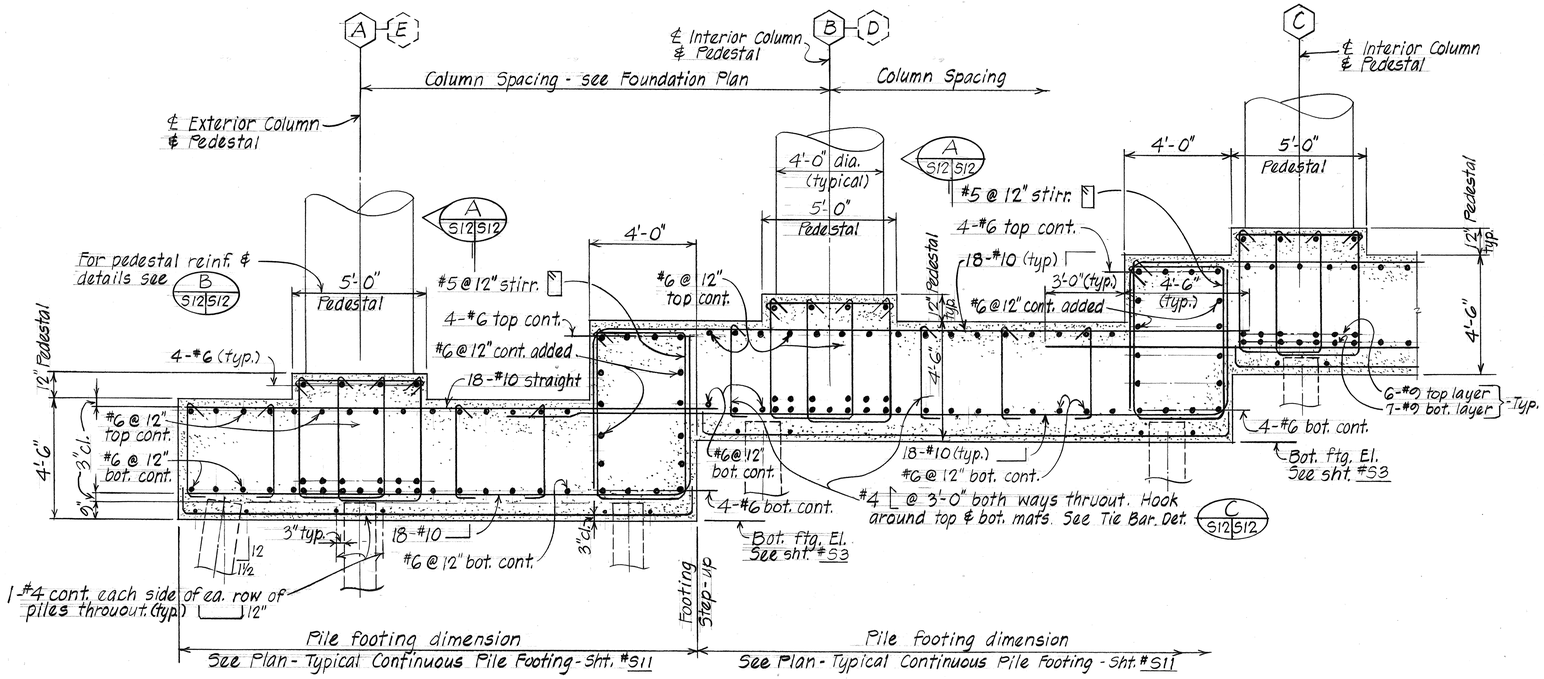

AT EXTERIOR COLUMN (A) AS SHOWN
COLUMN (E) SIMILAR EXCEPT OPPOSITE END

AT INTERIOR COLUMN (B) AS SHOWN
COLUMN (D) SIMILAR EXCEPT AS OTHERWISE NOTED

TYPICAL PIER COLUMN CONTINUOUS PILE FOOTING REINFORCEMENT DETAILS

Scale: 3/8" = 1'-0"

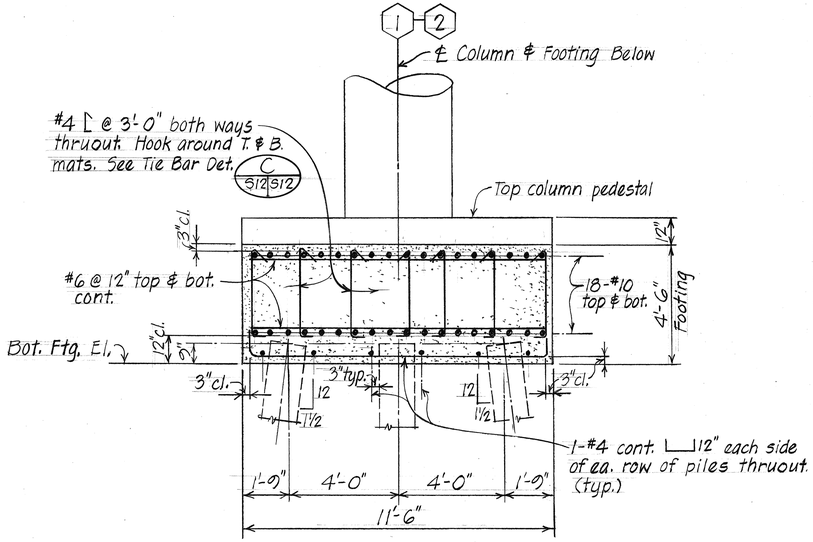

TYPICAL SECTION A S12 S12

Scale: 3/8" = 1'-0"

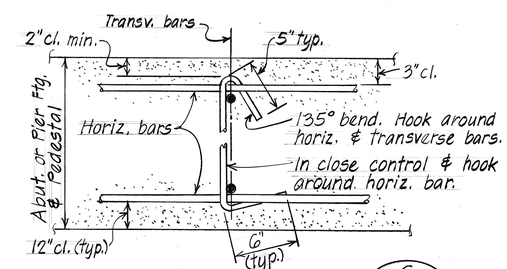

TIE BAR DETAIL C S12 S12

Not to Scale

S10

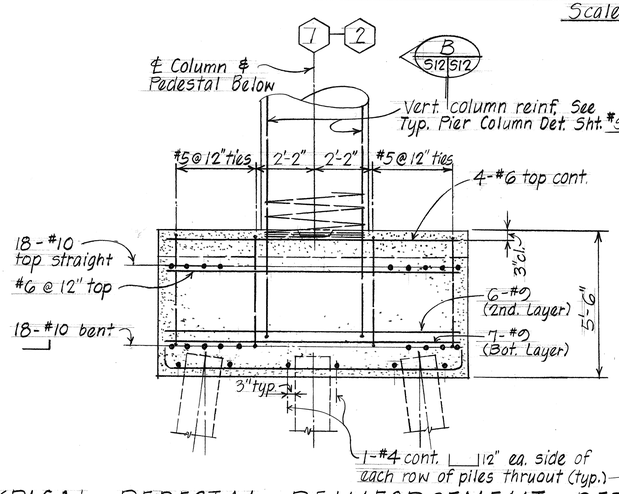

TYPICAL PEDESTAL REINFORCEMENT DETAIL

Scale: 3/8" = 1'-0"

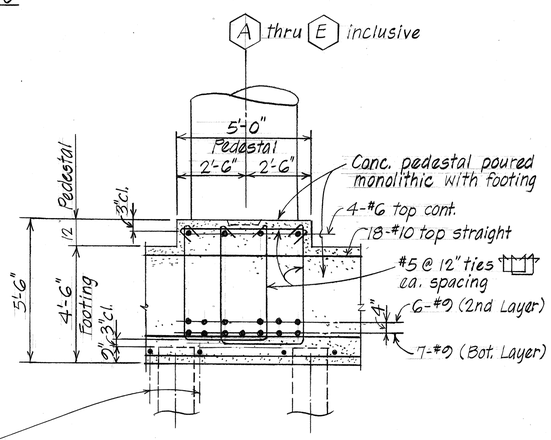

SECTION B S12 S12

Scale: 3/8" = 1'-0"

ORIGINAL PLAN		SURVEY PLOTTED BY		DATE
		DRAWN BY	A.N.	7/83
		TRACED BY		" "
NOTE BOOK		DESIGNED BY	D.W.	7/83
		QUANTITIES BY	T.M.	7/83
No.		CHECKED BY	D.C.O.	7/83

STATE OF HAWAII
DEPARTMENT OF TRANSPORTATION
LAND TRANSPORTATION FACILITIES DIVISION

ROUTE H-3 - KUOU STREAM BRIDGE

PIER FOOTING SECTIONS

F.A.I. Proj. No. I-H3-1(50)
KANEOHE I.C. TO HALEKOU I.C.

Scale: As Noted Date: August 1987

SHEET No. S12 OF 35 SHEETS

FED. ROAD DIST. NO.	STATE	FED. AID PROJ. NO.	FISCAL YEAR	SHEET NO.	TOTAL SHEETS
HAWAII	HAW.	I-H3-1(50)	1989	94	164

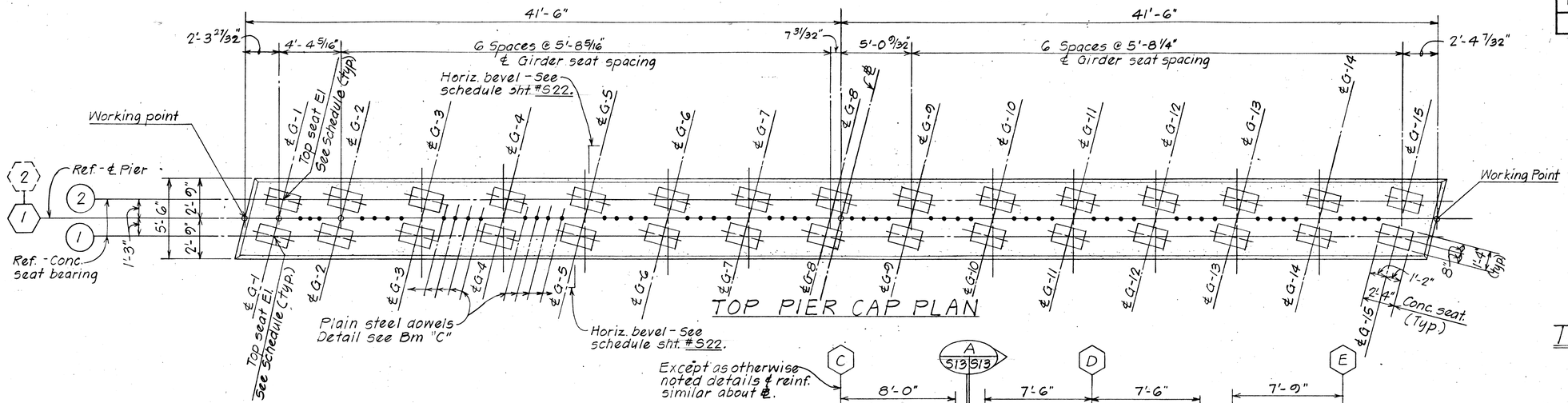

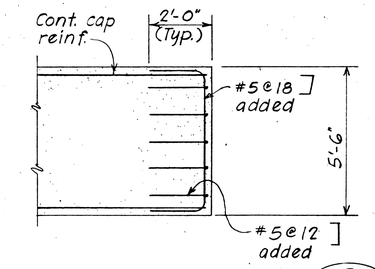

TYPICAL SECTION (B / S13 | S13)

Scale: 3/8" = 1'-0"

Except as otherwise noted details & reinf. similar about ℄.

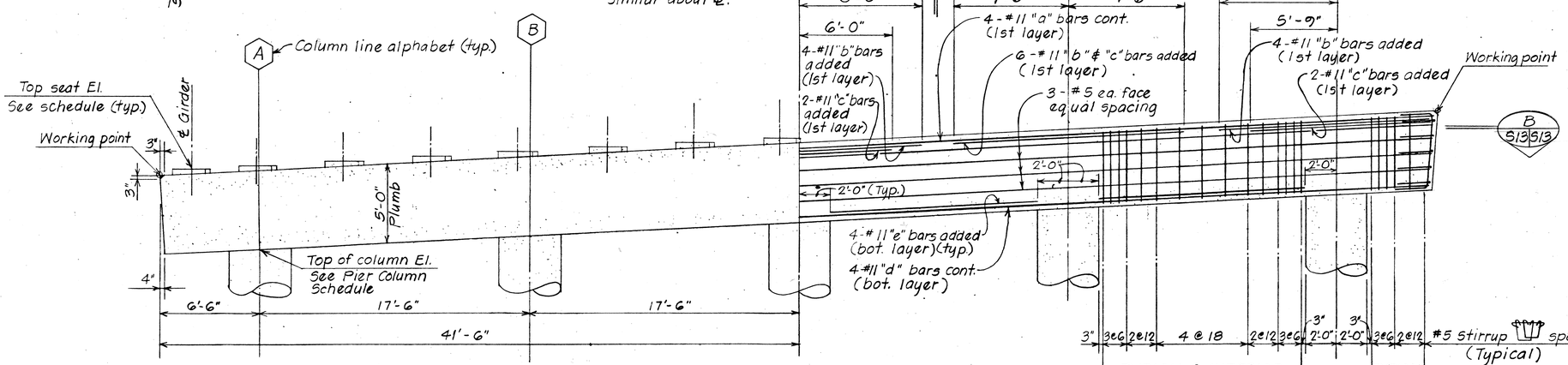

PIER DIMENSION

PIER REINFORCEMENT

PIER CAP ELEVATION

TYPICAL PIER CAP DETAILS

Scale: 1/4" = 1'-0"

REFERENCE NOTES

1. Top Seat El. Schedule sht. #S22.
2. Top Column El. Schedule sht. #S11.
3. Plain Steel Dowel see Beam "C" Det. sht #S20.

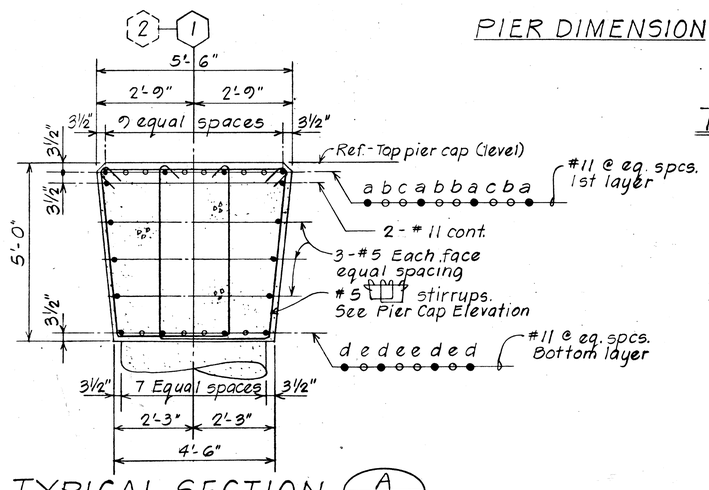

TYPICAL SECTION (A / S13 | S13)

Scale: 1/2" = 1'-0

ORIGINAL PLAN	SURVEY PLOTTED BY	DATE 7/83
	DRAWN BY L.M.A.	" 7/83
NOTE BOOK	TRACED BY D.W.	" 7/83
	DESIGNED BY D.L.A.	" 7/83
No.	QUANTITIES BY	
	CHECKED BY D.C.O.	" 7/83

STATE OF HAWAII
DEPARTMENT OF TRANSPORTATION
LAND TRANSPORTATION FACILITIES DIVISION

ROUTE H-3 - KUOU STREAM BRIDGE

PIER CAP DETAILS & SECTIONS

F.A.I. Proj. No. I-H3-1(50)
KANEOHE I.C. TO HALEKOU I.C.

Scale: As Noted Date: August 1987

SHEET No. S13 OF 35 SHEETS

FED. ROAD DIST. NO.	STATE	FED. AID PROJ. NO.	FISCAL YEAR	SHEET NO.	TOTAL SHEETS
HAWAII	HAW.	I-H3-1(50)	1989	95	164

NOTES:

1. TSS- - Denotes extent of Top Slab Strip (TSS-) between girders each bay. Refer to Typical Deck Slab Sections and corresponding Bar Placement Diagram for size and numbers, on Sht. #S16.
2. Locate Beam "B" as indicated on Plan.
3. Girder dimension L = horizontal measurement between girder ℄ bearing at each end of the girder. The Contractor shall determine total length of girder.

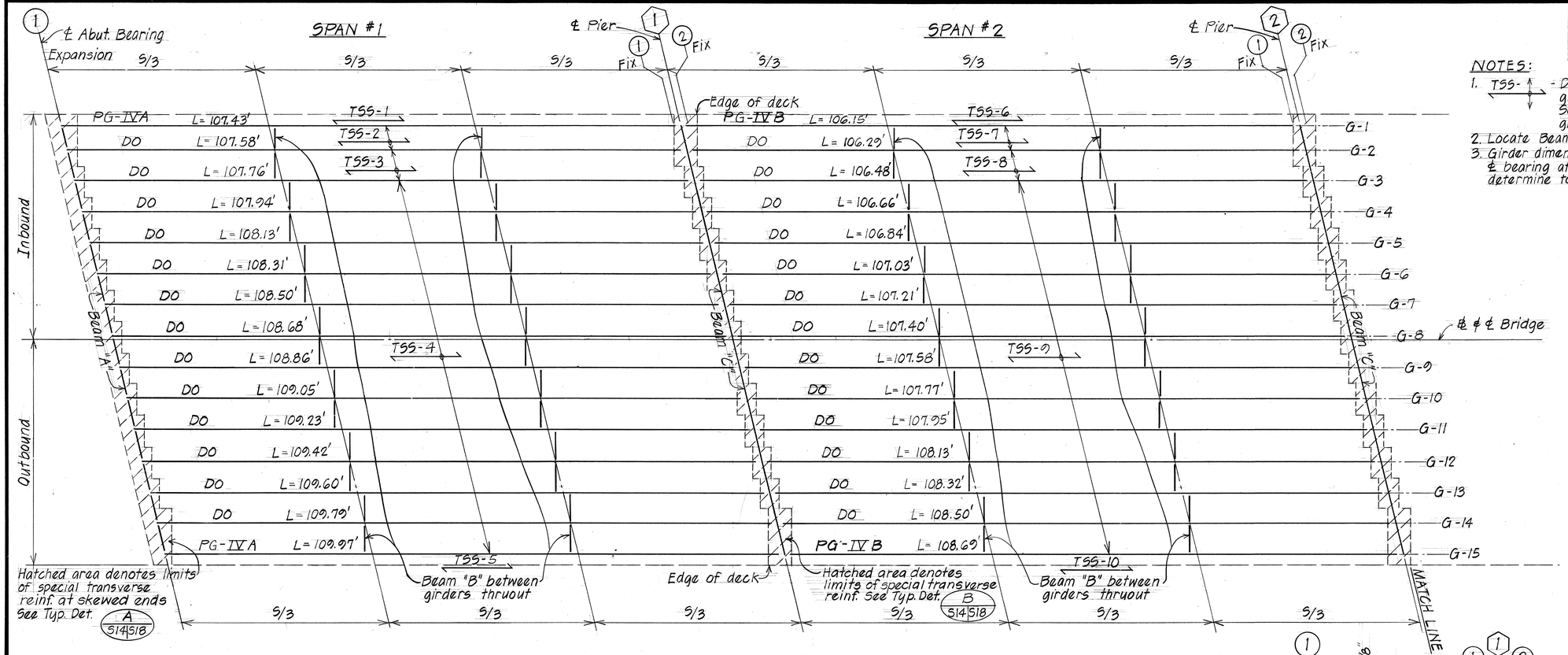

PART DECK FRAMING PLAN

Scale: 1" = 10'-0"

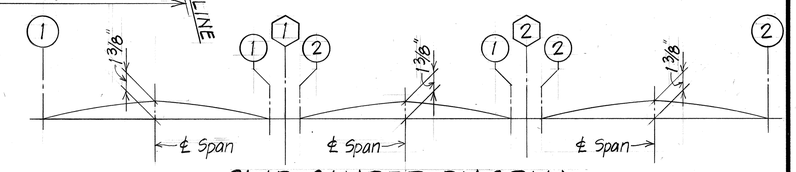

SLAB CAMBER DIAGRAM

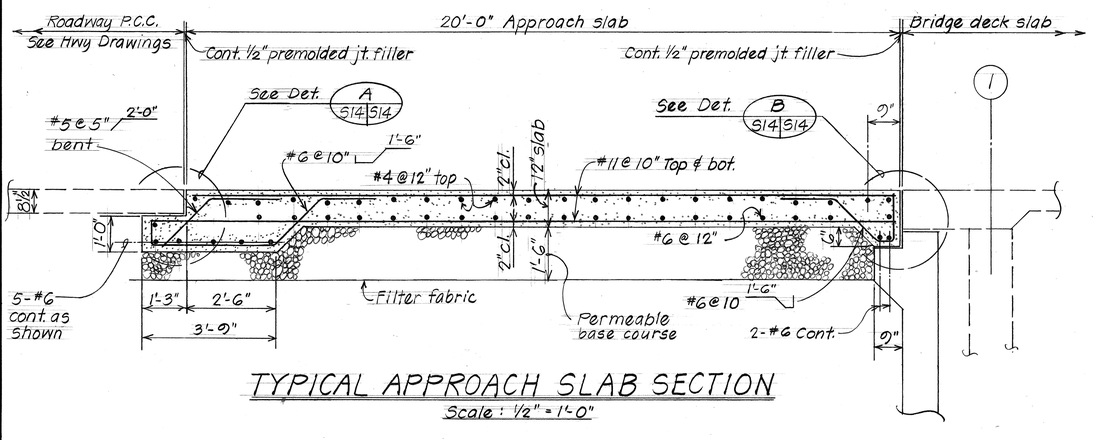

TYPICAL APPROACH SLAB SECTION

Scale: 1/2" = 1'-0"

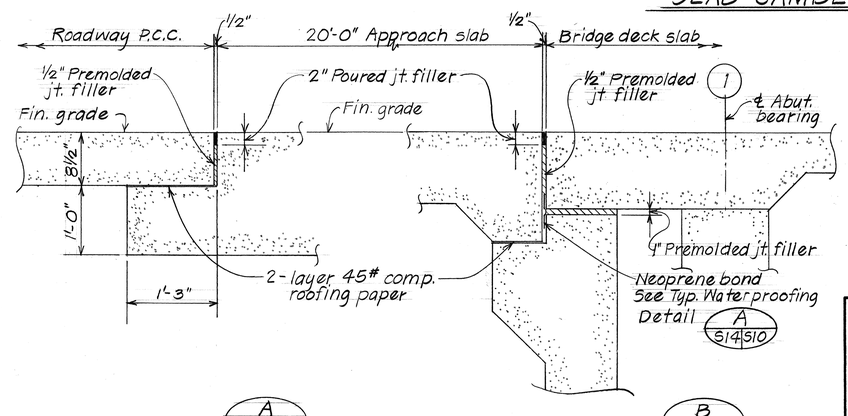

DETAIL A S14 S14

Scale: 1" = 1'-0"

DETAIL B S14 S14

Scale: 1" = 1'-0"

STATE OF HAWAII
DEPARTMENT OF TRANSPORTATION
LAND TRANSPORTATION FACILITIES DIVISION

ROUTE H-3 - KUOU STREAM BRIDGE

DECK FRAMING PLAN
APPROACH SLAB DETAILS

F.A.I. Proj. No. I-H3-1(50)
KANEOHE I.C. TO HALEKOU I.C.

Scale: As Noted — Date: August 1987

SHEET No. S14 OF 35 SHEETS

ORIGINAL PLAN		DATE
	SURVEY PLOTTED BY	
	DRAWN BY L.L.Y.	7/83
	TRACED BY	"
	DESIGNED BY D.W.	7/83
NOTE BOOK	QUANTITIES BY D.H.	7/83
No.	CHECKED BY D.L.O.	7/83

FED. ROAD DIST. NO.	STATE	FED. AID PROJ. NO.	FISCAL YEAR	SHEET NO.	TOTAL SHEETS
HAWAII	HAW.	I-H3-1(50)	1989	96	164

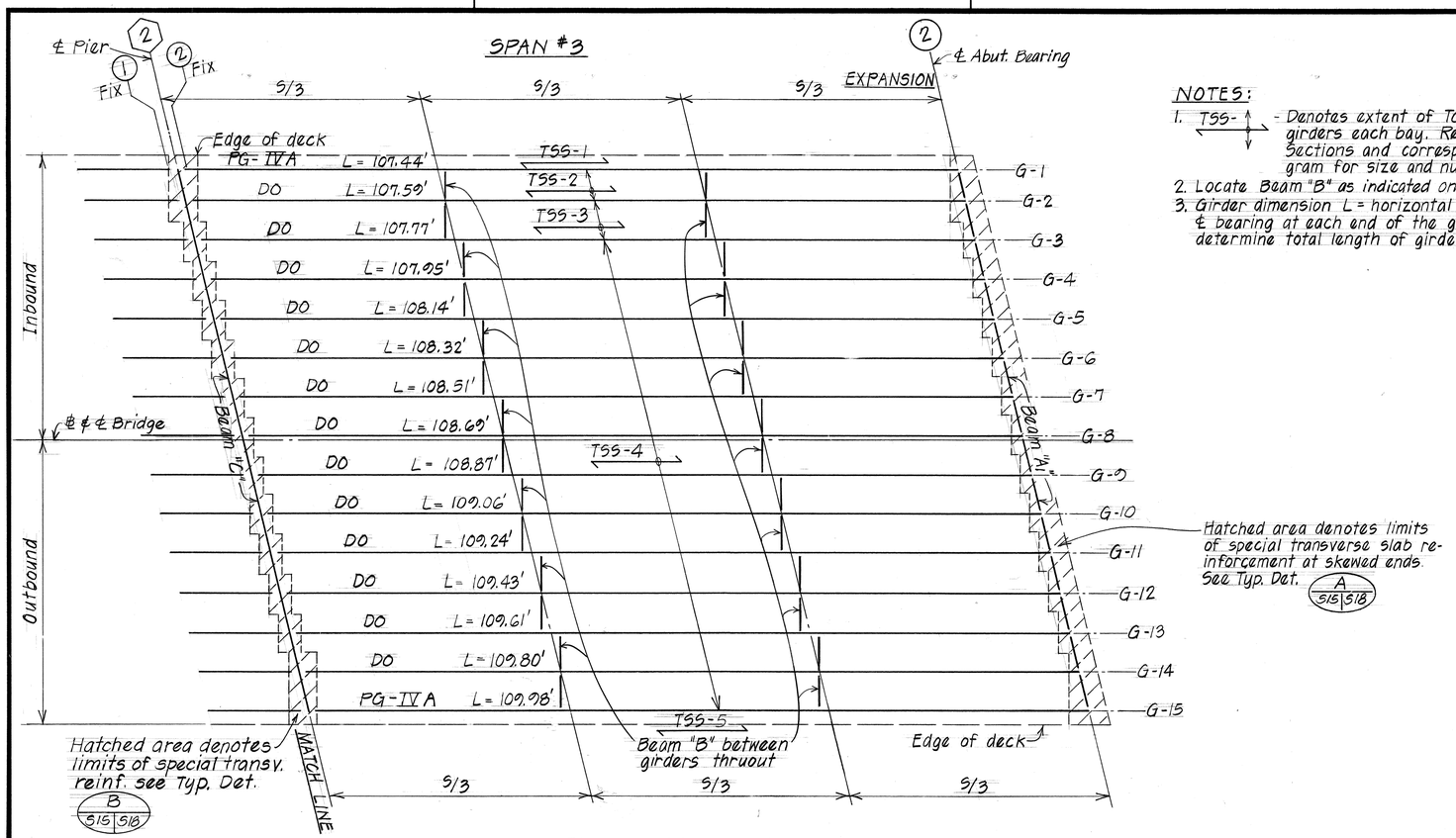

PART DECK FRAMING PLAN

Scale: 1" = 10'-0"

NOTES:

1. TSS- - Denotes extent of Top Slab Strip (TSS-) between girders each bay. Refer to Typical Deck Slab Sections and corresponding Bar Placement Diagram for size and numbers, on Sht. #5/6.
2. Locate Beam "B" as indicated on Plan.
3. Girder dimension L = horizontal measurement between girder ℄ bearing at each end of the girder. The Contractor shall determine total length of girder.

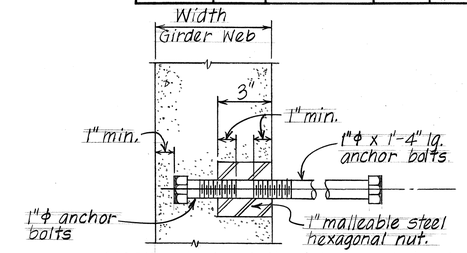

NOTE: Anchor bolts & inserts incidental to concrete & will not be paid for separately.

5/9 A 5/5 5/5 TYPICAL INSERT DETAIL

Scale: 3" = 1'-0"

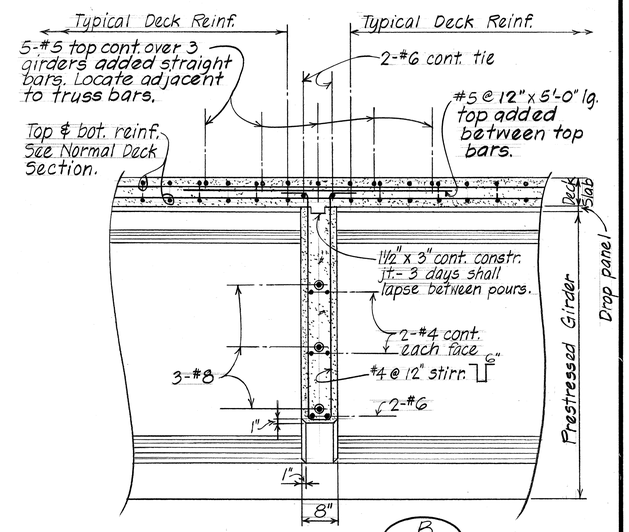

SECTION B 5/5 5/5

Scale: 3/4" = 1'-0"

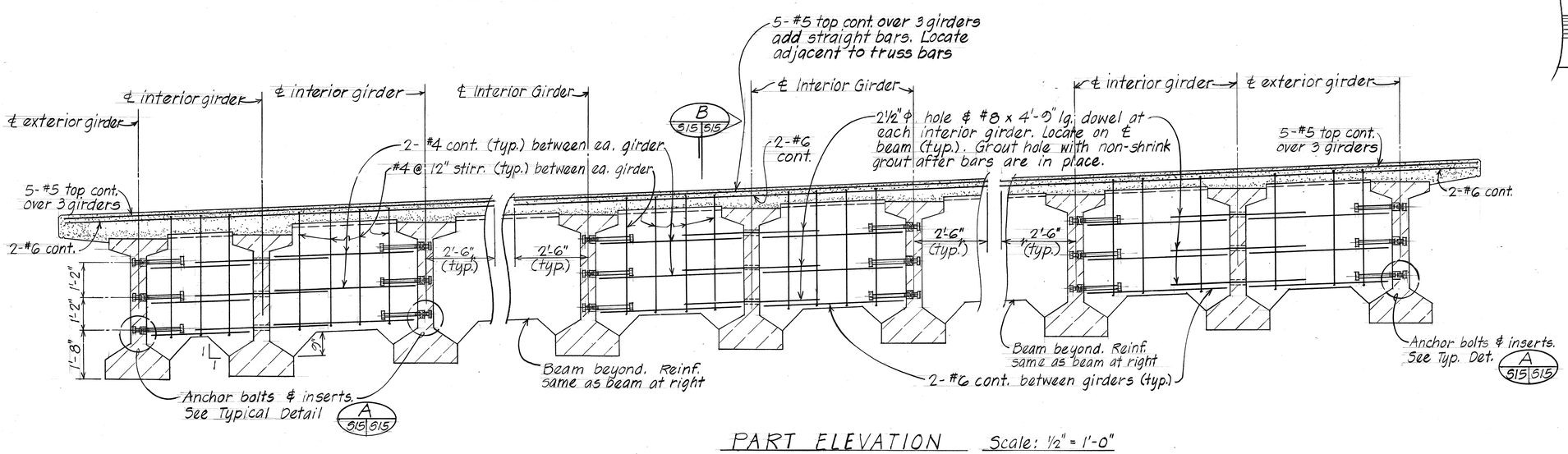

PART ELEVATION Scale: 1/2" = 1'-0"

TYPICAL BEAM "B" DETAILS

ORIGINAL PLAN		
	SURVEY PLOTTED BY	DATE 7/83
	DRAWN BY	" " 7/83
	TRACED BY D.C.O.	D.W. 7/83
	DESIGNED BY	" " 7/83
NOTE BOOK	QUANTITIES BY	T.M. 7/83
No.	CHECKED BY	D.C.O. " " 7/83

STATE OF HAWAII
DEPARTMENT OF TRANSPORTATION
LAND TRANSPORTATION FACILITIES DIVISION

ROUTE H-3 - KUOU STREAM BRIDGE

DECK FRAMING PLAN
BEAM "B" DETAILS

F.A.I. Proj. No. I-H3-1(50)
KANEOHE I.C. TO HALEKOU I.C.

Scale: As Noted Date: August 1987

SHEET No. 5/5 OF 35 SHEETS

FED. ROAD DIST. NO.	STATE	FED. AID PROJ. NO.	FISCAL YEAR	SHEET NO.	TOTAL SHEETS
HAWAII	HAW.	I-H3-1(50)	1989	97	164

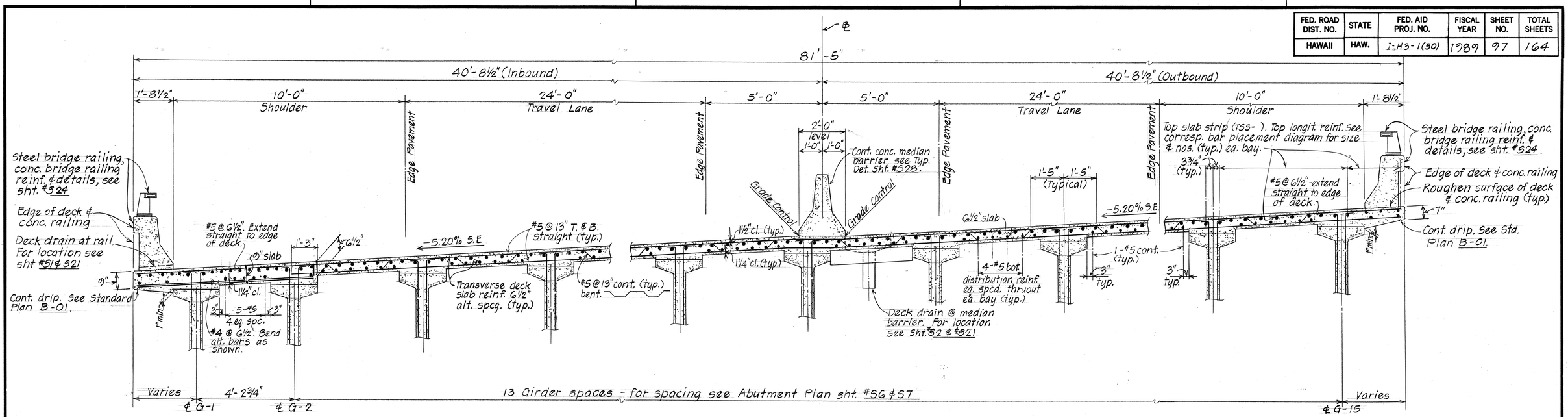

NORMAL DECK SECTION

Scale: ½" = 1'-0"

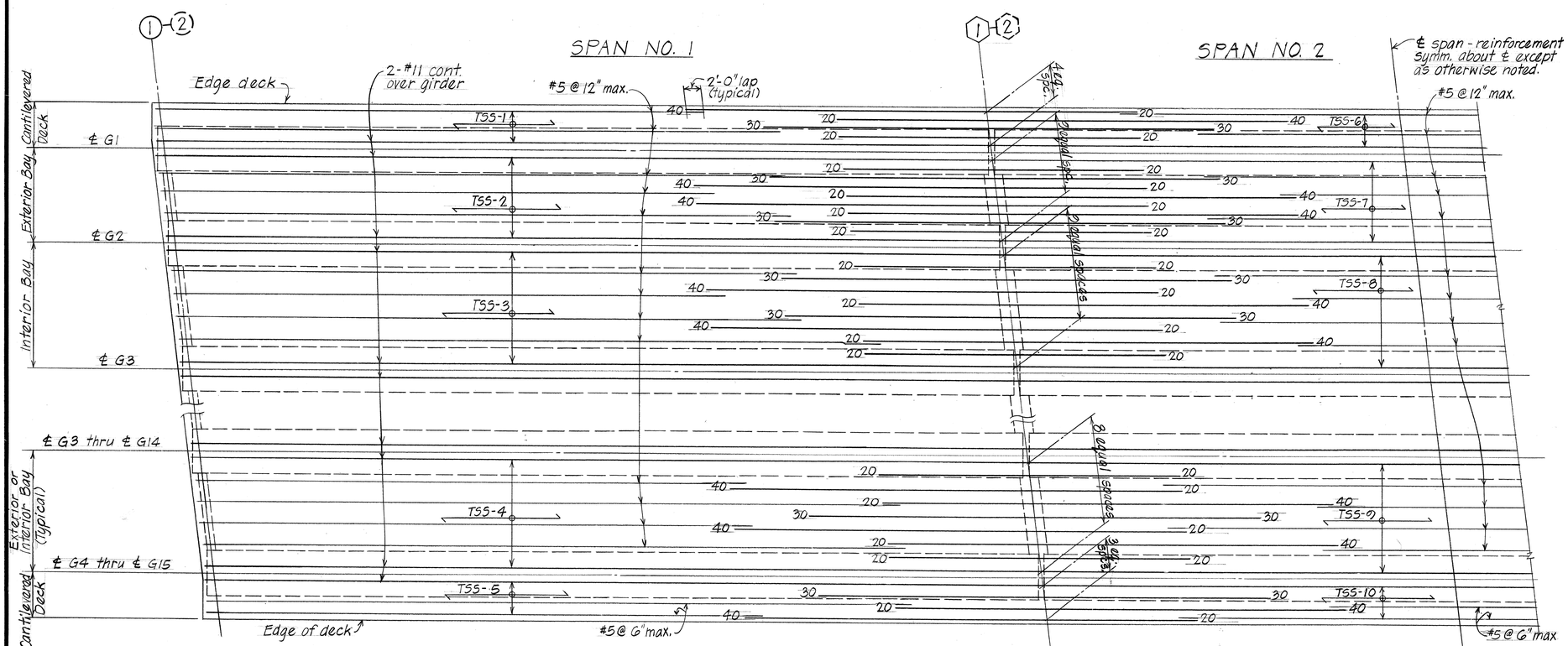

TYPICAL ARRANGEMENT OF REINFORCEMENT - TOP SLAB STRIPS TSS-1 THRU TSS-10 INCLUSIVE

Scale - Vertical: 3/8" = 1'-0"
Horizontal: 1/8" = 1'-0"

NOTE:

1. All reinforcement #11 except as noted otherwise.
2. Number at end of bars denotes dimension in feet from the adjacent pier line numeral.
3. For additional slab reinforcement see Normal Section and corresponding details.
4. All #5 @ 12" bars shall be extended and lapped 2'-0" min. with the adjacent #11 bars as shown.

ORIGINAL PLAN	SURVEY PLOTTED BY	DATE 7/83
	DRAWN BY N.N.	" 7/83
	TRACED BY	" 7/83
NOTE BOOK	DESIGNED BY D.W.	" 7/83
	QUANTITIES BY D.L.M.	" 7/83
No.	CHECKED BY D.L.O.	" 7/83

STATE OF HAWAII
DEPARTMENT OF TRANSPORTATION
LAND TRANSPORTATION FACILITIES DIVISION

ROUTE H-3 - KUOU STREAM BRIDGE
NORMAL DECK SECTION
DECK REINF. DIAGRAM - TSS 1 THRU TSS 10

F.A.I. Proj. No. I-H3-1(50)
KANEOHE I.C. TO HALEKOU I.C.

Scale: As Noted Date: August 1987

SHEET No. 51G OF 35 SHEETS

FED. ROAD DIST. NO.	STATE	FED. AID PROJ. NO.	FISCAL YEAR	SHEET NO.	TOTAL SHEETS
HAWAII	HAW.	I-H3-1(50)	1987	98	164

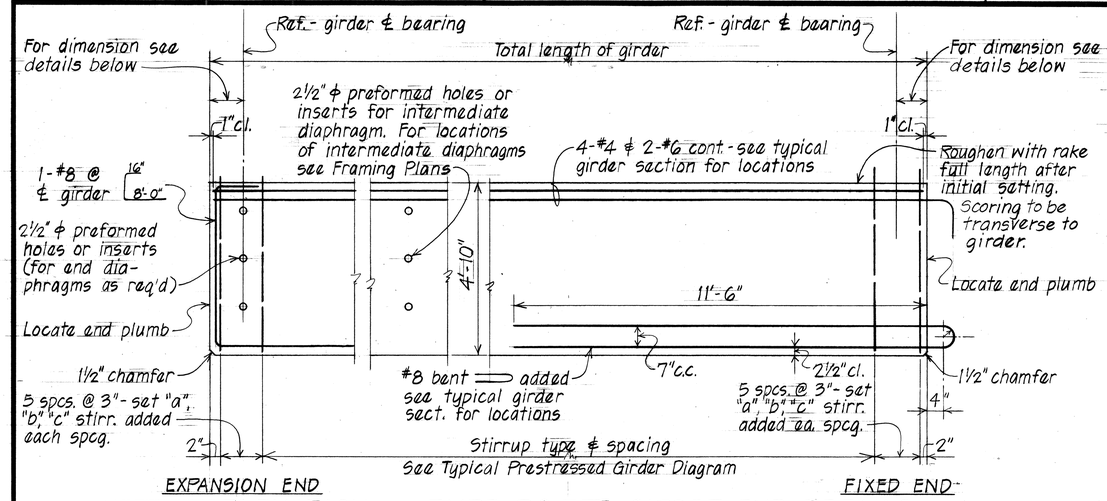

ELEVATION ~ TYPE PG-IV GIRDER END DETAILS

No Scale

BUNDLING OF PRESTRESSING REINFORCEMENT

1. Strands may be bundled in groups as shown.
2. The minimum distance "S" between groups or individual strands: 2" for ½" strands.
3. "S" is measured between centers of adjacent strands.

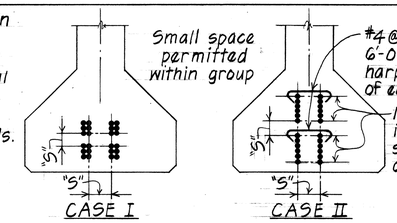

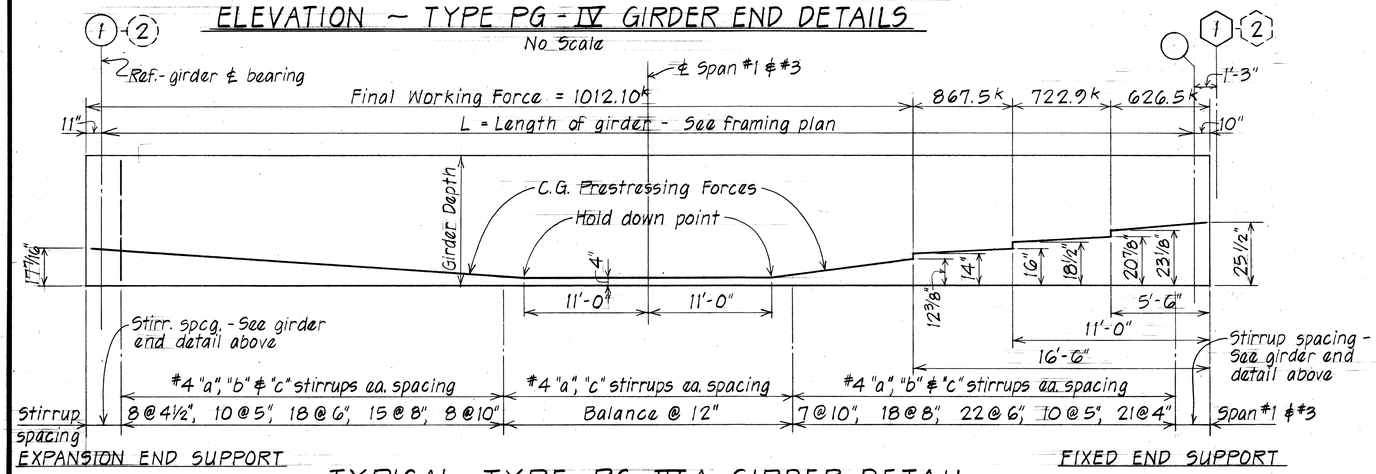

TYPICAL TYPE PG-IV A GIRDER DETAIL

No Scale

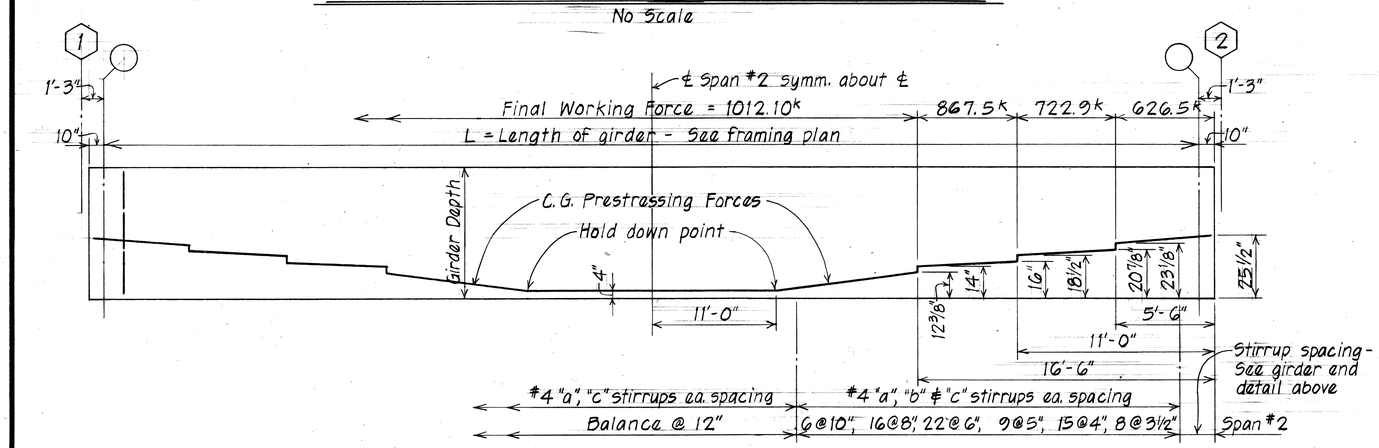

TYPICAL TYPE PG-IV B GIRDER DETAIL

No Scale

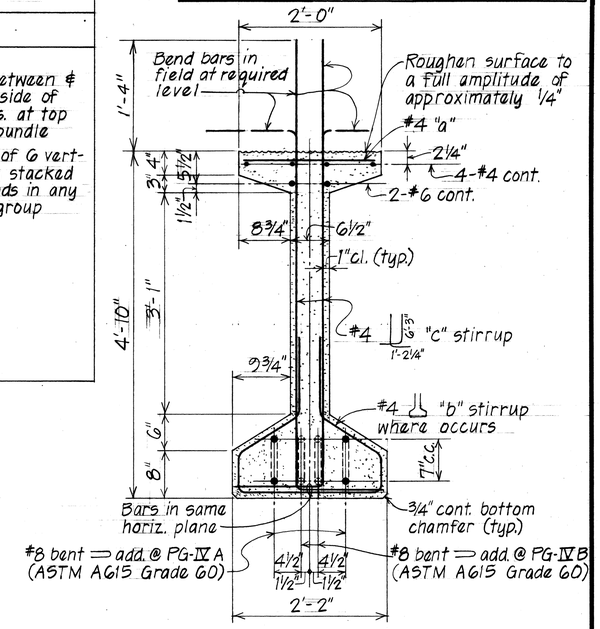

TYPICAL PRESTRESSED CONCRETE GIRDER TYPE PG-IV A & PG-IV B

No Scale

GENERAL NOTES

1. All strand patterns shall be approved by the Engineer.
2. Forms must be removed and the beams inspected before strands are cut.
3. For additional holes and inserts in prestressed girders for beam connections refer to corresponding beam details. See sht. #5/5, #5/10
4. For additional prestressed girder details not covered by these drawings refer to corresponding detail plans.
5. The calculated camber includes the effect of the initial prestress force and the weight of the girder upon removal from the prestressing bed. The actual camber at time of deck pour shall not exceed the calculated camber by more than 100%. Calculated midspan camber = 2.0 inches. Contractor shall submit a record of cambers to the Engineer. This record shall include cambers at time of detensioning, delivery, and deck pour.

PRESTRESSED CONCRETE GIRDERS:

f'_c = 6000 psi @ 28 days

f_{ci} = 4750 psi @ transfer - for girder dim. L = 108'-0" or greater
4850 - All others

PRESTRESSED STRANDS:

A. ½" ϕ 270 ksi, 7 wire stressed-relieved strands (ASTM A416)
Total losses other than friction = 45,000 psi

B. Allowable stresses in strands shall be in accordance with Design Specifications (See General Structure Notes)

STATE OF HAWAII
DEPARTMENT OF TRANSPORTATION
LAND TRANSPORTATION FACILITIES DIVISION

ROUTE H-3 - KUOU STREAM BRIDGE

TYP. PRESTRESSED CONC. GIRDER DETAILS
TYPE PG-IV A & PG-IV B

F.A.I. Proj. No. I-H3-1(50)
KANEOHE I.C. TO HALEKOU I.C.

Scale: As Noted Date: August 1987

SHEET No. 5/7 OF 35 SHEETS

ORIGINAL PLAN	SURVEY PLOTTED BY	DATE
	DRAWN BY	
	TRACED BY	
NOTE BOOK	DESIGNED BY	
	QUANTITIES BY	
No.	CHECKED BY	

FED. ROAD DIST. NO.	STATE	FED. AID PROJ. NO.	FISCAL YEAR	SHEET NO.	TOTAL SHEETS
HAWAII	HAW.	I-H3-1(50)	1989	99	164

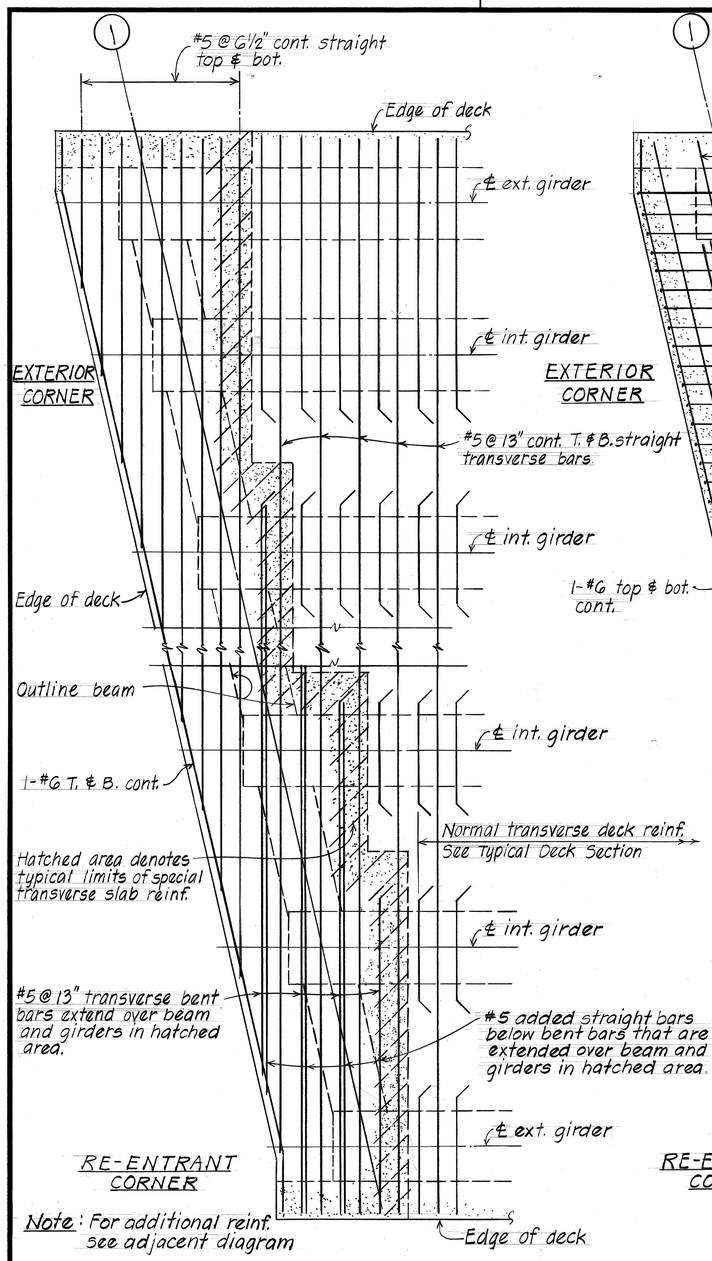

SHOWING TRANSVERSE DECK REINFORCEMENT

A 5/15 5/14 5/18 ABUTMENT 1 AS SHOWN

ABUTMENT 2 SIMILAR EXCEPT AS OTHERWISE NOTED

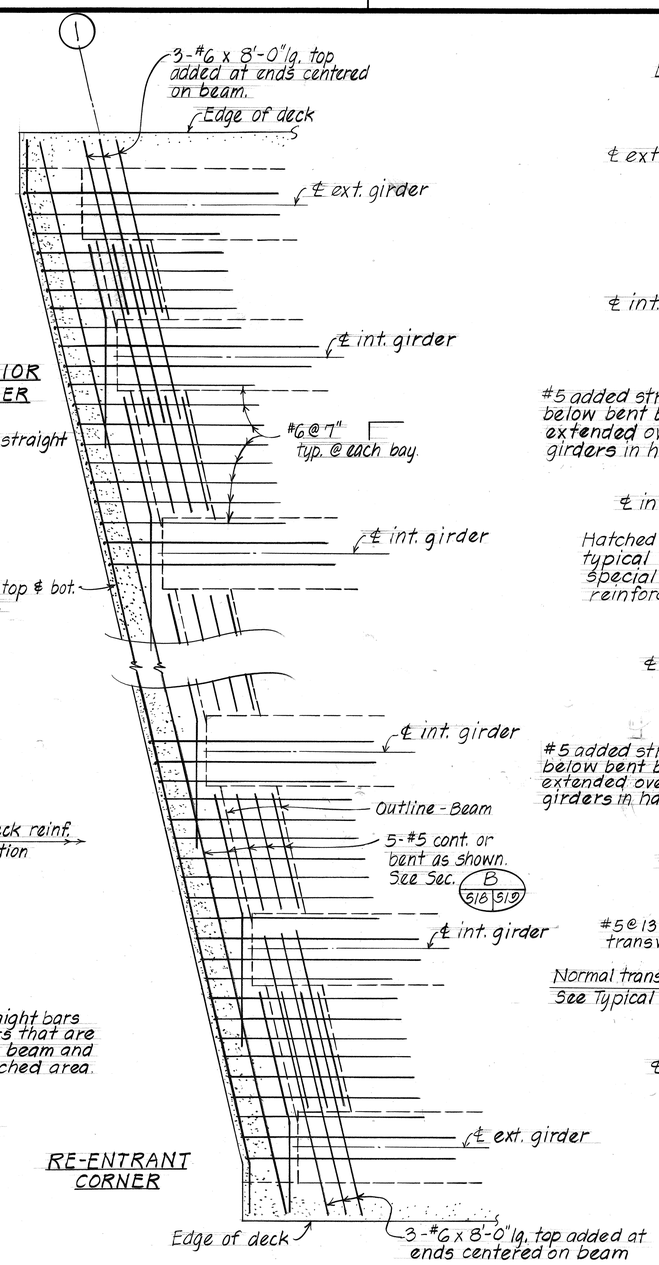

SHOWING ADDED REINFORCEMENT

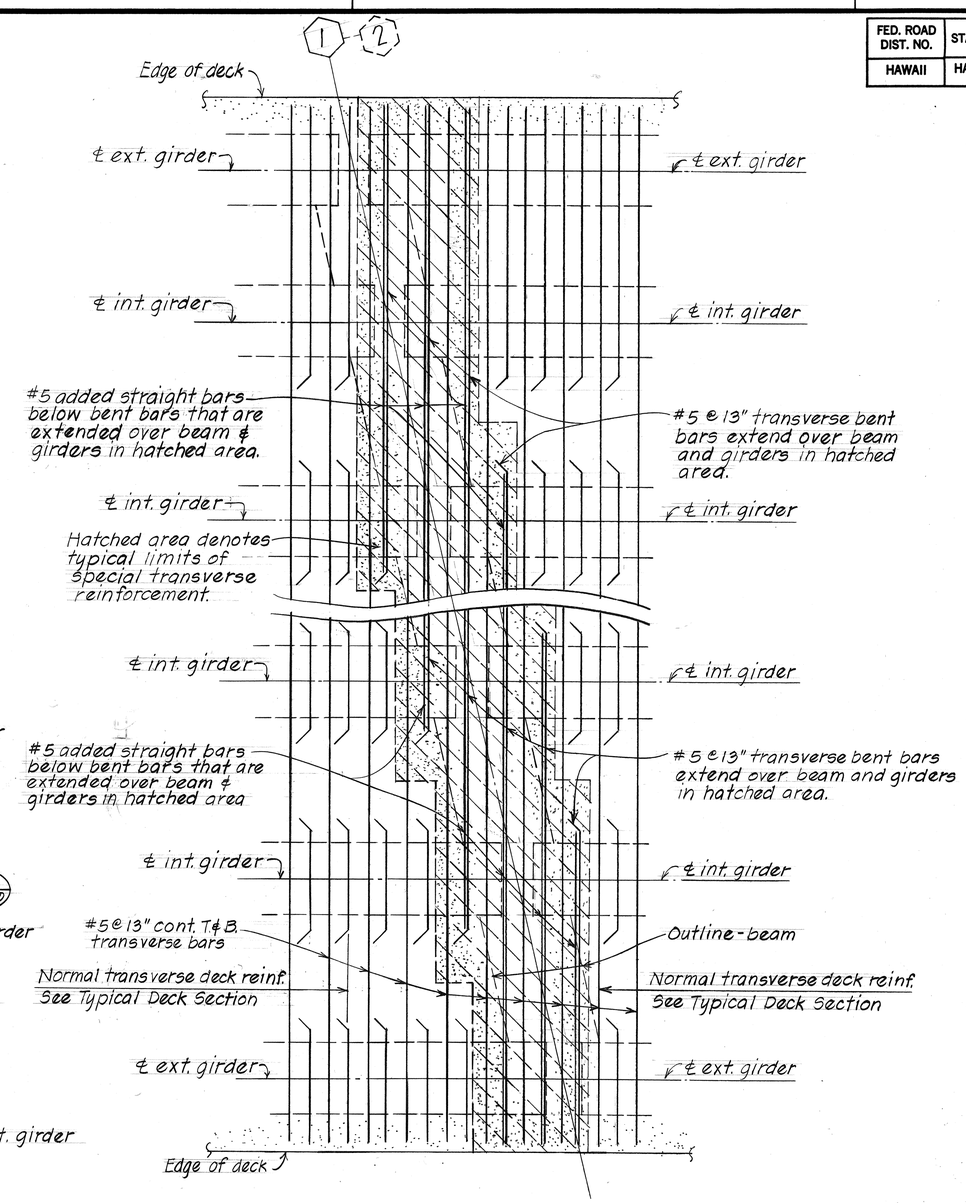

SHOWING TRANSVERSE DECK REINFORCEMENT

B 5/15 5/14 5/18 AT PIER 1 & 2

PART PLAN- SPECIAL DECK REINFORCEMENT AT ABUTMENTS & PIERS

Scale: 1/2" = 1'-0"

ORIGINAL PLAN	SURVEY PLOTTED BY	DATE
	SURVEY BY	
	DRAWN BY	N.J.
	TRACED BY	
NOTE BOOK	DESIGNED BY	DGO
	QUANTITIES BY	T.M.
No.	CHECKED BY	

STATE OF HAWAII
DEPARTMENT OF TRANSPORTATION
LAND TRANSPORTATION FACILITIES DIVISION

ROUTE H-3 - KUOU STREAM BRIDGE

PART PLAN

SPECIAL DECK REINF. AT ABUTS. & PIERS

F.A.I. Proj. No. I-H3-1(50)
KANEOHE I.C. TO HALEKOU I.C.

Scale: As Noted Date: August 1987

SHEET No. 5/18 OF 35 SHEETS

FED. ROAD DIST. NO.	STATE	FED. AID PROJ. NO.	FISCAL YEAR	SHEET NO.	TOTAL SHEETS
HAWAII	HAW.	I-H3-1(50)	1989	100	164

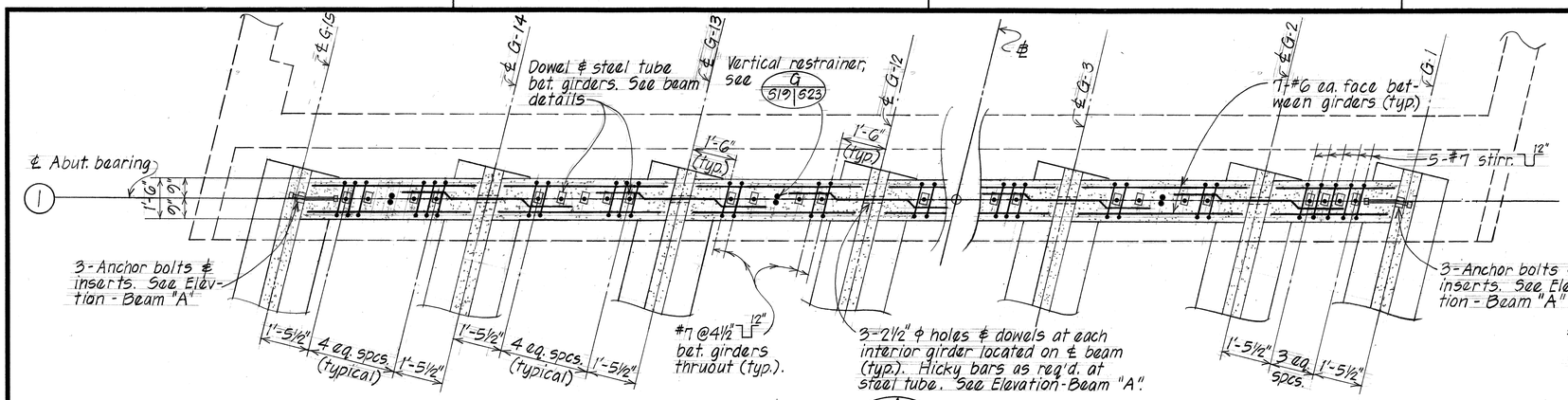

SECTION A 510 510

Scale: 1/2" = 1'-0"

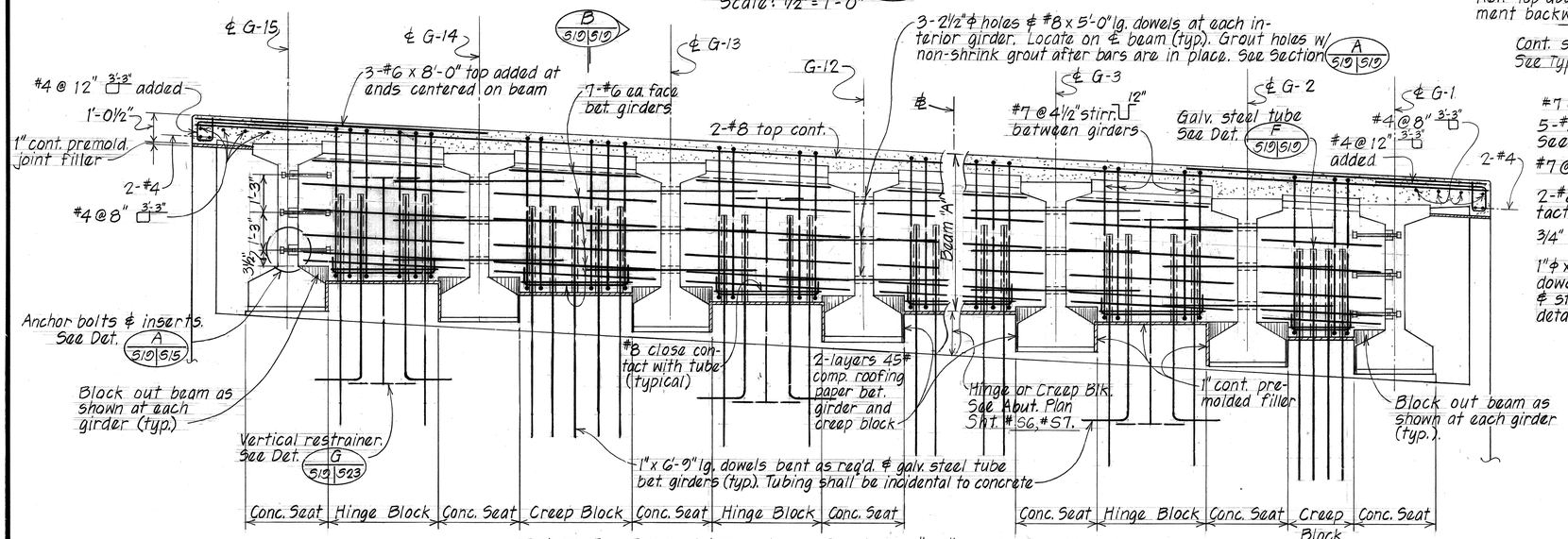

PART ELEVATION - BEAM "A" AS SHOWN

Scale: 1/2" = 1'-0"

(BEAM "A1" SIMILAR EXCEP OPPOSITE HAND AND AS NOTED OTHERWISE)

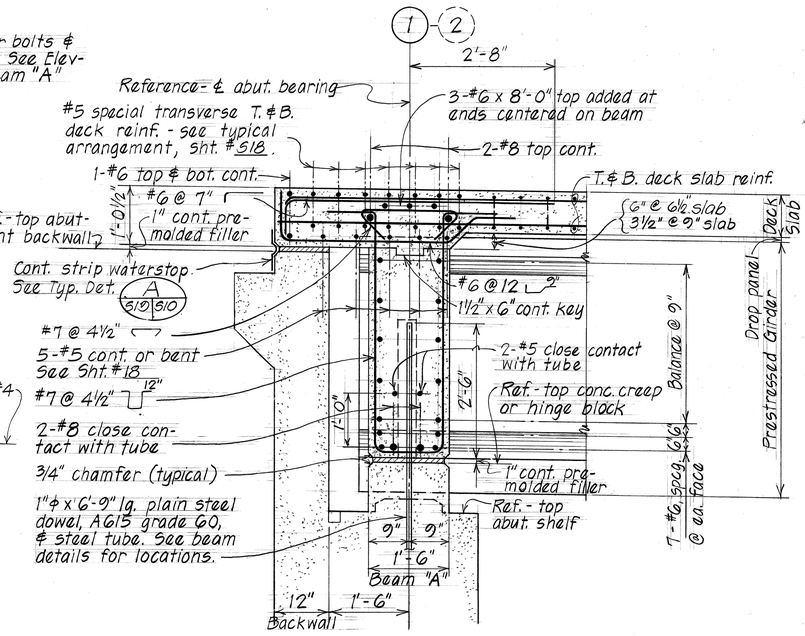

SECTION B 510 510

Scale: 3/4" = 1'-0"

518

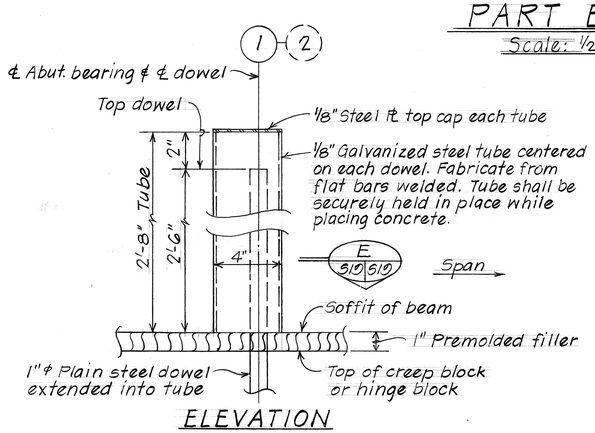

ELEVATION

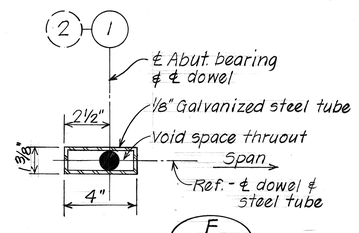

SECTION E 510 510

TYP. DETAIL - EXP END HINGE DOWEL & METAL TUBE F 510 510

Scale: 3" = 1'-0"

ORIGINAL PLAN			
	SURVEY PLOTTED BY	L.M.A.	DATE 7/83
	DRAWN BY	D.L.O.	" 7/83
	TRACED BY	"	" 7/83
NOTE BOOK	DESIGNED BY	D.L.O.	" 7/83
	QUANTITIES BY	D.L.O.	" 7/83
No.	CHECKED BY	D.L.O.	" 7/83

STATE OF HAWAII
DEPARTMENT OF TRANSPORTATION
LAND TRANSPORTATION FACILITIES DIVISION

ROUTE H-3 - KUOU STREAM BRIDGE

BEAM "A" DETAILS

F.A.I. Proj. No. I-H3-1(50)
KANEOHE I.C. TO HALEKOU I.C.

Scale: As Noted — Date: August 1987

SHEET No. 510 OF 35 SHEETS

FED. ROAD DIST. NO.	STATE	FED. AID PROJ. NO.	FISCAL YEAR	SHEET NO.	TOTAL SHEETS
HAWAII	HAW.	I-H3-1(50)	1989	101	164

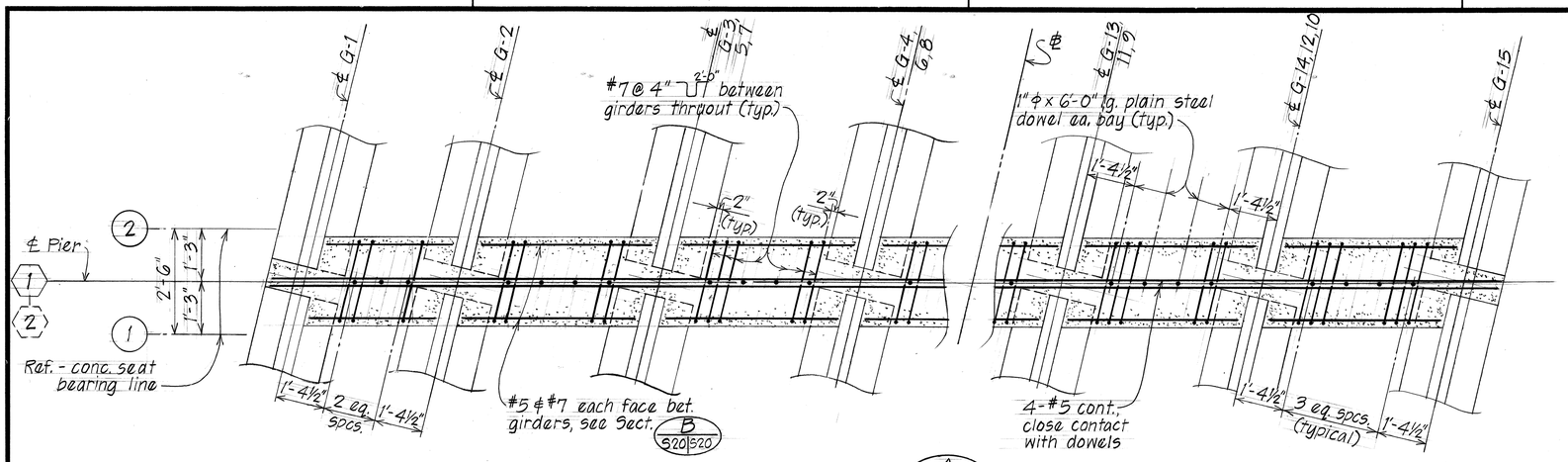

SECTION A S20 S20

Scale: 1/2" = 1'-0"

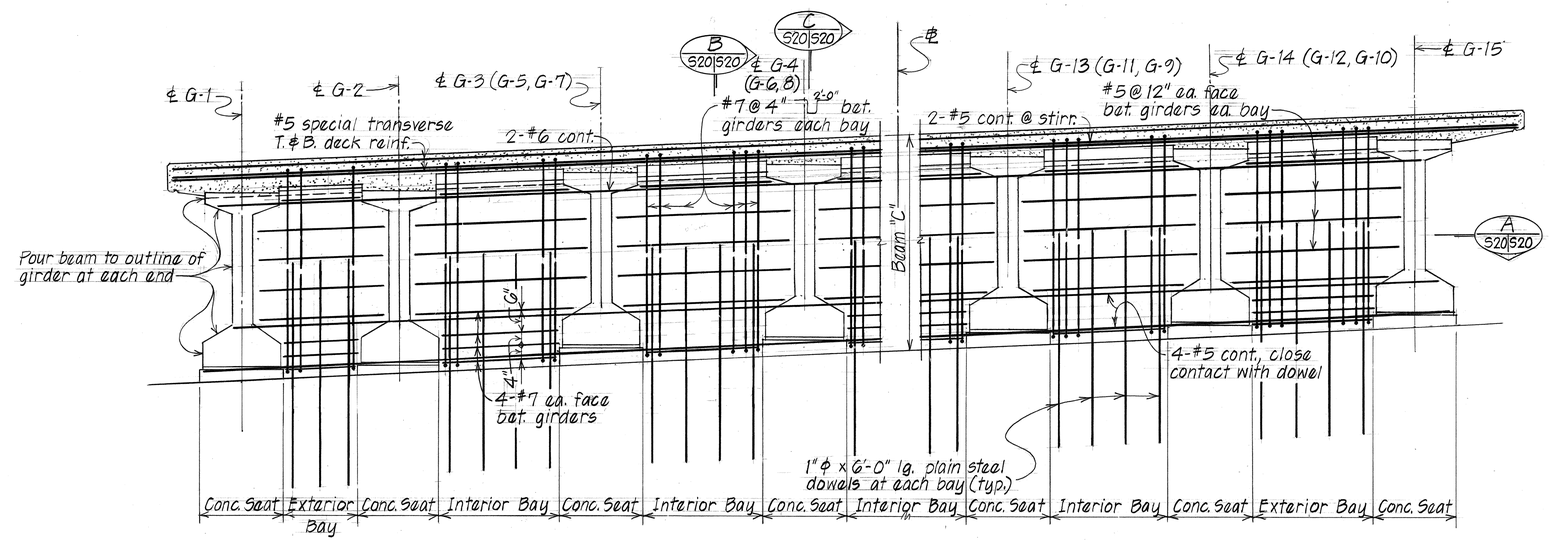

PART ELEVATION - BEAM "C"

Scale: 1/2" = 1'-0"

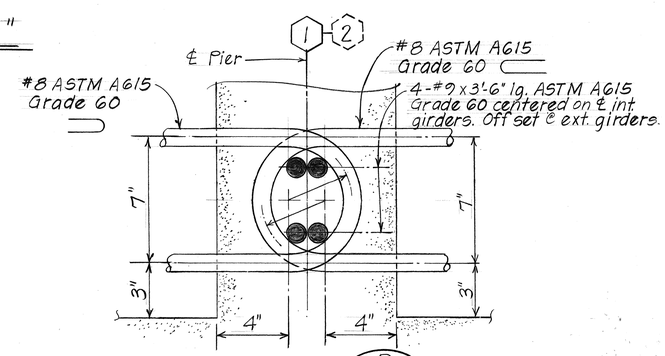

DETAIL D S20 S20

Scale: 3" = 1'-0"

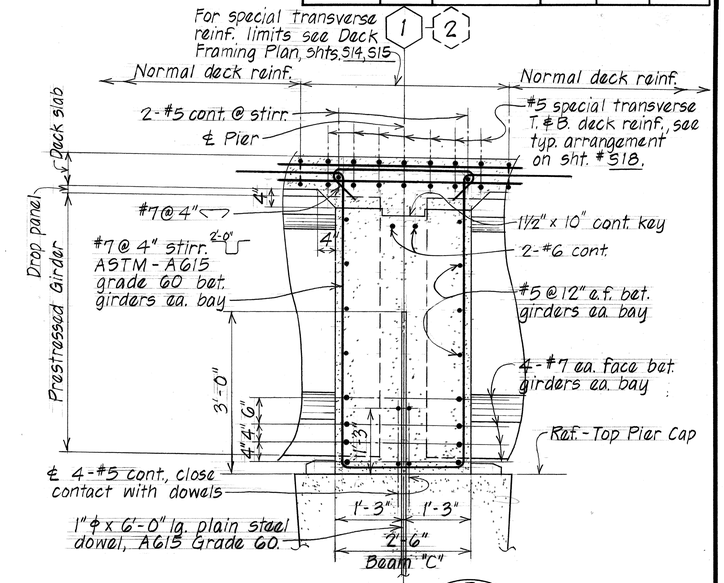

SECTION B S20 S20

Scale: 3/4" = 1'-0"

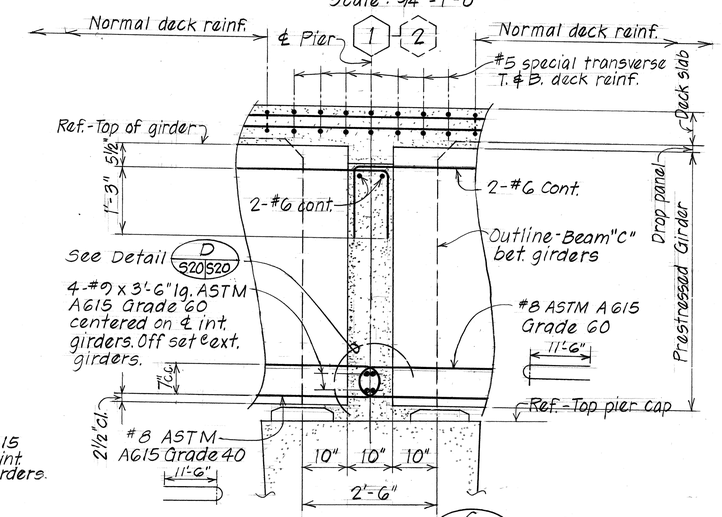

SECTION C S20 S20

Scale: 3/4" = 1'-0"

STATE OF HAWAII
DEPARTMENT OF TRANSPORTATION
LAND TRANSPORTATION FACILITIES DIVISION

ROUTE H-3 - KUOU STREAM BRIDGE

BEAM "C" DETAILS

F.A.I. Proj. No. I-H3-1(50)
KANEOHE I.C. TO HALEKOU I.C.

Scale: As Noted — Date: August 1987

SHEET No. S20 OF 35 SHEETS

ORIGINAL PLAN		DATE
	SURVEY PLOTTED BY	
	DRAWN BY G.U.	7/83
	TRACED BY	
NOTE BOOK	DESIGNED BY D.C.O.	7/83
	QUANTITIES BY T.M.	7/83
No.	CHECKED BY D.C.O.	7/83

FED. ROAD DIST. NO.	STATE	FED. AID PROJ. NO.	FISCAL YEAR	SHEET NO.	TOTAL SHEETS
HAWAII	HAW.	I-H3-1(50)	1989	102	164

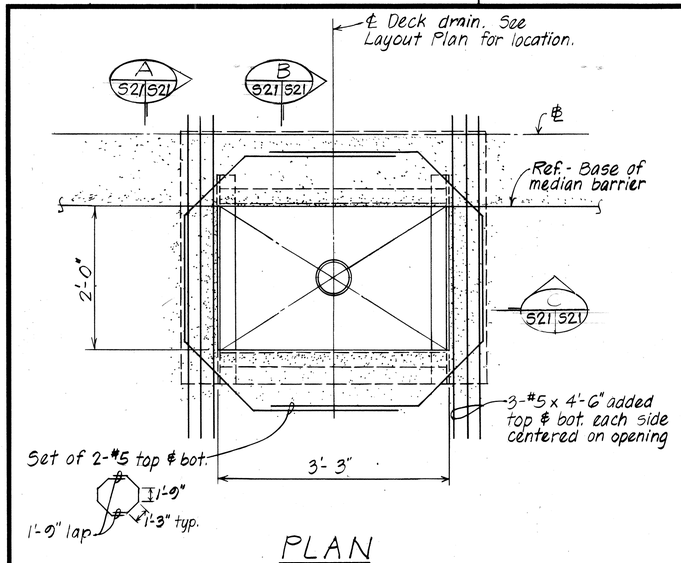

PLAN

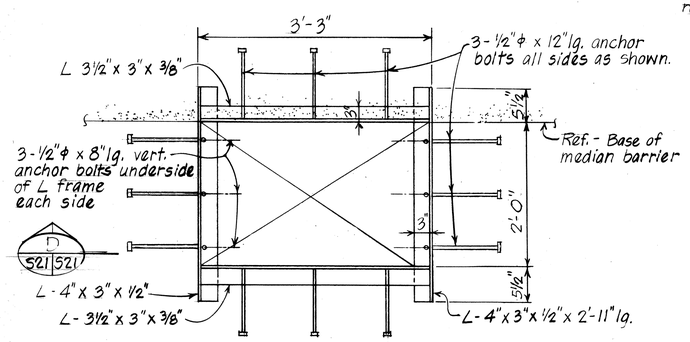

PLAN - GRATE FRAME

NOTE: For additional Type A-9 frame & grate details, see Std Plans sht # H-09.

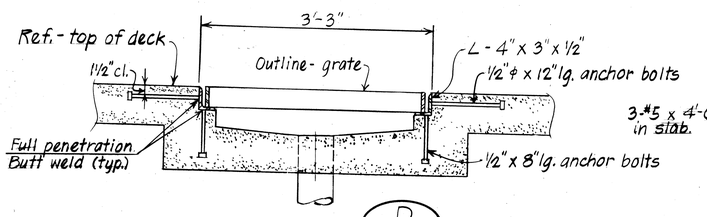

SECTION D S21 S21

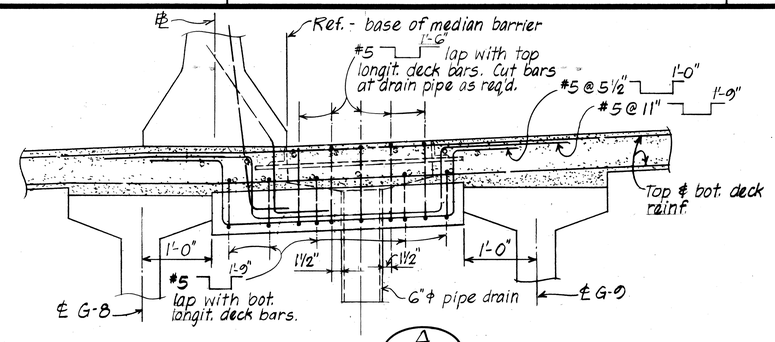

SECTION A S21 S21

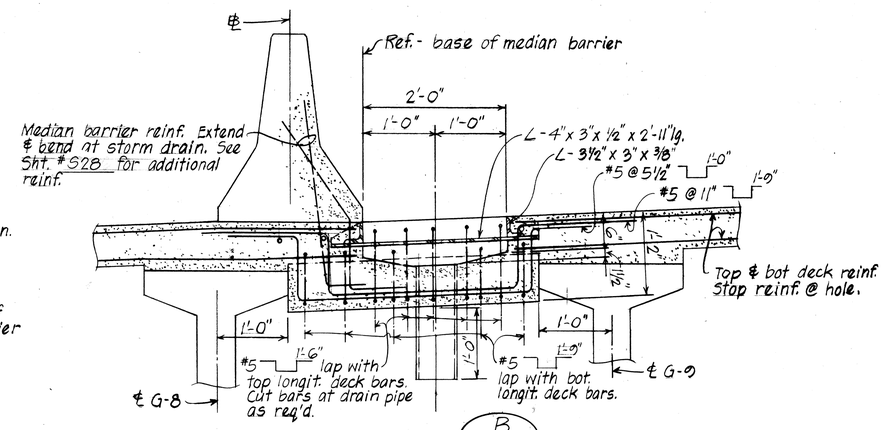

SECTION B S21 S21

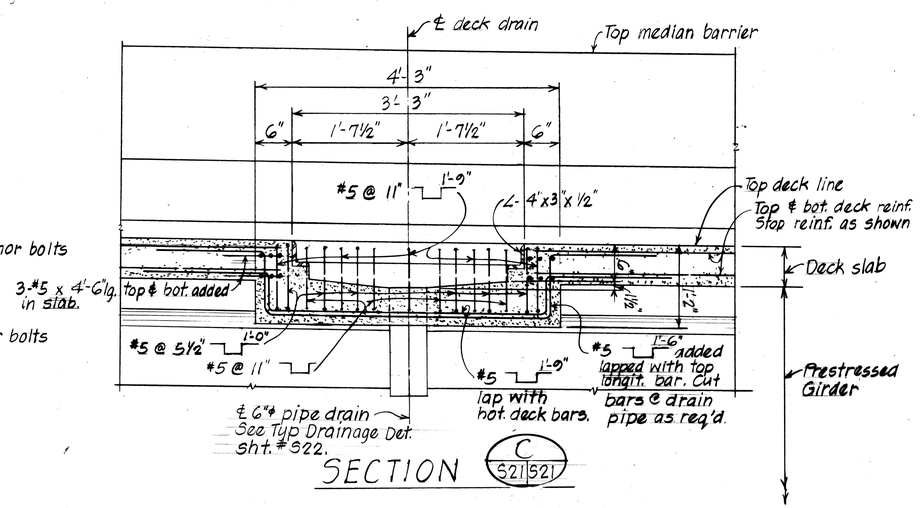

SECTION C S21 S21

TYPICAL STORM DRAIN DETAILS AT MEDIAN BARRIER

Scale: 1" = 1' 0"

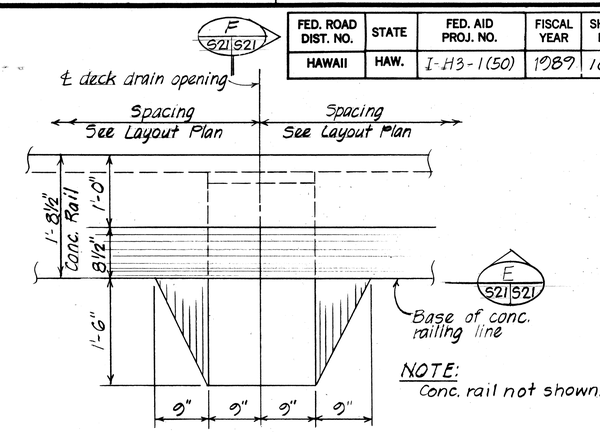

NOTE: Conc. rail not shown.

TYPICAL PLAN - DECK DRAIN DETAIL AT RAIL

Scale: 1" = 1'-0"

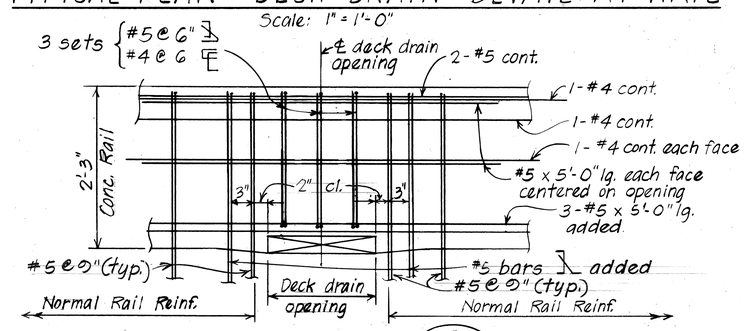

ELEVATION E S21 S21

Scale: 1" = 1'-0"

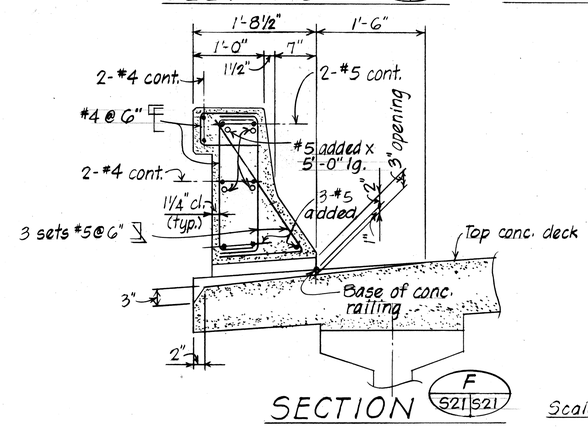

SECTION F S21 S21

Scale: 1" = 1'-0"

ORIGINAL PLAN	SURVEY PLOTTED BY	DATE
	SURVEY BY	
	TRACED BY	
NOTE BOOK	DESIGNED BY D.C.O.	
No.	QUANTITIES BY	
	CHECKED BY D.C.O.	

STATE OF HAWAII
DEPARTMENT OF TRANSPORTATION
LAND TRANSPORTATION FACILITIES DIVISION

ROUTE H-3 - KUOU STREAM BRIDGE

TYPICAL DECK DRAIN DETAILS

F.A.I. Proj. No. I-H3-1(50)
KANEOHE I.C. TO HALEKOU I.C.

Scale: As Noted Date: August 1987

SHEET No. S21 OF 35 SHEETS

FED. ROAD DIST. NO.	STATE	FED. AID PROJ. NO.	FISCAL YEAR	SHEET NO.	TOTAL SHEETS
HAWAII	HAW.	I-H3-1(50)	1989	103	164

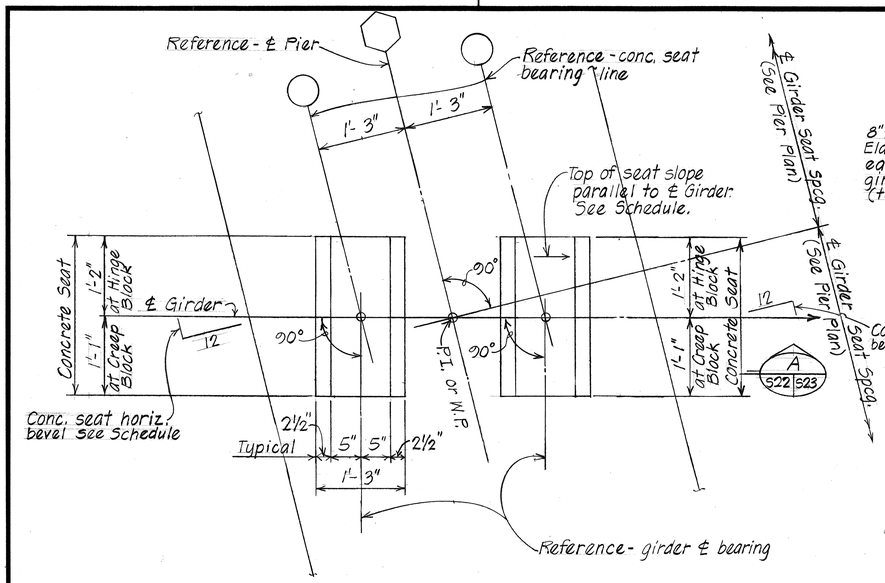

AT PIER CAP

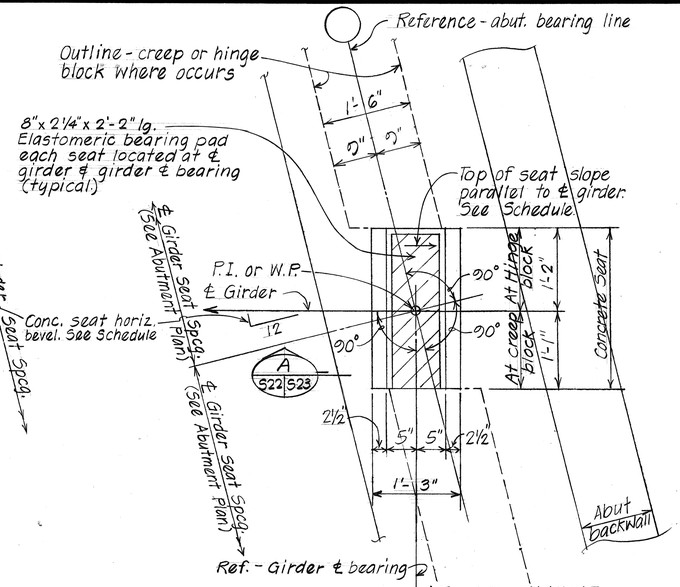

AT ABUTMENT

PART PLAN - TYPICAL GIRDER CONCRETE SEAT

Scale: 1" = 1'-0"

REFERENCE NOTE:
1. Refer to sht. # S23 for conc. seat, hinge & creep block details.
2. Refer to sht. # S13 for pier cap details.

GIRDER CONCRETE SEAT HORIZONTAL BEVEL SCHEDULE

LOCATION / GIRDER NO.	ABUTMENT BEARING ①	SPAN #1 ① DIRECTION BEVEL	SPAN #1 ② DIRECTION BEVEL	SPAN #2 ① DIRECTION BEVEL	SPAN #2 ② DIRECTION BEVEL	SPAN #3 ① DIRECTION BEVEL	SPAN #3 ② DIRECTION BEVEL	ABUTMENT BEARING ②
G-1		2 13/16 : 12	3 1/4 : 12	2 13/16 : 12	3 1/4 : 12	2 13/16 : 12	3 1/4 : 12	
G-2		Do.	3 1/4 : 12	Do.	3 1/4 : 12	Do.	3 1/4 : 12	
G-3		Do.	3 7/32 : 12	Do.	3 7/32 : 12	Do.	3 7/32 : 12	
G-4		Do.	Do.	Do.	Do.	Do.	Do.	
G-5		2 13/16 : 12	Do.	2 13/16 : 12	Do.	2 13/16 : 12	Do.	
G-6		2 25/32 : 12	Do.	2 25/32 : 12	Do.	2 25/32 : 12	Do.	
G-7		Do.	Do.	Do.	Do.	Do.	Do.	
G-8		Do.	3 7/32 : 12	Do.	3 7/32 : 12	Do.	3 7/32 : 12	
G-9		Do.	3 3/16 : 12	Do.	3 3/16 : 12	Do.	3 3/16 : 12	
G-10		2 25/32 : 12	Do.	2 25/32 : 12	Do.	2 25/32 : 12	Do.	
G-11		2 3/4 : 12	Do.	2 3/4 : 12	Do.	2 3/4 : 12	Do.	
G-12		Do.	Do.	Do.	Do.	Do.	Do.	
G-13		Do.	Do.	Do.	Do.	Do.	Do.	
G-14		Do.	3 3/16 : 12	Do.	3 3/16 : 12	Do.	3 3/16 : 12	
G-15		2 3/4 : 12	3 5/32 : 12	2 3/4 : 12	3 5/32 : 12	2 3/4 : 12	3 5/32 : 12	

TOP CONCRETE SEAT ELEVATION & SLOPE SCHEDULE (AT GIRDER & BEARING)

LOCATION / GIRDER NO.	ABUTMENT BEARING ①	DIRECTION TOP SEAT SLOPE	① ①	① ②	DIRECTION TOP SEAT SLOPE	② ①	② ②	DIRECTION TOP SEAT SLOPE	ABUTMENT BEARING ②
G-1	337.78	1/16 : 12	337.40	337.40	1/8 : 12	336.35	336.30	1/8 : 12	334.91
G-2	337.99		337.61	337.61		336.56	336.51		335.12
G-3	338.50		338.10	338.10		337.05	337.00		335.61
G-4	338.78		338.38	338.38		337.32	337.27		335.88
G-5	339.06		338.65	338.66		337.59	337.54		336.15
G-6	339.34		338.93	338.93		337.87	337.82		336.42
G-7	339.63		339.21	339.21		338.14	338.09		336.69
G-8	339.89		339.47	339.47		338.39	338.34		336.95
G-9	340.09		339.66	339.66		338.58	338.53		337.13
G-10	340.37		339.93	339.93		338.85	338.80		337.41
G-11	340.65		340.21	340.21		339.12	339.07		337.68
G-12	340.93		340.48	340.48		339.39	339.34		337.95
G-13	341.22		340.76	340.76		339.66	339.62		338.22
G-14	341.50		341.04	341.04		339.94	339.89		338.00
G-15	341.78	1/16 : 12	341.31	341.31	1/8 : 12	340.21	340.16	1/8 : 12	338.77

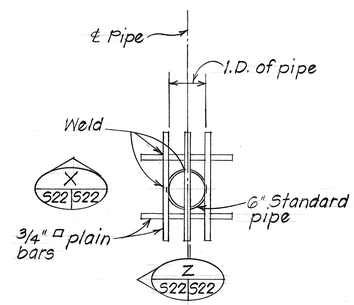

PLAN

NOTE:
All abut. bearing seat elevations are based on steel laminated elastomeric bearing pads. If fabric laminations are used in lieu of the steel, appropriate revisions shall be made to the bearing seat elevations to reflect the reduction in thickness of the bearing pads. Any such revision shall be approved by the Engineer.

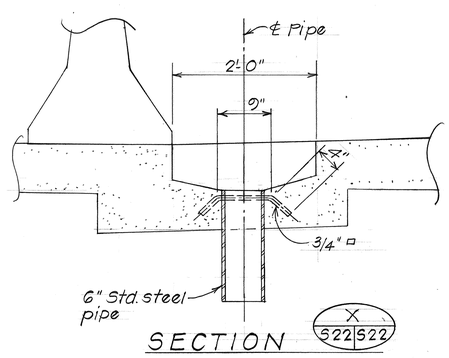

SECTION

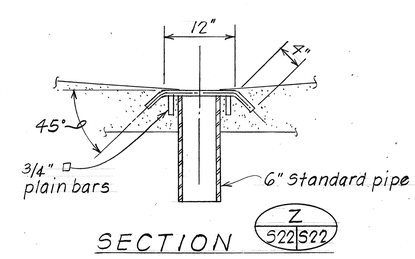

SECTION

TYPICAL DRAINAGE DETAIL

Scale: 1" = 1'-0"

STATE OF HAWAII
DEPARTMENT OF TRANSPORTATION
LAND TRANSPORTATION FACILITIES DIVISION
ROUTE H-3 - KUOU STREAM BRIDGE

TYPICAL DETAILS
PLAN - GIRDER CONC. SEAT & SCHEDULES
F.A.I. Proj. No. I-H3-1(50)
KANEOHE I.C. TO HALEKOU I.C.

Scale: As Noted — Date: August 1987

SHEET No. S22 OF 35 SHEETS

ORIGINAL PLAN — SURVEY PLOTTED BY; DRAWN BY L.M.A.; TRACED BY; DESIGNED BY S.A.L. D.W.; QUANTITIES BY F.M.; CHECKED BY D.C.O.; DATE 7/83; NOTE BOOK; No.

FED. ROAD DIST. NO.	STATE	FED. AID PROJ. NO.	FISCAL YEAR	SHEET NO.	TOTAL SHEETS
HAWAII	HAW.	I-H3-1(50)	1989	104	164

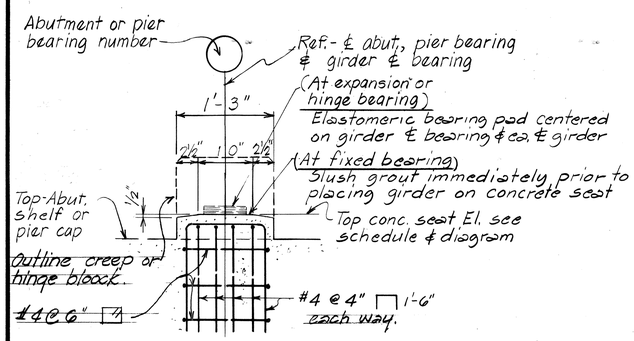

SHOWING REINFORCEMENT AND DIMENSIONS

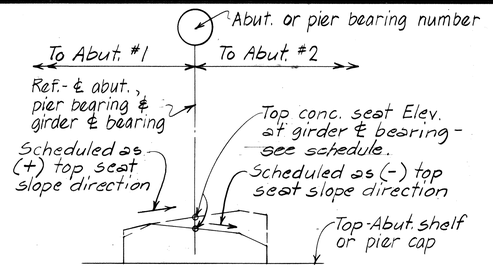

Note: Top seat slope direction normal to bearing line.

DIAGRAM - TOP OF SEAT SLOPE CONDITIONS

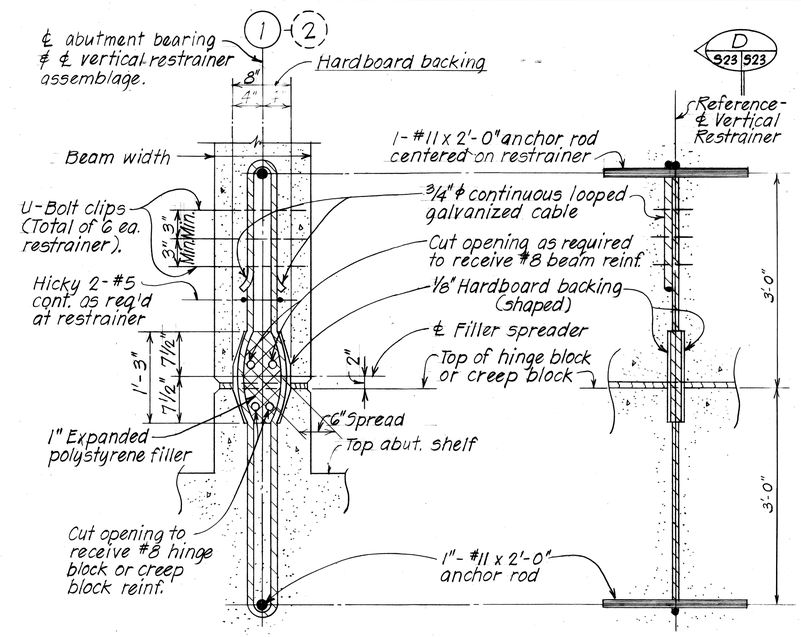

SECTION D S23 S23 ELEVATION

TYPICAL VERTICAL RESTRAINER DETAILS G 519 S23

Scale: 1" = 1'-0"

NOTE:

1. Restrainer assemblage incidental to concrete & will not be paid for separately.
2. Restrainer assemblage shall be securely held in place while placing concrete.

TYPICAL SEAT SECTION A S22 S23 S23

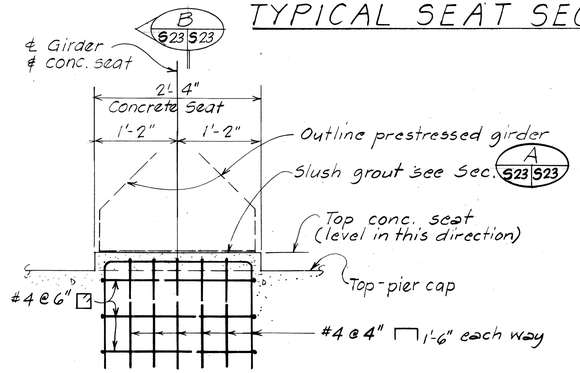

SEAT ELEVATION (AT FIXED BEARING)

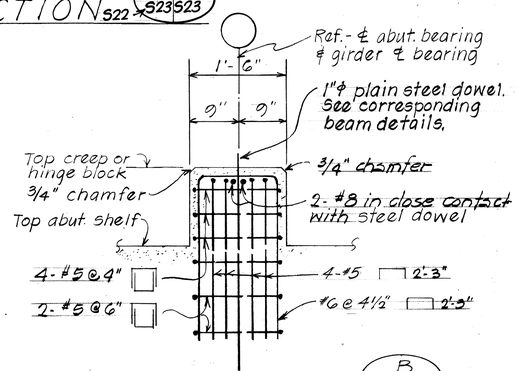

TYPICAL SECTION B S23 S23 (AT HINGE OR CREEP BLOCK)

Scale: 1" = 1'-0"

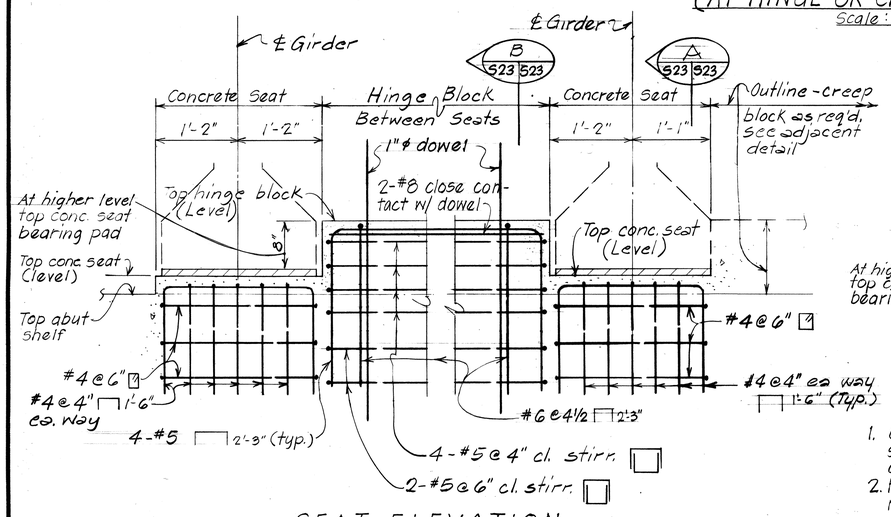

SEAT ELEVATION (AT HINGE BLOCK)

NOTE:

1. Creep block & conc. seat reinf. similar to adjacent hinge block detail.
2. For 1"ϕ dowel spacing see corresponding beam details.

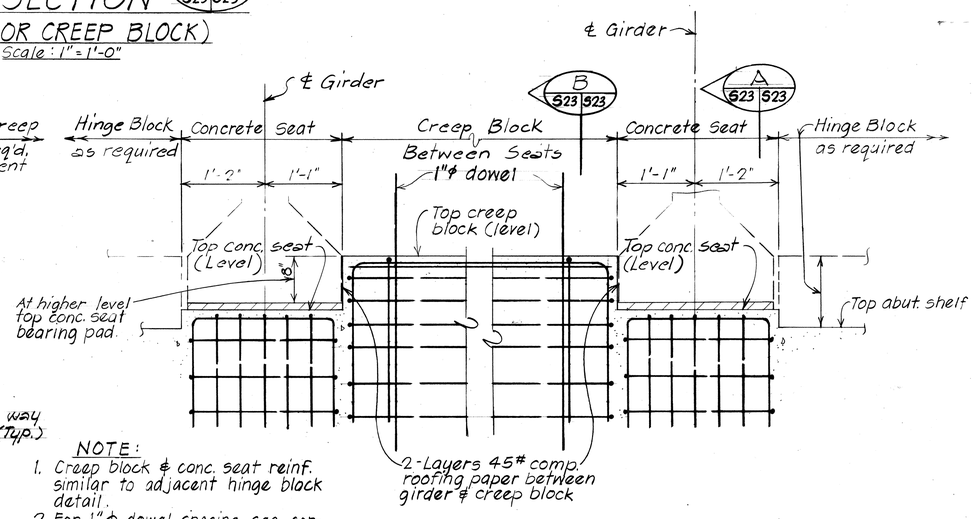

SEAT ELEVATION (AT CREEP BLOCK)

TYPICAL-CONCRETE SEATS, HINGE & CREEP BLOCKS DETAILS

Scale: 1" = 1'-0"

ORIGINAL PLAN	SURVEY PLOTTED BY	DATE
	DRAWN BY	
NOTE BOOK	TRACED BY	
	DESIGNED BY	
No.	QUANTITIES BY	
	CHECKED BY	

STATE OF HAWAII
DEPARTMENT OF TRANSPORTATION
LAND TRANSPORTATION FACILITIES DIVISION
ROUTE H-3 - KUOU STREAM BRIDGE

TYPICAL DETAILS
HINGE BLK, CREEP BLK & VERT. RESTRAINER
F.A.I. Proj. No. I-H3-1(50)
KANEOHE I.C. TO HALEKOU I.C.
Scale: As Noted Date: August 1987

SHEET No. S23 OF 35 SHEETS

104

TD 804-3

FED. ROAD DIST. NO.	STATE	FED. AID PROJ. NO.	FISCAL YEAR	SHEET NO.	TOTAL SHEETS
HAWAII	HAW.	I-H3-1(50)	1989	105	164

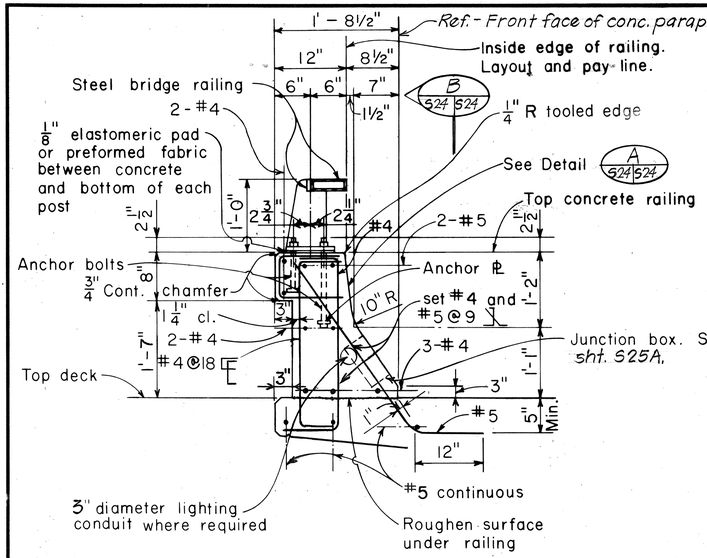

TYPICAL SECTION Not To Scale

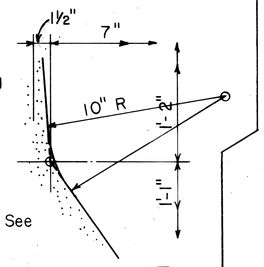

DETAIL A S24 S24

Scale: 3" = 1'-0"

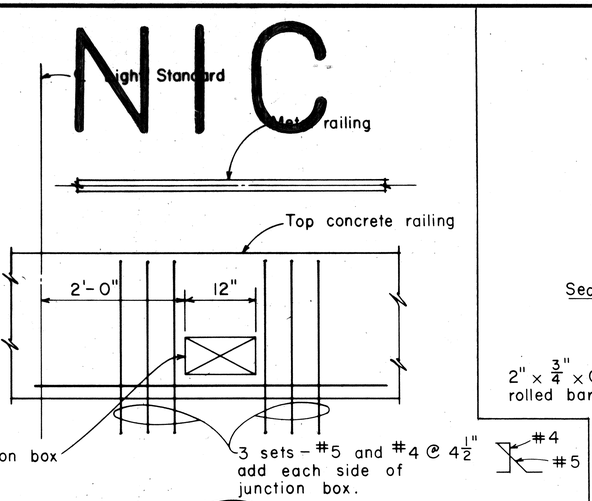

ELEVATION B S24 S24 ADDED REINFORCEMENT AT JUNCTION BOX

Scale: 1" = 1'-0"

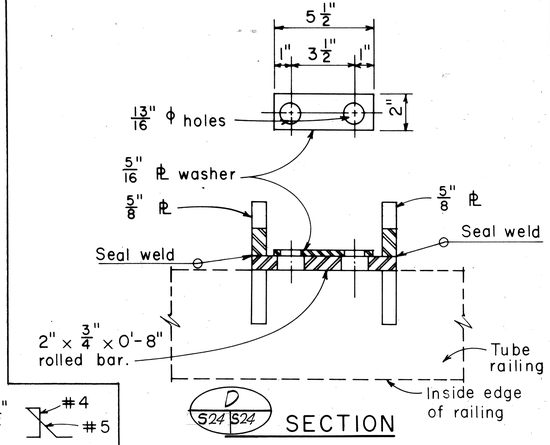

SECTION D S24 S24

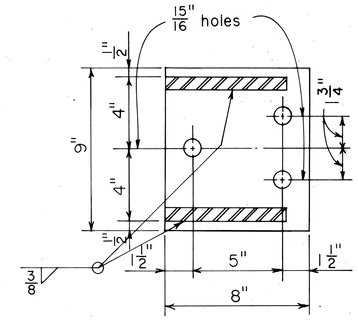

SECTION F S24 S24

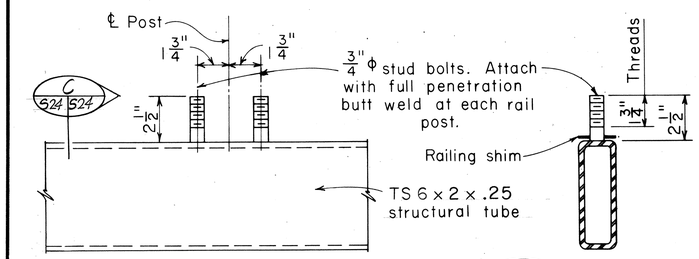

PLAN

SECTION C S24 S24

TUBE RAIL DETAILS

Scale: 3" = 1'-0"

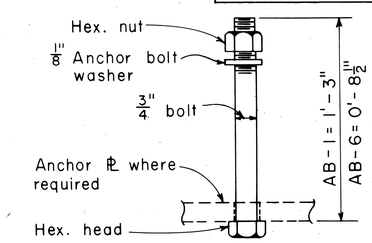

TYPICAL ANCHOR BOLT (AB) ASSEMBLY

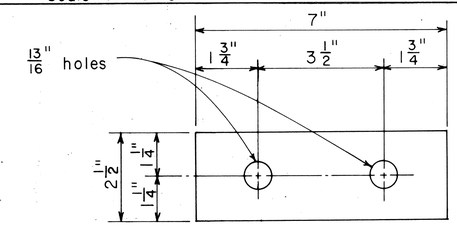

PLAN

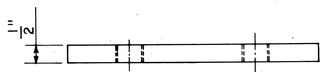

ELEVATION

TYPICAL ANCHOR PL DETAIL

Scale: Half Size

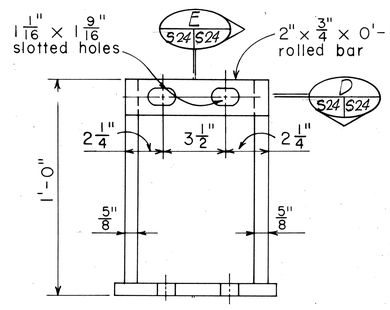

ELEVATION

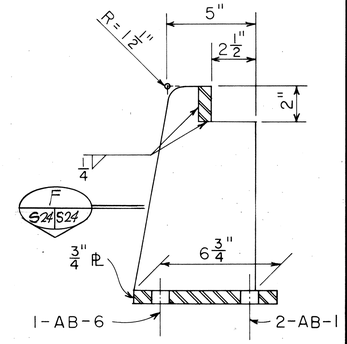

SECTION E S24 S24

RAIL POST DETAILS

Scale: 3" = 1'-0"

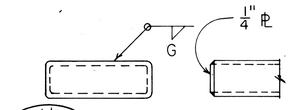

RAIL CAP H S24 S24

Scale: 3" = 1'-0"

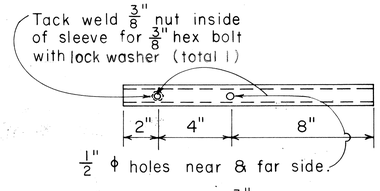

Sleeve formed of 3/16" PL, bent thus: for sliding fit inside of rail tube.

SLEEVE

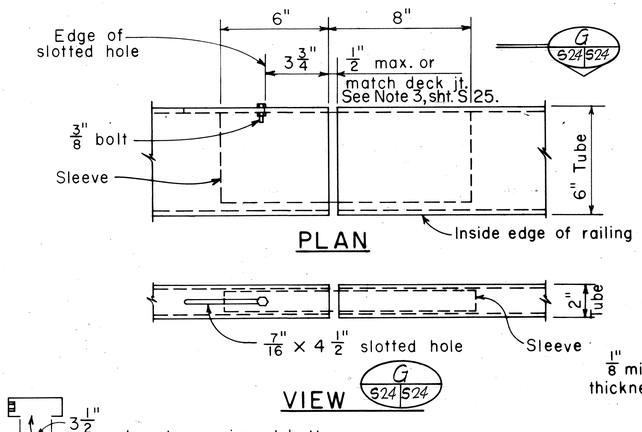

PLAN

VIEW G S24 S24

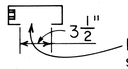

Locate opening at bottom surface of tubing.

TUBE SPLICE DETAIL

Scale: 3" = 1'-0"

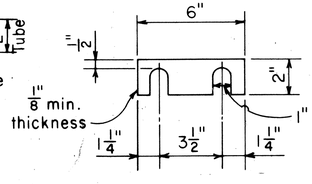

RAILING SHIM DETAIL

Scale: 3" = 1'-0"

DATE	REVISION
3/29/90	Addition of lighting standard & junction boxes.

STATE OF HAWAII
DEPARTMENT OF TRANSPORTATION
HIGHWAYS DIVISION

ROUTE H-3 - KUOU STREAM BRIDGE

TYPICAL DETAILS
STEEL BRIDGE RAIL ON PARAPET

F.A.I. Proj. No. I-H3-1(50)
KANEOHE I.C. TO HALEKOU I.C.

Scale: As Noted. Date: August 1987

SHEET No. S24 OF 35 SHEETS

ORIGINAL PLAN | SURVEY PLOTTED BY | DRAWN BY | TRACED BY | DESIGNED BY | QUANTITIES BY | CHECKED BY | NOTE BOOK No. | DATE

C.O. 105

105

FED. ROAD DIST. NO.	STATE	FED. AID PROJ. NO.	FISCAL YEAR	SHEET NO.	TOTAL SHEETS
HAWAII	HAW.	I-H3-1(50)	1989	106	164

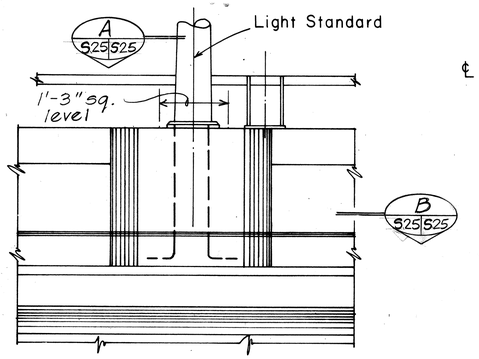

EXTERIOR ELEVATION

Scale: 3/4" = 1'-0"

NIC

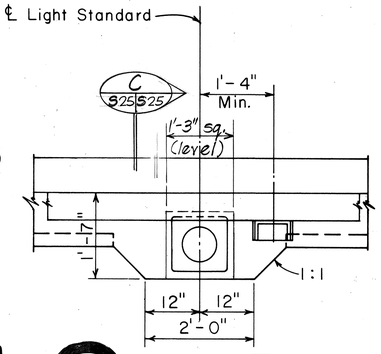

PLAN (A S25 S25)

Scale: 3/4" = 1'-0"

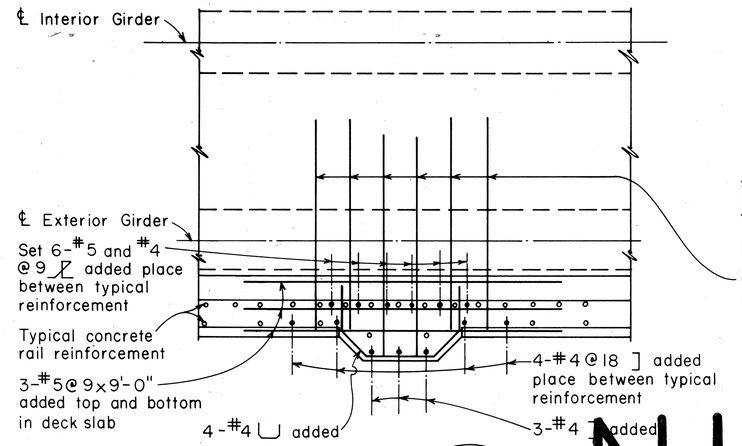

SECTION (B S25 S25)

Scale: 1/2" = 1'-0"

NIC

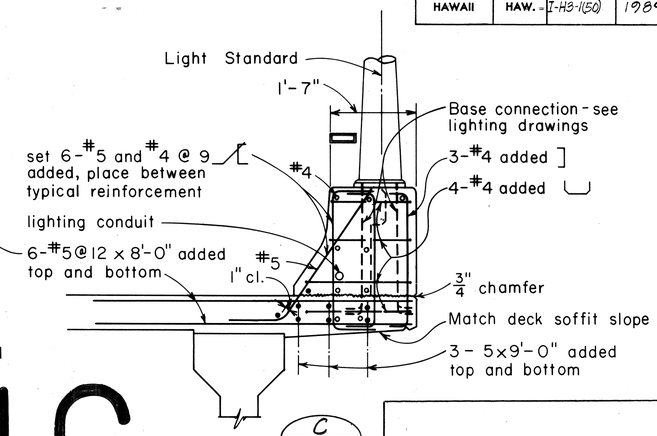

SECTION (C S25 S25)

Scale: 3/4" = 1'-0"

DETAILS AT LIGHT STANDARD

Scale: As Noted

NOTES

1. Tubing shall be shop bent to fit horizontal curve when radius is less than 950 ft.
2. Post shall be normal to grade.
3. All tubes shall be spliced in the panel spanning deck expansion joints. Increase joint width between tube to 1½" and increase sleeve length by 1". (See Tube Splice Detail.)
4. Tubing shall be continuous over not less than 3 posts except as noted on plans.
5. All exposed corner of metal railing shall be ground smooth.
6. Rail assemblage shall be galvanized after fabrication.
7. All anchor bolts, bolts, nuts, plates and washers shall be galvanized.
8. Welding shall meet the requirement of Section 501 of the Standard Specifications.
9. Material shall conform to the following requirements:
   a. Tubular steel rails ASTM A500 Grade B.
   b. Steel posts ASTM A36.
   c. Sleeves for tubular rails ASTM A36.
   d. Stud bolts ASTM A108 Grades 1015 to 1020.
   e. Anchor bolts, bolts, nuts and washers ASTM A325.
   f. Shims commercial quality galvanized steel.
   g. Sleeve bolts and nuts ASTM A108 Grades 1015 to 1020.
   h. Plates ASTM A36.

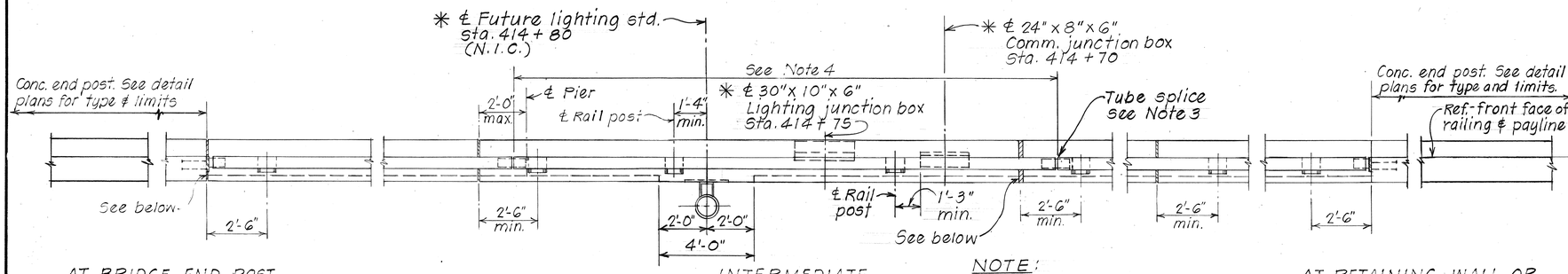

AT BRIDGE END POST

INTERMEDIATE

AT RETAINING WALL OR WING WALL END POST

NOTE:
* - See sht. S25A for details.

RAILING PLAN

Scale: 3/8" = 1'-0"

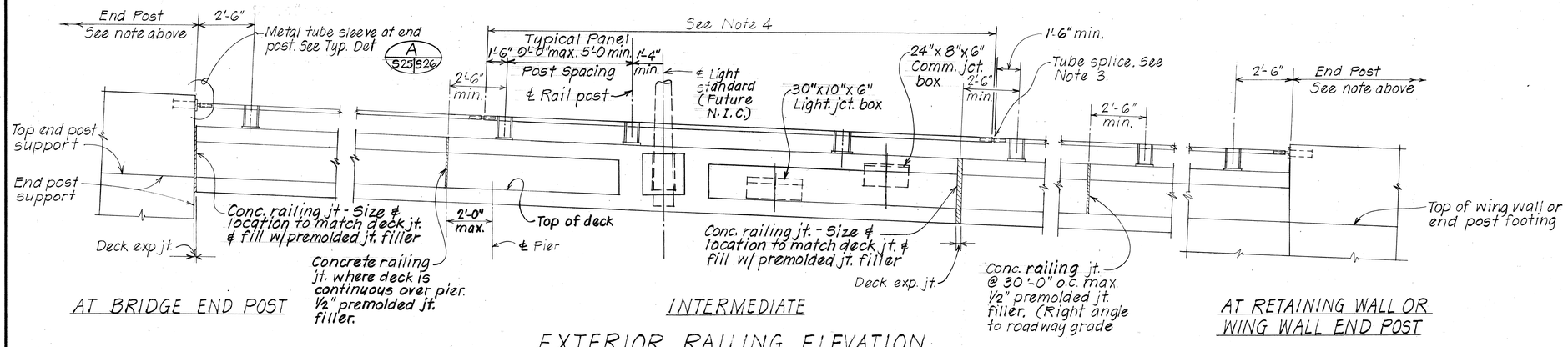

AT BRIDGE END POST

INTERMEDIATE

AT RETAINING WALL OR WING WALL END POST

EXTERIOR RAILING ELEVATION

Scale: 3/8" = 1'-0"

DATE	REVISION
3/29/90	Addition of ligthing standard & junction boxes.

STATE OF HAWAII
DEPARTMENT OF TRANSPORTATION
HIGHWAYS DIVISION

ROUTE H-3 - KUOU STREAM BRIDGE

TYPICAL DETAILS
STEEL BRIDGE RAIL ON PARAPET

F.A.I. Proj. No. I-H3-1(50)
KANEOHE I.C. TO HALEKOU I.C.

Scale: As Noted — Date: August 1987

SHEET No. S25 OF 35 SHEETS

ORIGINAL PLAN	SURVEY PLOTTED BY	DATE
	DRAWN BY	
	TRACED BY	
	DESIGNED BY	
NOTE BOOK	QUANTITIES BY	
No.	CHECKED BY	

K+E IMPERIAL™ LA 3207 TRACING CLOTH

C.O. 106

106

FED. ROAD DIST. NO.	STATE	FED. AID PROJ. NO.	FISCAL YEAR	SHEET NO.	TOTAL SHEETS
HAWAII	HAW.	I-H3-1(50)	1990	C.O.106S-1	164

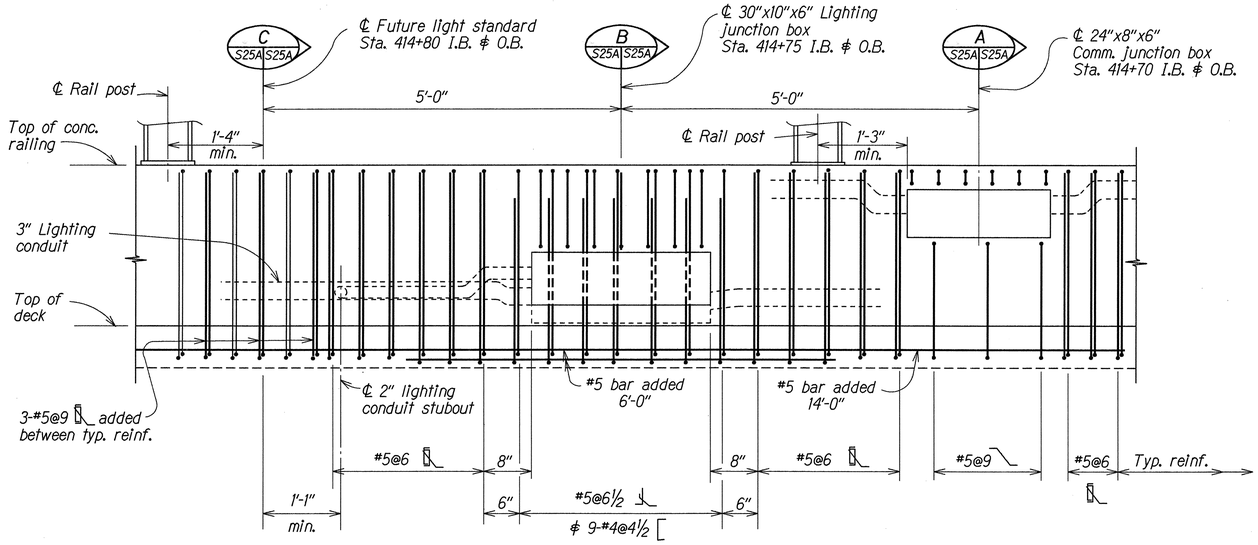

ELEVATION

Scale: 1"=1'-0"

NOTE: See sections for reinf not shown here.

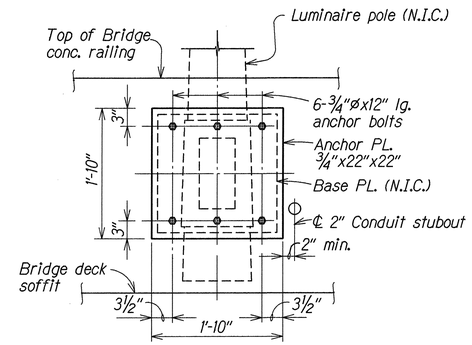

FRONT VIEW

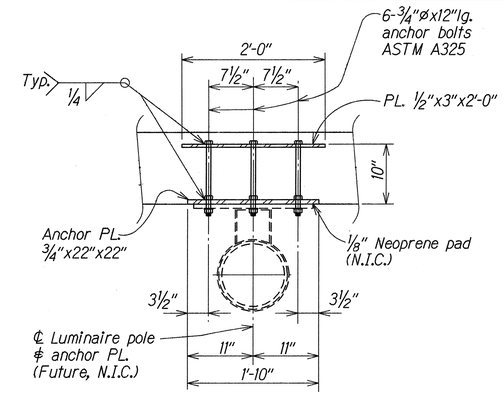

SECTION D S25A S25A

SUPPORT POLE CONNECTION DETAILS

Scale: 1"=1'-0"

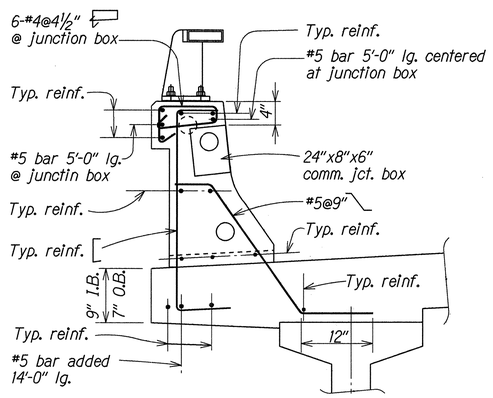

SECTION @ COMMUNICATIONS JUNCTION BOX A S25A S25A

Scale: 1"=1'-0"

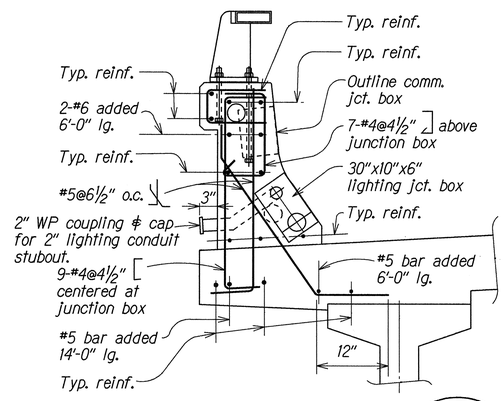

SECTION @ LIGHTING JUNCTION BOX B S25A S25A

Scale: 1"=1'-0"

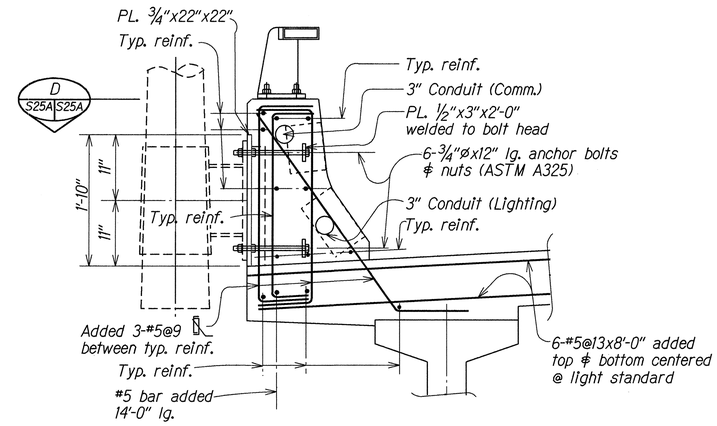

SECTION @ FUTURE LIGHT STANDARD C S25A S25A

Scale: 1"=1'-0"

DATE	REVISION
6/29/90	Addition of lighting standard and junction boxes

STATE OF HAWAII
DEPARTMENT OF TRANSPORTATION
HIGHWAYS DIVISION

ROUTE H-3 - KUOU STREAM BRIDGE

LIGHT STANDARD & JUNCTION BOX DETAILS

F.A.P. Proj. No. I-H3-1(50)
KANEOHE I.C. TO HALEKOU I.C.

Scale: As Noted — June 1990

SHEET No. S25A OF 35 SHEETS

C.O. 106S-1

ORIGINAL PLAN	SURVEY PLOTTED BY	DATE
	DRAWN BY LKA	June 1990
	TRACED BY	
NOTE BOOK	TRACED BY SA	June 1990
	DESIGNED BY	
	QUANTITIES BY	June 1990
No.	CHECKED BY SA/KK	June 1990

FED. ROAD DIST. NO.	STATE	FED. AID PROJ. NO.	FISCAL YEAR	SHEET NO.	TOTAL SHEETS
HAWAII	HAW.	I-H3-1(50)	1989	107	164

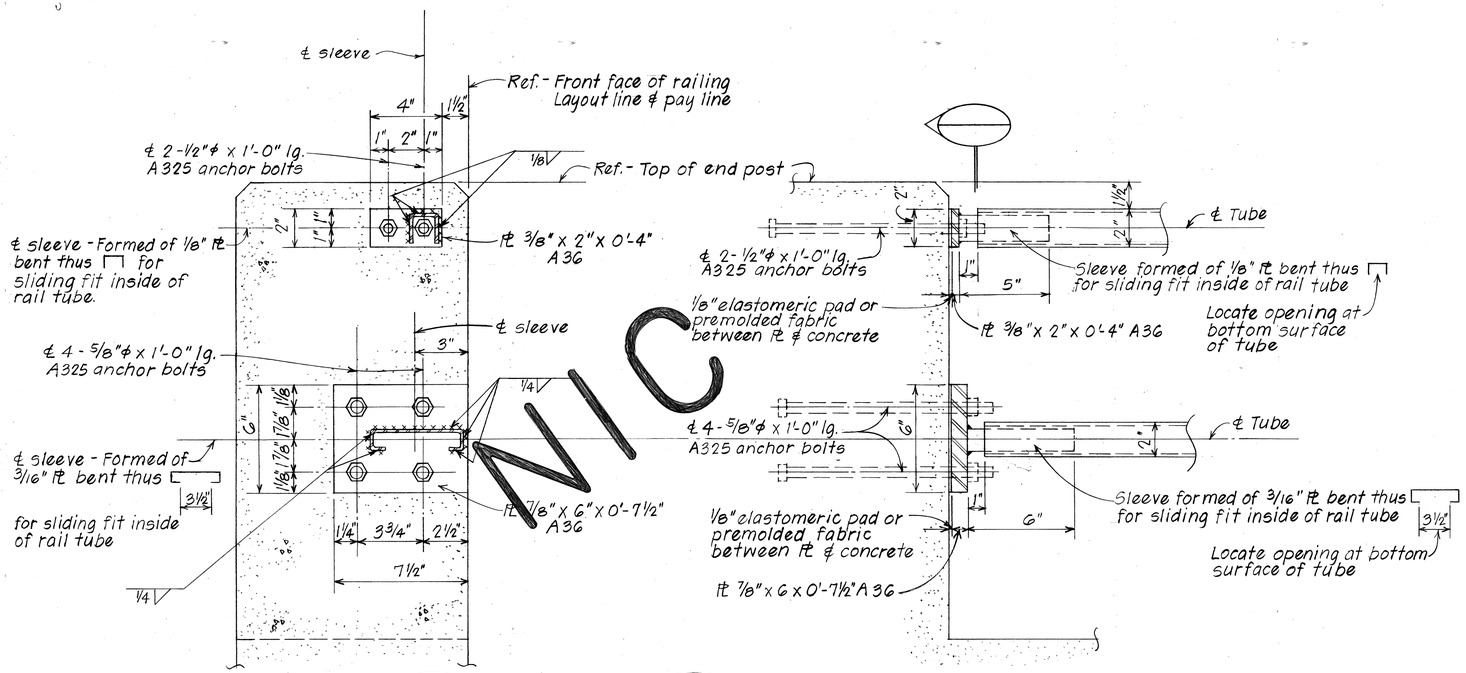

SECTION

DETAIL - TYP. METAL TUBE SLEEVE AT END POST

END POST CONNECTION FOR STEEL BRIDGE RAILING (TUBULAR) TWO RAIL COMBINATION TYPE

Scale : 3" = 1'-0"

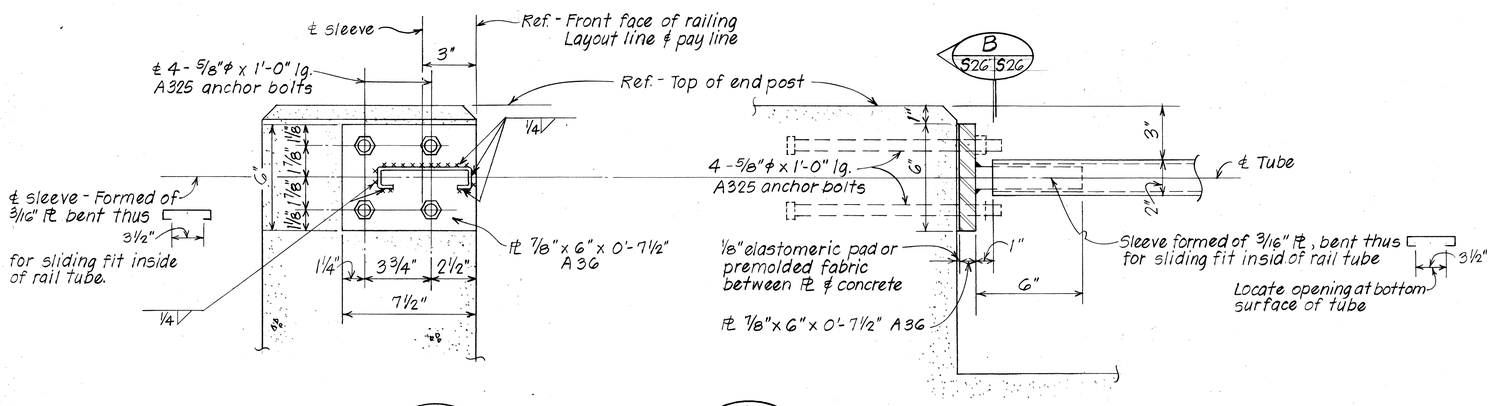

SECTION B S26 S26

A S26 S26 DETAIL - TYP. METAL TUBE SLEEVE AT END POST

S25, S27

END POST CONNECTION FOR STEEL BRIDGE RAILING (TUBULAR) ONE RAIL COMBINATION TYPE

Scale : 3" = 1'-0"

ORIGINAL PLAN		DATE
	SURVEY PLOTTED BY	
	DRAWN BY	
	TRACED BY	
NOTE BOOK	DESIGNED BY	
	QUANTITIES BY	
No.	CHECKED BY	

STATE OF HAWAII
DEPARTMENT OF TRANSPORTATION
LAND TRANSPORTATION FACILITIES DIVISION

ROUTE H-3 - KUOU STREAM BRIDGE

TYPICAL DETAILS
STEEL BRIDGE RAIL ON PARAPET

F.A.I. Proj. No. I-H3-1(50)
KANEOHE I.C. TO HALEKOU I.C.

Scale : As Noted Date : August 1987

SHEET No. S26 OF 35 SHEETS

FED. ROAD DIST. NO.	STATE	FED. AID PROJ. NO.	FISCAL YEAR	SHEET NO.	TOTAL SHEETS
HAWAII	HAW.	I-H3-1(50)	1988	108	164

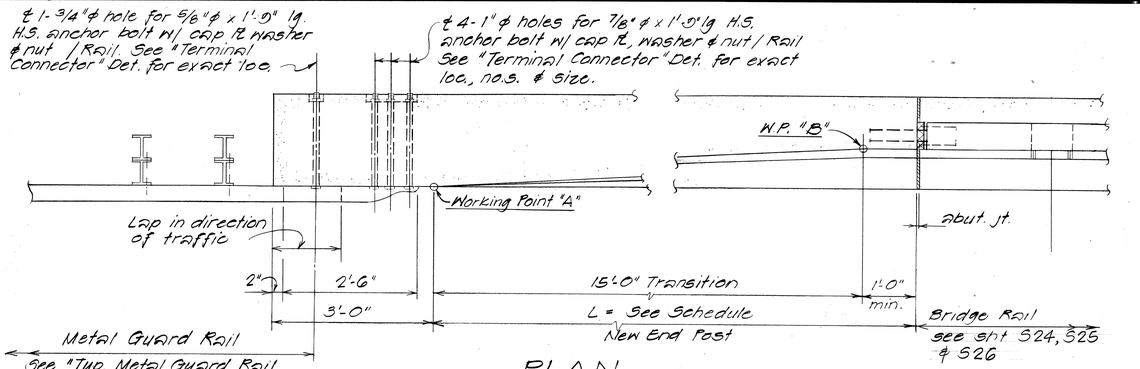

PLAN

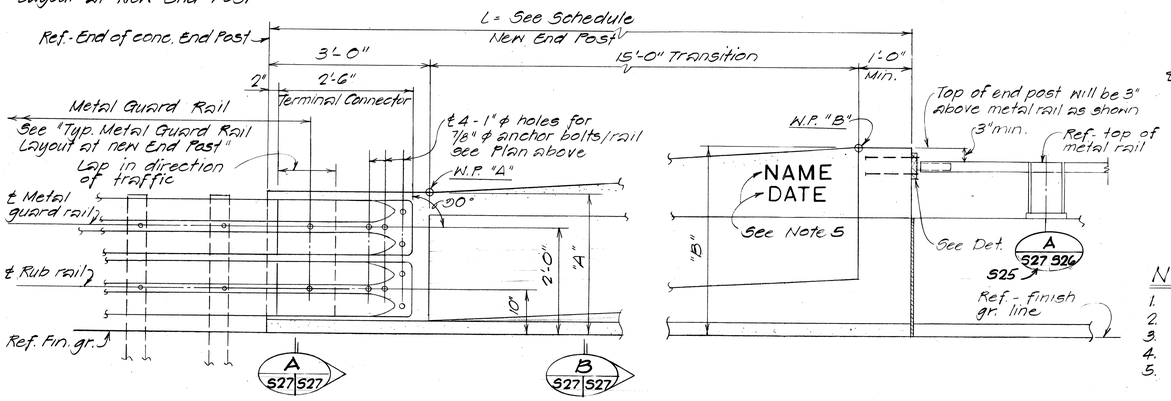

ELEVATION

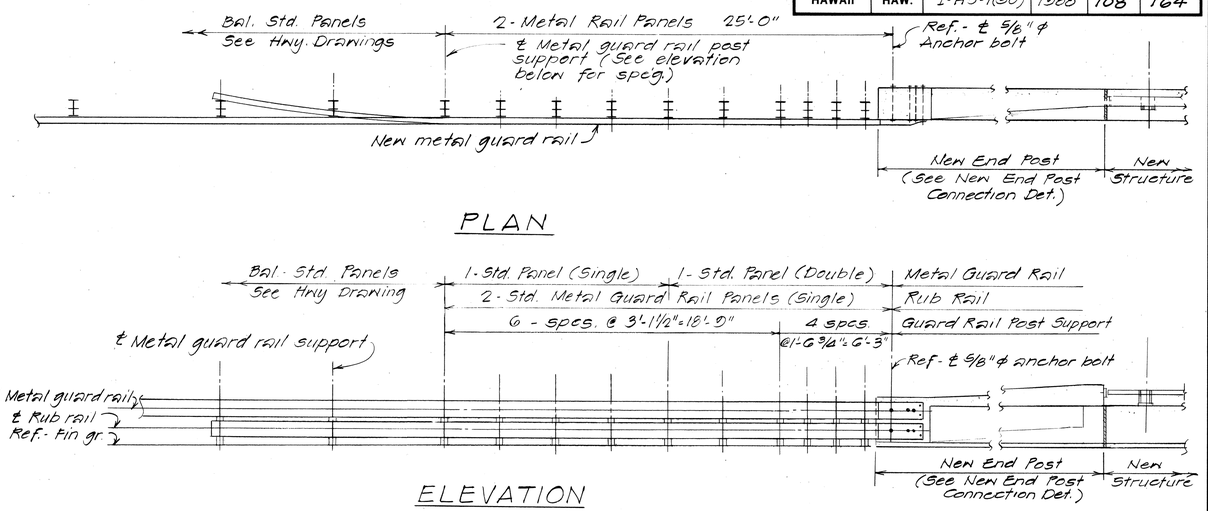

PLAN

ELEVATION

TYPICAL METAL GUARD RAIL LAYOUT AT NEW END POST

Scale: 1/4" = 1'-0"

NOTES:

1. All anchor bolts shall be high strength bolts conforming to the requirements of ASTM A325 & Galv.
2. "Terminal Connector" including anchor bolts, nuts and washers, shall be galvanized.
3. "Terminal Connector" shall be fabricated from 10 gage steel conforming to the requirements of AASHTO M180.
4. First 25'-0" of guard rail and rub rail adjoining "Terminal Connector" shall be galvanized steel.
5. Place name & date of structure as shown. For location, see "Layout Plan" on contract drawing. Date will be year structure is completed. For letter size and detail see Standard Plans B-01.

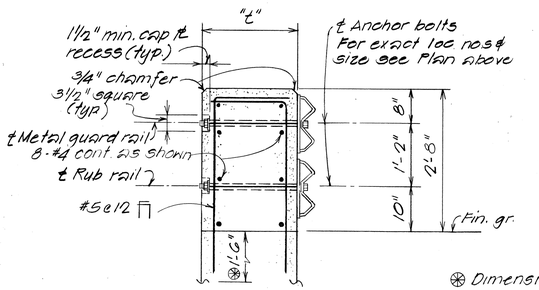

SECTION A S27 S27

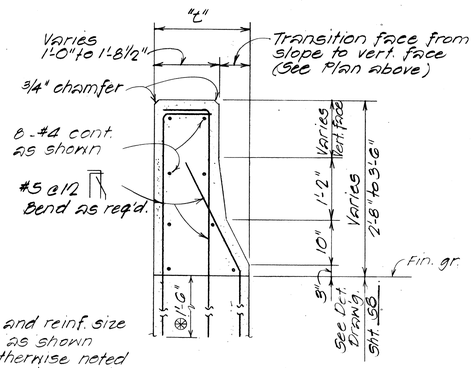

SECTION B S27 S27

⊛ Dimensions and reinf. size and spacing as shown except as otherwise noted on detail drawings.

END POST DIMENSION SCHEDULE				
STRUCTURE	⊛ "L"	"t"	"A"	"B"
Kuau Stream Bridge	10'-0"	1'-8 1/2"	2'-8"	3'-6"

TYPICAL END POST CONNECTION DETAIL

Scale: 3/4" = 1'-0"

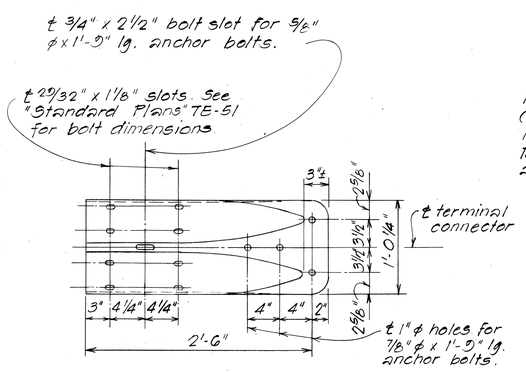

TERMINAL CONNECTOR DETAIL N.T.S.

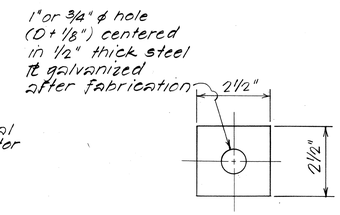

TYPICAL CAP ⅊ DETAIL

N.T.S.

STATE OF HAWAII
DEPARTMENT OF TRANSPORTATION
HIGHWAYS DIVISION

TYPICAL DETAILS

METAL GUARD RAIL CONNECTION AT CONCRETE END POST

F.A.I. PROJ. NO. I-H3-1(50)

Scale: As Shown Date: Aug. 1987

SHEET No. 527 OF 35 SHEETS

ORIGINAL PLAN | SURVEY PLOTTED BY | DRAWN BY | TRACED BY | DESIGNED BY | QUANTITIES BY | CHECKED BY | DATE | NOTE BOOK | No.

FED. ROAD DIST. NO.	STATE	FED. AID PROJ. NO.	FISCAL YEAR	SHEET NO.	TOTAL SHEETS
HAWAII	HAW.	I-H3-1(50)	1989	109	164

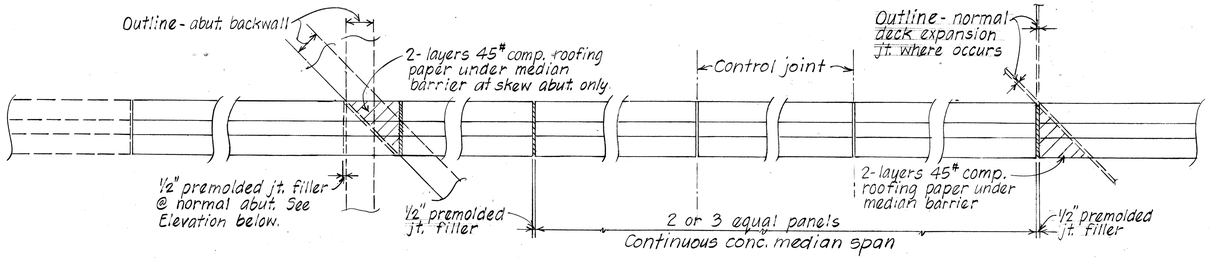

AT BRIDGE END — INTERMEDIATE

MEDIAN BARRIER LAYOUT PLAN

Scale: 3/8" = 1'-0"

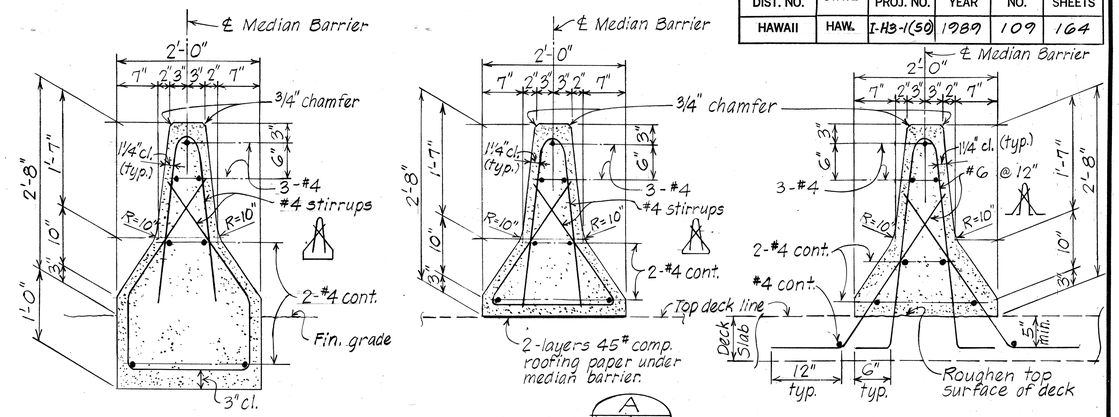

TYPE 4E — SECTION A 528|528 — TYPE 4F

TYPICAL SECTIONS - MEDIAN BARRIER

Scale: 1" = 1'-0"

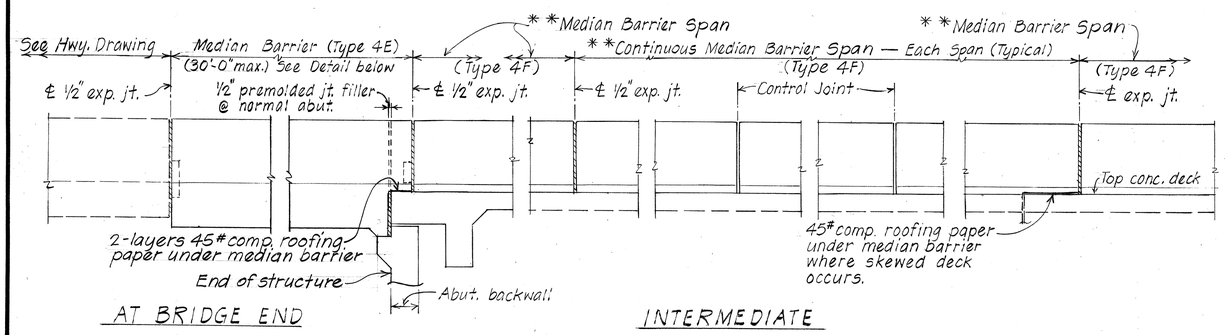

AT BRIDGE END — INTERMEDIATE

MEDIAN BARRIER ELEVATION

Scale: 3/8" = 1'-0"

** Median barrier shall be constructed on deck slope with 2 or 3 equal panels of 30'-0" max. length within each median span. Locate control joints at interior panel points (typical). Concrete median barrier to receive class 2 rubbed finish. See Specifications.

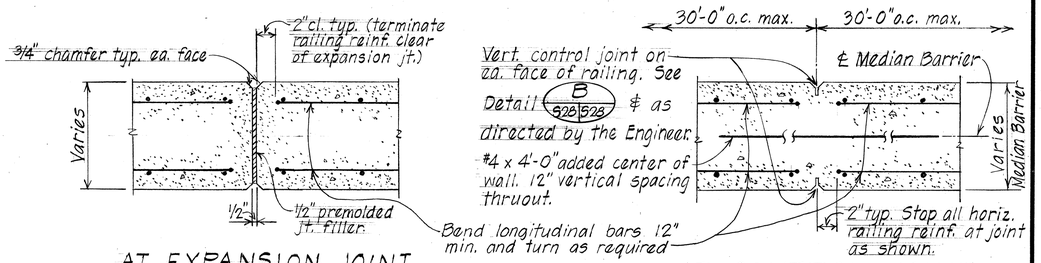

AT EXPANSION JOINT — AT CONTROL JOINT

TYPICAL JOINT DETAILS - TYPE 4F MEDIAN BARRIER

Scale: 1 1/2" = 1'-0"

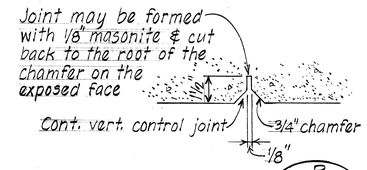

DETAIL B 528|528

Scale: 3" = 1'-0"

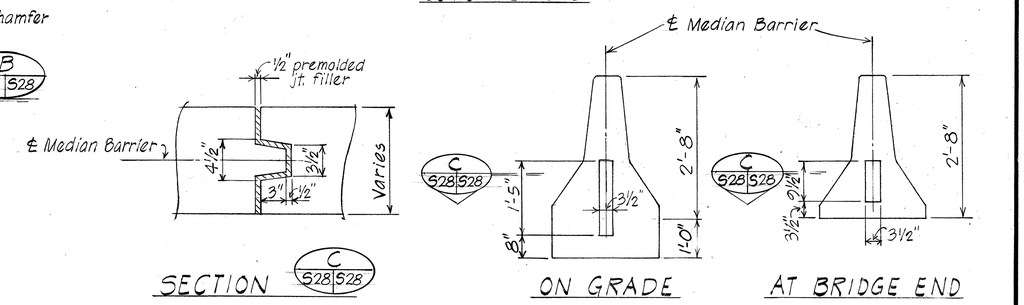

SECTION C 528|528 — ON GRADE — AT BRIDGE END

TYPICAL EXPANSION JOINT DETAILS - TYPE 4E MEDIAN BARRIER

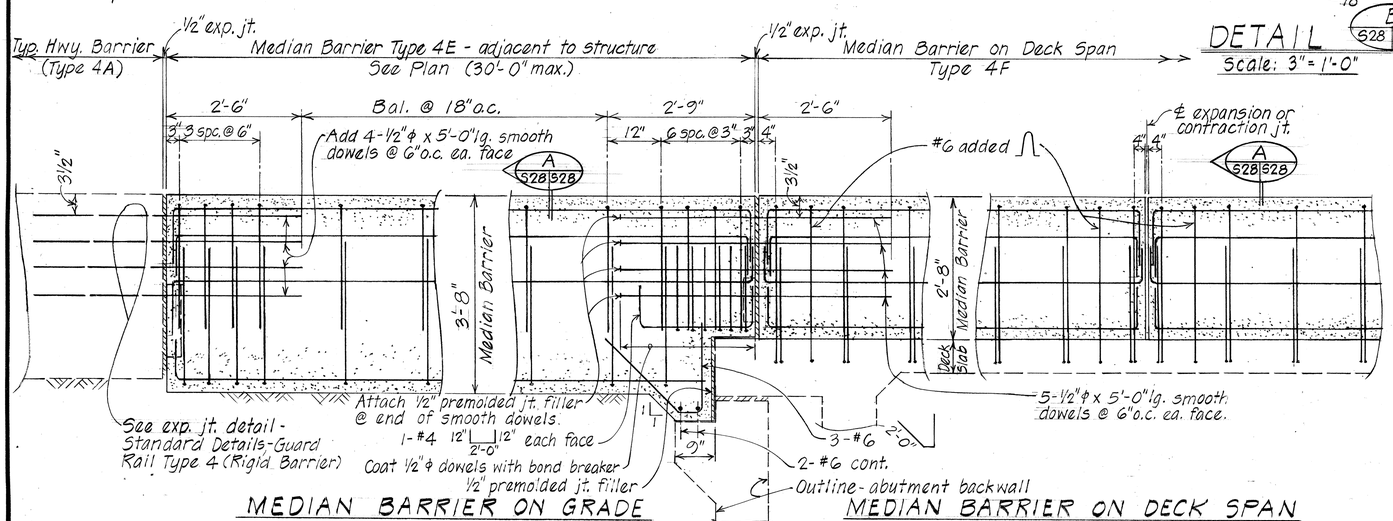

MEDIAN BARRIER ON GRADE — MEDIAN BARRIER ON DECK SPAN

ELEVATION - TYPICAL MEDIAN BARRIER

Scale: 3/4" = 1'-0"

ORIGINAL PLAN	SURVEY PLOTTED BY	DATE
	SURVEY BY	"
	TRACED BY	"
NOTE BOOK	DESIGNED BY M.Y.	"
	QUANTITIES BY	"
No.	CHECKED BY N.Y.	"

STATE OF HAWAII
DEPARTMENT OF TRANSPORTATION
LAND TRANSPORTATION FACILITIES DIVISION

ROUTE H-3 - KUOU STREAM BRIDGE

TYPICAL DETAILS
CONC. MEDIAN BARRIER - TRAFFIC TYPE

F.A.I. Proj. No. I-H3-1(50)
KANEOHE I.C. TO HALEKOU I.C.

Scale: As Shown — Date: August 1987

SHEET No. 528 OF 35 SHEETS

FED. ROAD DIST. NO.	STATE	FED. AID PROJ. NO.	FISCAL YEAR	SHEET NO.	TOTAL SHEETS
HAWAII	HAW.	I-H3-1(50)	1989	ADD. 110	164

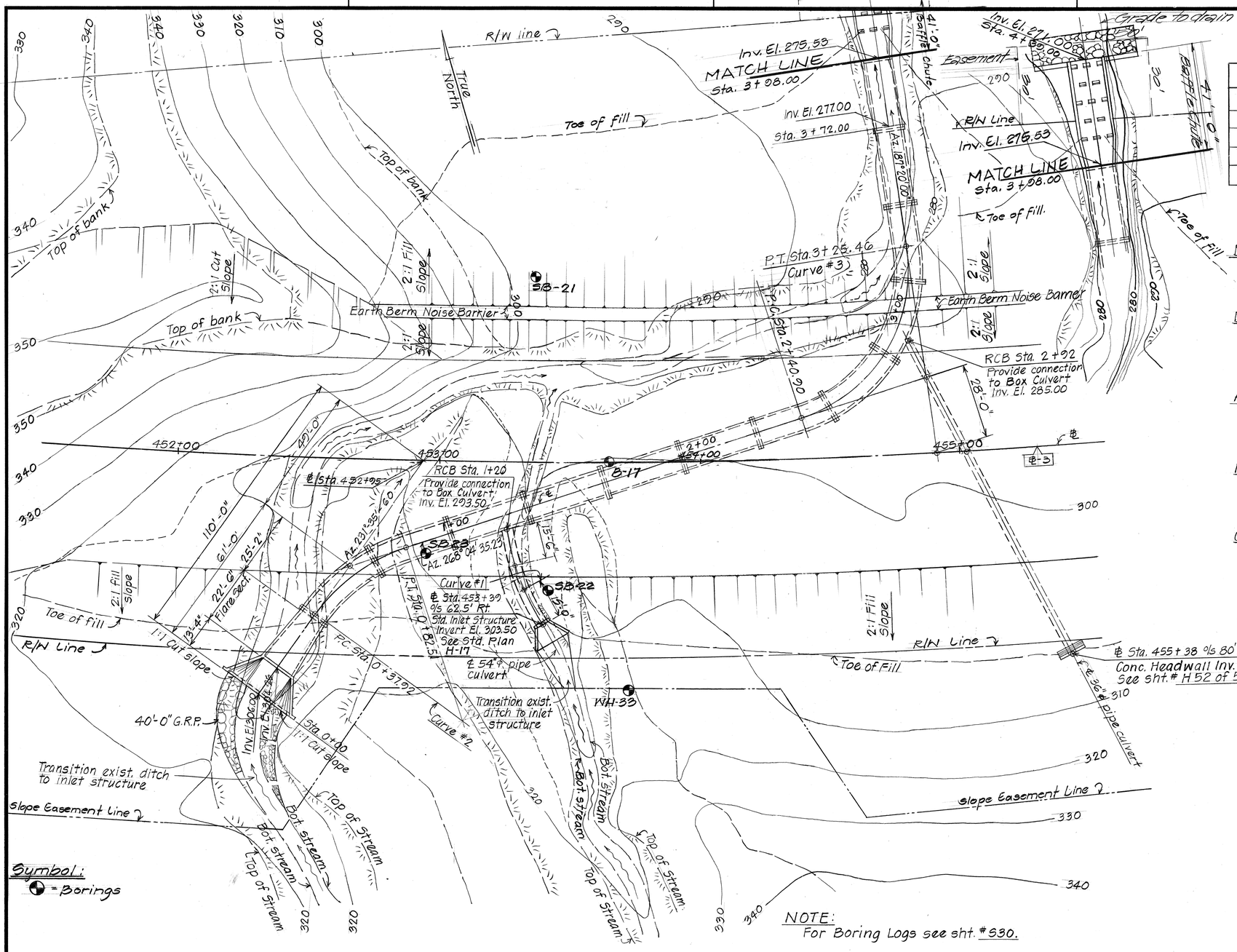

NOTE:
For Boring Logs see sht. # S30.

CURVE DATA

	℄-3	Curve #1	Curve #2	Curve #3	
△	85° 44' 59.64"	15° 40' 00"	36° 29' 35.23"	80° 44' 35.23"	
R	2600.00'	36.34	70.00'	60.00'	
T	2413.95'	5.00	23.08'	51.01'	
Lc	3891.21'	9.94	44.58'	84.55'	

GENERAL STRUCTURAL NOTES

Design Specifications:
AASHTO Standard Specifications for Highway Bridges (13th edition), including subsequent Interim Specifications.

Design Loads:
Dead Load: Earth Load - 120 pcf
Equivalent fluid pressure - 37 pcf
Live Load: HS-20-44

Allowable Design Stresses:
1. Reinforced concrete: fc = 1,200 psi
2. Reinforcing steel: fs = 20,000 psi

Materials:
1. Reinforced concrete - Class A
2. Reinforcing steel - ASTM A615, Grade 40

Construction Requirements:
1. Refer to Standard Specifications for Road and Bridge Construction (Hawaii 1985) and Special Provisions.
2. Except as noted otherwise on drawings, all exterior corners and re-entrant angles in concrete work shall be chamfered 3/4" x 3/4".

DATE	REVISION
8/10/90	GRP Lining for Outlet Structure at ℄ Sta. 453+87 Lt. (C.O. #14)
3/2/89	Revised plan sheet reference numbers

STATE OF HAWAII
DEPARTMENT OF TRANSPORTATION
LAND TRANSPORTATION FACILITIES DIVISION

9'-0" x 8'-0" CONC BOX CULVERT
AT STA. 453+87
LAYOUT PLAN-CONC. BOX CULVERT

F.A.I. Proj. No. I-H3-1(50)
KANEOHE I.C. TO HALEKOU I.C.

Scale: As Noted Date: August 1987

SHEET No. S29 OF 35 SHEETS

ORIGINAL PLAN	SURVEY PLOTTED BY	M.A. DATE 7/83
	DRAWN BY	L.C. " 7/83
	TRACED BY	D.G.O. S.A. " 7/83
NOTE BOOK	DESIGNED BY	L.M. " 7/83
	QUANTITIES BY	" 7/83
No.	CHECKED BY	D.G.O. " 7/83

LAYOUT PLAN - 9'-0" x 8'-0" CONC. BOX CULVERT AT STA. 453+87

Scale : 1" = 20'-0"

"AS BUILT"

ADD. 110

110

FED. ROAD DIST. NO.	STATE	FED. AID PROJ. NO.	FISCAL YEAR	SHEET NO.	TOTAL SHEETS
HAWAII	HAW.	I-H3-1(50)	1989	111	164

Boring B-17, surface El. 289.3'

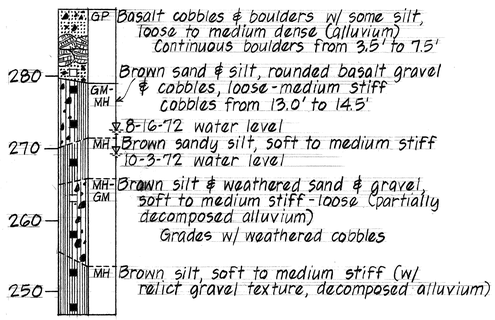

Boring completed @ 42.0' on 8-16-72

Boring SB-21, surface El. 305.9'

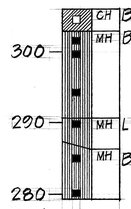

Boring completed @ 26.3' on 8-4-72
No water encountered

Boring SB-22, surface El. 307.8'

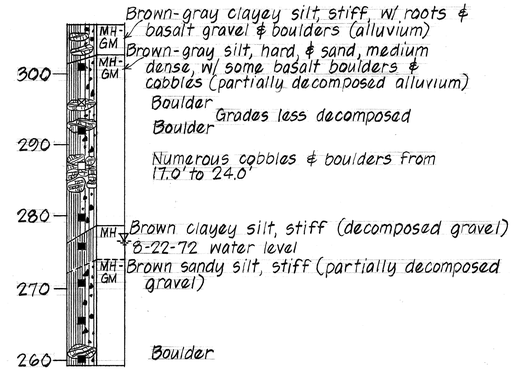

Boring completed @ 47.0' on 8-22-72
No water encountered to 35' on 9-26-72

Boring SB-23, surface El. 308.7'

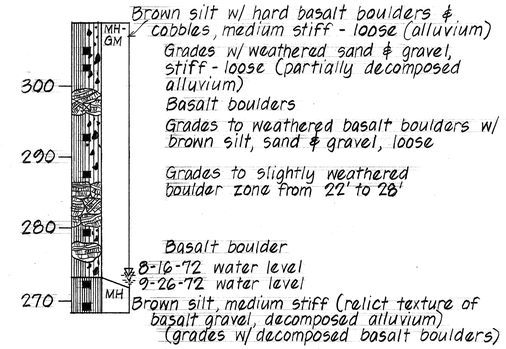

Boring completed @ 40.0' on 8-16-72

Boring WH-33, surface El. 315.0'

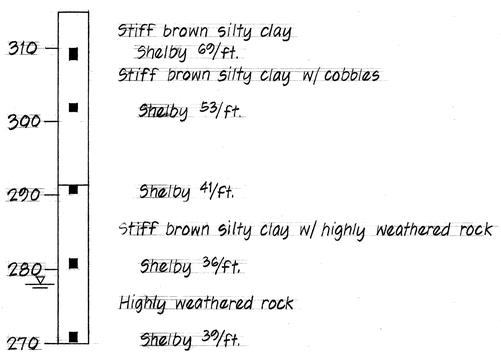

ORIGINAL PLAN	SURVEY PLOTTED BY	DATE
	DRAWN BY G.H.	10/83
	TRACED BY " "	
NOTE BOOK	DESIGNED BY " "	
	QUANTITIES BY " "	
No.	CHECKED BY " "	

STATE OF HAWAII
DEPARTMENT OF TRANSPORTATION
LAND TRANSPORTATION FACILITIES DIVISION

9'-0" x 8'-0" CONC. BOX CULVERT
AT STA. 453+87
BORING LOGS

F.A.I. Proj. No. I-H3-1(50)
KANEOHE I.C. TO HALEKOU I.C.

Scale: As Noted Date: August 1987

SHEET No. S30 OF 35 SHEETS

FED. ROAD DIST. NO.	STATE	FED. AID PROJ. NO.	FISCAL YEAR	SHEET NO.	TOTAL SHEETS
HAWAII	HAW.	I-H3-1(50)	1989	112	164

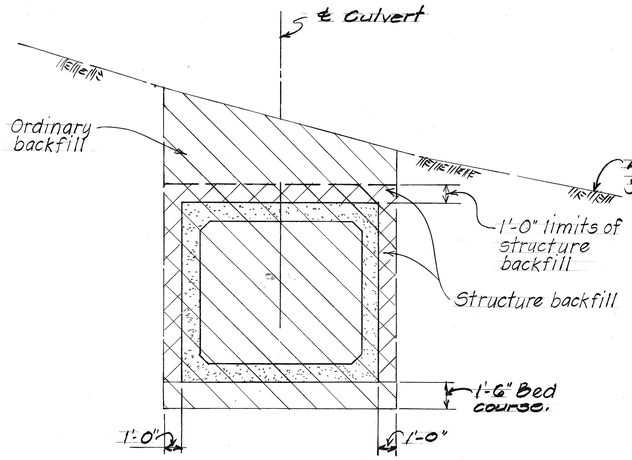

AT CULVERT

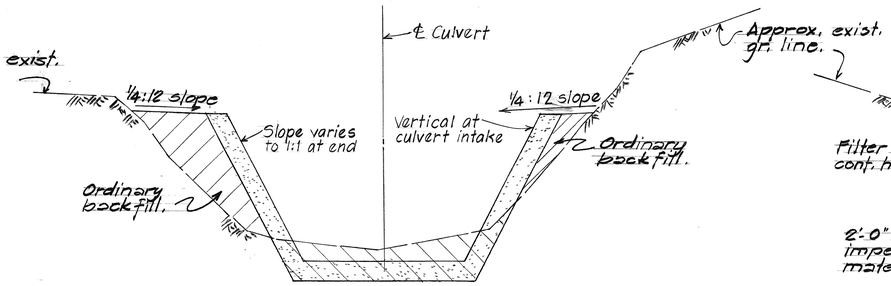

AT SLOPING CONC. INLET LINING

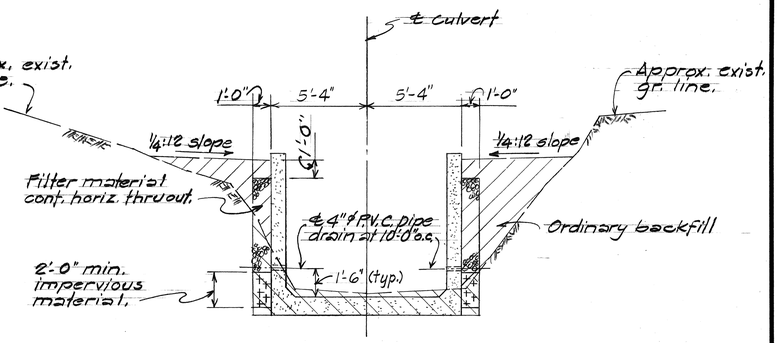

AT BAFFLE CHUTE

NOTE:

1. Hatched area shown thus \\\\ denotes limits of structure excavation payline. All other excavation shall be roadway excavation.
2. Hatched area shown thus //// denotes limits of structure backfill.

Date	Revision
8/13/90	Additional GRP for Transition into 9'x8' Box Culvert Inlet Structure at Sta. 432+50± Rt. (CCO #14)

STATE OF HAWAII
DEPARTMENT OF TRANSPORTATION
LAND TRANSPORTATION FACILITIES DIVISION

9'-0"x 8'-0" CONC. BOX CULVERT
AT STA. 453+87

TYPICAL CONC. BOX CULVERT
STRUCTURE EXC. & BACKFILL PAY LIMITS

F.A.I. Proj. No. I-H3-1(30)
KANEOHE I.C. TO HALEKOU I.C.

Scale: As Noted Date: August 1987

SHEET No. 531 OF 35 SHEETS

ORIGINAL PLAN		
	SURVEY PLOTTED BY	DATE
	DRAWN BY S.Y.	" 7/83
	TRACED BY	" "
NOTE BOOK	DESIGNED BY D.C.O.	" 7/83
	QUANTITIES BY E.M.	" 7/83
No.	CHECKED BY D.C.O.	" 7/83

"AS BUILT"

112

112

FED. ROAD DIST. NO.	STATE	FED. AID PROJ. NO.	FISCAL YEAR	SHEET NO.	TOTAL SHEETS
HAWAII	HAW.	I-H3-1(50)	1989	ADD.113	164

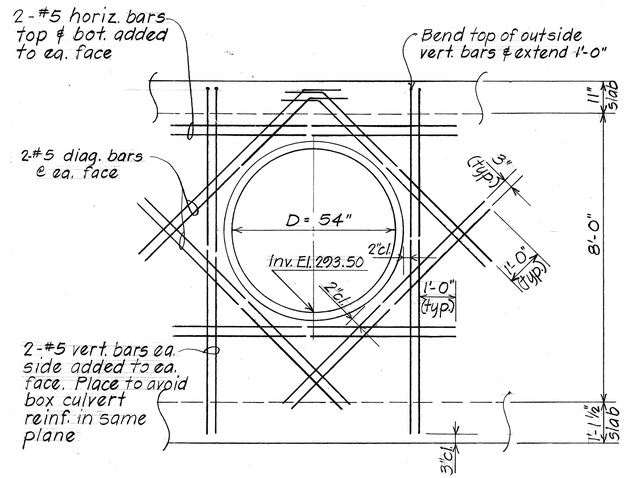

AT 54" PIPE OPENING

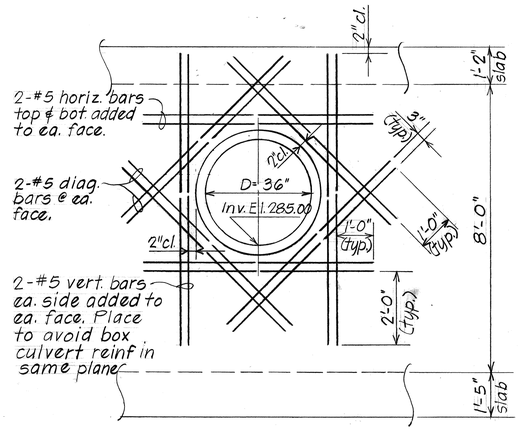

AT 36" PIPE OPENING

TYPICAL DETAIL - SHOWING ADDED REINF. AT PIPE OPENING Scale: ½"=1'-0"

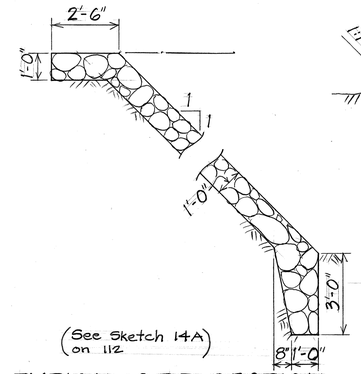

TYPICAL G.R.P. SECTION @ INLET

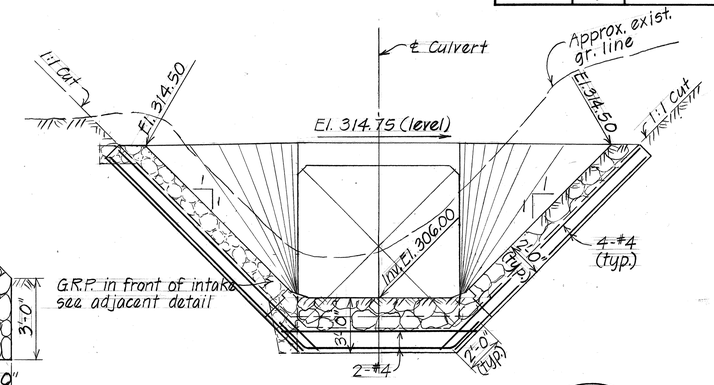

INLET ELEVATION (A / S32 | S32)

Scale: 1/4"=1'-0"

ESTIMATED QUANTITIES

ITEM NO.	ITEM	UNIT	QUANTITIES
206.4201	Structure Excavation for Box Culvert, Sloped Concrete Lined Inlet, Concrete Baffle Chute Outlet	Cu. Yd.	2,530 C.Y.
206.7001	Structure Backfill for Box Culvert, Sloped Concrete Lined Inlet, Concrete Baffle Chute Outlet.	Cu. Yd.	510 C.Y.
206.8000	Filter Material	Cu. Yd.	26 C.Y.
207.0100	Ditch and Channel Excavation	Cu. Yd.	81 C.Y.
503.0140	Concrete in Sloped Concrete Lined Inlet and Concrete Baffle Chute Outlet.	Lump Sum	80 C.Y.
503.1030	Concrete in Box Culvert	Lump Sum	640 C.Y.
602.0032	Reinforcing Steel in Box Culvert, Sloped Concrete Lined Inlet and Concrete Baffle Chute Outlet.	Lump Sum	103,000 LBS.
603.0010	Bed Course Material for Culvert	Cu. Yd.	283 C.Y.
612.0203	Grouted Rubble Slope Protection for 9'-0"x8'-0" Box Culvert Inlet	Cu. Yd.	15 C.Y.

Note:
Estimated quantities for 36" & 54" pipe culverts & their inlets - see Sht. # H1 of 54

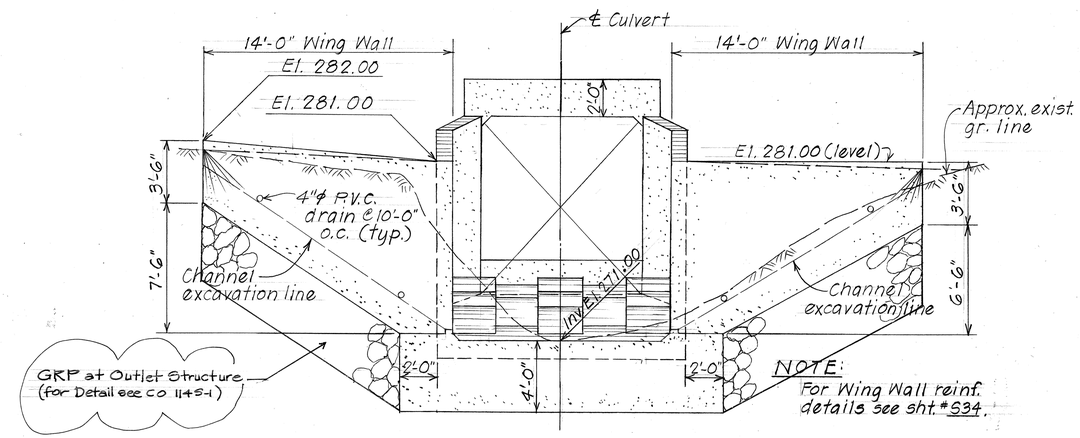

OUTLET ELEVATION (B / S32 | S32)

Scale: 1/4"=1'-0"

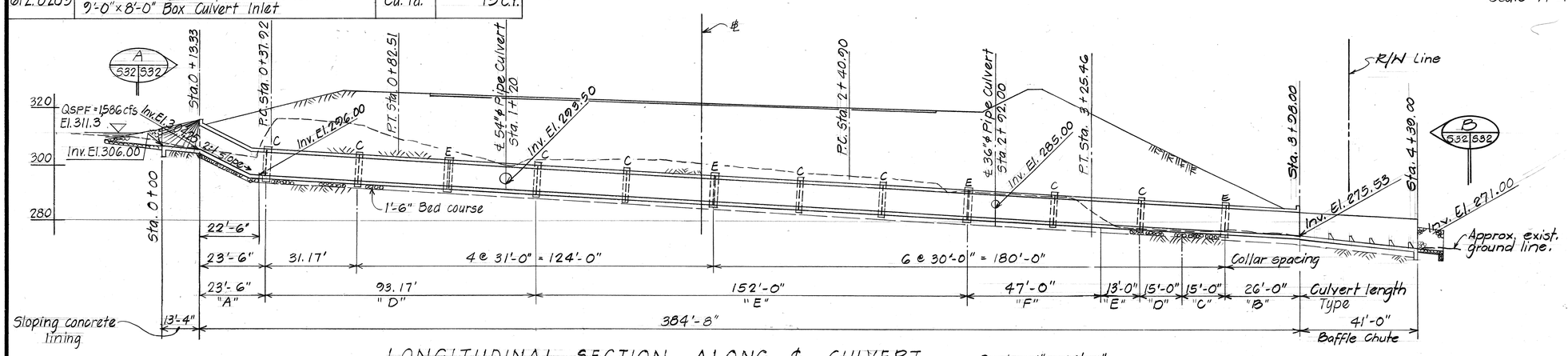

LONGITUDINAL SECTION ALONG ℄ CULVERT Scale: 1" = 20'-0"

ORIGINAL PLAN		DATE
SURVEY PLOTTED BY		
DRAWN BY	L.M.A.	7/83
TRACED BY	"	7/83
NOTE BOOK	DESIGNED BY S.A.	7/83
	QUANTITIES BY T.M.	7/83
No.	CHECKED BY D.C.G.	7/83

DATE	REVISION
8/18/90	Additional GRP for Transition into 9'x8' Box Culvert Inlet Structure at Sta. 452+50± Rt. (CCO #14)
3/2/89	Revised plan sheet reference number

STATE OF HAWAII
DEPARTMENT OF TRANSPORTATION
LAND TRANSPORTATION FACILITIES DIVISION

9'-0"x 8'-0" CONC. BOX CULVERT
AT STA. 453+87
LONGITUDINAL CULVERT SECTION
INTAKE & OUTLET ELEV. - EST. QUANTITIES
F.A.I. Proj. No. I-H3-1(50)
KANEOHE I.C. TO HALEKOU I.C.

Scale: As Noted Date: August 1987

SHEET No. S32 OF 35 SHEETS

"AS BUILT"

ADD.113

113

FED. ROAD DIST. NO.	STATE	FED. AID PROJ. NO.	FISCAL YEAR	SHEET NO.	TOTAL SHEETS
HAWAII	HAW.	I-H3-1(50)	1989	114	164

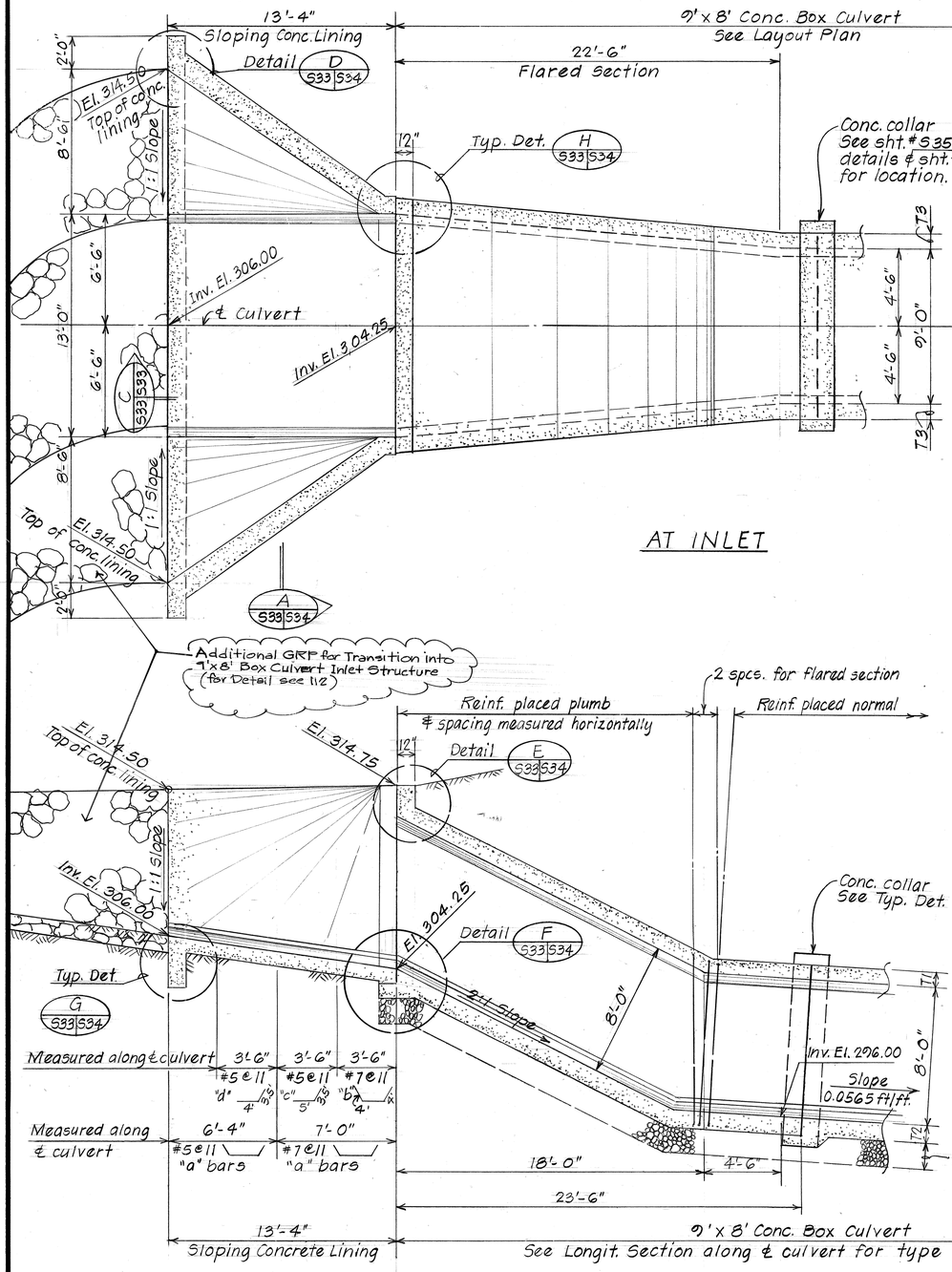

AT INLET

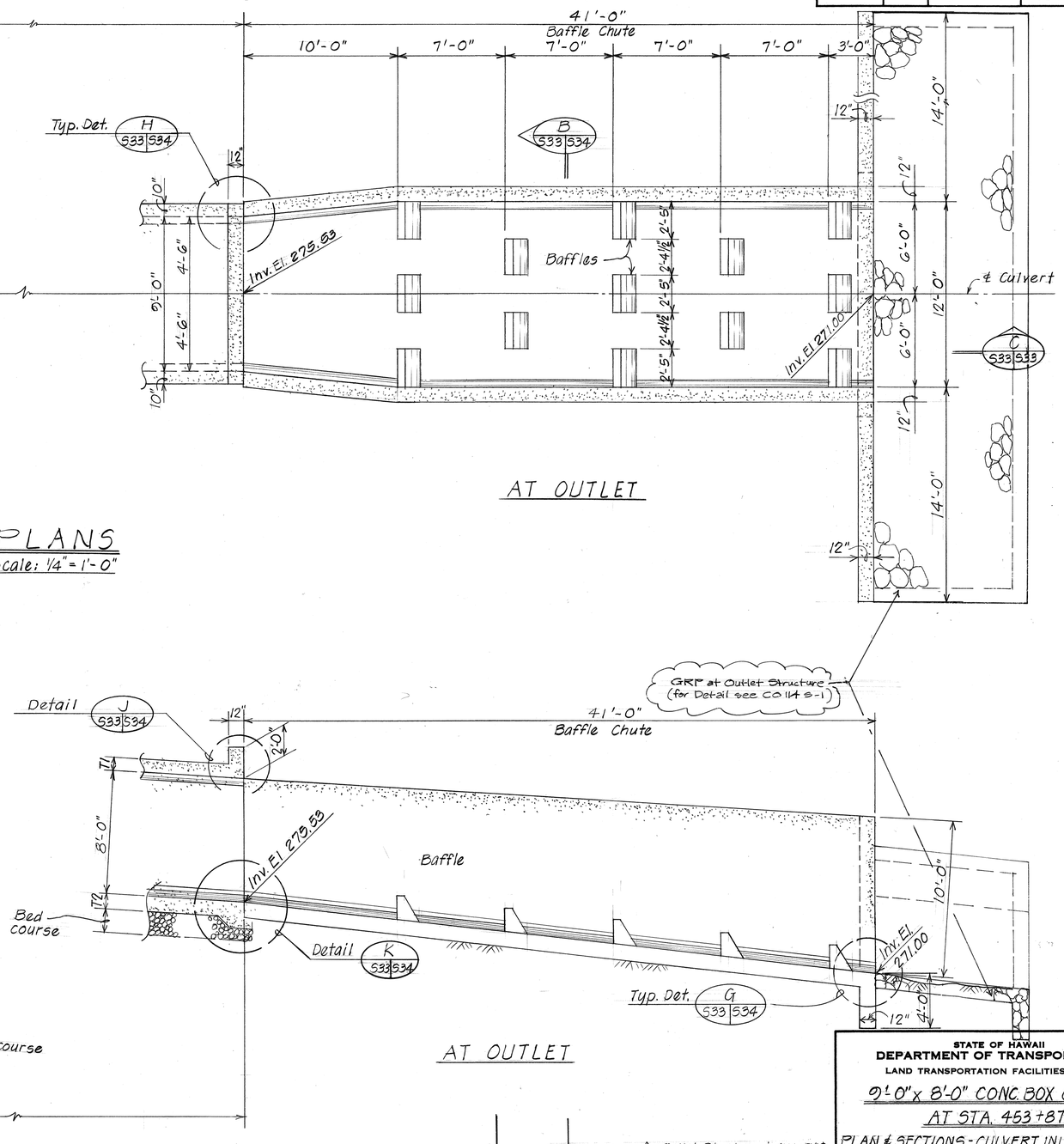

AT OUTLET

PLANS

Scale: 1/4" = 1'-0"

SECTIONS

C S33 S33

Scale: 1/4" = 1'-0"

Date	Revision
	GRP Lining for Outlet Structure at 454+70± Lt & Additional GRP for Transition into 9'x8' Box Culvert Inlet Struct. at Sta. 452+50± Rt. (see #4)

STATE OF HAWAII
DEPARTMENT OF TRANSPORTATION
LAND TRANSPORTATION FACILITIES DIVISION

9'-0" x 8'-0" CONC. BOX CULVERT
AT STA. 453+87

PLAN & SECTIONS - CULVERT INLET & OUTLET

F.A.I. Proj. No. I-H3-1(50)
KANEOHE I.C. TO HALEKOU I.C.

Scale: As Noted — Date: August 1987

SHEET No. S33 OF 35 SHEETS

ORIGINAL PLAN		DATE
	SURVEY PLOTTED BY	
	DRAWN BY J.Y.A.	7/83
	TRACED BY " "	7/83
NOTE BOOK	DESIGNED BY S.A.	7/83
	QUANTITIES BY T.K.	7/83
No.	CHECKED BY D.E.G.	7/83

"AS BUILT"

FED. ROAD DIST. NO.	STATE	FED. AID PROJ. NO.	FISCAL YEAR	SHEET NO.	TOTAL SHEETS
HAWAII	HAW.	I-H3-1(50)	1989	C.O.11451	164

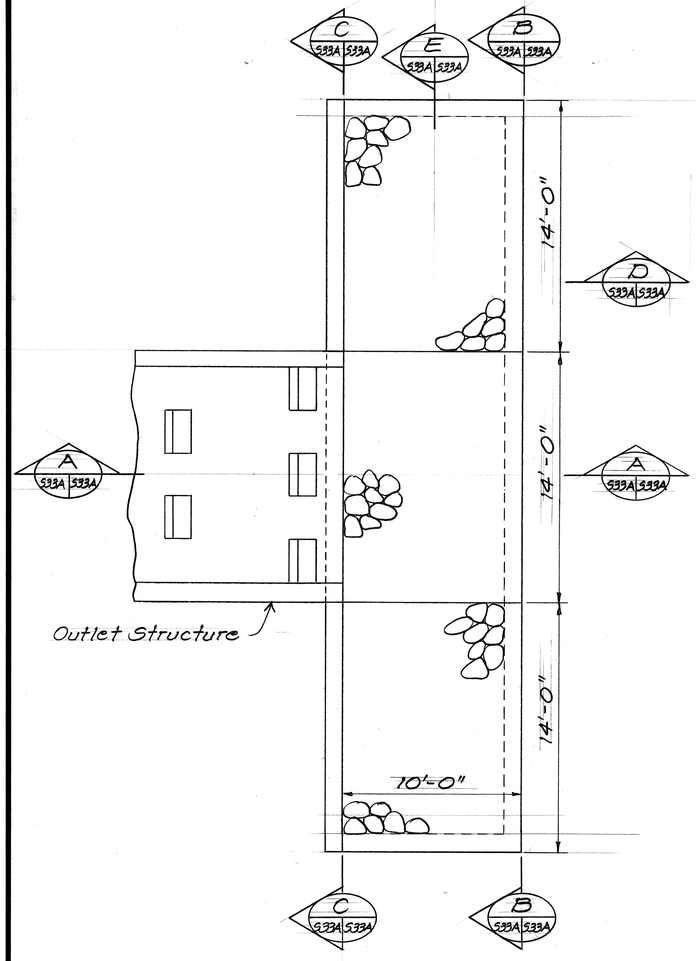

PLAN

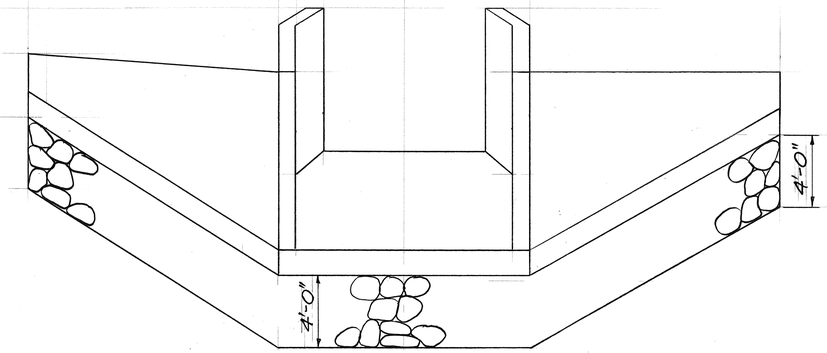

SECTION B 533A 533A

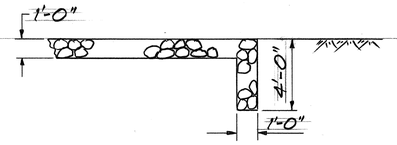

SECTION D 533A 533A

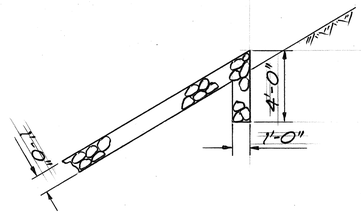

SECTION E 533A 533A

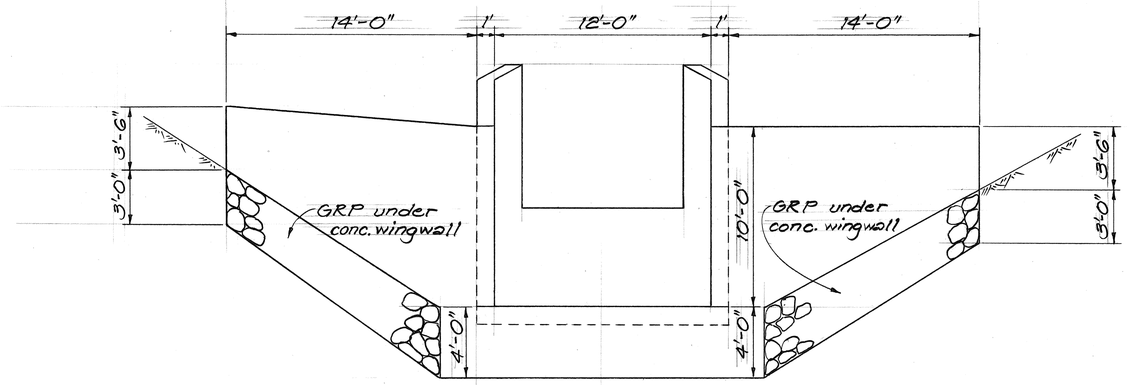

SECTION C 533A 533A

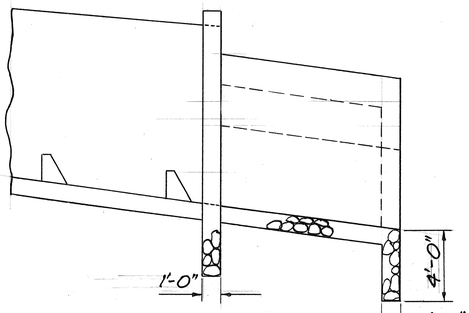

SECTION A 533A 533A

GRP DETAILS AT OUTLET STRUCTURE

DATE	REVISION
5-30-90	GRP Lining for Outlet Structure at ℄ Sta. 453 + 87 Lt.

STATE OF HAWAII
DEPARTMENT OF TRANSPORTATION
HIGHWAYS DIVISION

9'-0" x 8'-0" CONC. BOX CULVERT
AT STA. 453 + 87
PLAN & SECTS. - CULVERT INLET & OUTLET
F.A.I. Proj. No. I-H3-1(50)
KANEOHE I.C. TO HALEKOU I.C.
Scale: As Noted Date: Aug. 1987

SHEET No. 533A OF 35 SHEETS

C.O.114 S-1

ORIGINAL PLAN	SURVEY PLOTTED BY	DATE
	DRAWN BY	
	TRACED BY	
NOTE BOOK	TYPED BY	
	DESIGNED BY	
No.	QUANTITIES BY	
	CHECKED BY	

FED. ROAD DIST. NO.	STATE	FED. AID PROJ. NO.	FISCAL YEAR	SHEET NO.	TOTAL SHEETS
HAWAII	HAW.	I-H3-1(50)	1989	115	164

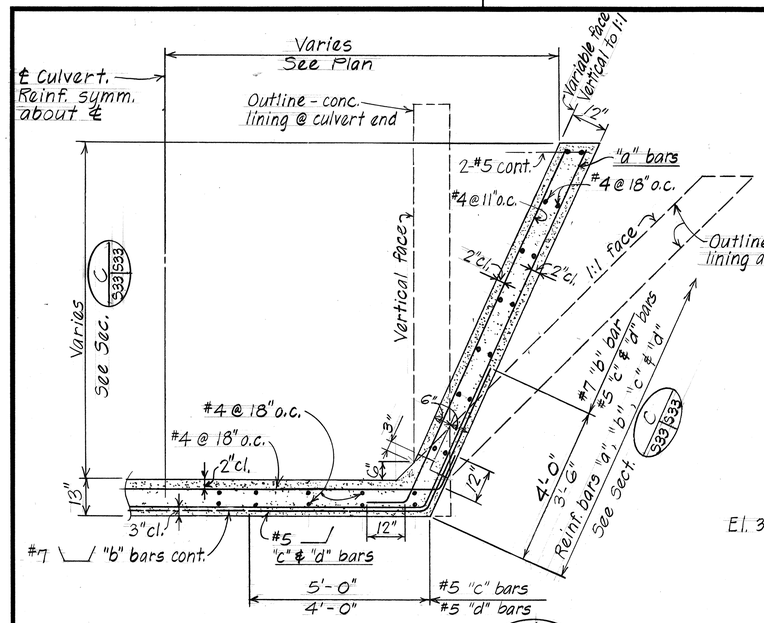

TYPICAL INTAKE SECTION (A S33|S34)
SLOPING CONCRETE LINING
Scale: 1/2" = 1'-0"

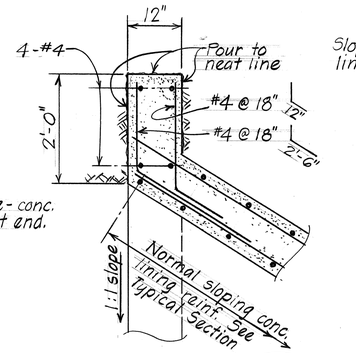

DETAIL (D S33|S34)
Scale: 3/4" = 1'-0"

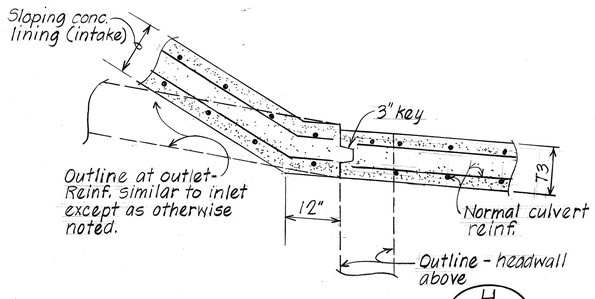

TYPICAL DETAIL (H S33|S34)
Scale: 3/4" = 1'-0"

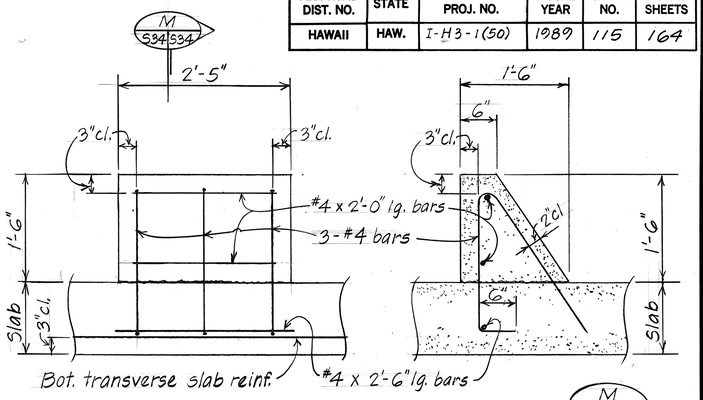

ELEVATION
SECTION (M S34|S34)

TYPICAL BAFFLE DETAIL
Scale: 1" = 1'-0"

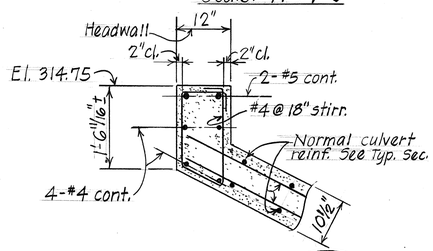

DETAIL (E S33|S34)
Scale: 3/4" = 1'-0"

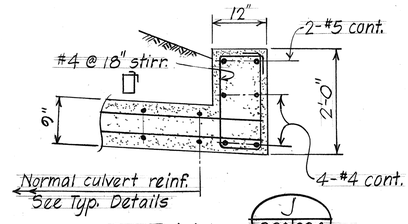

DETAIL (J S33|S34)
Scale: 3/4" = 1'-0"

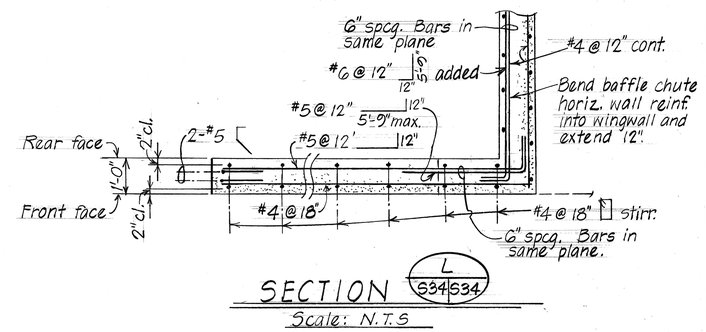

SECTION (L S34|S34)
Scale: N.T.S

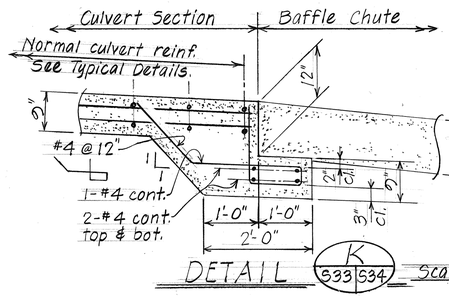

DETAIL (K S33|S34) Scale: 3/4" = 1'-0"

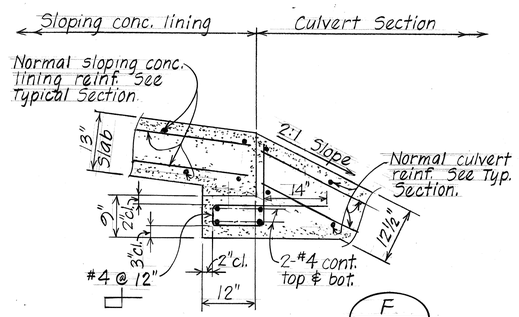

DETAIL (F S33|S34)

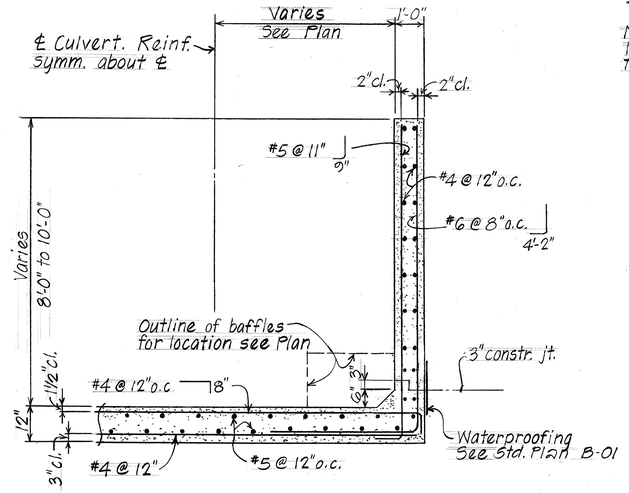

TYPICAL OUTLET SECTION (B S33|S34)
BAFFLE CHUTE
Scale: 1/2" = 1'-0"

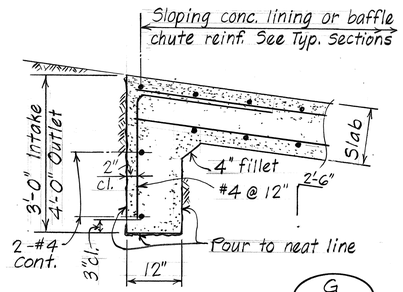

TYPICAL DETAIL (G S33|S34)
Scale: 3/4" = 1'-0"

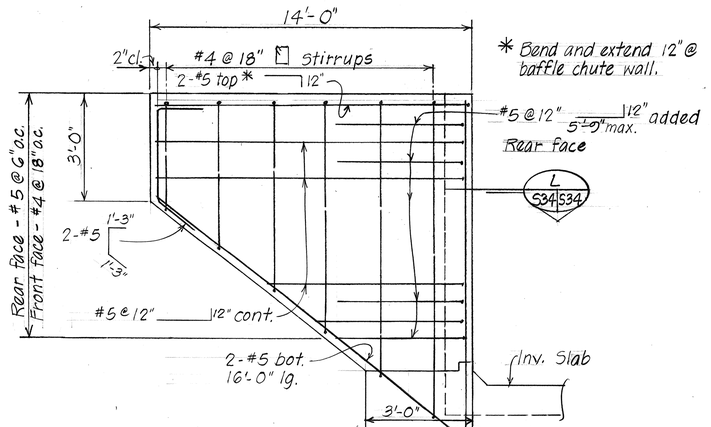

TYPICAL WINGWALL DETAIL
FOR BAFFLE CHUTE
Scale: N.T.S.

ORIGINAL PLAN			
	SURVEY PLOTTED BY	N.A.	7/83
	DRAWN BY	" "	7/83
	TRACED BY	" "	7/83
NOTE BOOK	DESIGNED BY	S.T.A.	7/83
	QUANTITIES BY	T.M.	7/83
No.	CHECKED BY	D.L.D.	7/83

STATE OF HAWAII
DEPARTMENT OF TRANSPORTATION
LAND TRANSPORTATION FACILITIES DIVISION

9'-0" x 8'-0" CONC. BOX CULVERT
AT STA. 453+87
MISC. CULVERT DETAILS

F.A.I. Proj. No. I-H3-1(50)
KANEOHE I.C. TO HALEKOU I.C.

Scale: As Noted — Date: August 1987

SHEET No. S34 OF 35 SHEETS

FED. ROAD DIST. NO.	STATE	FED. AID PROJ. NO.	FISCAL YEAR	SHEET NO.	TOTAL SHEETS
HAWAII	HAW.	I-H3-1(50)	1987	116	164

SPAN & HEIGHT			FLARED SECTION	9'-0" x 8'-0"						
TYPE			A	B	C	D	E	F		
MAX. FILL OVER TOP OF SLAB										
CONC.	TOP SLAB	T1	10½"	9"	10"	11"	12½"	14"		
CONC.	BOTTOM SLAB	T2	12½"	9"	12"	13½"	15"	17"		
CONC.	SIDE WALLS	T3	11"	10"	11½"	12½"	13½"	15"		
REINFORCING STEEL *	DIMENSION	D1	7'-0"	6'-1"	6'-3"	6'-3"	6'-4"	6'-4"		
REINFORCING STEEL *	DIMENSION	D2	2'-9"	2'-6"	2'-6"	3'-0"	3'-3"	3'-4"		
REINFORCING STEEL *	DIMENSION	D3	⅓ span	2'-9"	2'-9"	2'-9"	2'-9"	2'-9"		
BAR SIZE AND SPACING	T1	"a" bar	#7@16"o.c.	#4@17"o.c.	#7@15"o.c.	#5@15"o.c.	#5@15"o.c.	#6@14"o.c.		
BAR SIZE AND SPACING	T1	"b" bar	#6@16"o.c.	#7@17"	#6@15"	#8@15"	#8@15"	#7@14"		
BAR SIZE AND SPACING	T1	"c" bar	#9@16"	#7@17"	#8@15"	#7@15"	#8@15"	#9@14"		
BAR SIZE AND SPACING	T1	cont. "d" bar	#4@12"	#4@9"	#5@18"	#5@18"	#5@18"	#5@18"		
BAR SIZE AND SPACING	T2	"a" bar	#4@16"	#5@17"	#5@15"	#4@15"	#4@15"	#5@14"		
BAR SIZE AND SPACING	T2	"b" bar	#7@16"	#6@17"	#7@15"	#7@15"	#8@15"	#8@14"		
BAR SIZE AND SPACING	T2	"c" bar	#9@16"	#8@17"	#9@15"	#9@15"	#9@15	#9@14"		
BAR SIZE AND SPACING	T2	cont. "d" bar	#6@12"	#6@12"	#6@12"	#6@12"	#6@12"	#6@12"		
BAR SIZE AND SPACING	T3	vert. "e" bar	#4@12"	#4@12"	#4@12"	#4@12"	#4@12"	#4@12"		
QUAN.	CONCRETE: C.Y. PER LIN. FT.		Varies	1.09	1.31	1.46	1.62	1.84		
QUAN.	REINFORCING STEEL: LBS. PER LIN. FT.									

* Note: Where bars are flared on a horizontal curve, the reinforcing steel spacing given in this table shall be at the widest separation of the flared bars.

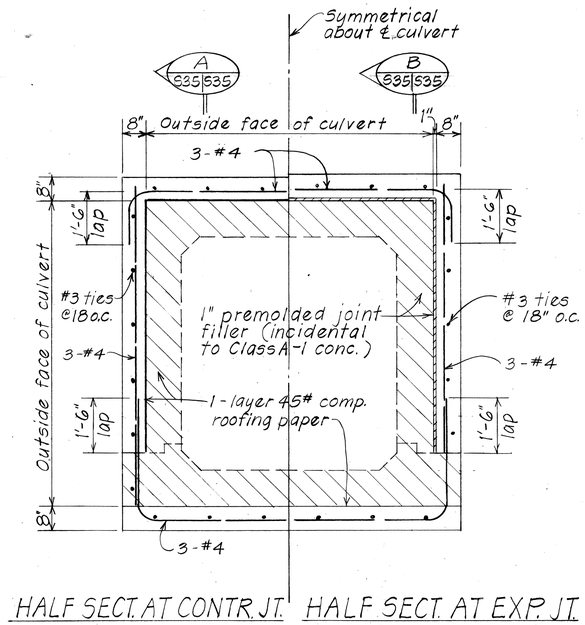

HALF SECT. AT CONTR. JT. HALF SECT. AT EXP. JT.

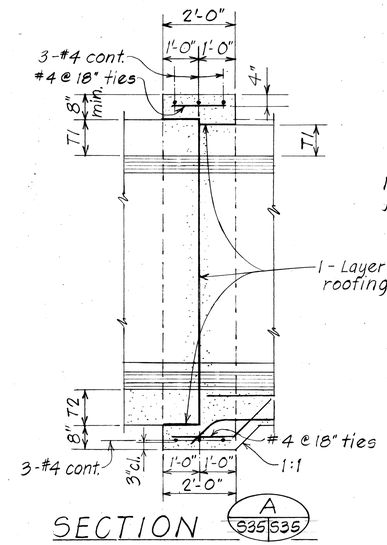

SECTION

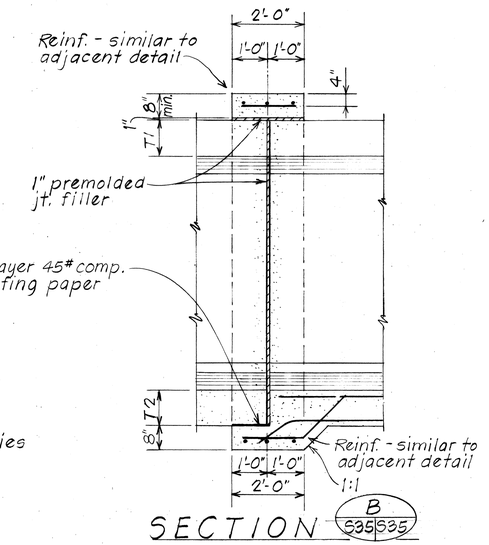

SECTION

TYPICAL CONCRETE COLLAR DETAIL

Scale: ½" = 1'-0"

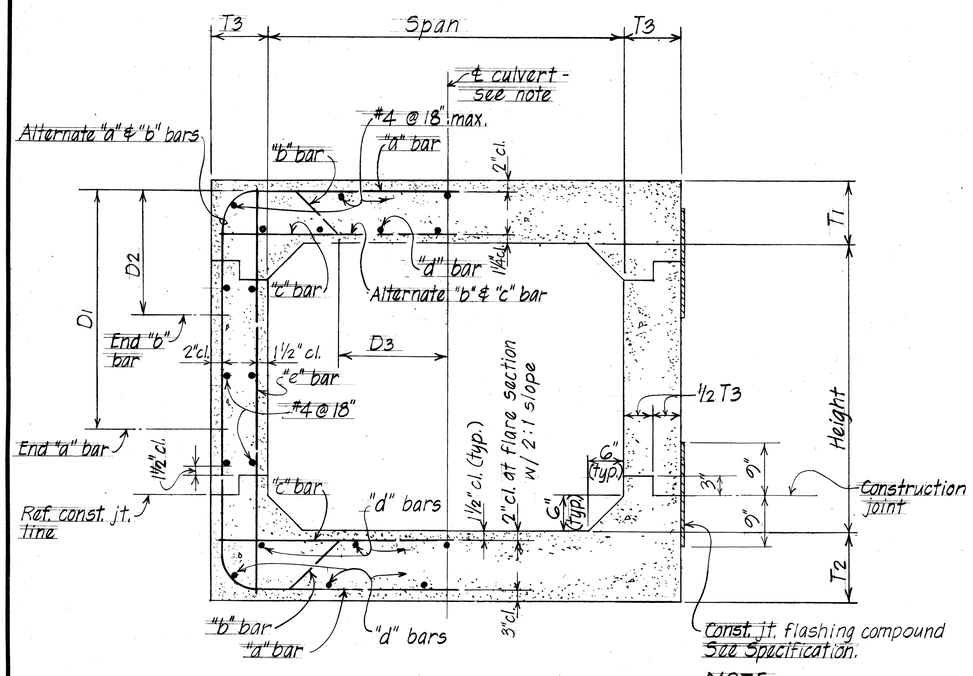

TYPICAL SECTION THRU CONCRETE BOX CULVERT

Scale: 1" = 1'-0"

NOTE:

Culvert details are symmetrical about the vertical and horizontal axis at center of culvert except where shown otherwise.

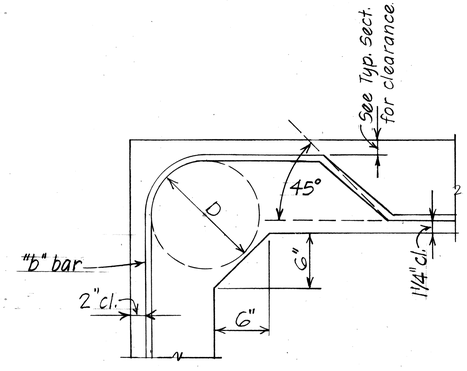

TYPICAL BEND OF MAIN BAR

Scale: 1½" = 1'-0"

SCHEDULE	
BAR SIZE	D
#4	3"
#5	3¾"
#6	4½"
#7	5¼"
#8	6"
#9	9"

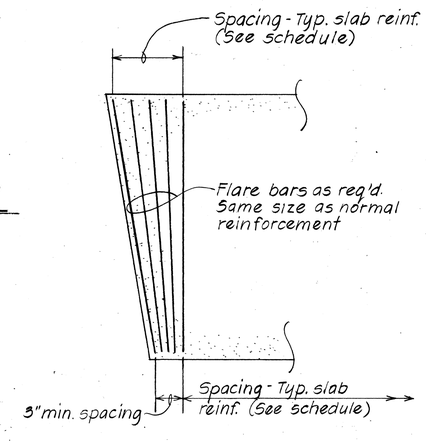

TYP. ARRANGEMENT - MAIN FLARED BARS AT CULVERT WALLS

STATE OF HAWAII
DEPARTMENT OF TRANSPORTATION
LAND TRANSPORTATION FACILITIES DIVISION

9'-0" x 8'-0" CONC. BOX CULVERT
AT STA. 453+87
TYPICAL DETAILS

F.A.I. Proj. No. I-H3-1(50)
KANEOHE I.C. TO HALEKOU I.C.

Scale: As Noted Date: August 1987

SHEET No. S35 OF 35 SHEETS

ORIGINAL PLAN		DATE
	SURVEY PLOTTED BY	
	TRACED BY	
NOTE BOOK	DESIGNED BY	
	QUANTITIES BY	
No.	CHECKED BY	