| FED. ROAD DIST. NO. | STATE | FED. AID PROJ. NO. | FISCAL YEAR | SHEET NO. | TOTAL SHEETS |
|---|---|---|---|---|---|
| HAWAII | HAW. | I-H3-1 (52) | 1988 | 35 | 75 |

## SYMBOLS AND ABBREVIATIONS

| | |
|---|---|
| ABUT. | ABUTMENT |
| @ | AT |
| & | AND |
| ℄ | BASELINE |
| BAL. | BALANCE |
| BET. | BETWEEN |
| BOT. | BOTTOM |
| BRG. | BEARING |
| ℄ | CENTERLINE |
| CONC. | CONCRETE |
| CONN. | CONNECTION |
| CONST. | CONSTRUCTION |
| CONT. | CONTINUOUS |
| C.F., CU.FT. | CUBIC FOOT |
| C.Y., CU.YD. | CUBIC YARD |
| DIA. | DIAMETER |
| DIAG. | DIAGONAL |
| DET. | DETAIL |
| EA. | EACH |
| E.F. | EACH FACE |
| E.W. | EACH WAY |
| EL., ELEV. | ELEVATION |
| EQ. | EQUAL |
| EXIST. | EXISTING |
| EXP. | EXPANSION |
| FIN. | FINISH |
| FTG. | FOOTING |
| F.A. | FORCE ACCOUNT |
| FT. | FOOT |
| GRD. | GROUND |
| G.R.P. | GROUTED RUBBLE PAVING |
| H.V.B. | HAIKU VALLEY BRIDGE |
| HORIZ. | HORIZONTAL |
| I.B. | INBOUND |
| IN. | INCH |
| JT. | JOINT |
| LIN. FT. | LINEAR FEET |
| L.S. | LUMP SUM |
| LB. | POUND |
| LG. | LONG |
| MAX. | MAXIMUM |
| MISC. | MISCELLANEOUS |
| N.I.C. | NOT IN CONTRACT |
| NO., # | NUMBER |
| O.B. | OUTBOUND |
| O.C. | ON CENTER |
| ⅊ | PLATE |
| PCF | POUNDS PER CUBIC FEET |
| PSI | POUNDS PER SQUARE INCH |
| PT. | POINT |
| R= | RADIUS |
| REINF. | REINFORCEMENT |
| REQ'D. | REQUIRED |
| SECT. | SECTION |
| SIM. | SIMILAR |
| SP. | SPACE |
| STA. | STATION |
| STIRR. | STIRRUP |
| SQ. | SQUARE |
| SYMM. | SYMMETRICAL |
| TYP. | TYPICAL |
| T.K.T. | TRANS KOOLAU TUNNEL |
| VERT. | VERTICAL |
| W/ | WITH |
| WWF | WELDED WIRE FABRIC |

| ORIGINAL PLAN | SURVEY PLOTTED BY | DATE |
|---|---|---|
| | DRAWN BY | |
| NOTEBOOK | TRACED BY | |
| | DESIGNED BY | |
| | QUANTITIES BY | |
| No. | CHECKED BY | |

## STRUCTURAL GENERAL NOTES

1. GENERAL SPECIFICATIONS: STATE OF HAWAII, DEPARTMENT OF TRANSPORTATION STANDARD SPECIFICATIONS FOR ROAD AND BRIDGE CONSTRUCTION, 1985 AND SPECIAL PROVISIONS PREPARED FOR THIS CONTRACT.
2. DESIGN SPECIFICATIONS: AASHTO STANDARD SPECIFICATIONS FOR HIGHWAY BRIDGES, THIRTEENTH EDITION, 1983 AND INTERIM SPECIFICATIONS OF 1984 THRU 1987.
3. DESIGN LOADS:
   A. DEAD LOAD: AN ALLOWANCE OF 20 PSF FOR FUTURE WEARING SURFACE OF ASPHALT CONCRETE HAS BEEN INCLUDED IN DEAD LOAD CALCULATIONS. CONCRETE UNIT WEIGHT OF 160 PCF HAS BEEN ASSUMED FOR DEAD LOAD CALCULATIONS.
   B. LIVE LOAD: HS20-44 AND INTERSTATE LOADING OR CONSTRUCTION VEHICLE WITH AXLE LOADING AS INDICATED. AXLE WIDTH ASSUMED TO BE 6'-0".

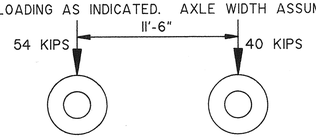


4. DESIGN STRESSES:
   ALLOWABLE CONCRETE STRESSES USED IN DESIGN SHALL CONFORM TO AASHTO STANDARD SPECIFICATIONS FOR HIGHWAY BRIDGES 13TH EDITION, 1983 AND INTERIM SPECIFICATIONS OF 1984 THRU 1986.

| CONCRETE | CLASS A | CLASS BD | CLASS E |
|---|---|---|---|
| f'c | 3,000 PSI | 3,700 PSI | 4,500 PSI |
| fc | 1,200 PSI | 1,200 PSI | 1,800 PSI |

   REINFORCING STEEL DESIGN STRESS: GRADE 40, fs = 20,000 PSI UNLESS OTHERWISE NOTED. WHERE USED, GRADE 60, fs = 24,000 PSI.
5. MATERIALS:
   A. ALL CONCRETE SHALL BE CLASS A UNLESS OTHERWISE NOTED.
   B. CONCRETE FOR BRIDGE DECK SHALL BE CLASS BD.
   C. CONCRETE FOR BRIDGE PIERS AND FOOTINGS SHALL BE CLASS E.
   D. ALL REINFORCING STEEL SHALL CONFORM TO THE REQUIREMENTS OF ASTM A615 AND SHALL BE DEFORMED.
   E. ALL STUCTURAL STEEL SHALL BE ASTM A36, HOT DIPPED GALVANIZED UNLESS OTHERWISE NOTED.
   F. ALL ANCHOR BOLTS, WASHERS AND NUTS SHALL CONFORM TO THE REQUIREMENTS OF ASTM A307 HOT DIPPED GALVANIZED, UNLESS OTHERWISE NOTED.
   G. ELASTOMERIC BEARING PADS SHALL BE OF 60 ± 5 HARDNESS OR AS NOTED.
   H. FOR PRESTRESSED CONCRETE MEMBERS SEE PLANS.
6. REINFORCEMENT:
   A. THE MINIMUM CLEAR COVER FOR REINFORCING STEEL SHALL BE AS FOLLOWS UNLESS OTHERWISE SPECIFIED ON THE PLANS.
      1) DECK SLABS
         TOP BARS - 1-1/2"
         BOTTOM BARS - 1-1/4"
      2) ABUTMENTS, AND RETAINING WALLS - 2"
      3) BRIDGE PIERS - 2" TO TIES
      4) CONCRETE CAST AGAINST AND PERMANENTLY EXPOSED TO EARTH - 3"
   B. REINFORCING BARS SHALL BE DETAILED IN ACCORDANCE WITH "DETAILS AND DETAILING OF CONCRETE REINFORCEMENT" (ACI 315) UNLESS OTHERWISE NOTED.
   C. ALL DIMENSIONS RELATING TO REINFORCING BARS (I.E. SPACING OF BARS, ETC.) ARE TO CENTERS OF BARS UNLESS OTHERWISE NOTED.
7. CONSTRUCTION METHODS:
   A. SEE STANDARD SPECIFICATIONS FOR ROAD AND BRIDGE CONSTRUCTION AND SPECIAL PROVISIONS.
   B. THE TOP OF CONCRETE DECK SLAB SHALL BE CONSTRUCTED TO ATTAIN THE ROADWAY VERTICAL AND HORIZONTAL CURVES INDICATED ON THE PLANS.
   C. EXCEPT AS OTHERWISE NOTED ALL VERTICAL DIMENSIONS ARE MEASURED PLUMB.
   D. GIRDER CONCRETE SEATS RECEIVING ELASTOMERIC PADS SHALL BE POURED MONOLITHICALLY WITH THE SUPPORTING STRUCTURE. TOP OF CONCRETE SEATS SHALL BE FINISHED TO A SMOOTH LEVEL SURFACE TO THE ELEVATION SHOWN ON THE PLANS. ALL POINTS ON THE SURFACE SHALL BE LEVEL TO WITHIN 1/16".
   E. THE BOTTOMS OF THE ELASTOMERIC BEARING PADS SHALL BE FASTENED TO THE CONCRETE SEATS WITH ADHESIVES APPROVED BY THE ENGINEER.
   F. ABUTMENTS SHALL BE BACKFILLED TO AN ELEVATION NO HIGHER THAN THE ELEVATION OF THE BOTTOM OF GIRDER UNTIL AFTER THE GIRDERS ARE IN PLACE.
   G. UNLESS OTHERWISE NOTED, ALL EXPOSED CONCRETE EDGES SHALL BE CHAMFERED 3/4" X 3/4".
8. GENERAL:
   A. THE CONTRACTOR SHALL VERIFY THE LOCATION OF EXISTING UTILITY LINES AND NOTIFY THE RESPECTIVE OWNERS BEFORE COMMENCING THE WORK OF EXCAVATING OR THE DRIVING OF PILES.
   B. THE CONTRACTOR SHALL VERIFY THE LOCATION OF THE UNDERGROUND RADIAL SYSTEM AND SHALL TAKE ADEQUATE PRECAUTIONS TO AVOID DAMAGE TO THE SYSTEM. ANY DAMAGE CAUSED BY THE CONTRACTOR'S OPERATIONS SHALL BE REPAIRED AT HIS OWN EXPENSE UNDER THE DIRECTION OF THE ENGINEER.
   C. CONSTRUCTION JOINTS SHALL BE LOCATED AS SHOWN ON THE PLANS UNLESS OTHERWISE APPROVED BY THE ENGINEER.
   D. THE CONTRACTOR SHALL CONDUCT THE WORK AT ALL TIMES IN SUCH A MANNER THAT SHALL PERMIT THE VEHICULAR USE OF THE HAIKU ACCESS ROAD BY THE ENGINEER AND OTHER AUTHORIZED PARTIES. WITHIN THE PROJECT LIMITS OF WORK IS THE EXISTING TEMPORARY HAIKU ACCESS ROAD. THE PURPOSE OF THE TEMPORARY HAIKU ACCESS ROAD IS TO ALLOW THE CONTRACTOR OF THE TRANS KOOLAU EXPLORATORY TUNNEL AND OTHER AUTHORIZED PARTIES, ACCESS FROM THE TUNNEL PORTAL TO THE HAIKU ACCESS ROAD. IT SHALL BE THE RESPONSIBILITY OF THE CONTRACTOR TO PERFORM WORK IN SUCH A MANNER SO AS NOT TO INTERFERE WITH OPERATIONS USING THE TEMPORARY ACCESS ROAD. AT SUCH A TIME WHEN THE CONTRACTOR HAS COMPLETED WORK ON THE SERVICE ROAD TO PROVIDE AN ALTERNATE ROUTE CONNECTING THE TUNNEL PORTAL AND HAIKU ACCESS ROAD, THE ENGINEER SHALL ALLOW THE CONTRACTOR TO CLOSE THE TEMPORARY ACCESS ROAD AND TO PERFORM WORK WHICH WOULD HAVE AFFECTED THE USE OF THE TEMPORARY ACCESS ROAD.
9. FOUNDATION NOTES
   A. A STRUCTURE FOUNDATION REPORT ENTITLED "SUBSURFACE INVESTIGATION REPORT, PHASE I, H-3 WINDWARD VIADUCT, HAIKU VALLEY, OAHU, HAWAII, MAY 1988", HAS BEEN PREPARED FOR THIS PROJECT. A COPY OF THIS REPORT IS AVAILABLE FOR REVIEW AT THE DEPARTMENT OF TRANSPORTATION.
   B. TEST PILES SHALL BE DRIVEN AT THE INBOUND ABUTMENT, OUTBOUND ABUTMENT, AND PIER FOOTINGS AS INDICATED IN THE PLANS. LOAD TESTS SHALL BE PERFORMED WHERE INDICATED IN THE PLANS, SUBJECT TO RELOCATION BY THE ENGINEER.
   C. PILES SHALL BE INSTALLED FULL LENGTH WITHOUT ANY SPLICES.
   D. THE CONTRACTOR SHALL INSTALL EACH GROUP OF PILES BY STARTING FROM THE CENTER OF EACH GROUP, PROCEEDING OUTWARD.
   E. CONCRETE IN ALL PIER FOOTINGS SHALL BE CLASS E.
   F. BATTERED PRESTRESSED CONCRETE PILES SHALL BE EQUIPPED WITH DRIVING SHOES AT THE OUTBOUND ABUTMENT.
   G. PILE CAPACITIES ARE AS FOLLOWS:

| | |
|---|---|
| PIER 3 INBOUND - 100 TONS | PIER 6 INBOUND - 75 TONS |
| PIER 4 INBOUND - 100 TONS | INBOUND ABUTMENT - 75 TONS |
| PIER 5 INBOUND - 75 TONS | OUTBOUND ABUTMENT - 100 TONS |

   H. SPREAD FOOTINGS SHALL BE EXCAVATED AND POURED TO NEAT LINES AS CALLED FOR ON THE PLANS. IN THE EVENT OF OVER-EXCAVATION FOR SPREAD FOOTINGS, THE SPACE BETWEEN THE FOOTING AND GROUND SHALL BE FILLED WITH A MINIMUM OF CLASS D CONCRETE AT THE CONTRACTOR'S EXPENSE AND AS DIRECTED BY THE ENGINEER. OVER-EXCAVATED PILE FOOTINGS MAY BE BACKFILLED TO THE PROPER ELEVATION WITH BACKFILL MATERIAL APPROVED BY THE ENGINEER.
10. MISCELLANEOUS NOTES
   A. TEMPLATES SHALL BE USED FOR SETTING ANCHOR BOLTS AT FARADAY SHIELD AND SIGN SUPPORT POLE CONNECTION LOCATIONS TO ENSURE PROPER SPACING OF BOLTS.
   B. ALL EXPOSED PORTIONS OF ANCHOR BOLTS EMBEDDED IN CONCRETE, (FARADAY SHIELD SUPPORTS, LIGHT POLE SUPPORTS, ETC.), SHALL BE WRAPPED WITH BURLAP THEN COATED WITH ASPHALT AS DIRECTED BY THE ENGINEER.

## INDEX TO BRIDGE DRAWINGS



## ESTIMATED QUANTITIES

| ITEM NO. | ITEM DESCRIPTION | UNIT | INBOUND QUANTITY | OUTBOUND QUANTITY |
|---|---|---|---|---|
| 206.6000 | STRUCTURE EXCAVATION FOR BRIDGES | CU. YD. | 4,210 | 1,600 |
| 206.7300 | STRUCTURE BACKFILL FOR BRIDGES | CU. YD. | 2,810 | 610 |
| 206.8500 | FILTER MATERIAL FOR STRUCTURES | CU. YD. | 27 | 40 |
| 503.1092 | CONCRETE IN HAIKU VALLEY BRIDGES (EXCEPT FTGS.) | L.S. | (2,870 C.Y.) | (580 C.Y.) |
| 503.1093 | CONCRETE IN FOOTINGS FOR HAIKU VALLEY BRIDGES | L.S. | (1,110 L.F.) | (185 C.Y.) |
| 504.6500 | KEEHI TYPE IV PRESTRESSED CONCRETE GIRDERS | L.S. | (4,140 C.Y.) | (786 L.F.) |
| 504.6510 | STRAND SLIPPAGE MEASUREMENT ON GIRDERS | EACH | 42 | 8 |
| 505.0001 | PILE DRIVING EQUIPMENT EXPENSE (NOT TO EXCEED $8,000) | L.S. | -- | -- |
| 505.0010 | PILE LOAD TESTS | EACH | 3 | 1 |
| 505.0430 | PRESTRESSED CONCRETE PILES, FURNISHED | LIN. FT. | 10,657 | 279 |
| 505.4300 | PRESTRESSED CONCRETE PILES, DRIVEN | LIN. FT. | 9,986 | 212 |
| 505.6000 | PREDRILLED HOLES FOR PRESTRESSED CONCRETE PILES | LIN. FT. | 1,000 | 200 |
| 505.9000 | EXTENSIONS OR "BUILD-UPS" OF PILES | F.A. | -- | -- |
| 507.5100 | BRIDGE CONCRETE RAILING | LIN. FT. | 1,029 | 205 |
| 602.0090 | REINFORCING STEEL IN HAIKU VALLEY BRIDGES | L.S. | (1,101,000) | (186,000 LBS.) |
| 612.0200 | GROUTED RUBBLE SLOPE PROTECTION | CU. YD. | 225 | 112 |

| DATE | REVISION |
|---|---|
| 2/15/90 | ADDED NOTE 10B. |
| 5/25/89 | ADDED NOTE 10A. |
| 1/10/89 | QUANTITIES REVISED, PAY ITEM ADDED |

MYRON G. OKUBO REGISTERED PROFESSIONAL ENGINEER No. 4320-S HAWAII, U.S.A.

THIS WORK WAS PREPARED BY ME OR UNDER MY SUPERVISION

Myron Okubo

STATE OF HAWAII
DEPARTMENT OF TRANSPORTATION
HIGHWAYS DIVISION

STRUCTURAL GENERAL NOTES

INTERSTATE ROUTE H-3
F.A.I. PROJECT NO. I-H3-1 (52)

SCALE: NONE DATE: JULY 1988

SHEET No. S-1 OF S-26 SHEETS

AS BUILT

C.O. ADD. 35 R

| FED. ROAD DIST. NO. | STATE | FED. AID PROJ. NO. | FISCAL YEAR | SHEET NO. | TOTAL SHEETS |
|---|---|---|---|---|---|
| HAWAII | HAW. | I-H3-1(52) | 1988 | 36 | 75 |

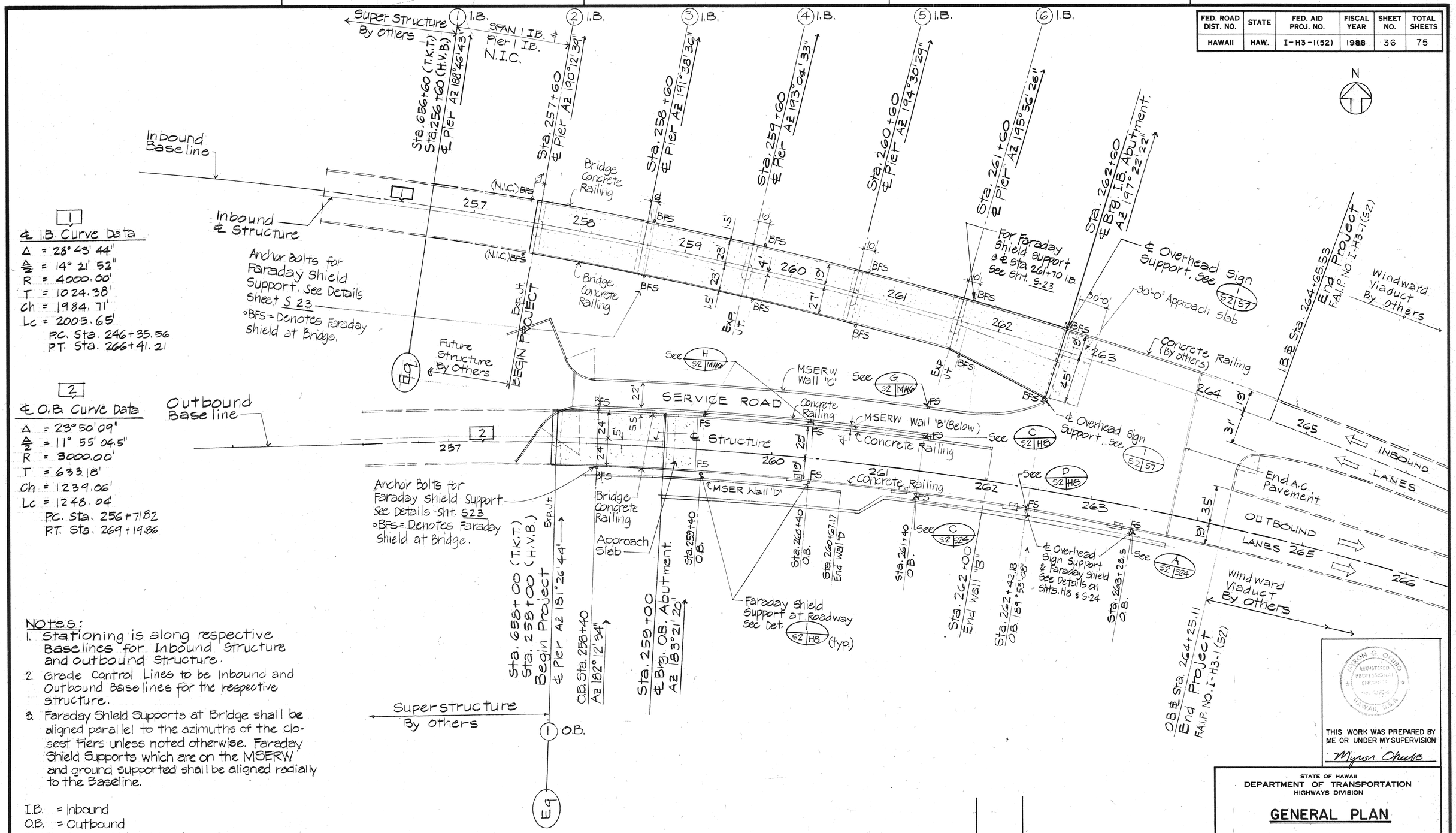


Notes:

1. Stationing is along respective Baselines for Inbound Structure and outbound Structure.
2. Grade Control Lines to be Inbound and Outbound Baselines for the respective structure.
3. Faraday Shield Supports at Bridge shall be aligned parallel to the azimuths of the closest Piers unless noted otherwise. Faraday Shield Supports which are on the MSERW and ground supported shall be aligned radially to the Baseline.

I.B. = Inbound
O.B. = Outbound
T.K.T. = Trans-Koolau Tunnel
H.V.B. = Haiku Valley Bridges

| DATE | REVISION |
|---|---|
| 1/10/89 | Note 3 Added, Faraday Shield Support Foundations Clarified, Project Limits Revised |

AS BUILT

THIS WORK WAS PREPARED BY ME OR UNDER MY SUPERVISION
Myron Okuda

STATE OF HAWAII
DEPARTMENT OF TRANSPORTATION
HIGHWAYS DIVISION

# GENERAL PLAN

INTERSTATE ROUTE H-3
F.A.I. PROJECT NO. I-H3-1(52)

SCALE: AS NOTED
DATE: JULY 1988

SHEET No. S2 OF S26 SHEETS

ADD 36

ORIGINAL PLAN
SURVEY PLOTTED BY
DRAWN BY
TRACED BY
DESIGNED BY
QUANTITIES BY
CHECKED BY
NOTE BOOK
No.
DATE

| FED. ROAD DIST. NO. | STATE | FED. AID PROJ. NO. | FISCAL YEAR | SHEET NO. | TOTAL SHEETS |
|---|---|---|---|---|---|
| HAWAII | HAW. | I-H3-1(52) | 1988 | 37 | 75 |

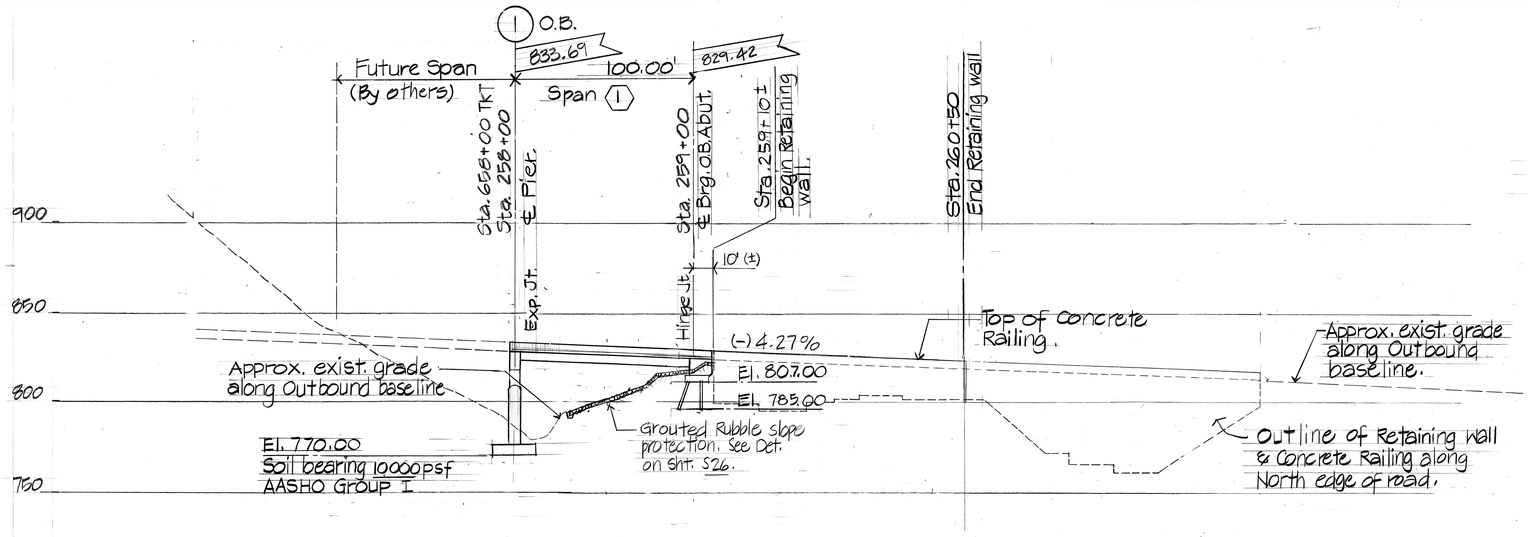


Note:
Dimensions measured along Baseline.

## ELEVATION - OUTBOUND
Scale: 1" = 40'

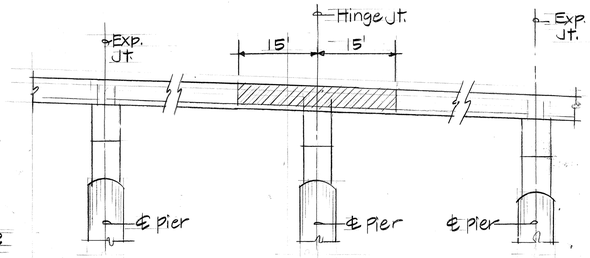


At Hinge Joint Piers where spans are continuous, Hatch portion of Deck Slab and pier Diaphragm shall be poured a minimum of 14 days after the adjacent portions of the Deck Slab.

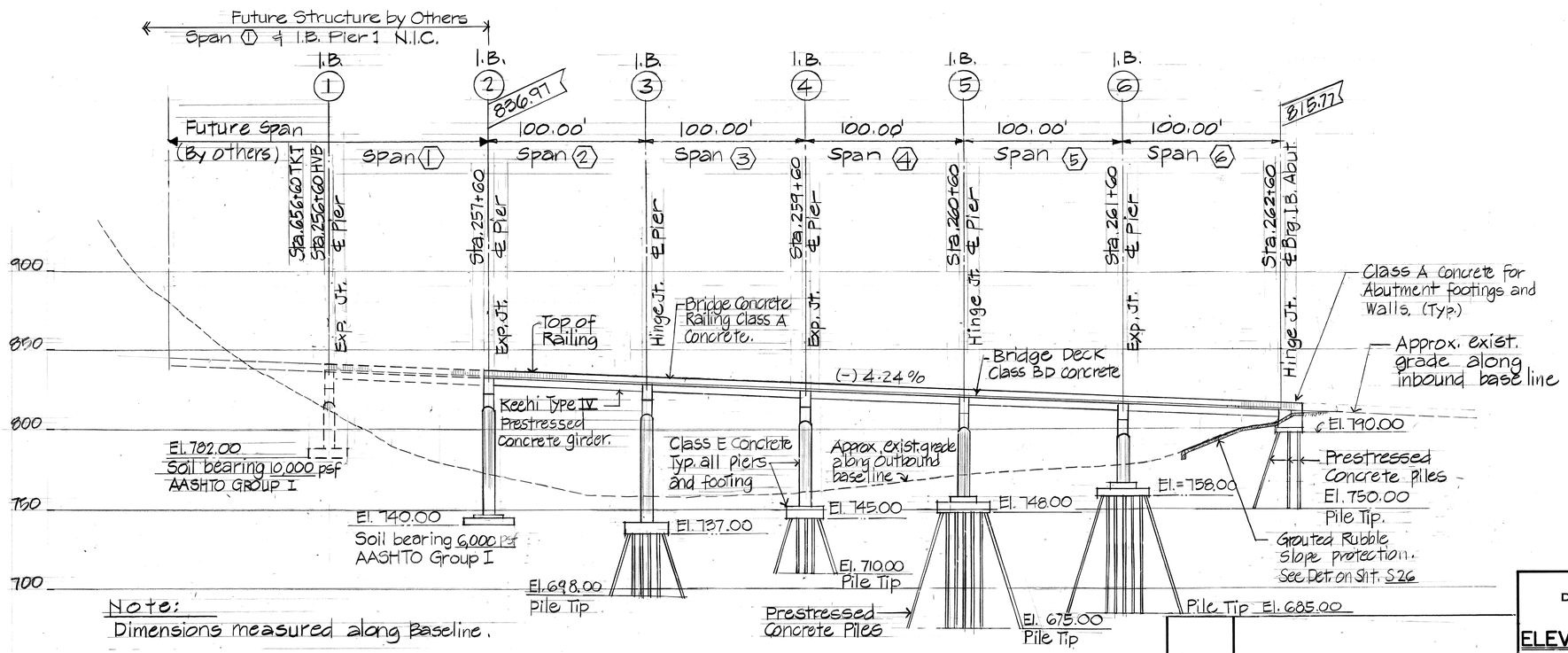


Note:
Dimensions measured along Baseline.

## ELEVATION - INBOUND
Scale: 1" = 40'

| DATE | REVISION |
|---|---|
| 9/11/89 | Revised Grades & Pilecap Elevation |
| 1/10/89 | Project Limits Revised |

AS BUILT

MYRON G. OKUBO
REGISTERED PROFESSIONAL ENGINEER
No. 4320-S
HAWAII, U.S.A.

THIS WORK WAS PREPARED BY ME OR UNDER MY SUPERVISION

Myron Okubo

STATE OF HAWAII
DEPARTMENT OF TRANSPORTATION
HIGHWAYS DIVISION

## ELEVATION - INBOUND & OUTBOUND

INTERSTATE ROUTE H-3
F.A.I. PROJECT NO. I-H3-1(52)

SCALE: 1" = 40' DATE: JULY 1988

SHEET No. S3 OF S26 SHEETS

ORIGINAL PLAN | SURVEY PLOTTED BY | DRAWN BY | TRACED BY | DESIGNED BY | QUANTITIES BY | CHECKED BY | DATE | NOTE BOOK | No.

C.O. ADD. 37

S3

| FED. ROAD DIST. NO. | STATE | FED. AID PROJ. NO. | FISCAL YEAR | SHEET NO. | TOTAL SHEETS |
|---|---|---|---|---|---|
| HAWAII | HAW. | I-H3-1(52) | 1988 | 38 | 75 |

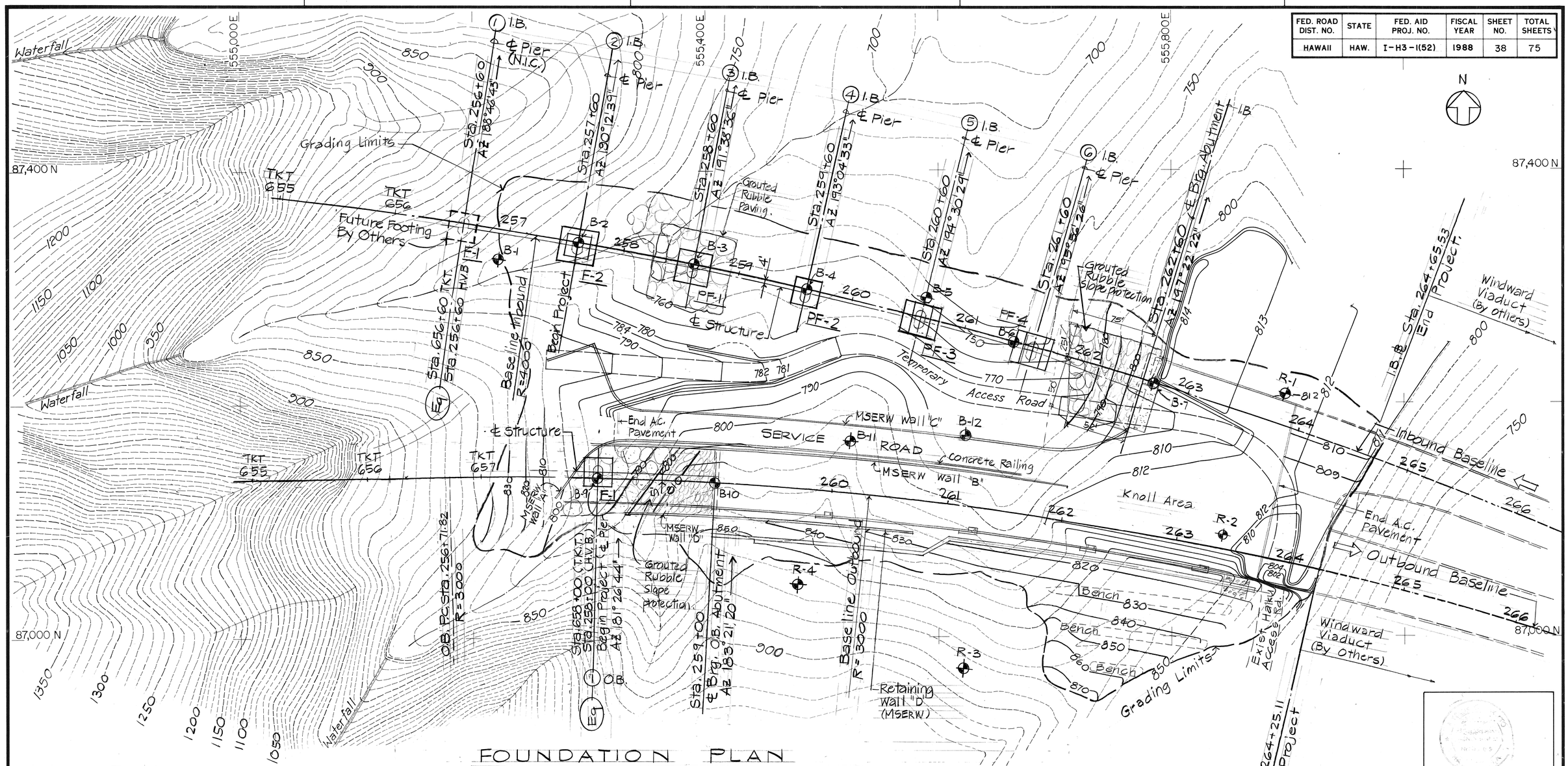


# FOUNDATION PLAN

Scale: 1" = 40'

## LEGEND

| SYMBOL EXISTING | SYMBOL NEW | DESCRIPTION |
|---|---|---|
| ---800--- | —800— | Contour |
| ✦ B-11 | | Boring Location. |
| | F-1 | Pier / Footing |

## Notes:

1. Existing Topographic Features, including ground contours are from field surveys of the Project Site provided by the State of Hawaii, Dated 27 September 1983.
2. The contractor shall verify that the field conditions are as shown and that the intent of this project can be met.
3. The contractor shall coordinate his work with Engineer so that the U.S. Coast Guard OMEGA Station is not adversely affected by relocation of the underground radials.
4. For Boring Logs see sheets B1-B6.
5. See Sht. S-25 for Pile Details.

| DATE | REVISION |
|---|---|
| 1/10/89 | Added Note No. 5 Project & Grading Limits Revised |

THIS WORK WAS PREPARED BY ME OR UNDER MY SUPERVISION

STATE OF HAWAII
DEPARTMENT OF TRANSPORTATION
HIGHWAYS DIVISION

FOUNDATION PLAN

INTERSTATE ROUTE H-3
F.A.I. PROJECT NO. I-H3-1(52)

SCALE: AS NOTED DATE: JULY 1988

SHEET No. S4 OF S26 SHEETS

ORIGINAL PLAN | SURVEY PLOTTED BY | DRAWN BY | TRACED BY | DESIGNED BY | QUANTITIES BY | CHECKED BY | DATE | NOTE BOOK | No.

AS BUILT

ADD. 38

35

| FED. ROAD DIST. NO. | STATE | FED. AID PROJ. NO. | FISCAL YEAR | SHEET NO. | TOTAL SHEETS |
|---|---|---|---|---|---|
| HAWAII | HAW. | I-H3-1(52) | 1988 | 39 | 75 |

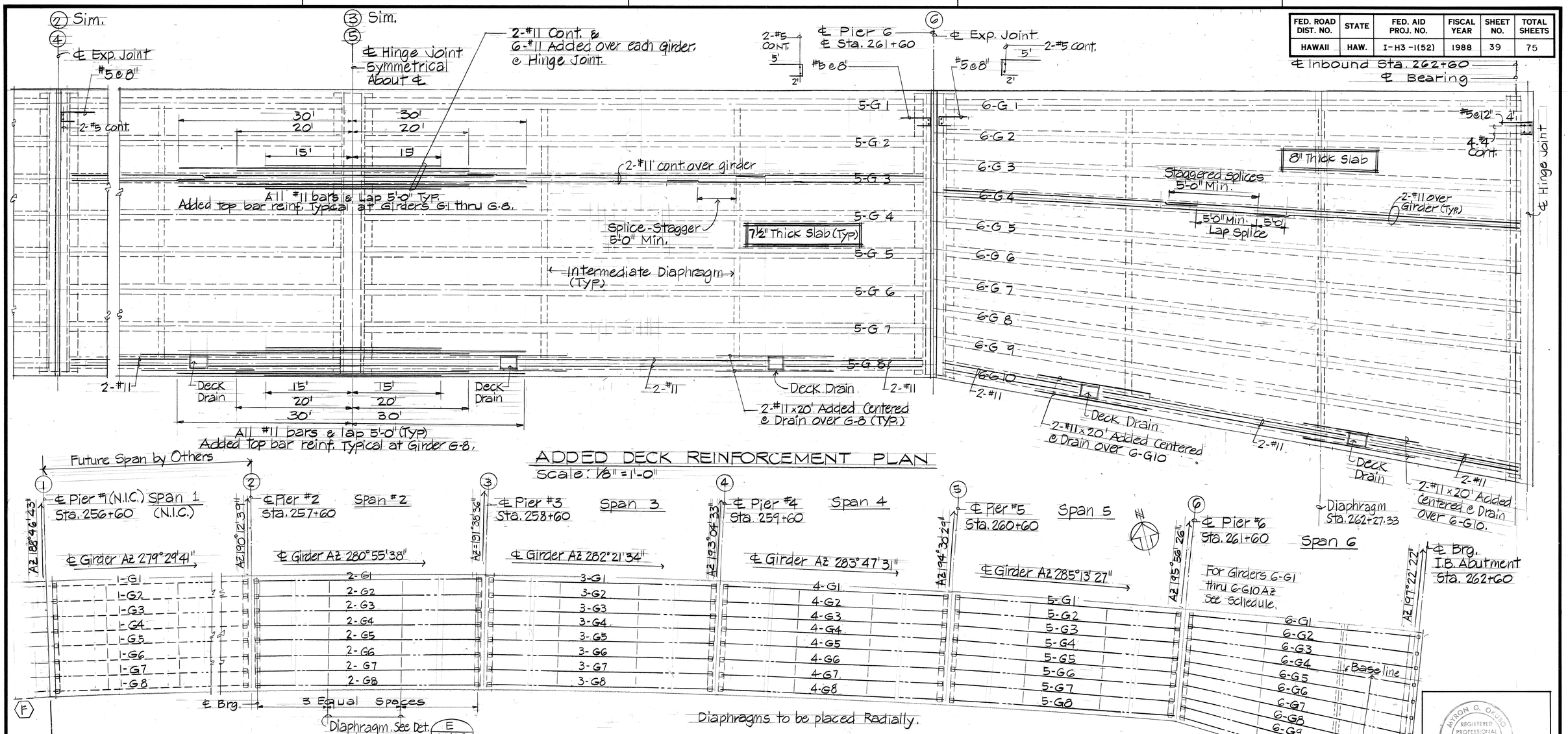


## ADDED DECK REINFORCEMENT PLAN

Scale: 1/8" = 1'-0"




## INBOUND - DECK FRAMING PLAN

Scale: 1" = 20'

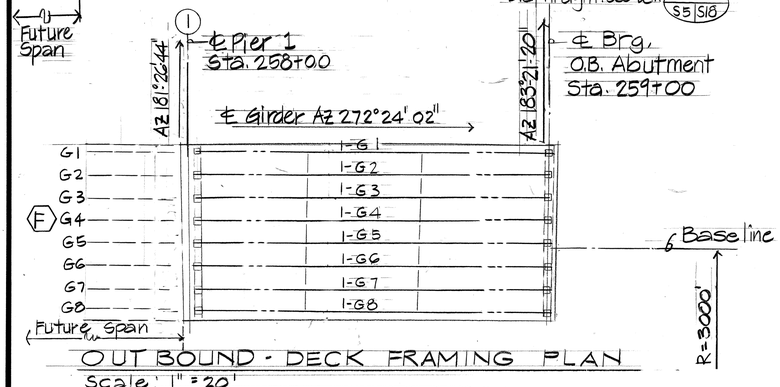


## OUT BOUND - DECK FRAMING PLAN

Scale: 1" = 20'

### Notes:

1. Intermediate Diaphragms to be placed Radially. For Typical Diaphragm Detail, see E S5 S18
2. Bridge Deck Slab thickness = 7½" typ., except for Span 6 I.B. where thickness = 8".
3. Add 2-#11 over each Girder (Typ.) For splices refer to Span 6 I.B.

GIRDER AZ SCHEDULE
INBOUND SPAN 6

| GIRDER | AZIMUTH |
|---|---|
| 6-G1 | 286°39'24" |
| 6-G2 | 287°47'56" |
| 6-G3 | 288°56'37" |
| 6-G4 | 290°05'23" |
| 6-G5 | 291°14'12" |
| 6-G6 | 292°23'00" |
| 6-G7 | 293°31'43" |
| 6-G8 | 294°40'19" |
| 6-G9 | 295°48'44" |
| 6-G10 | 296°56'55" |

| DATE | REVISION |
|---|---|
| 1/10/89 | Note 3 Revised, Inbound Span 1 Deleted |

AS BUILT

MYRON G. OKUTO REGISTERED PROFESSIONAL ENGINEER No. 4030-S HAWAII, U.S.A.

THIS WORK WAS PREPARED BY ME OR UNDER MY SUPERVISION

STATE OF HAWAII
DEPARTMENT OF TRANSPORTATION
HIGHWAYS DIVISION

DECK FRAMING & REINFORCEMENT PLANS

INTERSTATE ROUTE H-3
F.A.I. PROJECT NO. I-H3-1(52)

SCALE: AS NOTED DATE: JULY 1988

SHEET No. S5 OF S26 SHEETS

ORIGINAL PLAN | SURVEY PLOTTED BY | TRACED BY | DESIGNED BY | QUANTITIES BY | CHECKED BY | DATE | NOTE BOOK No.

ADD. 39

S5

36

| FED. ROAD DIST. NO. | STATE | FED. AID PROJ. NO. | FISCAL YEAR | SHEET NO. | TOTAL SHEETS |
|---|---|---|---|---|---|
| HAWAII | HAW. | I-H3-1(52) | 1988 | 40 | 75 |

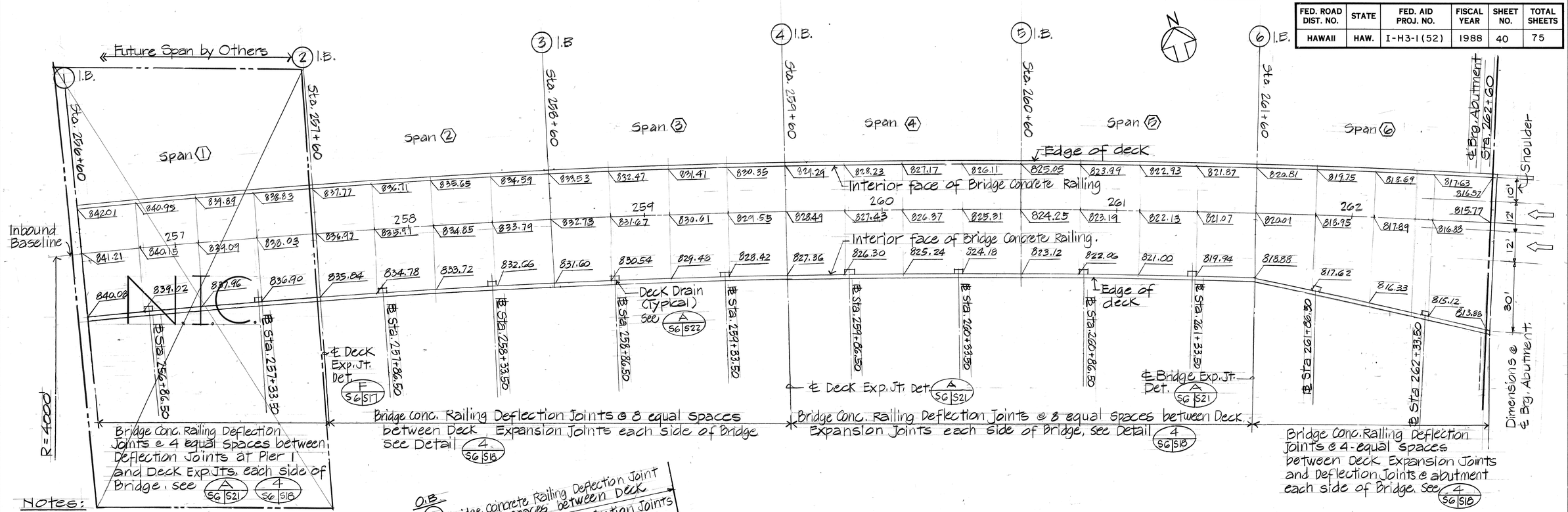


Notes:

1. Deck elevations given at 25'-0" intervals measured radially along the Baseline.
2. Deck Drains located along South side of Bridge Deck as shown.

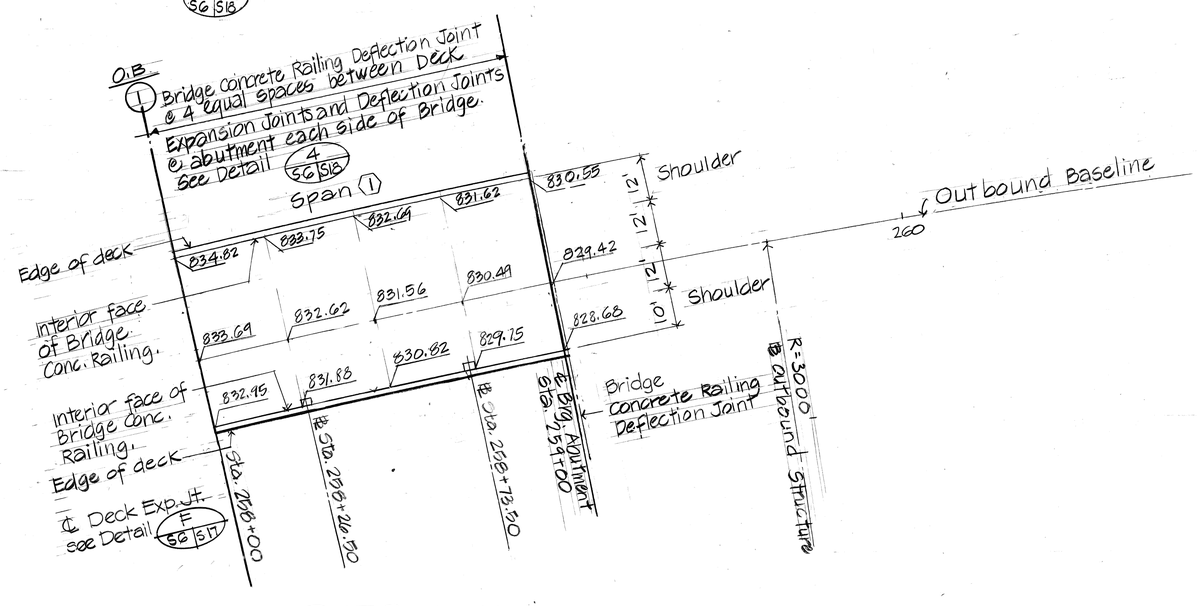


OUTBOUND

FINISHED DECK ELEVATIONS

Scale: 1" = 20'

| DATE | REVISION |
|---|---|
| 1/10/89 | Deck Expansion Joint Detail Clarified, Inbound Span 1 Deleted |

AS BUILT

MYRON G. OKUBO REGISTERED PROFESSIONAL ENGINEER No. 4320-S HAWAII, U.S.A.

THIS WORK WAS PREPARED BY ME OR UNDER MY SUPERVISION

STATE OF HAWAII
DEPARTMENT OF TRANSPORTATION
HIGHWAYS DIVISION

FINISHED DECK ELEVATIONS

INTERSTATE ROUTE H-3
F.A.I. PROJECT NO. I-H3-1(52)

SCALE: 1" = 20' DATE: JULY 1988

SHEET No. S6 OF S26 SHEETS

ORIGINAL PLAN | SURVEY PLOTTED BY | DRAWN BY | TRACED BY | DESIGNED BY | QUANTITIES BY | CHECKED BY | DATE | NOTE BOOK No.

ADD. 40

| FED. ROAD DIST. NO. | STATE | FED. AID PROJ. NO. | FISCAL YEAR | SHEET NO. | TOTAL SHEETS |
|---|---|---|---|---|---|
| HAWAII | HAW. | I-H3-1(52) | 1988 | 41 | 75 |

A.B. = Anchor Block
C.B. = Creep Block

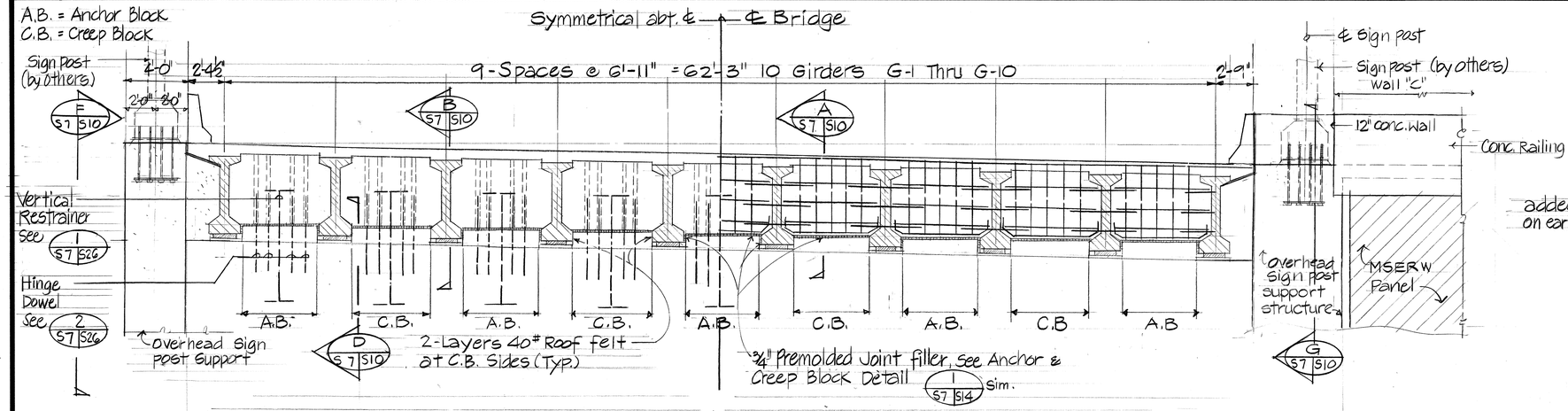


PARTIAL INBOUND ABUTMENT ELEVATION
Scale: ¼" = 1'-0"

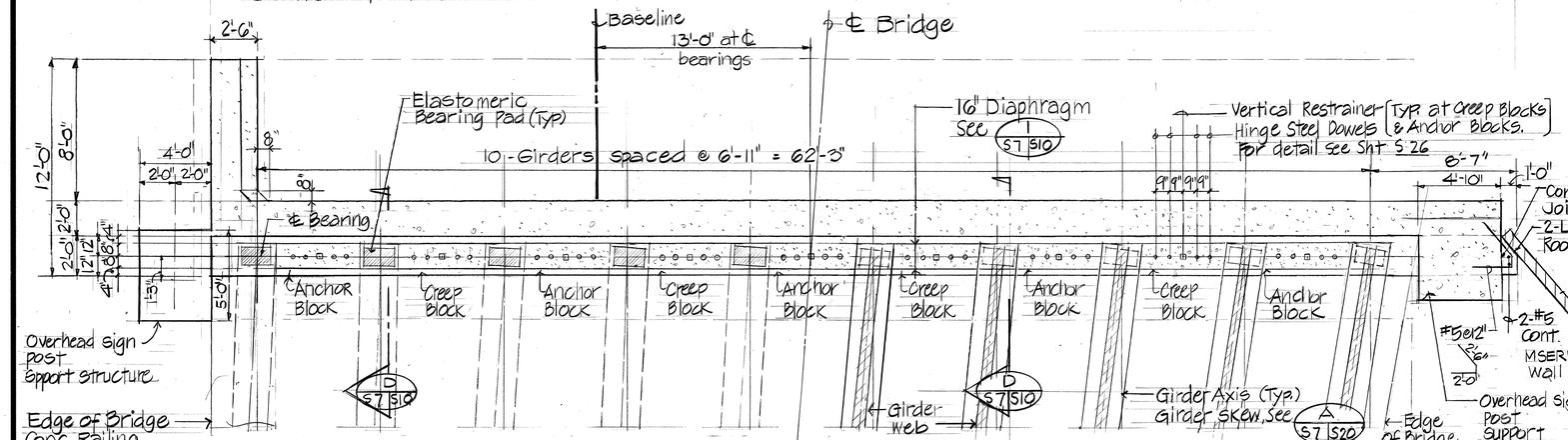


SECTION ABOVE GIRDER BEARING — SECTION THRU DIAPHRAGM

INBOUND ABUTMENT PLAN
Scale: ¼" = 1'-0"

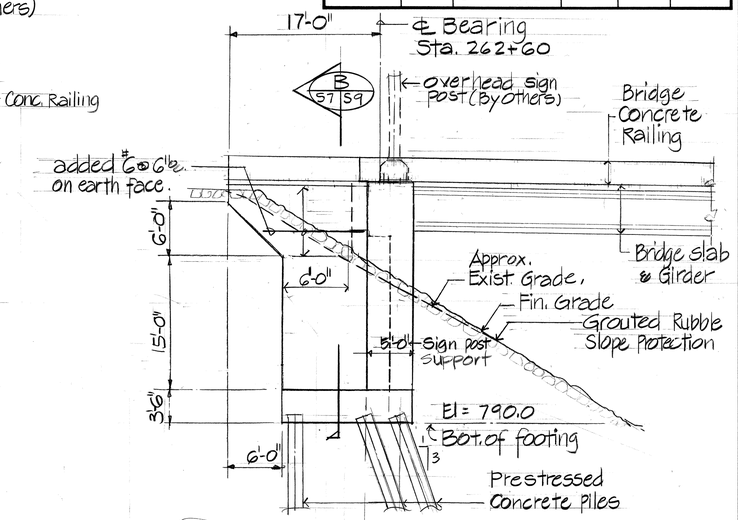


SIDE WALL ELEVATION A S7 S7
Scale: ⅛" = 1'-0"

Note: Approach slab not shown for clarity.

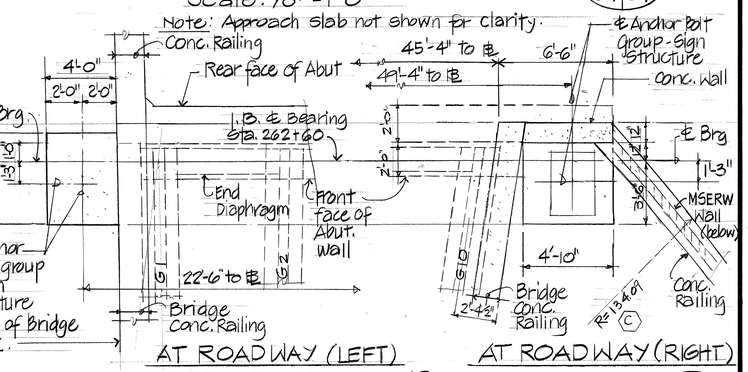


AT ROADWAY (LEFT) — AT ROADWAY (RIGHT)

SIGN STRUCTURE AT INBOUND ABUTMENT 1 S2, S7 S7
Scale: ¼" = 1'-0"

For Anchor Bolt Details See S-24

A S7 S7 — A S7 S9

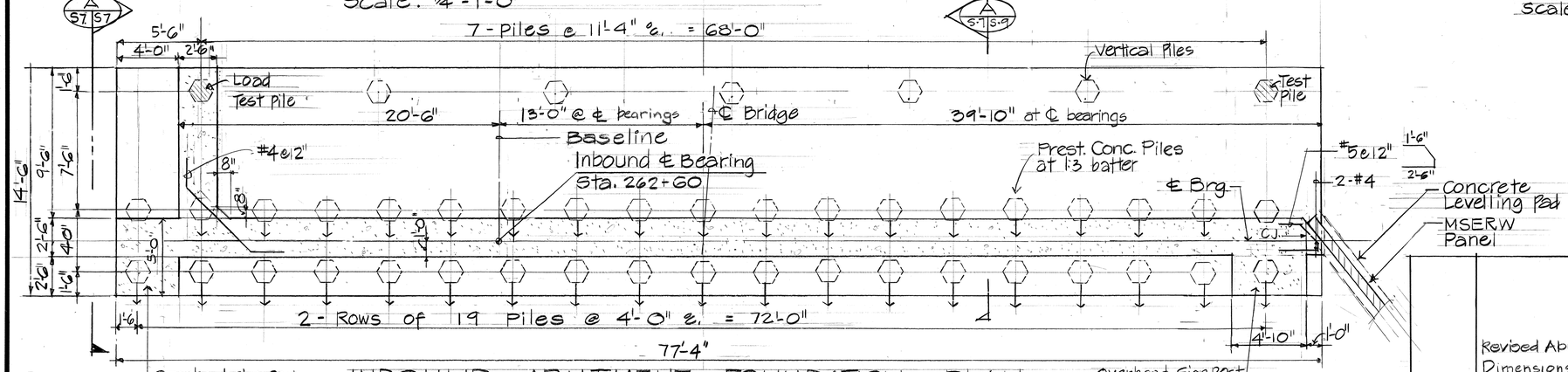


INBOUND ABUTMENT FOUNDATION PLAN
Scale: ¼" = 1'-0"

| DATE | REVISION |
|---|---|
| 1/10/89 | Revised Abutment Elevation<br>Dimensions Revised<br>Pole Location Revised |

THIS WORK WAS PREPARED BY ME OR UNDER MY SUPERVISION
Myron Okubo
MYRON G. OKUBO REGISTERED PROFESSIONAL ENGINEER No. 4720-S HAWAII, U.S.A.

STATE OF HAWAII
DEPARTMENT OF TRANSPORTATION
HIGHWAYS DIVISION

**INBOUND ABUTMENT**

INTERSTATE ROUTE H-3
F.A.I. PROJECT NO. I-H3-1(52):

SCALE: AS NOTED — DATE: JULY 1988

SHEET No. S7 OF S26 SHEETS

ORIGINAL PLAN — SURVEY PLOTTED BY — DRAWN BY — TRACED BY — DESIGNED BY — QUANTITIES BY — CHECKED BY — DATE — NOTE BOOK — No.

AS BUILT

ADD. 41

| FED. ROAD DIST. NO. | STATE | FED. AID PROJ. NO. | FISCAL YEAR | SHEET NO. | TOTAL SHEETS |
|---|---|---|---|---|---|
| HAWAII | HAW. | I-H3-1(52) | 1988 | 42 | 75 |

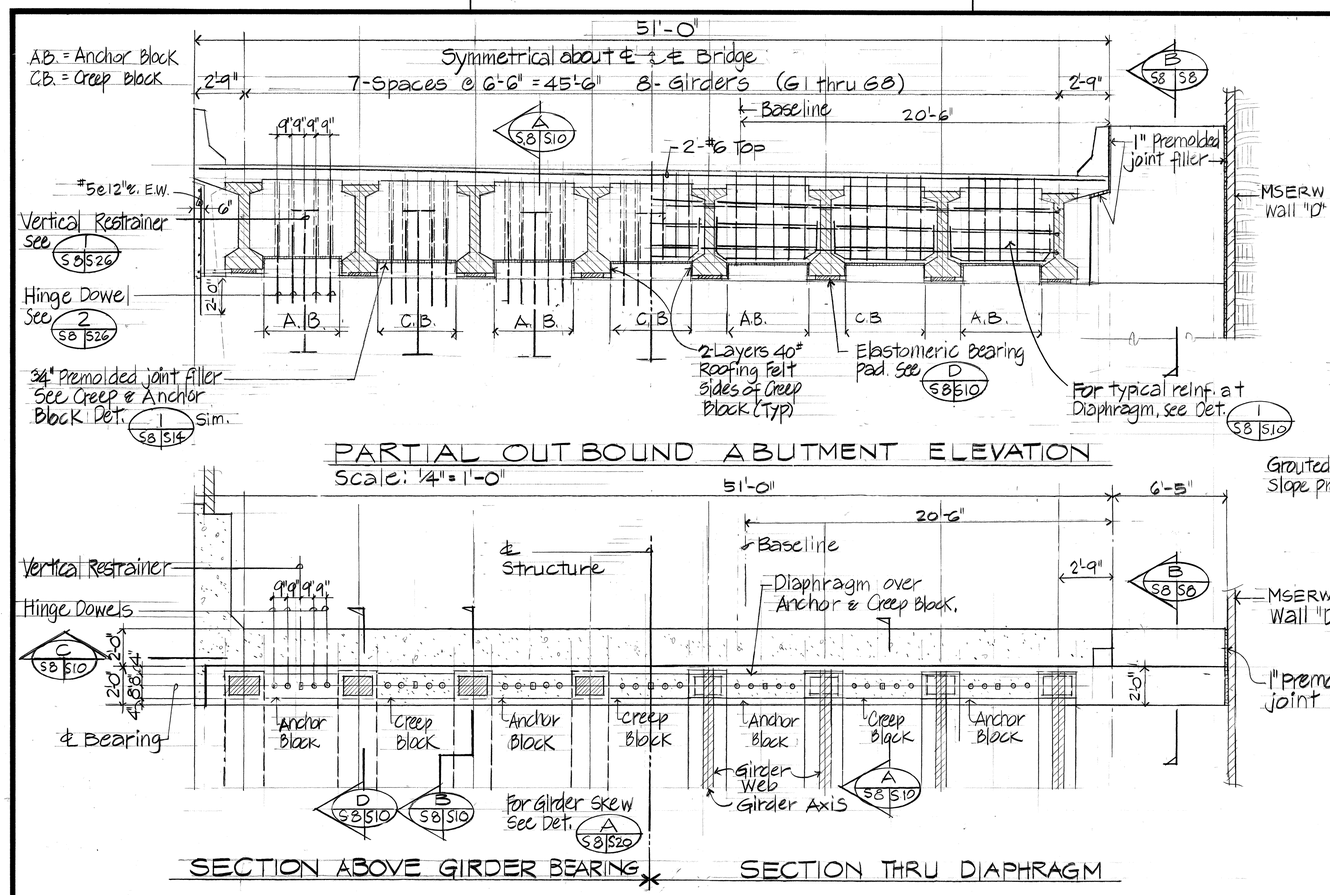


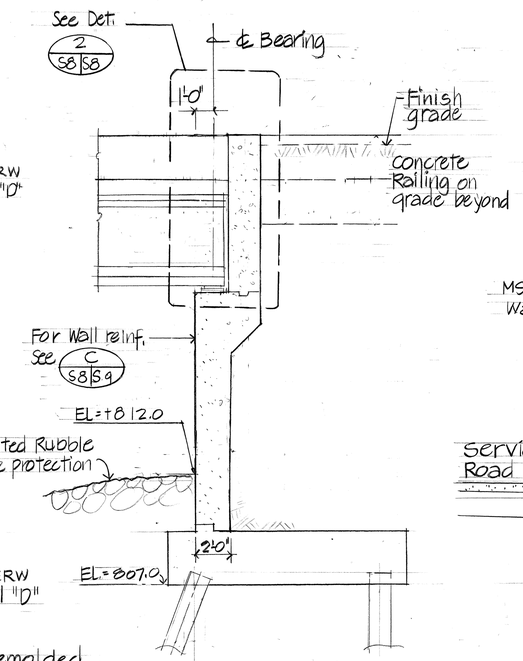


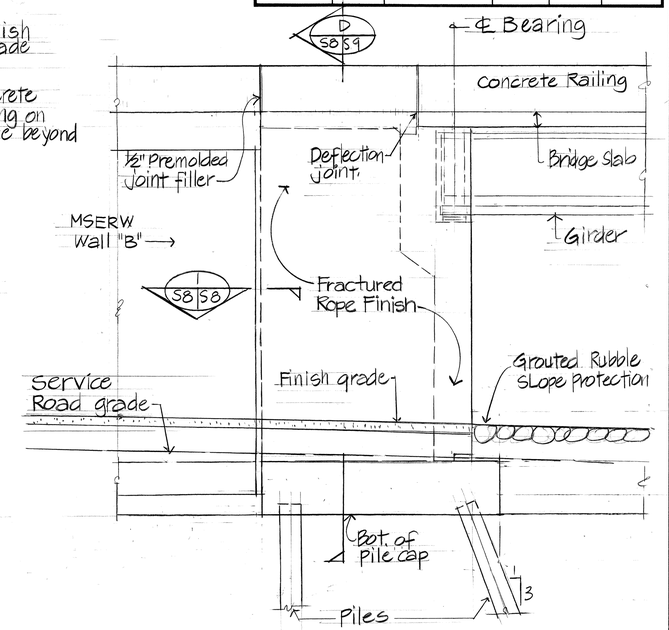


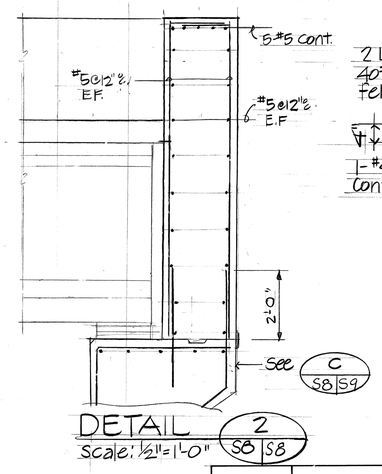


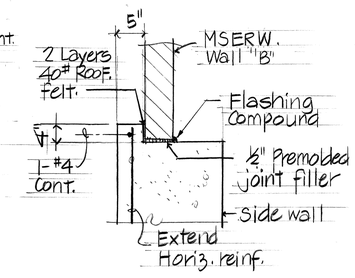


HAYRON G. OKUBO REGISTERED PROFESSIONAL ENGINEER No. 4320-S HAWAII, U.S.A.

THIS WORK WAS PREPARED BY ME OR UNDER MY SUPERVISION

| DATE | REVISION |
|---|---|
| 1/10/89 | Pile Layout Revised, Detail A Revised |

STATE OF HAWAII
DEPARTMENT OF TRANSPORTATION
HIGHWAYS DIVISION

**OUTBOUND ABUTMENT**

INTERSTATE ROUTE H-3
F.A.I. PROJECT NO. I-H3-1(52):

SCALE: AS NOTED DATE: JULY 1988

SHEET No. S8 OF S26 SHEETS

ORIGINAL PLAN | SURVEY PLOTTED BY | DRAWN BY | TRACED BY | DESIGNED BY | QUANTITIES BY | CHECKED BY | DATE | NOTE BOOK No.

AS BUILT

ADD. 42

| FED. ROAD DIST. NO. | STATE | FED. AID PROJ. NO. | FISCAL YEAR | SHEET NO. | TOTAL SHEETS |
|---|---|---|---|---|---|
| HAWAII | HAW. | I-H3-1(52) | 1988 | 43 | 75 |

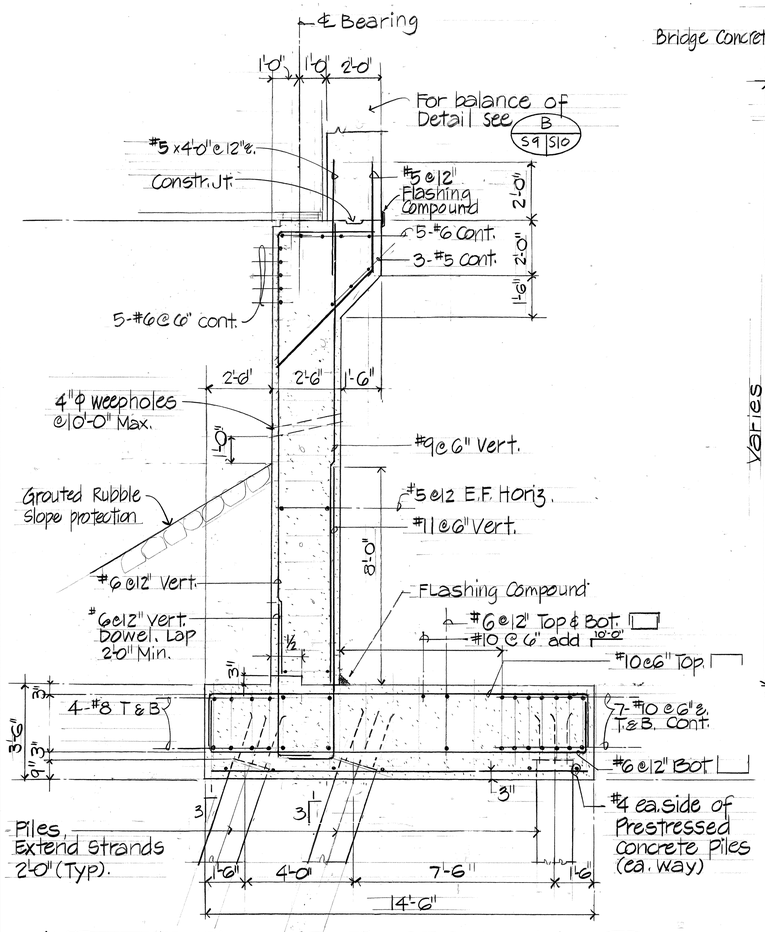


INBOUND ABUTMENT SECTION A S7 S9
Scale: 3/8" = 1'-0"

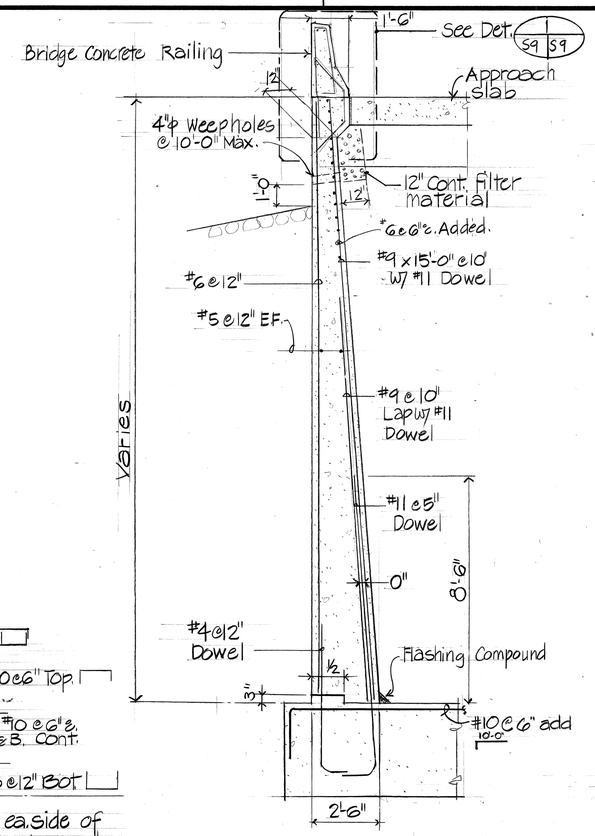


INBOUND ABUTMENT NORTH SIDE WALL SECTION B S7 S9
Scale: 3/8" = 1'-0"

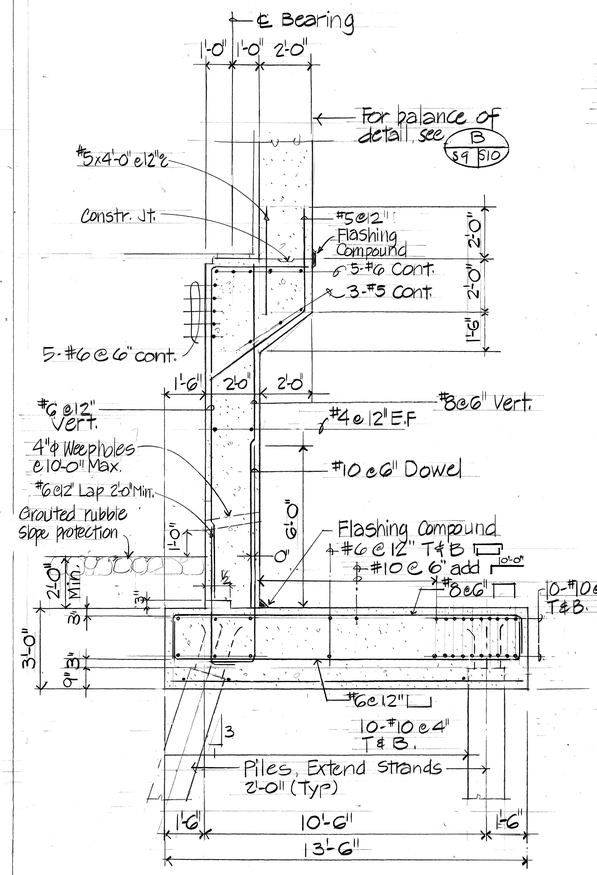


OUTBOUND ABUTMENT SECTION C S8 S9
Scale: 3/8" = 1'-0"

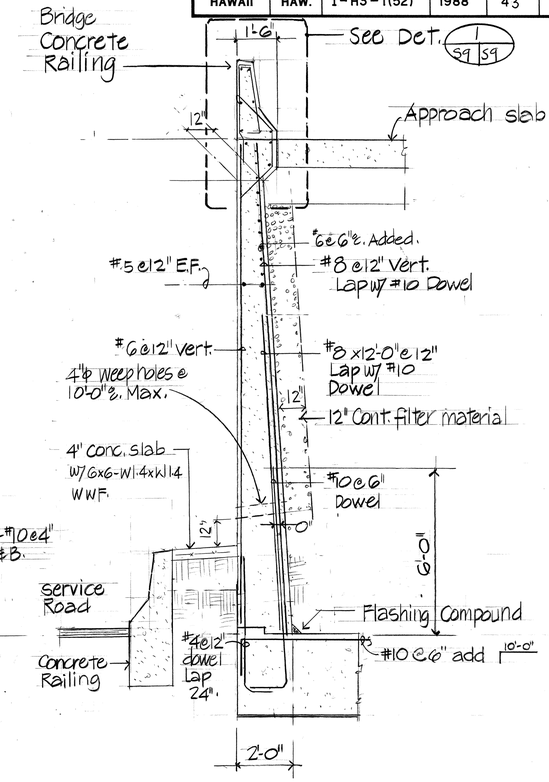


OUTBOUND ABUTMENT - NORTH SIDE WALL SECTION D S8 S9
Scale: 3/8" = 1'-0"

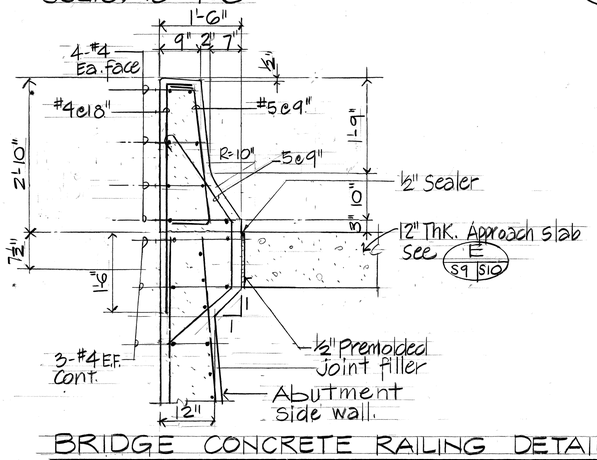


BRIDGE CONCRETE RAILING DETAIL 1 S9 S9
Scale: 3/4" = 1'-0"

| DATE | REVISION |
|---|---|
| 1/10/89 | Footing Reinforcing Revised |

AS BUILT

MYRON G. OKUDO REGISTERED PROFESSIONAL ENGINEER No. 4320-S HAWAII, U.S.A.

THIS WORK WAS PREPARED BY ME OR UNDER MY SUPERVISION

Myron Okudo

STATE OF HAWAII
DEPARTMENT OF TRANSPORTATION
HIGHWAYS DIVISION

## ABUTMENT DETAILS

INTERSTATE ROUTE H-3
F.A.I. PROJECT NO. I-H3-1(52):

SCALE: AS NOTED DATE: JULY 1988

SHEET No. S9 OF S26 SHEETS

ADD. 43

ORIGINAL PLAN | NOTE BOOK | No. | SURVEY PLOTTED BY | DRAWN BY | TRACED BY | DESIGNED BY | QUANTITIES BY | CHECKED BY | DATE

| FED. ROAD DIST. NO. | STATE | FED. AID PROJ. NO. | FISCAL YEAR | SHEET NO. | TOTAL SHEETS |
|---|---|---|---|---|---|
| HAWAII | HAW. | I-H3-1(52) | 1988 | 44 | 75 |

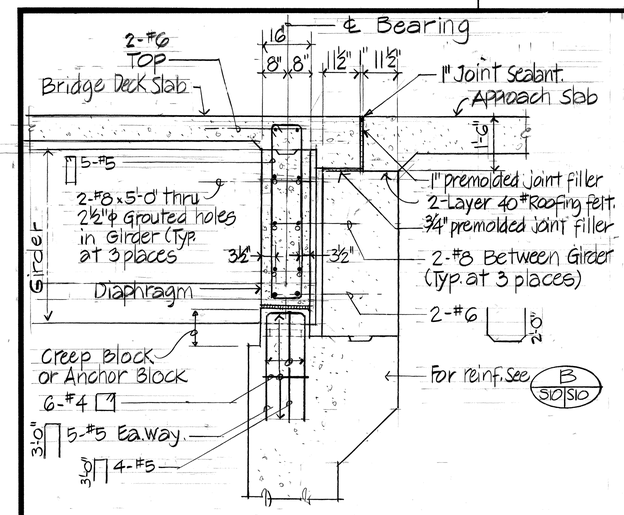


## TYPICAL SECTION THRU DIAPHRAGM AT ABUTMENT (A)

Scale: ½" = 1'-0" S8, S7, S8 S10

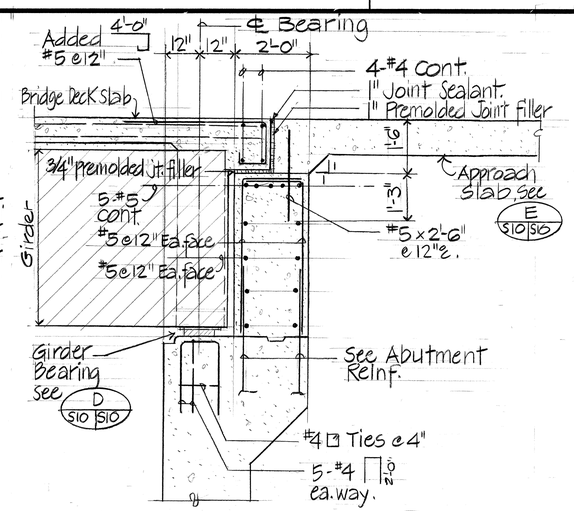


## SECTION (B)

Scale: ½" = 1'-0" S7, S8, S9, S10 S10

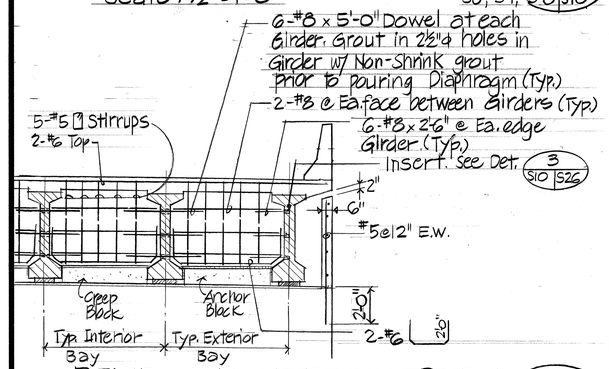


## REINF. AT DIAPHRAGM DETAIL (1)

Scale: ¼" = 1'-0" S8, S7 S10

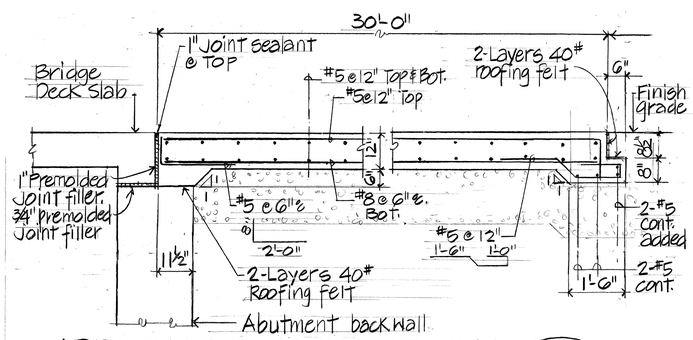


## APPROACH SLAB SECTION (E)

Scale: ½" = 1'-0" S9, S10 S10

Note: Concrete for Approach Slab to be considered part of concrete in Haiku Valley Bridges, except Reinforcing Steel for Approach Slab to be considered part of Reinforcing Steel in Haiku Valley Bridges.

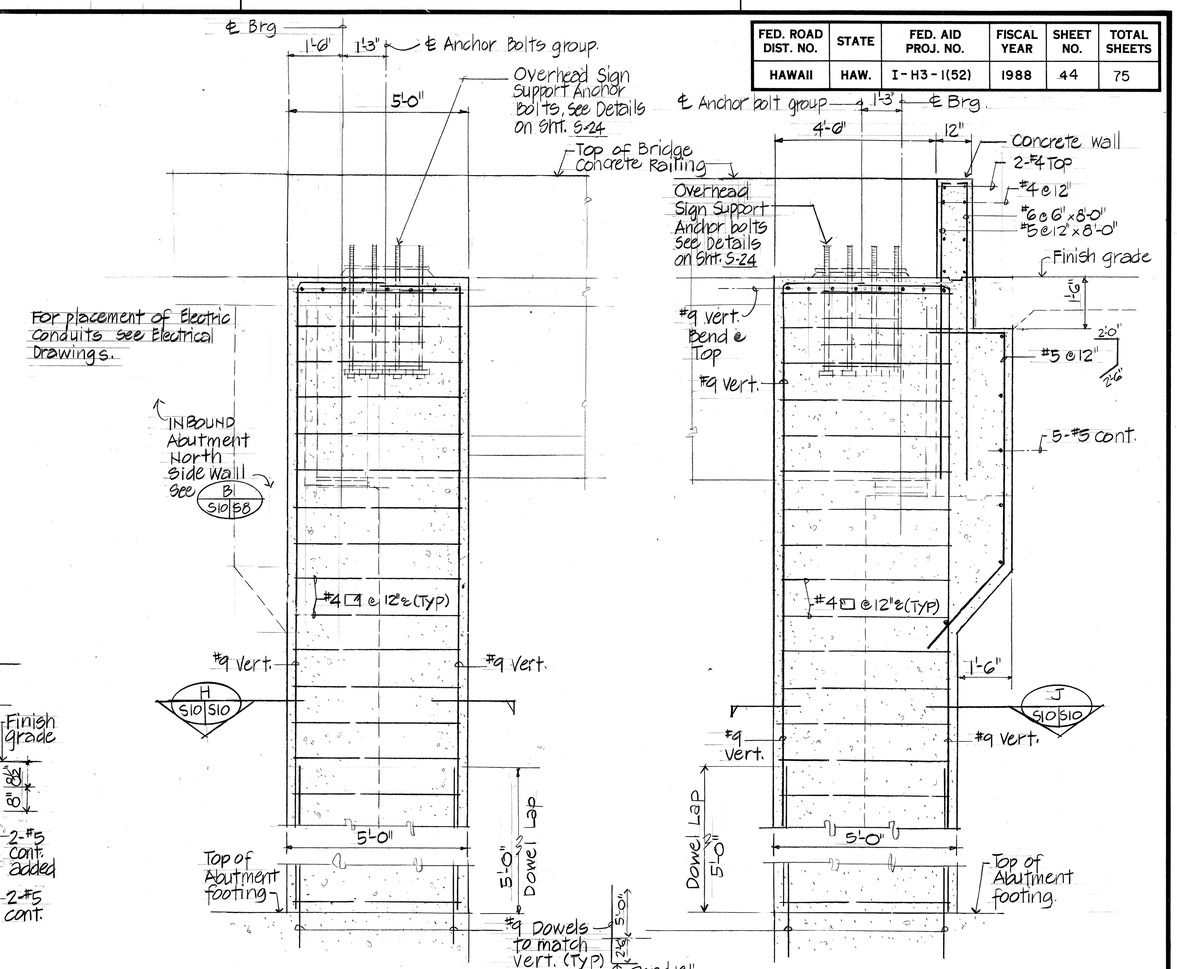


## LEFT SIDE - SECTION (F)

Scale: ½" = 1'-0" S7 S10

## RIGHT SIDE - SECTION (G)

Scale: ½" = 1'-0" S7 S10

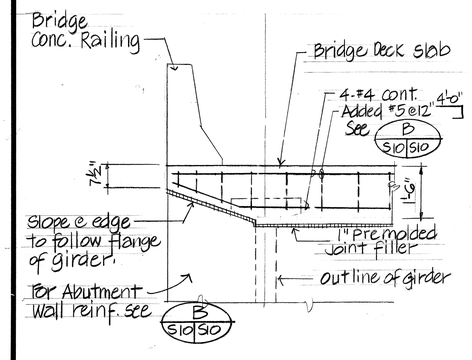


## SECTION (C)

Scale: ½" = 1'-0" S8 S10

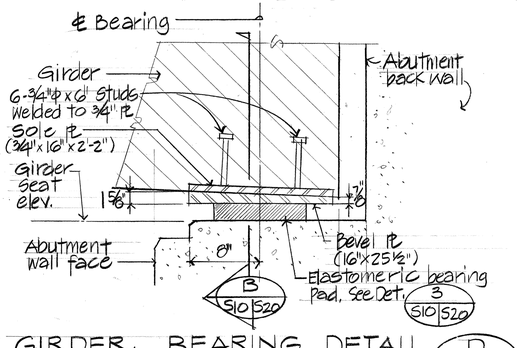


## GIRDER BEARING DETAIL (D)

Scale: 1½" = 1'-0" S7, S8, S10 S10

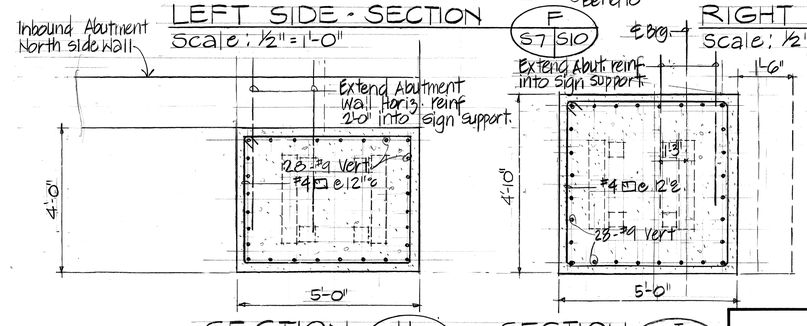


## SECTION (H)

Scale: ½" = 1'-0" S10 S10

## SECTION (J)

Scale: ½" = 1'-0" S10 S10

| DATE | REVISION |
|---|---|
| 1/10/89 | Detail D Revised |

AS BUILT

THIS WORK WAS PREPARED BY ME OR UNDER MY SUPERVISION

STATE OF HAWAII
DEPARTMENT OF TRANSPORTATION
HIGHWAYS DIVISION

# ABUTMENT DETAILS

INTERSTATE ROUTE H-3
F.A.I. PROJECT NO. I-H3-1(52)

SCALE: AS NOTED DATE: JULY 1988

SHEET No. S10 OF S26 SHEETS

ADD. 44

SURVEY PLOTTED BY
DRAWN BY
TRACED BY
DESIGNED BY
QUANTITIES BY
CHECKED BY
DATE

ORIGINAL PLAN
NOTE BOOK
No.

| FED. ROAD DIST. NO. | STATE | FED. AID PROJ. NO. | FISCAL YEAR | SHEET NO. | TOTAL SHEETS |
|---|---|---|---|---|---|
| HAWAII | HAW. | I-H3-1(52) | 1988 | 45 | 75 |

# FOOTING SCHEDULE

| TYPE OF FOOTING | FOOTING L1 | FOOTING L2 | FOOTING t1 | PEDESTAL D1 | PEDESTAL D2 | PEDESTAL t2 | BOT. REINFORCEMENT L1, reinf. | BOT. REINFORCEMENT L2, reinf. | TOP REINFORCEMENT L1, reinf. | TOP REINFORCEMENT L2, reinf. | REMARKS |
|---|---|---|---|---|---|---|---|---|---|---|---|
| F-1 | 23'-0" | 23'-0" | 5'-0" | — | — | — | 24-#9 x 22'-6" | 48-#11 x 22'-6" | #6 □ @ 12" ℄. | #6 □ @ 12" ℄. | |
| F-2 | 28'-0" | 32'-0" | 3'-6" | 20'-0" | 18'-0" | 2'-6" | 33-#11 x 27'-6" | 68-#11 x 31'-6" | #6 □ @ 12" ℄. | #6 □ @ 12" ℄. | |
| | | | | | | | | | | | |
| PF-1 | 27'-0" | 28'-0" | 7'-0" | — | — | — | 29-#11 x 26'-6" | 54-#14 | #6 □ @ 12" ℄. | #6 □ @ 12" ℄. | |
| PF-2 | 23'-0" | 23'-0" | 7'-0" | — | — | — | 24-#11 x 22'-6" | 48-#11 x 22'-6" | #6 □ @ 12" ℄. | #6 □ @ 12" ℄. | |
| PF-3 | 27'-0" | 33'-0" | 6'-4" | — | 17'-0" | 3'-6" | 33-#14 | 55-#14 | #6 □ @ 12" ℄. | #6 □ @ 12" ℄. | |
| PF-4 | 28'-0" | 33'-0" | 5'-0" | — | 17'-0" | 3'-6" | 40-#14 | 52-#14 | #6 □ @ 12" ℄. | #6 □ @ 12" ℄. | |

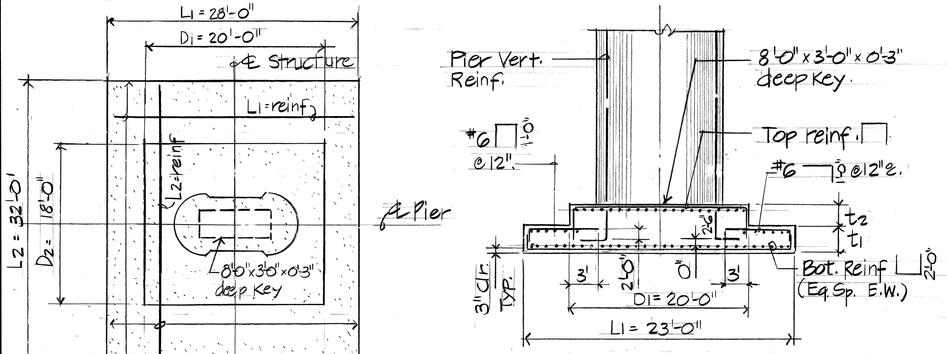


PLAN

ELEVATION

FOOTING TYPE F-2

Not to scale

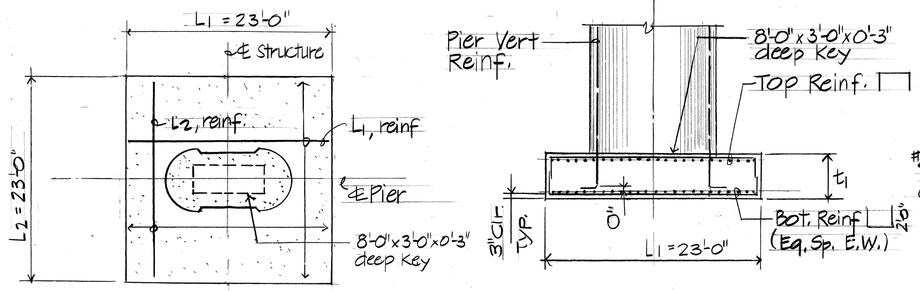


PLAN

ELEVATION

FOOTING TYPE F-1

Not to scale:

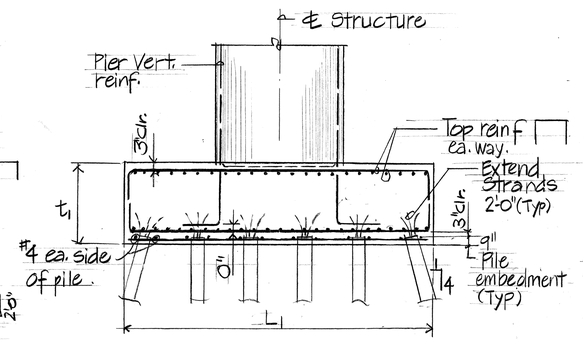


ELEVATION

FOOTING TYPE PF-1 & PF-2

Not to scale:

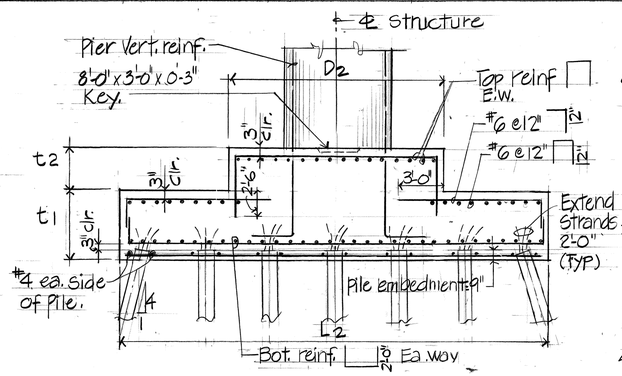


ELEVATION

FOOTING TYPE PF-3 & PF-4

Not to scale:

Notes:

1. Footing and Pedestal, concrete to be placed monolithically.
2. The 4 corners and center of each spread footing shall be probed to a depth 10' below bottom of footing elevation to detect cavities in the rock formations. The drilling of the probes shall be considered incidental to Concrete in footings for Haiku Valley bridges.
3. The contractor shall provide the equipment that may be required to break up and/or remove obstructions so that the piles reach the required tip elevation, attain the required bearing capacity and the foundation installed in accordance with the drawings.
4. Spread Footings shall bear on natural undisturbed material. Irregular, non-uniform surfaces at bottom of Footing may occur in excavations into Basalt Rock. All irregularities, discontinuities, loose areas and voids shall be filled with Class 'D' concrete (min.)

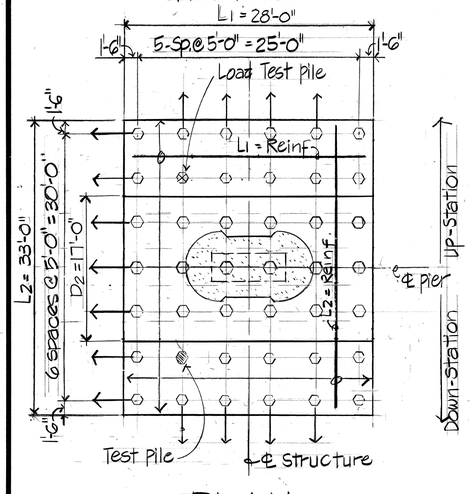


PLAN

FOOTING TYPE PF-4

Scale: 1/8" = 1'-0"

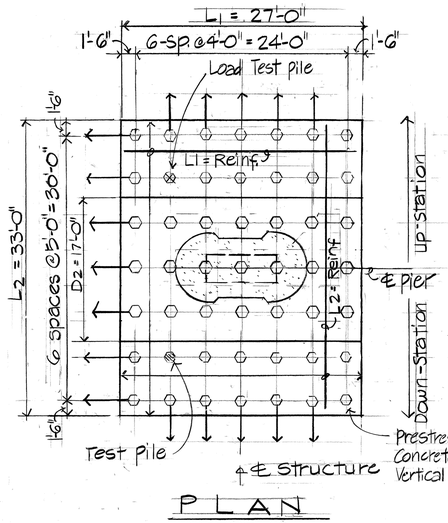


PLAN

FOOTING TYPE PF-3

Scale: 1/8" = 1'-0"

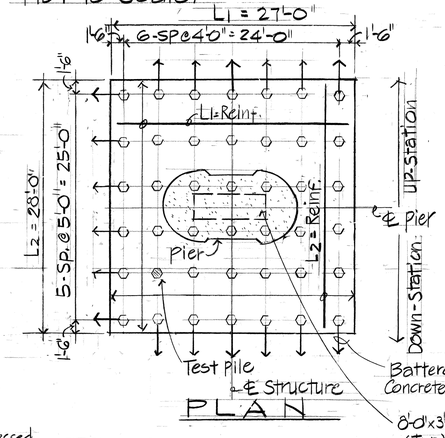


PLAN

FOOTING TYPE PF-1

Scale: 1/8" = 1'-0"

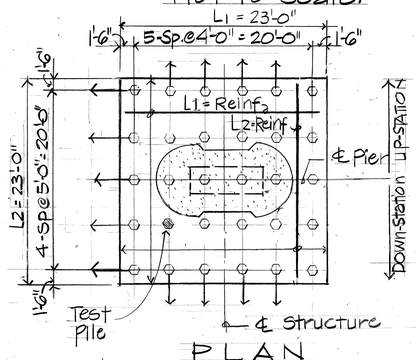


PLAN

FOOTING TYPE PF-2

Scale: 1/8" = 1'-0"

| DATE | REVISION |
|---|---|
| 9/11/89 | Revised Schedule, Elevations & Plans for PF3 & PF4. |

AS BUILT

THIS WORK WAS PREPARED BY ME OR UNDER MY SUPERVISION

STATE OF HAWAII
DEPARTMENT OF TRANSPORTATION
HIGHWAYS DIVISION

## FOUNDATION DETAILS & SCHEDULE

INTERSTATE ROUTE H-3
F.A.I. PROJECT NO. I-H3-1(52):

SCALE: AS NOTED DATE: JULY 1988

SHEET No. S11 OF S26 SHEETS

SURVEY PLOTTED BY
DRAWN BY
TRACED BY
DESIGNED BY
QUANTITIES BY
CHECKED BY
DATE

ORIGINAL PLAN
NOTE BOOK
No.

C.O.45

S11

42

| FED. ROAD DIST. NO. | STATE | FED. AID PROJ. NO. | FISCAL YEAR | SHEET NO. | TOTAL SHEETS |
|---|---|---|---|---|---|
| HAWAII | HAW. | I-H3-1(52) | 1988 | 46 | 75 |

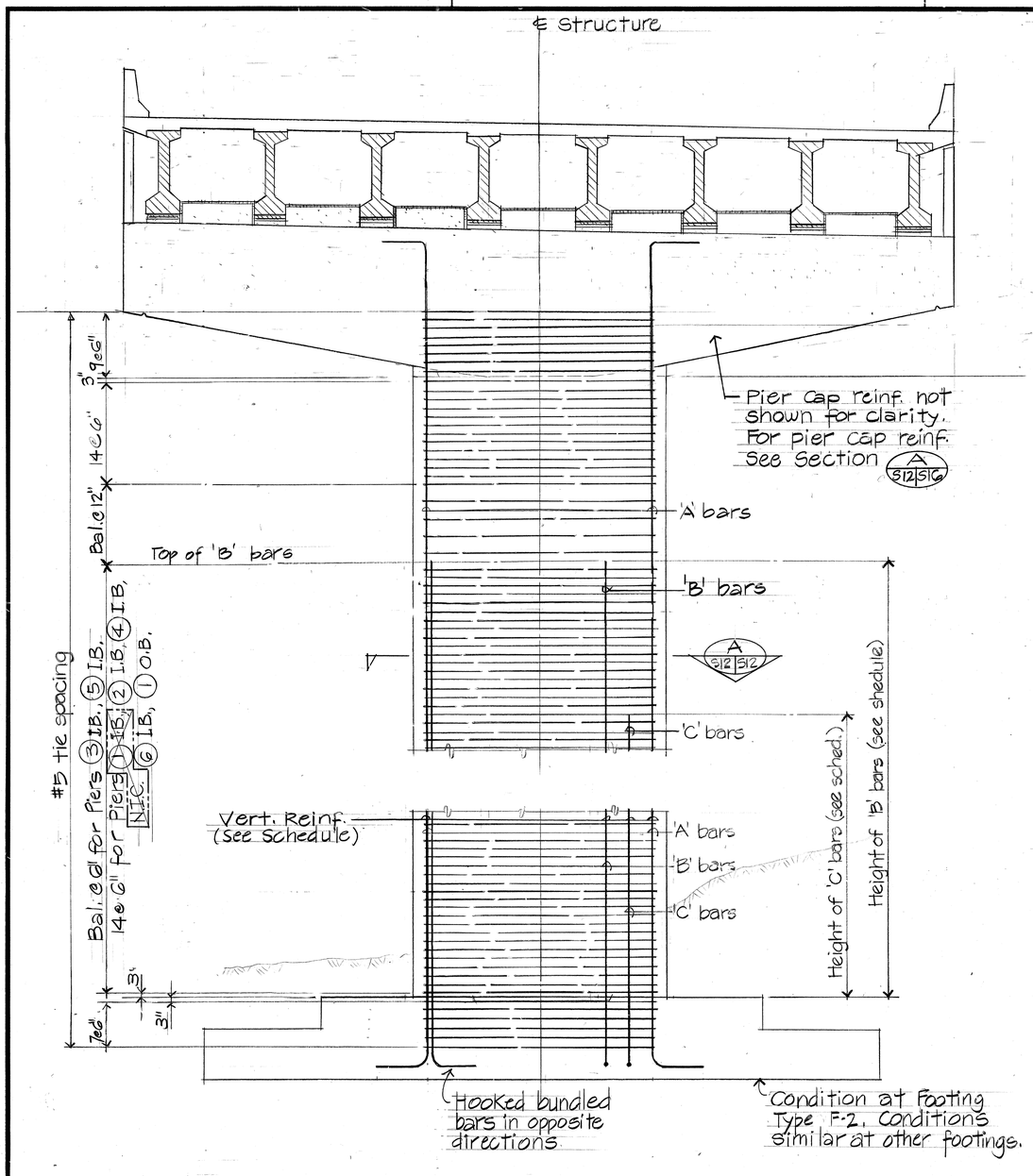


PIER ELEVATION SECTION
Scale: 1/4" = 1'-0"

Note.
Alternate location of hooks when placing successive layers of ties.

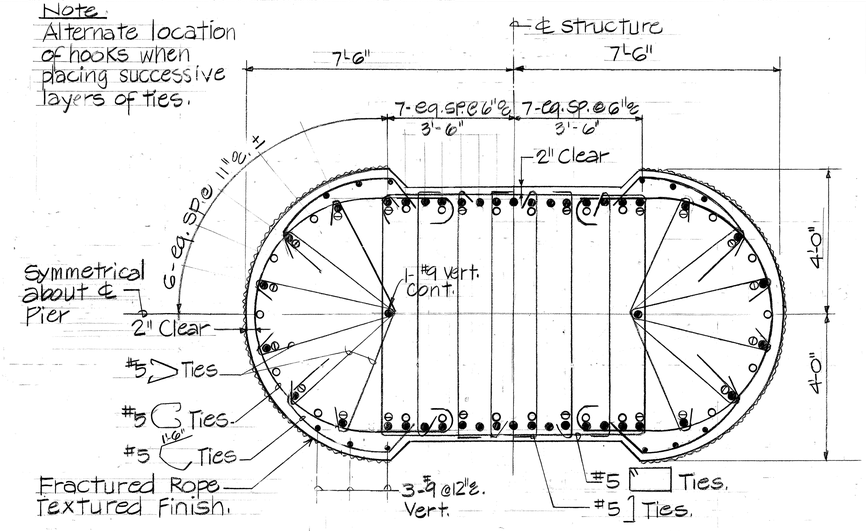


• and • Denotes Bars to be placed in two-bar Bundles.

Dimensions do not include depth of Fractured Rope Textured Finish.

PIER - REINF. PLAN
Scale: 1/2" = 1'-0"
A S12 S12

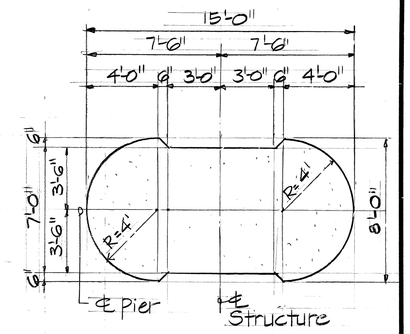


PIER - PLAN
Scale: 1/4" = 1'-0"

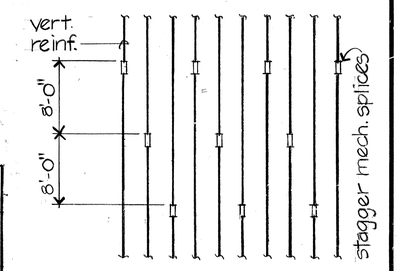


All splices to develop not less than 90% of the specified ultimate tensile strength of the reinforcing steel.

MECH. SPLICE DET. 1 S12 S12
not to scale

## PIER VERTICAL REINFORCEMENT SCHEDULE

| Pier Mark | 'A' bar • | 'B' bar o | 'C' bar o | Remarks |
|---|---|---|---|---|
| N.I.C. → ~~① I.B.~~ | 42-#18 | — | — | Future Pier by Others |
| ② I.B. | 42-#18 | — | | |
| ③ I.B. | | 20-#18x55' | 22-#18x55' | |
| ④ I.B. | | — | — | |
| ⑤ I.B. | | 20-#18x30' | — | |
| ⑥ I.B. | | — | — | |
| ① O.B. | ↓ | — | — | |

NOTES:
1. All #18 Pier vertical reinforcement shall conform to ASTM A615, Grade 60.
2. Pier ties shall conform to ASTM A615, Grade 40.
3. Height of bars to be measured from top of footing or top of footing pedestal. 'A' bars to be continuous over the full height of Pier. 'B' and 'C' bars are extended as scheduled.
4. All #18 bars to be mechanically spliced. All other vertical bars to be class C tension lap splice.

MYRON G. OKUBO REGISTERED PROFESSIONAL ENGINEER No. 4320-S HAWAII, U.S.A.
THIS WORK WAS PREPARED BY ME OR UNDER MY SUPERVISION
Myron Okubo

STATE OF HAWAII
DEPARTMENT OF TRANSPORTATION
HIGHWAYS DIVISION

**PIER SCHEDULE**

INTERSTATE ROUTE H-3
F.A.I. PROJECT NO. I-H3-1(52):

SCALE: AS NOTED DATE: JULY 1988
SHEET No. S12 OF S26 SHEETS

| DATE | REVISION |
|---|---|
| 9/11/89 | Revised Schedule and Detail A |
| 1/10/89 | I.B. Pier 1 Deleted |

AS BUILT

C.O. ADD. 46

ORIGINAL PLAN | SURVEY PLOTTED BY | DRAWN BY | TRACED BY | DESIGNED BY | QUANTITIES BY | CHECKED BY | DATE
NOTE BOOK No.

| FED. ROAD DIST. NO. | STATE | FED. AID PROJ. NO. | FISCAL YEAR | SHEET NO. | TOTAL SHEETS |
|---|---|---|---|---|---|
| HAWAII | HAW. | I-H3-1(52) | 1988 | 47 | 75 |

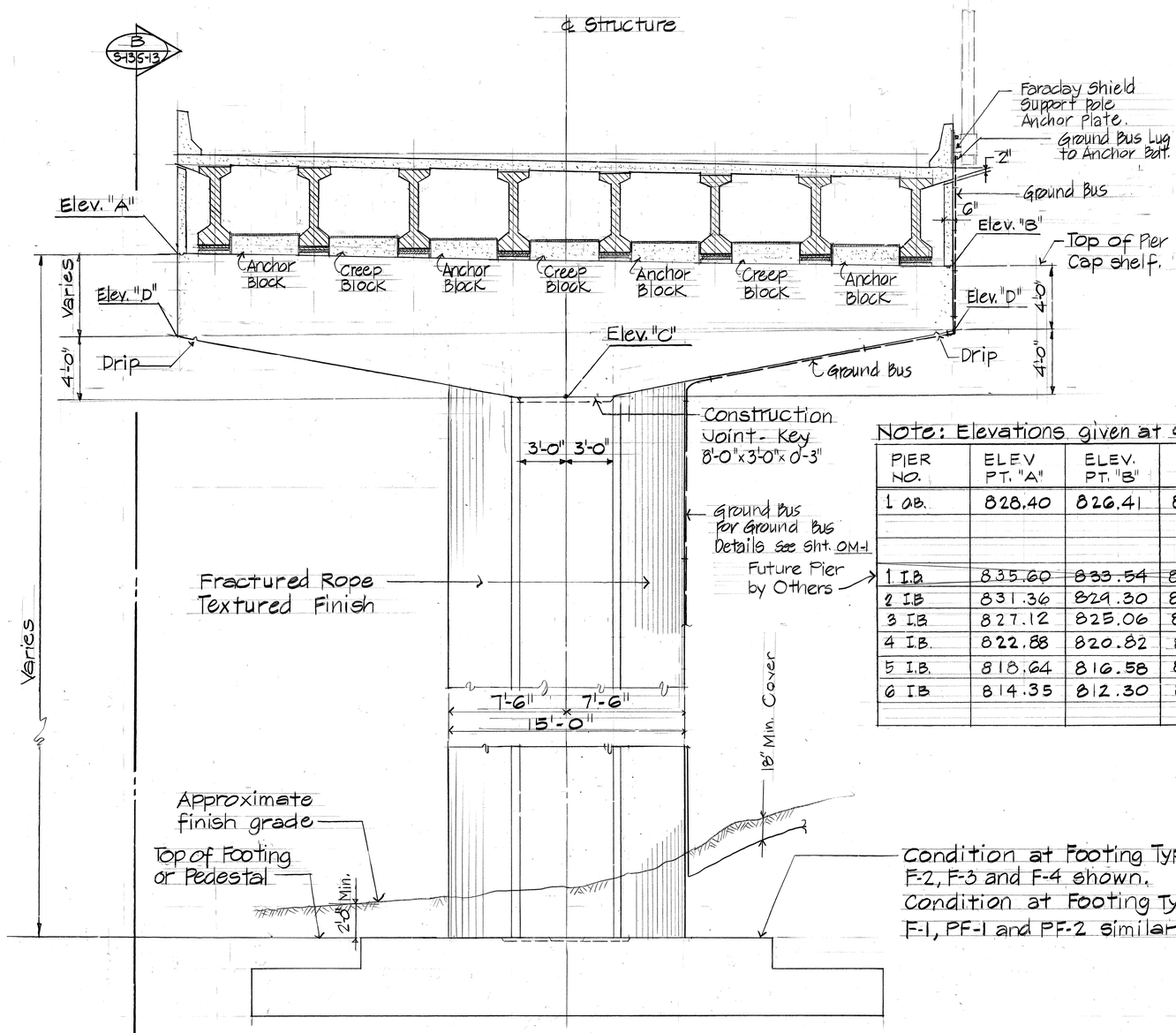


(LOOKING UPSTATION)

PIER ELEVATION (A S13 S13)

Scale: 1/4" = 1'-0"

Note: Elevations given at ℄ Pier.

| PIER NO. | ELEV PT. "A" | ELEV. PT. "B" | ELEV. PT. "C" | ELEV. PT. "D" |
|---|---|---|---|---|
| 1 OB. | 828.40 | 826.41 | 818.41 | 822.41 |
| | | | | |
| | | | | |
| 1 I.B. | 835.60 | 833.54 | 825.54 | 829.54 |
| 2 I.B. | 831.36 | 829.30 | 821.30 | 825.30 |
| 3 I.B. | 827.12 | 825.06 | 817.06 | 821.06 |
| 4 I.B. | 822.88 | 820.82 | 812.82 | 816.82 |
| 5 I.B. | 818.64 | 816.58 | 808.58 | 812.58 |
| 6 I.B. | 814.35 | 812.30 | 804.30 | 808.30 |
| | | | | |

Future Pier by Others

Condition at Footing Types F-2, F-3 and F-4 shown. Condition at Footing Types F-1, PF-1 and PF-2 similar.

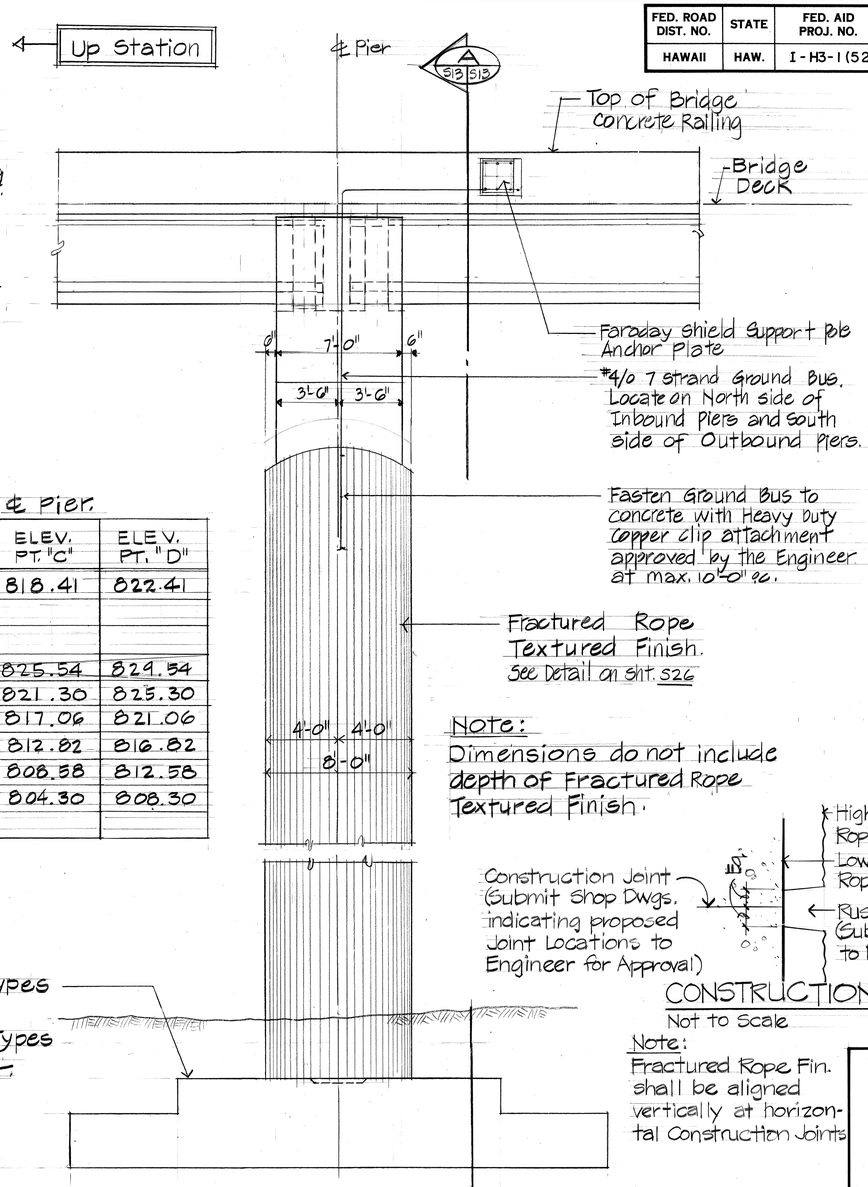


SIDE VIEW (B S13 S13)

Scale: 1/4" = 1'-0"

Note: Dimensions do not include depth of Fractured Rope Textured Finish.

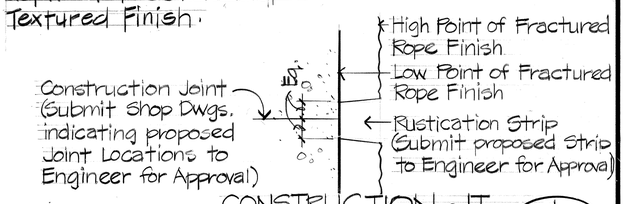


CONSTRUCTION JT. (1 S13 S13)

Not to Scale

Note: Fractured Rope Fin. shall be aligned vertically at horizontal Construction Joints

MYRON G. OKUSO REGISTERED PROFESSIONAL ENGINEER No. 4320-S HAWAII, U.S.A.

THIS WORK WAS PREPARED BY ME OR UNDER MY SUPERVISION

Myron Okuso

STATE OF HAWAII
DEPARTMENT OF TRANSPORTATION
HIGHWAYS DIVISION

**PIER DETAILS**

INTERSTATE ROUTE H-3
F.A.I. PROJECT NO. I-H3-1(52):

SCALE: 1/4" = 1'-0" DATE: JULY 1988

SHEET NO. S13 OF S26 SHEETS

| DATE | REVISION |
|---|---|
| 1/10/89 | I.B. Pier 1 Deleted, I.B. Pier 3 Control Elevations Revised |

AS BUILT

ORIGINAL PLAN: SURVEY PLOTTED BY ____ DATE; DRAWN BY; TRACED BY; DESIGNED BY; QUANTITIES BY; CHECKED BY; NOTE BOOK; No.

ADD. 47

| FED. ROAD DIST. NO. | STATE | FED. AID PROJ. NO. | FISCAL YEAR | SHEET NO. | TOTAL SHEETS |
|---|---|---|---|---|---|
| HAWAII | HAW. | I-H3-1(52) | 1988 | 48 | 75 |

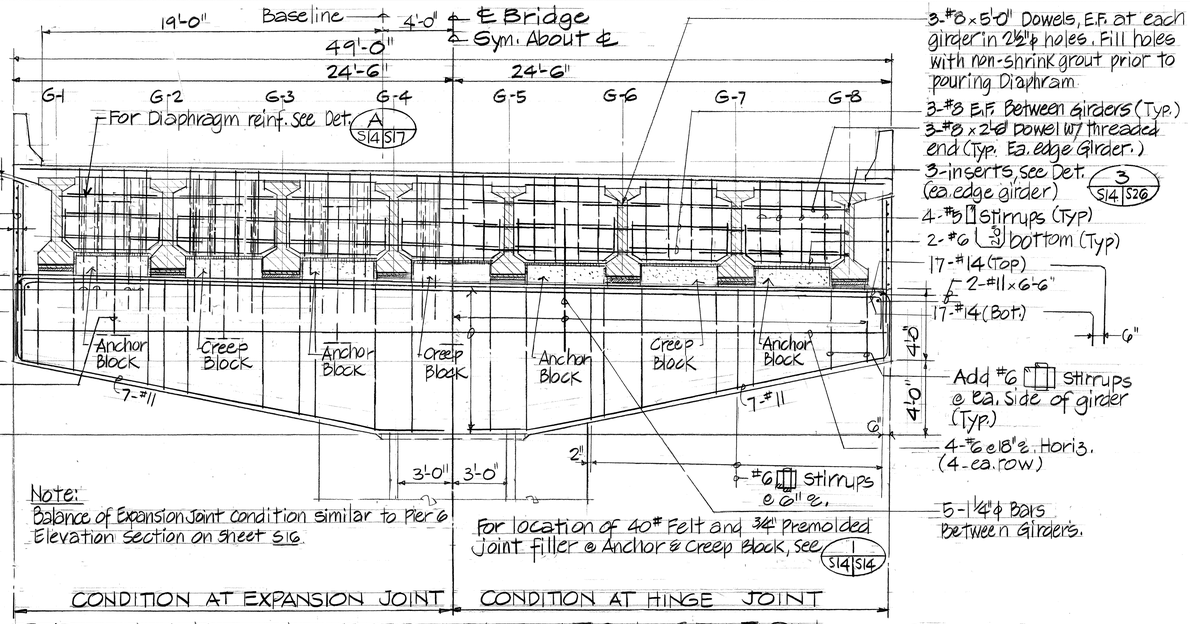


## TYPICAL INBOUND PIER ELEVATION SECTION

Scale: ¼" = 1'-0"  S16, A S14 S14

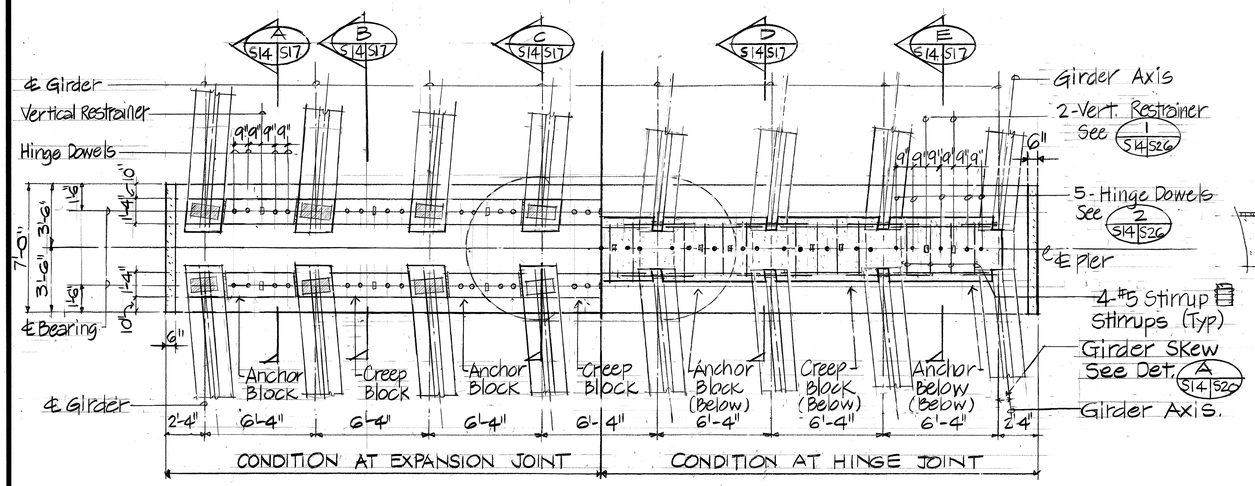


## PLAN - SECTION

Scale: ¼" = 1'-0"

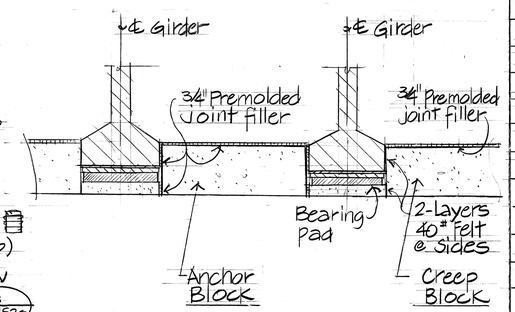


## ANCHOR & CREEP BLOCK DETAIL

Scale: ½" = 1'-0"  S7, S8, 1 S14 S14

## FUTURE SPANS

| GIRDER MARK SPAN/GIRDER | UP-STATION GIRDER SEAT ELEVATION | OUTBOUND |
|---|---|---|
| F G1 | | 828.72 |
| F G2 | | 828.46 |
| F G3 | | 828.21 |
| F G4 | | 827.96 |
| F G5 | | 827.70 |
| F G6 | | 827.45 |
| F G7 | | 827.20 |
| F G8 | | 826.94 |

## INBOUND

| Down-Sta. Girder Seat Elevation | Girder Mark Span | Girder | Up-Station Girder Seat Elevation |
|---|---|---|---|
| 835.75 | 1 | G1 | 831.68 |
| 835.48 | 1 | G2 | 831.41 |
| 835.22 | 1 | G3 | 831.15 |
| 834.95 | 1 | G4 | 830.88 |
| 834.68 | 1 | G5 | 830.61 |
| 834.42 | 1 | G6 | 830.35 |
| 834.15 | 1 | G7 | 830.08 |
| 833.89 | 1 | G8 | 829.82 |
| 831.51 | 2 | G1 | 827.44 |
| 831.24 | 2 | G2 | 827.17 |
| 830.98 | 2 | G3 | 826.91 |
| 830.71 | 2 | G4 | 826.64 |
| 830.44 | 2 | G5 | 826.37 |
| 830.18 | 2 | G6 | 826.11 |
| 829.91 | 2 | G7 | 825.84 |
| 829.65 | 2 | G8 | 825.58 |
| 827.27 | 3 | G1 | 823.20 |
| 827.00 | 3 | G2 | 822.93 |
| 826.74 | 3 | G3 | 822.67 |
| 826.47 | 3 | G4 | 822.40 |
| 826.20 | 3 | G5 | 822.13 |
| 825.94 | 3 | G6 | 821.87 |
| 825.67 | 3 | G7 | 821.60 |
| 825.41 | 3 | G8 | 821.34 |
| 823.03 | 4 | G1 | 818.96 |
| 822.76 | 4 | G2 | 818.69 |
| 822.50 | 4 | G3 | 818.43 |
| 822.23 | 4 | G4 | 818.16 |
| 821.96 | 4 | G5 | 817.89 |
| 821.70 | 4 | G6 | 817.63 |
| 821.43 | 4 | G7 | 817.36 |
| 821.17 | 4 | G8 | 817.10 |
| 818.79 | 5 | G1 | 814.72 |
| 818.52 | 5 | G2 | 814.45 |
| 818.26 | 5 | G3 | 814.19 |
| 817.99 | 5 | G4 | 813.92 |
| 817.72 | 5 | G5 | 813.65 |
| 817.46 | 5 | G6 | 813.39 |
| 817.19 | 5 | G7 | 813.12 |
| 816.93 | 5 | G8 | 812.86 |

## INBOUND

| Down-Sta. Girder Seat Elevation | Girder Mark Span | Girder | Up-Station Girder Seat Elevation |
|---|---|---|---|
| 814.51 | 6 | G1 | 810.35 |
| 814.30 | 6 | G2 | 810.06 |
| 814.09 | 6 | G3 | 809.77 |
| 813.89 | 6 | G4 | 809.48 |
| 813.68 | 6 | G5 | 809.19 |
| 813.47 | 6 | G6 | 808.90 |
| 813.27 | 6 | G7 | 808.61 |
| 813.06 | 6 | G8 | 808.32 |
| 812.85 | 6 | G9 | 808.03 |
| 812.65 | 6 | G10 | 807.74 |

Notes:
1. Refer to Bridge Framing Plan for Girder Designation. See Sheet S-5
2. For Girder Seat, see B S14 S20

## OUTBOUND

| Down-Sta. Girder Seat Elevation | Girder Mark Span | Girder | Up-Station Girder Seat Elevation |
|---|---|---|---|
| 828.55 | 1 | G1 | 824.36 |
| 828.29 | 1 | G2 | 824.11 |
| 828.04 | 1 | G3 | 823.86 |
| 827.79 | 1 | G4 | 823.60 |
| 827.53 | 1 | G5 | 823.35 |
| 827.28 | 1 | G6 | 823.09 |
| 827.03 | 1 | G7 | 822.84 |
| 826.77 | 1 | G8 | 822.59 |

Notes:
1. Bearing Pads, Anchor Blocks, & Creep Blocks are aligned with the Axis of the Girders. For Girder skew, see Detail A S14 S20
2. Vertical Restrainers & Hinge Dowels, centered in Anchor Blocks, Creep Blocks and Diaphragm. Balance of Diaphragm reinforcing similar, as shown on Pier Elevation on sheet S16
3. Outbound pier details for expansion joint condition similar. Outbound girders spaced at 6'-6" ℄.

ORIGINAL PLAN | NOTE BOOK No. | SURVEY PLOTTED BY | PROJECT NO. | TRACED BY | DESIGNED BY | QUANTITIES BY | CHECKED BY | DATE

| DATE | REVISION |
|---|---|
| 1/10/89 | Girder Seat Elevations Deleted |

AS BUILT

AARON G. OKUBO REGISTERED PROFESSIONAL ENGINEER No. 4320-S HAWAII, U.S.A.

THIS WORK WAS PREPARED BY ME OR UNDER MY SUPERVISION

Aaron Okubo

STATE OF HAWAII
DEPARTMENT OF TRANSPORTATION
HIGHWAYS DIVISION

# TYPICAL PIER DETAILS

INTERSTATE ROUTE H-3
F.A.I. PROJECT NO. I-H3-1(52)

SCALE: AS NOTED  DATE: JULY 1988

SHEET No. S14 OF S26 SHEETS

ADD.48

S14

45

| FED. ROAD DIST. NO. | STATE | FED. AID PROJ. NO. | FISCAL YEAR | SHEET NO. | TOTAL SHEETS |
|---|---|---|---|---|---|
| HAWAII | HAW. | I-H3-1(52) | 1988 | 49 | 75 |

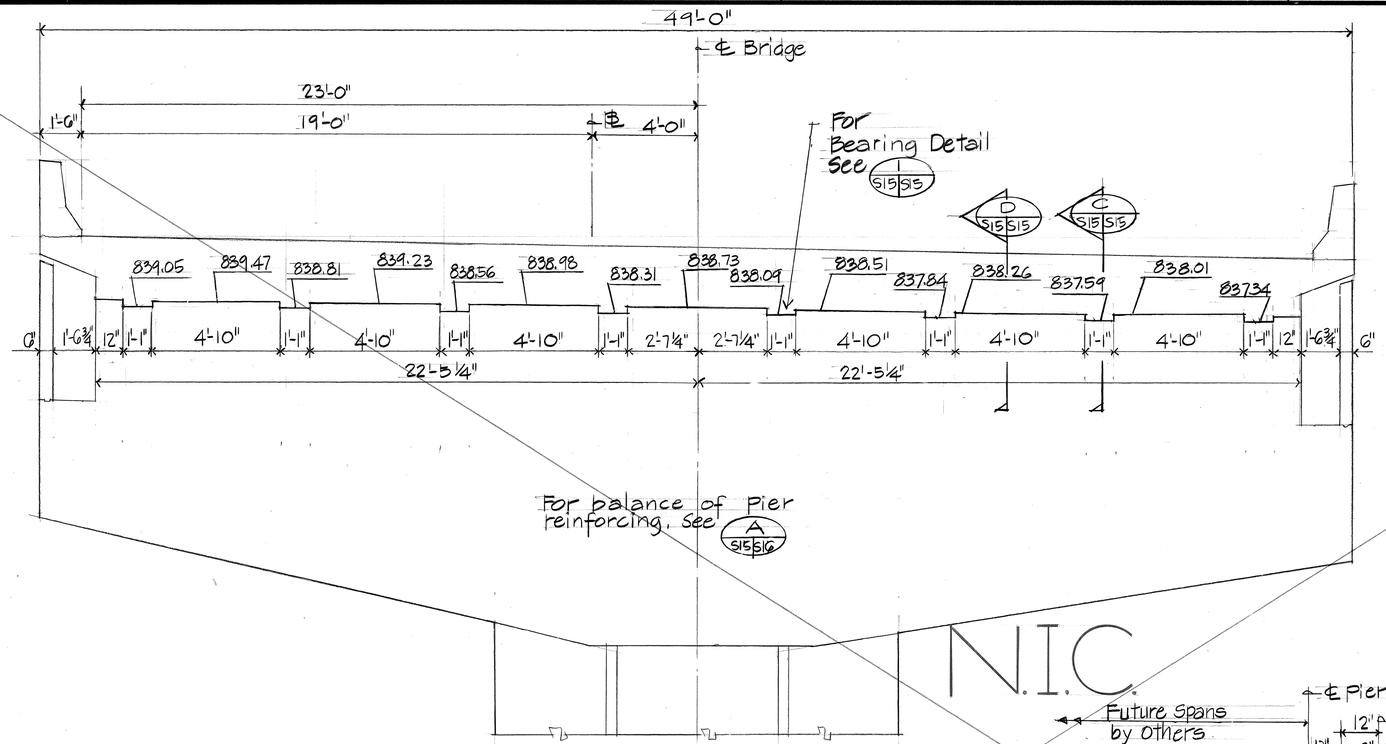


PIER 1 INBOUND • ELEVATION SECTION A S15 S15
Scale: 3/8" = 1'-0"

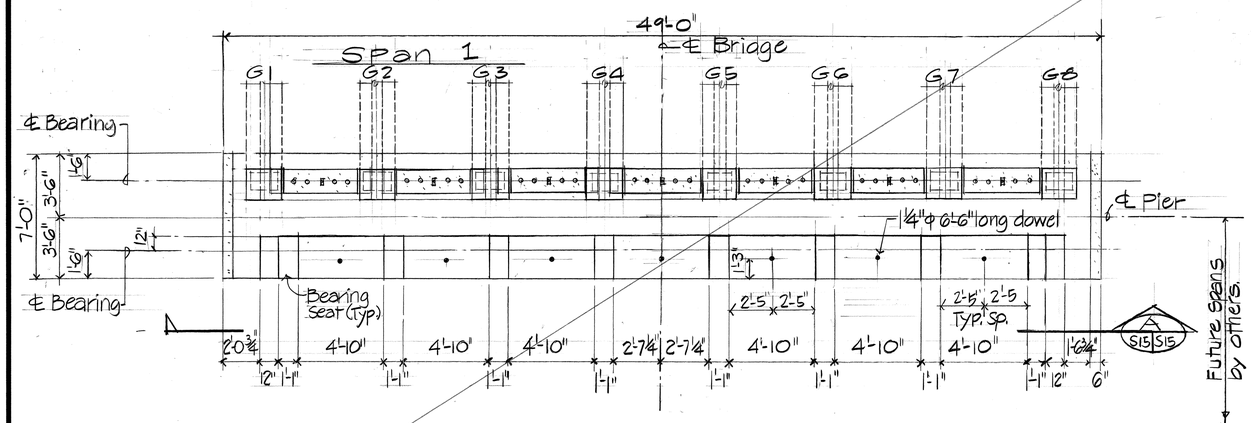


PIER 1 INBOUND • PLAN SECTION B S15 S15
Scale: ¼" = 1'-0"

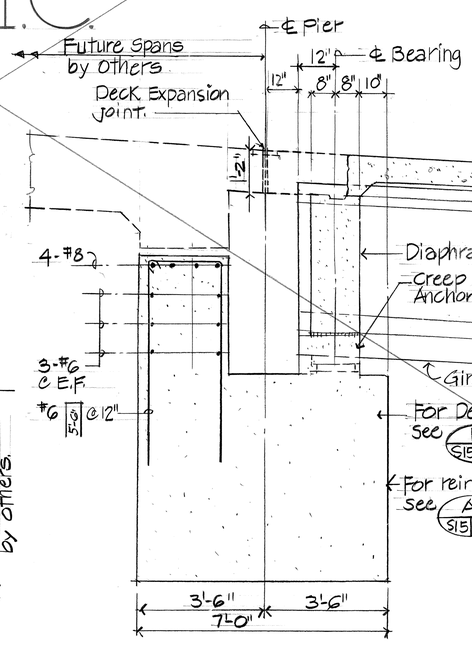


SECTION C S15 S15
Scale: ½" = 1'-0"

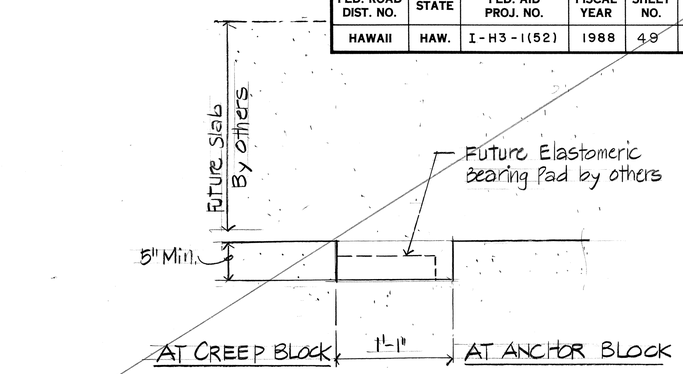


BEARING DETAIL 1 S15 S15
Scale: 1½" = 1'-0"

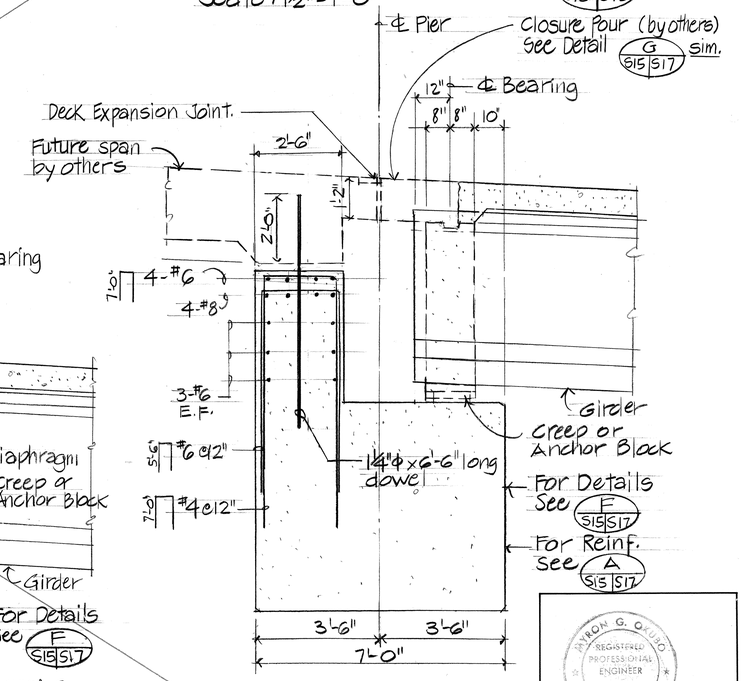


SECTION D S15 S15
Scale: ½" = 1'-0"

Note:
Contractor to procure selected Expansion Joint as required. Expansion Joint to be installed during construction of Future Span to Haiku Portal. Contractor to furnish strip seal, Frames, Anchors and other remaining accessories to the Engineer.

| DATE | REVISION |
|---|---|
| 1/10/89 | Sheet Deleted |

AS BUILT

THIS WORK WAS PREPARED BY ME OR UNDER MY SUPERVISION

STATE OF HAWAII
DEPARTMENT OF TRANSPORTATION
HIGHWAYS DIVISION

PIER 1 INBOUND - SECTIONS

INTERSTATE ROUTE H-3
F.A.I. PROJECT NO. I-H3-1(52):

SCALE: AS NOTED DATE: JULY 1988

SHEET No. S15 OF S26 SHEETS

ADD. 49

ORIGINAL PLAN | NOTE BOOK No. | SURVEY PLOTTED BY | DRAWN BY | TRACED BY | DESIGNED BY | QUANTITIES BY | CHECKED BY | DATE

S15

| FED. ROAD DIST. NO. | STATE | FED. AID PROJ. NO. | FISCAL YEAR | SHEET NO. | TOTAL SHEETS |
|---|---|---|---|---|---|
| HAWAII | HAW. | I-H3-1(52) | 1988 | 50 | 75 |

Notes:

1. Bearing Pads, Anchor Blocks, & Creep Blocks are aligned with the Axis of the Girders. For Girder skew see Detail A S16 S20
2. Vertical Restrainers and Hinge Dowels Centered in Anchor Blocks, Creep Blocks and Diaphragms.

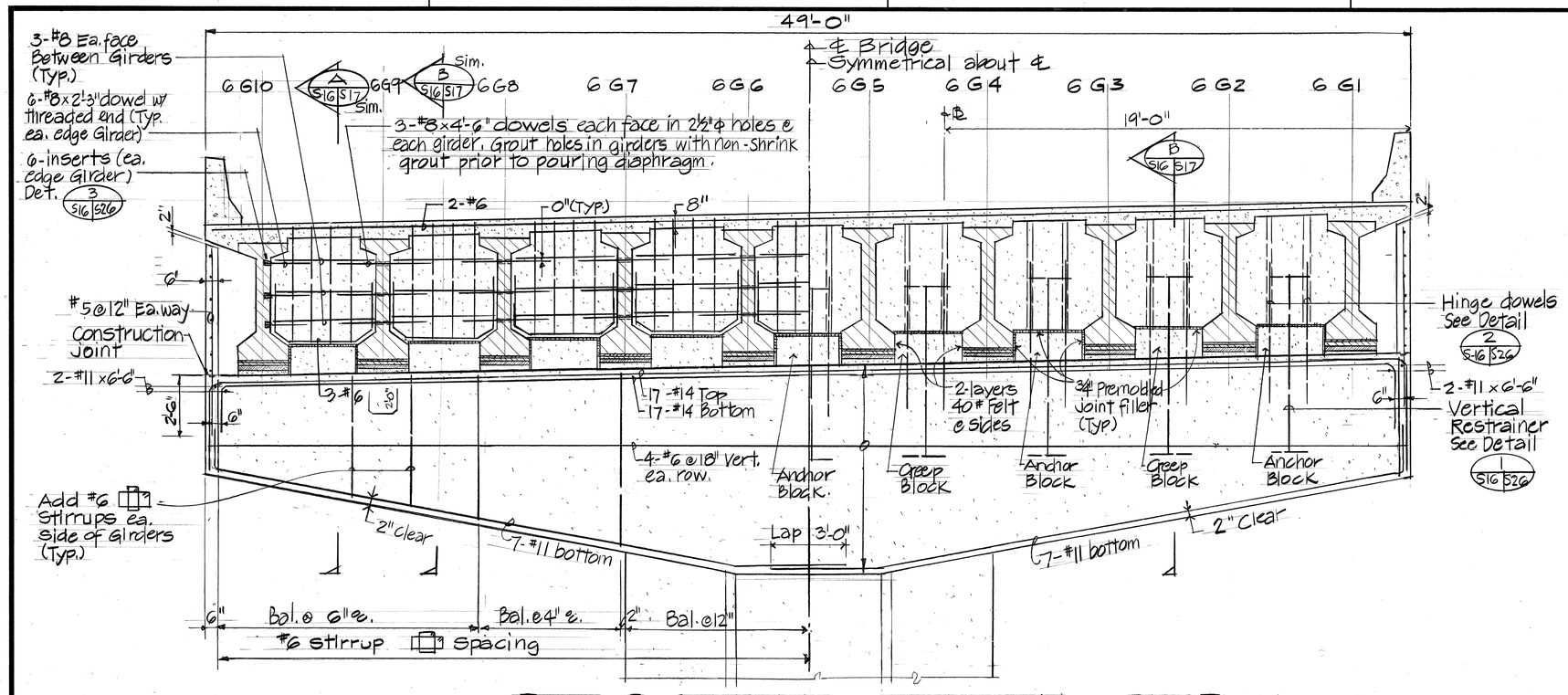


PIER 6 INBOUND ELEVATION • SECTION A S15, S12 S16

Scale: 3/8" = 1'-0"

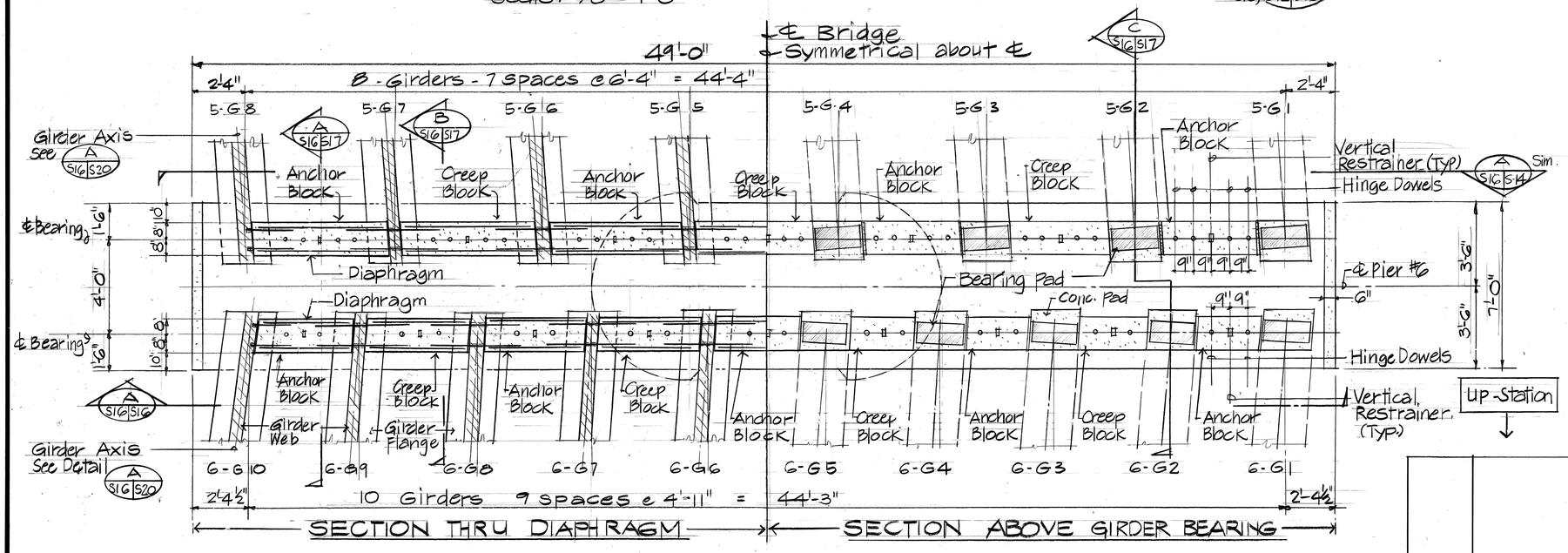


PIER 6 INBOUND PLAN • SECTION B S15, S16 S16

Scale: 3/8" = 1'-0"

| DATE | REVISION |
|---|---|
| 1/10/89 | Detail A Revised |

AS BUILT

THIS WORK WAS PREPARED BY ME OR UNDER MY SUPERVISION

Myron Okubo

MYRON G. OKUBO REGISTERED PROFESSIONAL ENGINEER HAWAII U.S.A.

STATE OF HAWAII
DEPARTMENT OF TRANSPORTATION
HIGHWAYS DIVISION

## PIER 6 INBOUND DETAILS

INTERSTATE ROUTE H-3
F.A.I. PROJECT NO. I-H3-1(52):

SCALE: AS NOTED DATE: JULY 1988

SHEET No. S16 OF S26 SHEETS

ORIGINAL PLAN | SURVEY PLOTTED BY | DRAWN BY | TRACED BY | DESIGNED BY | QUANTITIES BY | CHECKED BY | NOTE BOOK | No. | DATE

ADD.50

S16

47

| FED. ROAD DIST. NO. | STATE | FED. AID PROJ. NO. | FISCAL YEAR | SHEET NO. | TOTAL SHEETS |
|---|---|---|---|---|---|
| HAWAII | HAW. | I-H3-1(52) | 1988 | 51 | 75 |

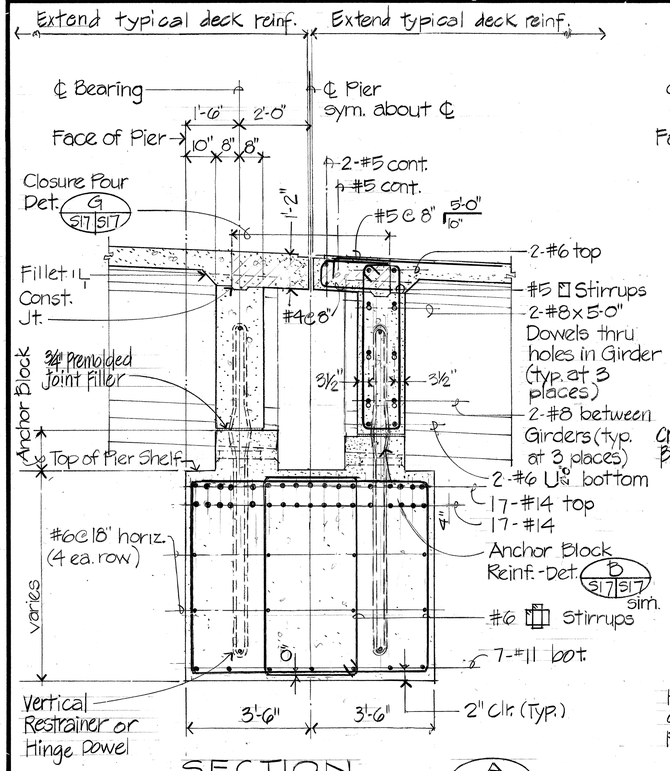


SECTION A
Scale: ½" = 1'-0" S16, S14, S15, S17 S17

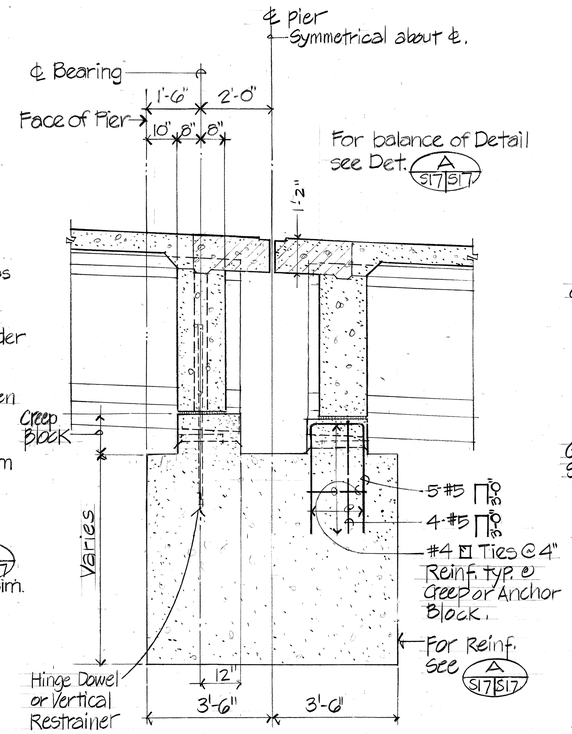


SECTION B
Scale: ½" = 1'-0" S16, S14, S15, S17 S17

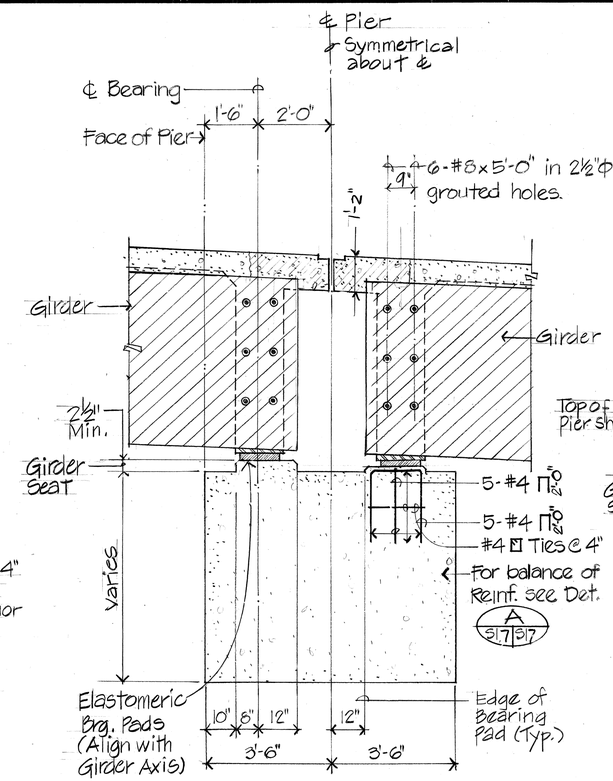


SECTION C
scale ½" = 1'-0" S16, S14, S15 S17

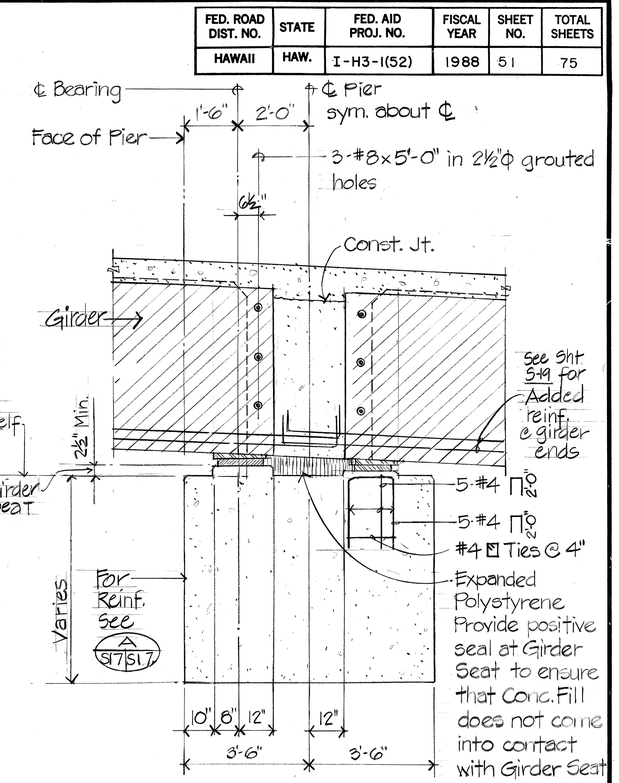


SECTION D
scale ½" = 1'-0" S14, S15 S17

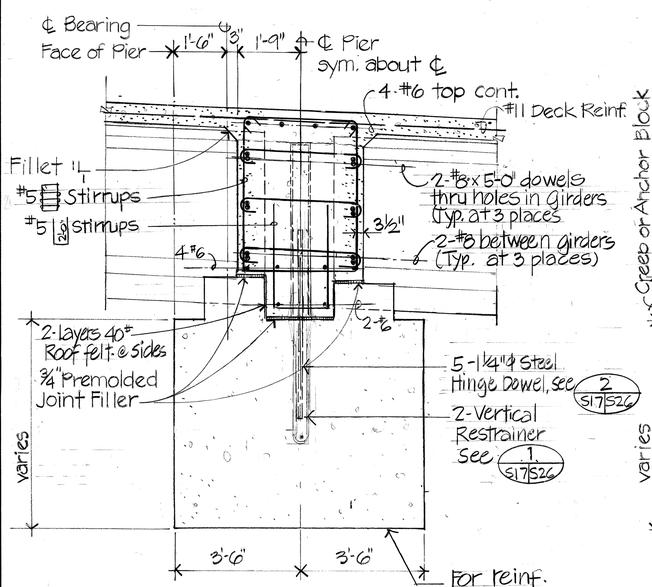


SECTION E
Scale: ½" = 1'-0" S14 S17

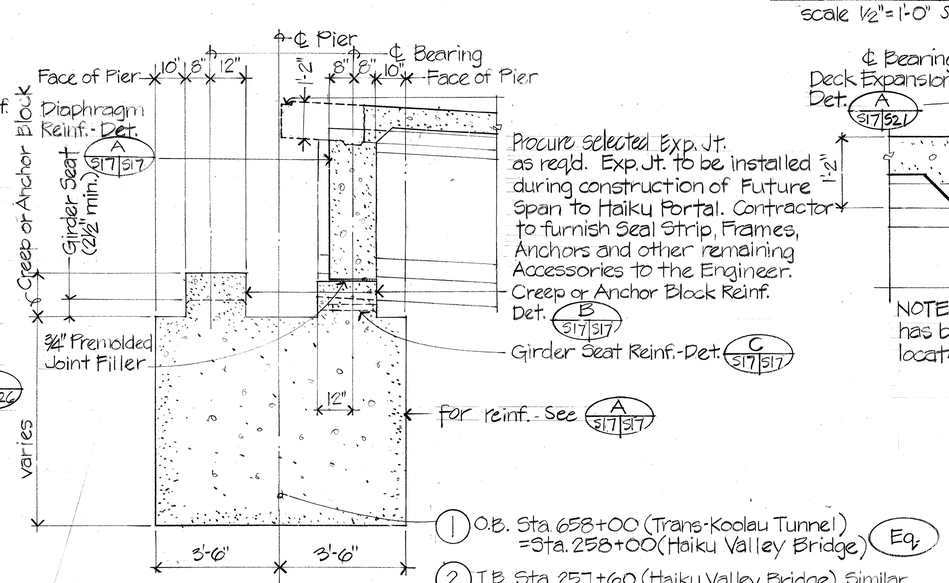


SECTION F
Scale ½" = 1'-0" S6 S17

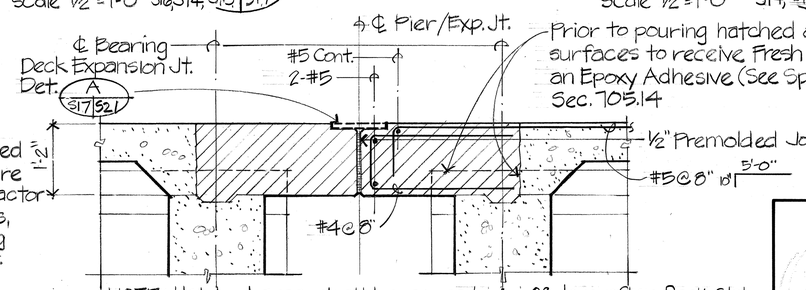


Prior to pouring hatched areas, coat all surfaces to receive Fresh Concrete with an Epoxy Adhesive (See Special Provisions Sec. 705.14

NOTE: Hatched area shall be poured min. 28 days after Deck Slab has been poured. Expansion Joint Anchor Devices shall be located and held in final positions as per Mfg. requirements.

CLOSURE POUR DETAIL G S15 S17
No Scale

1. O.B. Sta. 658+00 (Trans-Koolau Tunnel) = Sta. 258+00 (Haiku Valley Bridge) Eq.
2. I.B. Sta. 257+60 (Haiku Valley Bridge) Similar

MYRON G. OKUBO REGISTERED PROFESSIONAL ENGINEER No. 4320-S HAWAII, U.S.A.

THIS WORK WAS PREPARED BY ME OR UNDER MY SUPERVISION
Myron Okubo

| DATE | REVISION |
|---|---|
| 1/10/89 | Detail E Revised, Note Added to Detail F. |

STATE OF HAWAII
DEPARTMENT OF TRANSPORTATION
HIGHWAYS DIVISION

**PIER SECTIONS**

INTERSTATE ROUTE H-3
F.A.I. PROJECT NO. I-H3-1(52):

SCALE: AS NOTED DATE: JULY 1988
SHEET No. S17 OF S26 SHEETS

ORIGINAL PLAN | SURVEY PLOTTED BY | DRAWN BY | TRACED BY | DESIGNED BY | QUANTITIES BY | CHECKED BY | DATE | NOTE BOOK No.

AS BUILT

ADD. 51

S17

49

| FED. ROAD DIST. NO. | STATE | FED. AID PROJ. NO. | FISCAL YEAR | SHEET NO. | TOTAL SHEETS |
|---|---|---|---|---|---|
| HAWAII | HAW. | I-H3-1(52) | 1988 | 52 | 75 |

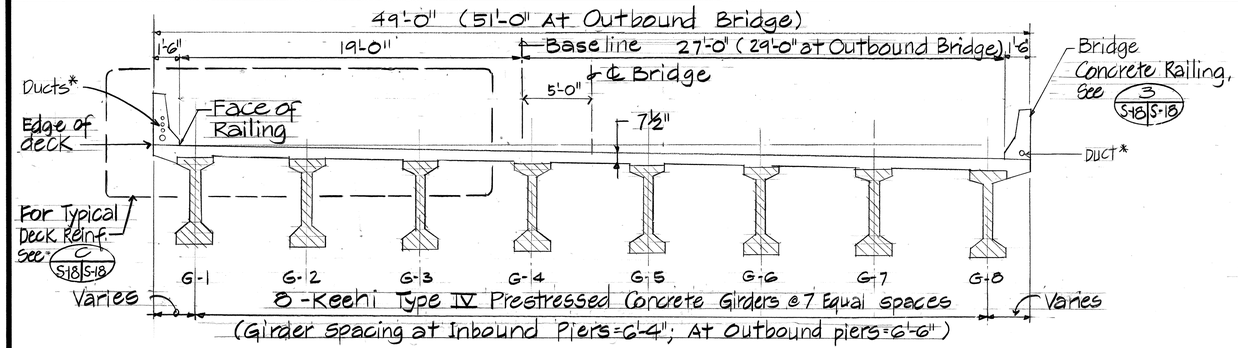


## TYPICAL BRIDGE CROSS SECTION (A S18 S18)

Scale: 1/4" = 1'-0"

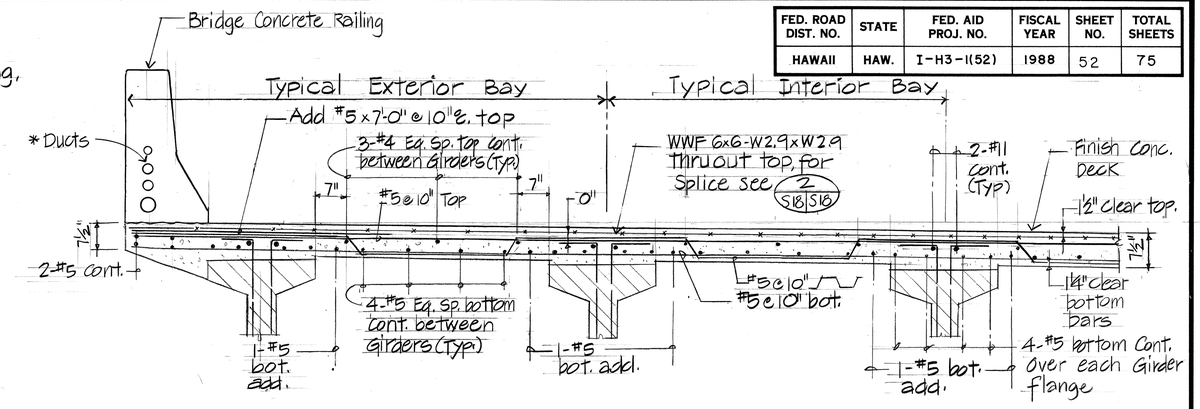


## TYPICAL DECK REINFORCING (C S18 S18)

Scale: 3/4" = 1'-0"

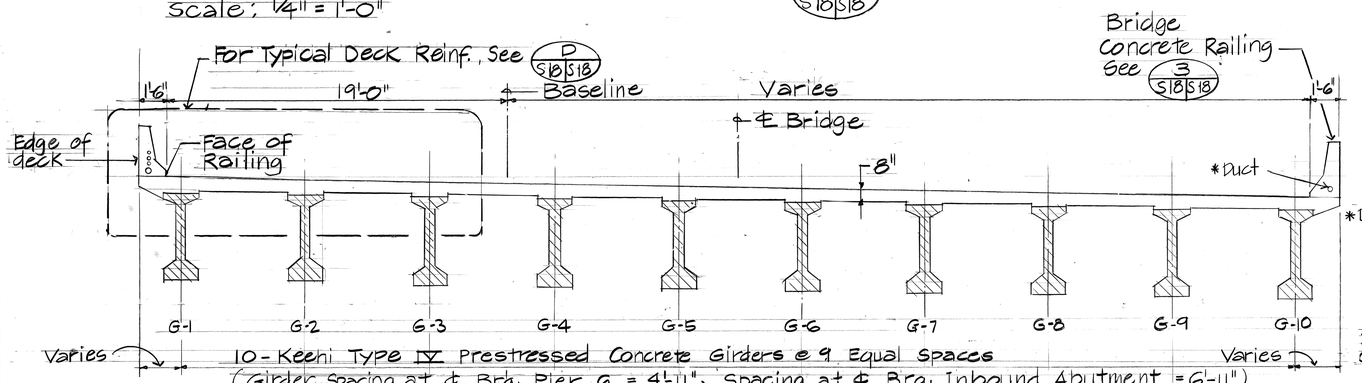


## SPAN 6 INBOUND BRIDGE CROSS-SECTION (B S18 S18)

Scale: 1/4" = 1'-0"

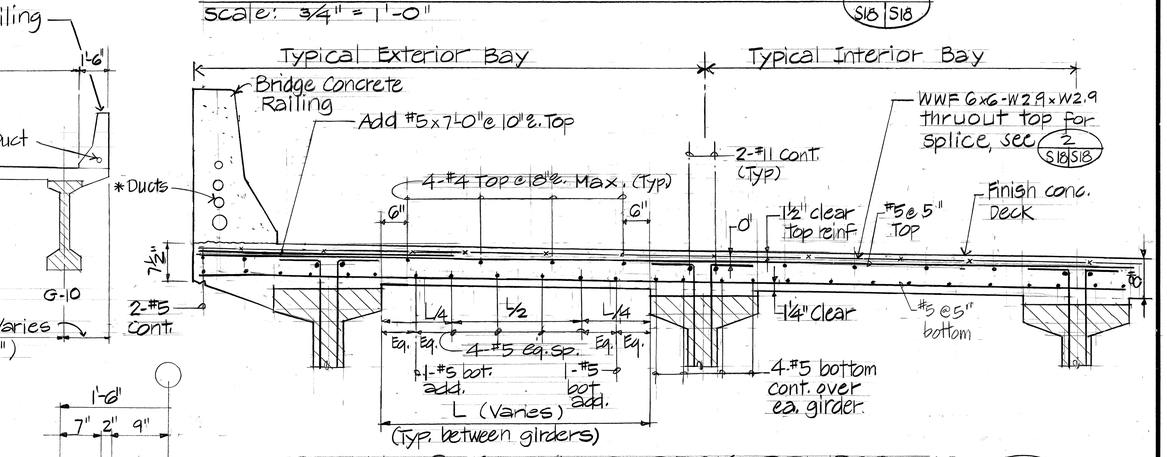


## SPAN 6 INBOUND DECK REINFORCING (D S18 S18)

Scale: 3/4" = 1'-0"

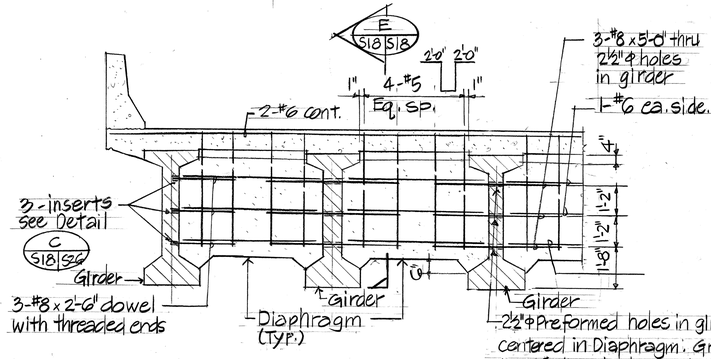


## ELEVATION - SECTION

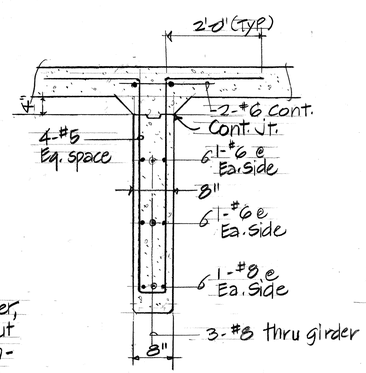


## SECTION (E S18 S18)

Scale: 3/4" = 1'-0" S5, S18 S18

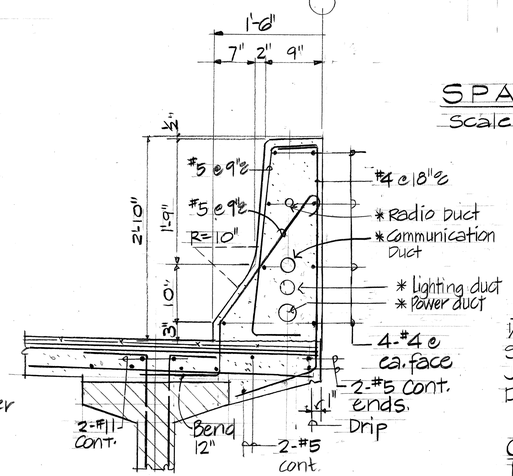


## BRIDGE CONCRETE RAILING REINF. DETAIL (3 S18 S18)

Scale: 1" = 1'-0" S26, S23, S18 S18

* For Power, Communication, Lighting & Radio Ducts See Electrical Drawings.

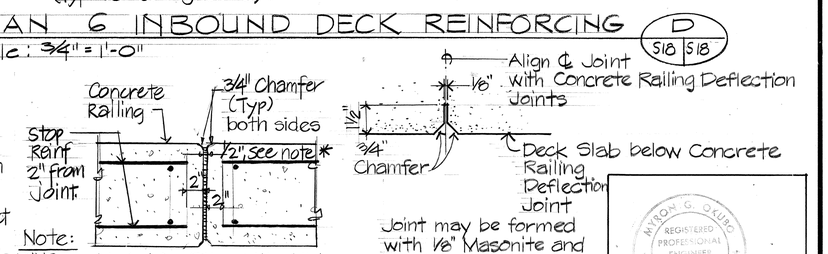


## JOINT DET. (5 S18 S18)

No Scale:

## CONCRETE RAILING DEFLECTION JOINT (4 S6 S18)

No Scale:

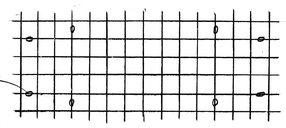


## WWF 6x6-W2.9xW2.9 SPLICE DETAIL (2 S18 S18)

No Scale:

Wire fabric to be overlapped one square adjacent and parallel wire to be welded together with MIG weld using 0.062" ϕ wire. An Alternate to MIG welding is to be use Cadweld Type splice or an approved equal.

## INTERMEDIATE DIAPHRAGM DETAIL (1 S18 S18)

Scale: 3/8" = 1'-0"

| DATE | REVISION |
|---|---|
| 1/10/89 | 3" ϕ Power Ducts Revised<br>Detail 4 Revised, Detail 5 Added |

THIS WORK WAS PREPARED BY ME OR UNDER MY SUPERVISION

STATE OF HAWAII
DEPARTMENT OF TRANSPORTATION
HIGHWAYS DIVISION

# DECK REINFORCEMENT DETAILS

INTERSTATE ROUTE H-3
F.A.I. PROJECT NO. I-H3-1(52):

SCALE: AS NOTED DATE: JULY 1988

SHEET No. S18 OF S26 SHEETS

ORIGINAL PLAN | SURVEY PLOTTED BY | DRAWN BY | TRACED BY | DESIGNED BY | NOTE BOOK | QUANTITIES BY | CHECKED BY | DATE | No.

AS BUILT

ADD. 52

| FED. ROAD DIST. NO. | STATE | FED. AID PROJ. NO. | FISCAL YEAR | SHEET NO. | TOTAL SHEETS |
|---|---|---|---|---|---|
| HAWAII | HAW. | I-H3-1(52) | 1988 | 53 | 75 |

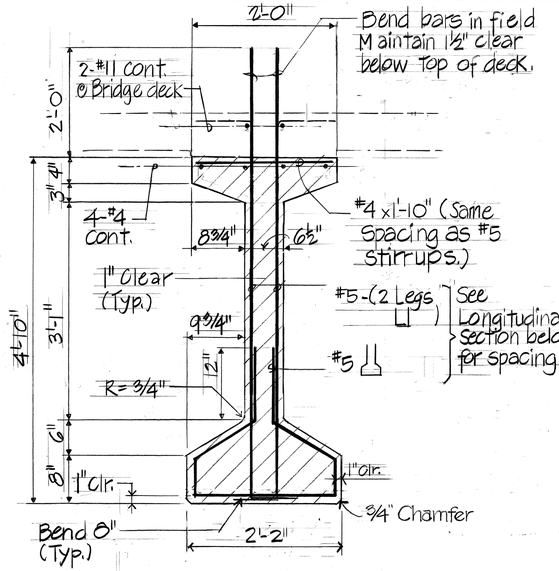


KEEHI IV GIRDER
TYPICAL GIRDER SECTION
Scale: 1" = 1'-0"

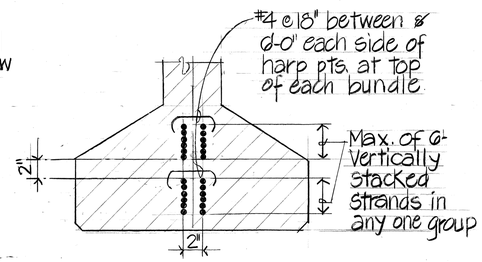


BUNDLED PRESTRESSING
REINFORCEMENT DETAIL
No scale:

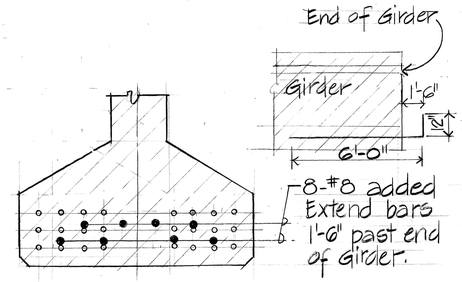


ADDED REINFORCEMENT
AT GIRDER ENDS

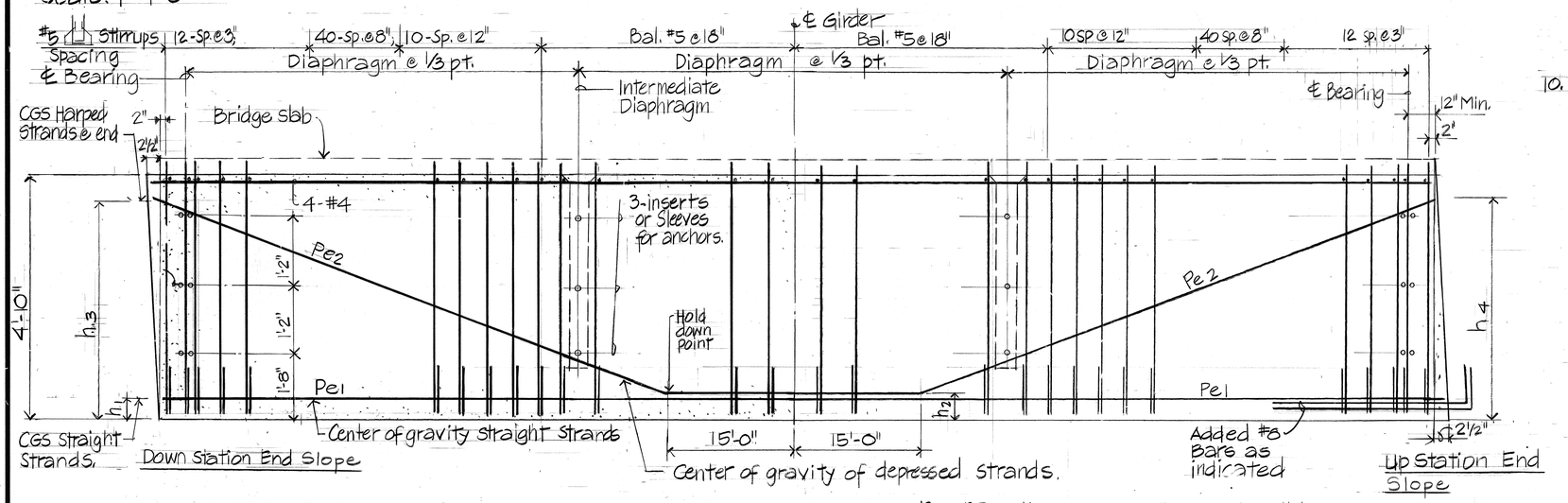


KEEHI IV GIRDER LONGITUDINAL SECTION
No Scale:

| GIRDER SPAN | Pe1 | h1 | Pe2 | h2 | h3 | h4 | ADDED REINF. |
|---|---|---|---|---|---|---|---|
| 1 IB | 627K | 3.85" | 386K | 4.81" | 44" | 44" | Future Span by Others |
| 2 IB | 627K | 3.85" | 386K | 4.81" | 44" | 49" | 8-#8 @ Up Station End |
| 3 IB | 627K | 3.85" | 386K | 4.81" | 49" | 44" | 8-#8 @ Down Station End |
| 4 IB | 627K | 3.85" | 386K | 4.81" | 44 | 49" | 8-#8 @ Up Station End |
| 5 IB | 627K | 3.85" | 386K | 4.81" | 49" | 44" | 8-#8 @ Down Station End |
| 6 IB | 627K | 3.85" | 386K | 4.81" | 44 | 44" | |
| 1 OB | 627K | 3.85" | 386K | 4.81" | 44" | 44" | |

Pe = Effective working force after all losses
Inserts and Sleeves shall be incidental to Keehi Type IV Prestressed Concrete Girders.

Girder ends to be plumb and parallel to ℄ Pier when erected and Deck Slab, Haunches and Diaphragms placed.

For embedded sole pl's. @ Girder ends, see B S19|S20

## PRESTRESSED GIRDER NOTES:

### PRETENSIONING

1. Concrete shall have a minimum ultimate 28 day compressive strength of 6000 psi. Minimum ultimate concrete compressive strength before release of strands is f'ci = 5000 psi.
2. Pretensioned strands are ½" dia. 7 wire low-relaxation steel strands (Area = 0.1531 in²) with an ultimate strength of 270 ksi, and shall conform to ASTM A416.
3. Total long term loses due to creep, shrinkage, elastic shortening and relaxation of steel = 45 ksi.
4. Strand pattern shall be selected to provide the effective working force, after all losses, indicated on the plans, and to induce no eccentric force about the girder longitudinal centerline.
5. Strands shall be released in such a manner as to minimize lateral eccentricity.
6. Contractor shall submit his proposed strand pattern and sequence of release to the Engineer for review.
7. Care shall be taken during curing, transportation and erection to avoid any lateral deflection of the girder.
8. Lifting loops or other embedded items used to lift and transport the girders shall be located as close as possible to the girder centerline of bearing. The contractor shall be responsible for the adequacy of the lifting device. The contractor shall submit details indicated the type and location of lifting devices to the Engineer for review.
9. Allowable concrete stresses:
   a. Temporary compressive stress at release = 3,000 psi.
   b. Compressive stress after losses = 2400 psi.
   c. Temporary tensile stress at release = 200 psi.
   d. Tensile stress after losses = 0
10. Mild steel reinforcing to conform to ASTM A615 · Grade 40.

Calculated camber includes the effects of the initial prestress force and weight of girder at removal from the girder prestressing bed. Negative value shown indicates a net upward deflection. The calculated camber does not account for any camber growth of the girder. The actual camber shall not exceed the calculated camber by more than 100%.

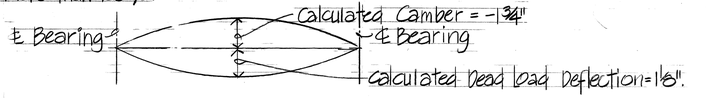


Calculated Dead Load Deflection accounts for the effects of the weight of deck slab, haunches, and diaphragms.

CAMBER DIAGRAM
No Scale:

MYRON G. OKUBO
REGISTERED PROFESSIONAL ENGINEER
No. 4320-S
HAWAII, U.S.A.

THIS WORK WAS PREPARED BY ME OR UNDER MY SUPERVISION
Myron Okubo

| DATE | REVISION |
|---|---|
| 1/10/89 | Revised Girder Longitudinal Sect. Span I.B. 1 Deleted, Note Revised |

STATE OF HAWAII
DEPARTMENT OF TRANSPORTATION
HIGHWAYS DIVISION

GIRDER SECTIONS

INTERSTATE ROUTE H-3
F.A.I. PROJECT NO. I-H3-1(52):

SCALE: AS NOTED DATE: JULY 1988
SHEET No. S19 OF S26 SHEETS

ORIGINAL PLAN | SURVEY PLOTTED BY | DRAWN BY | TRACED BY | DESIGNED BY | QUANTITIES BY | CHECKED BY | NOTE BOOK | No. | DATE

AS BUILT

ADD. 53

S19

52

| FED. ROAD DIST. NO. | STATE | FED. AID PROJ. NO. | FISCAL YEAR | SHEET NO. | TOTAL SHEETS |
|---|---|---|---|---|---|
| HAWAII | HAW. | I-H3-1(52) | 1988 | 54 | 75 |

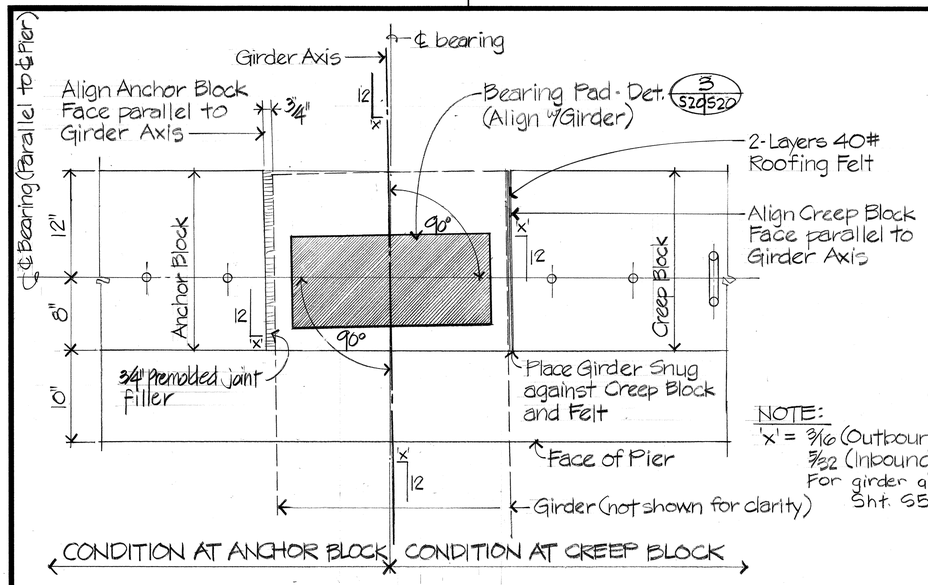


NOTE:
'x' = 3/16 (Outbound)
5/32 (Inbound Spans 1-5)
For girder alignment see Sht. S5

## GIRDER SEAT ALIGNMENT PLAN (A)

Scale 1½" = 1'-0" S8, S7, S14, S15, S16 | S20

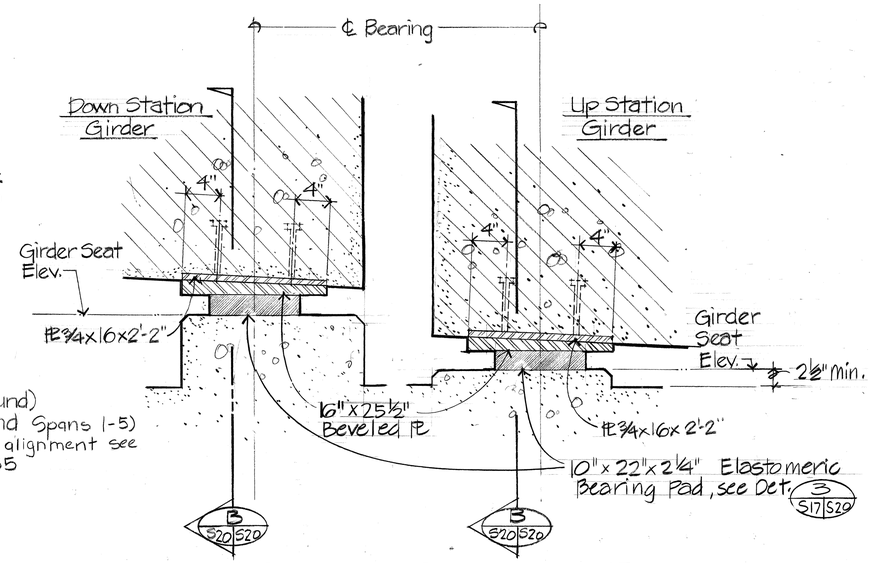


## GIRDER SEAT DETAIL AT EXPANSION JOINTS (1)

Scale: 1½" = 1'-0" Condition @ Hinge Joint Similar. S14, S17 | S20

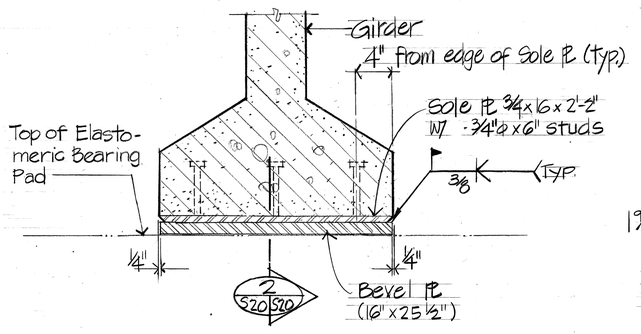


## SECTION (B)

Scale 1½" = 1'-0" S10, S19, S20 | S20

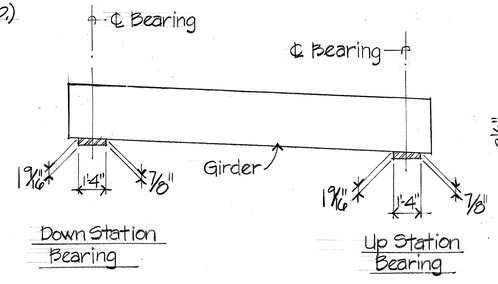


## BEVELED PL (16"x25½") (2)

N.T.S. S20 | S20

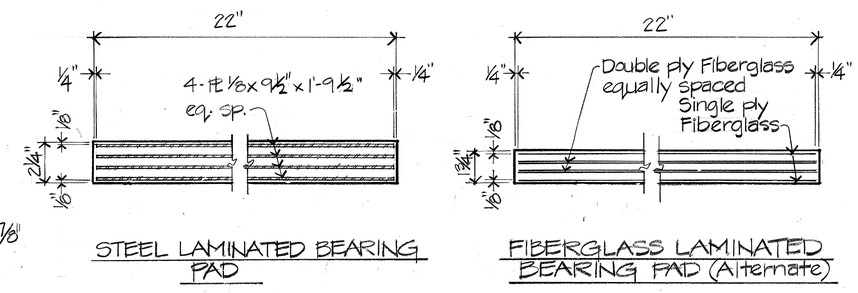


STEEL LAMINATED BEARING PAD

FIBERGLASS LAMINATED BEARING PAD (Alternate)

All bearing pads shall be 10"x22" and are incidental to concrete in Halku Valley Bridges.

## ELASTOMERIC BEARING PAD DETAIL (3)

Scale 1½" = 1'-0" Bearing Proof Load = 150 Kips S10, S17 | S20

NOTE:
All Girder Seat Elevations are based on Steel Laminated Bearing Pads. Should the Contractor elect to use the Fiberglass Laminated Bearing Pads he shall insure that the Fiberglass Laminated Bearing Pads comply with the Drawings and Specification. The Contractor shall also revise the Girder Seat Elevations to reflect the thickness of the Fiberglass Laminated Bearing Pads. All Revisions shall be approved by the Engineer.

Notes:

1. ~~Weld Beveled PL to Sole PL Prior to delivery of Girder to Job Site.~~
2. Studs welded to Sole PL with Automatically Timed Welding Equipment
3. Sole PL and Beveled PL to be hot-dipped galvanized after fabrication. Galvanized coating damaged by handling, transporting or welding shall be repaired per the specifications.
4. Sole and Beveled PLs shall be considered incidental to Keehi Type IV Prestressed concrete Girders.
5. The contractor shall minimize and dissipate the heat generated during the field welding of the 3/4" Sole plate to be bevelled bearing plate and during the field galvanizing of the weld. The contractor shall take all necessary precautions and exercise great care to avoid exposing the elastomeric bearing pad to temperatures which may damage the bearing during welding and galvanizing. Welding of the Sole PL to the Bearing PL shall be done prior to the pouring of diaphragm and deck. Temporary wooden shims (14 x 24 x 3/4 minimum thickness) shall be placed between the beveled bearing plates and the Elastomeric Bearing Pads during field welding and galvanizing. Shims shall be removed.
6. Contractor to modify thickness at edges of bevelled Plate to account for Girder End Rotation due to camber based on actual Strand Pattern used and to account for camber at time of erection.
7. Bearing Plates and Sole Plates to conform to ASTM A588.

| DATE | REVISION |
|---|---|
| 1/10/89 | Details A, B, 2 & 3 Revised, Note 1 Deleted, Note 6 & 7 Added |

AS BUILT

MYRON G. OKUBO REGISTERED PROFESSIONAL ENGINEER No. 4320-S HAWAII, U.S.A.

THIS WORK WAS PREPARED BY ME OR UNDER MY SUPERVISION

Myron Okubo

STATE OF HAWAII
DEPARTMENT OF TRANSPORTATION
HIGHWAYS DIVISION

GIRDER BEARING DETAILS

INTERSTATE ROUTE H-3
F.A.I. PROJECT NO. I-H3-1(52):

SCALE: AS NOTED DATE: JULY 1988

SHEET No. S20 OF S26 SHEETS

ORIGINAL PLAN | SURVEY PLOTTED BY | DRAWN BY | TRACED BY | DESIGNED BY | QUANTITIES BY | CHECKED BY | DATE | NOTE BOOK | No.

ADD. 54

| FED. ROAD DIST. NO. | STATE | FED. AID PROJ. NO. | FISCAL YEAR | SHEET NO. | TOTAL SHEETS |
|---|---|---|---|---|---|
| HAWAII | HAW. | I-H3-1(52) | 1988 | 55 | 75 |

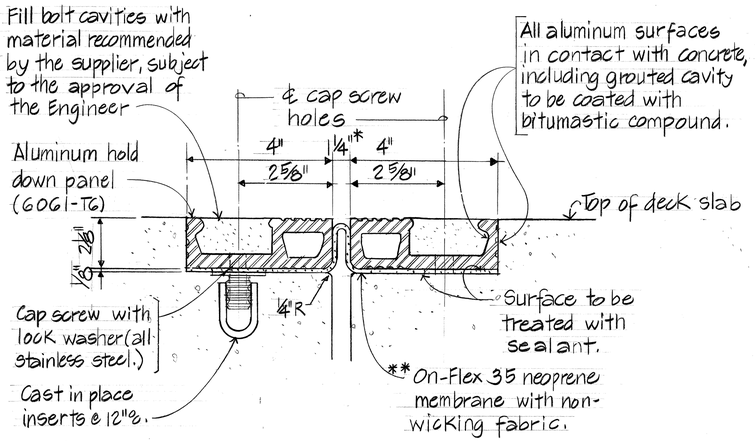


## ON-FLEX 35

Not to scale:
(Manufacturer: Structural Accessories Inc.)

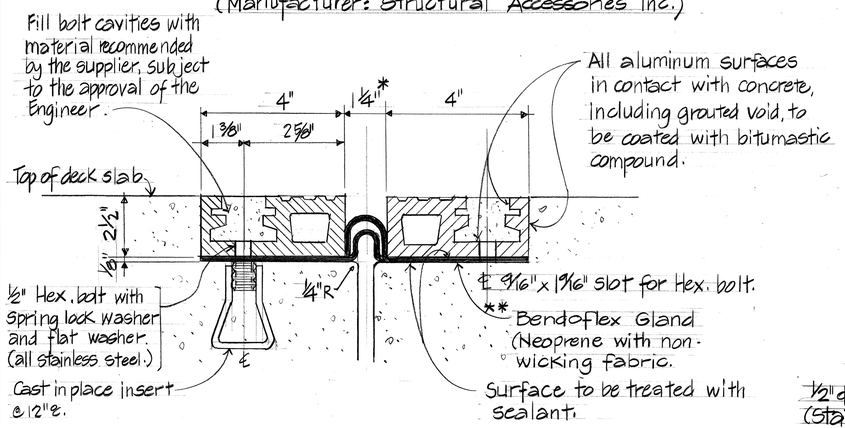


## WABO BENDOFLEX 450

Not to scale:
(Manufacturer: Watson Bowman Assoc. Inc.)

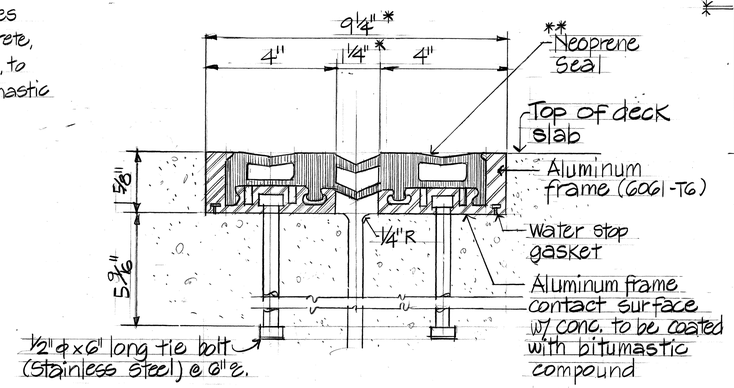


## DELASTIFLEX TYPE SM 400

Not to scale:
(Manufacturer: D.S. Brown Co.)

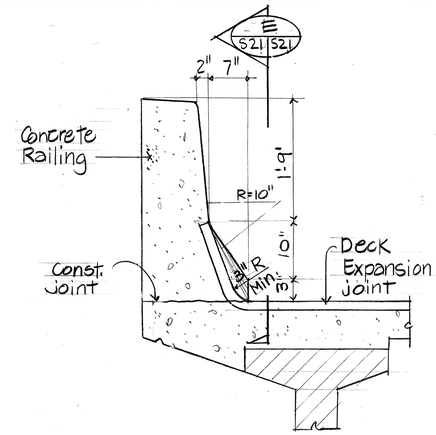


## TYPICAL DETAIL B

S21 S21

Scale: 1" = 1'-0"

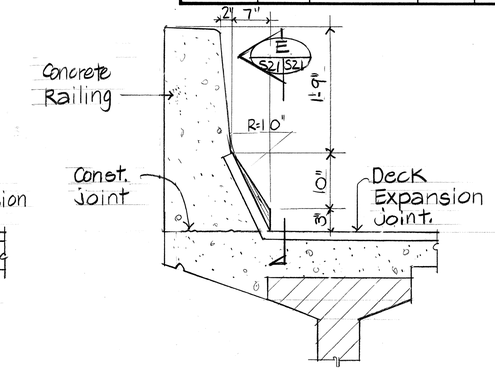


## ALTERNATE DETAIL C

S21 S21

Scale: 1" = 1'-0"

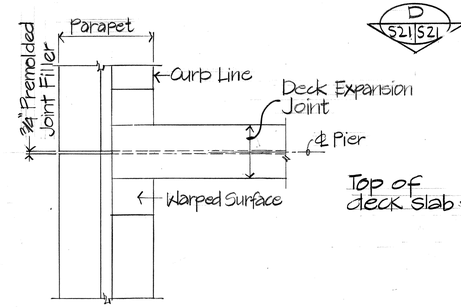


## PLAN D

S21 S21

Scale: 1" = 1'-0"

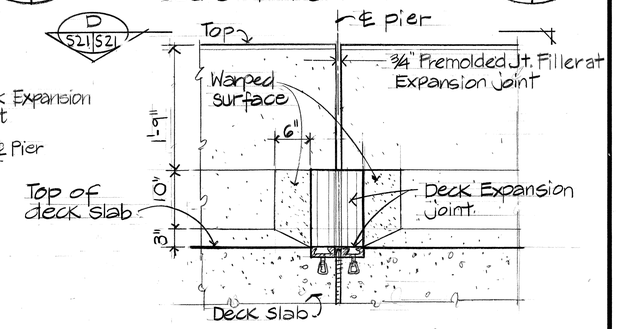


## SECTION E

S21 S21

Scale: 1" = 1'-0"

## DECK EXPANSION JOINT SECTIONS A

S6, S15, S17 S21

## DECK EXPANSION JOINT NOTES

1. Two alternate Deck Expansion Joint Systems are shown. Contractor has the option of selecting any one of the systems. The contractor shall submit detailed shop drawings of the selected joint to the Engineer for approval.
2. The contractor also has the option of using an alternate Expansion Joint System provided it complies with the plans and specifications.
3. For closure pour details, see sheet S-15.

* Installation width at 75° F.

** Seal, Gland or membrane shall be continuous across the full width of the Structure.

| DATE | REVISION |
|---|---|
| 1/10/89 | Details D & E Revised |

AS BUILT

MYRON G. OKUBO
REGISTERED PROFESSIONAL ENGINEER
No. 4320-S
HAWAII, U.S.A.

THIS WORK WAS PREPARED BY ME OR UNDER MY SUPERVISION

Myron Okubo

STATE OF HAWAII
DEPARTMENT OF TRANSPORTATION
HIGHWAYS DIVISION

**DECK EXPANSION JOINT DETAILS**

INTERSTATE ROUTE H-3
F.A.I. PROJECT NO. I-H3-1 (52):

SCALE: AS NOTED DATE: JULY 1988

SHEET No. S21 OF S26 SHEETS

ORIGINAL PLAN | SURVEY PLOTTED BY | DRAWN BY | TRACED BY | DESIGNED BY | QUANTITIES BY | CHECKED BY | NOTE BOOK | No. | DATE

ADD. 55

S21

52

| FED. ROAD DIST. NO. | STATE | FED. AID PROJ. NO. | FISCAL YEAR | SHEET NO. | TOTAL SHEETS |
|---|---|---|---|---|---|
| HAWAII | HAW. | I-H3-1(52) | 1988 | 56 | 75 |

Note:
Bridge deck reinf. not shown for clarity.

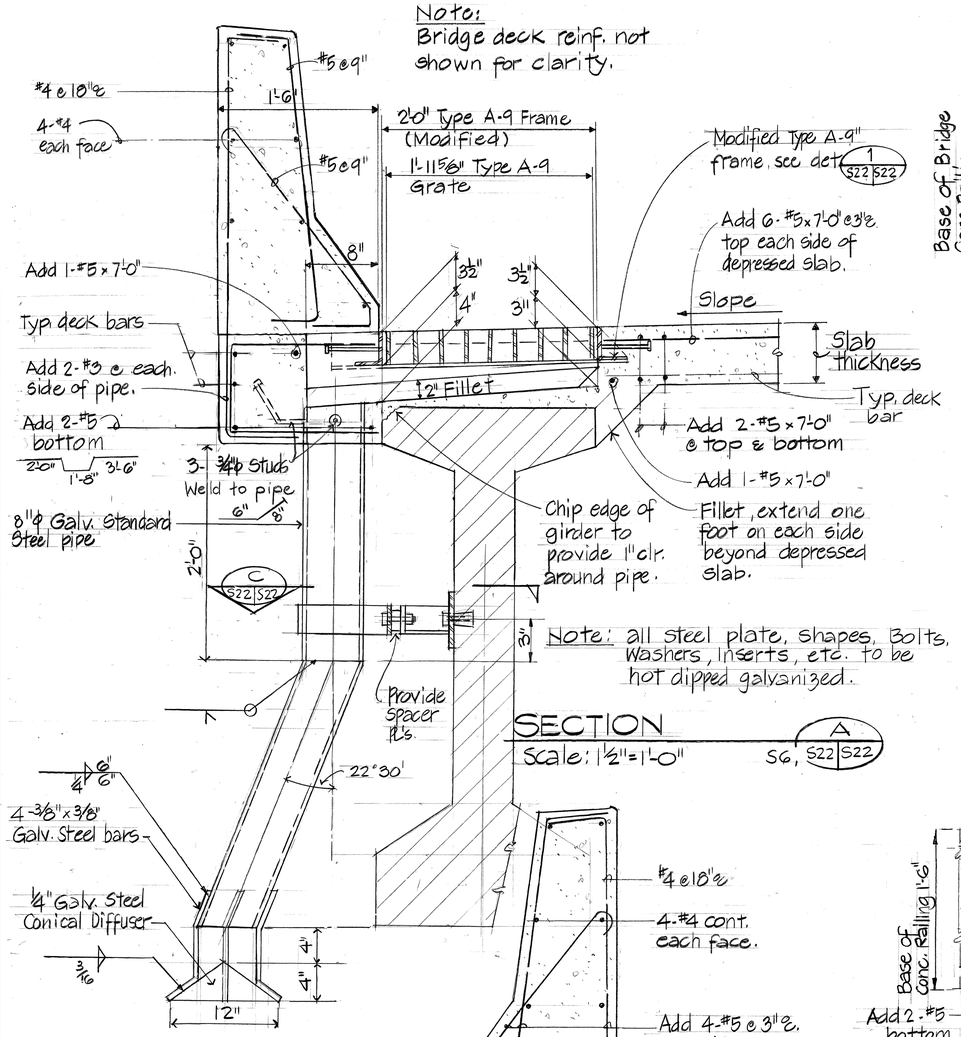


SECTION A
Scale: 1 1/2" = 1'-0"
SG, A S22 S22

SECTION B
Scale: 1 1/2" = 1'-0"
B S22 S22

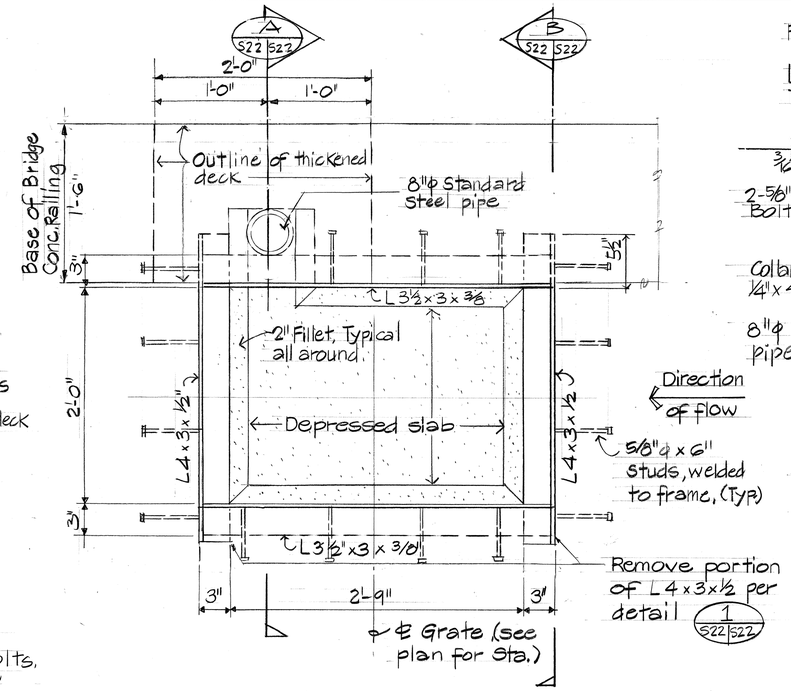


PLAN
Scale: 1 1/2" = 1'-0"

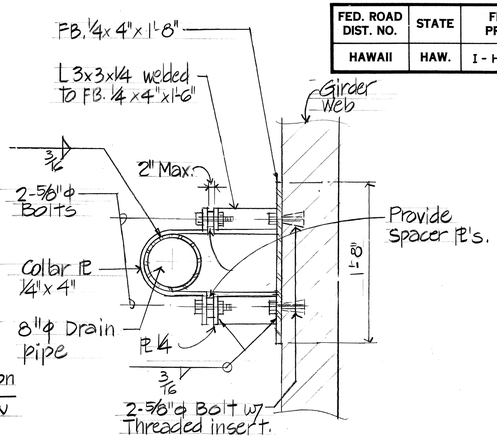


DRAIN PIPE STRAP
Scale: 1 1/2" = 1'-0"
C S22 S22

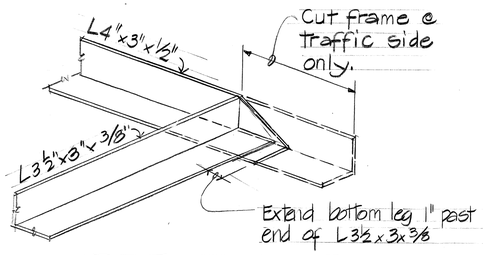


DETAIL 1
No scale
S22 S22

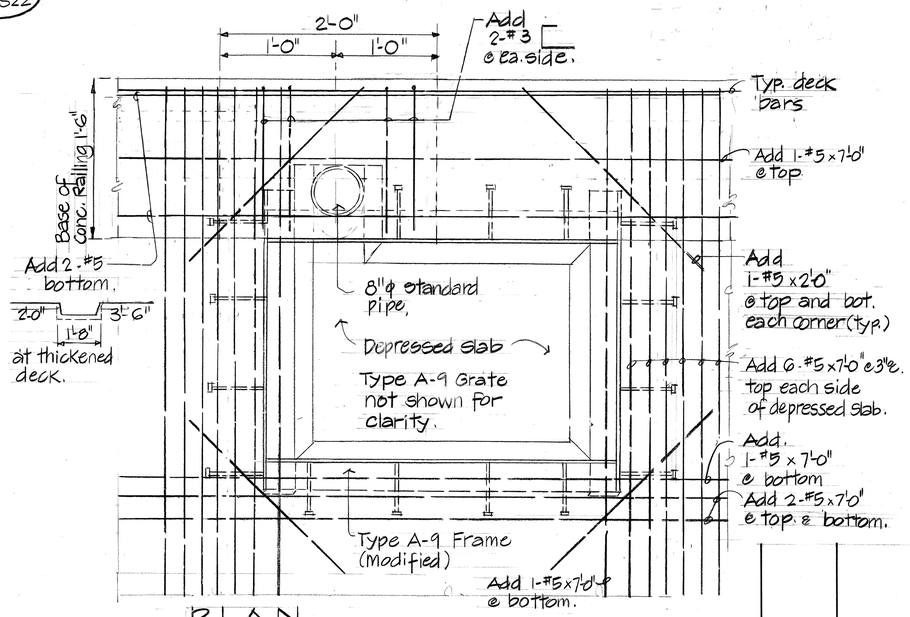


PLAN
DECK DRAIN REINF.
Scale: 1 1/2" = 1'-0"
2 S22 S22

Notes:

1. For other details of frame, see Standard Plan H-09
2. Type A-9 Standard Grate, see Standard Plan H-09.
3. Hot dip galvanized all steel after fabrication.
4. Type A-9 Grate modified Type A-9 Frame and diffuser assembly shall be incidental to concrete in Haiku Valley Bridge.

MYRON G. OKURO
REGISTERED PROFESSIONAL ENGINEER
No. 4320-S
HAWAII, U.S.A.

THIS WORK WAS PREPARED BY ME OR UNDER MY SUPERVISION
Myron Okuro

STATE OF HAWAII
DEPARTMENT OF TRANSPORTATION
HIGHWAYS DIVISION

DECK DRAIN AND MISC. DETAILS

INTERSTATE ROUTE H-3
F.A.I. PROJECT NO. I-H3-1(52)

SCALE: AS NOTED DATE: JULY 1988

SHEET No. S22 OF S26 SHEETS

| DATE | REVISION |
|---|---|
| | |

AS BUILT

ORIGINAL PLAN
SURVEY PLOTTED BY
DRAWN BY
TRACED BY
DESIGNED BY
NOTE BOOK
QUANTITIES BY
CHECKED BY
DATE
No.

| FED. ROAD DIST. NO. | STATE | FED. AID PROJ. NO. | FISCAL YEAR | SHEET NO. | TOTAL SHEETS |
|---|---|---|---|---|---|
| HAWAII | HAW. | I-H3-1(52) | 1988 | 57 | 75 |

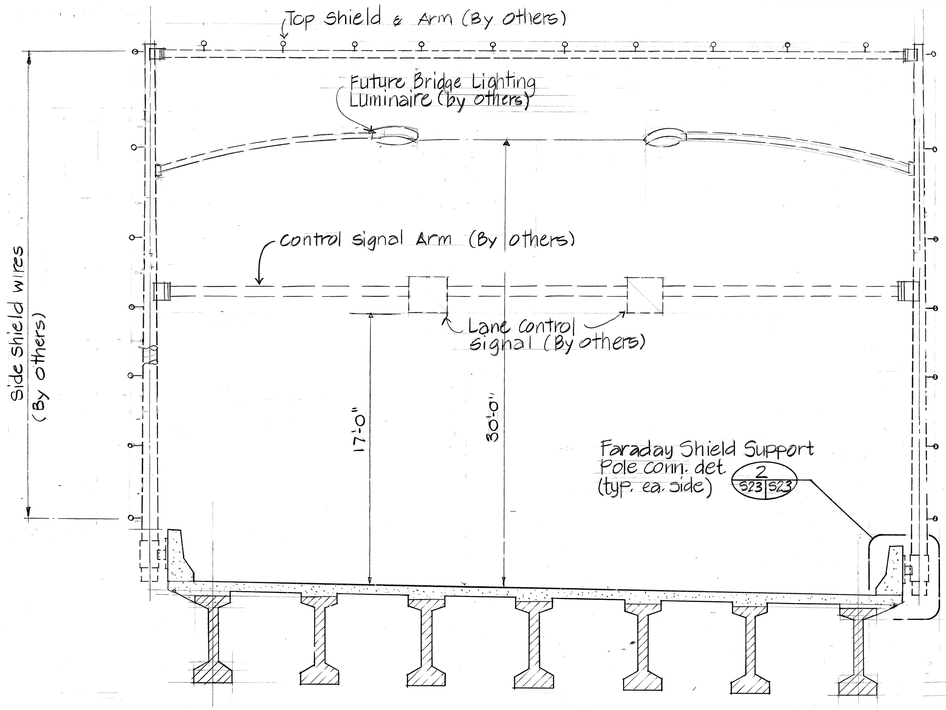


## FARADAY SHIELD SUPPORT DETAIL (1 S23 S23)

Scale: 1/4" = 1'-0"

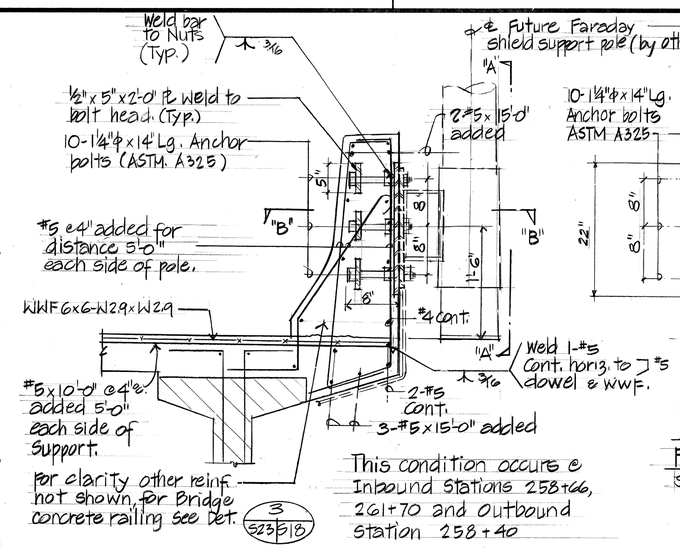


## FARADAY SHIELD SUPPORT POLE CONNECTION DETAIL (4 S23 S23)

Scale: 1" = 1'-0"

MWG

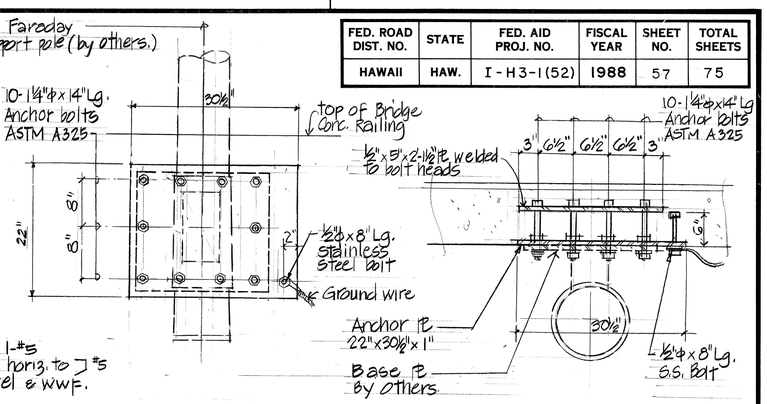


## SECTION "A-A" FACE VIEW

SCALE: 1" = 1'-0"

## SECTION "B-B"

Scale: 1" = 1'-0"

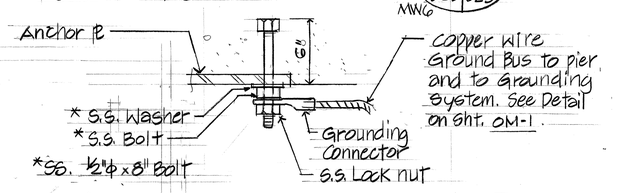


## GROUND WIRE CONN. DETAIL (5 S23 S23)

N.T.S.

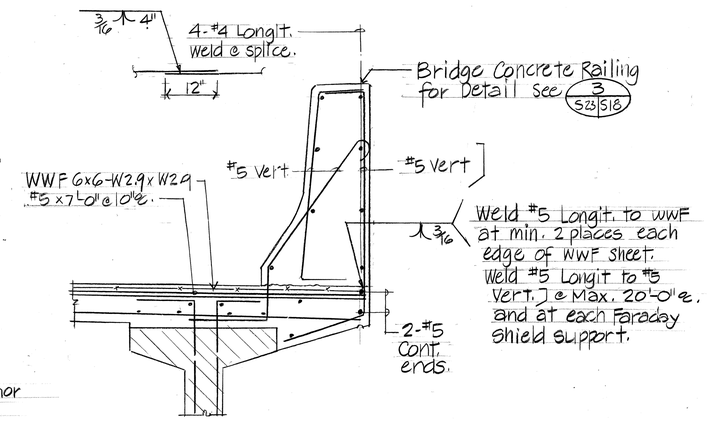


## BRIDGE GROUNDING DETAIL (3 S23 S23)

Scale: 1" = 1'-0"

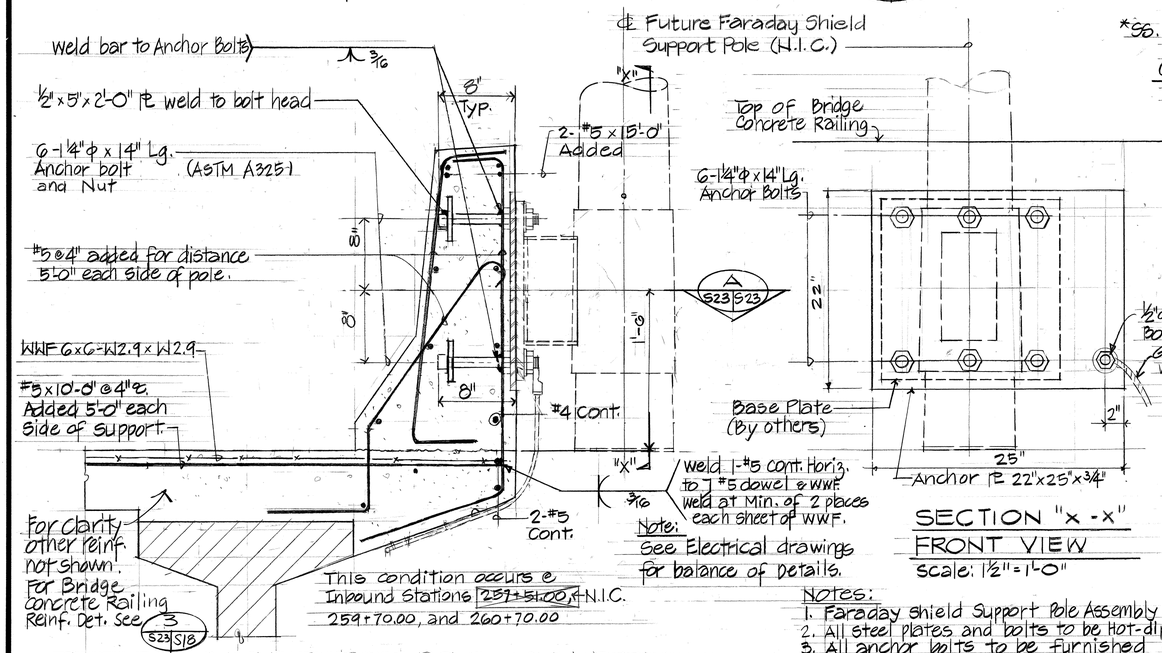


## FARADAY SHIELD SUPPORT POLE CONN. DETAIL (2 S23 S23)

Scale: 1 1/2" = 1'-0"

MWG

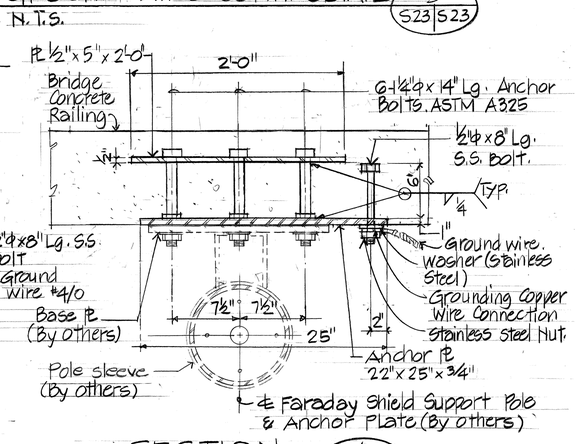


## SECTION "X-X" FRONT VIEW

Scale: 1 1/2" = 1'-0"

## SECTION A (S23 S23)

Scale: 1 1/2" = 1'-0"

Notes:

1. Faraday shield Support Pole Assembly shall be considered incidental to Bridge Conc. Railing.
2. All steel plates and bolts to be Hot-dipped Galvanized after fabrication.
3. All anchor bolts to be furnished with proper lengths and threads excluded from the shear plane.
4. All Bolts for Supports shown on this Sheet to be furnished with proper Washers and Nuts.

| DATE | REVISION |
|---|---|
| 5/29/90 | Revised Detail 4 |
| 1/10/89 | Details 1, 2 & 4 Revised, Note 4 Added |

AS BUILT

REGISTERED PROFESSIONAL ENGINEER No. 4320-S HAWAII, U.S.A. MYRON G. OKUBO

THIS WORK WAS PREPARED BY ME OR UNDER MY SUPERVISION

Myron Okubo

STATE OF HAWAII
DEPARTMENT OF TRANSPORTATION
HIGHWAYS DIVISION

**FARADAY SHIELD CONN. DETAIL**

INTERSTATE ROUTE H-3
F.A.I. PROJECT NO. I-H3-1(52):

SCALE: AS NOTED — DATE: JULY 1988

SHEET NO. S23 OF S26 SHEETS

ORIGINAL PLAN — SURVEY PLOTTED BY / DRAWN BY / TRACED BY / DESIGNED BY / QUANTITIES BY / CHECKED BY — DATE — NOTE BOOK — No.

ADD. 57 R.

| FED. ROAD DIST. NO. | STATE | FED. AID PROJ. NO. | FISCAL YEAR | SHEET NO. | TOTAL SHEETS |
|---|---|---|---|---|---|
| HAWAII | HAW. | I-H3-1(52) | 1988 | 58 | 75 |

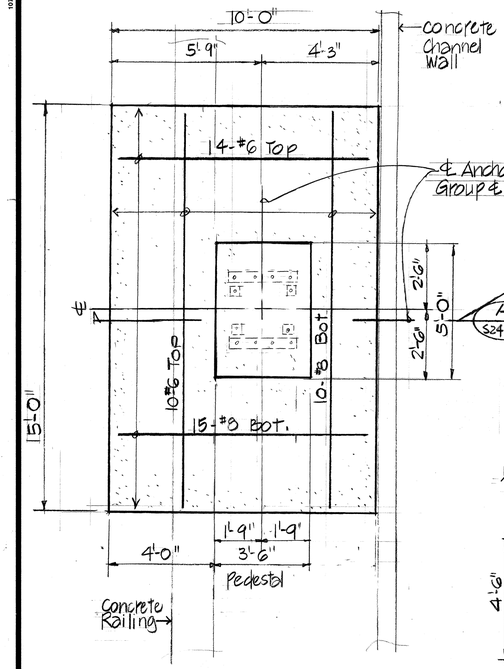


PLAN
Scale: 3/8" = 1'-0"

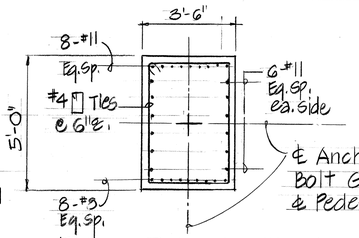


PEDESTAL SECTION B S24|S24
Scale: 3/8" = 1'-0"

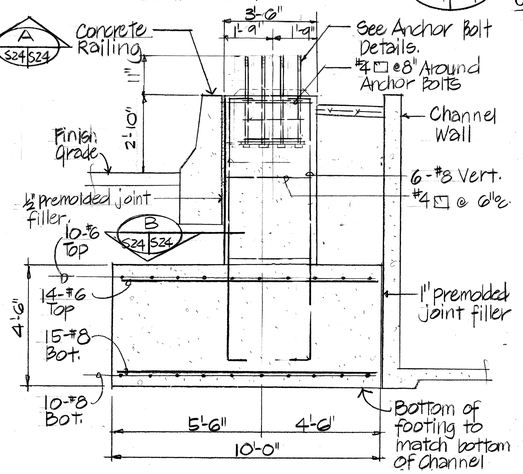


SECTION A S24|S24
Scale: 3/8" = 1'-0"

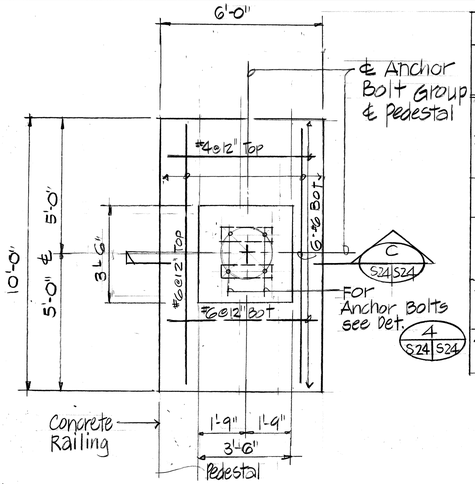


PLAN
Scale: 3/8" = 1'-0"

| ANCHOR BOLT SCHEDULE | | | | |
|---|---|---|---|---|
| Location Station | Anchor Bolt Size | D | E1 | E2 |
| | | | | |
| 261+40 OB Center | 2½" | | 4 S24\|S24 | |
| 261+40 OB Right | 2½" | | | |
| Inbound Abut. 2 Locations 262+58.75 I.B. | 2¼" | 3'-3" | 3'-0" | 2'-0" |
| 262+42 O.B. Right | 2¼" | 3'-3" | 3'-0" | 2'-0" |
| 263+28.5 OB Right | 2¼" | 3'-9" | 3'-6" | 2'-0" |

Anchor bolts to be set with Template.

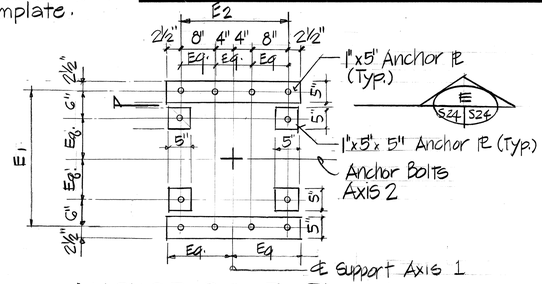


ANCHOR BOLT - PLAN
Scale: 3/4" = 1'-0"

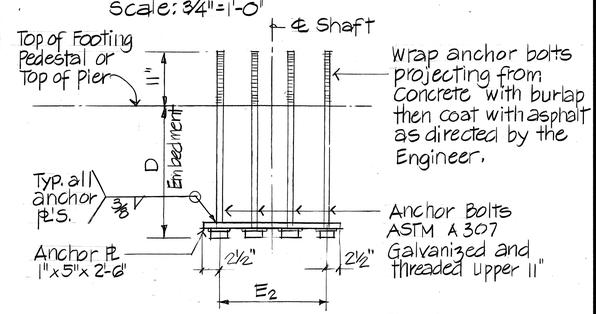


SECTION E S24|S24
Scale: 3/4" = 1'-0"

ANCHOR BOLT DETAILS 3 H8, S24|S24
Scale: 3/4" = 1'-0"

Anchor Bolts, Plates, Burlap and Asphalt Coating shall be considered incidental to the various Foundations.

For placement of Electric Power, Communication and Signal conduits see Electrical Drawings.

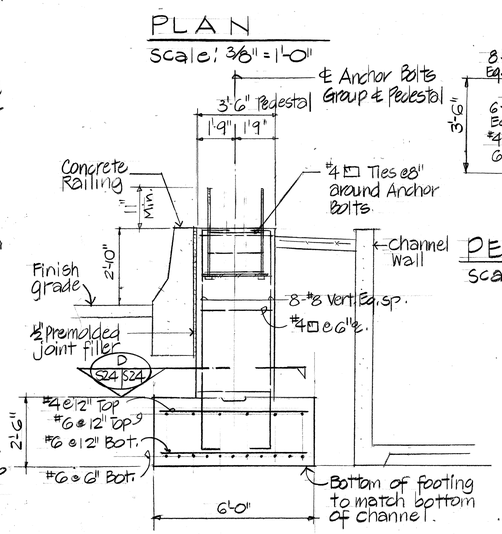


SECTION C S24|S24
Scale: 3/8" = 1'-0"

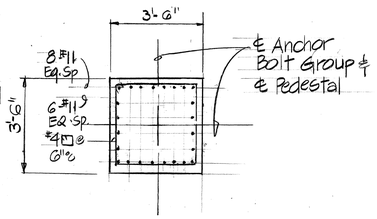


PEDESTAL SECTION D S24|S24
Scale: 3/8" = 1'-0"

Deleted by CCO #32

~~FOUNDATION FOR HIGHWAY SIGN @ STA. 263+28.5 O.B. RIGHT~~ 1 S24|S24

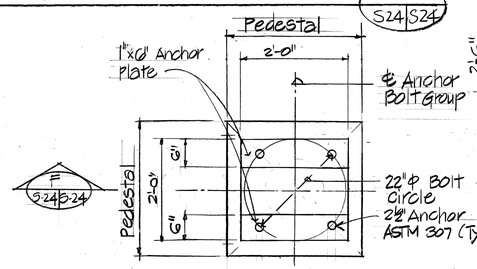


ANCHOR BOLT - PLAN 4 H8, S24|S24
Scale: 3/4" = 1'-0"

Deleted by CCO #32

~~FOUNDATION FOR FARADAY POST @ STA. 261+40 O.B. RIGHT~~ 2 S24|S24

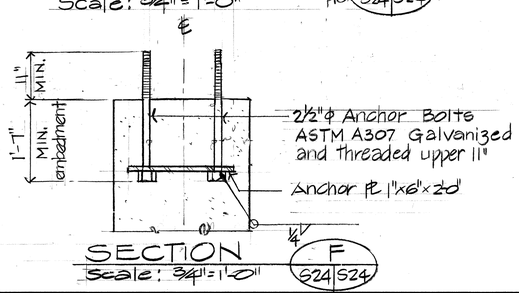


SECTION F S24|S24
Scale: 3/4" = 1'-0"

| DATE | REVISION |
|---|---|
| 1/10/89 | Detail 4 Revised Details 3A, F & Schedule Revised |

AS BUILT

MYRON G. OKUBO REGISTERED PROFESSIONAL ENGINEER No. 4320-S HAWAII, U.S.A.

THIS WORK WAS PREPARED BY ME OR UNDER MY SUPERVISION

STATE OF HAWAII
DEPARTMENT OF TRANSPORTATION
HIGHWAYS DIVISION

SIGN SUPPORT DETAILS

INTERSTATE ROUTE H-3
F.A.I. PROJECT NO. I-H3-1(52)

SCALE: AS NOTED DATE: JULY 1988

SHEET No. S24 OF S26 SHEETS

ORIGINAL PLAN | SURVEY PLOTTED BY | DRAWN BY | TRACED BY | DESIGNED BY | QUANTITIES BY | CHECKED BY | DATE | NOTE BOOK | No.

ADD. 58

| FED. ROAD DIST. NO. | STATE | FED. AID PROJ. NO. | FISCAL YEAR | SHEET NO. | TOTAL SHEETS |
|---|---|---|---|---|---|
| HAWAII | HAW. | I-H3-1(52) | 1988 | 59 | 75 |

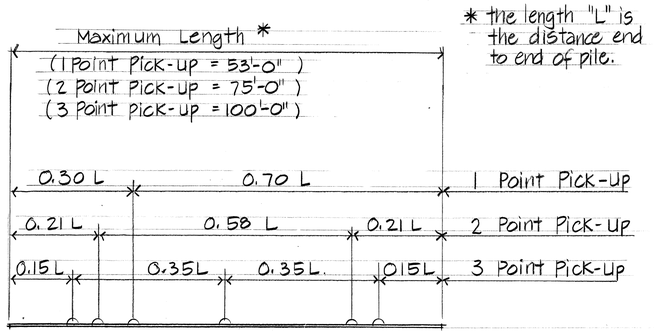


## PILE PICK-UP POINTS (3 / S25 | S25)

No scale.

Remove and Patch Pile Lifting Loops prior to delivery to Jobsite. Piles with Driving Shoes shall have a Grounding Cable attached to the Shoes during handling. Piles shall be handled at the Jobsite with Cables adequately grounded.

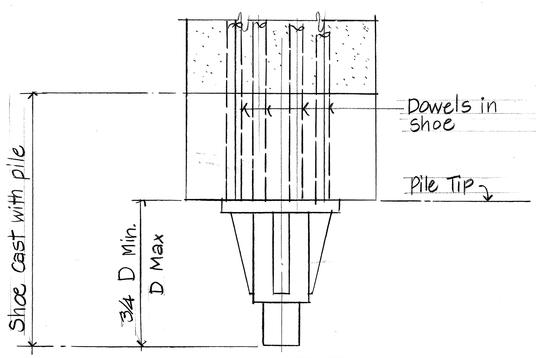


ELEVATION

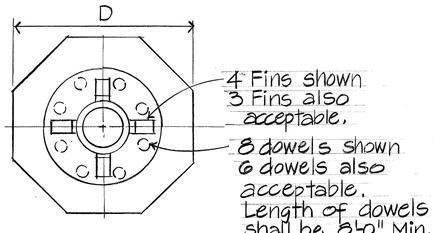


PLAN

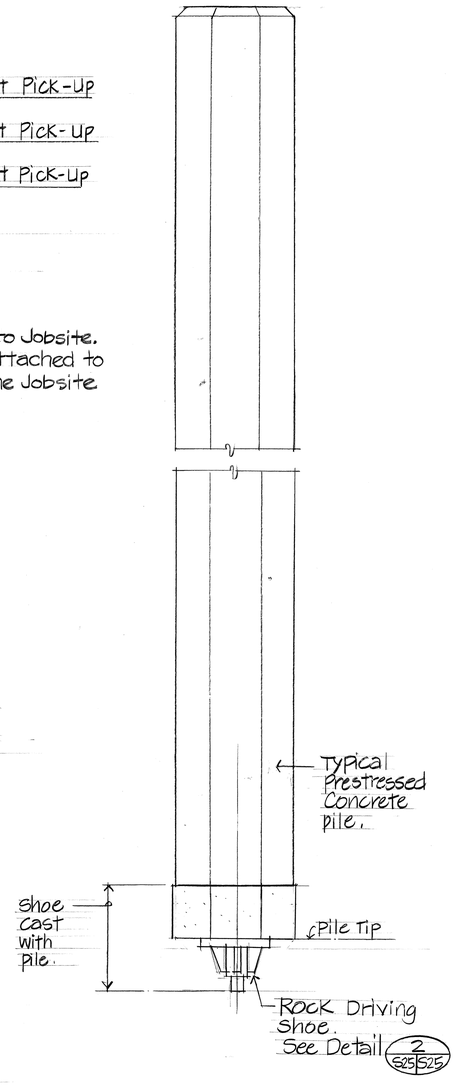


Note: Pile shoes shall be similar or equal to "Herkules" Rock shoe.

## ROCK DRIVING SHOE DETAIL (2 / S25 | S25)

No scale.

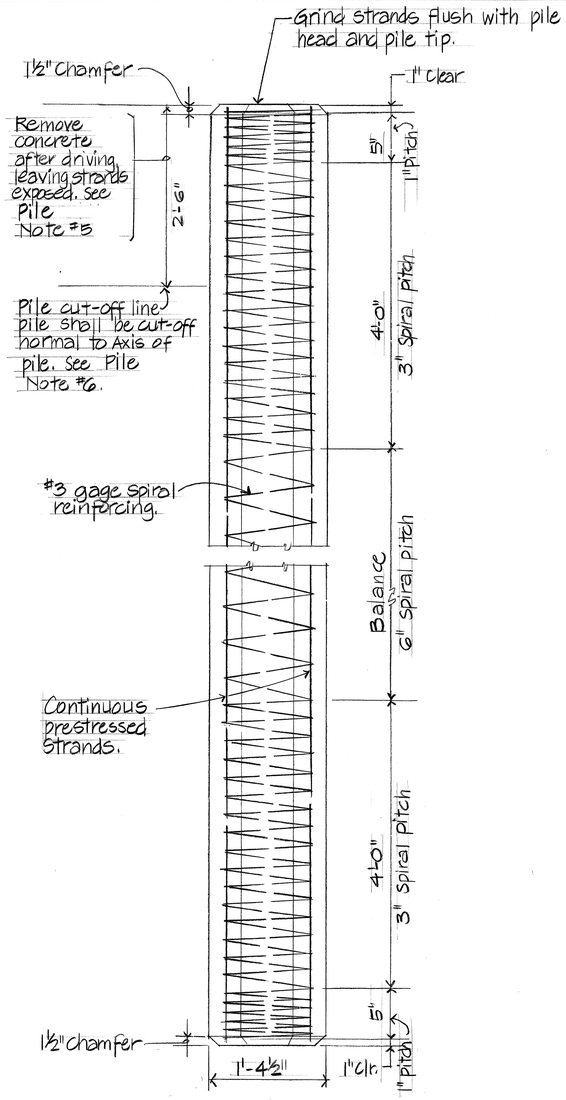


ELEVATION

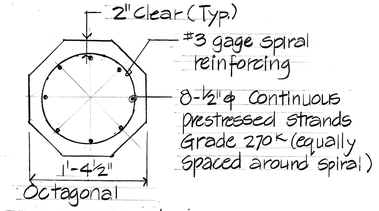


SECTION

## TYPICAL PRESTRESSED CONCRETE PILE DETAIL (1 / S25 | S25)

No scale.

## PILE NOTES

1. Concrete strengths:
   a. Typical pile: 28 day compressive strength f'c = 6000 psi.
   b. Pile build-up with driving: 28 day compressive strength f'c = 6,000 psi.
   c. Pile build-up without driving: Identical 28 days f'c as footing or pile cap.
2. Reinforcing steel shall conform to the following ASTM Specifications:
   a. Bar reinforcement: ASTM A615 Grade 40.
   b. Spiral reinforcement: ASTM A82.
   c. Prestressing strand: ASTM A416 Grade 270.
3. The minimum working force in the prestressing steel shall be 190 kips.
4. Piles accepted by the Engineer shall be of sound concrete. Damaged piles shall be replaced or repaired by the Contractor at his expense as directed by the Engineer.
5. Work of cutting off prestressed concrete piles or concrete pile build-ups shall be performed in such a manner as to avoid spalling or damaging the pile below cut-off. Damaged portions shall be removed and pile cut-off elevation lowered as required by the Engineer.
6. Top of pile at cut-off line shall be prepared as required for construction joints in Section 503 of the Standard Specifications.
7. Pile splice shall not be permitted.
8. Build-ups may be driven after the concrete attains a compressive strength of 4000 psi., but not earlier than 7 days after the concrete is poured.
9. Pile with driving shoe shall be required for all piles at Outbound Abutment. Pile shoe shall be considered incidental to Prestressed Concrete Piles, furnished.
10. Pile Load Tests to be performed at the locations indicated. Test Load to be a minimum of two times the Design Load.
11. Pile handling procedures shall be reviewed and approved by the Engineer for Piles within the boundaries of the Omega Station.

WYNN G. OKUBO REGISTERED PROFESSIONAL ENGINEER No. 4320-S HAWAII, U.S.A.

THIS WORK WAS PREPARED BY ME OR UNDER MY SUPERVISION

Wynn Okubo

| DATE | REVISION |
|---|---|
| 1/10/89 | Note 9 Revised, Note 11 Added, Pile Pickup Notes Added |

STATE OF HAWAII
DEPARTMENT OF TRANSPORTATION
HIGHWAYS DIVISION

**PRESTRESSED CONCRETE PILE DETAILS**

INTERSTATE ROUTE H-3
F.A.I. PROJECT NO. I-H3-1(52):

SCALE: AS NOTED DATE: JULY 1988

SHEET No. S25 OF S26 SHEETS

ORIGINAL PLAN | NOTE BOOK No. | SURVEY PLOTTED BY | DRAWN BY | TRACED BY | DESIGNED BY | QUANTITIES BY | CHECKED BY | DATE

AS BUILT

ADD. 59

S25

56

| FED. ROAD DIST. NO. | STATE | FED. AID PROJ. NO. | FISCAL YEAR | SHEET NO. | TOTAL SHEETS |
|---|---|---|---|---|---|
| HAWAII | HAW. | I-H3-1(52) | 1988 | 60 | 75 |

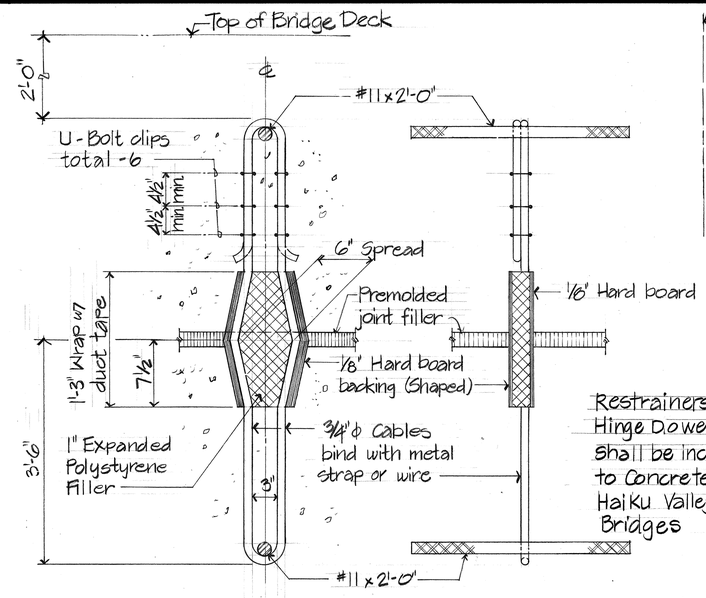


ELEVATION SECTION

## VERTICAL RESTRAINER TYPICAL DETAIL (1)

S7, S8, S14 | S26

Not to scale

Restrainers and Hinge Dowels shall be incidental to Concrete in Haiku Valley Bridges

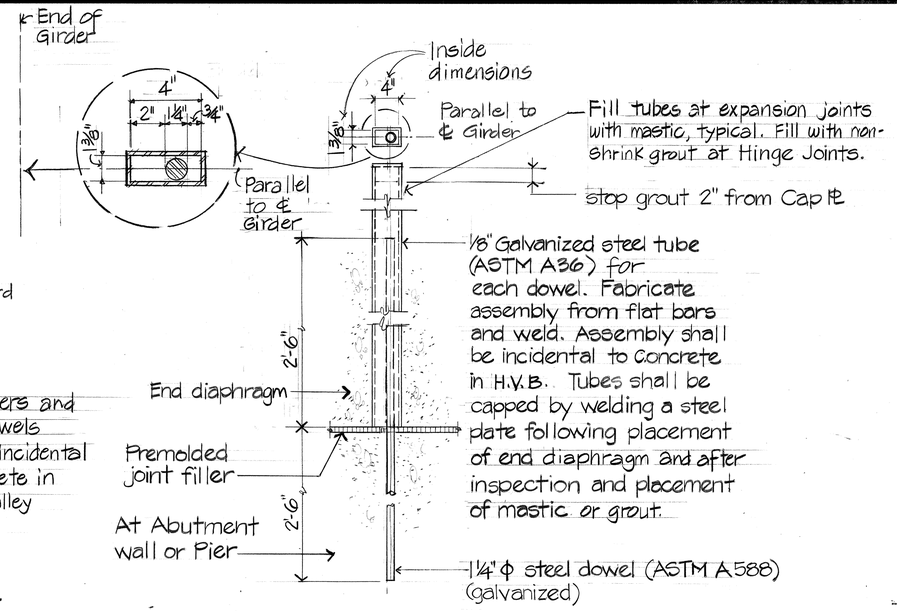


## HINGE DOWEL DETAIL (2)

S7, S8, S14, S17 | S26

Not to scale

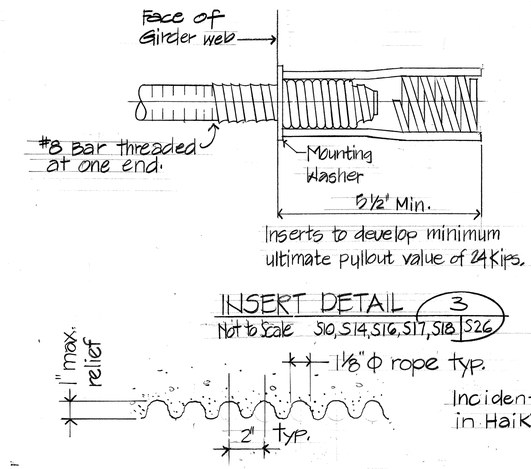


Inserts to develop minimum ultimate pullout value of 24 Kips.

## INSERT DETAIL (3)

S10, S14, S16, S17, S18 | S26

Not to Scale

Incidental to Concrete in Haiku Valley Bridges

## FRACTURED ROPE FINISH DET. (4)

S10 | S26

Not to scale

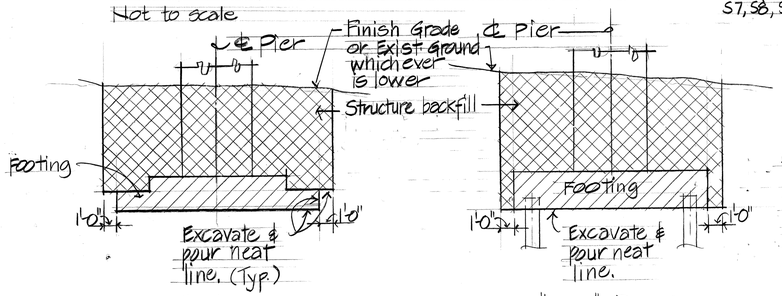


TYPE "F" FOOTING TYPE "PF" FOOTING

## STRUCTURE EXCAVATION LIMITS (5)

S4, S3 | S26

Not to scale:

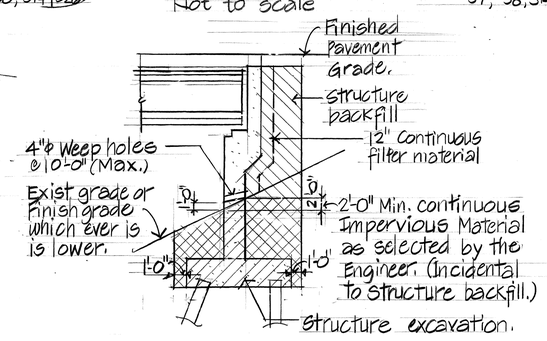


## EXCAVATION/BACKFILL PAY LINE (6)

S4, S3 | S26

Not to scale:

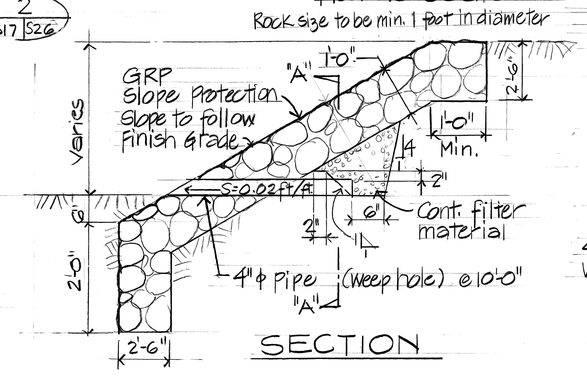


SECTION

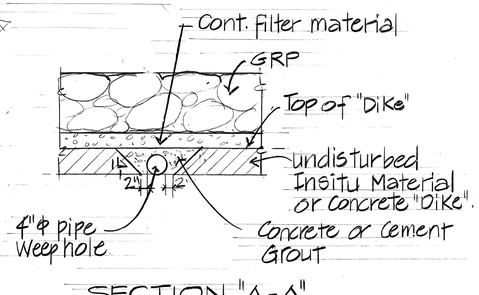


SECTION "A-A"

## GRP SLOPE PROTECTION AND WEEPHOLE DET. (7)

S4, S3 | S26

Not to scale:

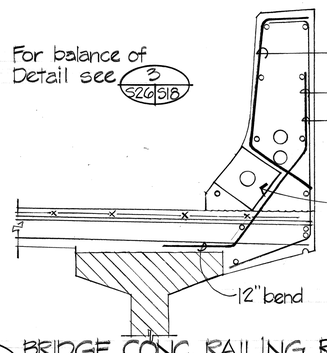


## BRIDGE CONC. RAILING REINF. DET. (8)

S26 | S26

Scale: 1" = 1'-0"

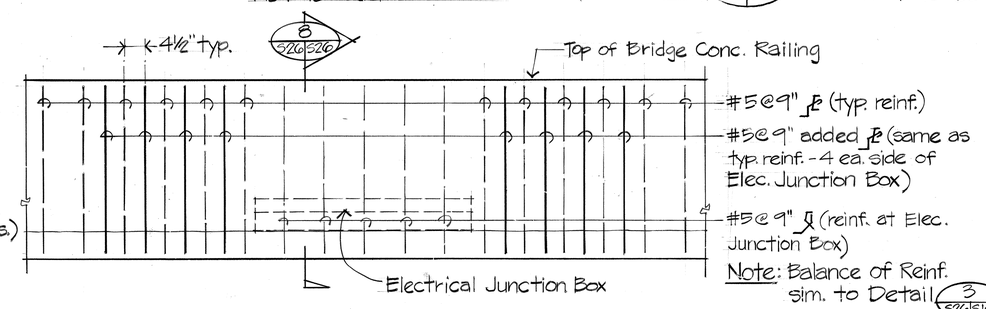


## BRIDGE CONC. RAILING ELEVATION ~ AT ELEC. JUNCTION BOX (9)

S26 | S26

Scale: 3/4" = 1'-0"

| DATE | REVISION |
|---|---|
| 1/10/89 | Detail 2 Revised. |

MYRON G. OKUBO REGISTERED PROFESSIONAL ENGINEER No. 4320-S HAWAII, U.S.A.

THIS WORK WAS PREPARED BY ME OR UNDER MY SUPERVISION

Myron Okubo

STATE OF HAWAII
DEPARTMENT OF TRANSPORTATION
HIGHWAYS DIVISION

# MISCELLANEOUS DETAILS

INTERSTATE ROUTE H-3
F.A.I. PROJECT NO. I-H3-1(52)

SCALE: AS NOTED DATE: JULY 1988

SHEET No. S26 OF S26 SHEETS

ORIGINAL PLAN | SURVEY PLOTTED BY | DRAWN BY | TRACED BY | DESIGNED BY | QUANTITIES BY | CHECKED BY | NOTE BOOK | No. | DATE

AS BUILT

ADD. 60

S26

57