FED. ROAD DIST. NO.	STATE	FED. AID PROJ. NO.	FISCAL YEAR	SHEET NO.	TOTAL SHEETS
HAWAII	HAW.	I-H3-1(64)	1990	492	531

ABBREVIATIONS

AFF	=	ABOVE FINISHED FLOOR
BLW	=	BELOW
BYD	=	BEYOND
CB	=	CONTROL BLDG.
DN	=	DOWN
DWG	=	DRAWING
EL	=	ELEVATION
EQ	=	EQUAL
EQ.RM.	=	COMMUNICATIONS EQUIPMENT ROOM
FF	=	FINISHED FLOOR
F.V. & E.	=	FIRE VALVE AND EXTINGUISHER
MAX	=	MAXIMUM
MIN	=	MINIMUM
ML	=	MATCH LINE
OPP	=	OPPOSITE
SIM	=	SIMILAR
TYP	=	TYPICAL
X-PSG	=	CROSS-PASSAGE
PVC	=	POLYVINYL CHLORIDE CONDUIT
GRS	=	GALVANIZED RIGID METAL CONDUIT

FIXTURE TYPE SYMBOLS

	PULL BOX
	MANHOLE
	SWING GATE FOUNDATION
	VEHICLE DETECTION STATION

CONDUIT

	RACEWAY STUBOUT WITH CAP
	RACEWAY TURNED DOWN OR AWAY
	RACEWAY TURNED UP OR TOWARD
	CONDUIT IN STRUCTURE
	UNDERGROUND DUCT
	CAPPED SLEEVE THROUGH FLOOR OR WALL SLAB
	BLOCK OUT, SIZE AS INDICATED

GENERAL NOTES

1. ALL CONDUITS SHALL BE EMBEDDED IN FLOOR SLAB ON PLAN VIEW OF LEVEL SHOWN UNLESS NOTED OTHERWISE.
2. SEE SHEET NO. TT10 FOR CONDUIT AND PULL BOX SCHEDULES.
3. THREAD AND CAP ALL SLEEVES THROUGH STRUCTURE AT EACH END AND ALL CONDUITS THAT DO NOT TERMINATE IN A PULLBOX.
4. END BELLS REQUIRED FOR ALL CONDUITS 3" OR GREATER.
5. INSTALL CONTINUOUS PULLING WIRE IN ALL CONDUITS AND TAG THE RACEWAY AT EACH END.
6. CONDUIT SIZES SHOWN IN CONTRACT DOCUMENTS REFERENCE THE MINIMUM INSIDE DIAMETER REQUIRED.

CONDUIT NUMBERING SYSTEM

S-1 THRU S-99	SYSTEMWIDE DUCTBANK
S-100 THRU S-199	BRANCH CIRCUITS, TUNNEL & EQUIP. ROOMS (ODD=INBOUND; EVEN=OUTBOUND)
S-200 THRU S-299	CONTROL BUILDING
S-300 THRU S-399	HALAWA I.B. PORTAL BUILDING
S-400 THRU S-499	HALAWA O.B. PORTAL BUILDING
S-500 THRU S-599	RESERVED
S-600 THRU S-699	RESERVED
S-700 THRU S-799	RESERVED
S-800 THRU S-899	RESERVED
S-900 THRU S-999	HALAWA APPROACH

PULLBOX IDENTIFICATION SYSTEM

PBS-15	PULLBOX; SYSTEMS, IN GRADE
PBS-IN	PULLBOX; SYSTEMS, X-PSG #1, INBOUND
PBS-4S	PULLBOX; SYSTEMS, X-PSG #4, OUTBOUND
PBT-5.IN	PULLBOX; TRAFFIC CONTROL, X-PSG #5, INBOUND
HHS-1.1S	PULLBOX; HANDHOLE, X-PSG #1, OUTBOUND
NWC-2.0	PULLBOX; COMMUNICATIONS, HALAWA IB PORTAL, SECOND FLOOR LEVEL
SWF-3.0	PULLBOX; FIRE PROTECTION, HALAWA OB PORTAL, THIRD FLOOR LEVEL
NWT-2.0	PULLBOX; TRAFFIC CONTROL, HALAWA IB PORTAL, SECOND FLOOR LEVEL
JBF-5.2S	PULLBOX; FIRE DETECTION TUNNEL, OUTBOUND

CIRCUIT IDENTIFIERS

FP	FIRE PROTECTION
ID	INTRUSION DETECTION
SC	SUPERVISORY & CONTROL
T	TELEPHONE
SP	SPARE(EMPTY)
IC	INTER-COMMUNICATIONS
S-600	CONDUIT IDENTIFICATION NUMBER
TC	TRAFFIC CONTROL
CO	COMMUNICATIONS ONLY

		DATE
ORIGINAL PLAN	SURVEY PLOTTED BY	
	DRAWN BY CADD	06/27/90
NOTEBOOK	TRACED BY W.WILLIAMS	
	DESIGNED BY	6/28/89
No.	QUANTITIES BY H.SMITH	
	CHECKED BY	06/27/90

STANLEY M. O. T. CHING
REGISTERED PROFESSIONAL ENGINEER
No. 6312-C
HAWAII, U.S.A.

THIS WORK WAS PREPARED BY ME OR UNDER MY SUPERVISION

Stanley M.O.T. Ching

DATE	REVISION

STATE OF HAWAII
DEPARTMENT OF TRANSPORTATION
HIGHWAYS DIVISION

SYSTEMS LEGEND

STANDARDS

INTERSTATE ROUTE H-3

F.A.I. PROJ. NO. I-H3-1(64)

SCALE: NONE DATE: JUN. 1990

SHEET NO. T1 OF 2 SHEETS

T1-H3SC -H3\C1 -06-27-90

FED. ROAD DIST. NO.	STATE	FED. AID PROJ. NO.	FISCAL YEAR	SHEET NO.	TOTAL SHEETS
HAWAII	HAW.	I-H3-1(64)	1990	493	531

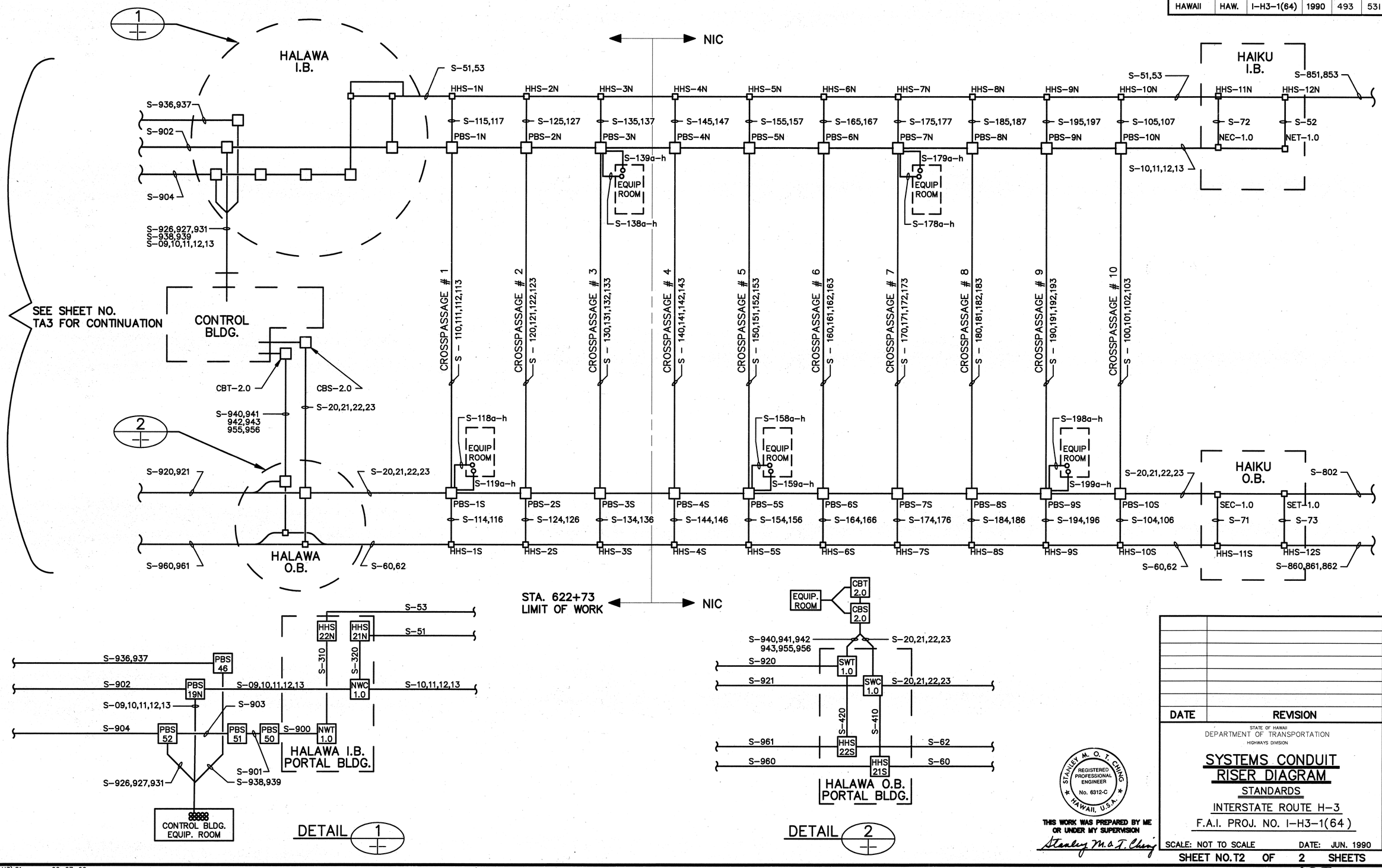

DATE	REVISION

STATE OF HAWAII
DEPARTMENT OF TRANSPORTATION
HIGHWAYS DIVISION

SYSTEMS CONDUIT RISER DIAGRAM

STANDARDS

INTERSTATE ROUTE H-3

F.A.I. PROJ. NO. I-H3-1(64)

SCALE: NOT TO SCALE DATE: JUN. 1990

SHEET NO. T2 OF 2 SHEETS

STANLEY M. O. T. CHING
REGISTERED PROFESSIONAL ENGINEER
No. 6312-C
HAWAII, U.S.A.

THIS WORK WAS PREPARED BY ME OR UNDER MY SUPERVISION

Stanley M. O. T. Ching

SURVEY PLOTTED BY	CADD	06/27/90
DRAWN BY	"	"
TRACED BY	W.WILLIAMS	6/26/89
DESIGNED BY	"	"
QUANTITIES BY	H.SMITH	06/27/90
CHECKED BY	"	"

ORIGINAL PLAN
NOTEBOOK
No.

T2-H3SC -H3\C1 -06-27-90

FED. ROAD DIST. NO.	STATE	FED. AID PROJ. NO.	FISCAL YEAR	SHEET NO.	TOTAL SHEETS
HAWAII	HAW	I-H3-1(64)	1990	494	531

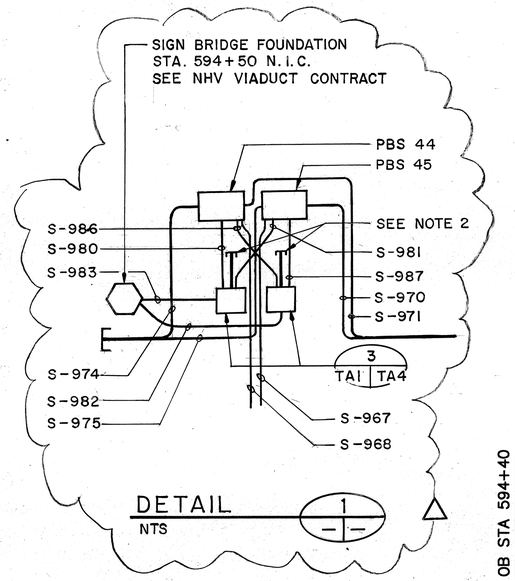

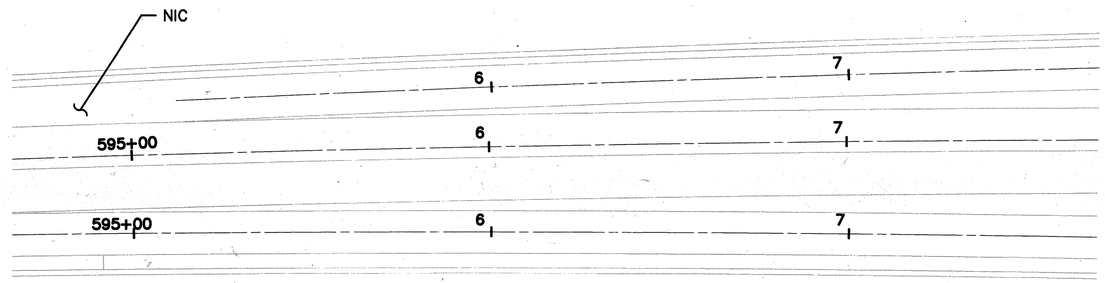

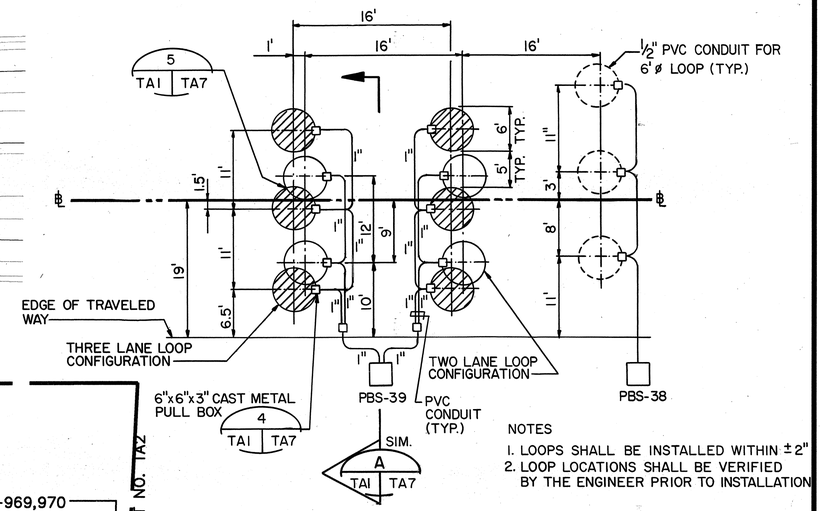

NOTES

1. LOOPS SHALL BE INSTALLED WITHIN ±2"
2. LOOP LOCATIONS SHALL BE VERIFIED BY THE ENGINEER PRIOR TO INSTALLATION

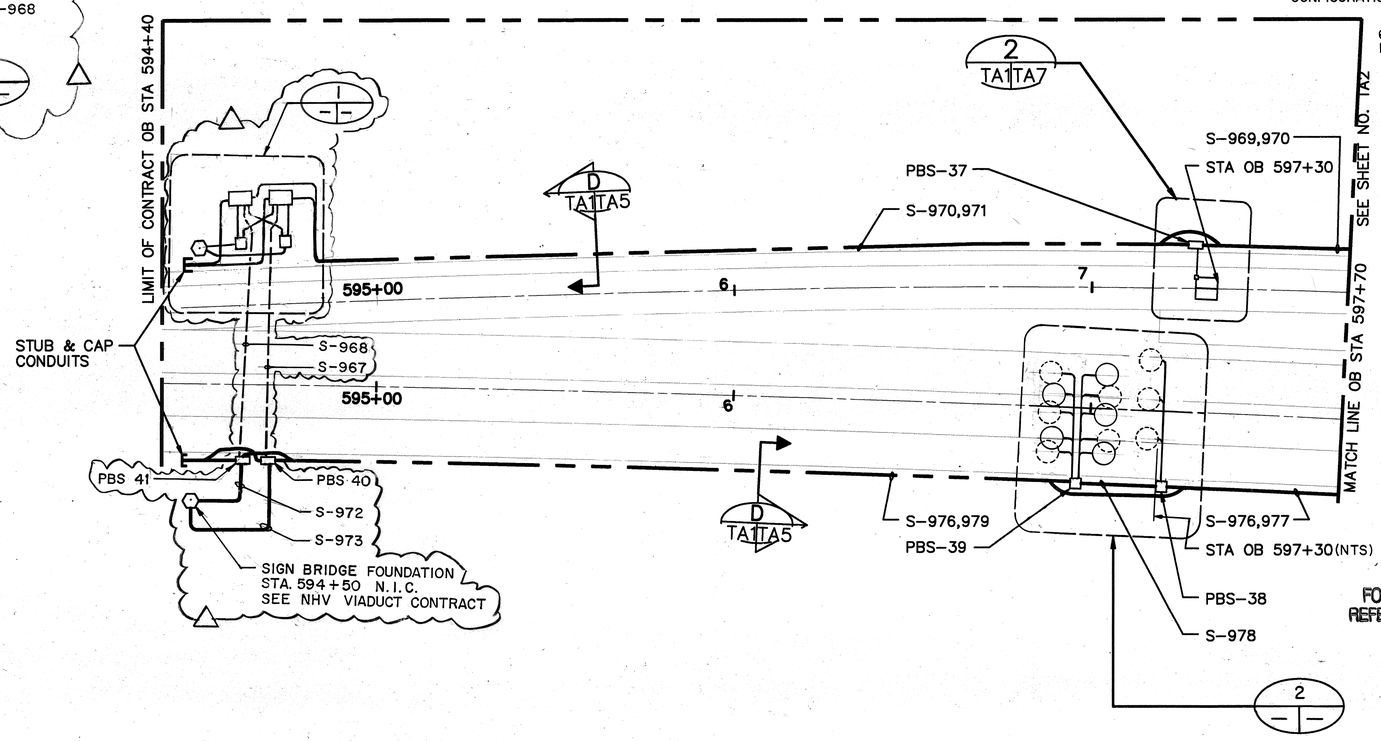

NOTES:

1. CONNECT TO EXISTING CONDUITS AND EXTEND AS INDICATED.
2. SEE ELECTRICAL SHEETS FOR ELECTRICAL CONDUITS

FOR DETAIL AS-BUILT INFORMATION REFER TO CONSTRUCTION SUBMITTALS

GRAPHIC SCALE:
20' 10' 0' 20' 40'
1" = 20'-0"

STANLEY M. O. T. CHING
REGISTERED PROFESSIONAL ENGINEER
No. 6312-C
HAWAII, U.S.A.

THIS WORK WAS PREPARED BY ME OR UNDER MY SUPERVISION

Stanley M.O.T. Ching

DATE	REVISION
12/20/94	REV. PER DCN 64-072
4/25/93	REVISED LOOP CONFIGURATION AND ADDED DETAIL 1 PER DCN 64-064

STATE OF HAWAII
DEPARTMENT OF TRANSPORTATION
HIGHWAYS DIVISION

SYSTEMS CONDUIT
ROADWAY LEVEL-1
HALAWA APPROACH

INTERSTATE ROUTE H-3
F.A.I. PROJ. NO. I-H3-1(64)

SCALE: 1" = 20'-0" DATE: JUN. 1990

SHEET NO. TA1 OF 7 SHEETS

ORIGINAL PLAN		DATE
	SURVEY PLOTTED BY	
	DRAWN BY CADD	6/27/90
	TRACED BY	
NOTEBOOK	DESIGNED BY D.ANDERSON	6/26/89
	QUANTITIES BY	
No.	CHECKED BY H.SMITH	6/27/90

H31-TA1 -H3\C1 -06/27/90

FED. ROAD DIST. NO.	STATE	FED. AID PROJ. NO.	FISCAL YEAR	SHEET NO.	TOTAL SHEETS
HAWAII	HAW	I-H3-1(64)	1990	495	531

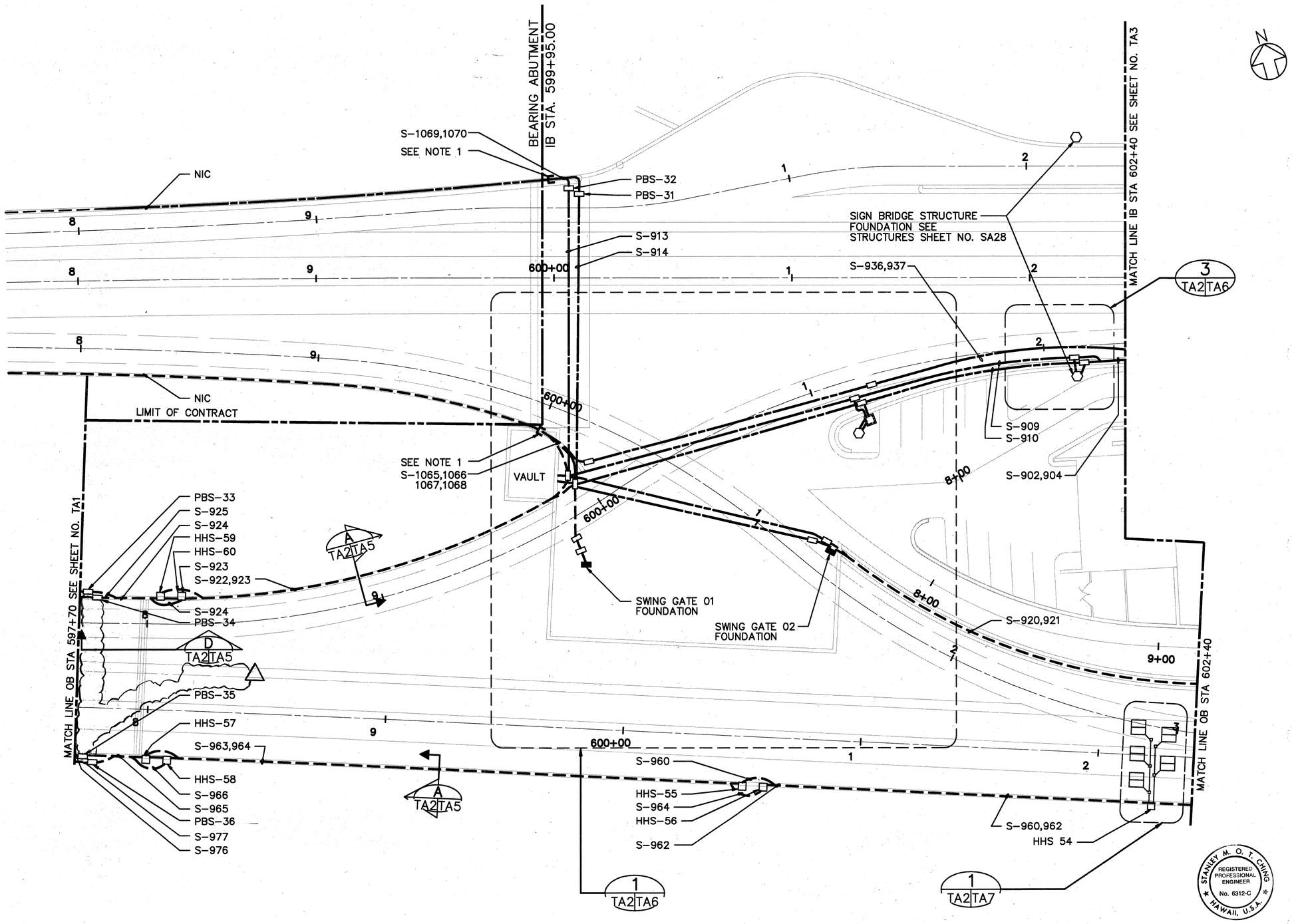

NOTES:

1. STUB & CAP CONDUITS AS INDICATED.
2. SEE ELECTRICAL PLANS FOR ELECTRICAL CONDUITS

DATE	REVISION
12/20/94	REV. PER DCN 64-072

STATE OF HAWAII
DEPARTMENT OF TRANSPORTATION
HIGHWAYS DIVISION

SYSTEMS CONDUIT ROADWAY LEVEL-2

HALAWA APPROACH

INTERSTATE ROUTE H-3

F.A.I. PROJ. NO. I-H3-1(64)

SCALE: 1" = 20'-0" DATE: JUN. 1990

SHEET NO. TA2 OF 7 SHEETS

STANLEY M. O. T. CHING
REGISTERED PROFESSIONAL ENGINEER
No. 6312-C
HAWAII, U.S.A.

THIS WORK WAS PREPARED BY ME OR UNDER MY SUPERVISION

Stanley M. O. T. Ching

GRAPHIC SCALE:
20' 10' 0' 20' 40'
1" = 20'-0"

ORIGINAL PLAN		DATE
	SURVEY PLOTTED BY	
	DRAWN BY	CADD 6/27/90
NOTEBOOK	TRACED BY	
	DESIGNED BY	D.ANDERSON 6/26/89
No.	QUANTITIES BY	
	CHECKED BY	H.SMITH 6/27/90

H31-TA2 -H3\C1 -06/27/90

FED. ROAD DIST. NO.	STATE	FED. AID PROJ. NO.	FISCAL YEAR	SHEET NO.	TOTAL SHEETS
HAWAII	HAW	I-H3-1(64)	1990	496	531

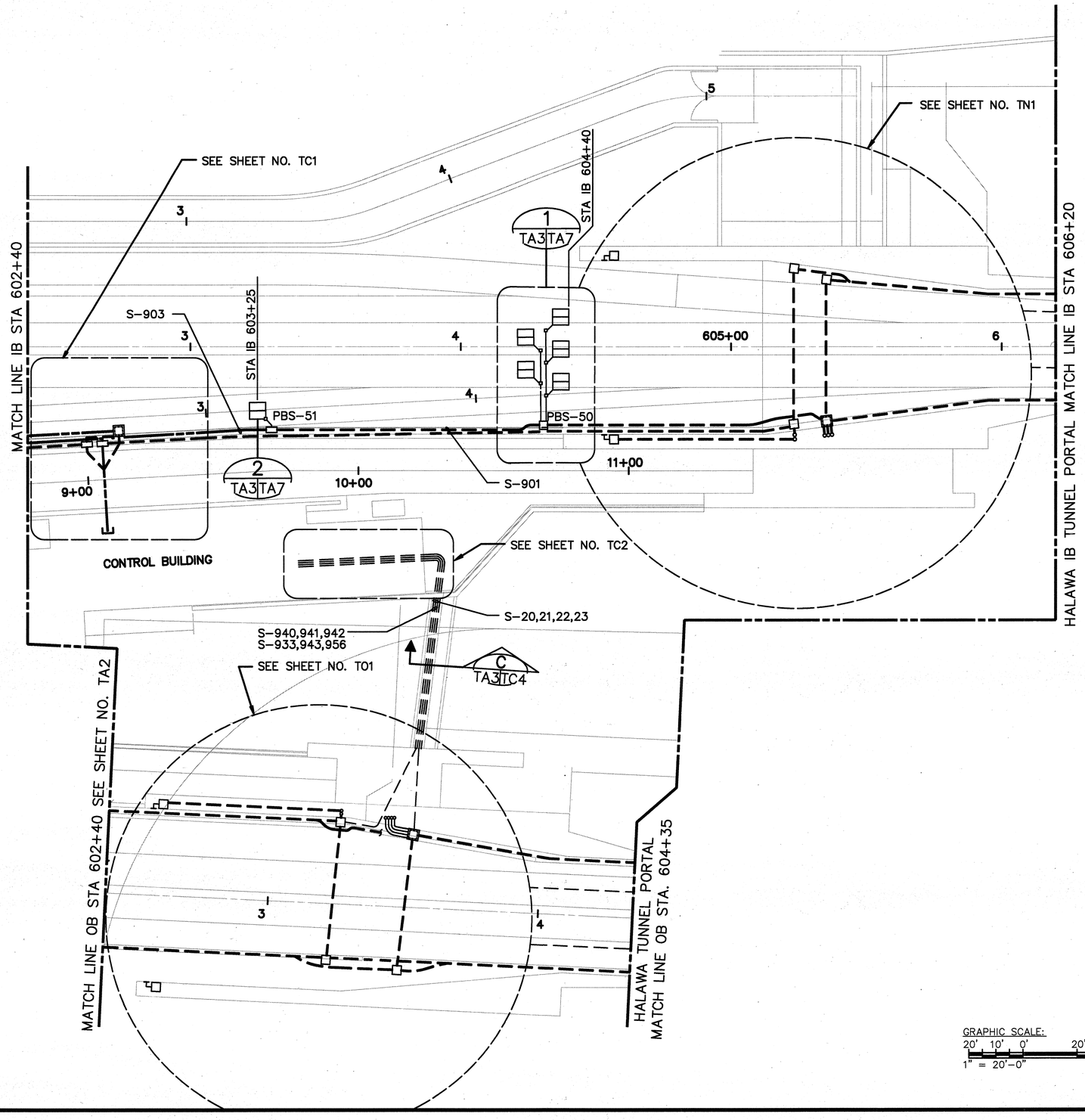

NOTES:

1. CONNECT TO EXISTING CONDUITS AND EXTEND AS INDICATED.
2. SEE ELECTRICAL SHEETS FOR ELECTRICAL CONDUITS
3. JBF-X.YZ PULLBOXES ARE CEILING MOUNTED AND SHOWN HERE FOR CONTINUITY. SEE SHEET NO. TT9.

GRAPHIC SCALE:
20' 10' 0' 20' 40'
1" = 20'-0"

STANLEY M. O. T. CHING
REGISTERED PROFESSIONAL ENGINEER
No. 6312-C
HAWAII, U.S.A.

THIS WORK WAS PREPARED BY ME OR UNDER MY SUPERVISION
Stanley M. O. T. Ching

DATE	REVISION

STATE OF HAWAII
DEPARTMENT OF TRANSPORTATION
HIGHWAYS DIVISION

SYSTEMS CONDUIT
ROADWAY LEVEL-3
HALAWA APPROACH
INTERSTATE ROUTE H-3
F.A.I. PROJ. NO. I-H3-1(64)

SCALE: 1" = 20'-0" DATE: JUN. 1990

SHEET NO. TA3 OF 7 SHEETS

ORIGINAL PLAN	SURVEY PLOTTED BY	DATE 6/27/90
	DRAWN BY CADD	
	TRACED BY	
NOTEBOOK	DESIGNED BY D.ANDERSON	6/26/90
	QUANTITIES BY	
No.	CHECKED BY H.SMITH	6/27/90

H31-TA3 -H3-C1 -06-27-90

FED. ROAD DIST. NO.	STATE	FED. AID PROJ. NO.	FISCAL YEAR	SHEET NO.	TOTAL SHEETS
HAWAII	HAW.	I-H3-I(64)	1990	497	531

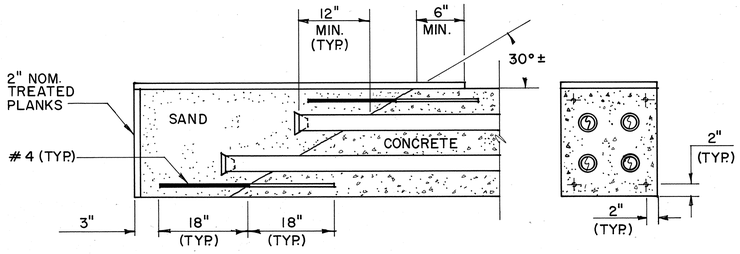

EXTEND SAND ENCASED REBAR TO WITHIN 3" OF PLANKS.
CUT CONDUIT TO LENGTH, FINISH EACH END FOR COUPLING, AND INSTALL PLASTIC PLUGS AND PULL WIRES IN ALL DUCTS.
NUMBER OF CONDUITS PER DUCTBANK MAY VARY.

ENCASED CONDUIT TERMINATION DETAIL

SCALE: NONE

1 / TT3 TA4

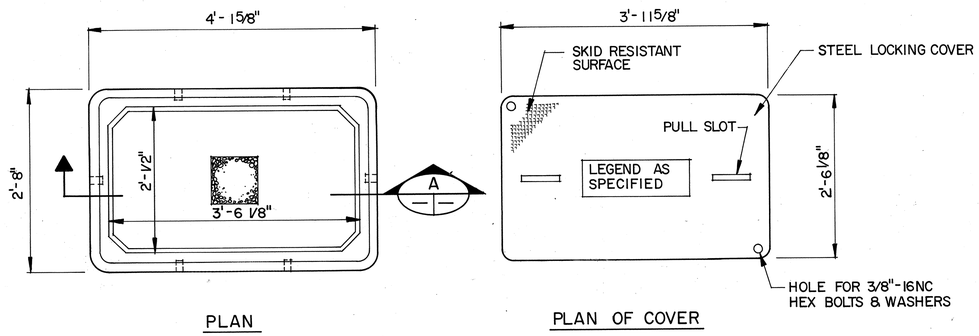

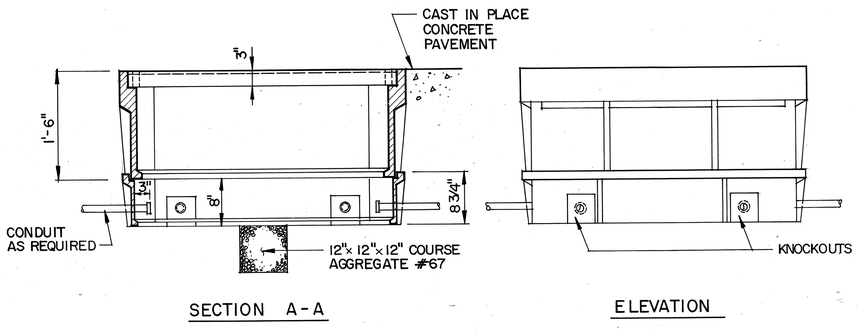

NOTES:

BOXES SHALL BE POLYMER CONCRETE, FIBER GLASS REINFORCED.
PROVIDE STACKED BOXES WITH APPROPRIATE KNOCK OUTS TO ACCOMMODATE REQUIRED NUMBER & SIZES OF CONDUITS.
FOR LEGEND SEE SHEET NO TI.

TYPE 2 PULL BOX

DETAIL 4

SCALE: 1"= 1'-0" TAI, TA2, TA3 TA4

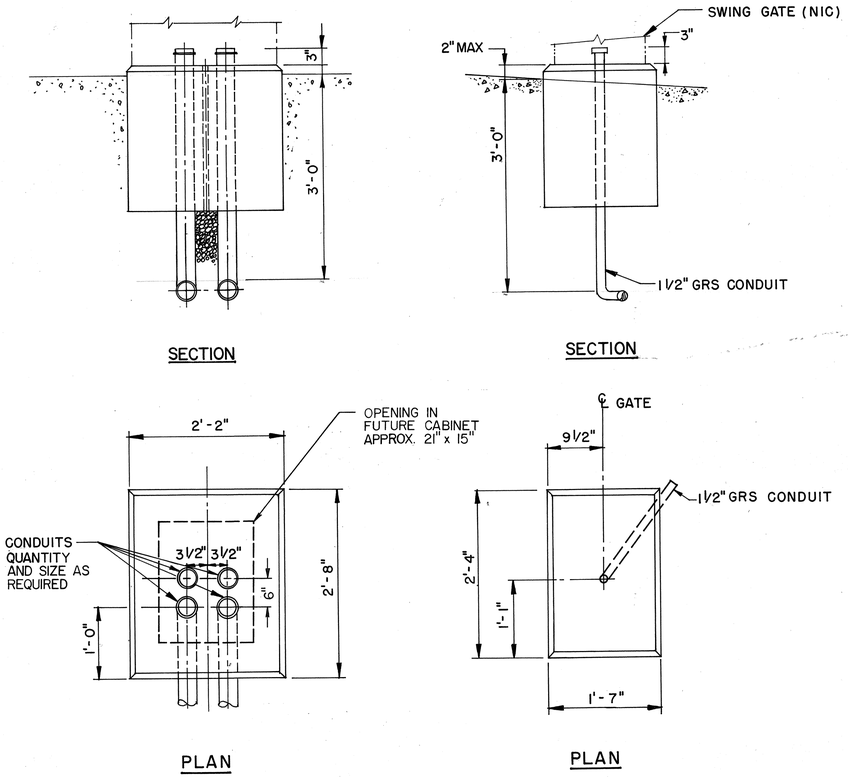

CONTROLLER FOUNDATION

DETAIL 3

SCALE: 1"=1'-0" TAI, TA2 TA4

SWING GATE FOUNDATION

DETAIL 2

SCALE: 1"=1'-0" TA2 TA4

NOTE:

1. SEE STRUCTURAL PLANS FOR FOUNDATION CONSTRUCTION DETAILS.

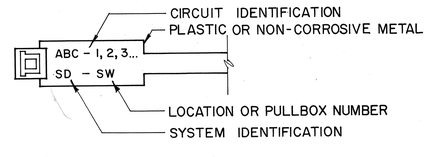

CABLE MARKER TIES DETAIL

SCALE: NONE

5 / TI TA4

GRAPHIC SCALE

1' 0' 1' 2'

1" = 1'-0"

STANLEY M. O. T. CHING
REGISTERED PROFESSIONAL ENGINEER
No. 6312-C
HAWAII, U.S.A.

THIS WORK WAS PREPARED BY ME OR UNDER MY SUPERVISION

Stanley M. O. T. Ching

DATE	REVISION

STATE OF HAWAII
DEPARTMENT OF TRANSPORTATION
HIGHWAYS DIVISION

SYSTEMS CONDUIT SECTIONS & DETAILS-1

HALAWA APPROACH
INTERSTATE ROUTE H-3
F.A.I. PROJ. NO. I-H3-I(64)

SCALE: AS NOTED DATE: JUN 1990

SHEET NO. TA4 OF 7 SHEETS

		DATE
ORIGINAL PLAN	SURVEY PLOTTED BY	
	DRAWN BY R. HOMOLYA	6/20/90
	TRACED BY	
NOTE BOOK	DESIGNED BY B. NARAMATSU	6/20/90
	QUANTITIES BY	
No.	CHECKED BY H. SMITH	6/20/90

FED. ROAD DIST. NO.	STATE	FED. AID PROJ. NO.	FISCAL YEAR	SHEET NO.	TOTAL SHEETS
HAWAII	HAW.	I-H3-1(64)	1990	498	531

*FOR POWER AND LIGHTING CONDUITS
SEE ELECTRICAL PLANS

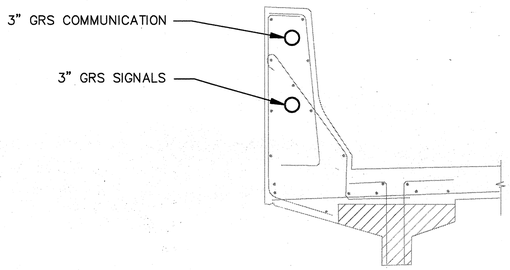

SECTION A TA2 TA5

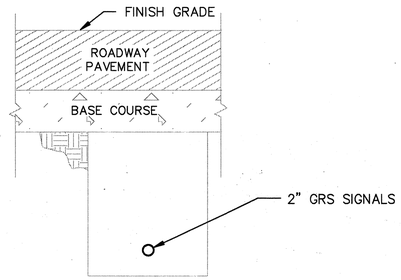

SECTION B TA6 TA5

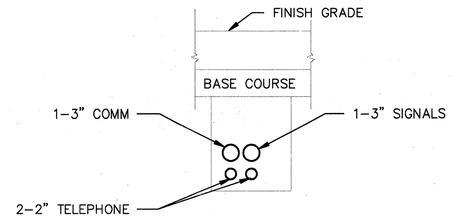

SECTION C TA6 TA5

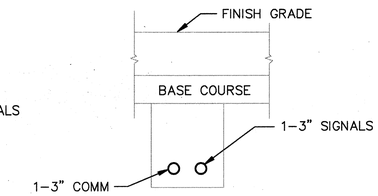

SECTION D TA1, TA6 TA5

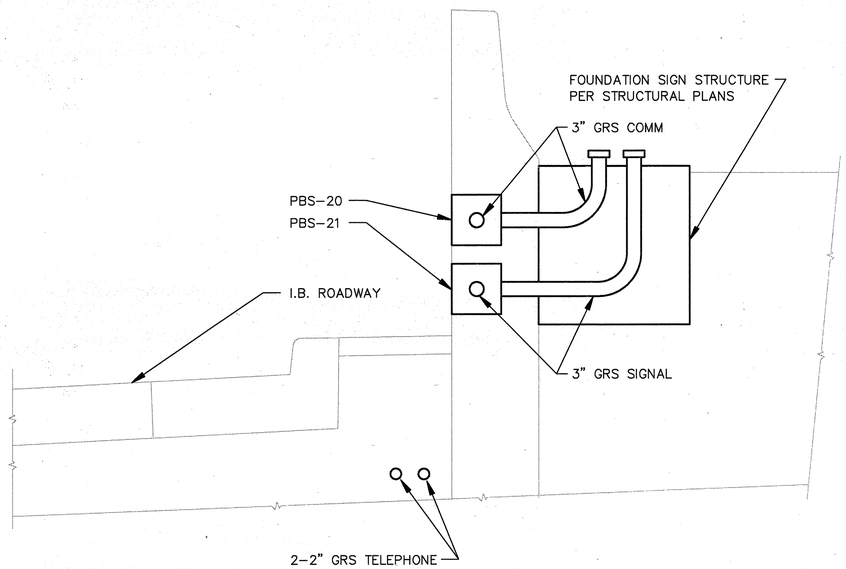

SECTION E TA6 TA5

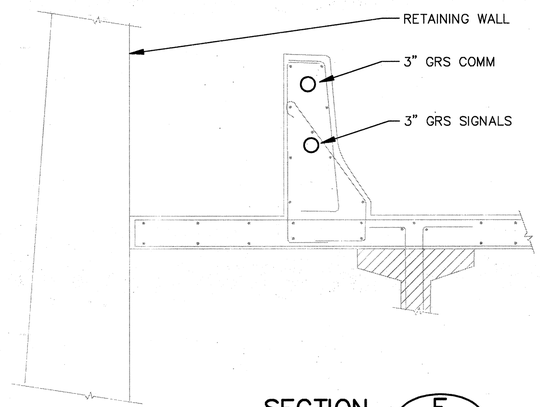

SECTION F TA6 TA5

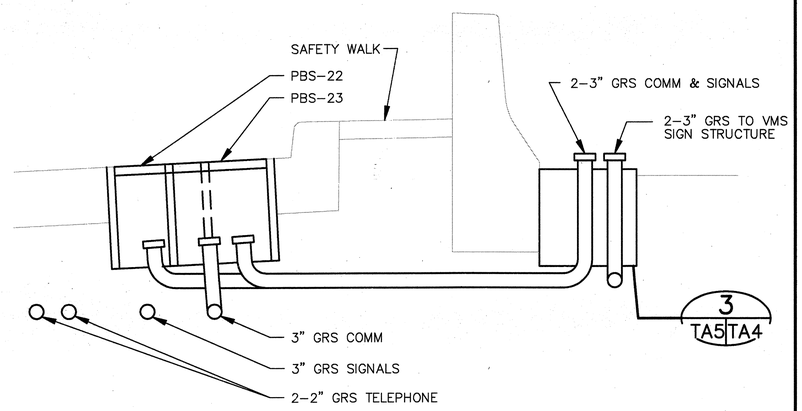

3 TA5 TA4

SECTION G TA6 TA5

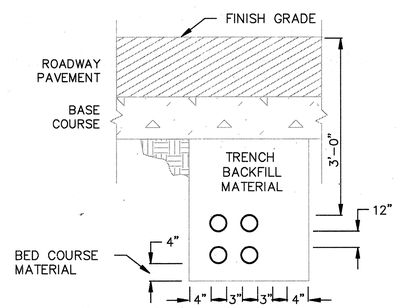

TYPICAL TRENCH SECTION FOR CONDUITS

ORIGINAL PLAN		DATE
	SURVEY PLOTTED BY CADD	6/27/90
	DRAWN BY	
	TRACED BY	
NOTEBOOK	DESIGNED BY D.ANDERSON	6/28/89
	QUANTITIES BY H.SMITH	
No.	CHECKED BY	6/27/90

DATE	REVISION

STATE OF HAWAII
DEPARTMENT OF TRANSPORTATION
HIGHWAYS DIVISION

SYSTEMS CONDUIT SECTIONS & DETAILS-2

HALAWA APPROACH

INTERSTATE ROUTE H-3

F.A.I. PROJ. NO. I-H3-1(64)

STANLEY M. O. T. CHING
REGISTERED PROFESSIONAL ENGINEER
No. 6312-C
HAWAII, U.S.A.

THIS WORK WAS PREPARED BY ME OR UNDER MY SUPERVISION

Stanley M. O. T. Ching

SCALE: AS NOTED DATE: JUN. 1990

SHEET NO. TA5 OF 7 SHEETS

H31-TA5 -H3\C1 -06-27-90

FED. ROAD DIST. NO.	STATE	FED. AID PROJ. NO.	FISCAL YEAR	SHEET NO.	TOTAL SHEETS
HAWAII	HAW.	I-H3-1(64)	1990	499	531

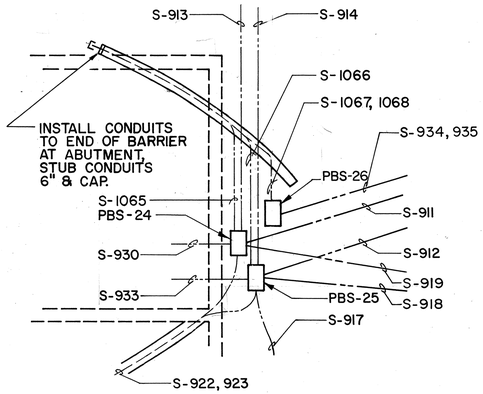

DETAIL 2 (TA2 | TA6)
SCALE: NONE

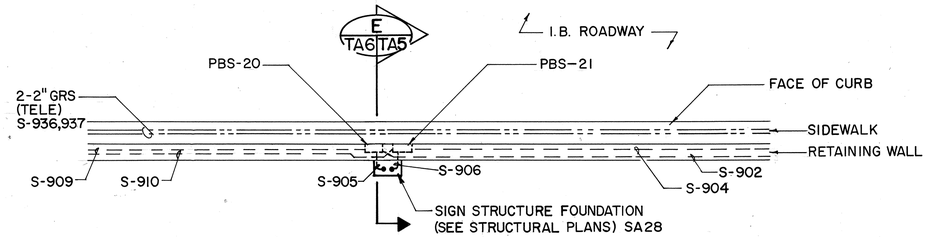

DETAIL 3 (TA2 | TA6)
SCALE: NONE

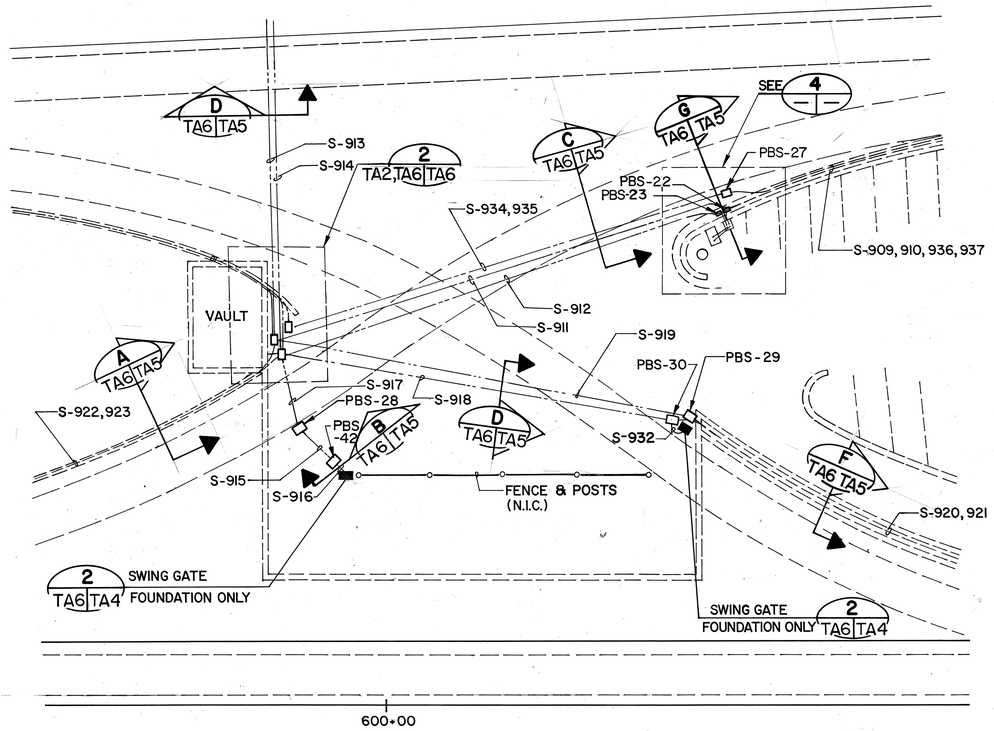

DETAIL 1 (TA2 | TA6)
SCALE: 1" = 20'-0"

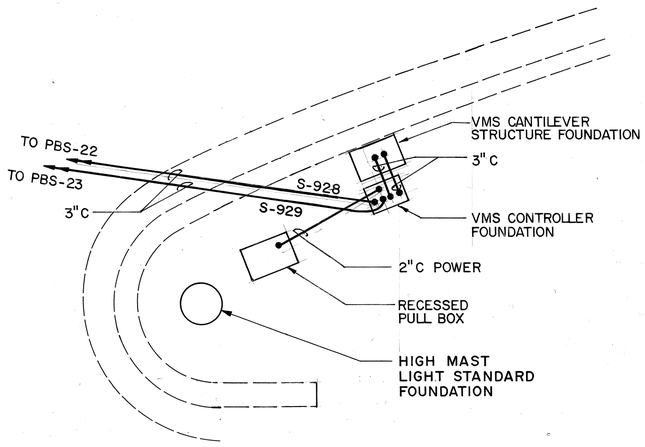

DETAIL 4
SCALE: NONE

GRAPHIC SCALE
20' 0 20' 40'
1" = 20'

STANLEY M. O. T. CHING
REGISTERED PROFESSIONAL ENGINEER
No. 6312-C
HAWAII, U.S.A.

THIS WORK WAS PREPARED BY ME OR UNDER MY SUPERVISION
Stanley M.O.T. Ching

DATE	REVISION

STATE OF HAWAII
DEPARTMENT OF TRANSPORTATION
HIGHWAYS DIVISION

SYSTEMS CONDUIT SECTIONS & DETAILS - 3

HALAWA APPROACH
INTERSTATE ROUTE H-3
F.A.I. PROJ. NO. I-H3-1(64)

SCALE: AS NOTED DATE: JUN 1990

SHEET NO. TA6 OF 7 SHEETS

ORIGINAL PLAN		DATE
	SURVEY PLOTTED BY	
	DRAWN BY S. LEWIS	6/6/90
	TRACED BY	"
NOTE BOOK	DESIGNED BY D. ANDERSON	6/6/90
	QUANTITIES BY	"
No.	CHECKED BY J. SMITH	6/6/90

FED. ROAD DIST. NO.	STATE	FED. AID PROJ. NO.	FISCAL YEAR	SHEET NO.	TOTAL SHEETS
HAWAII	HAW.	I-H3-I(64)	1990	500	531

NOTE:

AT SPEED LOOP LOCATIONS INSTALL IDENTICAL CONFIGURATION 20 FEET BACK FROM 1ST SET.

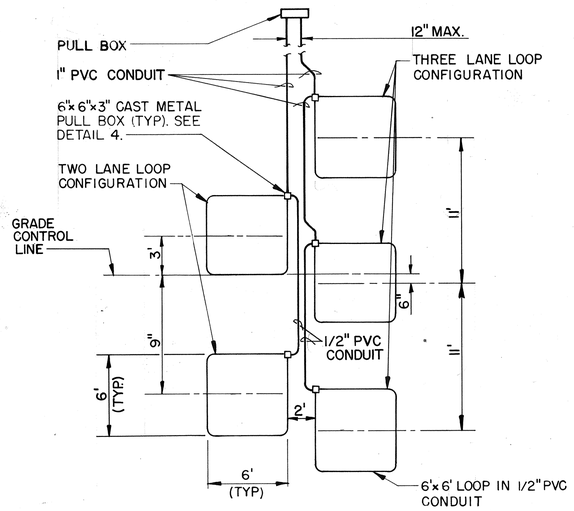

DETAIL 2
SCALE: 3/16" = 1'-0" TA1,TA3 | TA7

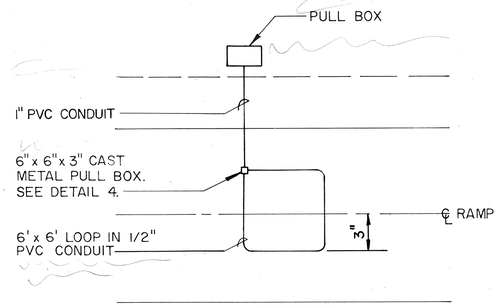

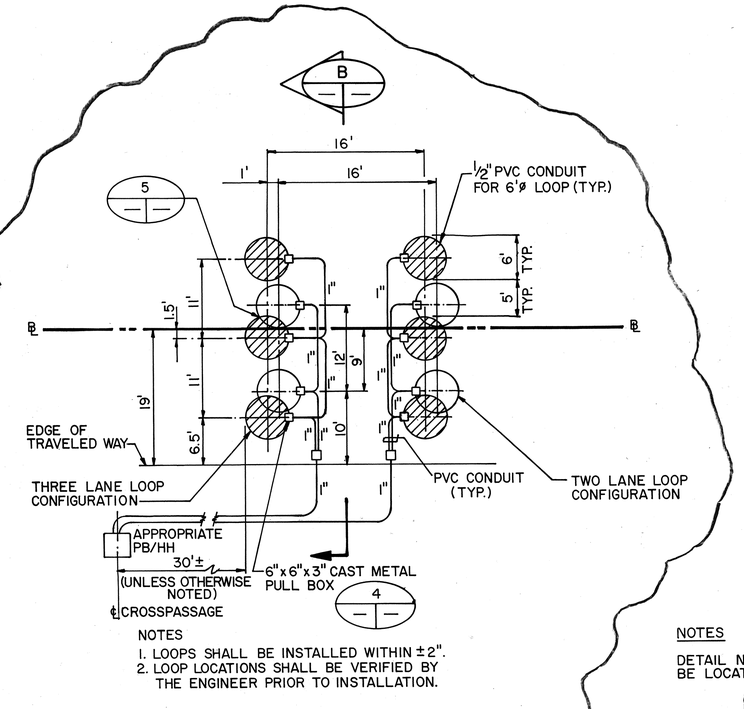

NOTES

1. LOOPS SHALL BE INSTALLED WITHIN ±2".
2. LOOP LOCATIONS SHALL BE VERIFIED BY THE ENGINEER PRIOR TO INSTALLATION.

DETAIL 3
NTS TT1,TT2,TT3 | TA7

NOTES

DETAIL NO.1 VEHICLE DETECTOR STATIONS TO BE LOCATED AT THE FOLLOWING CIVIL STATIONS:

OB STA. 597+30
OB STA. 602+35
IB STA. 604+40

DETAIL NO. 2 VEHICLE DETECTOR STATIONS LOCATED AT:

OB STA. 597+30
IB STA. 603+25

DETAIL NO. 3 VEHICLE DETECTOR STATIONS LOCATED AT:

OB STA. 607+80
OB STA. 612+80
OB STA. 617+80
OB STA. 622+50
IB STA. 608+75
IB STA. 613+60
IB STA. 618+45

DETAIL 1
SCALE: 3/16" = 1'-0" TA2,TA3 | TA7

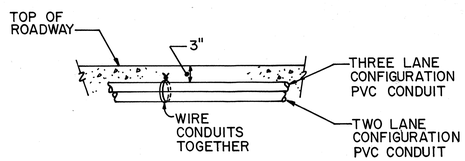

CONDUIT CROSSING
(TYPICAL)

DETAIL 5
NTS TT1,TT2,TT3 | TA7
TA1,TA7

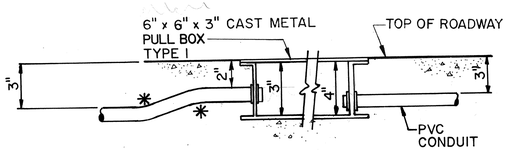

*FIELD BENDING SHALL BE PERMITTED ONLY IF BENDING EQUIPMENT IDENTIFIED FOR THIS PURPOSE IS USED, AND THAT THE MAXIMUM BENDING RADIUS SHOWN IN NEC TABLE 346-10 IS USED.

DETAIL 4
NTS TA1,TA7 | TA7

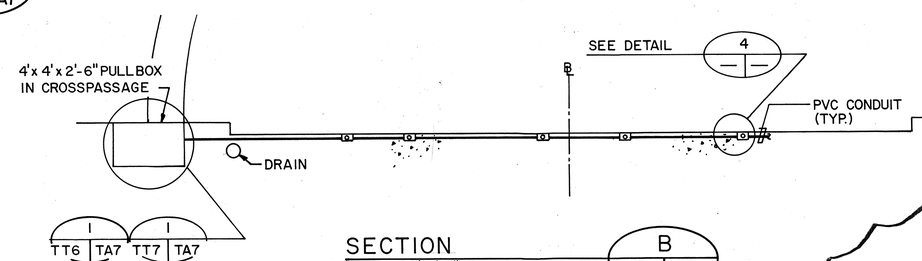

SECTION B
SCALE: 1/4" = 1'-0" TA1,TA7 | TA7

GRAPHIC SCALE
0' 3" 6" 9" 1'
3" = 1'-0"
4' 0' 4' 8' 12'
3/16" = 1'-0"

STANLEY M. O. T. CHING
REGISTERED PROFESSIONAL ENGINEER
No. 6312-C
HAWAII, U.S.A.

THIS WORK WAS PREPARED BY ME OR UNDER MY SUPERVISION

Stanley M.O.T. Ching

DATE	REVISION
4/25/93	REVISED DETAILS '3' & '4', ADDED
	DETAIL '5' & SECTION 'B' PER DCN64-064

STATE OF HAWAII
DEPARTMENT OF TRANSPORTATION
HIGHWAYS DIVISION

SYSTEMS
VEHICLE DETECTION DETAILS

HALAWA APPROACH
INTERSTATE ROUTE H-3
F.A.I. PROJ. NO. I-H3-I(64)

SCALE: AS NOTED DATE: JUN 1990

SHEET NO. TA7 OF 7 SHEETS

PREPARED BY	R. HOMOLYA	6/24/90
DRAWN BY	B. NARIMATSU	6/24/90
CHECKED BY	H. SMITH	6/24/90
APPROVED BY		

FOR FHWA USE ONLY
FUNCTIONAL CLASSIFICATION
SCALE
DATE
SHEET NO.

500

FED. ROAD DIST. NO.	STATE	FED. AID PROJ. NO.	FISCAL YEAR	SHEET NO.	TOTAL SHEETS
HAWAII	HAW.	I-H3-1(64)	1990	501	531

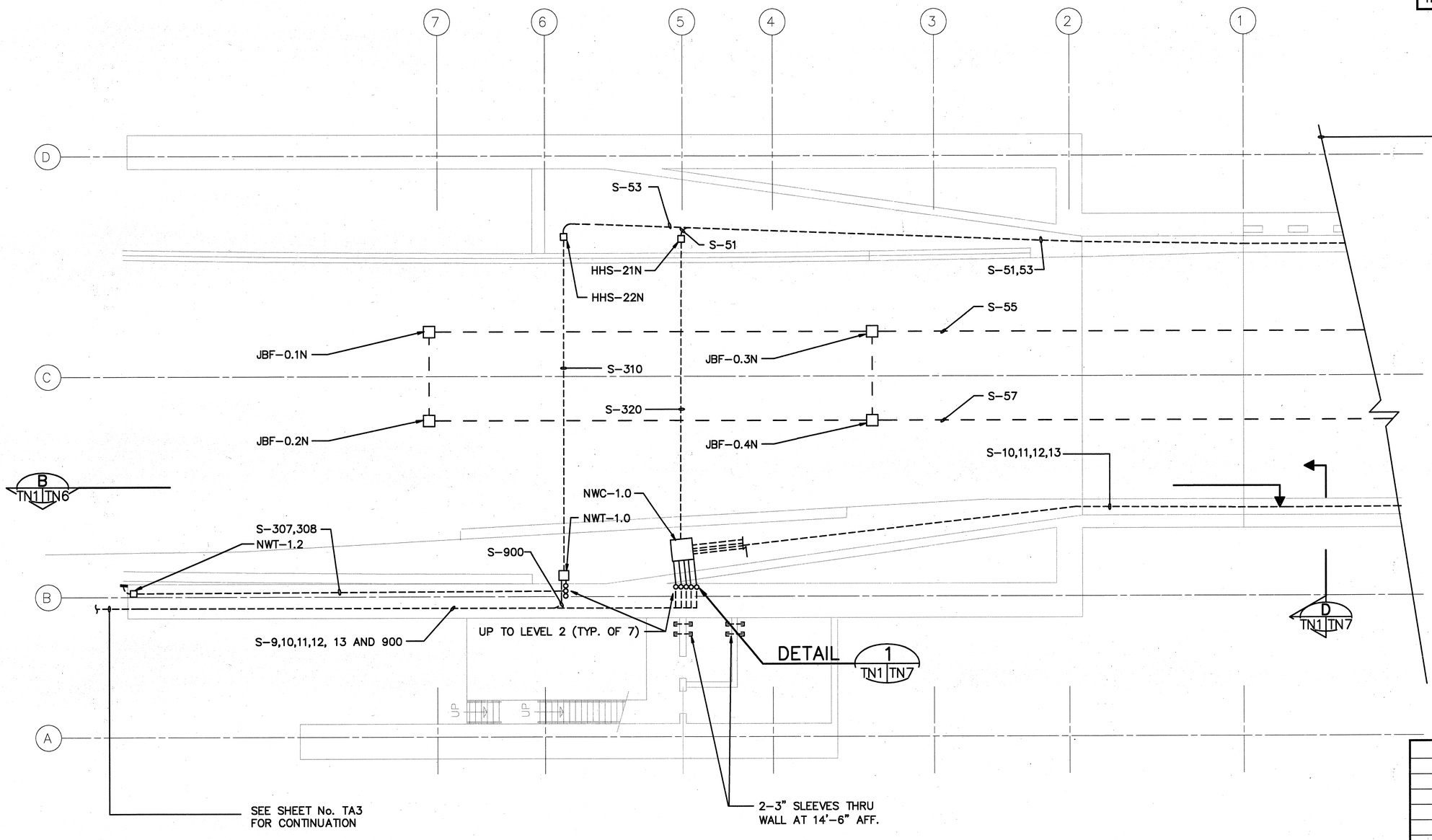

NOTE

1. JBF – X,Y,Z PULLBOXES ARE CEILING MOUNTED AND SHOWN HERE FOR CONTINUITY. SEE SHEET NO. TT9.

FOR DETAIL AS-BUILT INFORMATION REFER TO CONSTRUCTION SUBMITTALS

GRAPHIC SCALE:
8' 4' 0' 8' 16'
1/8" = 1'-0"

STANLEY M. O. T. CHING
REGISTERED PROFESSIONAL ENGINEER
No. 6312-C
HAWAII, U.S.A.

THIS WORK WAS PREPARED BY ME OR UNDER MY SUPERVISION

Stanley M. O. T. Ching

DATE	REVISION

STATE OF HAWAII
DEPARTMENT OF TRANSPORTATION
HIGHWAYS DIVISION

SYSTEMS CONDUIT LEVEL 1 PLAN

HALAWA PORTAL BUILDING-IB

INTERSTATE ROUTE H-3

F.A.I. PROJ. NO. I-H3-1(64)

SCALE: 1/8" = 1'-0" DATE: JUN. 1990

SHEET NO. TN1 OF 8 SHEETS

ORIGINAL PLAN		DATE
	SURVEY PLOTTED BY CADD	06/27/90
	DRAWN BY	
NOTEBOOK	TRACED BY	6/26/93
	DESIGNED BY W.WILLIAMS	
	QUANTITIES BY H.SMITH	
No.	CHECKED BY	06/27/90

H3SC-TN1-H3\C1 -06-27-90

FED. ROAD DIST. NO.	STATE	FED. AID PROJ. NO.	FISCAL YEAR	SHEET NO.	TOTAL SHEETS
HAWAII	HAW.	I-H3-1(64)	1990	502	531

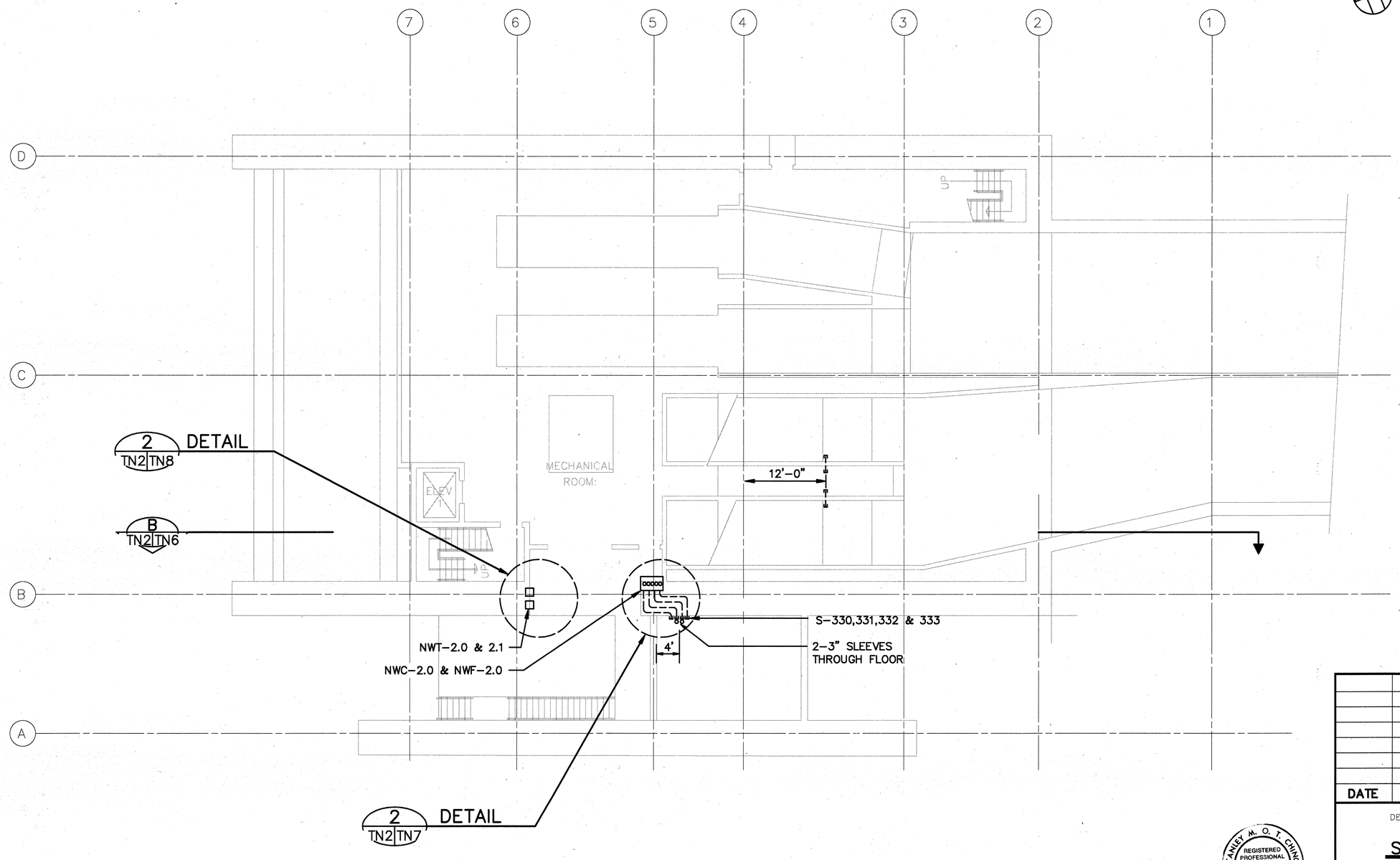

GRAPHIC SCALE:
8' 4' 0' 8' 16'
1/8" = 1'-0"

DATE	REVISION

STATE OF HAWAII
DEPARTMENT OF TRANSPORTATION
HIGHWAYS DIVISION

SYSTEMS CONDUIT LEVEL 2 PLAN

HALAWA PORTAL BUILDING-IB

INTERSTATE ROUTE H-3

F.A.I. PROJ. NO. I-H3-1(64)

SCALE: 1/8"=1'-0" DATE: JUN. 1990

SHEET NO. TN2 OF 8 SHEETS

STANLEY M. O. T. CHING
REGISTERED PROFESSIONAL ENGINEER
No. 6312-C
HAWAII, U.S.A.

THIS WORK WAS PREPARED BY ME OR UNDER MY SUPERVISION

Stanley M.O.T. Ching

ORIGINAL PLAN		DATE
	SURVEY PLOTTED BY CADD	06/27/90
	DRAWN BY	
	TRACED BY W.WILLIAMS	
NOTEBOOK	DESIGNED BY	5/26/89
	QUANTITIES BY H.SMITH	
No.	CHECKED BY	06/27/90

H3SC-TN2-H3\C1 -06-27-90

502

FED. ROAD DIST. NO.	STATE	FED. AID PROJ. NO.	FISCAL YEAR	SHEET NO.	TOTAL SHEETS
HAWAII	HAW.	I-H3-1(64)	1990	503	531

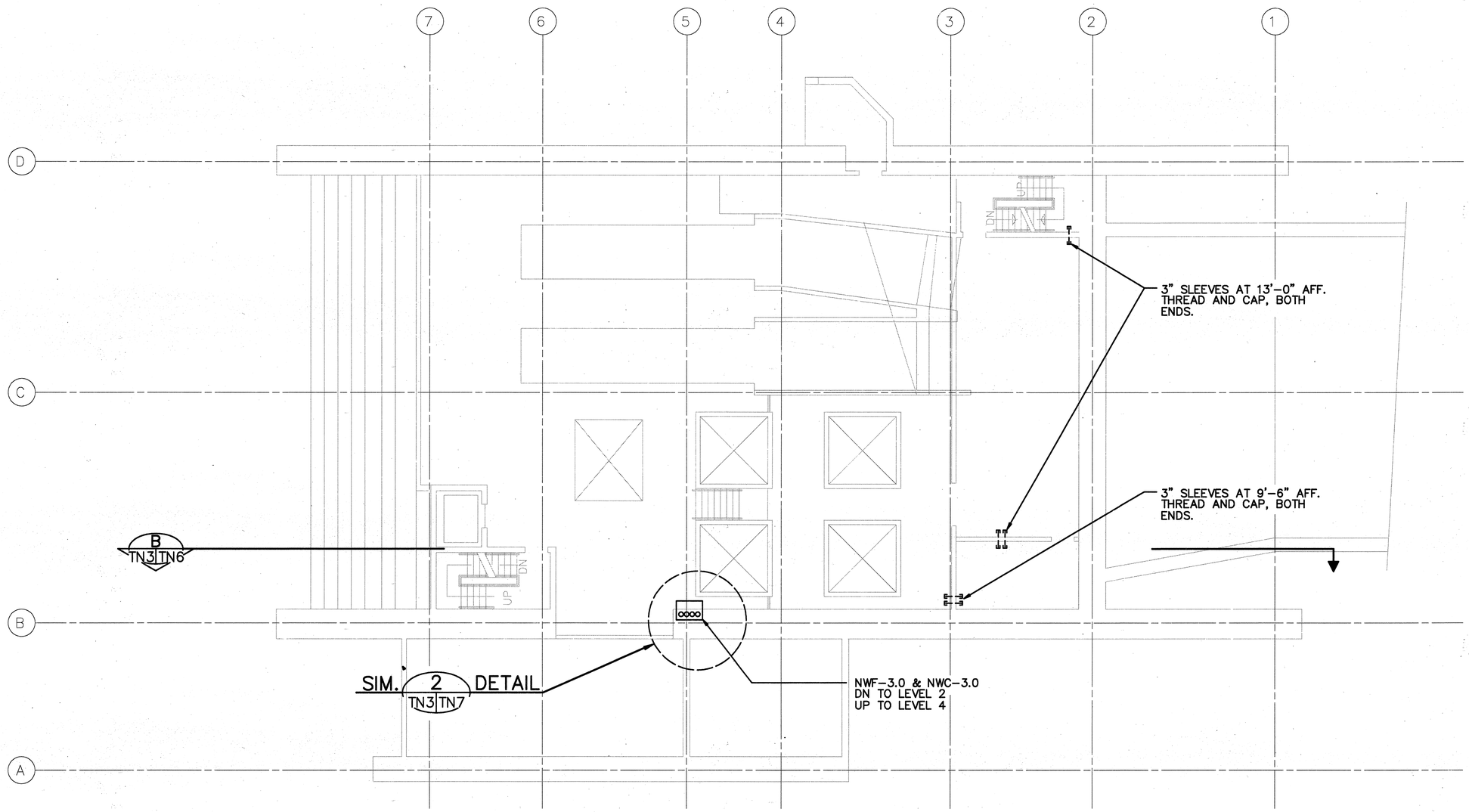

GRAPHIC SCALE:
8' 4' 0' 8' 16'
1/8" = 1'-0"

ORIGINAL PLAN	SURVEY PLOTTED BY: DATE
	DRAWN BY: CADD 06/27/90
	TRACED BY:
NOTEBOOK	DESIGNED BY: W.WILLIAMS 5/28/89
	QUANTITIES BY:
No.	CHECKED BY: H.SMITH 06/27/90

DATE	REVISION

STATE OF HAWAII
DEPARTMENT OF TRANSPORTATION
HIGHWAYS DIVISION

SYSTEMS CONDUIT
LEVEL 3 PLAN
HALAWA PORTAL BUILDING-IB

INTERSTATE ROUTE H-3
F.A.I. PROJ. NO. I-H3-1(64)

SCALE: 1/8" = 1'-0" DATE: JUN. 1990

SHEET NO. TN3 OF 8 SHEETS

STANLEY M. O. T. CHING
REGISTERED PROFESSIONAL ENGINEER
No. 6312-C
HAWAII, U.S.A.

THIS WORK WAS PREPARED BY ME OR UNDER MY SUPERVISION

Stanley M.O.T. Ching

H3SC-TN3-H3-C1 -06-27-90

FED. ROAD DIST. NO.	STATE	FED. AID PROJ. NO.	FISCAL YEAR	SHEET NO.	TOTAL SHEETS
HAWAII	HAW.	I-H3-(64)	1990	504	531

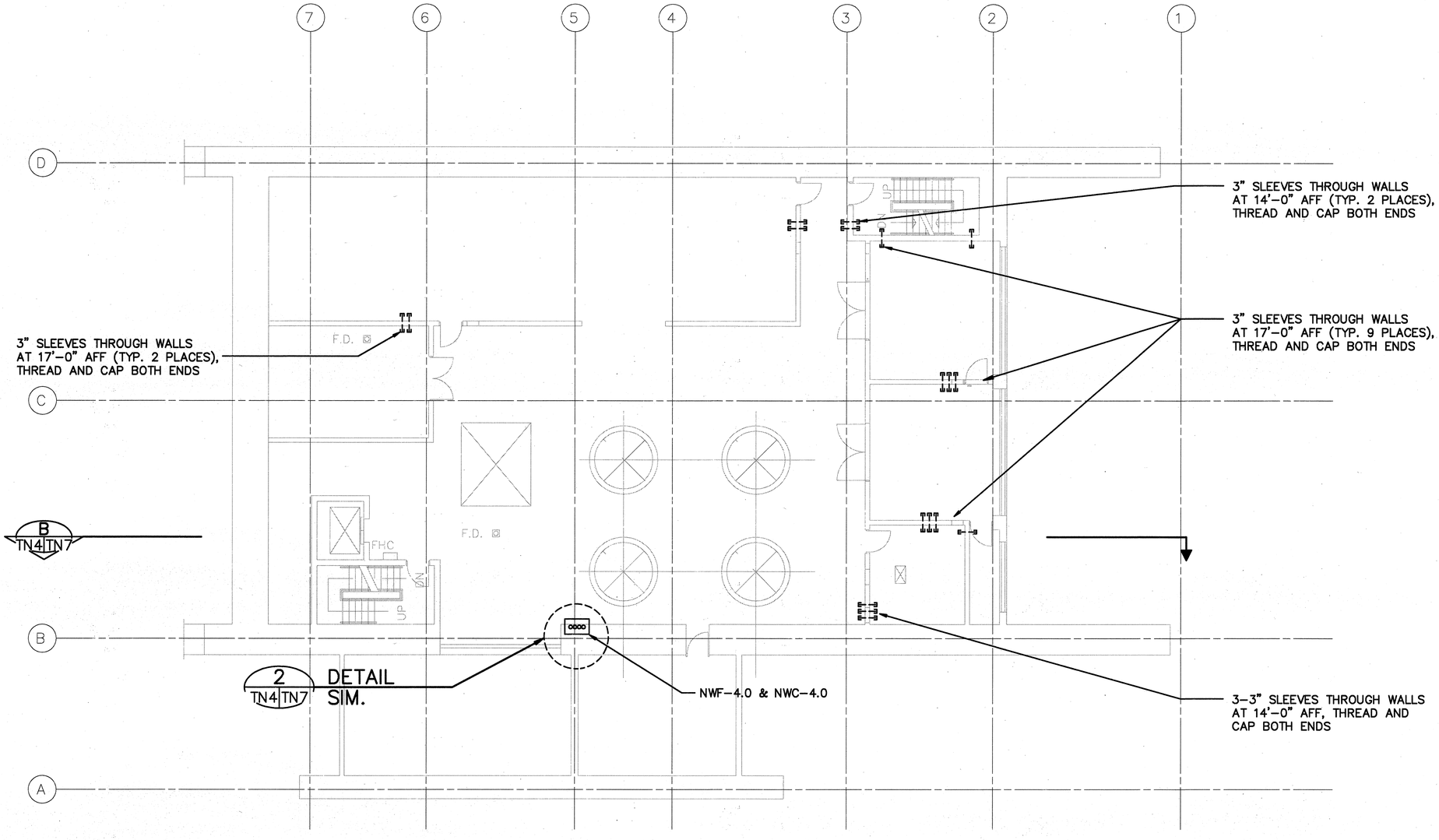

GRAPHIC SCALE:
8' 4' 0' 8' 16'
1/8" = 1'-0"

DATE	REVISION

STATE OF HAWAII
DEPARTMENT OF TRANSPORTATION
HIGHWAYS DIVISION

SYSTEMS CONDUIT LEVEL 4 PLAN

HALAWA PORTAL BUILDING-IB
INTERSTATE ROUTE H-3
F.A.I. PROJ. NO. I-H3-1(64)

SCALE: 1/8" = 1'-0" DATE: JUN. 1990

STANLEY M. O. T. CHING
REGISTERED PROFESSIONAL ENGINEER
No. 6312-C
HAWAII, U.S.A.

THIS WORK WAS PREPARED BY ME OR UNDER MY SUPERVISION
Stanley M.O.T. Ching

SHEET NO. TN4 OF 8 SHEETS

ORIGINAL PLAN		DATE
	SURVEY PLOTTED BY	
	DRAWN BY CADD	06/27/90
NOTEBOOK	TRACED BY	
	DESIGNED BY W.WILLIAMS	6/28/89
	QUANTITIES BY	
No.	CHECKED BY H.SMITH	06/27/90

H3SC-TN4-H3\C1 -06-27-90

FED. ROAD DIST. NO.	STATE	FED. AID PROJ. NO.	FISCAL YEAR	SHEET NO.	TOTAL SHEETS
HAWAII	HAW.	I-H3-1(64)	1990	505	531

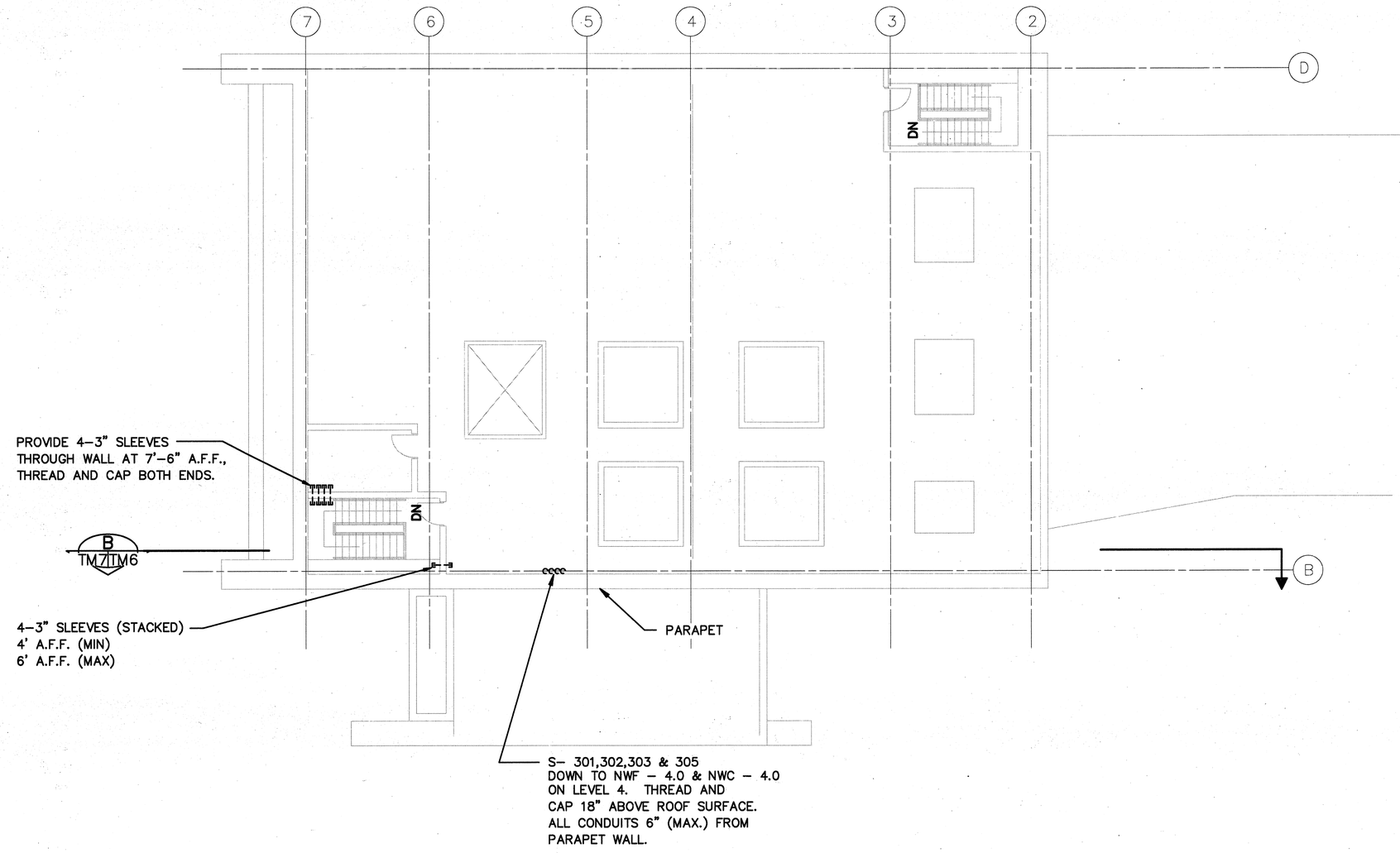

GRAPHIC SCALE:
8' 4' 0' 8' 16'
1/8" = 1'-0"

ORIGINAL PLAN	SURVEY PLOTTED BY	DATE
	DRAWN BY CADD	06/27/90
	TRACED BY	
	DESIGNED BY W.WILLIAMS	6/26/89
NOTEBOOK	QUANTITIES BY	
No.	CHECKED BY H.SMITH	06/27/90

DATE	REVISION

STATE OF HAWAII
DEPARTMENT OF TRANSPORTATION
HIGHWAYS DIVISION

SYSTEMS CONDUIT ROOF PLAN

HALAWA PORTAL BUILDING-IB

INTERSTATE ROUTE H-3
F.A.I. PROJ. NO. I-H3-1(64)

STANLEY M. O. T. CHING
REGISTERED PROFESSIONAL ENGINEER
No. 6312-C
HAWAII, U.S.A.

THIS WORK WAS PREPARED BY ME OR UNDER MY SUPERVISION
Stanley M.O.T. Ching

SCALE: 1/8" = 1'-0" DATE: JUN. 1990

SHEET NO. TN5 OF 8 SHEETS

H3SC-TN5-H3\C1 -06-27-90

FED. ROAD DIST. NO.	STATE	FED. AID PROJ. NO.	FISCAL YEAR	SHEET NO.	TOTAL SHEETS
HAWAII	HAW.	I-H3-1(64)	1990	506	531

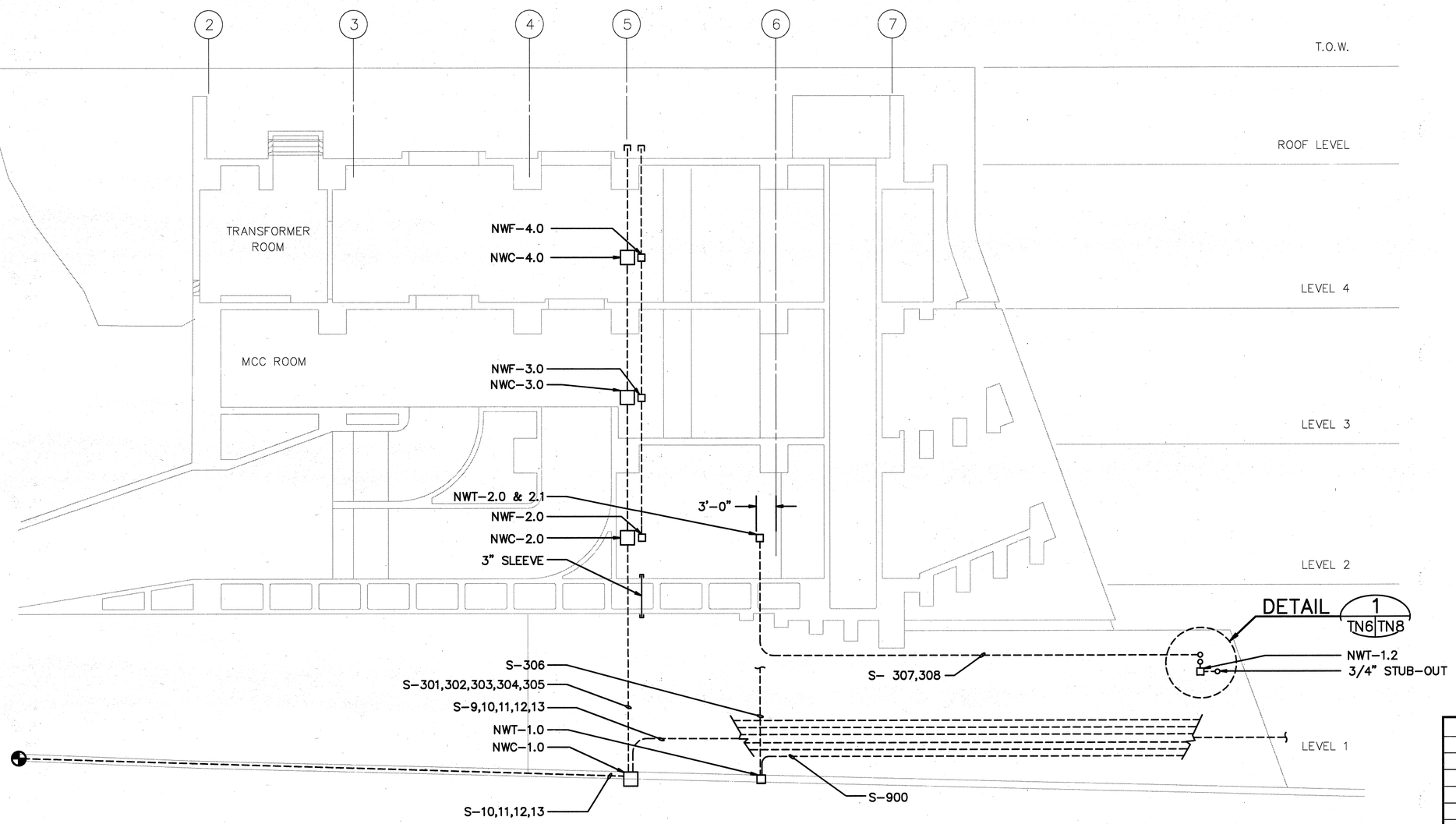

GRAPHIC SCALE:
8' 4' 0' 8' 16'
1/8" = 1'-0"

STANLEY M. O. T. CHING
REGISTERED PROFESSIONAL ENGINEER
No. 6312-C
HAWAII U.S.A.

THIS WORK WAS PREPARED BY ME OR UNDER MY SUPERVISION

Stanley M.O.T. Ching

DATE	REVISION

STATE OF HAWAII
DEPARTMENT OF TRANSPORTATION
HIGHWAYS DIVISION

SYSTEMS CONDUIT SECTION B

HALAWA PORTAL BUILDING-IB

INTERSTATE ROUTE H-3
F.A.I. PROJ. NO. I-H3-1(64)

SCALE: 1/8" = 1'-0" DATE: JUN. 1990

SHEET NO. TN6 OF 8 SHEETS

ORIGINAL PLAN		DATE
	SURVEY PLOTTED BY	
	DRAWN BY CADD	06/27/90
	TRACED BY	
NOTEBOOK	DESIGNED BY W.WILLIAMS	5/26/89
	QUANTITIES BY	
No.	CHECKED BY H.SMITH	06/27/90

H3SC-TN6-H3\C190 -06\27\90

FED. ROAD DIST. NO.	STATE	FED. AID PROJ. NO.	FISCAL YEAR	SHEET NO.	TOTAL SHEETS
HAWAII	HAW.	I-H3-1(64)	1990	507	531

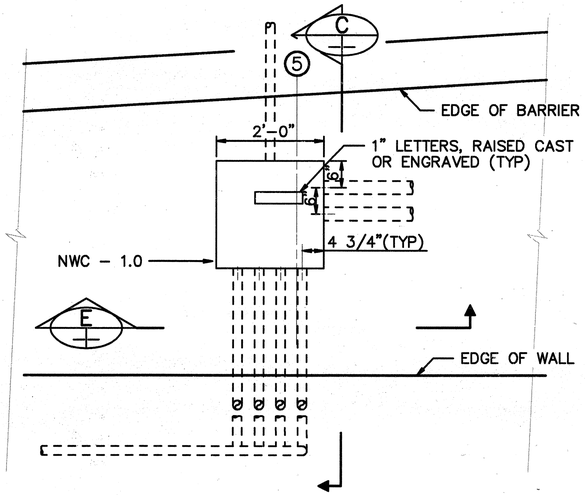

DETAIL 1 (TN1 TN7)
SCALE: 3/4"=1'-0"

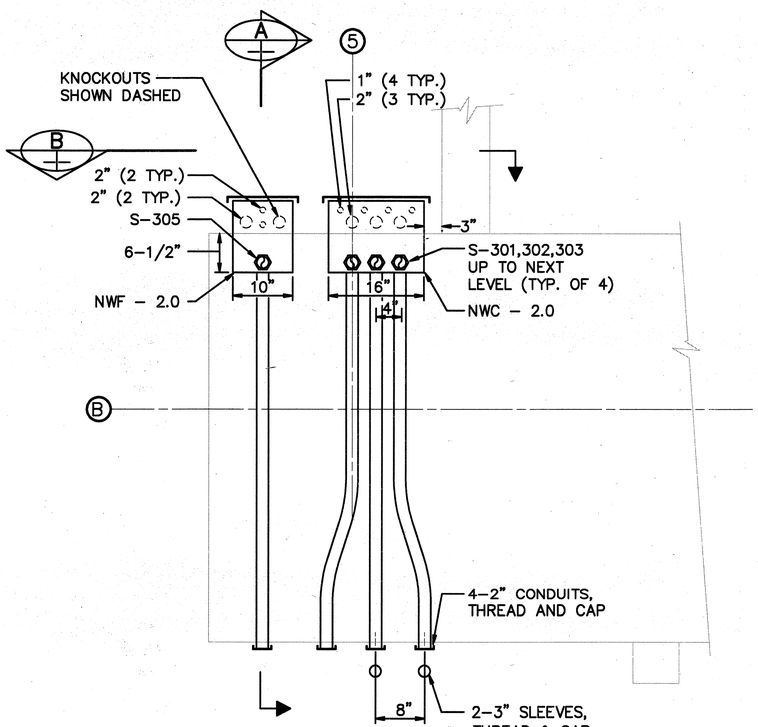

DETAIL 2 (TN4, TN3, TN2 TN7)
SCALE: 1" = 1'-0"

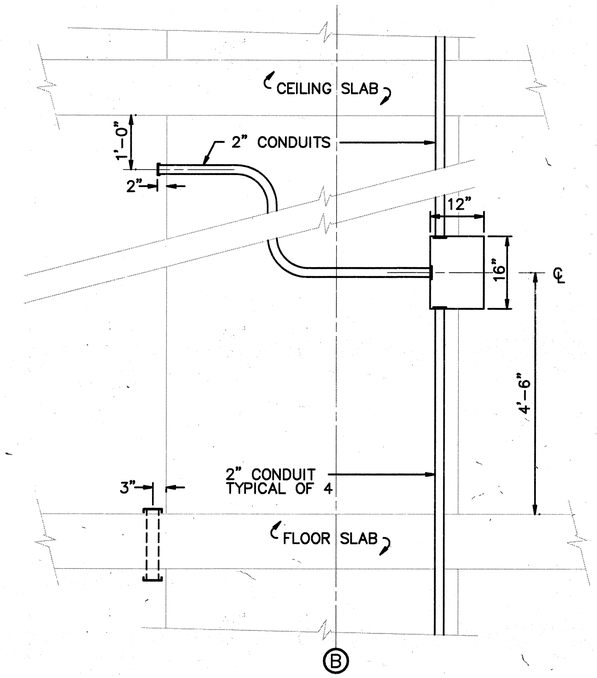

SECTION A
SCALE: 3/4"=1'-0"

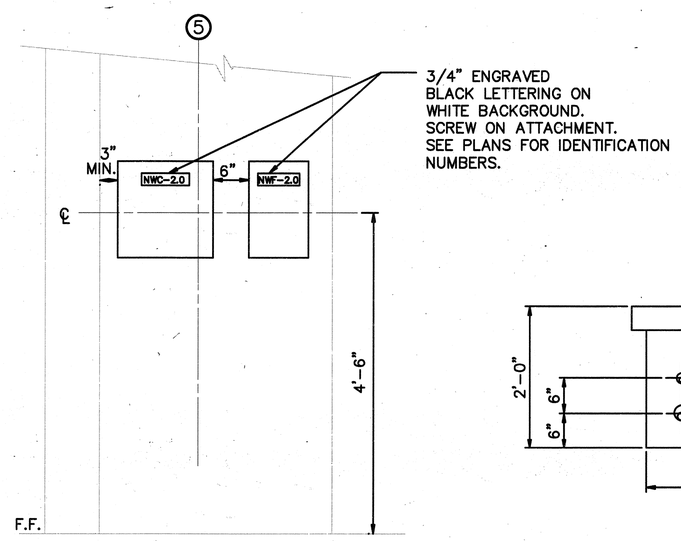

SECTION B
SCALE: 1" = 1'-0"

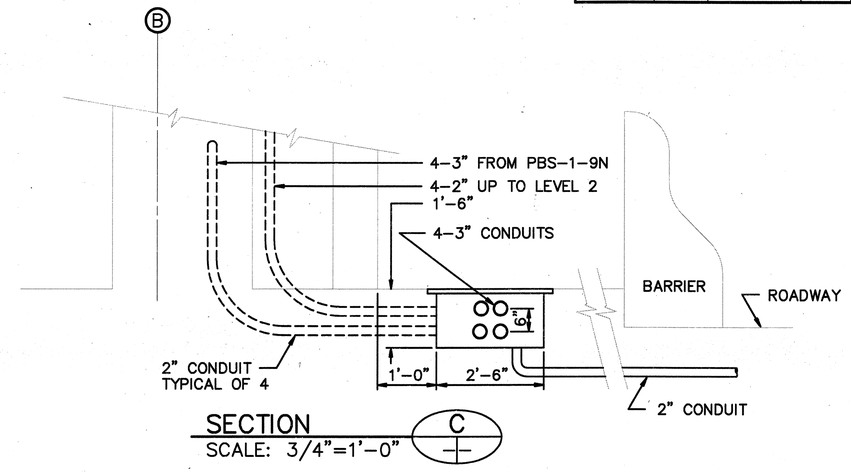

SECTION C
SCALE: 3/4"=1'-0"

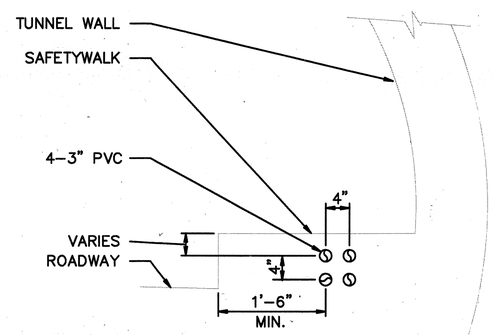

SECTION D (TN1 TN7)
SCALE: 1" = 1'-0"

GRAPHIC SCALE:
12" 0' 1" 2' 3'
3/4" = 1'-0"

GRAPHIC SCALE:
12" 0' 1' 2'
1" = 1'-0"

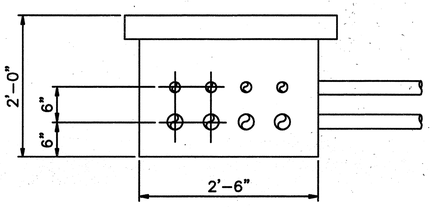

SECTION E
SCALE: 1" = 1'-0"

DATE	REVISION

STATE OF HAWAII
DEPARTMENT OF TRANSPORTATION
HIGHWAYS DIVISION

SYSTEMS CONDUIT SECTIONS & DETAILS-1

HALAWA PORTAL BUILDING-IB

INTERSTATE ROUTE H-3

F.A.I. PROJ. NO. I-H3-1(64)

SCALE: AS SHOWN DATE: JUN 1990

SHEET NO. TN7 OF 8 SHEETS

STANLEY M. O. T. CHING
REGISTERED PROFESSIONAL ENGINEER
No. 6312-C
HAWAII, U.S.A.

THIS WORK WAS PREPARED BY ME OR UNDER MY SUPERVISION
Stanley M. O. T. Ching

ORIGINAL PLAN		DATE
	SURVEY PLOTTED BY	
	DRAWN BY QADD	6/27/90
NOTEBOOK	TRACED BY	
	DESIGNED BY W.WILLIAMS	6/26/90
	QUANTITIES BY	
No.	CHECKED BY H.SMITH	6/27/90

H3SC-TN7-H3\C190 -06-27-90

FED. ROAD DIST. NO.	STATE	FED. AID PROJ. NO.	FISCAL YEAR	SHEET NO.	TOTAL SHEETS
HAWAII	HAW.	I-H3-1(64)	1990	508	531

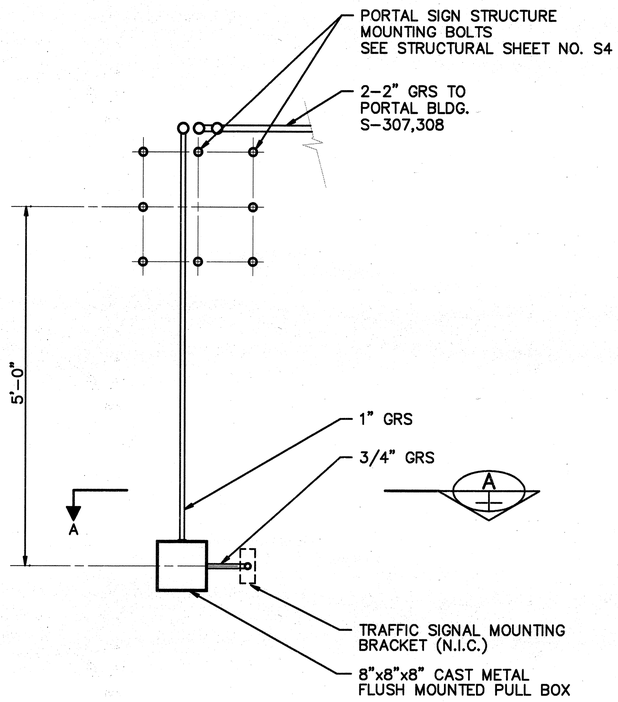

DETAIL 1
SCALE: 1"=1'-0" TN7 TN8

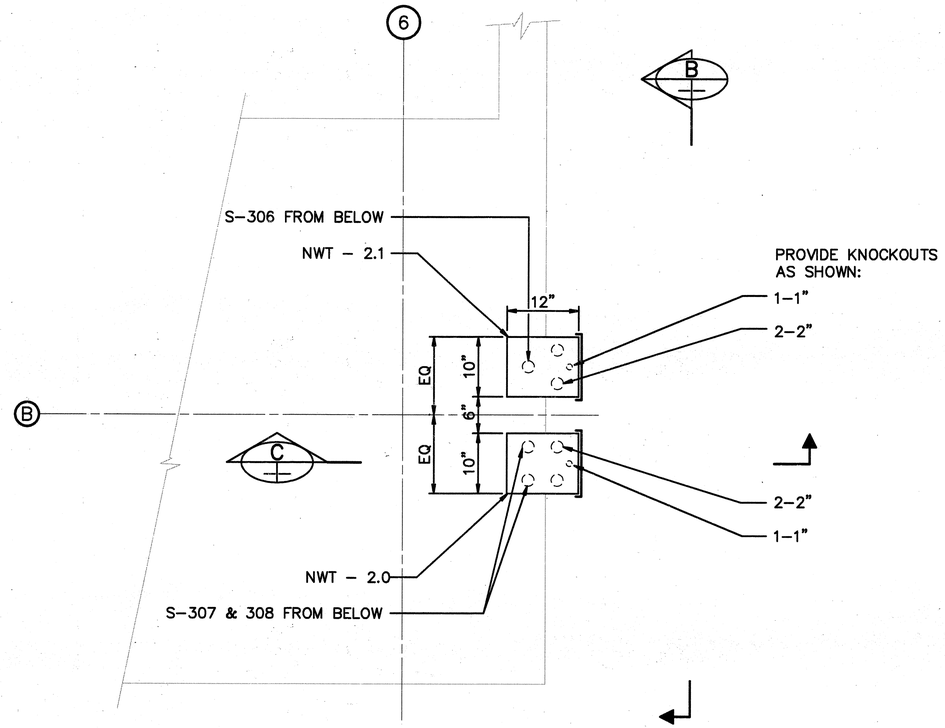

DETAIL 2
SCALE: 1"=1'-0" TN2 TN8

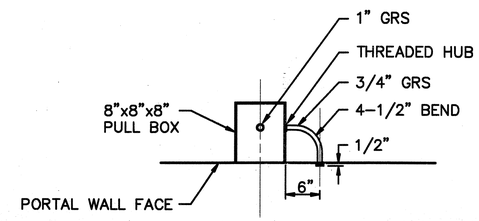

SECTION A
NTS

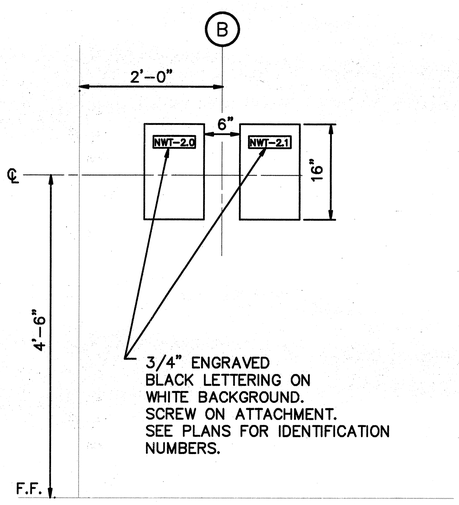

SECTION B
SCALE: 1"=1'-0" TN8

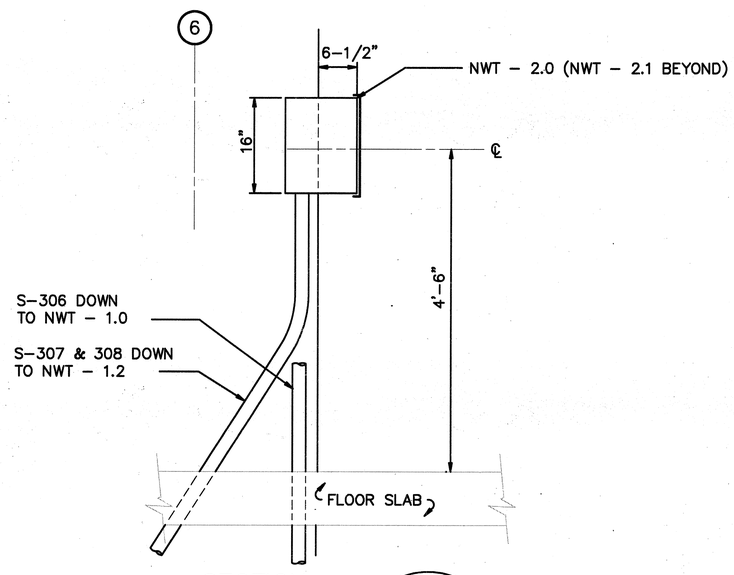

SECTION C
SCALE: 1"=1'-0"

GRAPHIC SCALE:
12" 0' 1' 2'
1" = 1'-0"

DATE	REVISION

STATE OF HAWAII
DEPARTMENT OF TRANSPORTATION
HIGHWAYS DIVISION

SYSTEMS CONDUIT SECTIONS & DETAILS-2

HALAWA PORTAL BUILDING-IB

INTERSTATE ROUTE H-3

F.A.I. PROJ. NO. I-H3-1(64)

STANLEY M. O. T. CHING
REGISTERED PROFESSIONAL ENGINEER
No. 6312-C
HAWAII, U.S.A.

THIS WORK WAS PREPARED BY ME OR UNDER MY SUPERVISION

Stanley M.O.T. Ching

SCALE: 1" = 1'-0" DATE: JUN. 1990

SHEET NO. TN8 OF 8 SHEETS

ORIGINAL PLAN | SURVEY PLOTTED BY: F.GO. DATE: 06/27/90 | TRACED BY: S. ARAKAKI DATE: 8/28/90 | DESIGNED BY: N. WILLIAMS DATE: 06/27/90 | QUANTITIES BY: | CHECKED BY: S. SMITH | NOTEBOOK No.

H3SC-TN8-H3\C190 -06-27-90

FED. ROAD DIST. NO.	STATE	FED. AID PROJ. NO.	FISCAL YEAR	SHEET NO.	TOTAL SHEETS
HAWAII	HAW.	I-H3-1(64)	1990	509	531

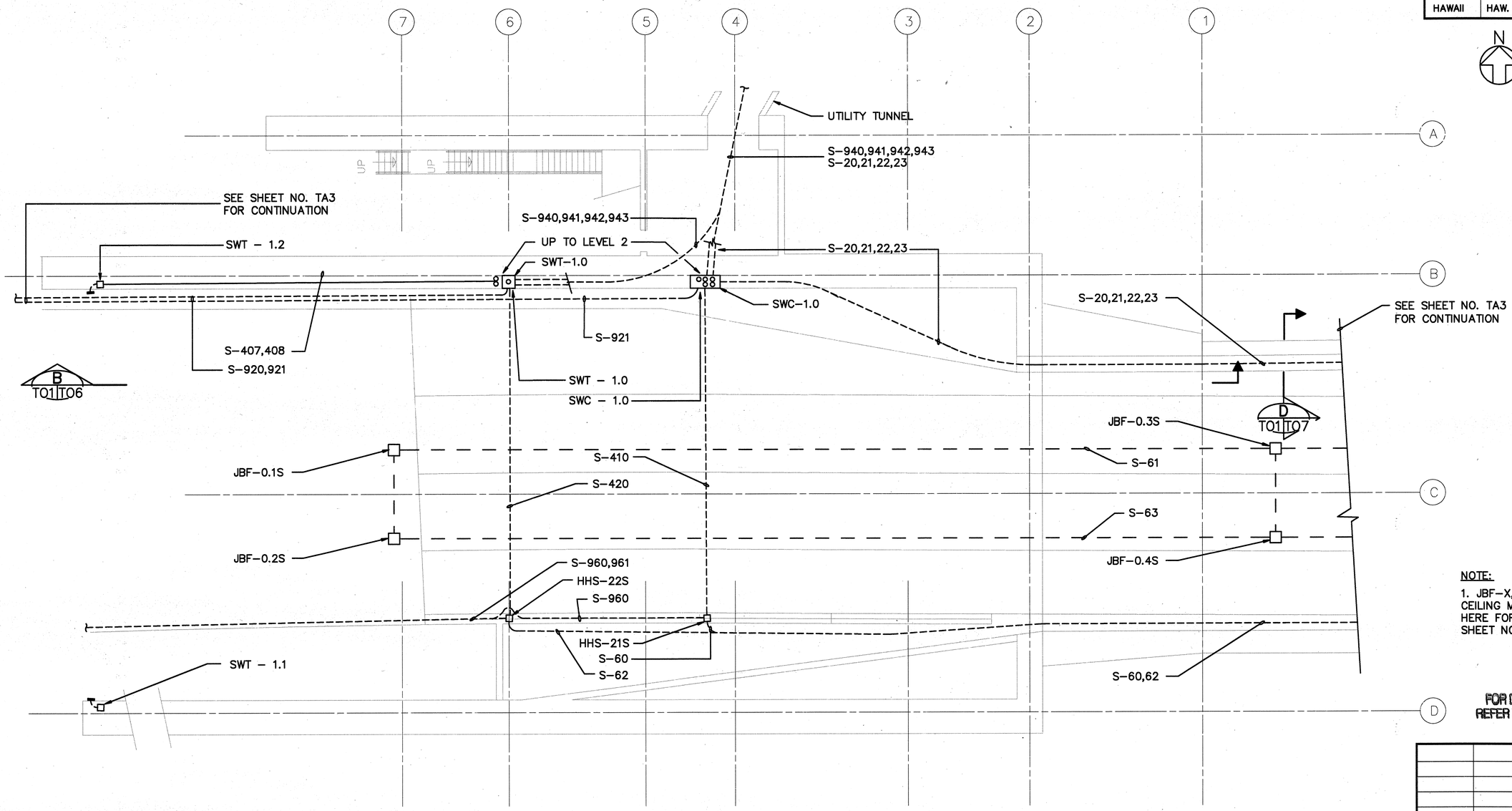

NOTE:

1. JBF-X,Y,Z PULLBOXES ARE CEILING MOUNTED AND SHOWN HERE FOR CONTINUITY. SEE SHEET NO. TT9.

FOR DETAIL AS-BUILT INFORMATION REFER TO CONSTRUCTION SUBMITTALS

ORIGINAL PLAN		DATE
	SURVEY PLOTTED BY	
	DRAWN BY CADD	06/27/90
	TRACED BY	
NOTEBOOK	DESIGNED BY W.WILLIAMS	5/29/89
	QUANTITIES BY	
No.	CHECKED BY H.SMITH	06/27/90

GRAPHIC SCALE:

8' 4' 0' 8' 16'

1/8" = 1'-0"

STANLEY M. O. T. CHING
REGISTERED PROFESSIONAL ENGINEER
No. 6312-C
HAWAII, U.S.A.

THIS WORK WAS PREPARED BY ME OR UNDER MY SUPERVISION

Stanley M. O. T. Ching

DATE	REVISION

STATE OF HAWAII
DEPARTMENT OF TRANSPORTATION
HIGHWAYS DIVISION

SYSTEMS CONDUIT LEVEL 1 PLAN

HALAWA PORTAL BUILDING-OB

INTERSTATE ROUTE H-3

F.A.I. PROJ. NO. I-H3-1(64)

SCALE: 1/8" = 1'-0" DATE: JUN. 1990

SHEET NO. T01 OF 8 SHEETS

H3SC-T01-H3\C1 -06-27-90

FED. ROAD DIST. NO.	STATE	FED. AID PROJ. NO.	FISCAL YEAR	SHEET NO.	TOTAL SHEETS
HAWAII	HAW.	I-H3-1(64)	1990	510	531

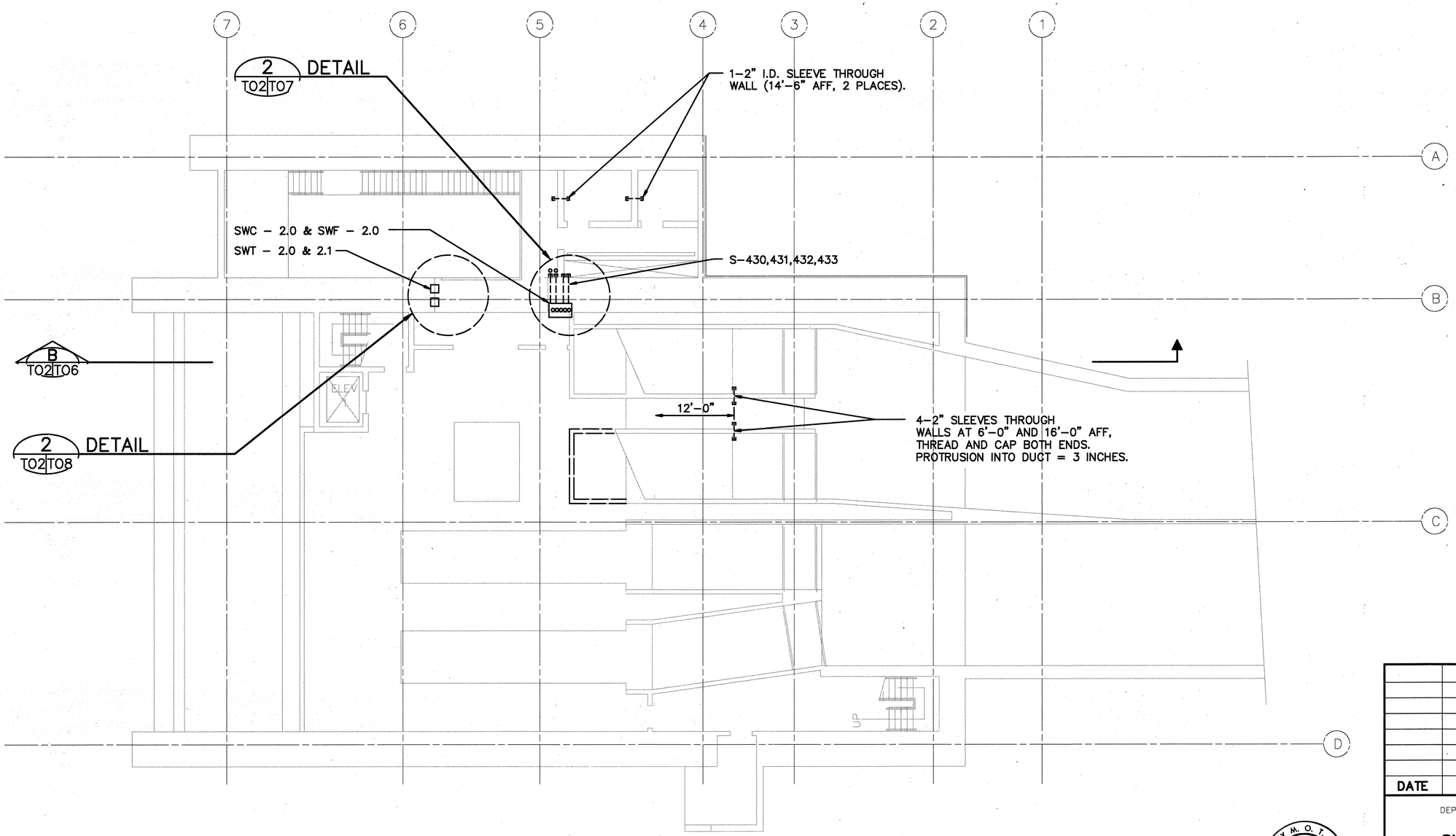

GRAPHIC SCALE:
8' 4' 0' 8' 16'
1/8" = 1'-0"

STANLEY M. O. T. CHING
REGISTERED PROFESSIONAL ENGINEER
No. 6312-C
HAWAII, U.S.A.

THIS WORK WAS PREPARED BY ME OR UNDER MY SUPERVISION

Stanley M.O.T. Ching

DATE	REVISION

STATE OF HAWAII
DEPARTMENT OF TRANSPORTATION
HIGHWAYS DIVISION

SYSTEMS CONDUIT LEVEL 2 PLAN

HALAWA PORTAL BUILDING-OB

INTERSTATE ROUTE H-3

F.A.I. PROJ. NO. I-H3-1(64)

SCALE: 1/8" = 1'-0" DATE: JUN. 1990

SHEET NO. T02 OF 8 SHEETS

ORIGINAL PLAN		
	SURVEY PLOTTED BY	DATE
	DRAWN BY CADD	06/27/90
	TRACED BY	
NOTEBOOK	DESIGNED BY W.WILLIAMS	6/28/89
	QUANTITIES BY	
No.	CHECKED BY H.SMITH	06/27/90

H3SC-T02-H3\C1 -06-27-90

FED. ROAD DIST. NO.	STATE	FED. AID PROJ. NO.	FISCAL YEAR	SHEET NO.	TOTAL SHEETS
HAWAII	HAW.	I-H3-1(64)	1990	511	531

N

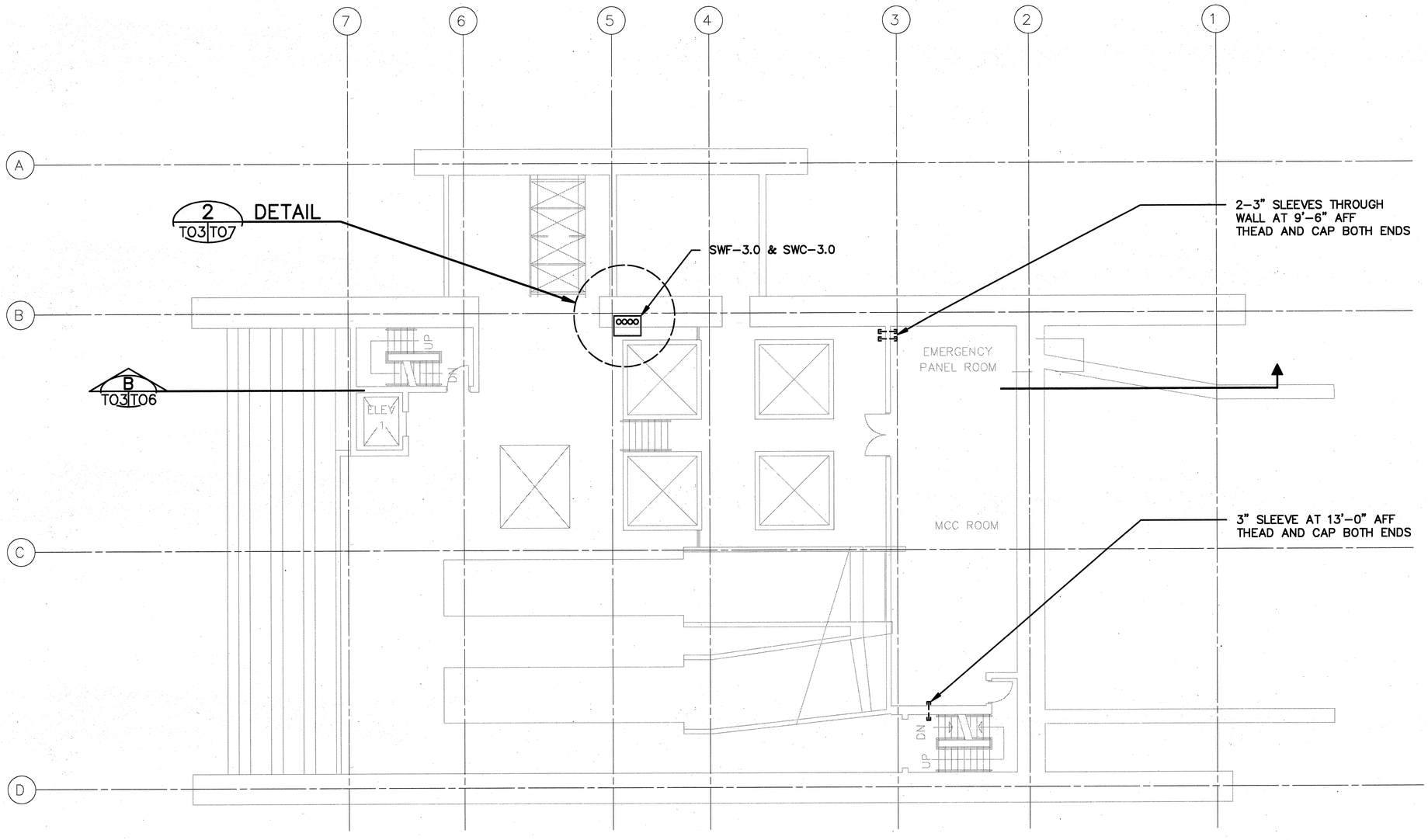

GRAPHIC SCALE:
8' 4' 0' 8' 16'
1/8" = 1'-0"

ORIGINAL PLAN	SURVEY PLOTTED BY ____ DATE 06/27/90
	DRAWN BY CADD
	TRACED BY
NOTEBOOK	DESIGNED BY W.WILLIAMS 5/30/89
	QUANTITIES BY
No.	CHECKED BY H.SMITH 06/27/90

THIS WORK WAS PREPARED BY ME OR UNDER MY SUPERVISION

Stanley M.O.T. Ching

STANLEY M. O. T. CHING
REGISTERED PROFESSIONAL ENGINEER
No. 6312-C
HAWAII, U.S.A.

DATE	REVISION

STATE OF HAWAII
DEPARTMENT OF TRANSPORTATION
HIGHWAYS DIVISION

SYSTEMS CONDUIT LEVEL 3 PLAN

HALAWA PORTAL BUILDING-OB

INTERSTATE ROUTE H-3

F.A.I. PROJ. NO. I-H3-1(64)

SCALE: 1/8" = 1'-0" DATE: JUN. 1990

SHEET NO. T03 OF 8 SHEETS

H3SC-T03-H3\C1 -06-27-90

FED. ROAD DIST. NO.	STATE	FED. AID PROJ. NO.	FISCAL YEAR	SHEET NO.	TOTAL SHEETS
HAWAII	HAW.	I-H3-1(64)	1990	512	531

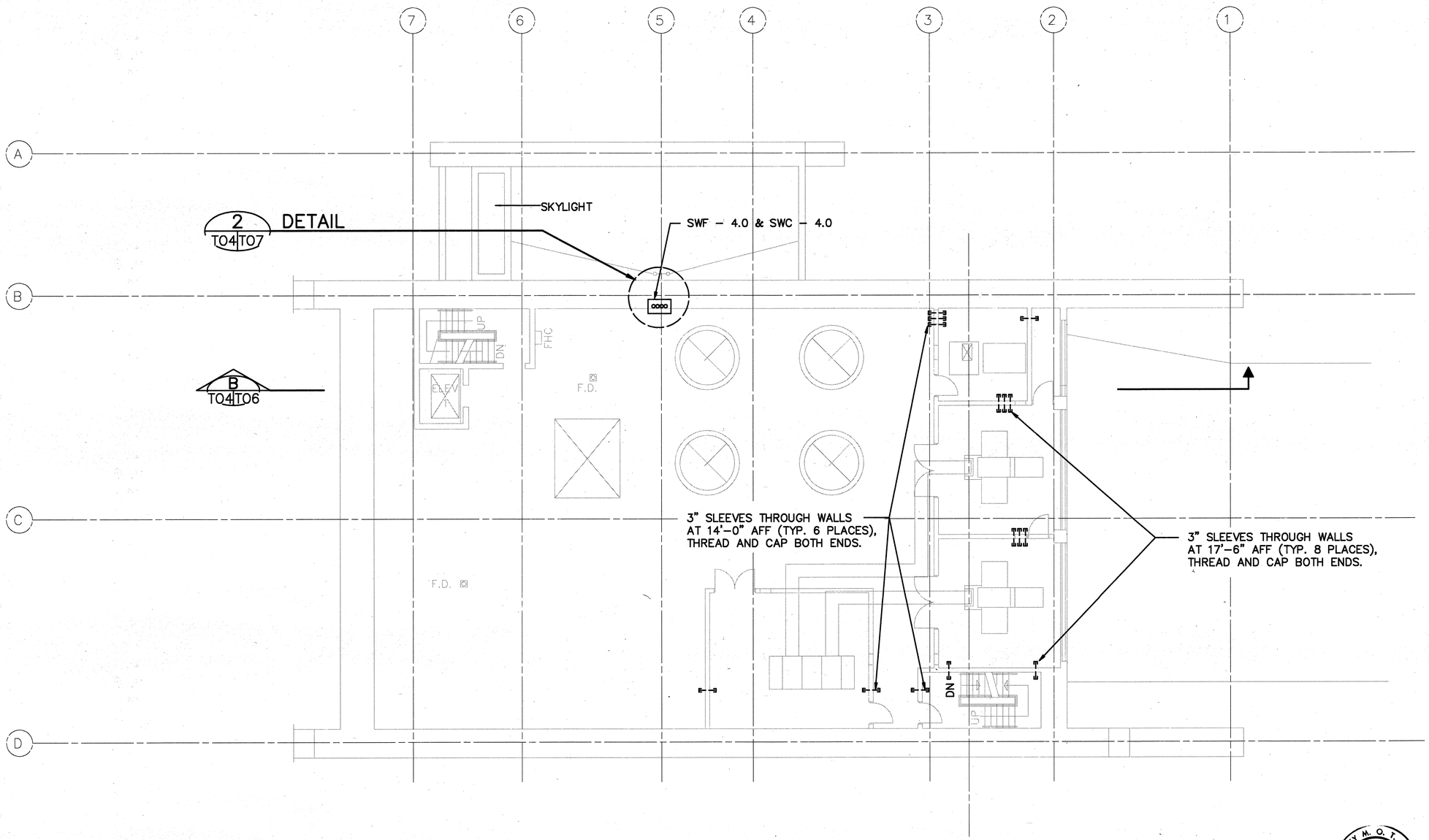

GRAPHIC SCALE:
8' 4' 0' 8' 16'
1/8" = 1'-0"

STANLEY M. O. T. CHING
REGISTERED PROFESSIONAL ENGINEER
No. 6312-C
HAWAII, U.S.A.

THIS WORK WAS PREPARED BY ME OR UNDER MY SUPERVISION

Stanley M. O. T. Ching

DATE	REVISION

STATE OF HAWAII
DEPARTMENT OF TRANSPORTATION
HIGHWAYS DIVISION

SYSTEMS CONDUIT LEVEL 4 PLAN

HALAWA PORTAL BUILDING–OB

INTERSTATE ROUTE H–3

F.A.I. PROJ. NO. I–H3–1(64)

SCALE: 1/8" = 1'-0" DATE: JUN. 1990

SHEET NO. T04 OF 8 SHEETS

		DATE
ORIGINAL PLAN	SURVEY PLOTTED BY	
	DRAWN BY CADD	06/27/90
	TRACED BY	
NOTEBOOK	DESIGNED BY W.WILLIAMS	6/28/89
	QUANTITIES BY	
No.	CHECKED BY H.SMITH	06/27/90

H3SC-T04-H3\C1 -06-27-90

512

FED. ROAD DIST. NO.	STATE	FED. AID PROJ. NO.	FISCAL YEAR	SHEET NO.	TOTAL SHEETS
HAWAII	HAW.	I-H3-1(64)	1990	513	531

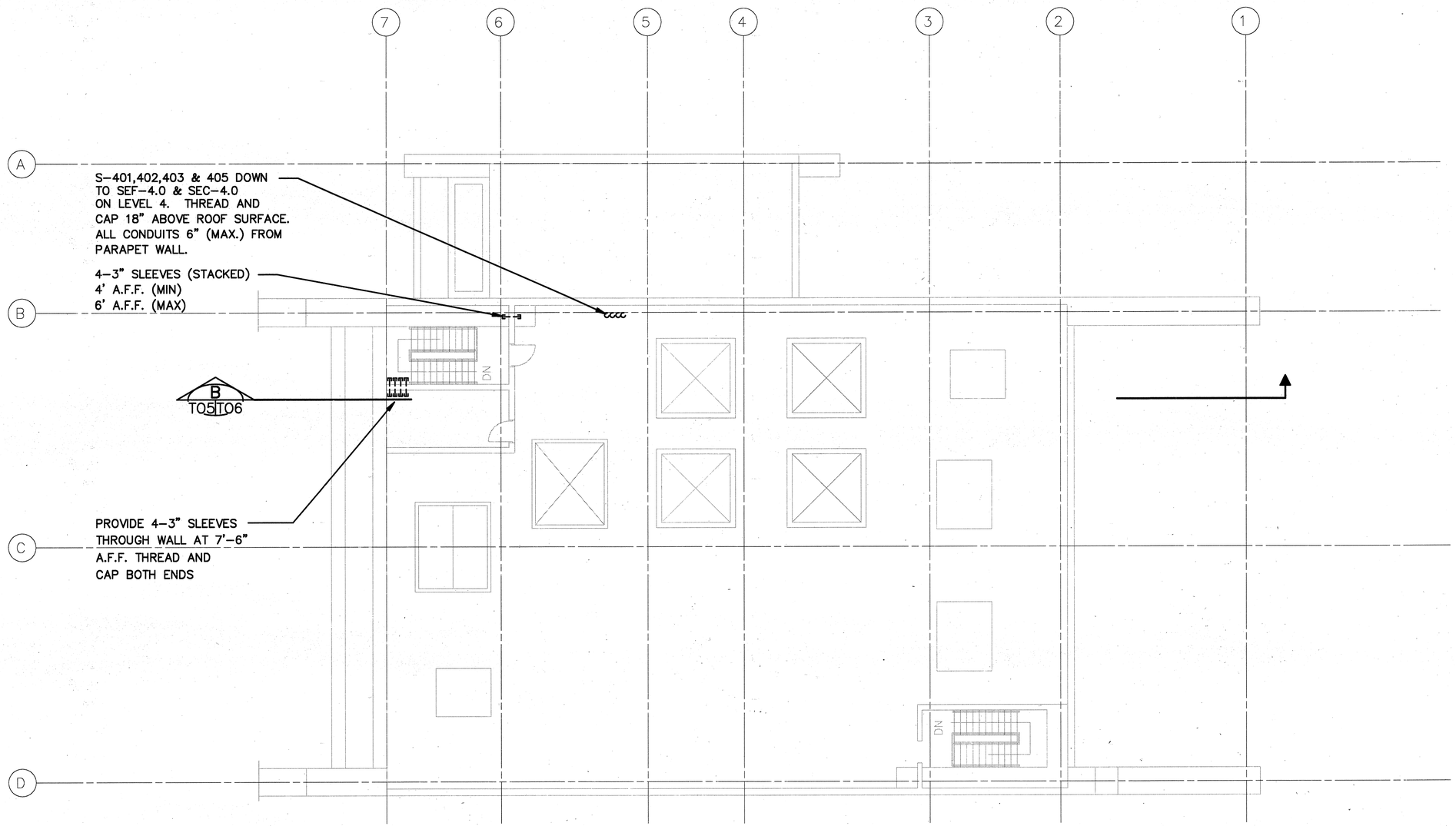

GRAPHIC SCALE:
8' 4' 0' 8' 16'
1/8" = 1'-0"

STANLEY M. O. T. CHING
REGISTERED PROFESSIONAL ENGINEER
No. 6312-C
HAWAII, U.S.A.

THIS WORK WAS PREPARED BY ME OR UNDER MY SUPERVISION
Stanley M. O. T. Ching

DATE	REVISION

STATE OF HAWAII
DEPARTMENT OF TRANSPORTATION
HIGHWAYS DIVISION

SYSTEMS CONDUIT ROOF PLAN

HALAWA PORTAL BUILDING-OB

INTERSTATE ROUTE H-3
F.A.I. PROJ. NO. I-H3-1(64)

SCALE: 1/8" = 1'-0" DATE: JUN. 1990

SHEET NO. T05 OF 8 SHEETS

ORIGINAL PLAN		DATE
	SURVEY PLOTTED BY	
	DRAWN BY CADD	06/27/90
	TRACED BY	
	DESIGNED BY W.WILLIAMS	5/26/89
NOTEBOOK	QUANTITIES BY	
	CHECKED BY H.SMITH	06/27/90
No.		

H3SC-T05-H3\C1 -06-27-90

FED. ROAD DIST. NO.	STATE	FED. AID PROJ. NO.	FISCAL YEAR	SHEET NO.	TOTAL SHEETS
HAWAII	HAW.	I-H3-1(64)	1990	514	531

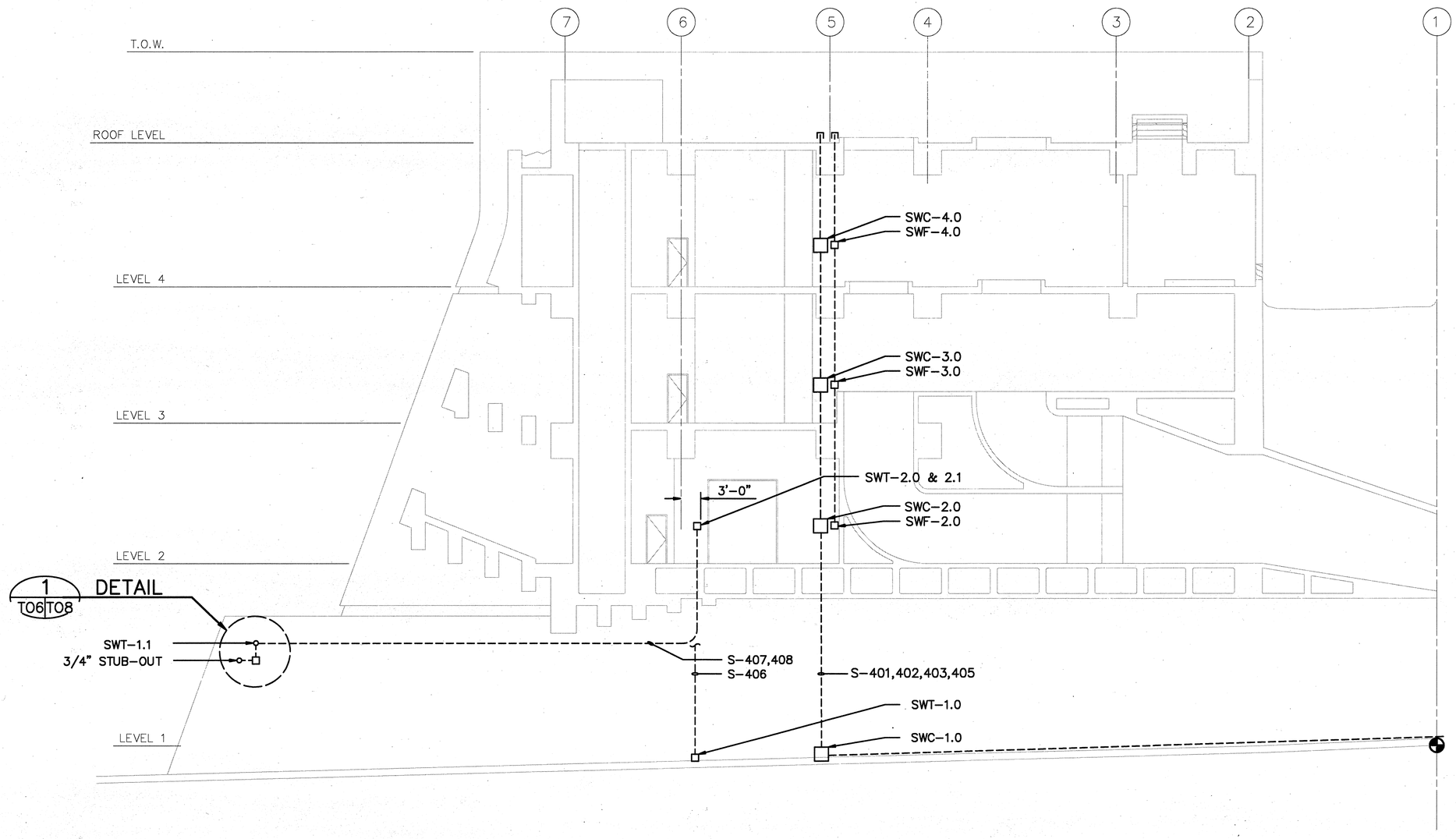

GRAPHIC SCALE:
8' 4' 0' 8' 16'
1/8" = 1'-0"

ORIGINAL PLAN		DATE
	SURVEY PLOTTED BY	
	DRAWN BY CADD	06/27/90
	TRACED BY	
	DESIGNED BY W.WILLIAMS	6/26/89
NOTEBOOK	QUANTITIES	
	CHECKED BY H.SMITH	06/27/90
No.		

DATE	REVISION

STATE OF HAWAII
DEPARTMENT OF TRANSPORTATION
HIGHWAYS DIVISION

SYSTEMS CONDUIT SECTION B

HALAWA PORTAL BUILDING-OB

INTERSTATE ROUTE H-3

F.A.I. PROJ. NO. I-H3-1(64)

SCALE: 1/8" = 1'-0" DATE: JUN. 1990

SHEET NO. T06 OF 8 SHEETS

STANLEY M. O. T. CHING
REGISTERED PROFESSIONAL ENGINEER
No. 6312-C
HAWAII, U.S.A.

THIS WORK WAS PREPARED BY ME OR UNDER MY SUPERVISION

Stanley M.O.T. Ching

H3SC-T06-H3\C1 -06-27-90

FED. ROAD DIST. NO.	STATE	FED. AID PROJ. NO.	FISCAL YEAR	SHEET NO.	TOTAL SHEETS
HAWAII	HAW.	I-H3-1(64)	1990	515	531

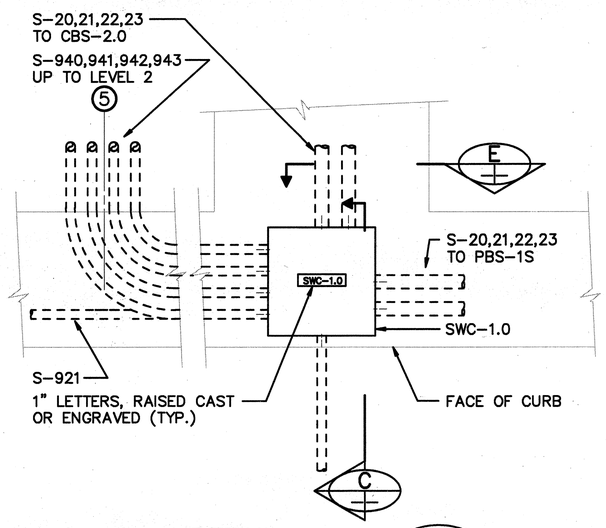

DETAIL 1
SCALE : 3/4"=1'-0" T01T07

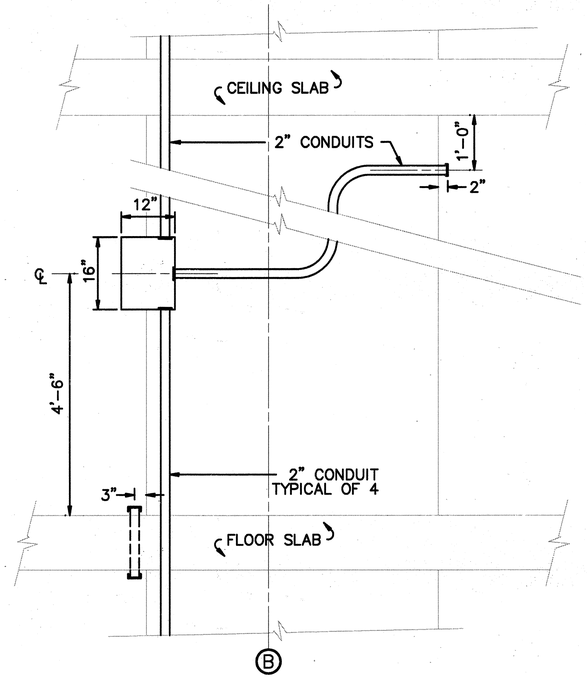

SECTION A
SCALE : 3/4"=1'-0"

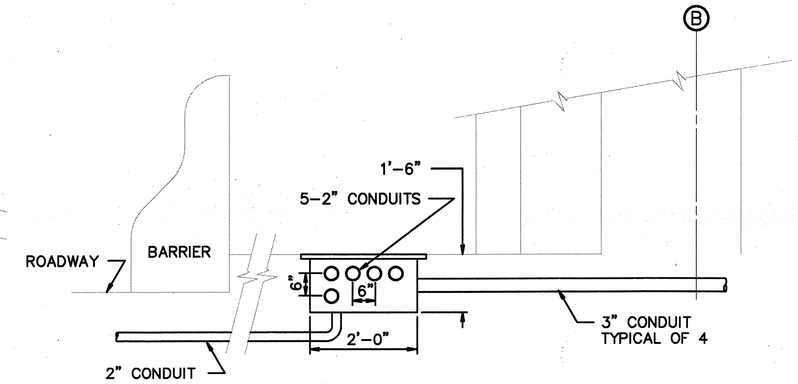

SECTION C
SCALE : 3/4"=1'-0"

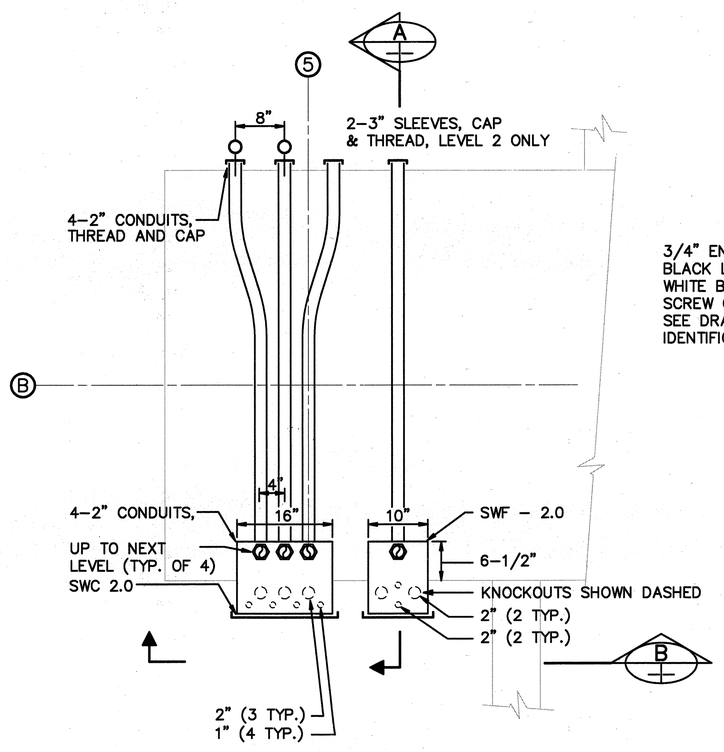

DETAIL 2
SCALE : 1"=1'-0" T02,T03,T04T07

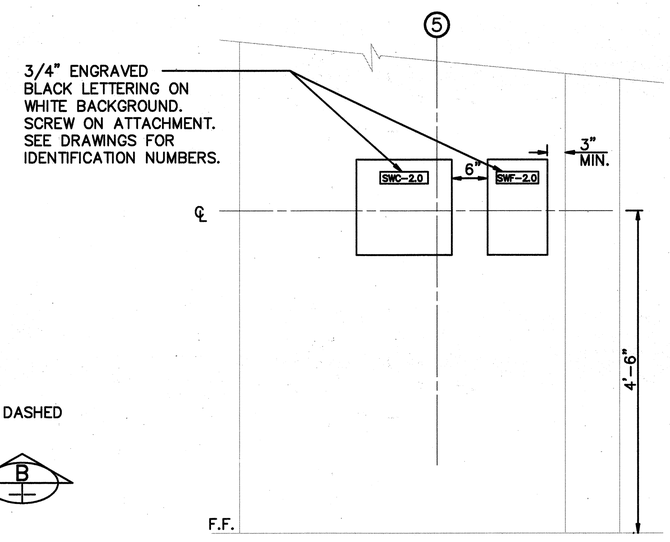

SECTION B
SCALE : 1"=1'-0"

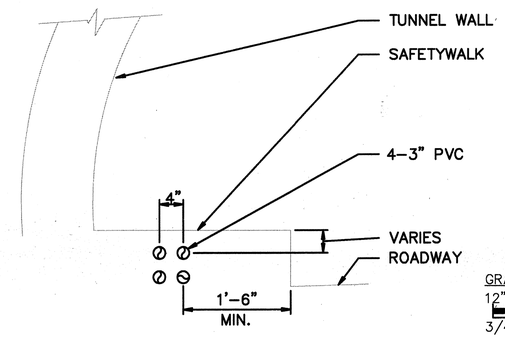

SECTION D
SCALE : 1" = 1'-0" T01T07

GRAPHIC SCALE:
12" 0' 1" 2' 3'
3/4" = 1'-0"

GRAPHIC SCALE:
12" 0' 1' 2'
1" = 1'-0"

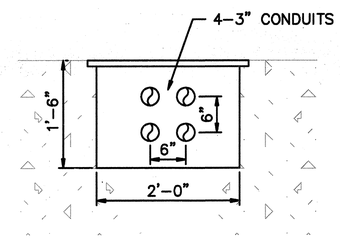

SECTION E
SCALE : 1"=1'-0"

STANLEY M. O. T. CHING
REGISTERED PROFESSIONAL ENGINEER
No. 6312-C
HAWAII, U.S.A.

THIS WORK WAS PREPARED BY ME OR UNDER MY SUPERVISION

Stanley M.O.T. Ching

DATE	REVISION

STATE OF HAWAII
DEPARTMENT OF TRANSPORTATION
HIGHWAYS DIVISION

SYSTEMS CONDUIT SECTIONS & DETAILS-1

HALAWA PORTAL BUILDING-OB

INTERSTATE ROUTE H-3

F.A.I. PROJ. NO. I-H3-1(64)

SCALE: AS SHOWN DATE: JUN. 1990

SHEET NO. T07 OF 8 SHEETS

ORIGINAL PLAN		DATE
	SURVEY PLOTTED BY	
	DRAWN BY CADD	06/27/90
	TRACED BY	
NOTEBOOK	DESIGNED BY W.WILLIAMS	6/28/89
	QUANTITIES BY	
No.	CHECKED BY H.SMITH	06/27/90

H3SC-T07-H3\C1 -06-27-90

FED. ROAD DIST. NO.	STATE	FED. AID PROJ. NO.	FISCAL YEAR	SHEET NO.	TOTAL SHEETS
HAWAII	HAW.	I-H3-1(64)	1990	516	531

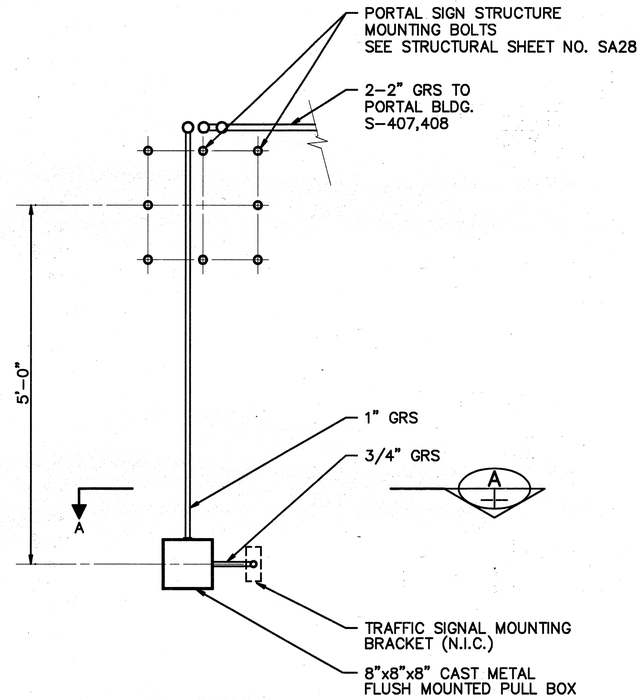

DETAIL 1 (T06 T08)
SCALE: 1"=1'-0"

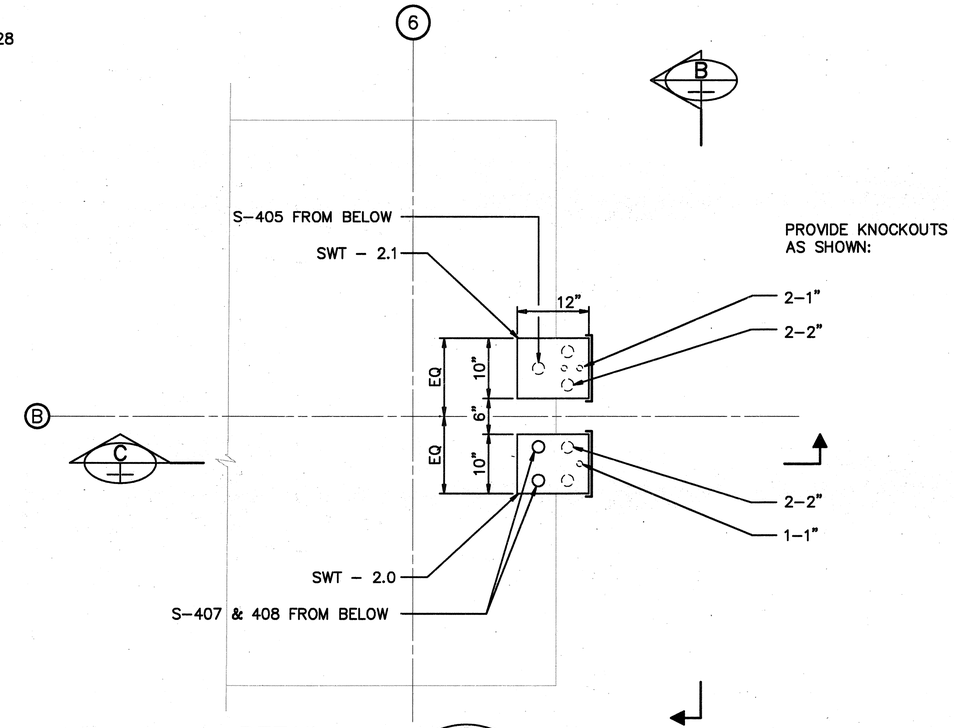

DETAIL 2 (T02 T08)
SCALE: 1"=1'-0"

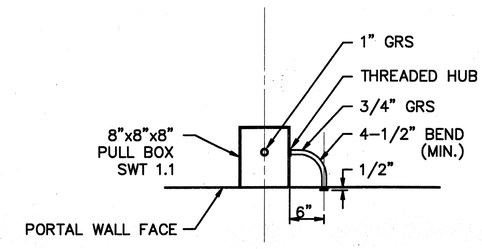

SECTION A
SCALE: NTS

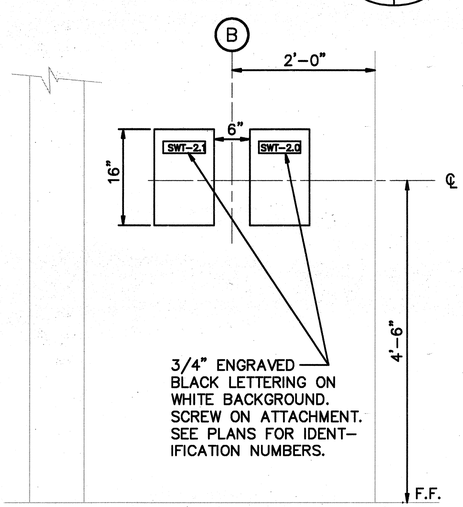

SECTION B
SCALE: 1"=1'-0"

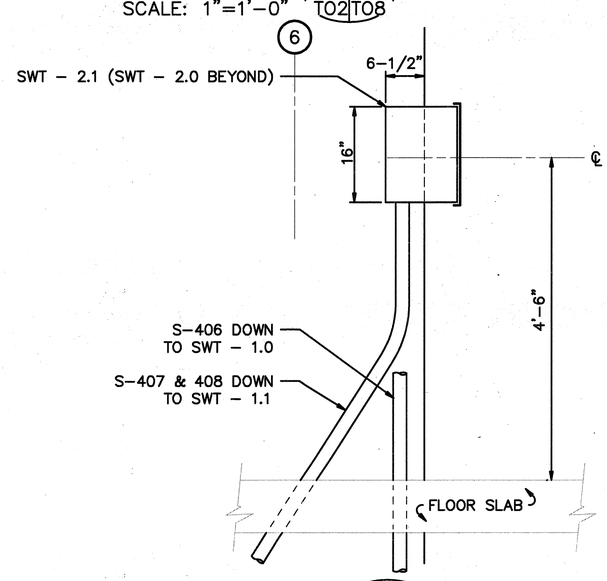

SECTION C
SCALE: 1"=1'-0"

GRAPHIC SCALE:
12" 0' 1' 2'
1" = 1'-0"

DATE	REVISION

STATE OF HAWAII
DEPARTMENT OF TRANSPORTATION
HIGHWAYS DIVISION

SYSTEMS CONDUIT SECTIONS & DETAILS-2

HALAWA PORTAL BUILDING-OB

INTERSTATE ROUTE H-3

F.A.I. PROJ. NO. I-H3-1(64)

SCALE: AS SHOWN DATE: JUN. 1990

STANLEY M. O. T. CHING
REGISTERED PROFESSIONAL ENGINEER
No. 6312-C
HAWAII, U.S.A.

THIS WORK WAS PREPARED BY ME OR UNDER MY SUPERVISION

Stanley M.O.T. Ching

ORIGINAL PLAN		DATE
	SURVEY PLOTTED BY:	
	DRAWN BY: CADD	11/9/89
	TRACED BY:	
	DESIGNED BY: W.WILLIAMS	6/26/89
NOTEBOOK	QUANTITIES BY:	
	CHECKED BY: H.SMITH	11/10/89
No.		

H3SC-T08-H3\C190 -06-27-90

SHEET NO. T08 OF 8 SHEETS

FED. ROAD DIST. NO.	STATE	FED. AID PROJ. NO.	FISCAL YEAR	SHEET NO.	TOTAL SHEETS
HAWAII	HAW.	I-H3-1(64)	1990	517	531

SYMBOL	CONDUIT NO.
A	09
B	10
C	11
D	12
E	13
F	926
G	927
H	931
I	939
J	938

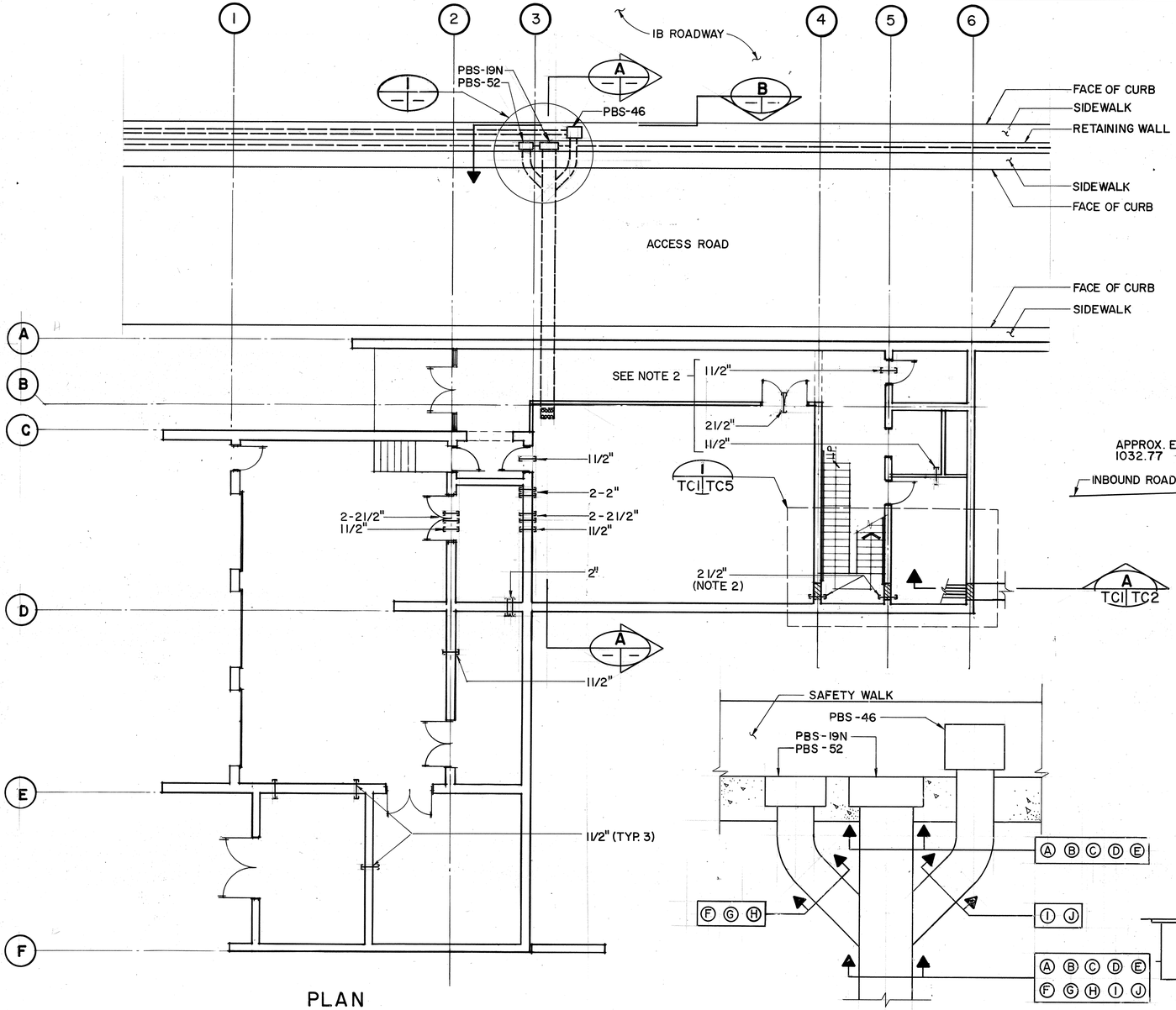

PLAN

SCALE: 1/8" = 1'-0"

DETAIL 1

SCALE: 1/2" = 1'-0"

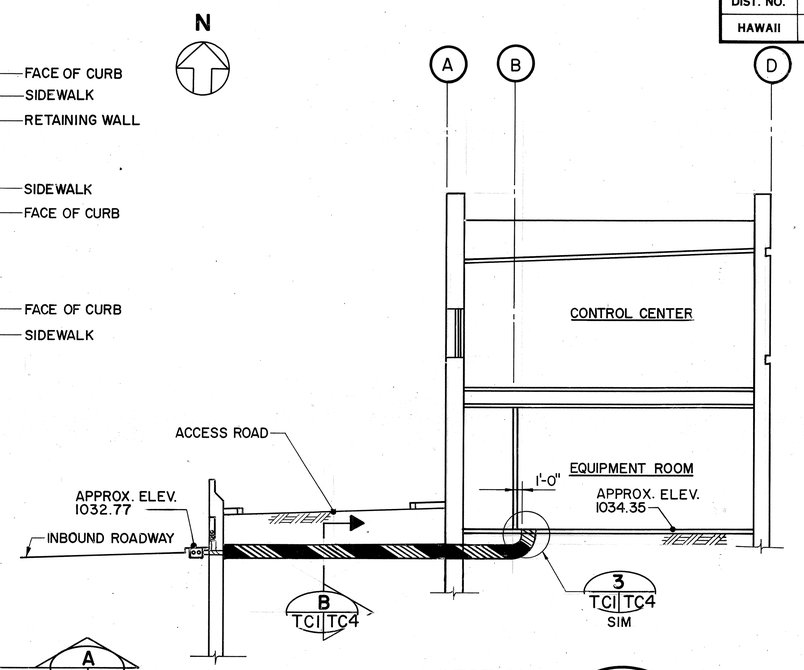

SECTION A

SCALE: 1/8" = 1'-0"

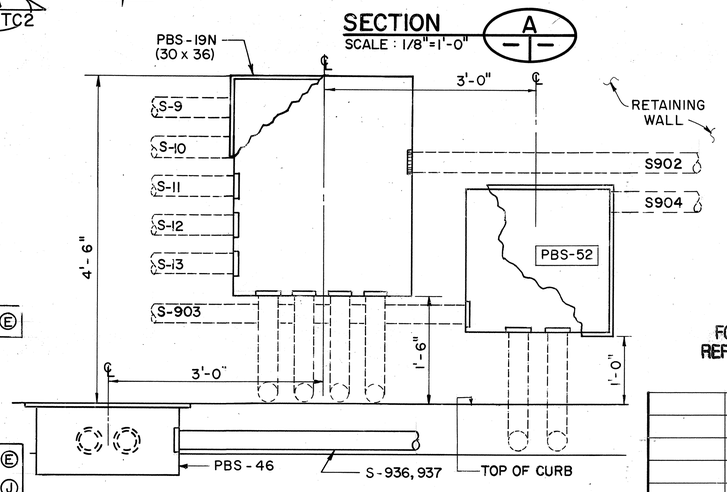

SECTION B

SCALE: 1" = 1'-0"

FOR DETAIL AS-BUILT INFORMATION
REFER TO CONSTRUCTION SUBMITTALS

NOTES:

1. INSTALL SLEEVE(S) AT ELEVATION 1047
2. INSTALL SLEEVE(S) AT ELEVATION 1049
3. THREAD AND CAP ALL SLEEVES, ALLOW 3 INCHES BETWEEN CAP AND FINISHED WALL.
4. SLEEVE SIZES SHOWN INDICATE INSIDE DIAMETER.

GRAPHIC SCALE

1' 0' 1' 2'
1"=1'-0"

1' 0' 1' 2' 3' 4' 5'
1/2"=1'-0"

8' 0' 8' 16'
1/8"=1'-0"

STANLEY M. O. T. CHANG
REGISTERED PROFESSIONAL ENGINEER
No. 6312-C
HAWAII, U.S.A.

THIS WORK WAS PREPARED BY ME OR UNDER MY SUPERVISION

Stanley M.O.T. Chang

DATE	REVISION
	AS-BUILT

STATE OF HAWAII
DEPARTMENT OF TRANSPORTATION
HIGHWAYS DIVISION

SYSTEMS CONDUIT
LEVEL I PLAN

CONTROL BUILDING

INTERSTATE ROUTE H-3

F.A.I. PROJ NO. I-H3-1(64)

SCALE: AS NOTED DATE JUN 1990

SHEET NO. TC1 OF 5 SHEETS

ORIGINAL PLAN	SURVEY PLOTTED BY	DATE
	DRAWN BY C. MARLAND	5/4/90
NOTE BOOK	TRACED BY	
	DESIGNED BY W. WILLIAMS	5/4/90
No.	QUANTITIES BY	
	CHECKED BY H. SMITH	5/4/90

517

FED. ROAD DIST. NO.	STATE	FED. AID PROJ. NO.	FISCAL YEAR	SHEET NO.	TOTAL SHEETS
HAWAII	HAW.	I-H3-1(64)	1990	518	531

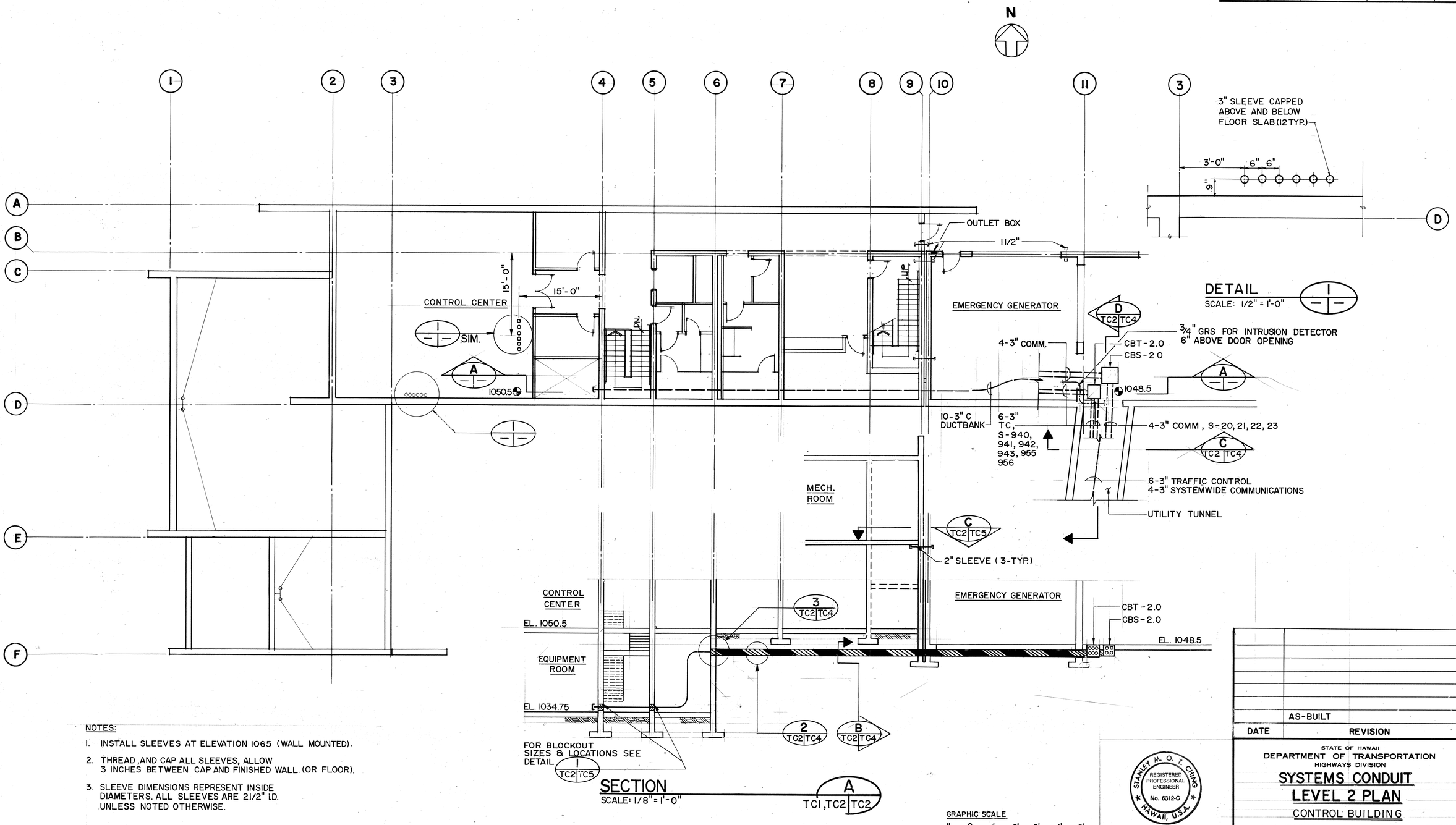

NOTES:

1. INSTALL SLEEVES AT ELEVATION 1065 (WALL MOUNTED).
2. THREAD, AND CAP ALL SLEEVES, ALLOW 3 INCHES BETWEEN CAP AND FINISHED WALL (OR FLOOR).
3. SLEEVE DIMENSIONS REPRESENT INSIDE DIAMETERS. ALL SLEEVES ARE 2 1/2" I.D. UNLESS NOTED OTHERWISE.

GRAPHIC SCALE

1' 0 1' 2' 3' 4' 5'
1/2" = 1'-0"

8' 0' 8' 16'
1/8" = 1'-0"

STANLEY M. O. T. CHING
REGISTERED PROFESSIONAL ENGINEER
No. 6312-C
HAWAII, U.S.A.

THIS WORK WAS PREPARED BY ME OR UNDER MY SUPERVISION

Stanley M. O. T. Ching

DATE	REVISION
	AS-BUILT

STATE OF HAWAII
DEPARTMENT OF TRANSPORTATION
HIGHWAYS DIVISION

SYSTEMS CONDUIT LEVEL 2 PLAN

CONTROL BUILDING

INTERSTATE ROUTE H-3

F.A.I. PROJ. NO. I-H3-1(64)

SCALE: AS NOTED DATE: JUN 1990

SHEET NO. TC2 OF 5 SHEETS

ORIGINAL PLAN	SURVEY PLOTTED BY	DATE: 6/22/90
	DRAWN BY S. SANDIFER	6/22/90
NOTE BOOK	TRACED BY	6/22/90
	DESIGNED BY W. WILLIAMS	6/22/90
	QUANTITIES BY	6/22/90
No.	CHECKED BY H. SMITH	

518

FED. ROAD DIST. NO.	STATE	FED. AID PROJ. NO.	FISCAL YEAR	SHEET NO.	TOTAL SHEETS
HAWAII	HAW.	I-H3-1(64)	1990	519	531

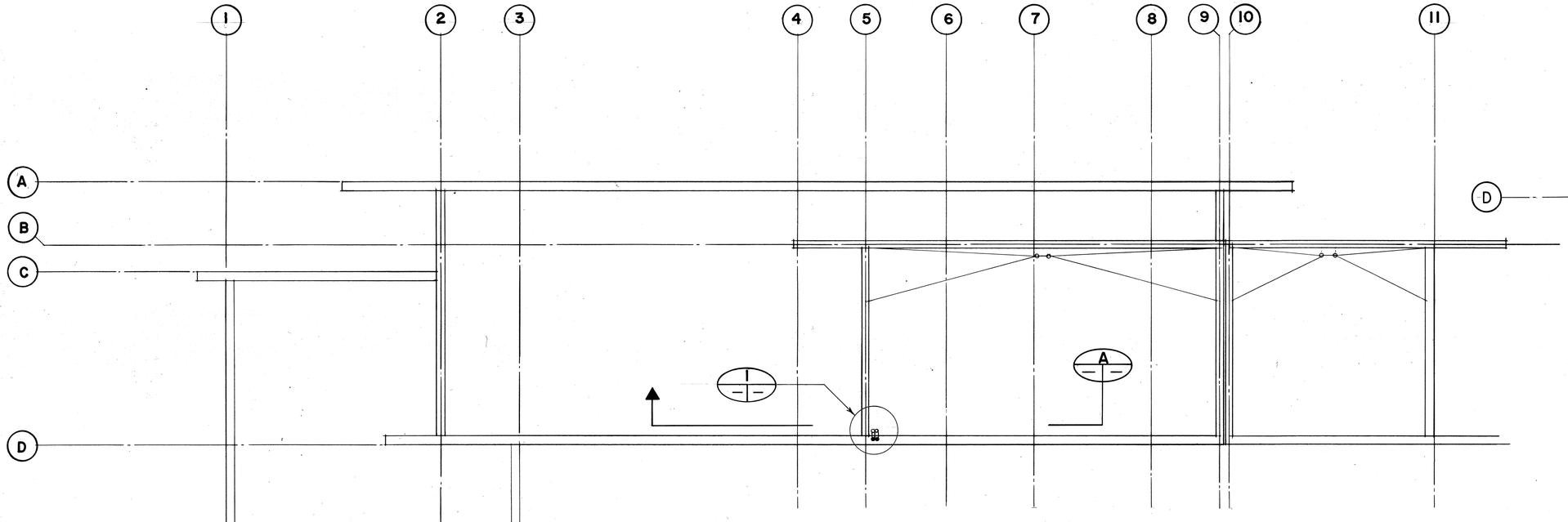

ROOF PLAN
SCALE: 1/8"=1'-0"

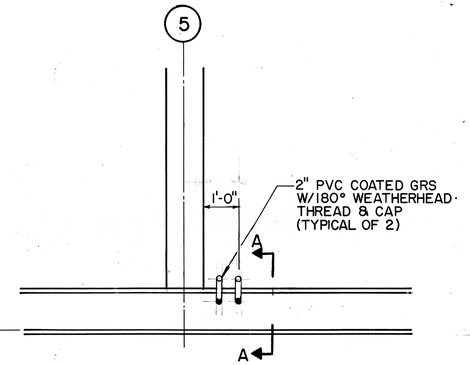

DETAIL
SCALE: 1/2" = 1'-0"

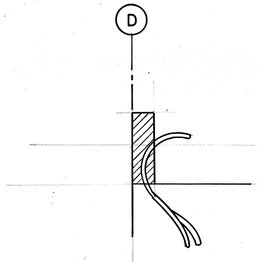

SECTION A-A
NTS

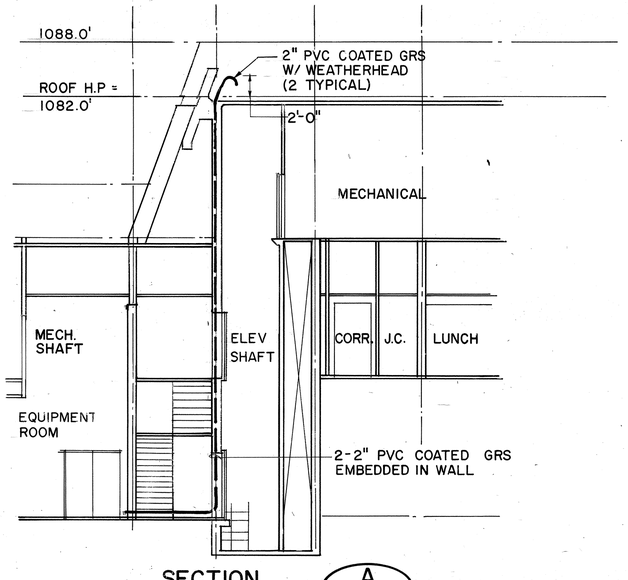

SECTION
SCALE 1/8" = 1'-0"

GRAPHIC SCALE
1' 0 1' 2' 3' 4' 5'
1/2" = 1'-0"
8' 0 8' 16'
1/8" = 1'-0"

STANLEY M. O. T. CHING
REGISTERED PROFESSIONAL ENGINEER
No. 6312-C
HAWAII, U.S.A.

THIS WORK WAS PREPARED BY ME OR UNDER MY SUPERVISION
Stanley M.O.T. Ching

DATE	REVISION
	AS-BUILT

STATE OF HAWAII
DEPARTMENT OF TRANSPORTATION
HIGHWAYS DIVISION

SYSTEMS CONDUIT
ROOF PLAN
CONTROL BUILDING
INTERSTATE ROUTE H-3
F.A.I. PROJ. NO. I-H3-1 (64)

SCALE: AS NOTED DATE: JUN 1990

SHEET NO. TC3 OF 5 SHEETS

ORIGINAL PLAN		DATE
	SURVEY PLOTTED BY	
	DRAWN BY C. MARLAND	6/4/90
	TRACED BY	6/4/90
NOTE BOOK	DESIGNED BY W. WILLIAMS	6/4/90
	QUANTITIES BY	
No.	CHECKED BY H. SMITH	6/4/90

FED. ROAD DIST. NO.	STATE	FED. AID PROJ. NO.	FISCAL YEAR	SHEET NO.	TOTAL SHEETS
HAWAII	HAW.	I-H3-1(64)	1990	520	531

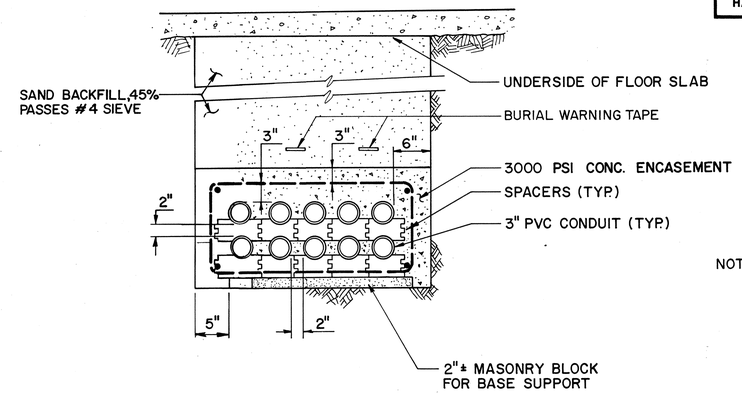

NOTE: FOR REBAR SIZING & PLACEMENT SEE STRUCTURAL DRAWINGS.

SECTION B
SCALE: 1"= 1'-0"
TC1, TC2 | TC4

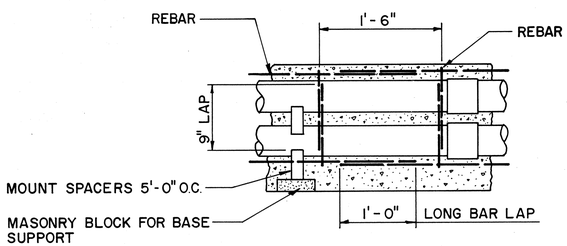

DETAIL 2
SCALE: NONE
TC2 | TC4

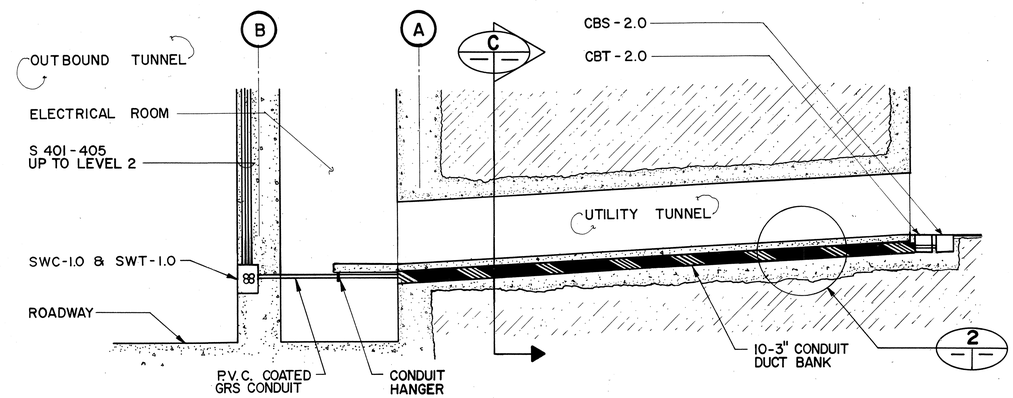

SECTION D
SCALE: 1/8"=1'-0"
TC2 | TC4

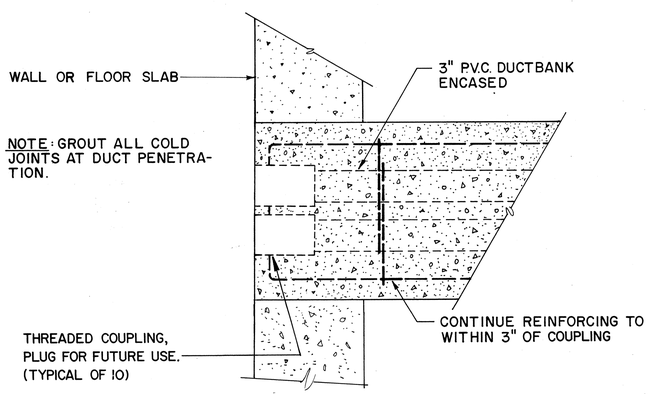

DETAIL 3
SCALE: 1 1/2"= 1'-0"
TC1, TC2 | TC4

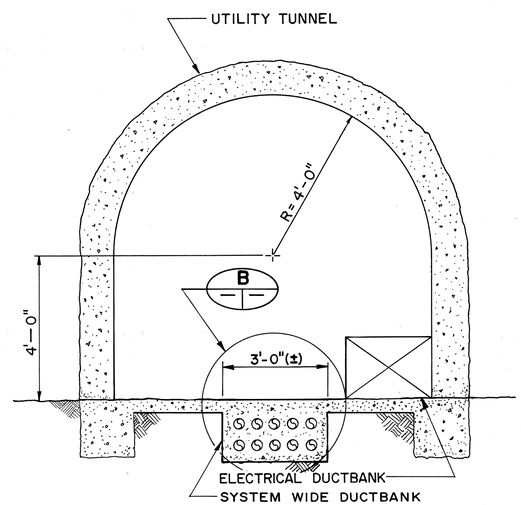

SECTION C
SCALE: NONE
TC2 | TC4

GRAPHIC SCALE

8' 0' 8' 16'
1/8"= 1'-0"

1' 0' 1'
1 1/2"= 1'-0"

1' 0' 1' 2'
1"= 1'-0"

STANLEY M. O. T. CHING
REGISTERED PROFESSIONAL ENGINEER
No. 6312-C
HAWAII, U.S.A.

THIS WORK WAS PREPARED BY ME OR UNDER MY SUPERVISION

Stanley M.O.T. Ching

DATE	REVISION
	AS-BUILT

STATE OF HAWAII
DEPARTMENT OF TRANSPORTATION
HIGHWAYS DIVISION

SYSTEMS CONDUIT DETAILS-1

CONTROL BUILDING
INTERSTATE ROUTE H-3
F.A.I. PROJ. NO. I-H3-1(64)

SCALE: AS NOTED DATE: JUN 1990

SHEET NO. TC4 OF 5 SHEETS

		DATE
ORIGINAL PLAN	SURVEY PLOTTED BY	6/18/90
	DRAWN BY R. HOMOLYA	"
NOTE BOOK	TRACED BY	"
	DESIGNED BY W. WILLIAMS	6/18/90
No.	QUANTITIES BY	"
	CHECKED BY H. SMITH	6/18/90

FED. ROAD DIST. NO.	STATE	FED. AID PROJ. NO.	FISCAL YEAR	SHEET NO.	TOTAL SHEETS
HAWAII	HAW.	I-H3-1(64)	1990	521	531

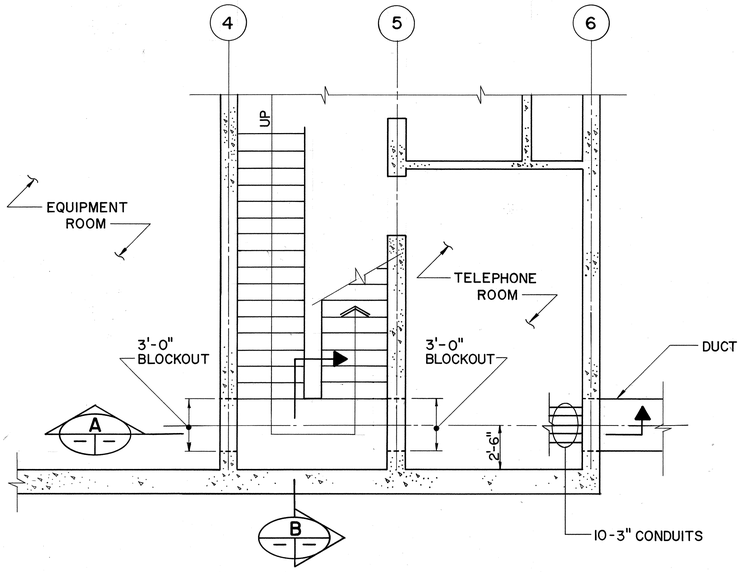

DETAIL 1 (TC1 | TC5)
SCALE: 1/4"=1'-0"

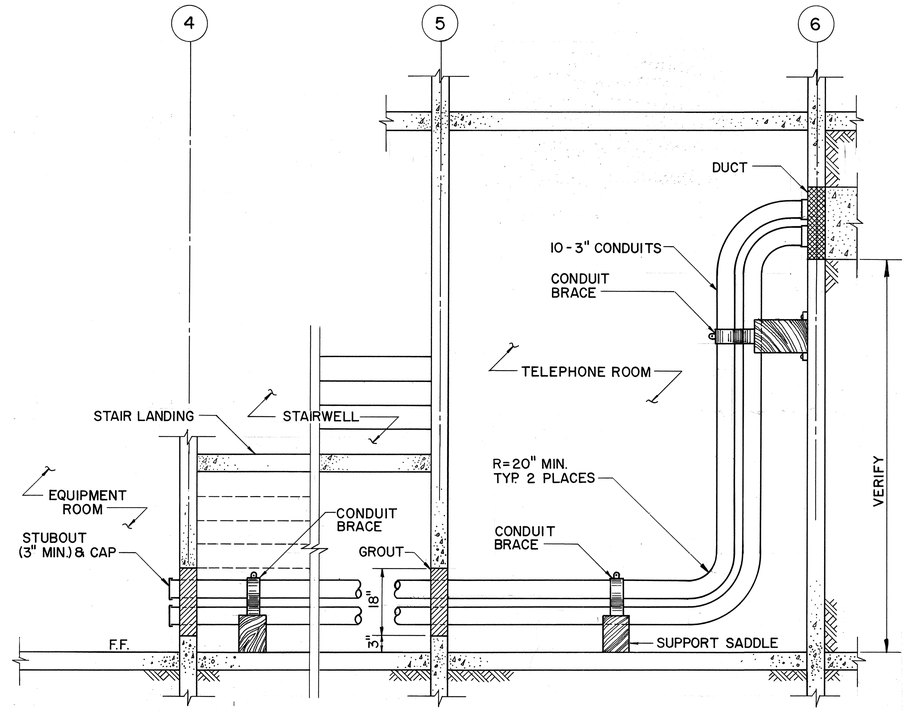

SECTION A
N.T.S.

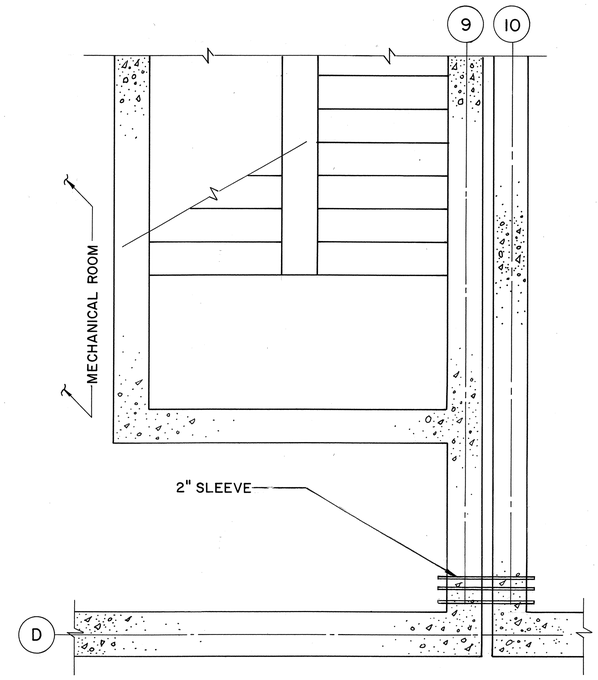

SECTION C
SCALE: 1/2"=1'-0" (TC2 | TC5)

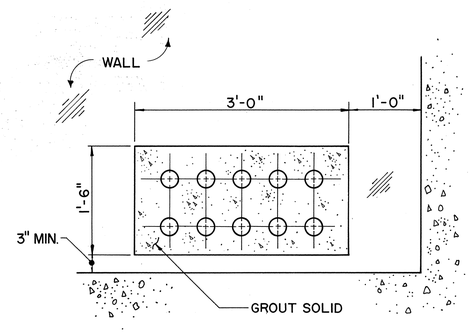

SECTION B
SCALE: 1"=1'-0"

GRAPHIC SCALE

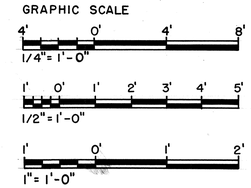

STANLEY M. O. T. CHING
REGISTERED PROFESSIONAL ENGINEER
No. 6312-C
HAWAII, U.S.A.

THIS WORK WAS PREPARED BY ME OR UNDER MY SUPERVISION

Stanley M.O.T. Ching

DATE	REVISION
	AS-BUILT

STATE OF HAWAII
DEPARTMENT OF TRANSPORTATION
HIGHWAYS DIVISION

SYSTEMS CONDUIT DETAILS-1

CONTROL BUILDING

INTERSTATE ROUTE H-3
F.A.I. PROJ. NO. I-H3-1(64)

SCALE: AS NOTED DATE: JUN. 1990

SHEET NO. TC5 OF 5 SHEETS

		DATE
ORIGINAL PLAN	SURVEY PLOTTED BY	
	DRAWN BY S. SANDIFER	6/27/90
NOTE BOOK	TRACED BY	" "
	DESIGNED BY W. WILLIAMS	6/25/90
No.	QUANTITIES BY	" "
	CHECKED BY H. SMITH	6/27/90

FED. ROAD DIST. NO.	STATE	FED. AID PROJ. NO.	FISCAL YEAR	SHEET NO.	TOTAL SHEETS
HAWAII	HAW.	I-H3-1(64)	1990	522	531

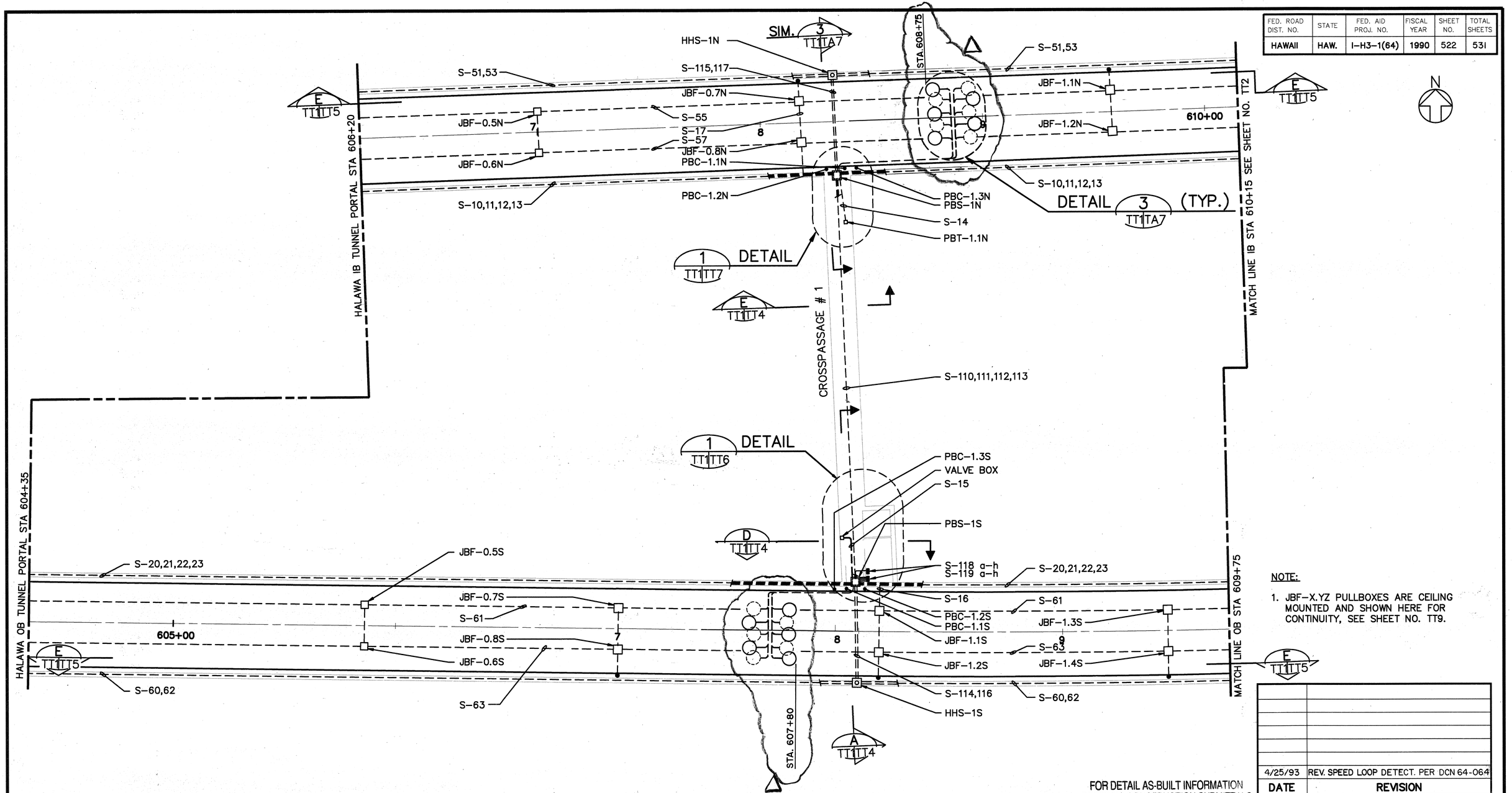

NOTE:

1. JBF-X.YZ PULLBOXES ARE CEILING MOUNTED AND SHOWN HERE FOR CONTINUITY, SEE SHEET NO. TT9.

FOR DETAIL AS-BUILT INFORMATION REFER TO CONSTRUCTION SUBMITTALS

GRAPHIC SCALE:
20' 10' 0' 20' 40'
1" = 20'-0"

STANLEY M. O. T. CHING
REGISTERED PROFESSIONAL ENGINEER
No. 6312-C
HAWAII, U.S.A.

THIS WORK WAS PREPARED BY ME OR UNDER MY SUPERVISION

Stanley M.O.T. Ching

DATE	REVISION
4/25/93	REV. SPEED LOOP DETECT. PER DCN 64-064

STATE OF HAWAII
DEPARTMENT OF TRANSPORTATION
HIGHWAYS DIVISION

SYSTEMS CONDUIT PLAN
PORTAL TO STA. 609+75
HALAWA TUNNELS

INTERSTATE ROUTE H-3
F.A.I. PROJ. NO. I-H3-1(64)

SCALE: 1" = 20'-0" DATE: JUN. 1990

SHEET NO. TT1 OF 10 SHEETS

ORIGINAL PLAN		DATE
	SURVEY PLOTTED BY	
	DRAWN BY CADD	06/27/90
	TRACED BY	
NOTEBOOK	DESIGNED BY W.WILLIAMS	5/28/89
	QUANTITIES BY	
No.	CHECKED BY H.SMITH	06/27/90

TT1-H3SC-H3\C190 -06-27-90

FED. ROAD DIST. NO.	STATE	FED. AID PROJ. NO.	FISCAL YEAR	SHEET NO.	TOTAL SHEETS
HAWAII	HAW.	I-H3-1(64)	1990	523	531

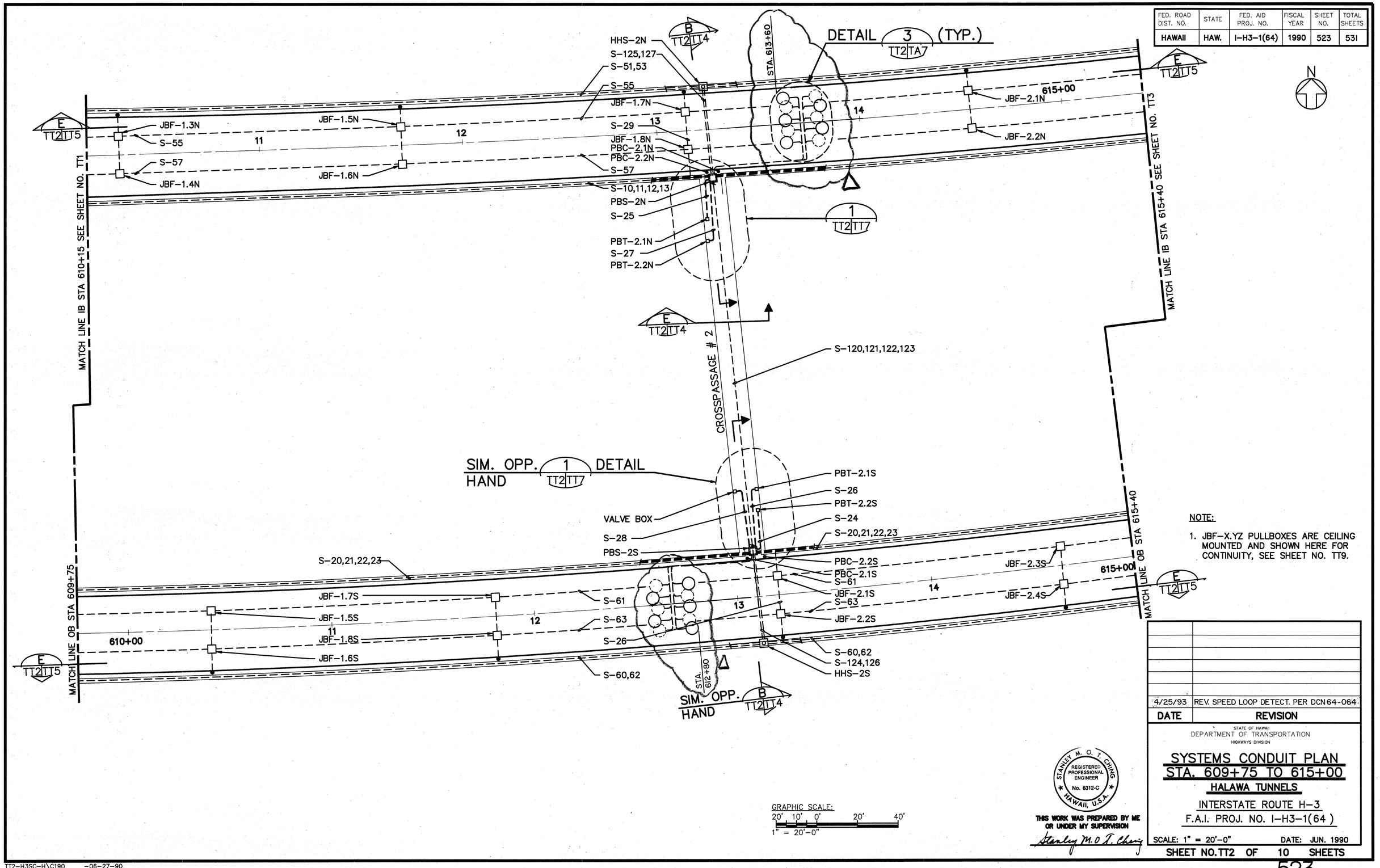

NOTE:

1. JBF-X.YZ PULLBOXES ARE CEILING MOUNTED AND SHOWN HERE FOR CONTINUITY, SEE SHEET NO. TT9.

GRAPHIC SCALE:
20' 10' 0' 20' 40'
1" = 20'-0"

STANLEY M. O. T. CHING
REGISTERED PROFESSIONAL ENGINEER
No. 6312-C
HAWAII, U.S.A.

THIS WORK WAS PREPARED BY ME OR UNDER MY SUPERVISION

Stanley M. O. T. Ching

DATE	REVISION
4/25/93	REV. SPEED LOOP DETECT. PER DCN 64-064

STATE OF HAWAII
DEPARTMENT OF TRANSPORTATION
HIGHWAYS DIVISION

SYSTEMS CONDUIT PLAN
STA. 609+75 TO 615+00
HALAWA TUNNELS

INTERSTATE ROUTE H-3
F.A.I. PROJ. NO. I-H3-1(64)

SCALE: 1" = 20'-0" DATE: JUN. 1990

SHEET NO. TT2 OF 10 SHEETS

ORIGINAL PLAN		DATE
	SURVEY PLOTTED BY	CADD
	DRAWN BY	
	TRACED BY	W. WILLIAMS 5/26/89
NOTEBOOK	DESIGNED BY	
	QUANTITIES BY	H. SMITH 06/27/90
No.	CHECKED BY	

TT2-H3SC-H\C190 -06-27-90

FED. ROAD DIST. NO.	STATE	FED. AID PROJ. NO.	FISCAL YEAR	SHEET NO.	TOTAL SHEETS
HAWAII	HAW.	I-H3-1(64)	1990	524	531

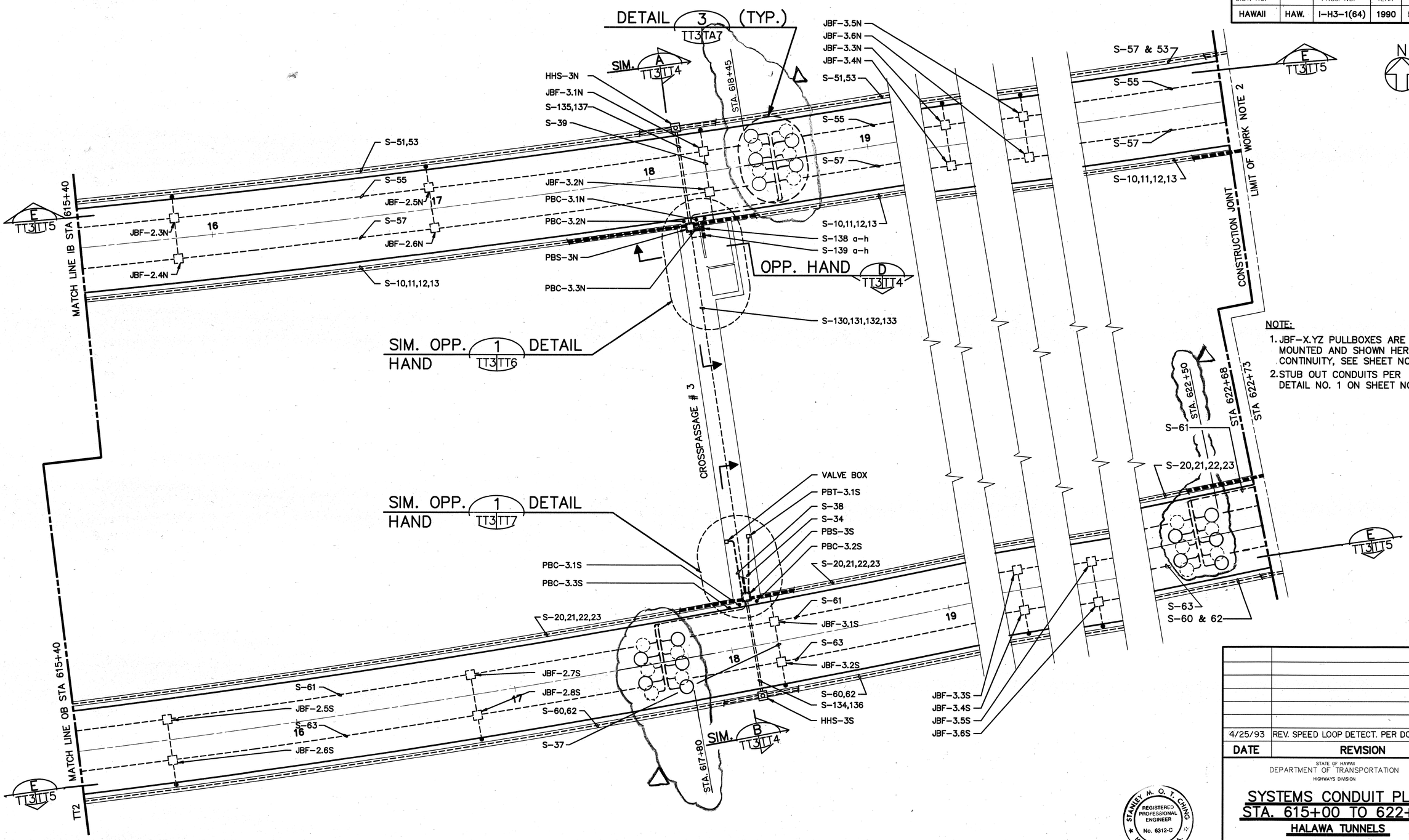

NOTE:

1. JBF-X.YZ PULLBOXES ARE CEILING MOUNTED AND SHOWN HERE FOR CONTINUITY, SEE SHEET NO. TT9
2. STUB OUT CONDUITS PER DETAIL NO. 1 ON SHEET NO. TA4

GRAPHIC SCALE:
20' 10' 0' 20' 40'
1" = 20'-0"

4/25/93	REV. SPEED LOOP DETECT. PER DCN64-064
DATE	REVISION

STATE OF HAWAII
DEPARTMENT OF TRANSPORTATION
HIGHWAYS DIVISION

SYSTEMS CONDUIT PLAN
STA. 615+00 TO 622+73
HALAWA TUNNELS

INTERSTATE ROUTE H-3
F.A.I. PROJ. NO. I-H3-1(64)

SCALE: 1" = 20'-0" DATE: JUN. 1990

SHEET NO. TT3 OF 10 SHEETS

STANLEY M. O. T. CHING
REGISTERED PROFESSIONAL ENGINEER
No. 6312-C
HAWAII, U.S.A.

THIS WORK WAS PREPARED BY ME OR UNDER MY SUPERVISION

Stanley M. O. T. Ching

ORIGINAL PLAN		DATE
	SURVEY PLOTTED BY: CADD	06/27/90
	DRAWN BY:	
NOTEBOOK	TRACED BY: W.WILLIAMS	5/28/90
	DESIGNED BY:	
No.	QUANTITIES BY: H.SMITH	
	CHECKED BY:	06/27/90

TT3-H3SC-H3/C1 -06-27-90

FED. ROAD DIST. NO.	STATE	FED. AID PROJ. NO.	FISCAL YEAR	SHEET NO.	TOTAL SHEETS
HAWAII	HAW.	I-H3-I (64)	1990	525	531

NOTES:

1. PULLBOX IDENTIFICATION LETTERS "W, X, Y & Z" ARE VARIABLES. SEE PLAN DRAWINGS FOR PULLBOX IDENTIFICATION.
2. INBOUND END, X-PSG #2, AS SHOWN. OUTBOUND END, X-PSG #2, OPPOSITE HAND. INBOUND END, X-PSG #1, SIMILAR. OUTBOUND END, X-PSG #3, SIMILAR AND OPPOSITE HAND.
3. OUTBOUND END, X-PSG #1, AS SHOWN. INBOUND END, X-PSG #3, OPPOSITE HAND.
4. TYPICAL X-PSG ENTRY, INBOUND END, AS SHOWN. X-PSG ENTRY, OUTBOUND END, OPPOSITE HAND; SEE NOTE 5 FOR EXCEPTION.
5. BLOCKOUT FOR TRAFFIC SIGNAL SHALL BE ON RIGHT SIDE OF DOORS, TYPICAL FOR ALL INBOUND AND OUTBOUND.
6. OCCURS AT INBOUND END OF X-PSG #3 AND OUTBOUND END OF X-PSG #1 ONLY, FOR CO MONITOR.
7. CONDUIT ROUTING AT LOCATIONS WITHOUT ADJACENT EQUIPMENT ROOM.

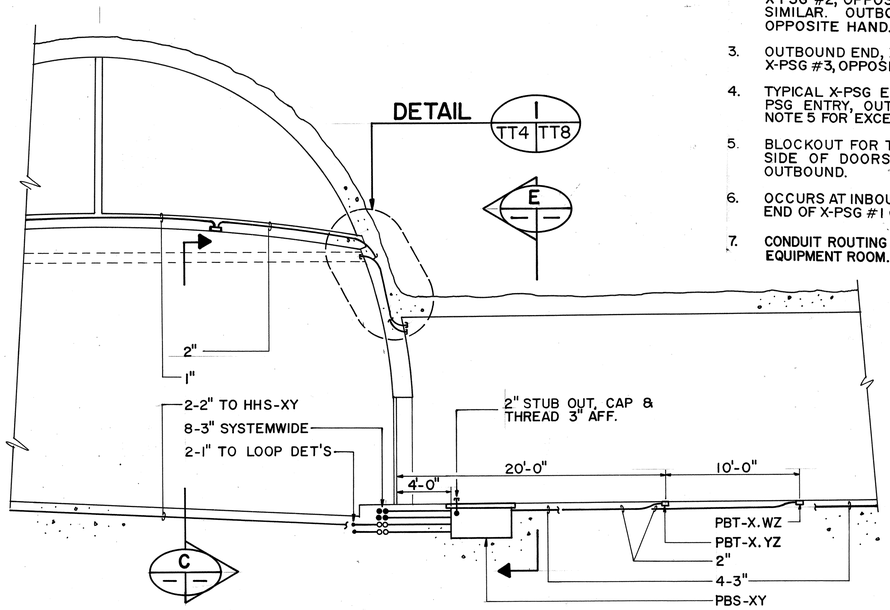

(NOTE 2) **SECTION B** TT1, TT3 TT4
SCALE: 3/16"=1'-0"

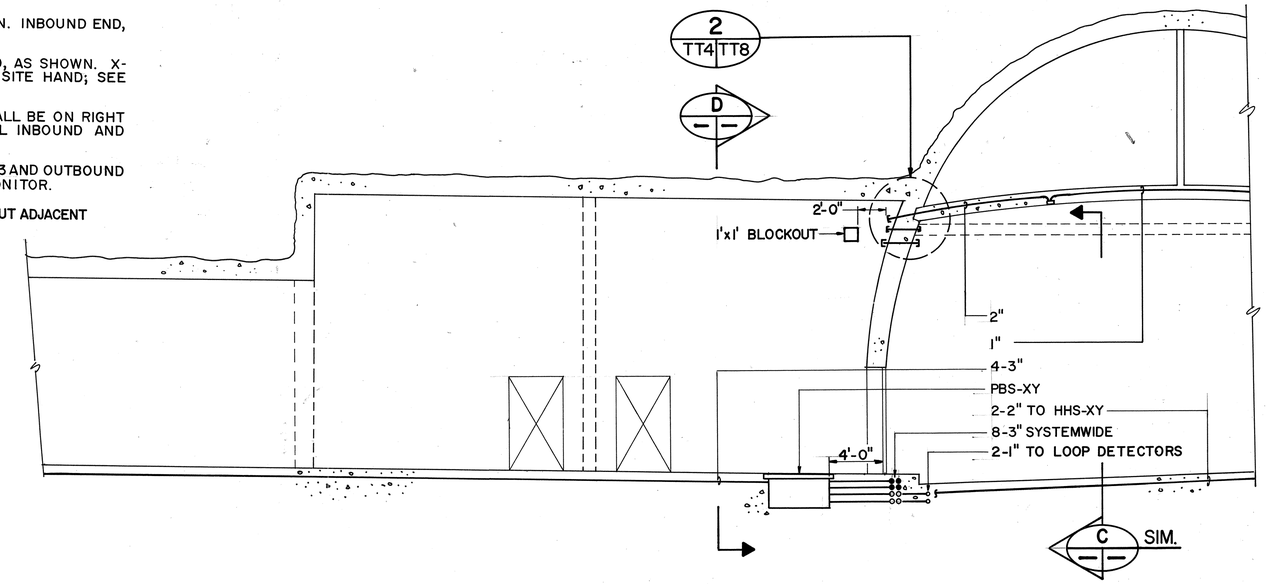

(NOTE 3) **SECTION A** TT1, TT3 TT4
SCALE: 3/16"=1'-0"

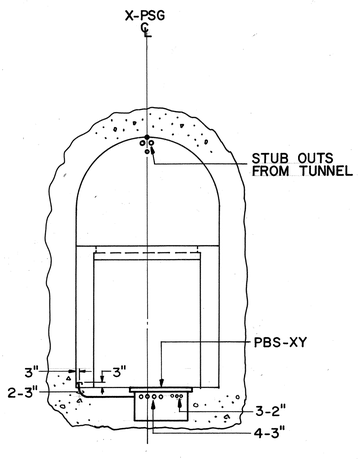

SECTION E
SCALE: 1/4"=1'-0"

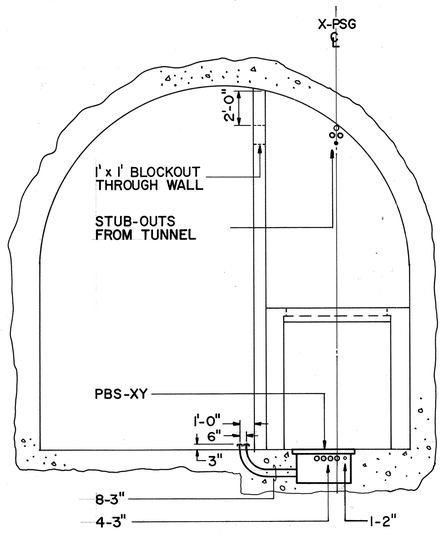

SECTION D
SCALE: 1/4"=1'-0"

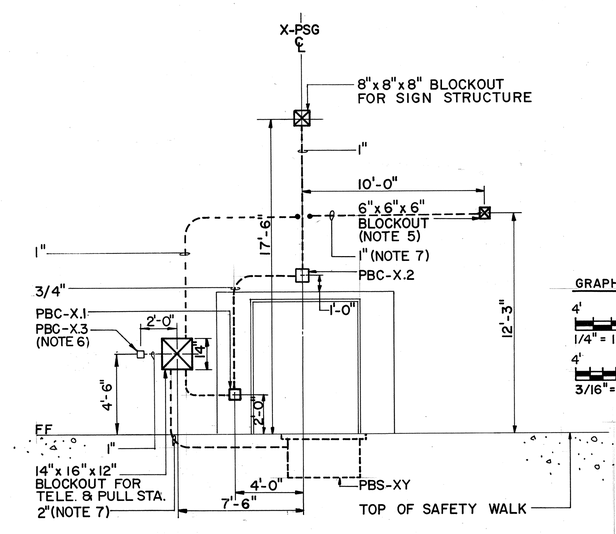

(NOTE 4) **SECTION C**
SCALE: 1/4"=1'-0"

GRAPHIC SCALE
4' 0' 4' 8'
1/4" = 1'-0"
4' 0' 4' 8' 12'
3/16" = 1'-0"

DATE:	REVISION

STANLEY M. O. T. CHING
REGISTERED PROFESSIONAL ENGINEER
No. 6312-C
HAWAII, U.S.A.

THIS WORK WAS PREPARED BY ME OR UNDER MY SUPERVISION
Stanley M.O.T. Ching

STATE OF HAWAII
DEPARTMENT OF TRANSPORTATION
HIGHWAYS DIVISION

SYSTEMS CONDUIT
SECTIONS - I
HALAWA TUNNELS
INTERSTATE ROUTE H-3
F.A.I. PROJ. NO. I-H3-1(64)

SCALE: AS NOTED DATE: JUN 1990

SHEET NO. TT4 OF 10 SHEETS

		DATE
ORIGINAL PLAN	SURVEY PLOTTED BY	
	DRAWN BY	6/21/90
	TRACED BY W. WILLIAMS	
NOTE BOOK	DESIGNED BY W. WILLIAMS	6/21/90
	QUANTITIES BY	
No.	CHECKED BY H. SMITH	6/21/90

FED. ROAD DIST. NO.	STATE	FED. AID PROJ. NO.	FISCAL YEAR	SHEET NO.	TOTAL SHEETS
HAWAII	HAW.	I-H3-I(64)	1990	526	531

NOTES:

1. PULLBOX IDENTIFICATION LETTERS "X,Y & Z" ARE VARIABLES. SEE PLANS FOR PULLBOX IDENTIFICATION NUMBERS.
2. NOT ALL ELECTRICAL PULLBOXES SHOWN FOR CLARITY.

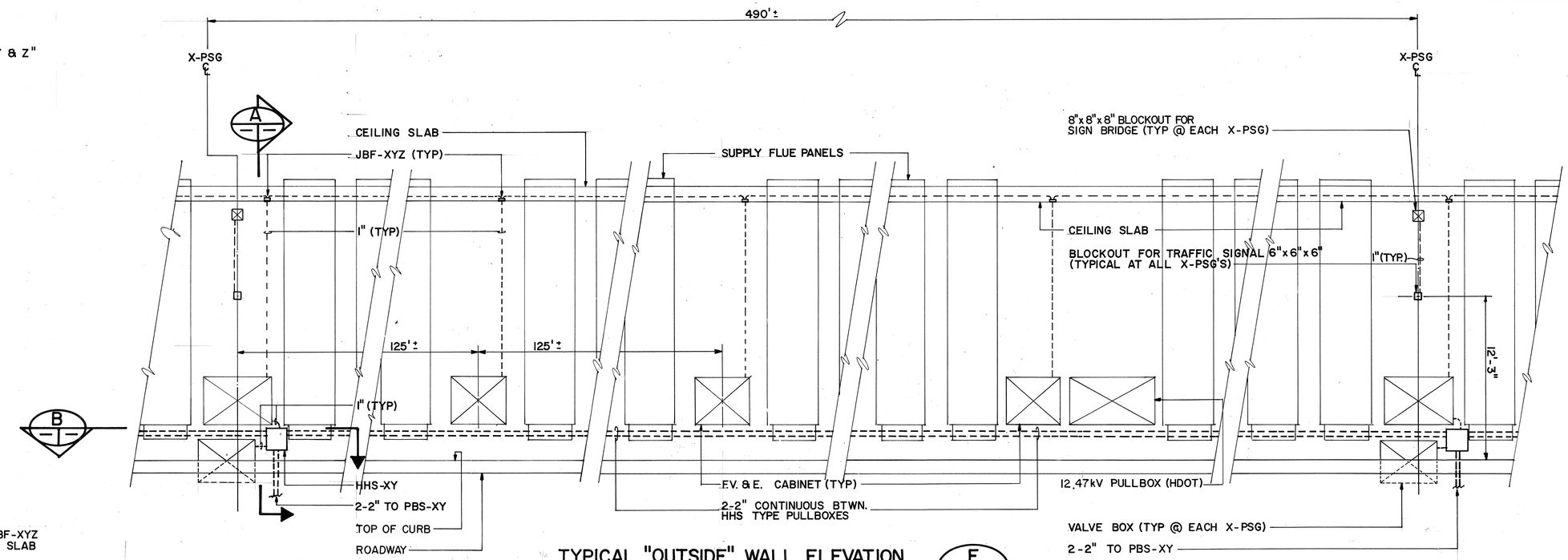

TYPICAL "OUTSIDE" WALL ELEVATION (E)
SCALE: 1/4"=1'-0"
TT1-TT3 TT5

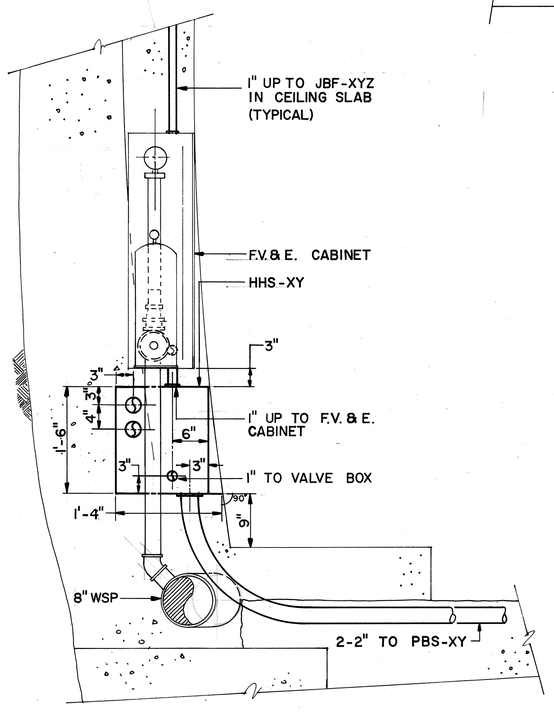

SECTION (A)
SCALE: 1"=1'-0"

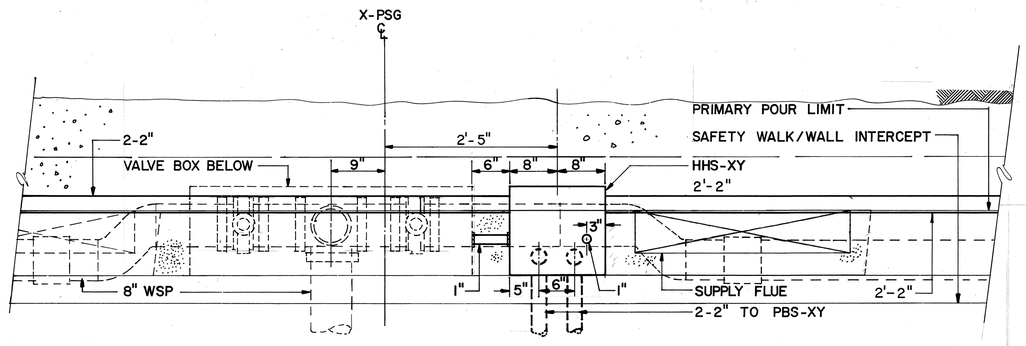

SECTION (B)
SCALE: 1"=1'-0"

GRAPHIC SCALE
4' 2' 0 4' 8'
1/4"=1'-0"
1' 6" 0 1' 2'
1"=1'-0"

DATE	REVISION

STATE OF HAWAII
DEPARTMENT OF TRANSPORTATION
HIGHWAYS DIVISION

SYSTEMS CONDUIT SECTIONS-2

HALAWA TUNNELS
INTERSTATE ROUTE H-3
F.A.I. PROJ. NO. I-H3-I(64)

STANLEY M. O. T. CHING
REGISTERED PROFESSIONAL ENGINEER
No. 6312-C
HAWAII, U.S.A.

THIS WORK WAS PREPARED BY ME OR UNDER MY SUPERVISION
Stanley M.O.T. Ching

SCALE: AS NOTED
DATE: JUN 1990

SHEET NO TT5 OF 10 SHEETS

		DATE
SURVEY PLOTTED BY		
DRAWN BY	W. WILLIAMS	5/26/90
TRACED BY		
DESIGNED BY	W. WILLIAMS	8/28/90
QUANTITIES BY		
CHECKED BY	H. SMITH	5/27/90

ORIGINAL PLAN
NOTE BOOK
No.

FED. ROAD DIST. NO.	STATE	FED. AID PROJ. NO.	FISCAL YEAR	SHEET NO.	TOTAL SHEETS
HAWAII	HAW.	I-H3-1 (64)	1990	527	531

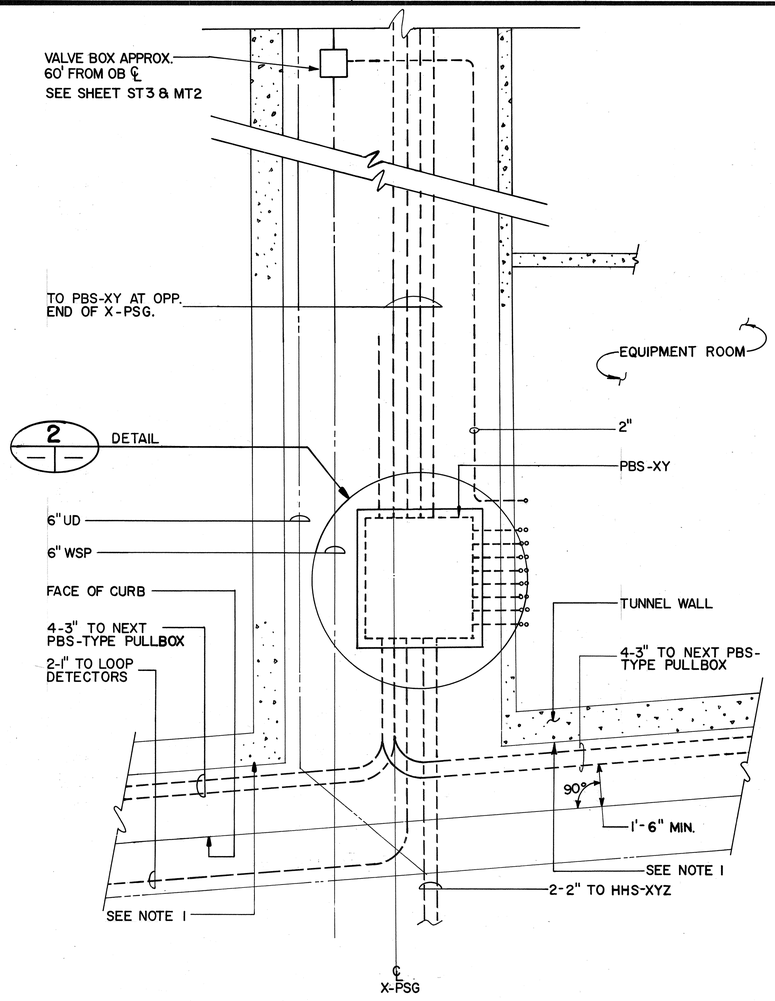

DETAIL 1 (TT1, TT3, TT6)
SCALE: 1/4"=1'-0"

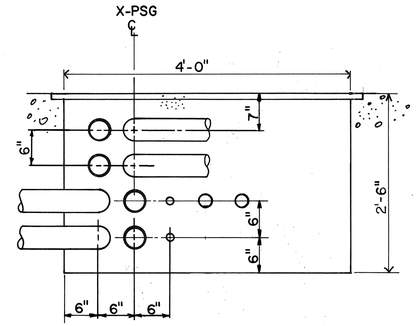

SECTION A
SCALE: 1"=1'-0"

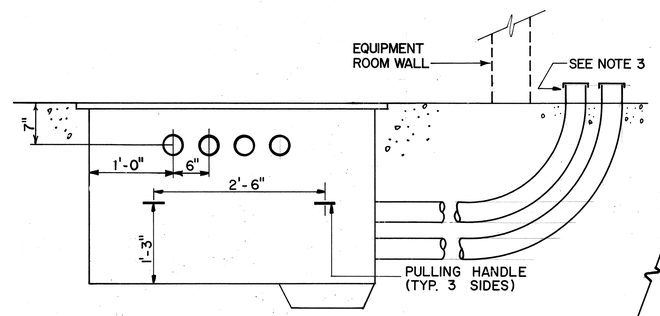

SECTION B
SCALE: 1"=1'-0"

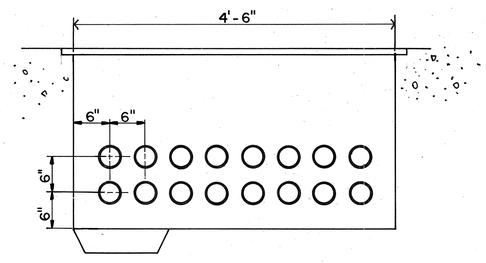

SECTION C
SCALE: 1"=1'-0"

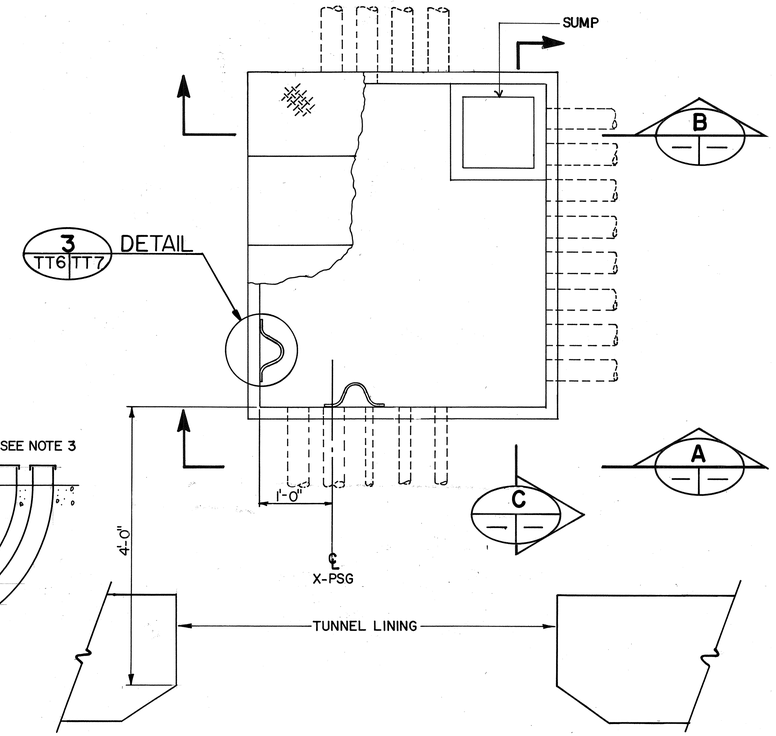

DETAIL 2
SCALE: 1"=1'-0"

NOTES

1. SEE SECTION C/TT4 FOR LOCATIONS OF "PBC" PULLBOXES
2. SEE STRUCTURAL PLANS FOR PULLBOX CONSTRUCTION DETAILS.
3. USE PVC-COATED GRS OR OTHER APPROVED NON-CORROSIVE RIGID METAL CONDUIT
4. PULLBOX IDENTIFICATION LETTERS "X,Y & Z" ARE VARIABLES. SEE PLAN FOR PULLBOX IDENTIFICATION.

GRAPHIC SCALE
4' 2' 0' 4' 8'
1/4" = 1'-0"
1' 6" 0' 1' 2'
1" = 1'-0"

STANLEY M. O. T. CHING
REGISTERED PROFESSIONAL ENGINEER
No. 6312-C
HAWAII, U.S.A.

THIS WORK WAS PREPARED BY ME OR UNDER MY SUPERVISION
Stanley M.O.T. Ching

DATE	REVISION

STATE OF HAWAII
DEPARTMENT OF TRANSPORTATION
HIGHWAYS DIVISION

SYSTEMS CONDUIT SECTIONS & DETAILS-1

HALAWA TUNNELS
INTERSTATE ROUTE H-3
F.A.I. PROJ. NO. I-H3-1(64)

SCALE: AS NOTED DATE: JUN 1990
SHEET NO. TT6 OF 10 SHEETS

		DATE
ORIGINAL PLAN	SURVEY PLOTTED BY	
	DRAWN BY W. WILLIAMS	6/27/90
NOTE BOOK	TRACED BY	
	DESIGNED BY W. WILLIAMS	6/28/90
No.	QUANTITIES BY	
	CHECKED BY H. SMITH	6/28/90

FED. ROAD DIST. NO.	STATE	FED. AID PROJ. NO.	FISCAL YEAR	SHEET NO.	TOTAL SHEETS
HAWAII	HAW.	I-H3-1(64)	1990	528	531

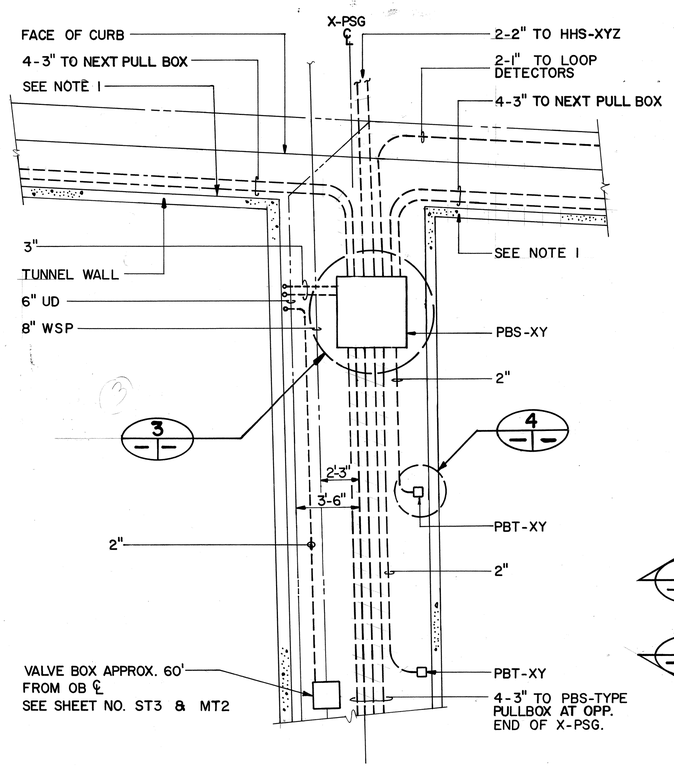

DETAIL 1
SCALE: 1/4"=1'-0" TT1, TT2, TT3 TT7

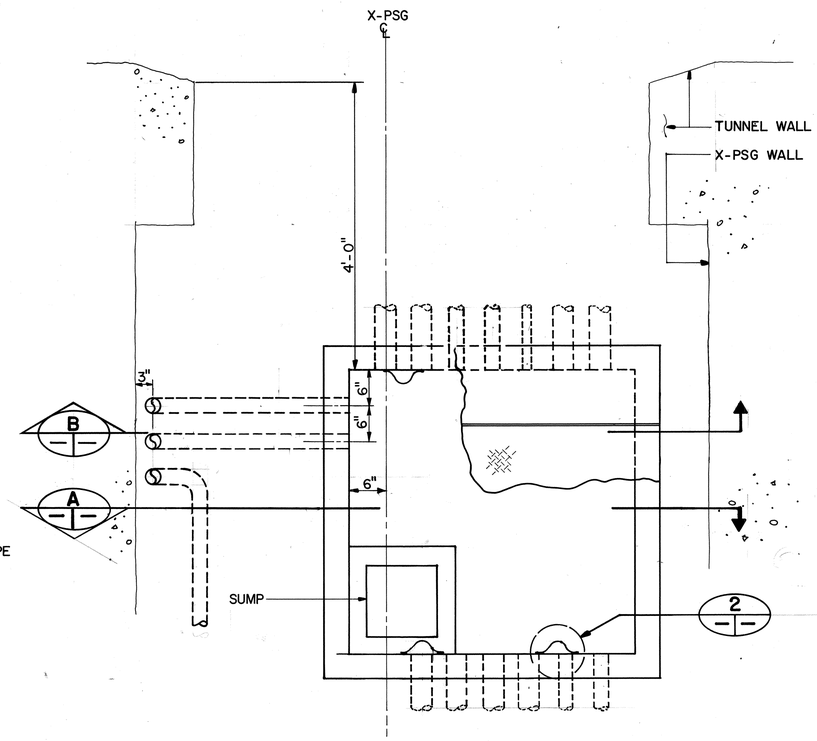

DETAIL 3
SCALE: 1"=1'-0"

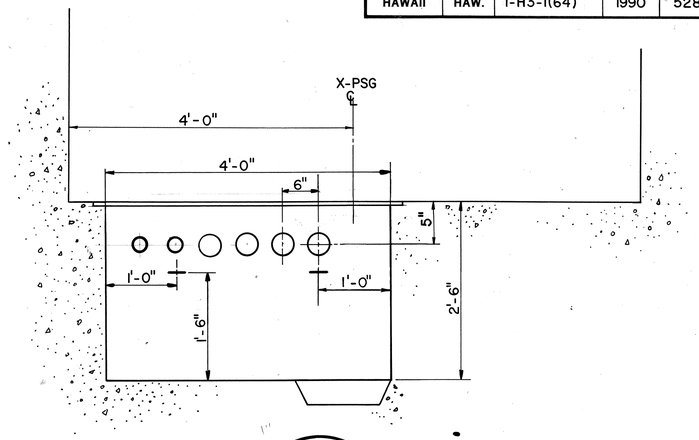

SECTION A
SCALE: 1"=1'-0"

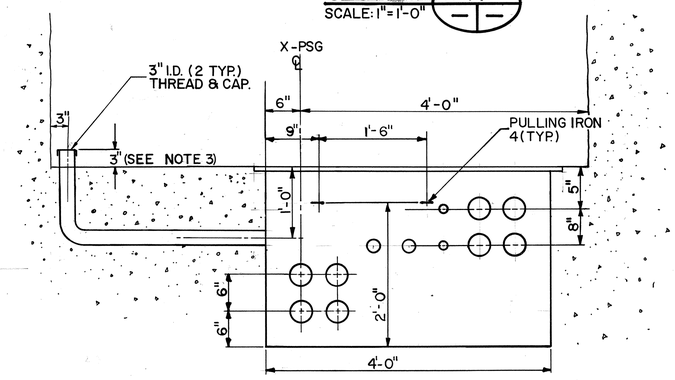

SECTION B
SCALE: 1"=1'-0"

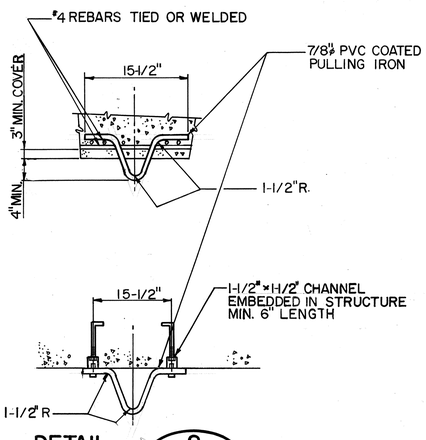

DETAIL 2
SCALE: NONE

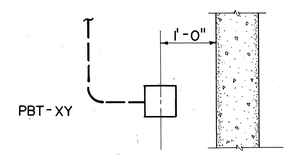

DETAIL 4
SCALE: NONE

NOTES:

1. SEE SECTION C/TT4 FOR LOCATIONS OF "PBC" PULLBOXES.
2. SEE STRUCTURAL PLANS FOR PULL BOX CONSTRUCTION DETAILS.
3. USE PVC COATED GRS OR OTHER APPROVED NON-CORROSIVE RIGID METAL CONDUIT.
4. PULL BOX IDENTIFICATION LETTERS "X, Y, & Z" ARE VARIABLES. SEE PLANS FOR PULL BOX IDENTIFICATION.

GRAPHIC SCALE
4' 2' 0' 4' 8'
1/4" = 1'-0"
1' 6" 0' 1' 2'
1" = 1'-0"

STANLEY M. O. T. CHING
REGISTERED PROFESSIONAL ENGINEER
No. 6312-C
HAWAII, U.S.A.

THIS WORK WAS PREPARED BY ME OR UNDER MY SUPERVISION
Stanley M.O.T. Ching

DATE	REVISION

STATE OF HAWAII
DEPARTMENT OF TRANSPORTATION
HIGHWAYS DIVISION

SYSTEMS CONDUIT SECTIONS & DETAILS-2

HALAWA TUNNELS
INTERSTATE ROUTE H-3
F.A.I. PROJ. NO. I-H3-1 (64)

SCALE: AS NOTED DATE: JUN 1990

SHEET NO. TT7 OF 10 SHEETS

		DATE
ORIGINAL PLAN	SURVEY PLOTTED BY	
	DRAWN BY W. WILLIAMS	5/26/90
NOTE BOOK	TRACED BY	
	DESIGNED BY W. WILLIAMS	5/26/90
	QUANTITIES BY	
No.	CHECKED BY H. SMITH	5/27/90

FED. ROAD DIST. NO.	STATE	FED. AID PROJ. NO.	FISCAL YEAR	SHEET NO.	TOTAL SHEETS
HAWAII	HAW.	I-H3-1(64)	1990	529	531

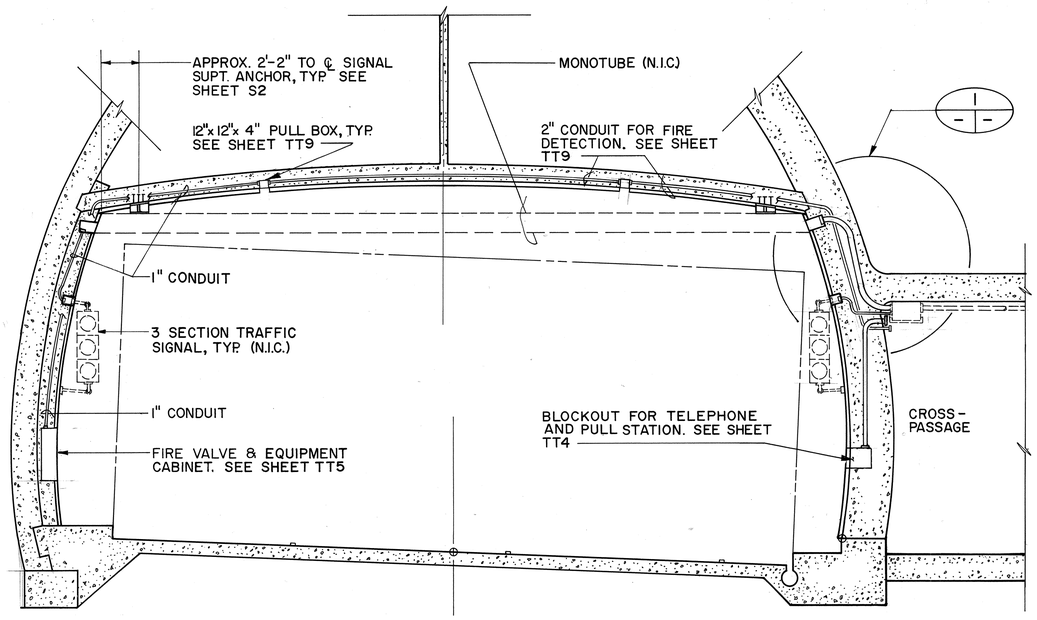

SYSTEMS CONDUIT & PULL BOX INSTALLATION DETAIL

SCALE: 1/4" = 1'-0"

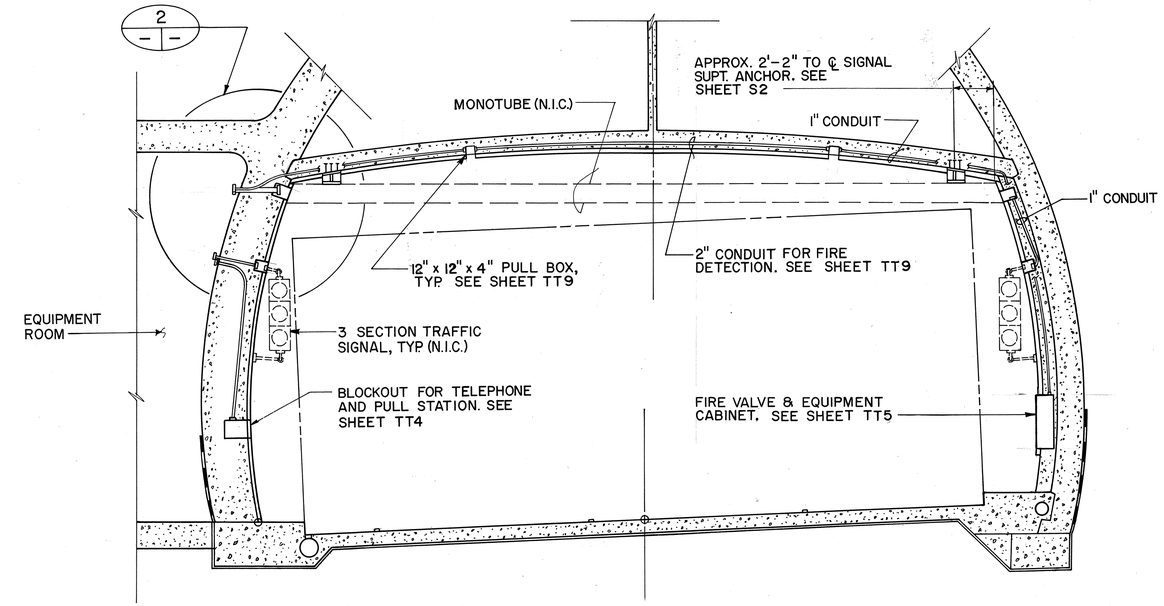

SYSTEMS CONDUIT & PULL BOX INSTALLATION DETAIL

SCALE: 1/4" = 1'-0"

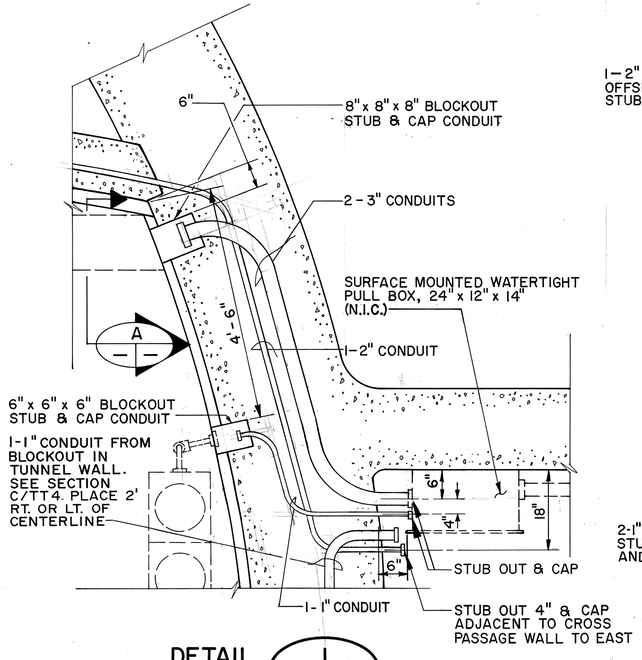

DETAIL 1

SCALE: 3/4" = 1'-0"

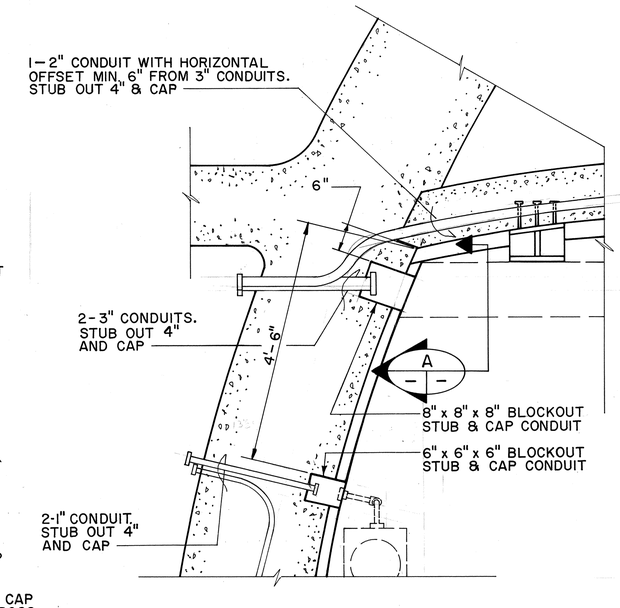

DETAIL 2

SCALE: 3/4" = 1'-0"

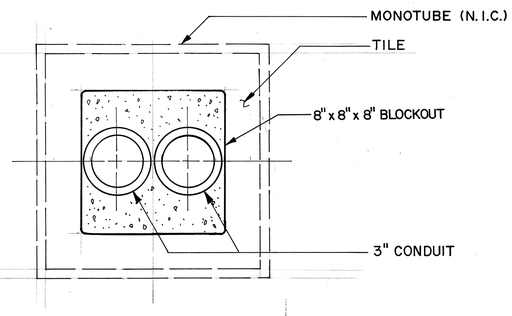

SECTION A

SCALE: 1/4" = 1"

GRAPHIC SCALE

4" 0" 4" 8"
1/4" = 1"

1' 0' 1' 2' 3'
3/4" = 1'-0"

4' 0' 4' 8'
1/4" = 1'-0"

STANLEY M. O. T. CHING
REGISTERED PROFESSIONAL ENGINEER
No. 6812-C
HAWAII, U.S.A.

THIS WORK WAS PREPARED BY ME OR UNDER MY SUPERVISION

Stanley M.O.T. Ching

DATE	REVISION

STATE OF HAWAII
DEPARTMENT OF TRANSPORTATION
HIGHWAYS DIVISION

SYSTEMS CONDUIT SECTIONS & DETAILS-3

HALAWA TUNNELS

INTERSTATE ROUTE H-3

F.A.I. PROJ. NO. I-H3-1(64)

SCALE: AS NOTED DATE: JUN 1990

SHEET NO. TT8 OF 10 SHEETS

ORIGINAL PLAN		DATE
	SURVEY PLOTTED BY	
	DRAWN BY L. BOLOTIN	6/8/90
	TRACED BY	
NOTE BOOK	PROOFREAD BY D. ANDERSON	6/8/90
	QUANTITIES BY	
No.	CHECKED BY J. SMITH	6/8/90

FED. ROAD DIST. NO.	STATE	FED. AID PROJ. NO.	FISCAL YEAR	SHEET NO.	TOTAL SHEETS
HAWAII	HAW.	I-H3-1(64)	1990	530	531

530

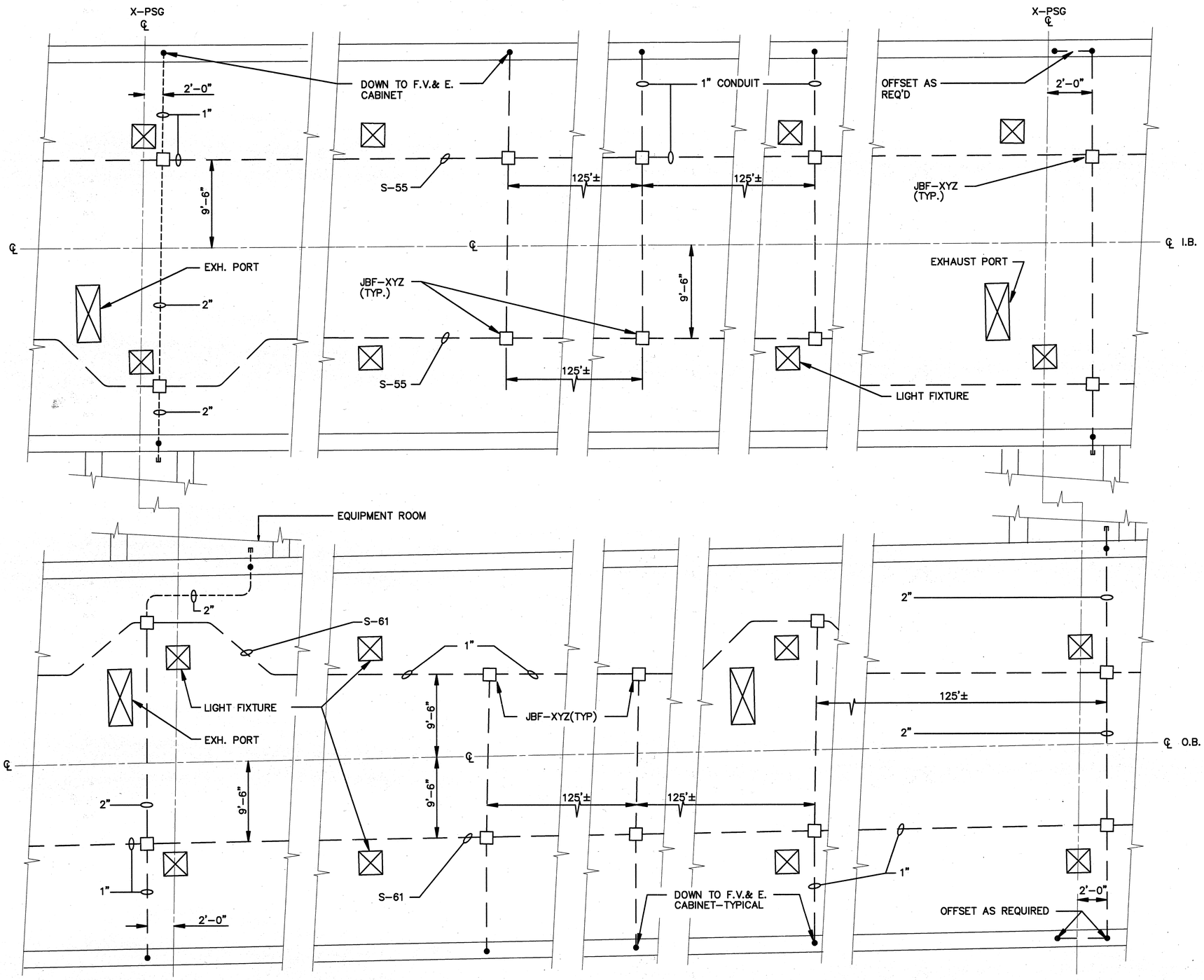

NOTE:
1. X,Y AND Z ARE VARIABLES, SEE PLANS FOR IDENT-IFICATION NUMBERS.

DATE	REVISION

STATE OF HAWAII
DEPARTMENT OF TRANSPORTATION
HIGHWAYS DIVISION

SYSTEMS CONDUIT TYPICAL CEILING PLAN

HALAWA TUNNELS

INTERSTATE ROUTE H-3
F.A.I. PROJ. NO. I-H3-1(64)

STANLEY M. O. T. CHING
REGISTERED PROFESSIONAL ENGINEER
No. 6312-C
HAWAII, U.S.A.

THIS WORK WAS PREPARED BY ME OR UNDER MY SUPERVISION
Stanley M.O.T. Ching

SCALE: NO SCALE DATE: JUN. 1990

SHEET NO. TT9 OF 10 SHEETS

ORIGINAL PLAN		DATE
	SURVEY PLOTTED BY	
	DRAWN BY CADD	06/27/90
	TRACED BY	
	DESIGNED BY W.WILLIAMS	5/26/89
NOTEBOOK	QUANTITIES BY	
No.	CHECKED BY H.SMITH	06/27/90

TT9-H3SC-H3\C1 -06/27/90

FED. ROAD DIST. NO.	STATE	FED. AID PROJ. NO.	FISCAL YEAR	SHEET NO.	TOTAL SHEETS
HAWAII	HAW.	I-H3-4(64)	1990	531	531

CONDUIT SCHEDULE

COND. NO.	CIRC. IDENT.	FROM	TO	SIZE INCHES
1				
2				
3				
4				
5				
6				
7				
8				
9	RO	CB	NEC-1.0	3.00
10	T/IC	CB	NEC-1.0	3.00
11	ID	CB	NEC-1.0	3.00
12	SC	CB	NEC-1.0	3.00
13	FP	CB	NEF-1.0	3.00
14	TC	PBS-1N	PBT-1.1N	2.00
15	SC	PBS-1S	VLV BOX	2.00
16	FP	JBF-1.2S	EQ. RM.	2.00
17	FP	JBF-0.7N	STUB OUT	2.00
18				
19				
20	T/IC	CB	SEC-1.0	3.00
21	ID	CB	SEC-1.0	3.00
22	SC	CB	SEC-1.0	3.00
23	FP	CB	SEF-1.0	3.00
24	TC	PBS-2S	PBT-2.2S	2.00
25	TC	PBS-2N	PBT-2.1N	2.00
26	TC	PBS-2S	PBT-2.1S	2.00
27	TC	PBS-2N	PBT-2.2N	2.00
28	SC	PBS-2S	VLV BOX	2.00
29	FP	JBF-1.7N	STUB OUT	2.00
30				
31				
32				
33				
34	TC	PBS-3S	PBT-3.1S	2.00
35				
36	FP	JBF-2.2S	STUB OUT	2.00
37	FP	JBF-3.2S	STUB OUT	2.00
38	SC	PBS-3S	VLV BOX	2.00
39	FP	JBF-3.1N	EQ. RM.	2.00
40	THRU	50 ARE RESERVED		
51	CO	HHS-21N	HHS-12N	2.00
52				
53	TC	HHS-22N	HHS-12N	2.00
54				
55	FP	JBF-0.1N	JBF-11.1N	1.00
56				
57	FP	JBF-0.2N	JBF-11.2N	1.00
58				
59				
60	CO	HHS-11S	HHS-21S	2.00
61	FP	JBF-0.1S	JBF-11.1S	1.00
62	TC	HHS-12S	HHS-22S	2.00
63	FP	JBF-0.2S	JBF-11.2S	1.00
64	THRU	109 ARE	RESERVED	
110	TC	PBS-1N	PBS-1S	3.00
111	T/IC	PBS-1N	PBS-1S	3.00
112	SC/ID	PBS-1N	PBS-1S	3.00
113	FP	PBS-1N	PBS-1S	3.00
114	CO	PBS-1S	HHS-1S	2.00
115	CO	PBS-1N	HHS-1N	2.00
116	TC	PBS-1S	HHS-1S	2.00
117	TC	PBS-1N	HHS-1N	2.00
118	a-h	PBS-1S	EQ. RM.	3.00
119	a-h	PBS-1S	EQ. RM.	3.00
120	TC	PBS-2N	PBS-2S	3.00
121	T/IC	PBS-2N	PBS-2S	3.00
122	SC/ID	PBS-2N	PBS-2S	3.00
123	FP	PBS-2N	PBS-2S	3.00
124	CO	PBS-2S	HHS-2S	2.00
125	CO	PBS-2N	HHS-2N	2.00
126	TC	PBS-2S	HHS-2S	2.00
127	CO	PBS-2N	HHS-2N	2.00
128				
129				
130	TC	PBS-3N	PBS-3S	3.00
131	T/IC	PBS-3N	PBS-3S	3.00
132	SC/ID	PBS-3N	PBS-3S	3.00
133	FP	PBS-3N	PBS-3S	3.00
134	CO	PBS-3S	HHS-3S	2.00
135	CO	PBS-3N	HHS-3N	2.00
136	TC	PBS-3S	HHS-3S	2.00
137	TC	PBS-3N	HHS-3N	2.00
138	a-h	PBS-3N	EQ. RM.	3.00
139	a-h	PBS-3N	EQ. RM.	3.00
140	THRU	299 ARE	RESERVED	
300				
301	T/IC	NWC-1.0	ROOF	2.00
302	SC/ID	NWC-1.0	ROOF	2.00
303	CO	NWC-1.0	ROOF	2.00
304	RO	NWC-1.0	NWC-2.0	3.00
305	FP	NWF-1.0	ROOF	2.00
306	TC	NWT-1.0	NWT-2.0	2.00
307	TC	NWT-1.1	NWT-2.1	2.00
308	TC	NWT-1.1	NWT-2.1	2.00
309				
310	TC	HHS-22N	NWT-1.0	2.00
320	CO	HHS-21N	NWC-1.0	2.00
330	T/IC	NWC-2.0	STUB OUT	2.00
331	ID	NWC-2.0	STUB OUT	2.00
332	SC	NWC-2.0	STUB OUT	2.00
333	FP	NWC-2.0	STUB OUT	2.00
334				
335				
336				
337				
338				
339				
340	THRU	399 ARE	RESERVED	
400				
401	T/IC	SWC-1.0	ROOF	2.00
402	SC/ID	SWC-1.0	ROOF	2.00
403	CO	SWC-1.0	ROOF	2.00
404	RO	SWC-1.0	SWC-2.0	3.00
405	FP	SWF-1.0	ROOF	2.00
406	TC	SWT-1.0	SWT 2.0	2.00
407	TC	SWT-1.1	SWT-2.1	2.00
408	TC	SWT-1.1	SWT-2.1	2.00
409				
410	CO	HHS-21S	SWC-1.0	2.00
420	TC	HHS-22S	SWT-1.0	2.00
430	T/IC	SWC-2.0	STUB OUT	2.00
431	ID	SWC-2.0	STUB OUT	2.00
432	SC	SWC-2.0	STUB OUT	2.00
433	FP	SWF-2.0	STUB OUT	2.00
434				
435				
436				
437				
438				
439				
440	THRU	899 ARE	RESERVED	
900	TC	NWT-1.0	PBS-50	3.00
901	TC	PBS-50	PBS-51	3.00
902	CO	PBS-19N	PBS-20	3.00
903	TC	PBS-51	PBS-52	3.00
904	TC	PBS-52	PBS-21	3.00
905	CO	PBS-20	VMS BASE	3.00
906	TC	PBS-21	VMS BASE	3.00
907	CO	VMS BASE	SIG BASE	3.00
908	TC	VMS BASE	SIG BASE	3.00
909	CO	PBS-20	PBS-22	3.00
910	TC	PBS-21	PBS-23	3.00
911	CO	PBS-22	PBS-24	3.00
912	TC	PBS-23	PBS-25	3.00
913	CO	PBS-24	PBS-32	3.00
914	TC	PBS-25	PBS-31	3.00
915	SP	PBS-28	SG-01	2.00
916	SP	PBS-42	SG-01	2.00
917	TC	PBS-25	PBS-28	2.00
918	TC	PBS-25	PBS-30	3.00
919	CO	PBS-24	PBS-29	3.00
920	TC	PBS-30	SWT-1.0	3.00
921	CO	PBS-29	SWC-1.0	3.00
922	TC	PBS-25	HHS-60	3.00
923	CO	PBS-24	HHS-59	3.00
924	TC	HHS-60	PBS-34	3.00
925	CO	HHS-59	PBS-33	3.00
926	TC	CON CEN	PBS-52	3.00
927	TC	CON CEN	PBS-52	3.00
928	CO	PBS-22	SC BASE	3.00
929	TC	PBS-23	SC BASE	3.00
930	CO	PBS-24	VAULT	3.00
931	TC	PBS-52	CB	3.00
932	TC	PBS-30	SG-02	2.00
933	TC	PBS-25	VAULT	3.00
934	TEL	PBS-26	PBS-27	2.00
935	TEL	PBS-26	PBS-27	2.00
936	TEL	PBS-27	PBS-46	2.00
937	TEL	PBS-27	PBS-46	2.00
938	TEL	PBS-46	CB	2.00
939	TEL	PBS-46	CB	2.00
940	TC	SWT-1.0	CB	3.00
941	TC	SWT-1.0	CB	3.00
942	TC	SWT-1.0	CB	3.00
943	TC	SWT-1.0	CB	3.00
960	CO	HHS-21S	HHS-55	3.00
961	TC	HHS-22S	HHS-54	3.00
962	TC	HHS-54	HHS-56	3.00
963	CO	HHS-55	HHS-57	3.00
964	TC	HHS-56	HHS-58	3.00
965	CO	HHS-57	PBS-35	3.00
966	TC	HHS-58	PBS-36	3.00
967	CO	PBS-40	PBS-45	3.00
968	TC	PBS-41	PBS-44	3.00
969	TC	PBS-34	PBS-37	3.00
970	CO	PBS-33	PBS-45	3.00
971	TC	PBS-37	PBS-44	3.00
972	TC	PBS-41	SIG BAS	3.00
973	CO	PBS-40	SIG BAS	3.00
974	TC	PBS-44	594+45	3.00
975	CO	PBS-45	594+45	3.00
976	CO	PBS-35	PBS-40	3.00
977	TC	PBS-36	PBS-38	3.00
978	TC	PBS-38	PBS-39	3.00
979	TC	PBS-39	PBS-41	3.00
980	TC	PBS-44	TC BASE	3.00
981	CO	PBS-45	TC BASE	3.00
982	CO	SC BASE	SIGN BASE	3.00
983	CO	TC BASE	SIGN BASE	3.00
984	TC	PBS-41	594+45	3.00
985	CO	PBS-40	594+45	3.00
986	TC	PBS-44	SC BASE	2.00
987	CO	PBS-45	SC BASE	3.00
988				
989				
990	THRU	1064 ARE	RESERVED	
1065	CO	PBS-24	599+95	3.00
1066	TC	PBS-25	599+95	3.00
1067	TEL	PBS-26	599+95	2.00
1068	TEL	PBS-26	599+95	2.00
1069	CO	PBS-32	599+95	3.00
1070	TC	PBS-31	599+95	3.00
944	PW	PBS-44.1	SC-03	1.00
957	PW	PBS-44.1	TC-03	1.00

PULL BOX SCHEDULE

INDENTIFICATION NUMBER	TYPE	SIZE	SHEET LOCATION	QTY
CBS-2.0, CBT-2.0 & SWC-1.0	1,3,4	30"X30"X24"	TC2	3
PBS 1N - 3N & PBS 1S - 3S	SPECIAL	54"x48"x30"	TT1-TT4, TT6, TT7	6
PBS-19N	6	30"X30"X12"	TC1	1
PBS 22-41	2	48"X32"X26"	TA1,TA2, TA3 & TA6	20
PBS-20,21,50,51, 52 & 46	6	24"X24"X12"	TC1, TA2, TA3 & TA6	6
HHS 1N-3N & HHS 1S-3S	1,3,4	18"X16"X18"	TT1-TT3	6
HHS 21N, 22N, 21S, 22S, 55S, 57S & 59S	6	18"X10"X6"	TN1, TA2	7
HHS-54S, 56S, 58S & 60S	6	24"X8"X8"	TA2	4
NWC 1.0	6	30"X30"X24"	TN1, TN6, TN7	1
SWT 1.0	1,3,4	30"X30"X18"	TO1, TO6	1
NWT 1.0	1,3,4	18"X18"X9"	TN1,TN6	1
SWC 2.0-4.0 & NWC 2.0-4.0	5	16"X16"X12"	TN2 - TN6 & TO2 - TO6	6
SWF 2.0-4.0 & NWF 2.0 - 4.0	5	16"x10"x12"	TN2 - TN6 & TO2 - TO6	6
SWT 1.1, 1.2 & NWT 1.1, 1.2	1	8"X8"X8"	TN1 - TN6 & TO1 - TO6	4
SWT 2.0, 2.1 & NWT 2.0, 2.1	5	16"x10"x12"	TN2 - TN6 & TO2 - TO6	4
PBT 1.1N, 2.1N & 2.2N	6	6"x6"x4"	TT1 & TT2	3
PBT 2.1S, 2.2S & 3.1S	6	6"x6"x4"	TT2 & TT3	3
PBC 1.1N-1.3N, 2.1N, 2.2N & 3.1N-3.3N	6	4"x4"x3"	TT1-TT3	8
PBC 1.1S-1.3S, 2.1S, 2.2S & 3.1S-3.3S	6	4"x4"x3"	TT1-TT3	8
JBF 0.7N, 0.8N , 3.1N & 3.2N	6	12"x12"x4"	TT1 & TT3	4
JBF 1.1S, 1.2S, 3.1S, &3.2S	6	12"x12"x4"	TT1 & TT3	4
JBF 0.1N-0.6N & 0.1S-0.8S	6	8"x8"x4"	TA3, TT1, TN1, TO1	14
JBF 1.1N-1.8N, 2.1N-2.6N & 3.3N-3.6N	6	8"x8"x4"	TT1 - TT3	18
JBF 1.3S-1.8S, 2.1S-2.8S &3.3S-3.6S	6	8"x8"x4"	TT1 - TT3	18

ORIGINAL PLAN		DATE
SURVEY PLOTTED BY		
DRAWN BY	G.KOO	6/27/90
TRACED BY		
TYPED BY	W.WILLIAMS	6/26/89
QUANTITIES BY		
CHECKED BY	H.SMITH	6/27/90
NOTEBOOK		
No.		

DATE	REVISION
12/20/94	REV. PER DCN 64-072

STANLEY M. O. T. CHING
REGISTERED PROFESSIONAL ENGINEER
No. 6312-C
HAWAII, U.S.A.

THIS WORK WAS PREPARED BY ME OR UNDER MY SUPERVISION

Stanley M.O.T. Ching

STATE OF HAWAII
DEPARTMENT OF TRANSPORTATION
HIGHWAYS DIVISION

SYSTEMS CONDUIT SCHEDULES

HALAWA TUNNELS

INTERSTATE ROUTE H-3

F.A.I. PROJ. NO. I-H3-1(64)

SCALE: NONE DATE: JUN. 1990

SHEET NO. TT10 OF 10 SHEETS

TT10H3SC -H3/C1 -06-28-90

FED. ROAD DIST. NO.	STATE	FED. AID PROJ. NO.	FISCAL YEAR	SHEET NO.	TOTAL SHEETS
HAWAII	HAW.	I-H3-1(64)	1990	531S-1	531

64

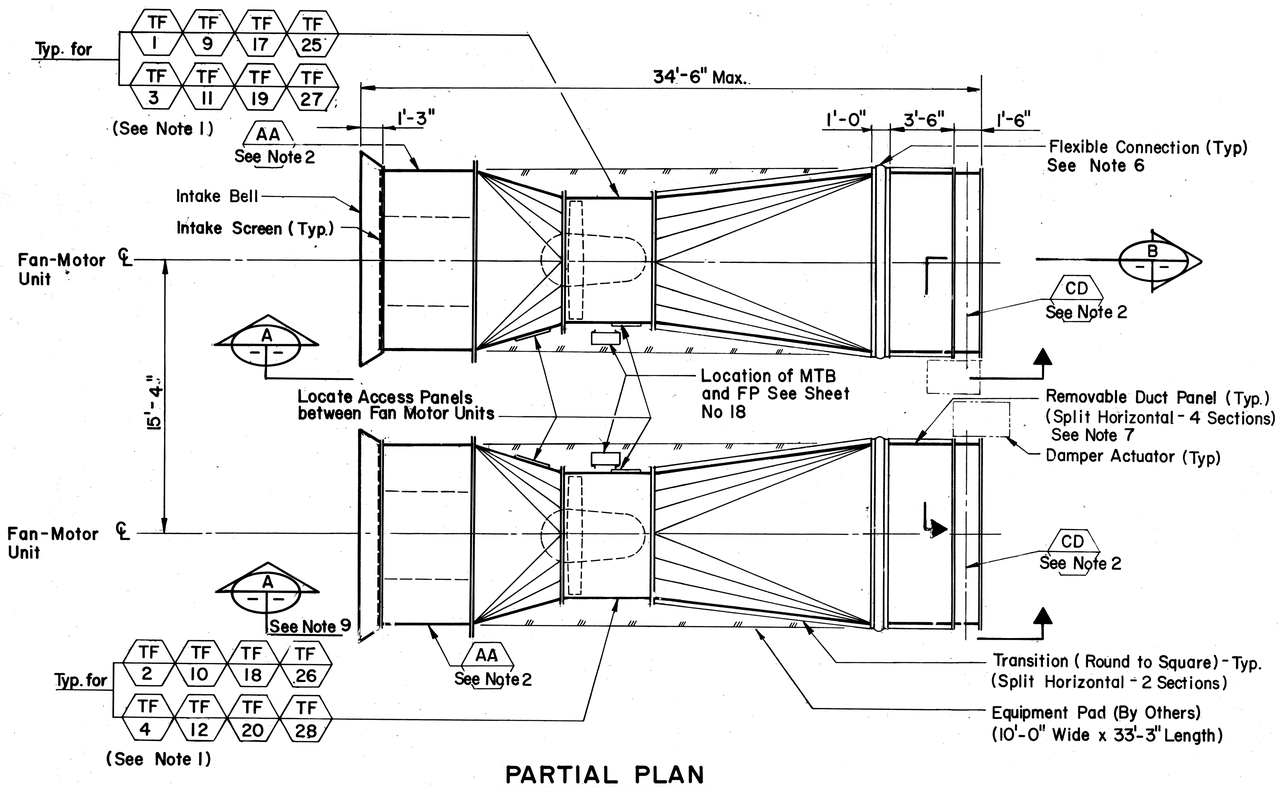

PARTIAL PLAN
SUPPLY FAN ASSEMBLIES

Scale: 1/4"= 1'-0"

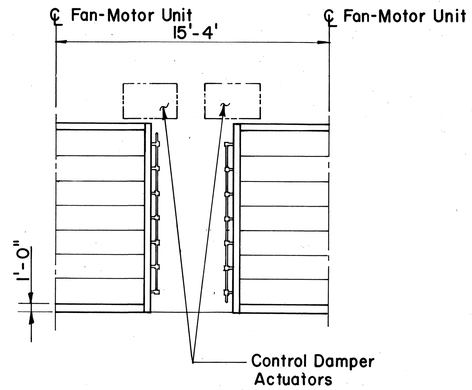

SECTION B

Scale: 1/4"= 1'-0"

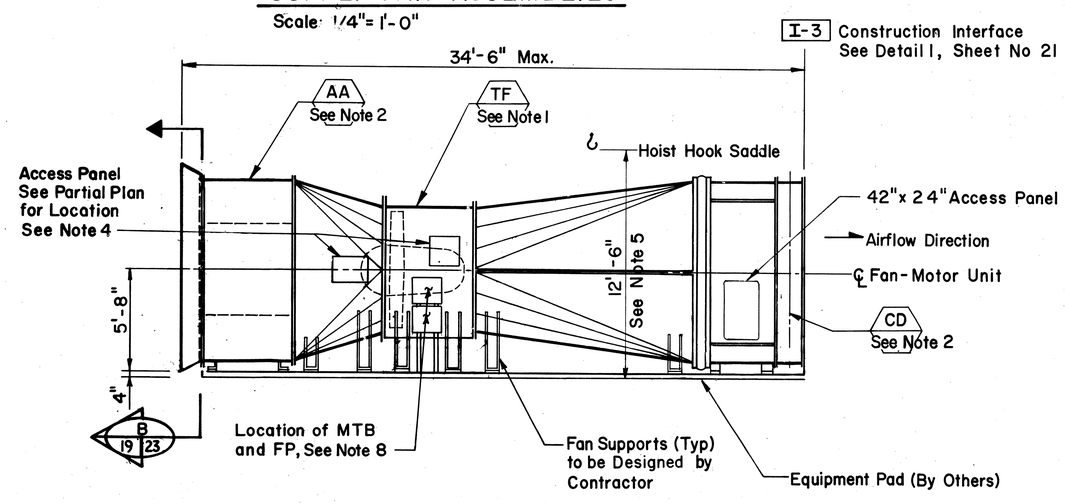

SECTION A

Scale: 1/4"= 1'-0"

NOTES

1. For the Location of Each Fan-Motor Unit, See Plan Sheet No's: 8 through 15.
2. Equipment Numbering is Identified in the Equipment Schedules with an Associated Fan Motor Unit. See Tunnel Ventilation Equipment Schedule, Sheet No. 17.
3. For Symbols and Abbreviations, See Sheet No. 4.
4. Access Panels on Fans Casing and Transition Ductwork shall be provided for (1) Blade and Hub Inspection and (2) Blade Adjustments. Access Panels shall be Sized and Located by the Contractor
5. Maximum Hook Height for Servicing the Fan-Motor Units Shall be 12'-6". Hook is Part of Monorail Hoist to be Centered over Fan-Motor Assembly and Installed at a Future Date.
6. Locate Flexible Connection between Fan Casing and Construction Interface. Flexible Connection shall be Sized and Located by the Contractor.
7. Removable Duct Panel shall Permit Removal of Damper Assembly without Moving Actuator. Damper shall be Removed in Access Space between Fan-Motor Units.
8. Motor Terminal Box (MTB) and Fan Panel (FP) shall be Freestanding and Sized and Located by Contractor. Support Box and Panel from Pair of Galvanized Channels Anchored to Equipment Pad.
9. Section is Similar to Section A Except for Location of Damper Actuator, Access Panels, MTB and FP.

		DATE
SURVEY PLOTTED BY		
DRAWN BY	B. HARDENBROOK	11/15/89
TRACED BY		
DESIGNED BY	R. MATRISIAN	10/31/89
QUANTITIES BY		
CHECKED BY	J. QUE	11/4/89

ORIGINAL PLAN
NOTE: BOOK No.

FOR REFERENCE ONLY

JOHN N. QUE
REGISTERED PROFESSIONAL ENGINEER
No. 6503-M
HAWAII, U.S.A.

THIS WORK WAS PREPARED BY ME OR UNDER MY SUPERVISION

GRAPHIC SCALE:
1 2 3 4 8 16
1/4"= 1'-0"

STATE OF HAWAII
DEPARTMENT OF TRANSPORTATION
HIGHWAYS DIVISION

SUPPLY FAN
PLAN & SECTIONS
F & I VENTILATION FANS

INTERSTATE ROUTE H-3
F.A.I PROJ. NO. I-H3-1 (60)

SCALE: 1/4"=1'-0" DATE: NOV 1989

SHEET No. 19 OF 24 SHEETS

531S-1

FED. ROAD DIST. NO.	STATE	FED. AID PROJ. NO.	FISCAL YEAR	SHEET NO.	TOTAL SHEETS
HAWAII	HAW.	I-H3-1(64)	1990	531S-2	531

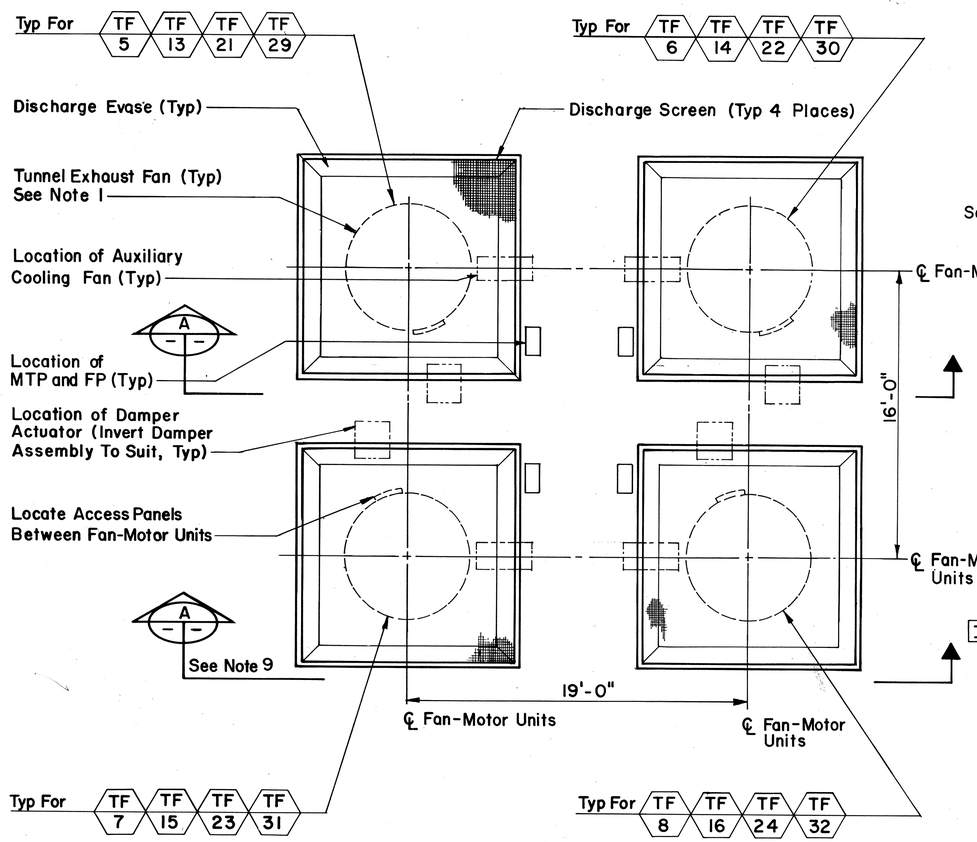

PARTIAL PLAN - ROOF LEVEL
EXHAUST FAN ASSEMBLIES

Scale: 1/4"= 1'-0"

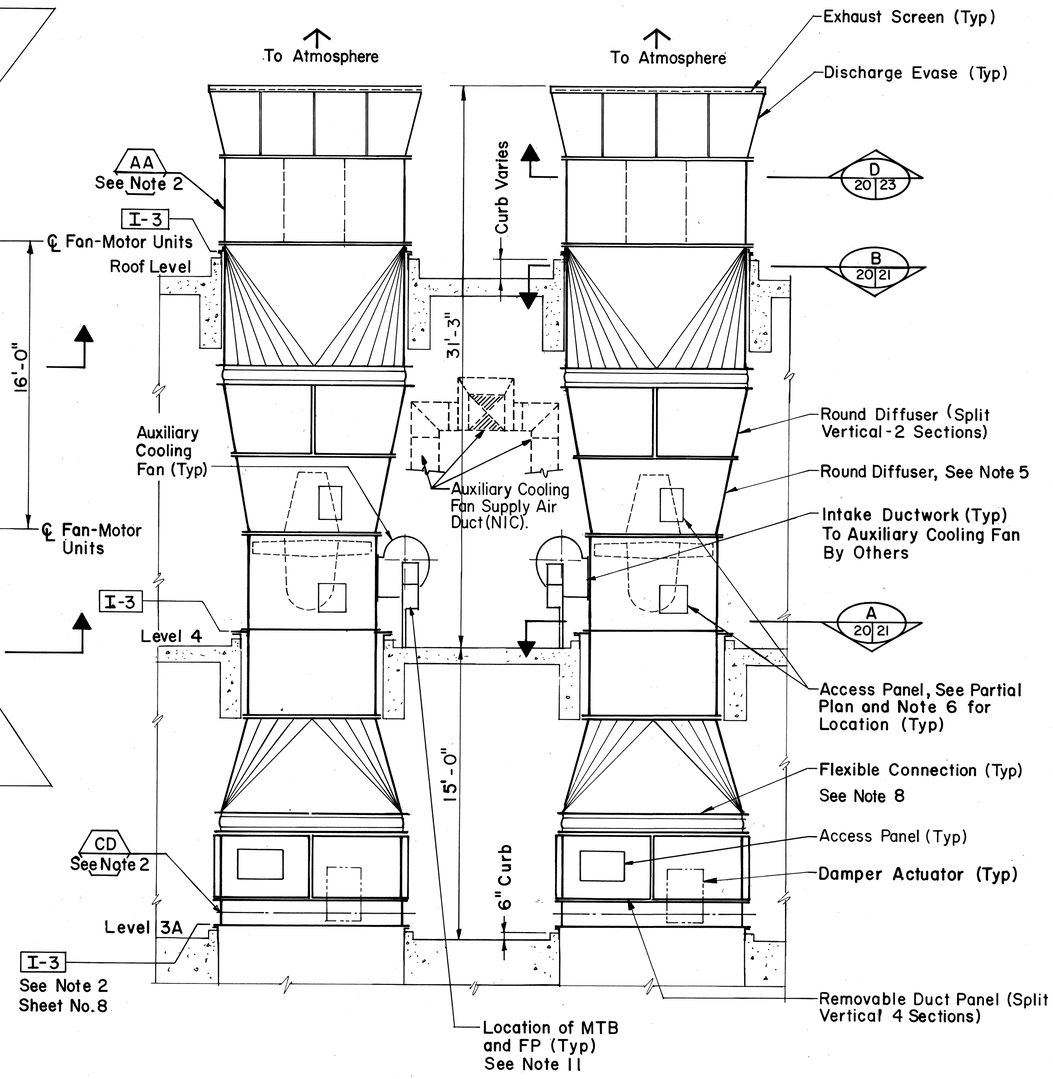

SECTION A

Scale: 1/4" = 1'- 0"

NOTES

1. For the Location of Each Fan-Motor Unit, See Plan Sheet No's 8 through 15.
2. Equipment Numbering is Identified in the Equipment Schedules With an Associated Tunnel Ventilation Fan. See Sheet No. 17.
3. Each Exhaust Fan Shall Have an Impeller Located Above the Motor to Facilitate Its Removal.
4. Equipment Length Shall Suit Fan Selection. Equipment Diameter Shall Be 98 Inches Maximum.
5. Each Round Diffuser Shall Have Straightening Vanes and a Discharge Fan Hub.
6. Access Panels on Fan Casing and Transition Ductwork Shall Be Provided For (1) Blade and Hub Inspection and (2) Blade Adjustment. Access Panels Shall Be Sized and Located By Contractor.
7. For Symbols and Abbreviations See Sheet No. 4.
8. Flexible Connections Shall be Sized and Located by the Contractor.
9. Section is Similar to Section A Except for Location of Damper Actuator, Access Panels, MTB and FP.
10. Sway Bracing Shall be Sized and Located by the Contractor.
11. Motor Terminal Box (MTB) and Fan Panel (FP) Shall be Sized by Contractor.

		DATE
ORIGINAL PLAN	SURVEY PLOTTED BY	
	DRAWN BY	B. HARDENBROOK 11/2/88
NOTE BOOK	TRACED BY	
	DESIGNED BY	R. MATRISIAN 09/31/88
No.	QUANTITIES BY	
	CHECKED BY	J. QUE 1/4/89

GRAPHIC SCALE:
1 2 3 4 8 16
1/4"= 1'- 0"

JOHN N. QUE
REGISTERED PROFESSIONAL ENGINEER
No. 6503-M
HAWAII, U.S.A.

THIS WORK WAS PREPARED BY ME OR UNDER MY SUPERVISION

FOR REFERENCE ONLY

STATE OF HAWAII
DEPARTMENT OF TRANSPORTATION
HIGHWAYS DIVISION

EXHAUST FAN
PLAN & SECTION
F & I VENTILATION FANS

INTERSTATE ROUTE H-3
F.A.I. PROJ. NO. I-H3-1 (60)

SCALE: 1/4"= 1'-0" DATE: NOV 1989

SHEET No. 20 OF 24 SHEETS