FED. ROAD DIST. NO.	STATE	PROJ. NO.	FISCAL YEAR	SHEET NO.	TOTAL SHEETS
HAWAII	HAW.	HWY-0-07-16	2020	20	22

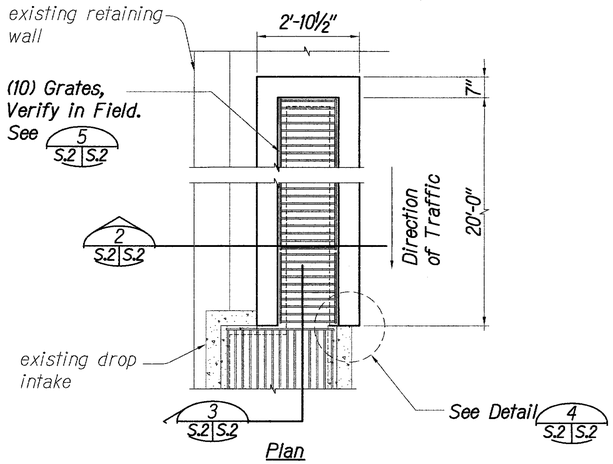

TRENCH DRAIN PLAN VIEW 1 S.2 S.2
Scale : 1/2" = 1'-0"

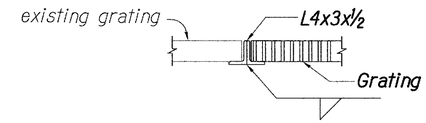

DETAIL C S.2 S.2
NOT TO SCALE

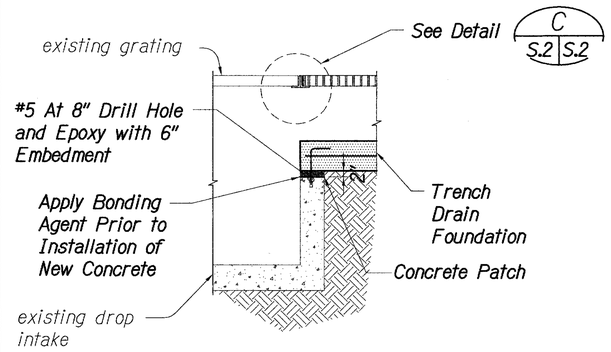

SECTION 3 S.2 S.2
Scale : 1/2" = 1'-0"

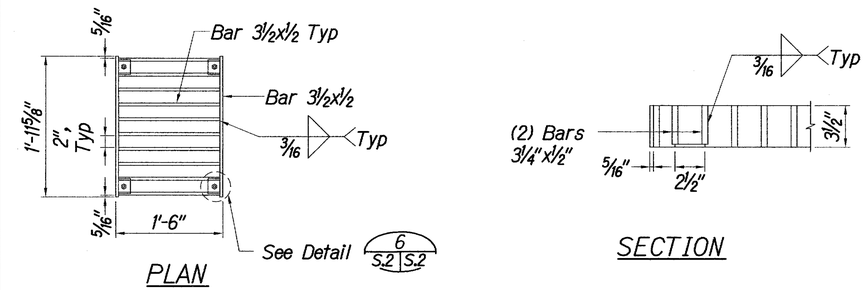

GRATING DETAIL 5 S.2 S.2
NOT TO SCALE

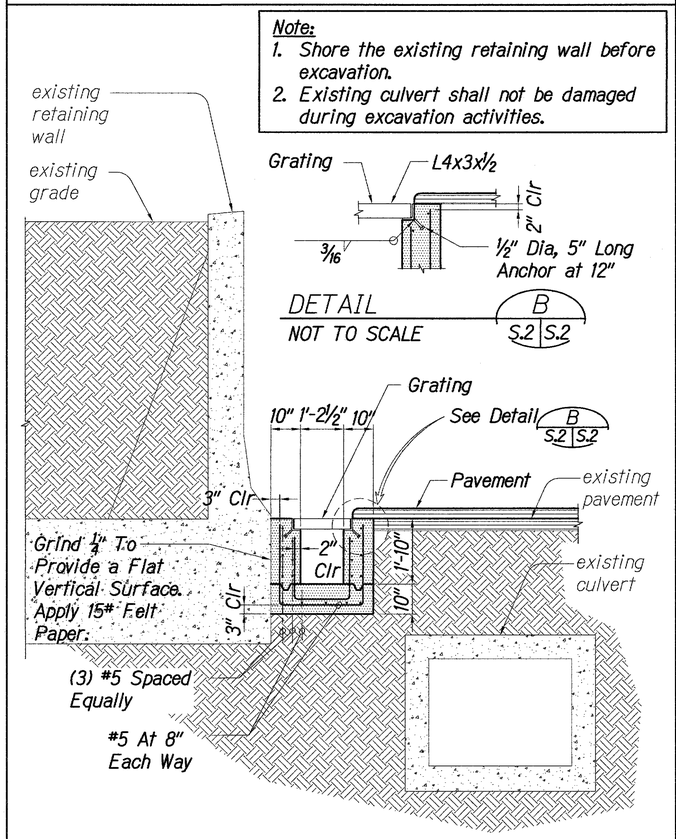

DETAIL B S.2 S.2
NOT TO SCALE

SECTION 2 S.2 S.2
Scale : 1/2" = 1'-0"

Note:
1. Shore the existing retaining wall before excavation.
2. Existing culvert shall not be damaged during excavation activities.

Note:
Grating not shown for clarity

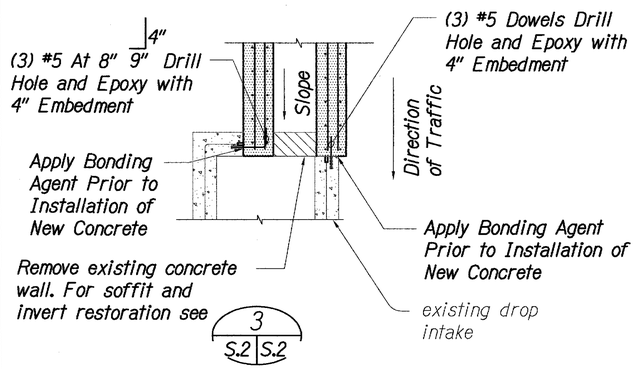

TRENCH DRAIN CONNECTION TO EXISTING DRAIN INTAKE PLAN VIEW 4 S.2 S.2
Scale : 1/2" = 1'-0"

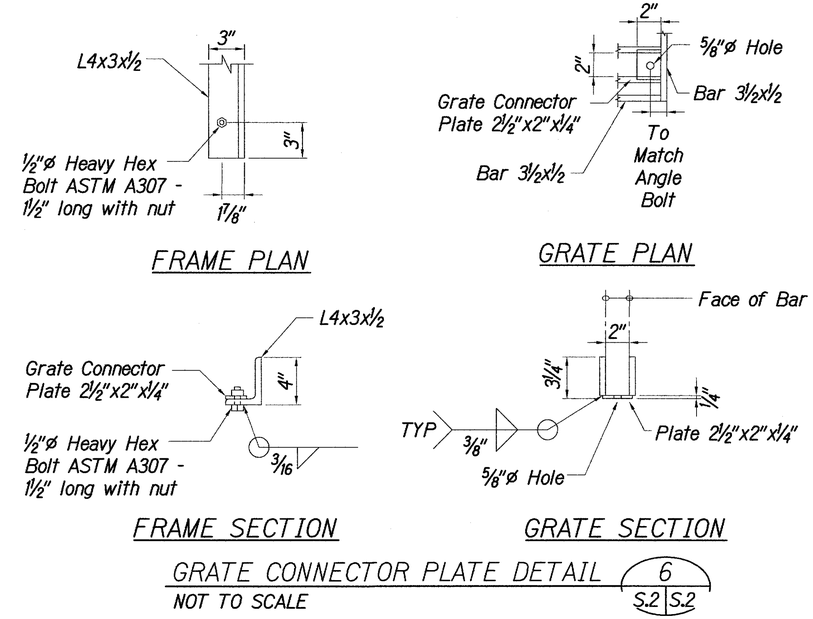

GRATE CONNECTOR PLATE DETAIL 6 S.2 S.2
NOT TO SCALE

ORIGINAL PLAN	SURVEY PLOTTED BY	DATE
	DRAWN BY	
	TRACED BY	
NOTE BOOK	DESIGNED BY	
	QUANTITIES BY	
No.	CHECKED BY	

KEN KAZUO HAYASHIDA
LICENSED PROFESSIONAL ENGINEER
No. 6818-S
HAWAII, U.S.A.

LICENSE EXPIRES 4/30/20

THIS WORK WAS PREPARED BY ME OR UNDER MY SUPERVISION

STATE OF HAWAII
DEPARTMENT OF TRANSPORTATION
HIGHWAYS DIVISION

H-201 TRENCH DRAIN DETAILS

DRAINAGE IMPROVEMENTS AT VARIOUS LOCATIONS
Interstate Route H-201, Vicinity of Fort Shafter Off-Ramp and Ala Napunani Street, Vicinity of Ala Aolani Street
Project No. HWY-0-07-16

Date: June 2019

SHEET No. S.2 OF 4 SHEETS

D:\3565 DOT-General Hydraulic Design Engineering, Statewide\004 Drawings\Structural\AutoCAD_format\2019-10-07_3565\3565_S-2.dwg, 10/25/2019 1:08:55 PM,