FED. ROAD DIST. NO.	STATE	PROJ. NO.	FISCAL YEAR	SHEET NO.	TOTAL SHEETS
HAWAII	HAW.	HWY-0-07-16	2020		22

Note:
Wall reinforcing not shown for clarity.

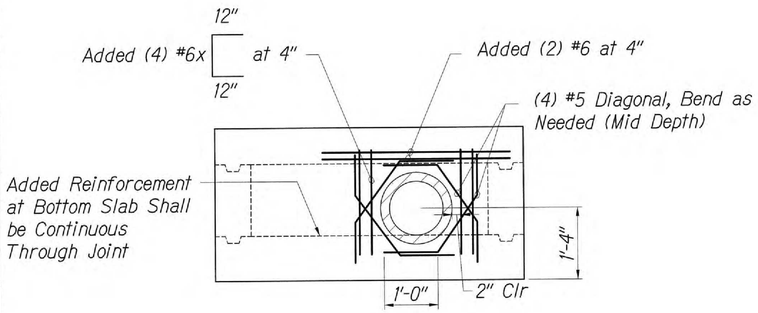

PIPE PENETRATION DETAIL (1 / S.4 | S.4)
Scale: 3/4" = 1'-0"

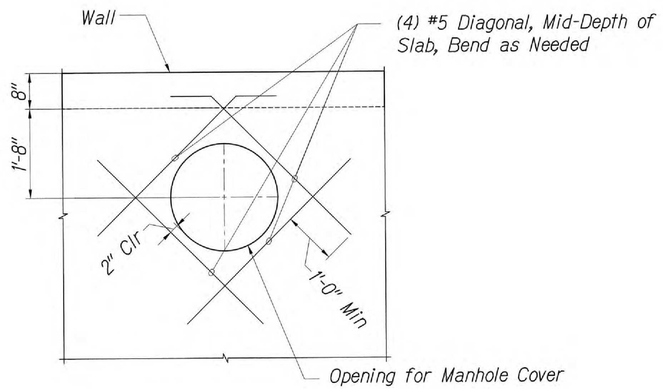

TOP SLAB PENETRATION DETAIL (2 / S.4 | S.4)
Scale: 3/4" = 1'-0"

Note:
Catch Basin Reinforcing Not Shown for Clarity.

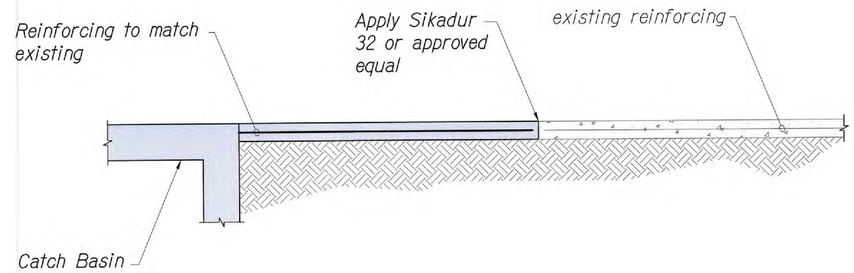

SIDEWALK REPAIR DETAIL (3 / S.4 | S.4)
Scale: 3/4" = 1'-0"

ORIGINAL PLAN	SURVEY PLOTTED BY	DATE
	DRAWN BY	"
NOTE BOOK	TRACED BY	"
	DESIGNED BY	"
	QUANTITIES BY	"
No.	CHECKED BY	"

AS BUILT
HENRY'S EQUIPMENT RENTAL & SALES, INC.
SIGNATURE 9/20/21 DATE

KEN KAZUO HAYASHIDA
LICENSED PROFESSIONAL ENGINEER
No. 6818-S
HAWAII, U.S.A.

LICENSE EXPIRES 4/30/20

THIS WORK WAS PREPARED BY ME OR UNDER MY SUPERVISION

11/02/20	2	Replace Entire Sheet

STATE OF HAWAII
DEPARTMENT OF TRANSPORTATION
HIGHWAYS DIVISION

ALA NAPUNANI STREET CATCH BASIN DETAILS

DRAINAGE IMPROVEMENTS AT VARIOUS LOCATIONS
Interstate Route H-201, Vicinity of Fort Shafter Off-Ramp and Ala Napunani Street, Vicinity of Ala Aolani Street
Project No. HWY-0-07-16

Date: June 2019

SHEET No. 2 OF 2 SHEETS

C.O. 22

2

3565.01 DOT Moanalua Freeway and Ala Aolani Street Drainage Improvements\004 Drawings\Structural\AutoCAD_format\2020-10-28_3565-01 Catch Basin\3565_S-4 Updated Drainage Details 2020-10-22.dwg, 11/4/2020 12:26:35 PM, csakamoto

FED. ROAD DIST. NO.	STATE	PROJ. NO.	FISCAL YEAR	SHEET NO.	TOTAL SHEETS
HAWAII	HAW.	HWY-0-07-16	2020	22	22

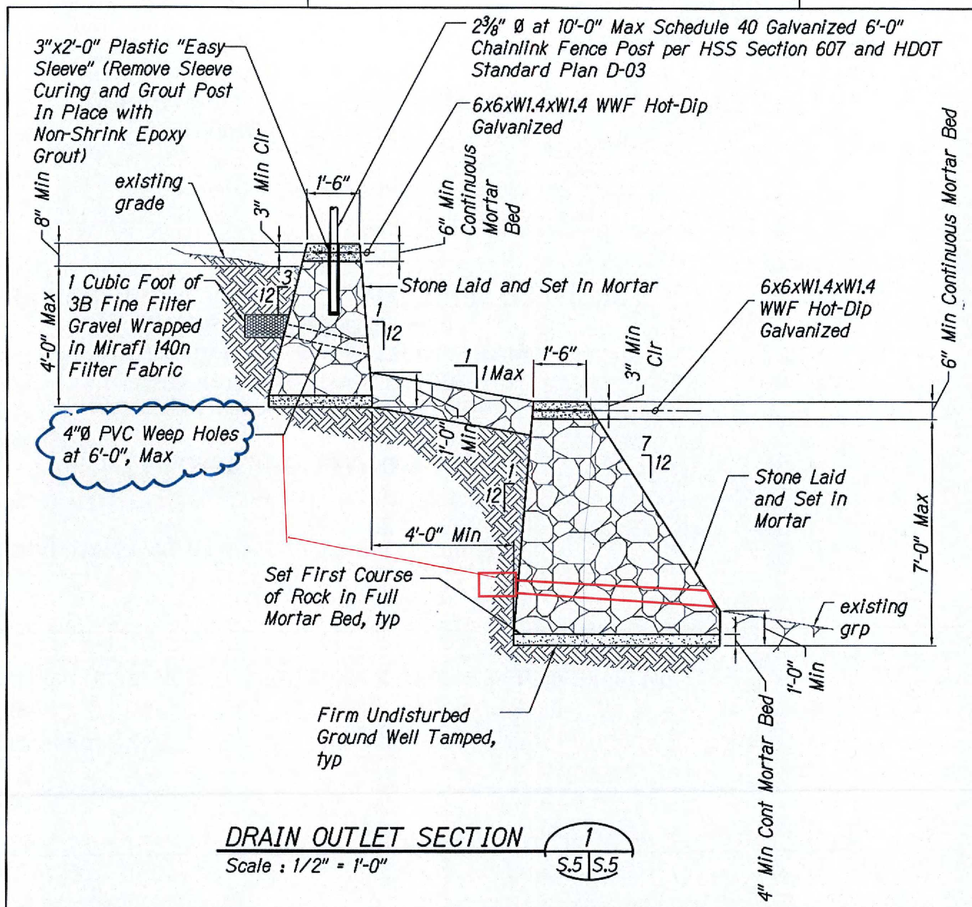

DRAIN OUTLET SECTION 1 (S.5 | S.5)
Scale : 1/2" = 1'-0"

Note:
CRM Wall beyond not shown for clarity

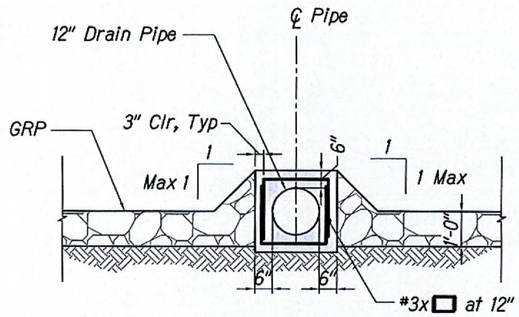

DRAIN OUTLET SECTION 2 (S.5 | S.5)
Scale : 1/2" = 1'-0"

~~Note:~~
~~For CRM wall details see 1/S.4~~

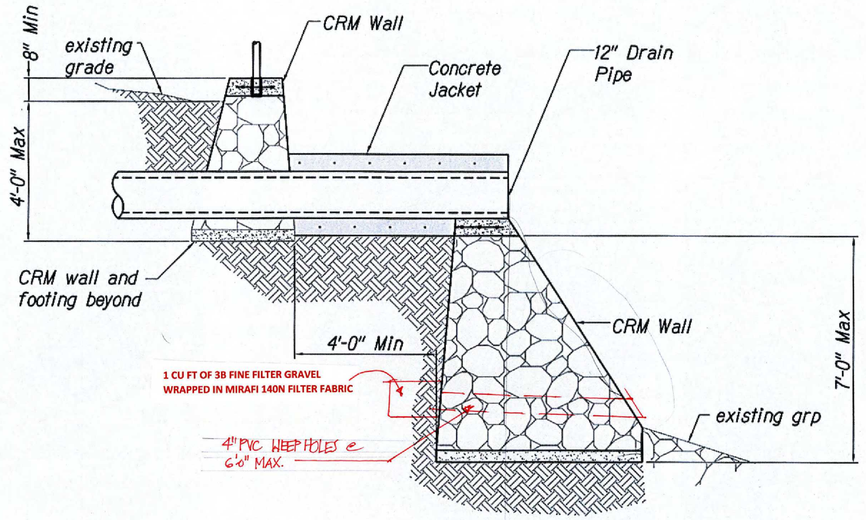

DRAIN OUTLET SECTION - AT PIPE 3 (S.5 | S.5)
Scale : 1/2" = 1'-0"

AS BUILT
HENRY'S EQUIPMENT RENTAL & SALES, INC
SIGNATURE 9/20/21 DATE

04/27/21	3	Revised Sheet for CRM Wall

STATE OF HAWAII
DEPARTMENT OF TRANSPORTATION
HIGHWAYS DIVISION

DRAIN PIPE AND CRM WALL DETAILS

DRAINAGE IMPROVEMENTS AT VARIOUS LOCATIONS
Interstate Route H-201, Vicinity of Fort Shafter Off-Ramp and Ala Napunani Street, Vicinity of Ala Aolani Street
Project No. HWY-0-07-16

Date: June 2019

KEN KAZUO HAYASHIDA
LICENSED PROFESSIONAL ENGINEER
No. 6618-S
HAWAII, U.S.A.

LICENSE EXPIRES 4/30/22

THIS WORK WAS PREPARED BY ME OR UNDER MY SUPERVISION

SHEET No. S.5 OF S.5 SHEETS

C.O. 23

3

RFI 15

ORIGINAL PLAN
NOTE BOOK No.
SURVEY PLOTTED BY
DRAWN BY
TRACED BY
DESIGNED BY
QUANTITIES BY
CHECKED BY
DATE