FED. ROAD DIST. NO.	STATE	PROJ. NO.	FISCAL YEAR	SHEET NO.	TOTAL SHEETS
HAWAII	HAW.	HWY-0-07-16	2020	13	22

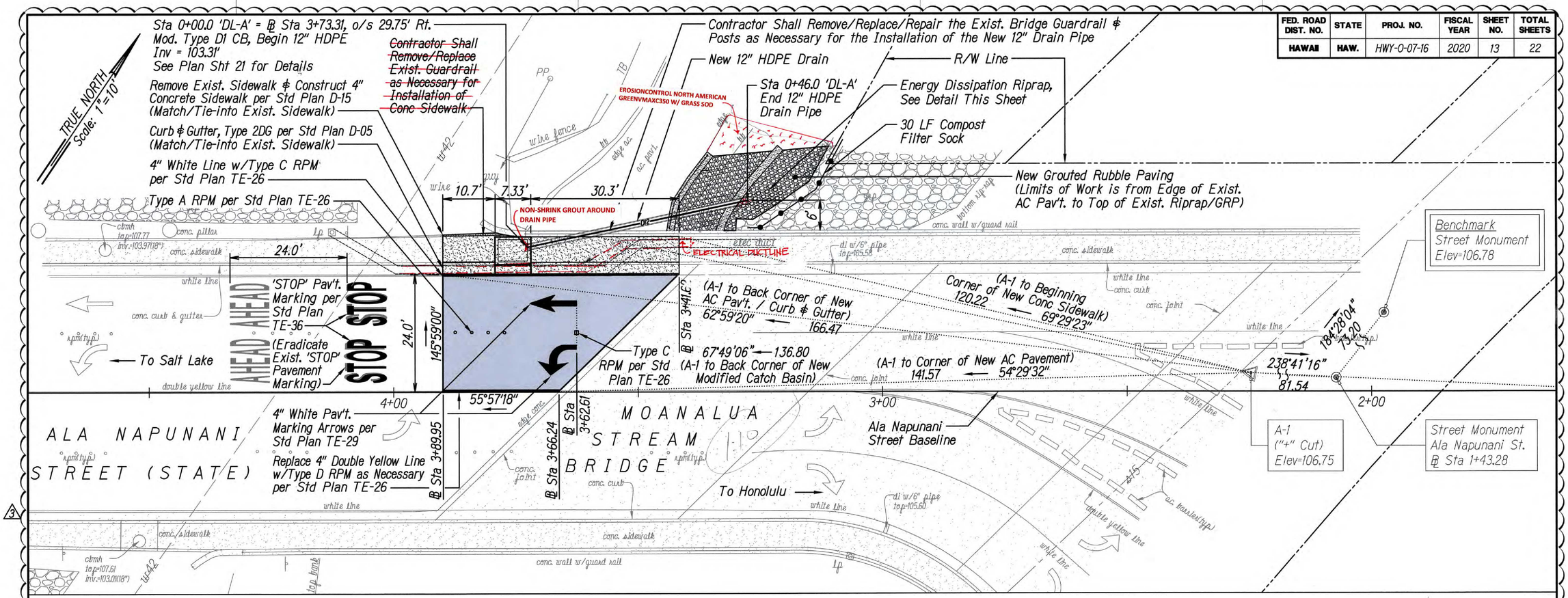

Notes:

1. Contractor shall provide shoring for structure and drain pipe installation.
2. During cold planing, resurfacing, and restriping work, prevent storm water runoff from entering drain inlets.
3. Contractor shall exercise extreme caution when working over Moanalua Stream. Contractor shall prevent any construction materials/ debris from falling into the stream, and shall immediately clean up any accidental material that has fallen into the stream.
4. The cost for shoring and removal of any materials accidentally falling into Moanalua Stream is incidental to the price of various items.

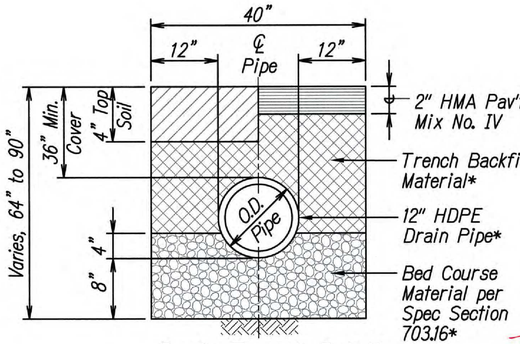

Drain Trench Detail
Not to Scale

* Drain Trench Detail Notes:

1. Trench backfill material and topsoil shall be paid for under contract Item No. 206.0200 - Excavation for Catch Basin, Culvert and Manhole.
2. Bed course material shall be paid for under contract Item No. 603.0200 - Bed Course Material for Culvert.
3. 12-inch drain pipe shall be paid for under contract Item No. 603.0210 - 12-Inch HDPE Pipe.

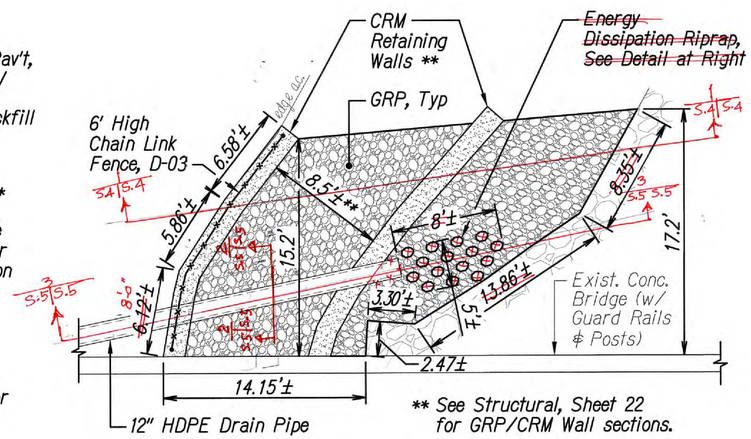

Grouted Rubble Paving Plan
Not to Scale

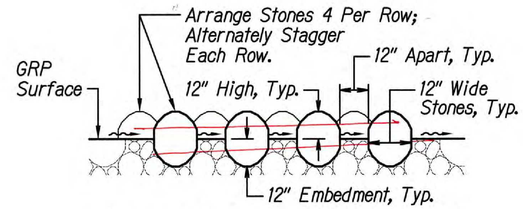

~~Energy Dissipation Riprap Detail~~
~~Not to Scale~~

4/27/21	3	Replaced Entire Sheet
11/04/20	2	Replaced Entire Sheet

STATE OF HAWAII
DEPARTMENT OF TRANSPORTATION
HIGHWAYS DIVISION

ALA NAPUNANI STREET SITE PLAN

DRAINAGE IMPROVEMENTS AT VARIOUS LOCATIONS
Interstate Route H-201, Vicinity of Fort Shafter Off-Ramp and Ala Napunani Street, Vicinity of Ala Aolani Street
Project No. HWY-0-07-16

Date: June 2019

SHEET No. 1 OF 1 SHEETS

MINGXUN DING
LICENSED PROFESSIONAL ENGINEER
NO. 9246-C
HAWAII, U.S.A.

LICENSE EXPIRES 4/30/22

THIS WORK WAS PREPARED BY ME OR UNDER MY SUPERVISION

AS BUILT
HENRY'S EQUIPMENT RENTAL & SALES, INC.
10/29/21 RK
SIGNATURE DATE

ORIGINAL PLAN | SURVEY PLOTTED BY | DRAWN BY | TRACED BY | DESIGNED BY | QUANTITIES BY | CHECKED BY | DATE
NOTE BOOK No.

C.O. 13