FED. ROAD DIST. NO.	STATE	PROJ. NO.	FISCAL YEAR	SHEET NO.	TOTAL SHEETS
HAWAII	HAW.	HWY-0-07-16	2020		22

Note:
Place new drain pipe between existing metal railing posts.

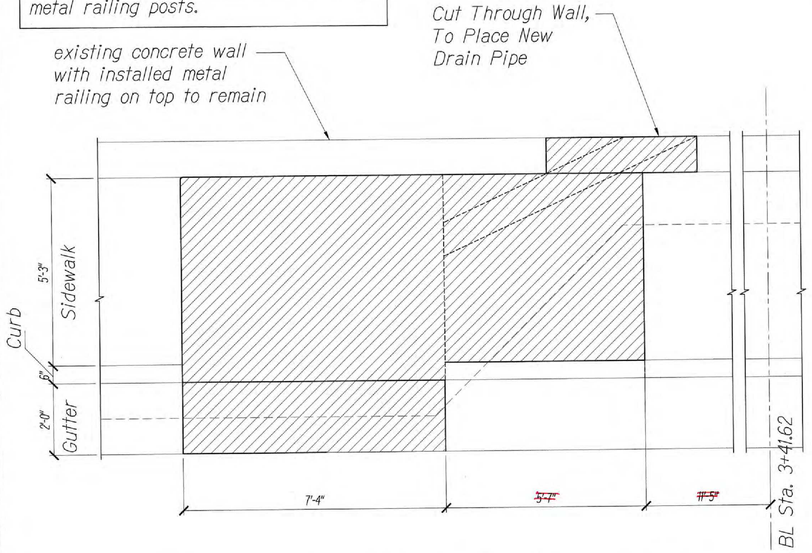

SIDEWALK DEMOLITION-PLAN VIEW (1 / S.3 | S.3)
Scale : 1/2" = 1'-0"

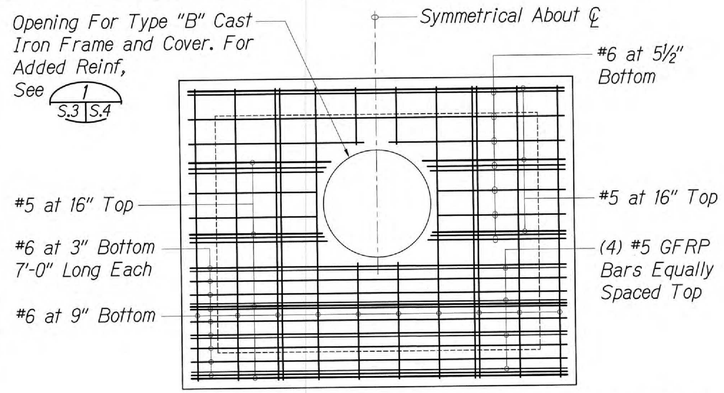

TOP SLAB REINFORCMENT (3 / S.3 | S.3)
Scale : 3/4" = 1'-0"

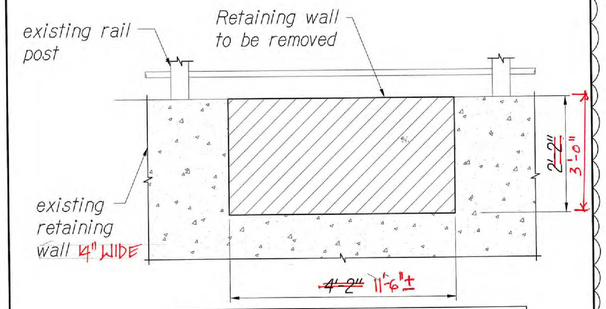

Note:
1. ~~Salvage existing reinforcing~~

Legend
Indicates Components to be Demolished

Retaining Wall Demo (6 / S.3 | S.3)
Scale : 3/4" = 1'-0"

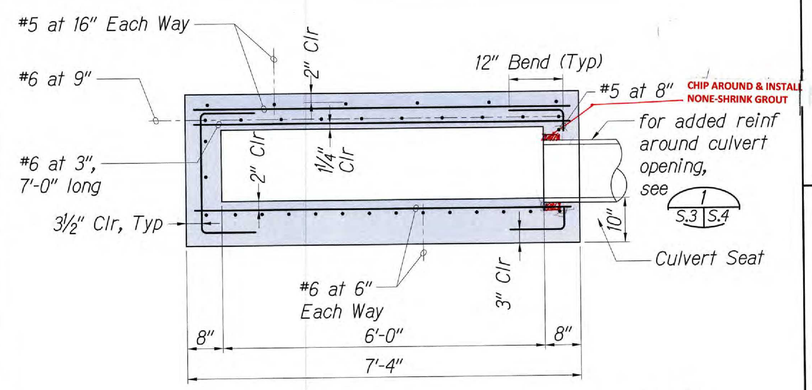

SECTION (4 / S.5 | S.5)
Scale : 3/4" = 1'-0"

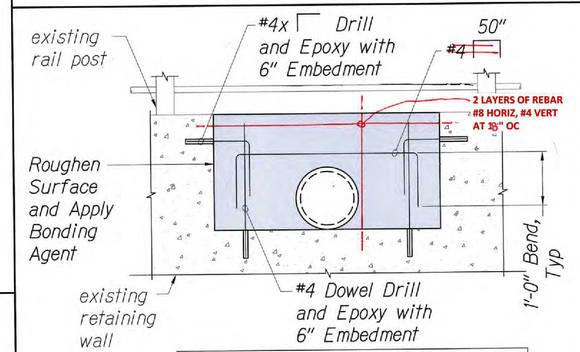

Note:
1. Reinforcing not shown for clarity

Retaining Wall Repair (7 / S.3 | S.3)
Scale : 3/4" = 1'-0"

For Top Slab Reinforcing See 3 / S.3 | S.3

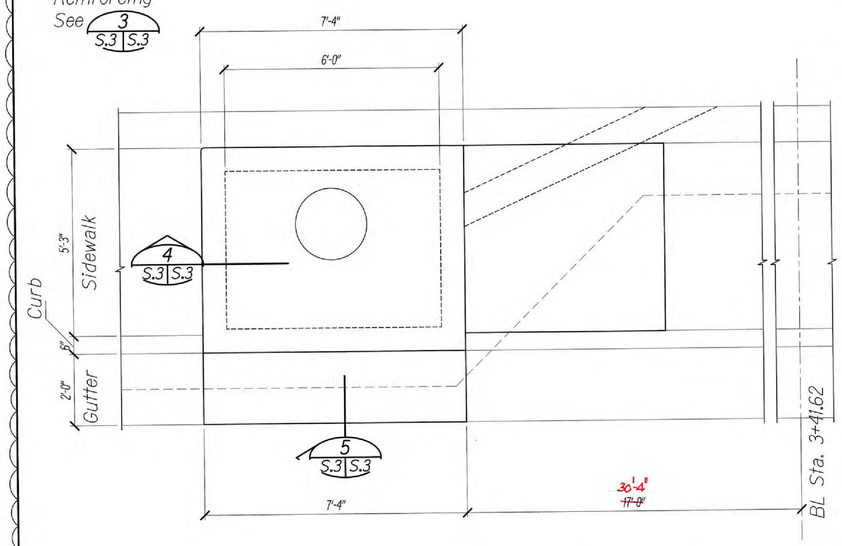

CATCH BASIN PLAN VIEW (2 / S.3 | S.3)
Scale : 1/2" = 1'-0"

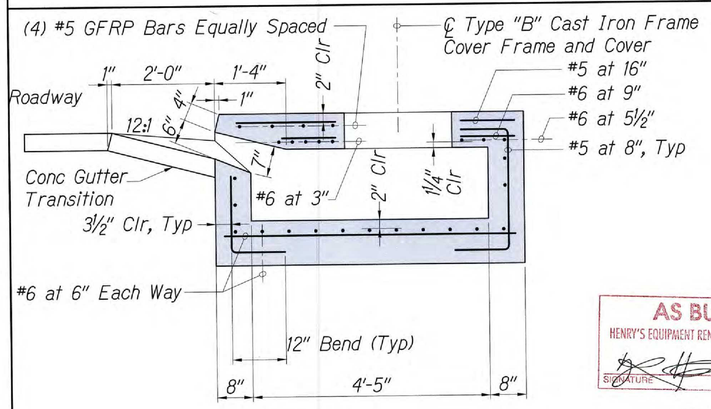

SECTION (5 / S.3 | S.3)
Scale : 3/4" = 1'-0"

AS BUILT
HENRY'S EQUIPMENT RENTAL & SALES, INC.
SIGNATURE 4/20/21 DATE

KEN KAZUO HAYASHIDA
LICENSED PROFESSIONAL ENGINEER
No. 6818-S
HAWAII, U.S.A.
LICENSE EXPIRES 4/30/20

THIS WORK WAS PREPARED BY ME OR UNDER MY SUPERVISION

ORIGINAL PLAN	SURVEY PLOTTED BY	DATE
NOTE BOOK	DRAWN BY	
	TRACED BY	
	DESIGNED BY	
	QUANTITIES BY	
No.	CHECKED BY	

11/02/20 | 2 | Replace Entire Sheet

STATE OF HAWAII
DEPARTMENT OF TRANSPORTATION
HIGHWAYS DIVISION

ALA NAPUNANI STREET CATCH BASIN DETAILS

DRAINAGE IMPROVEMENTS AT VARIOUS LOCATIONS
Interstate Route H-201, Vicinity of Fort Shafter Off-Ramp and Ala Napunani Street, Vicinity of Ala Aolani Street
Project No. HWY-0-07-16

Date: June 2019

SHEET No. 1 OF 2 SHEETS

C.O. 21

.3565.01 DOT Moanalua Freeway and Ala Aolani Street Drainage Improvements\004 Drawings\Structural\AutoCAD_format\2020-10-28_3565-01 Catch Basin\3565_S-3 Updated Drainage Details 2020-10-22.dwg, 11/4/2020 12:26:30 PM, csakamoto