FED. ROAD DIST. NO.	STATE	PROJ. NO.	FISCAL YEAR	SHEET NO.	TOTAL SHEETS
HAWAII	HAW.	H201A-01-06M	2008	30	64

INDEX TO DRAWINGS

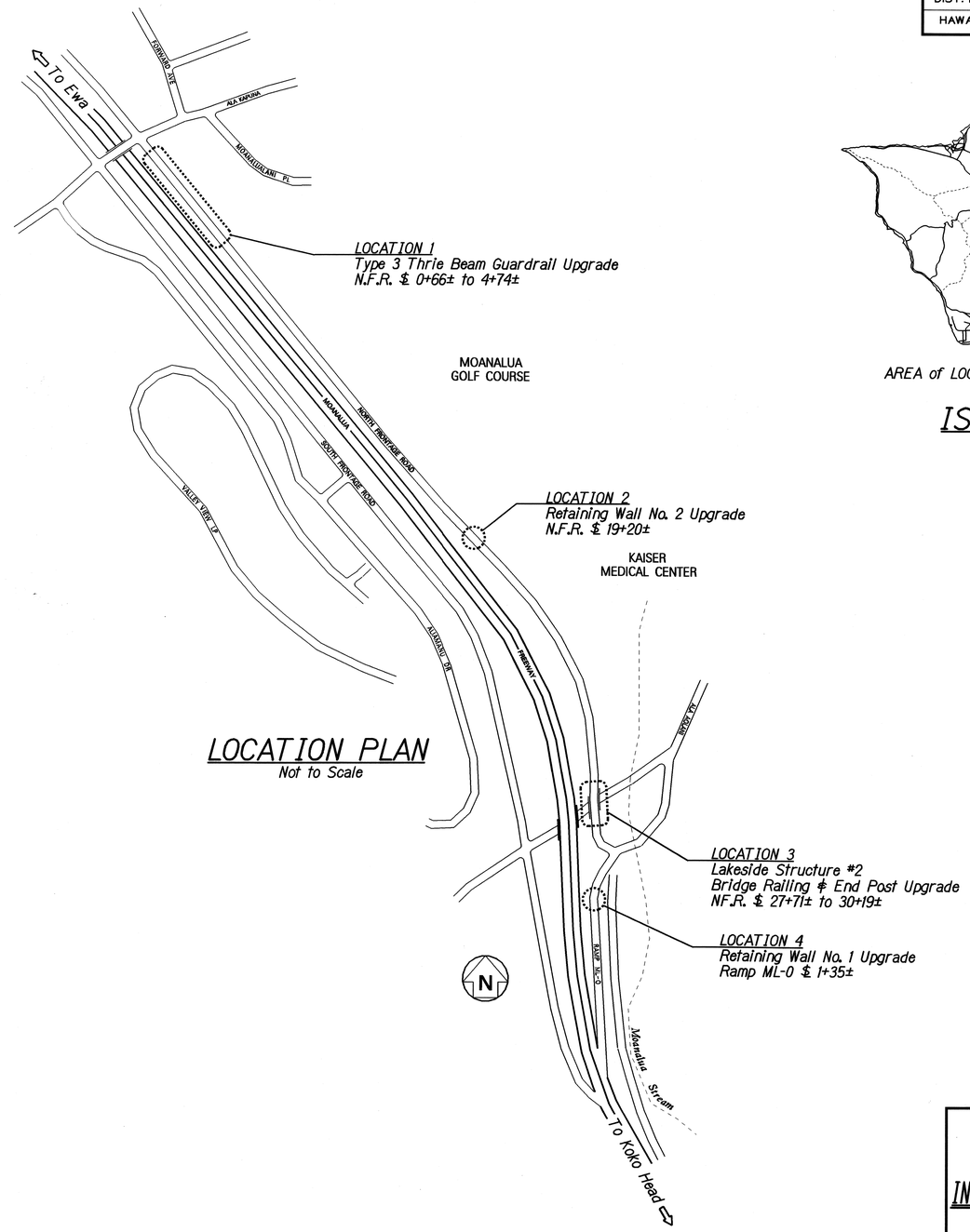

LOCATION PLAN
Not to Scale

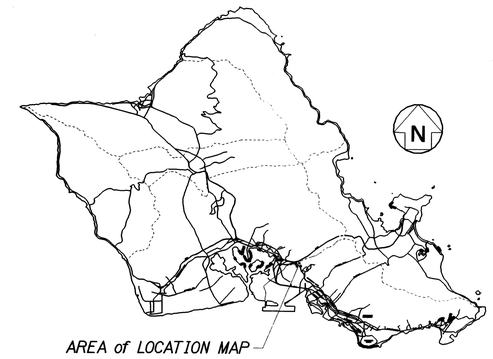

ISLAND of OAHU
Not to Scale

ORIGINAL PLAN	SURVEY PLOTTED BY XXX	DATE
	DRAWN BY	APR 2008
	TRACED BY	
NOTE BOOK	DESIGNED BY XXX	APR 2008
	REVIEWED BY XXX	APR 2008
N:\moaba\dgn	QUANTITIES BY XXX	APR 2008
	CHECKED BY XXX	APR 2008

STATE OF HAWAII
DEPARTMENT OF TRANSPORTATION
HIGHWAYS DIVISION

INDEX to DRAWINGS and LOCATION PLAN
MOANALUA FREEWAY
North Frontage Resurfacing
Project No. H201A-01-06M

Scale: As Noted
Date: Apr. 2008

SHEET No. Q1 OF 18 SHEETS

FED. ROAD DIST. NO.	STATE	PROJ. NO.	FISCAL YEAR	SHEET NO.	TOTAL SHEETS
HAWAII	HAW.	H201A-01-06M	2008	31	64

GENERAL NOTES

DESIGN SPECIFICATIONS:

A. AASHTO LRFD Bridge Design Specifications, Fourth Edition, including all interim revisions

MATERIALS:

A. Concrete: 4,000 psi

B. Reinforcment Steel: ASTM A 615, Grade 60

C. Admixture in concrete: See Special Provisions

D. All expansion and premolded joint filler shall be incidental to concrete and will not be paid for separately.

E. All structural steel plates shall be ASTM A 36, hot-dip galvanized after fabrication, unless otherwise shown.

F. Structural steel pipes shall be ASTM A 53, Grade B, hot-dip galvanized after fabrication, unless otherwise shown.

G. All anchor bolts, washers and nuts shall be ASTM F 1554, Gr. 105, hot-dip galvanized after fabrication, unless noted otherwise.

H. All studs and threaded rods shall be ASTM A 449, Type I, hot-dip galvanized after fabrication, unless noted otherwise.

I. All welding shall be in accordance with the current edition of Bridge Welding Code ANSI/AASHTO AWS D 1.5. Welding electrodes for structural steel shall be E 70.

CONSTRUCTION METHODS:

A. Refer to Hawaii Standard Specifications for Road, Bridge and Public Works Construction, 2005 Edition and Special Provisions.

B. Except as noted otherwise, all vertical dimensions are measured normal to roadway grade.

C. For steel reinforcing, stagger all splices where possible.

D. Steel reinforcing shall be supported, bent and placed as per AASHTO LRFD Bridge Design Specifications.

E. For cast-in-place concrete, minimum reinforcement cover:
Concrete cast against earth: 3"
Concrete cast against a smooth surface or finished to a smooth surface: 2"

F. At time concrete is placed, reinforcing shall be free from mud, oil, laitance or other coatings adversely affecting bond capacity.

G. Reinforcement, dowels and other embedded items shall be positively secured before pouring.

H. All dimensions relating to reinforcing bars (e.g. spacing of bars, etc.) are to centers of bars unless noted otherwise.

I. All footings shall bear on firm undisturbed natural soils or properly compacted structural fill.

J. All existing reinforcing and anchor bolts that can be incorporated in the new work shall be bent or cut as required and cleaned before being utilized in the new work.

K. All existing reinforcing and anchor bolts that cannot be incorporated in the new work shall be completely removed or removed to a minimum depth of one and one-half (1½) inches below finish grade and the area patched with mortar.

L. Existing structure to be removed shown by hatched lines. Removal shall be done in such a manner as to preclude any damage to the existing structure(s). Large vibratory type of equipment will not be permitted in the removal operation, nor for drilling of holes. Only small vibratory hand tools (15-lbs. max.) accepted by the Engineer will be allowed. Any damage to the existing structure(s) due to the Contractor's operation or negligence shall be repaired at his expense with no cost to the State.

N. Where the plans call for reinforcement bars or studs to be embedded or anchored into existing concrete, see Special Provisions Section 674--Concrete Retrofit for the Use of Adhesive Anchors.

O. Where the plans call for placing fresh plastic concrete against existing concrete, see Special Provisions Section 674--Concrete Retrofit for the Use of Bonding Agent.

P. Recompact existing soil under all new slabs and footings.

Q. See Special Provisions, Section 507 for special requirements for costruction of Type "A" End Post Upgrade Foundation.

REFERENCE:

A. Refer to Standard Plans for additional details and notes not covered by details and typical drawings.

GENERAL:

A. All items noted incidental will not be paid for separately.

B. The Contractor shall verify the locations of all existing utility lines and notify their respective owners before commencing with any work.

C. The Contractor shall verify all grades and dimensions before commencing with any work.

D. The Contractor shall be solely responsible for the protection of adjacent property, utilities and existing and new structures from damage due to construction. Repairing any damage shall be at no cost to the State.

E. The Conctractor shall conduct his work in such a manner and provide such temporary shoring or other measures as may be necessary to insure the safety of all concerned and to protect existing structures.

F. In the event of over-excavation, the space between the footing and the ground shall be filled with a minimum of Class D concrete at the Contractor's expense at no cost to the State.

G. Unless noted otherwise, all exposed concrete edges shall be chamfered ¾".

SYMBOLS AND ABBREVIATIONS

Detail or Section designation — XXX
Sheet No. Section is cut or Detail Location — XXX | XXX — Sheet No. Detail is drawn

(XX) - ℄ Bearing Abutment Seat Line

⊕ - Boring No. & Designation

Abut.	Abutment
AC	Asphaltic Concrete
Adj.	Adjacent
Alt.	Alternate
Approx.	Approximate
Az.	Azimuth
℄	Baseline
Bal.	Balance
Bet., Btwn.	Between
B.F.E.	Bottom Footing Elevation
Bk.	Back
Blt.	Bolt
Bm.	Beam
B, Bot., Bott.	Bottom
Br.	Bridge
Brg., Brgs.	Bearing, Bearings
B.V.C.	Beginning of Vertical Curve
℄	Center Line
Cant.	Cantilever
C.F.	Cubic Feet
CIP	Cast in Place
C.I.P.	Cast Iron Pipe
Cl., Clr.	Clear
Col.	Column
Conc.	Concrete
Conn.	Connection
Const.	Construction
Cont.	Continuous
CRM	Cement Rubble Masonry
C.Y., Cu. Yd.	Cubic Yards
Det.	Detail
Dia., ø	Diameter
Dim.	Dimension
Dwg., Dwgs.	Drawing, Drawings
EA, Ea., ea.	Each
E.F.	Each Face
Elec.	Electrical
El., Elev.	Elevation
Emb.	Embankment
E.P.	Edge of Pavement
Eq.	Equal
Est.	Estimated
E.W.	Each Way
Exc.	Excavation
Exist.	Existing
Exp., (E)	Expansion
Ext.	Exterior
(F)	Fixed
F'c	Specified Strength of Concrete
F'ci	Strength of Concrete at Time of Initial Prestress
F.F.	Front Face
Fig.	Figure
Fin.	Finish
Fin. Gr.	Finish Grade
Ftg.	Footing
Ga.	Gage, Gauge
Galv.	Galvanized
Gir., G	Girder
G.R.P.	Grouted Rubble Paving
Gr.	Grade
Grd.	Ground
G.W.P.	George Washington Parkway
(H)	Hinge
Horiz.	Horizontal
HS	High Strength
Ht.	Height
Hwy.	Highway
I.B.	Inbound
I.F.	Inside Face
In.	Inch
Int.	Interior
Inv.	Invert
Jt.	Joint
L	Length
LBS., lb., lbs.	Pound, Pounds
L.F., Lin. Ft.	Linear Feet
Lg.	Long
Longit.	Longitudinal
L.S.	Lump Sum
Lt.	Left
Ltg. Std.	Lighting Standard
Max.	Maximum
Mech.	Mechanical
Min.	Minimum
Misc.	Miscellaneous
N	North
N.B.	Northbound
N.F.	Near Face
No., #	Number
N.T.S.	Not To Scale
O.B.	Outbound
o.c.	On Center
O.G.	Outside Girder
Opn'g	Opening
o/s, O/S	Offset
P.B.	Pull Box
P.C.	Point of Curvature
P.C.C.	Portland Cement Concrete
Perf.	Perforated
PG-( )	Prestressed Girder-(Type)
PL	Plate
P/S	Prestressed Strands
Pvmt.	Pavement
R	Radius
Rdwy	Roadway
Ref.	Reference
Reinf.	Reinforcement
Ret.	Retaining
Req'd	Required
R.F.	Rear Face
Rt.	Right
R/W	Right Of Way
S	South
S.B.	Southbound
Sect.	Section
SF	Square Feet
Shldr.	Shoulder
Sht.	Sheet
Spc.	Space
Spcd.	Spaced
Spcg.	Spacing
Spec.	Specification
Sprd.	Spread
Sta.	Station
Std.	Standard
Stirr.	Stirrup
Str.	Straight
Struct.	Structural
Symm.	Symmetrical
T	Top
Temp.	Temporary
Thk.	Thick, Thickness
T.O.D.	Top Of Deck
Tot.	Total
Transv.	Transverse
Typ.	Typical
Var.	Varies
V.C.	Vertical Curve
Vert.	Vertical
W	West
w/	With
W.W.	Wingwall

ORIGINAL PLAN	SURVEY PLOTTED BY XXX	DATE APR 2008
	DRAWN BY XXX	APR 2008
NOTE BOOK	TRACED BY XXX	APR 2008
	DESIGNED BY XXX	APR 2008
9moa0a02.dgn	QUANTITIES BY XXX	APR 2008
N/A	CHECKED BY XXX	APR 2008

STATE OF HAWAII
DEPARTMENT OF TRANSPORTATION
HIGHWAYS DIVISION

GENERAL NOTES, SYMBOLS and ABBREVIATIONS

MOANALUA FREEWAY
North Frontage Resurfacing
Project No. H201A-01-06M

Scale: As Noted Date: Apr. 2008

FED. ROAD DIST. NO.	STATE	PROJ. NO.	FISCAL YEAR	SHEET NO.	TOTAL SHEETS
HAWAII	HAW.	H201A-01-06M	2008	32	64

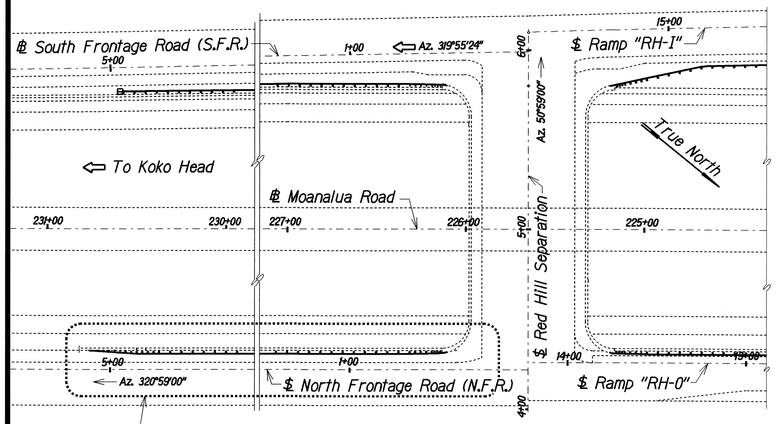

LOCATION PLAN
Not to Scale

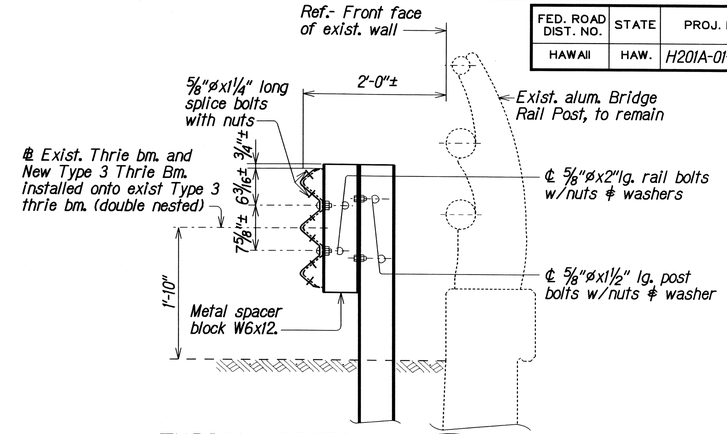

TYPICAL SECTION
Scale: 1" = 1'-0"
A Q3 Q3

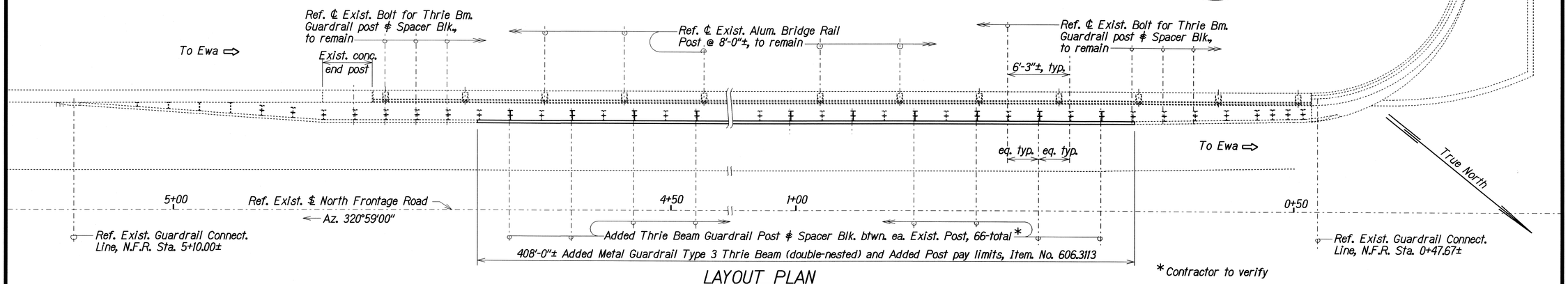

* Contractor to verify

LAYOUT PLAN
Scale: 1" = 5'-0"

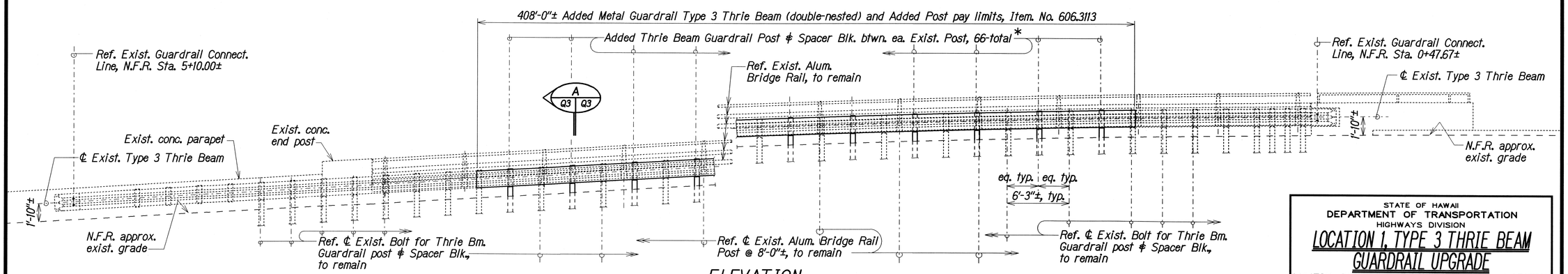

ELEVATION
Scale: 1" = 5'-0"

LOCATION 1, TYPE 3 THRIE BEAM GUARDRAIL UPGRADE
NORTH FRONTAGE ROAD ℄ 0+66± to 4+74±

ORIGINAL PLAN	SURVEY PLOTTED BY XXX	DATE APR 2008
	DRAWN BY	
	TRACED BY XXX	APR 2008
NOTE BOOK	DESIGNED BY XXX	APR 2008
	QUANTITIES BY XXX	APR 2008
N:\moab\3.dgn	CHECKED BY XXX	APR 2008

STATE OF HAWAII
DEPARTMENT OF TRANSPORTATION
HIGHWAYS DIVISION

LOCATION 1, TYPE 3 THRIE BEAM GUARDRAIL UPGRADE
LOCATION PLAN, LAYOUT PLAN, ELEVATION and SECTION
MOANALUA FREEWAY
North Frontage Resurfacing
Project No. H201A-01-06M

Scale: As Noted
Date: Apr. 2008

SHEET No. Q3 OF 18 SHEETS

FED. ROAD DIST. NO.	STATE	PROJ. NO.	FISCAL YEAR	SHEET NO.	TOTAL SHEETS
HAWAII	HAW.	H201A-01-06M	2008	33	64

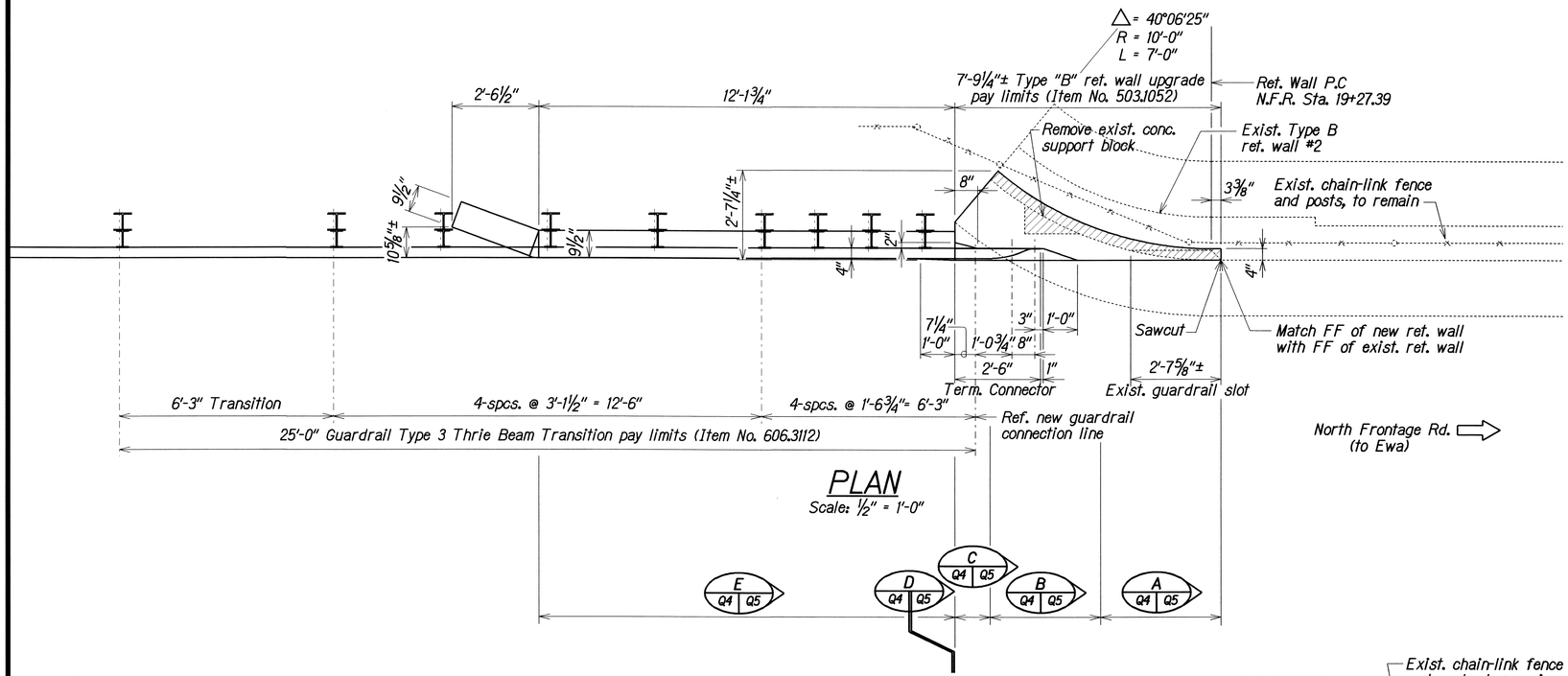

PLAN

Scale: ½" = 1'-0"

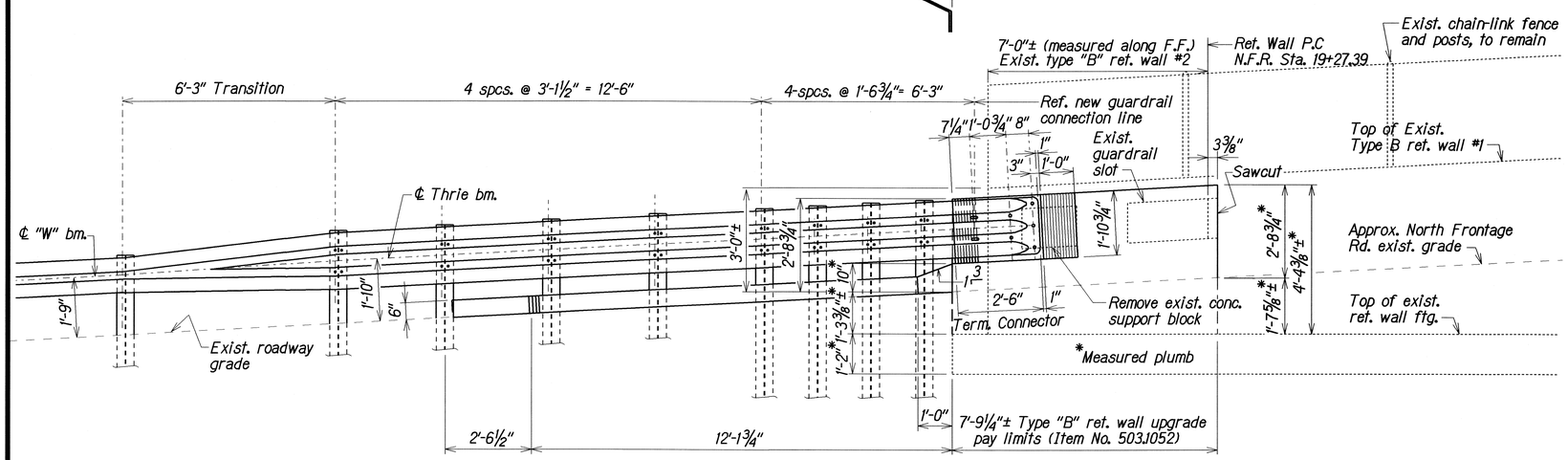

ELEVATION

Scale: ½" = 1'-0"

LOCATION 2, TYPE "B" RETAINING WALL NO. 2 UPGRADE
NORTH FRONTAGE ROAD ℄ 19+20±

ORIGINAL PLAN	SURVEY PLOTTED BY	DATE
	DRAWN BY XXX	APR 2008
NOTE BOOK	TRACED BY	
	DESIGNED BY XXX	APR 2008
	REVIEWED BY XXX	APR 2008
N:\moanal\4.dgn	QUANTITIES BY XXX	APR 2008
	CHECKED BY XXX	APR 2008

STATE OF HAWAII
DEPARTMENT OF TRANSPORTATION
HIGHWAYS DIVISION

LOCATION 2, TYPE "B"
RETAINING WALL NO. 2 UPGRADE
PLAN and ELEVATION
MOANALUA FREEWAY
North Frontage Resurfacing
Project No. H201A-01-06M

Scale: As Noted — Date: Apr, 2008

SHEET No. Q4 OF 18 SHEETS

FED. ROAD DIST. NO.	STATE	PROJ. NO.	FISCAL YEAR	SHEET NO.	TOTAL SHEETS
HAWAII	HAW.	H201A-01-06M	2008	34	64

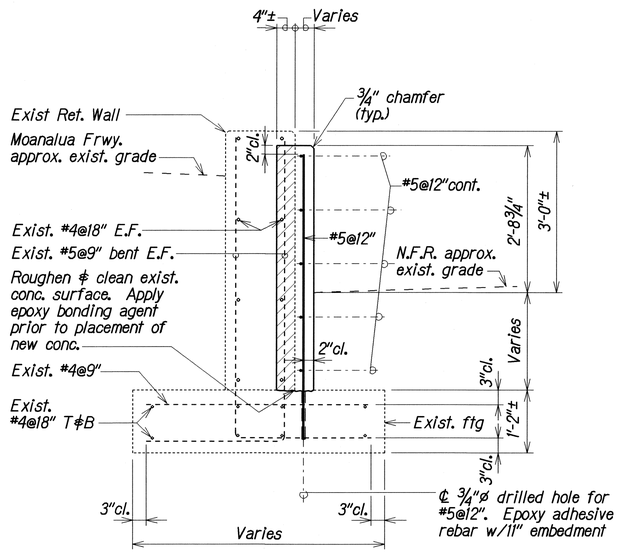

SECTION A (Q4 | Q5)
Scale: 3/4" = 1'-0"

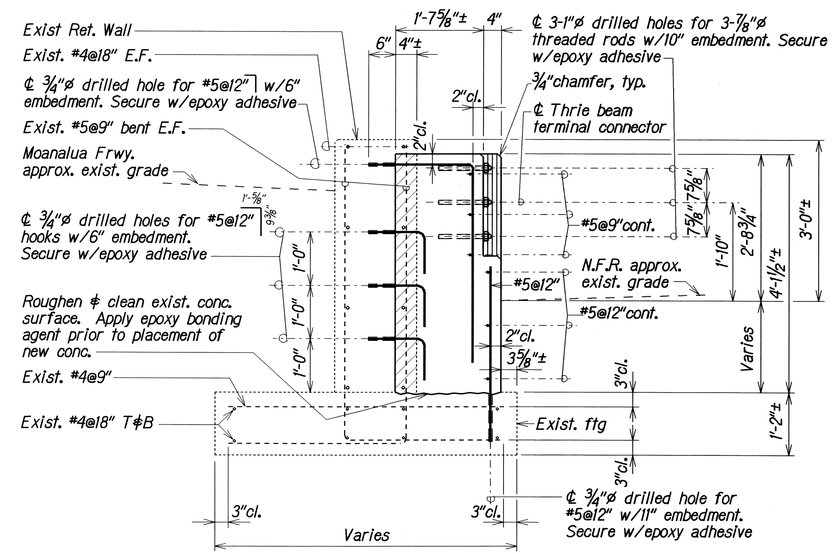

SECTION B (Q4 | Q5)
Scale: 3/4" = 1'-0"

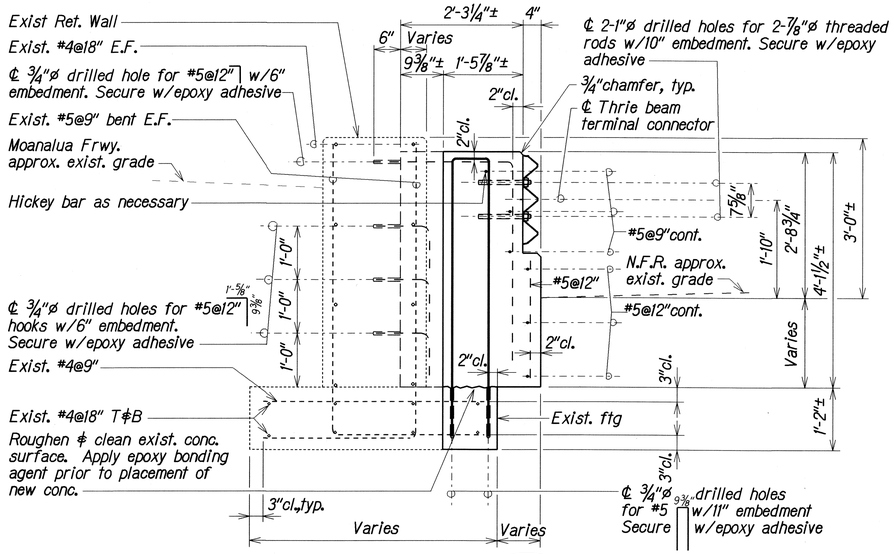

SECTION C (Q4 | Q5)
Scale: 3/4" = 1'-0"

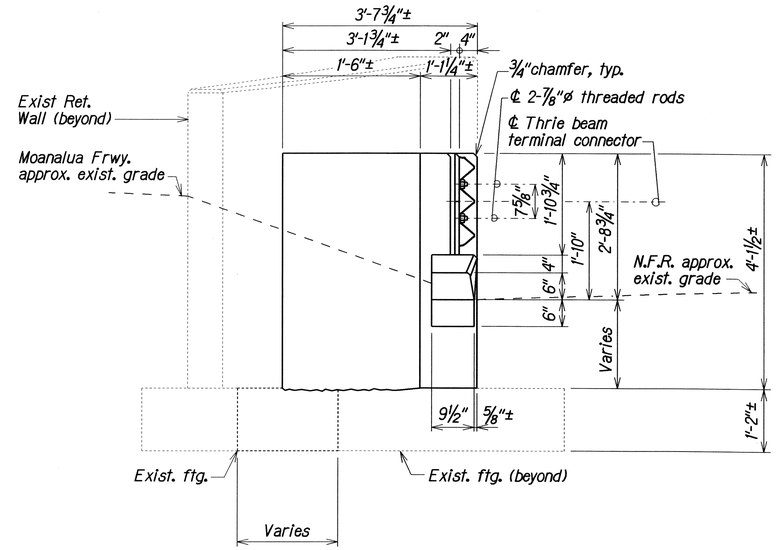

SECTION D (Q4 | Q5)
Scale: 3/4" = 1'-0"

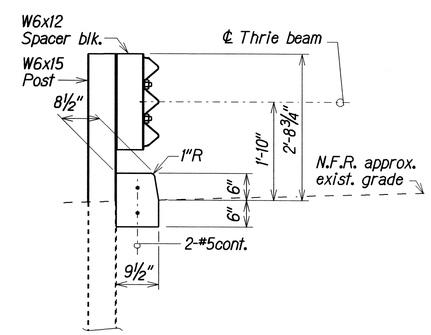

SECTION E (Q4 | Q5)
Scale: 3/4" = 1'-0"

ORIGINAL PLAN	SURVEY PLOTTED BY	XXX	DATE APR 2008
	DRAWN BY		
	TRACED BY	XXX	APR 2008
NOTE BOOK	DESIGNED BY	XXX	APR 2008
	QUANTITIES BY	XXX	APR 2008
No. 9moa06c5.dgn	CHECKED BY	XXX	APR 2008

TYPICAL SECTIONS

LOCATION 2, TYPE "B" RETAINING WALL NO. 2 UPGRADE
NORTH FRONTAGE ROAD ℄ 19+20±

STATE OF HAWAII
DEPARTMENT OF TRANSPORTATION
HIGHWAYS DIVISION

LOCATION 2, TYPE "B"
RETAINING WALL NO. 2 UPGRADE
TYPICAL SECTIONS
MOANALUA FREEWAY
North Frontage Resurfacing
Project No. H201A-01-06M

Scale: As Noted
Date: Apr. 2008

SHEET No. Q5 OF 18 SHEETS

FED. ROAD DIST. NO.	STATE	PROJ. NO.	FISCAL YEAR	SHEET NO.	TOTAL SHEETS
HAWAII	HAW.	H201A-01-06M	2008	35	64

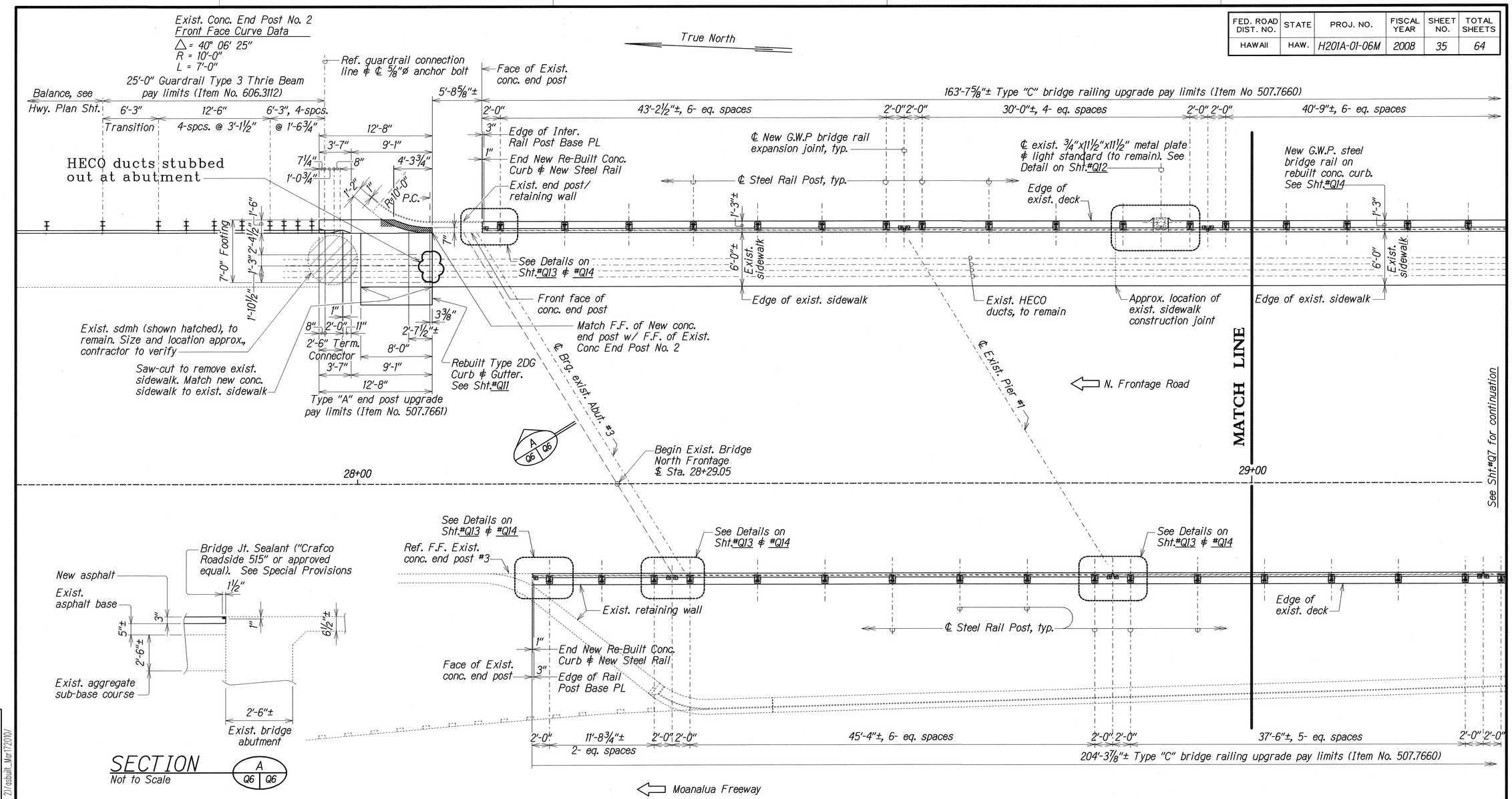

SECTION
Not to Scale

PARTIAL LAYOUT PLAN--END POST NOS. 2 and 3

Scale: 3/16" = 1'-0"

LOCATION 3, LAKESIDE STRUCTURE NO. 2 BRIDGE RAILING and ENDPOST UPGRADE
NORTH FRONTAGE ROAD ₤ 27+71± to 30+19±

LEGEND FOR AS-BUILT POSTINGS

∿∿∿	Squiggly line for as-built deletion
~~100.00~~	Double line for as-built deletion
Roadway	Text for as-built posting

ORIGINAL PLAN	SURVEY PLOTTED BY	XXX	DATE APR 2008
	DRAWN BY		
	TRACED BY	XXX	APR 2008
NOTE BOOK	DESIGNED BY	XXX	APR 2008
	QUANTITIES BY	XXX	APR 2008
N/A alr_q6tb.dgn	CHECKED BY	XXX	APR 2008

db4/:/usr7/ksg/pw/modlakeside struct no 2/asbuilt_Mar172010/

STATE OF HAWAII
DEPARTMENT OF TRANSPORTATION
HIGHWAYS DIVISION

LOCATION 3, LAKESIDE STRUCTURE NO. 2
BRIDGE RAILING and END POST UPGRADE
PART. LAYOUT PLAN--END POST NOS. 2 and 3; SECTION
MOANALUA FREEWAY
North Frontage Resurfacing
Project No. H201A-01-06M

Scale: As Noted Date: Apr, 2008

SHEET No. Q6 OF 18 SHEETS

"AS-BUILT"

FED. ROAD DIST. NO.	STATE	PROJ. NO.	FISCAL YEAR	SHEET NO.	TOTAL SHEETS
HAWAII	HAW.	H201A-01-06M	2008	36	64

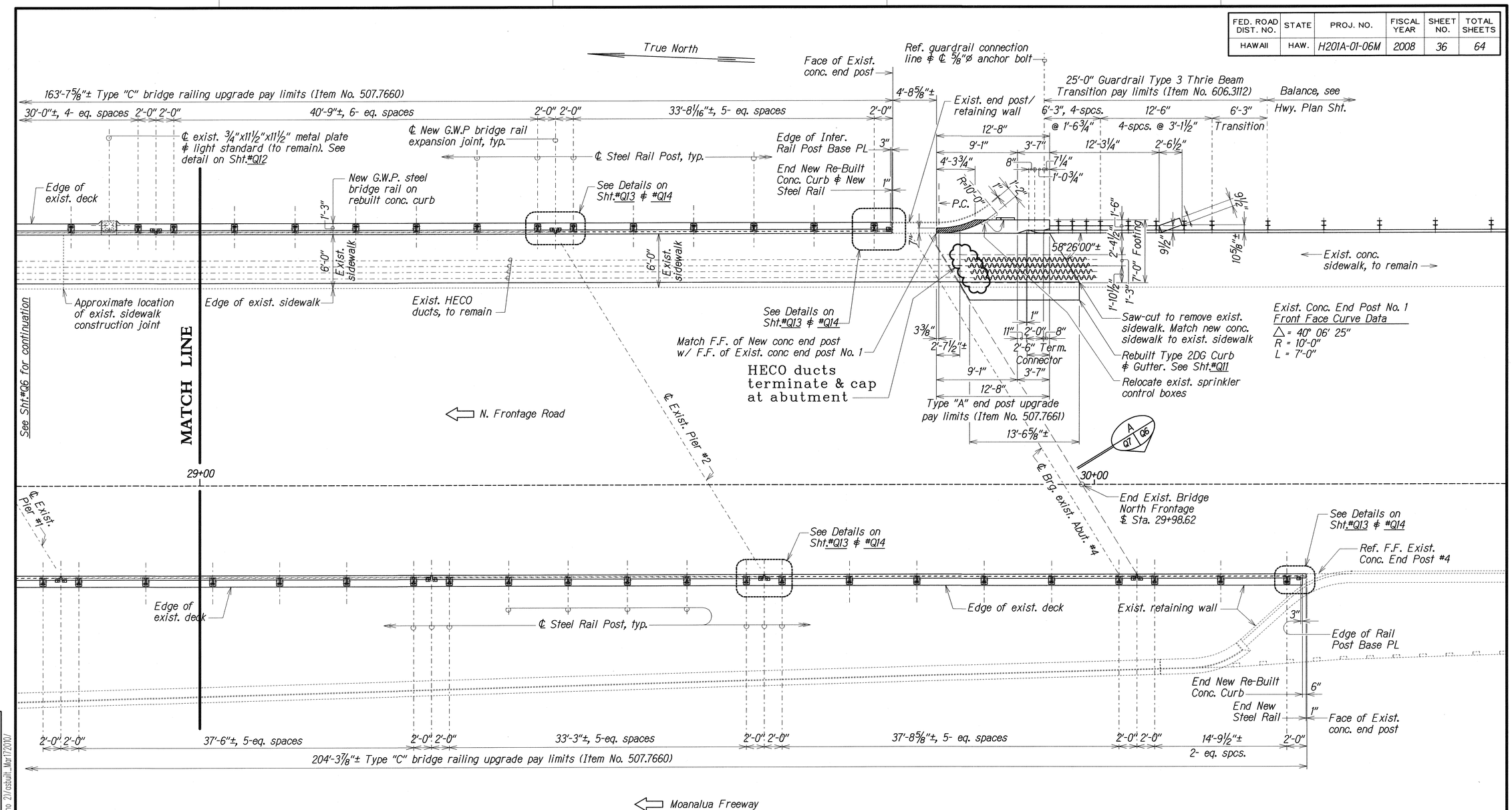

PARTIAL LAYOUT PLAN--END POST NOS. 1 and 4

Scale: 3/16" = 1'-0"

LOCATION 3, LAKESIDE STRUCTURE NO. 2 BRIDGE RAILING and ENDPOST UPGRADE
NORTH FRONTAGE ROAD ∮ 27+71± to 30+19±

LEGEND FOR AS-BUILT POSTINGS

∿∿∿	Squiggly line for as-built deletion
~~100.00~~	Double line for as-built deletion
Roadway	Text for as-built posting

ORIGINAL PLAN	SURVEY PLOTTED BY	XXX	DATE	APR 2008
	DRAWN BY			
	TRACED BY			
NOTE BOOK	DESIGNED BY	XXX		APR 2008
	QUANTITIES BY	XXX		APR 2008
N/A	CHECKED BY	XXX		APR 2008

d:\4/6/usr2/ksg/pw/moanlakeside struct no 2/asbuilt_Mar17(10).

STATE OF HAWAII
DEPARTMENT OF TRANSPORTATION
HIGHWAYS DIVISION

LOCATION 3, LAKESIDE STRUCTURE NO. 2
BRIDGE RAILING and END POST UPGRADE
PARTIAL LAYOUT PLAN--END POST NOS. 1 and 2
MOANALUA FREEWAY
North Frontage Resurfacing
Project No. H201A-01-06M

Scale: As Noted — Date: Apr. 2008

SHEET No. Q7 OF 18 SHEETS

"AS-BUILT"

FED. ROAD DIST. NO.	STATE	PROJ. NO.	FISCAL YEAR	SHEET NO.	TOTAL SHEETS
HAWAII	HAW.	H201A-01-06M	2008	37	64

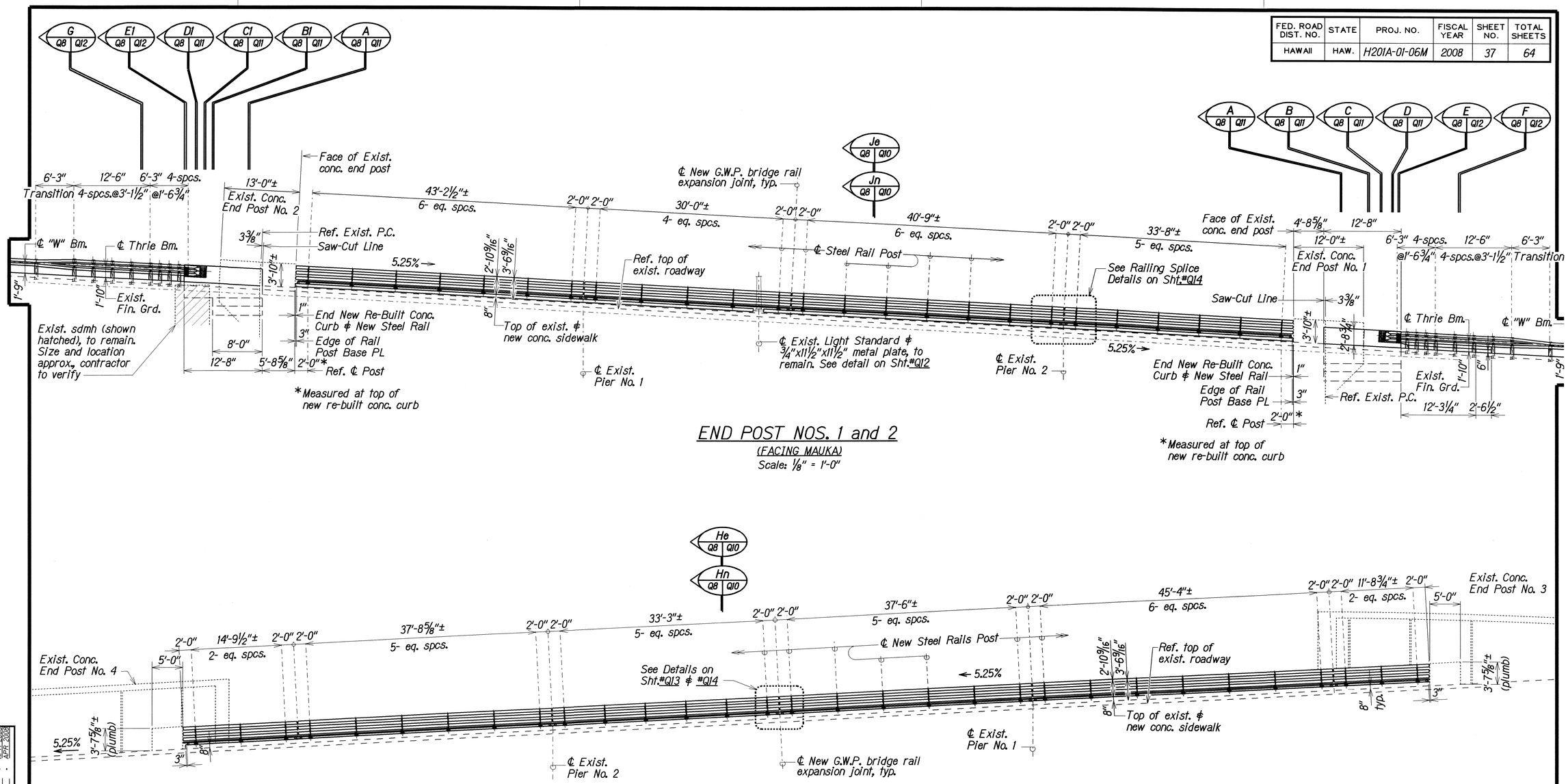

END POST NOS. 1 and 2

(FACING MAUKA)

Scale: ⅛" = 1'-0"

END POST NOS. 3 and 4

(FACING MAKAI)

Scale: ⅛" = 1'-0"

ELEVATION--NEW STEEL RAILING and CONCRETE END POSTS

LOCATION 3, LAKESIDE STRUCTURE NO. 2 BRIDGE RAILING and ENDPOST UPGRADE

NORTH FRONTAGE ROAD ℄ 27+71± to 30+19±

ORIGINAL PLAN	SURVEY PLOTTED BY XXX	DATE
	DRAWN BY	
	TRACED BY	APR 2008
NOTE BOOK	DESIGNED BY XXX	APR 2008
	QUANTITIES BY XXX	APR 2008
9mod0q8.dgn	CHECKED BY XXX	APR 2008

STATE OF HAWAII
DEPARTMENT OF TRANSPORTATION
HIGHWAYS DIVISION

LOCATION 3, LAKESIDE STRUCTURE NO. 2
BRIDGE RAILING and END POST UPGRADE
ELEVATION--NEW STEEL RAILING and CONCRETE END POSTS
MOANALUA FREEWAY, North Frontage Resurfacing
Project No. H201A-01-06M

Scale: As Noted — Date: Apr, 2008

SHEET No. Q8 OF 18 SHEETS

FED. ROAD DIST. NO.	STATE	PROJ. NO.	FISCAL YEAR	SHEET NO.	TOTAL SHEETS
HAWAII	HAW.	H201A-01-06M	2008	38	64

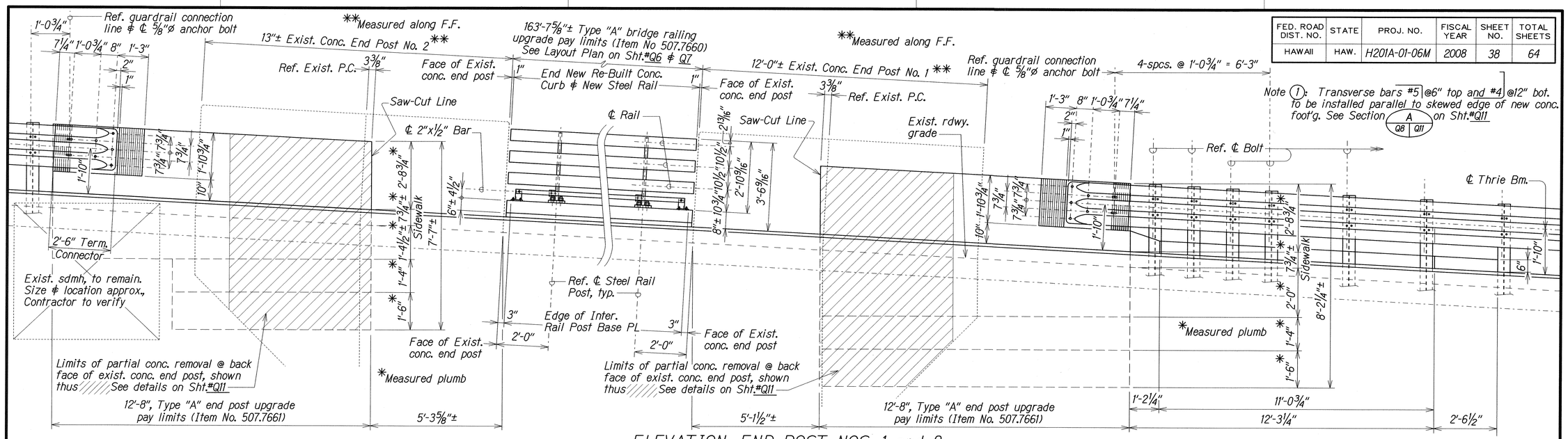

ELEVATION--END POST NOS. 1 and 2

Scale: 1/2" = 1'-0"

Note (1): Transverse bars #5 @6" top and #4 @12" bot. to be installed parallel to skewed edge of new conc. foot'g. See Section A (Q8 | Q11) on Sht.#Q11

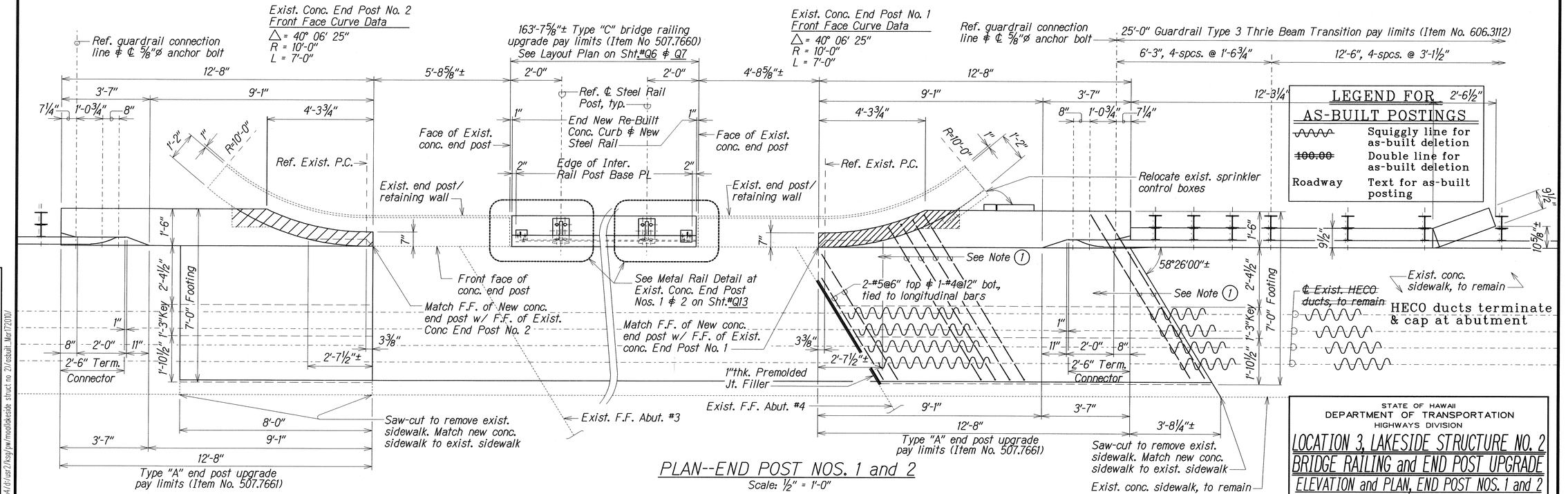

PLAN--END POST NOS. 1 and 2

Scale: 1/2" = 1'-0"

LEGEND FOR AS-BUILT POSTINGS

∿∿∿	Squiggly line for as-built deletion
~~100.00~~	Double line for as-built deletion
Roadway	Text for as-built posting

STATE OF HAWAII
DEPARTMENT OF TRANSPORTATION
HIGHWAYS DIVISION

LOCATION 3, LAKESIDE STRUCTURE NO. 2 BRIDGE RAILING and END POST UPGRADE

ELEVATION and PLAN, END POST NOS. 1 and 2

MOANALUA FREEWAY
North Frontage Resurfacing
Project No. H201A-01-06M

Scale: As Noted — Date: Apr. 2008

SHEET No. Q9 OF 18 SHEETS

ORIGINAL PLAN	SURVEY PLOTTED BY XXX	DATE APR 2008
	DRAWN BY XXX	APR 2008
	TRACED BY XXX	APR 2008
NOTE BOOK	DESIGNED BY XXX	APR 2008
	QUANTITIES BY XXX	APR 2008
N:\f\f_q9ab.dgn	CHECKED BY XXX	APR 2008

dgn4/8/usr2/kesg/pw/modlakeside struct no 2/rdsbuilt_Mar172010

LOCATION 3, LAKESIDE STRUCTURE NO. 2 BRIDGE RAILING and ENDPOST UPGRADE
NORTH FRONTAGE ROAD ∢ 27+71± to 30+19±

"AS-BUILT"

FED. ROAD DIST. NO.	STATE	PROJ. NO.	FISCAL YEAR	SHEET NO.	TOTAL SHEETS
HAWAII	HAW.	H201A-01-06M	2008	39	64

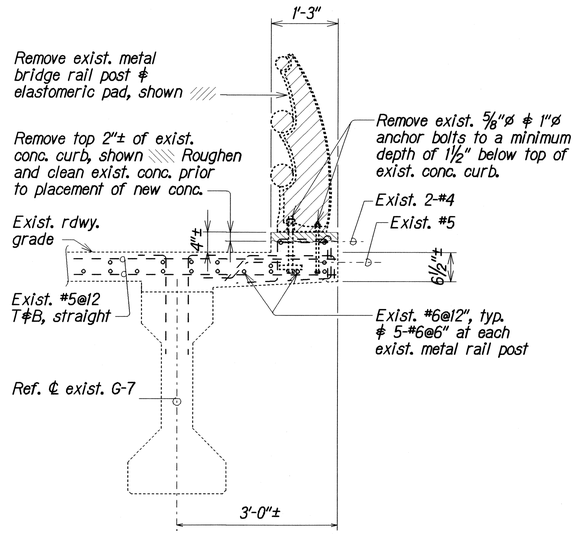

TYPICAL REMOVAL DETAIL

Scale: 3/4" = 1'-0"

He | Q8 | Q10

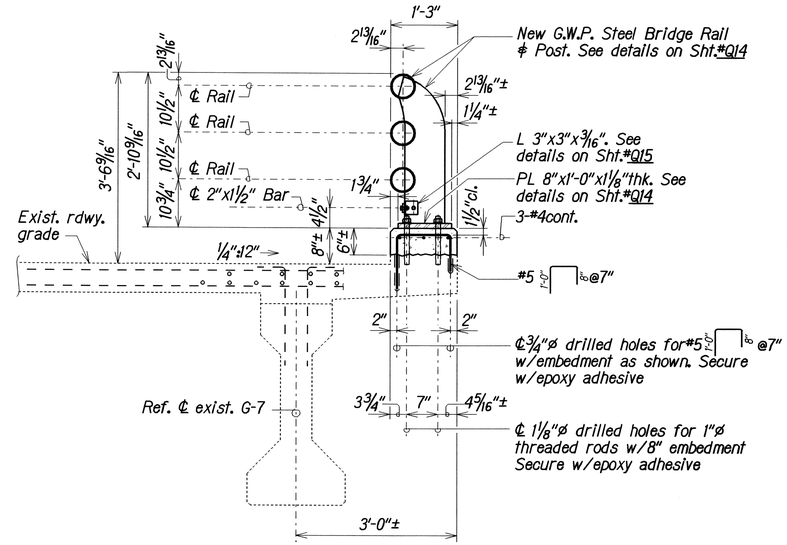

TYPICAL RE-BUILD DETAIL

Scale: 3/4" = 1'-0"

Hn | Q8 | Q10

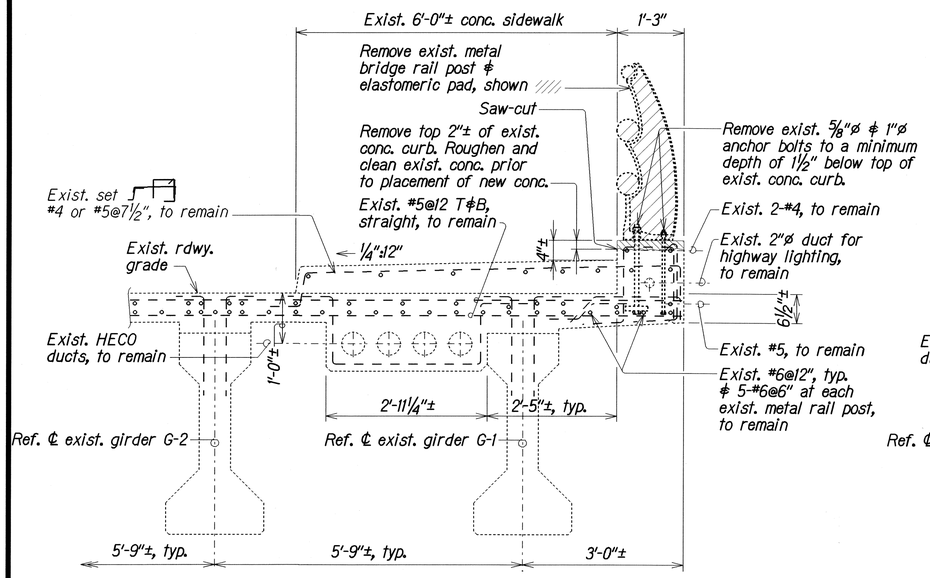

TYPICAL REMOVAL DETAIL

Scale: 3/4" = 1'-0"

Je | Q8 | Q10

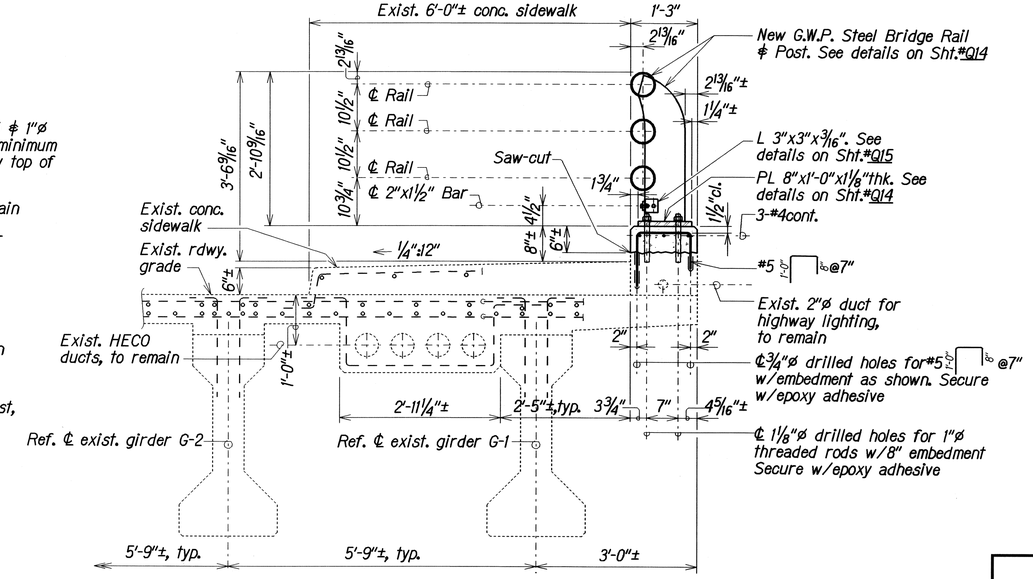

TYPICAL RE-BUILD DETAIL

Scale: 3/4" = 1'-0"

Jn | Q8 | Q10

ORIGINAL PLAN	SURVEY PLOTTED BY XXX	DATE
	DRAWN BY XXX	APR 2008
NOTE BOOK	TRACED BY XXX	APR 2008
	DESIGNED BY XXX	APR 2008
	QUANTITIES BY XXX	APR 2008
	CHECKED BY XXX	APR 2008

LOCATION 3, LAKESIDE STRUCTURE NO. 2 BRIDGE RAILING and END POST UPGRADE
NORTH FRONTAGE ROAD ℄ 27+71± to 30+19±

STATE OF HAWAII
DEPARTMENT OF TRANSPORTATION
HIGHWAYS DIVISION

LOCATION 3, LAKESIDE STRUCTURE NO. 2
BRIDGE RAILING and END POST UPGRADE
TYPICAL REMOVAL and RE-BUILD DETAILS

MOANALUA FREEWAY
North Frontage Resurfacing
Project No. H201A-01-06M

Scale: As Noted — Date: Apr. 2008

SHEET No. Q10 OF 18 SHEETS

FED. ROAD DIST. NO.	STATE	PROJ. NO.	FISCAL YEAR	SHEET NO.	TOTAL SHEETS
HAWAII	HAW.	H201A-01-06M	2008	ADD.40	64

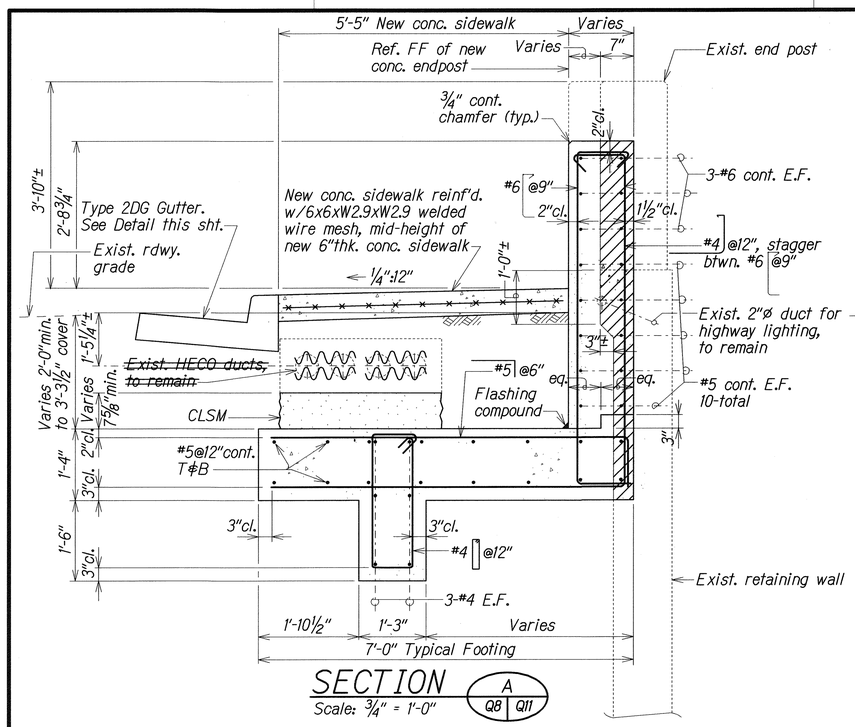

SECTION A
Scale: 3/4" = 1'-0"
Q8 | Q11

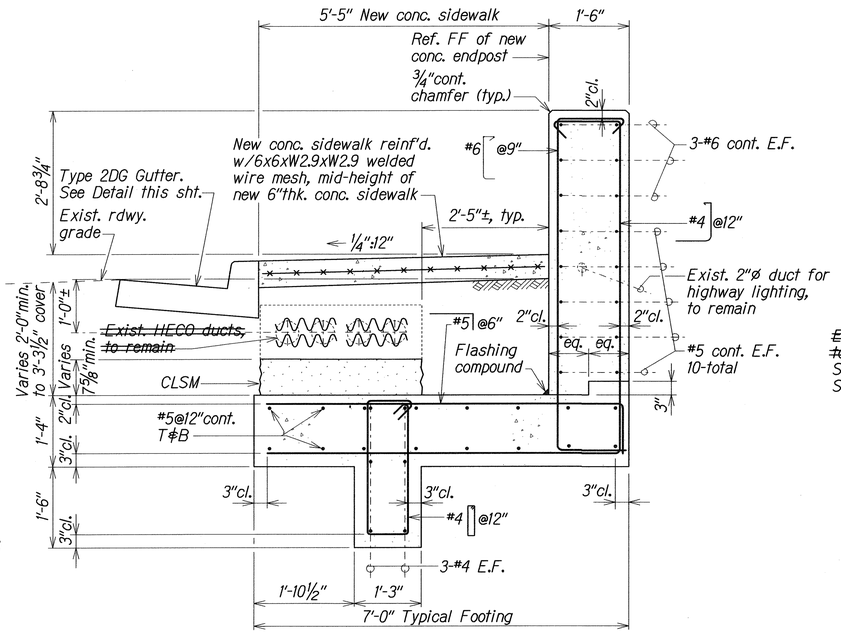

SECTION B
Scale: 3/4" = 1'-0"
Q8 | Q11

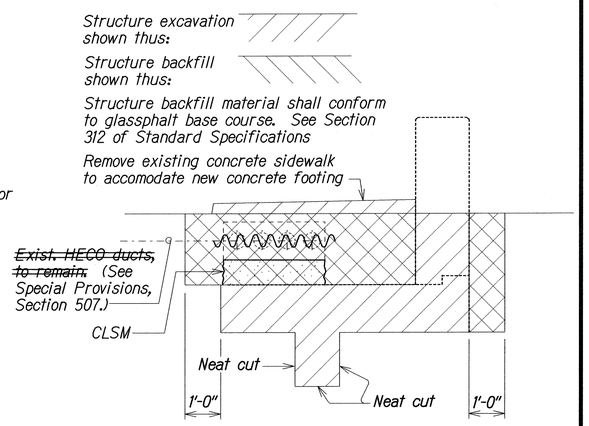

TYPICAL STRUCTURE EXCAVATION and BACKFILL

Not to Scale

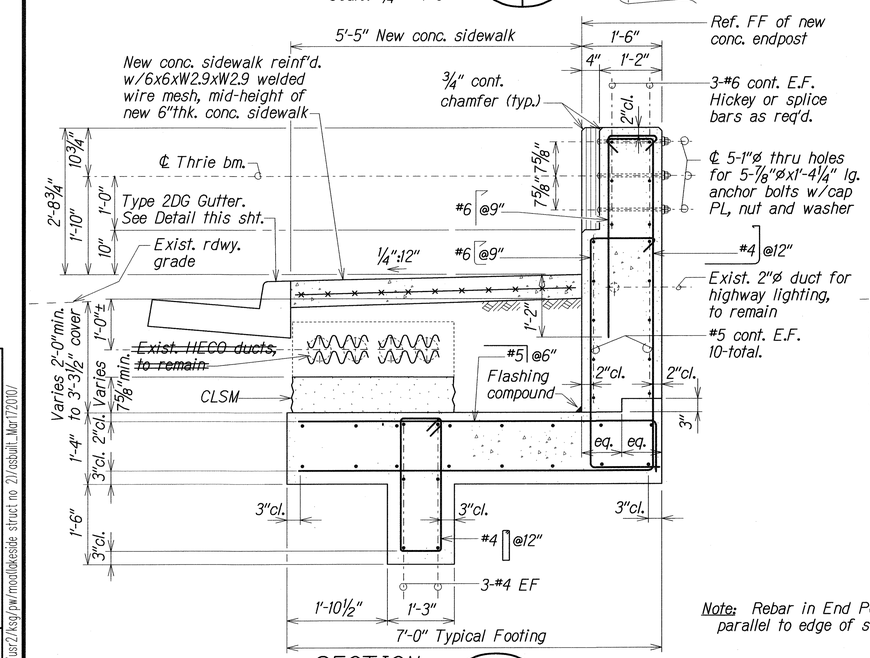

SECTION C
Scale: 3/4" = 1'-0"
Q8 | Q11

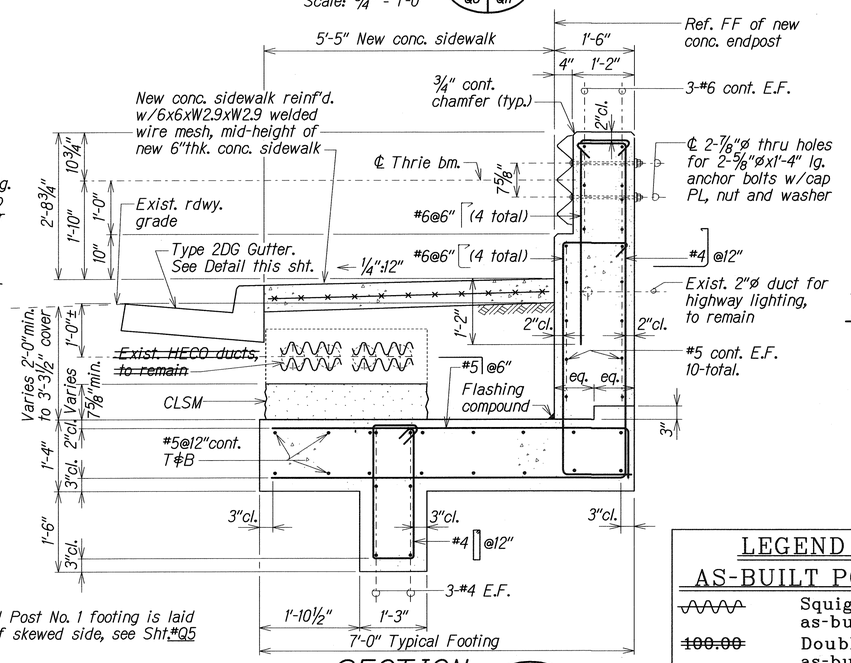

SECTION D
Scale: 3/4" = 1'-0"
Q8 | Q11

Note: Rebar in End Post No. 1 footing is laid parallel to edge of skewed side, see Sht. #Q5

TYPICAL SECTIONS

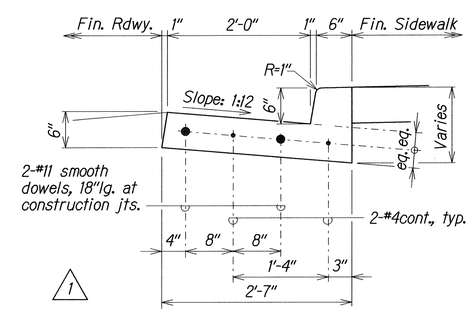

1

TYPE 2DG CURB & GUTTER DETAIL

Not to Scale

LEGEND FOR AS-BUILT POSTINGS

~~	Squiggly line for as-built deletion
~~100.00~~	Double line for as-built deletion
Roadway	Text for as-built posting

DATE	REVISION
1 6/16/08	Added #11 smooth dowels to Type 2DG Curb & Gutter Detail. Revised dimensions accordingly

STATE OF HAWAII
DEPARTMENT OF TRANSPORTATION
HIGHWAYS DIVISION

LOCATION 3, LAKESIDE STRUCTURE NO. 2
BRIDGE RAILING and END POST UPGRADE
TYPICAL SECTIONS, STRUCTURE EXCAVATION & BACKFILL and TYPE 2DG CURB & GUTTER DETAIL
MOANALUA FREEWAY, North Frontage Resurfacing
Project No. H201A-01-06M

Scale: As Noted — Date: Apr. 2008

SHEET No. Q11 OF 18 SHEETS

ORIGINAL PLAN		SURVEY PLOTTED BY	XXX	DATE	APR 2008
		DRAWN BY	XXX	DATE	APR 2008
		TRACED BY	XXX	DATE	APR 2008
NOTE BOOK		DESIGNED BY	XXX	DATE	APR 2008
nlr_q11ab.dgn		QUANTITIES BY	XXX	DATE	APR 2008
N. q11ab.dgn		CHECKED BY	XXX	DATE	APR 2008

dh41/d:/usr2/ksg/pw/mondl/keside struct no 2/ksbuilt_Mar172010/

"AS-BUILT"

ADD.40

FED. ROAD DIST. NO.	STATE	PROJ. NO.	FISCAL YEAR	SHEET NO.	TOTAL SHEETS
HAWAII	HAW.	H201A-01-06M	2008	41	64

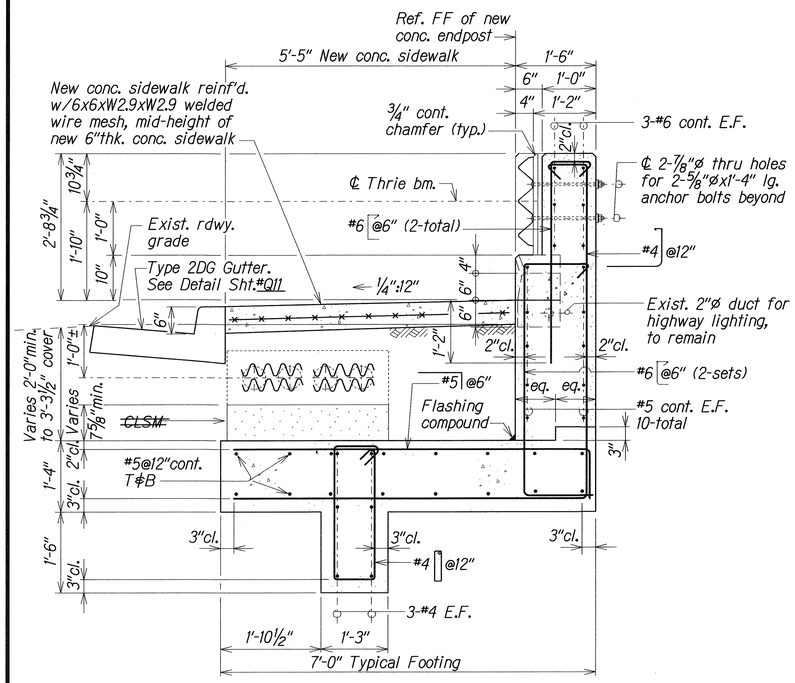

SECTION E (Q8 | Q12)
Scale: 3/4" = 1'-0"

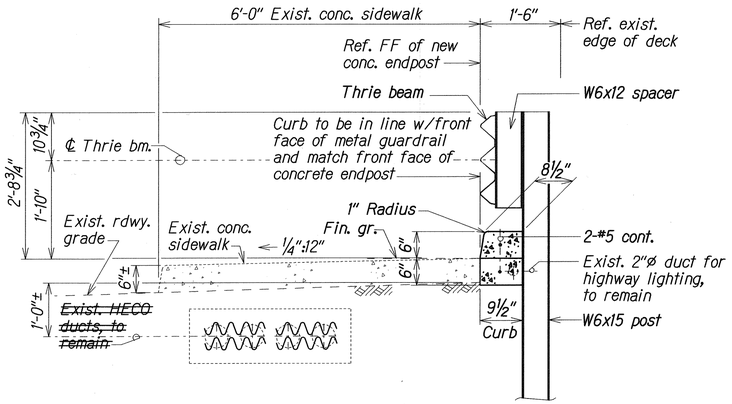

SECTION F (Q8 | Q12)
Scale: 3/4" = 1'-0"

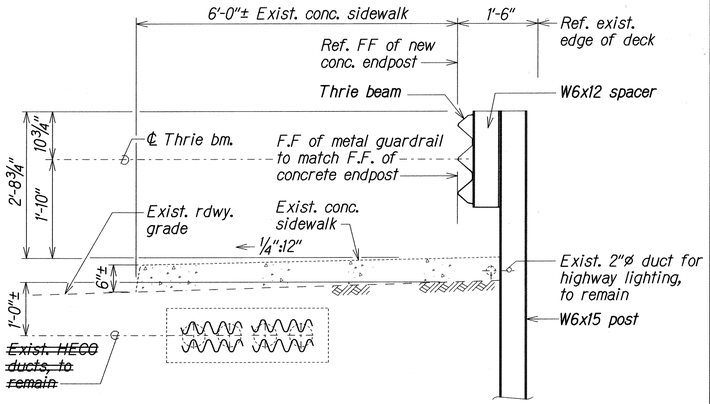

SECTION G (Q8 | Q12)
Scale: 3/4" = 1'-0"

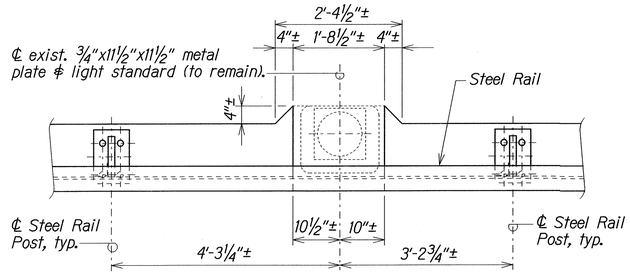

REBUILT CONCRETE CURB DETAIL at EXISTING BRIDGE LIGHT STANDARD
Scale: 3/4" = 1'-0"

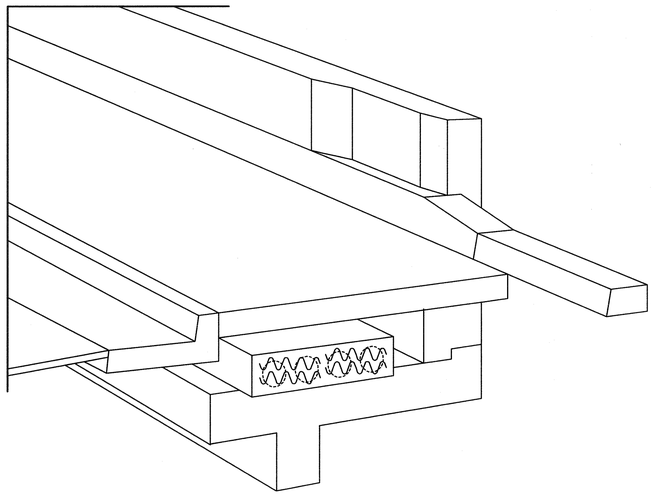

REBUILT CONCRETE END POST NO. 1 PARTIAL ISOMETRIC VIEW
Not to Scale

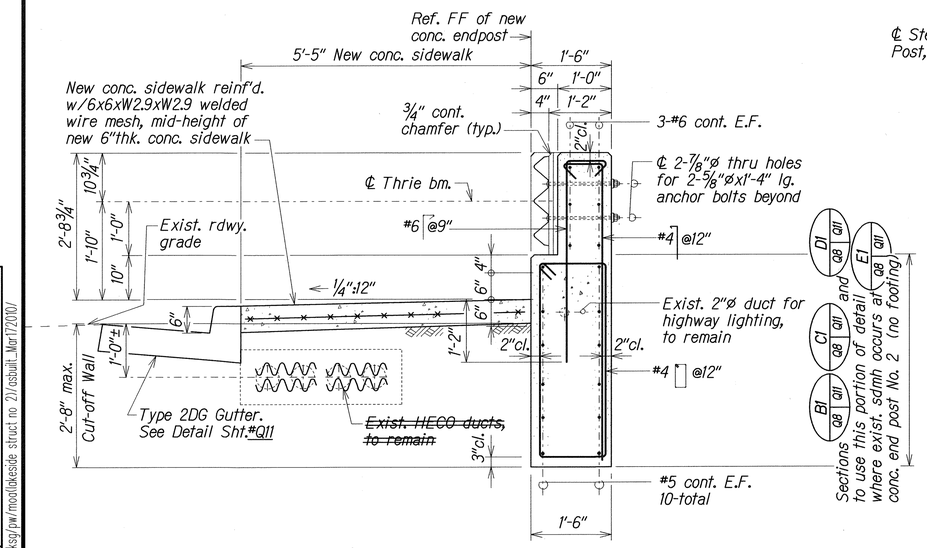

SECTION E1 (Q8 | Q12)
Scale: 3/4" = 1'-0"

LEGEND FOR AS-BUILT POSTINGS	
~~	Squiggly line for as-built deletion
~~100.00~~	Double line for as-built deletion
Roadway	Text for as-built posting

LOCATION 3, LAKESIDE STRUCTURE NO. 2 BRIDGE RAILING and END POST UPGRADE
NORTH FRONTAGE ROAD ℄ 27+71± to 30+19±

STATE OF HAWAII
DEPARTMENT OF TRANSPORTATION
HIGHWAYS DIVISION
LOCATION 3, LAKESIDE STRUCTURE NO. 2
BRIDGE RAILING and END POST UPGRADE
TYPICAL SECTIONS, DETAIL at EXISTING LIGHT STANDARD and END POST PARTIAL ISOMETRIC VIEW
MOANALUA FREEWAY, North Frontage Resurfacing
Project No. H201A-01-06M
Scale: As Noted — Date: Apr, 2008

SHEET No. Q12 OF 18 SHEETS

ORIGINAL PLAN	SURVEY PLOTTED BY XXX	DATE APR 2008
	DRAWN BY "	"
	TRACED BY "	"
NOTE BOOK	DESIGNED BY XXX	APR 2008
	QUANTITIES BY XXX	APR 2008
	CHECKED BY XXX	APR 2008

n:\r_d12cb.dgn
N:_d12cb.dgn
db4/d:/usr2/ksg/pw/moolakeside struct no 2\/ostuilt_Mar17\2010\

"AS-BUILT"

FED. ROAD DIST. NO.	STATE	PROJ. NO.	FISCAL YEAR	SHEET NO.	TOTAL SHEETS
HAWAII	HAW.	H201A-01-06M	2008	42	64

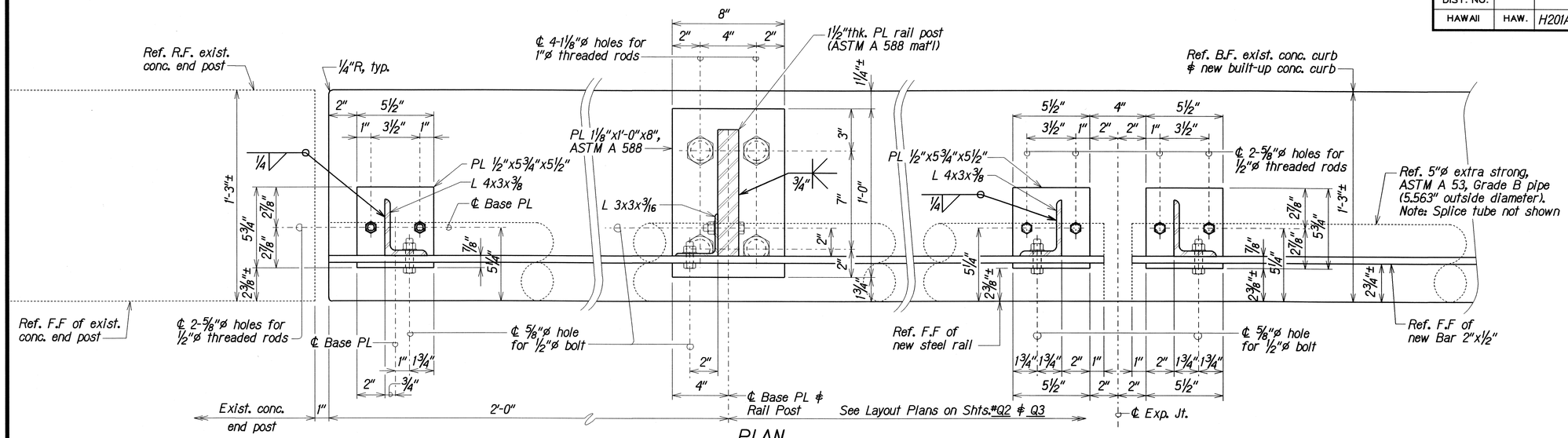

PLAN

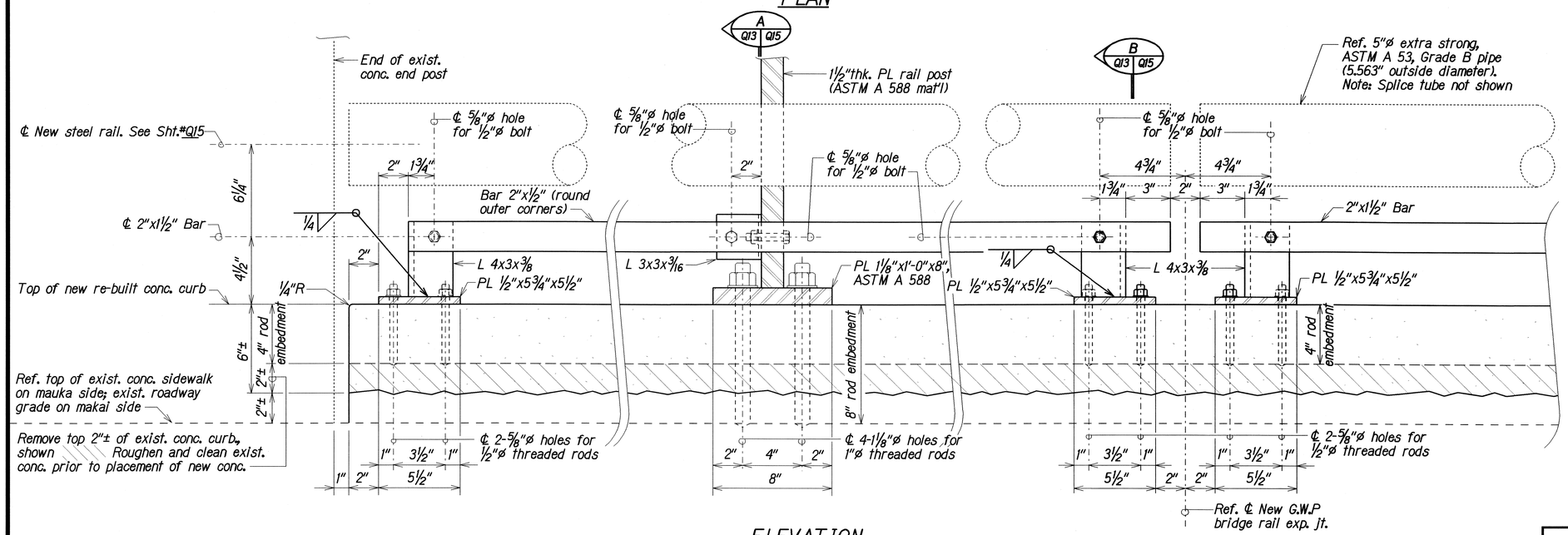

ELEVATION

NEW STEEL SPACER BAR DETAILS

LOCATION 3, LAKESIDE STRUCTURE NO. 2 BRIDGE RAILING and END POST UPGRADE

NORTH FRONTAGE ROAD ℄ 27+71± to 30+19±

Scale: 3" = 1'-0"

ORIGINAL PLAN	SURVEY PLOTTED BY XXX	DATE APR 2008
	DRAWN BY XXX	APR 2008
NOTE BOOK	TRACED BY XXX	APR 2008
	DESIGNED BY XXX	APR 2008
Q:\moab\q13.dgn	QUANTITIES BY XXX	APR 2008
	CHECKED BY XXX	APR 2008

STATE OF HAWAII
DEPARTMENT OF TRANSPORTATION
HIGHWAYS DIVISION

LOCATION 3, LAKESIDE STRUCTURE NO. 2
BRIDGE RAILING and END POST UPGRADE
NEW STEEL SPACER BAR DETAILS

MOANALUA FREEWAY
North Frontage Resurfacing
Project No. H201A-01-06M

Scale: As Noted — Date: Apr. 2008

SHEET No. Q13 OF 18 SHEETS

FED. ROAD DIST. NO.	STATE	PROJ. NO.	FISCAL YEAR	SHEET NO.	TOTAL SHEETS
HAWAII	HAW.	H201A-01-06M	2008	43	64

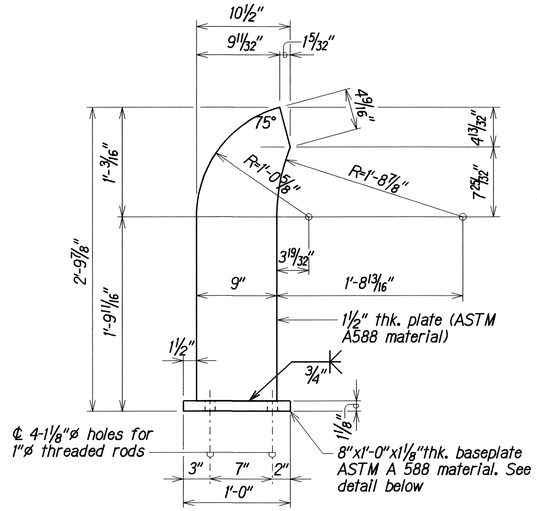

STEEL POST DETAIL

Scale: 1½" = 1'-0"

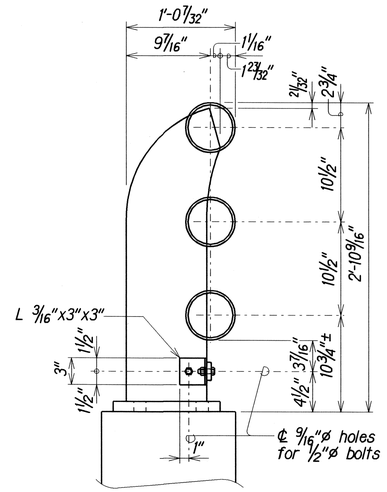

STEEL RAIL DETAIL SHOWING SPACER BAR

Scale: 1½" = 1'-0"

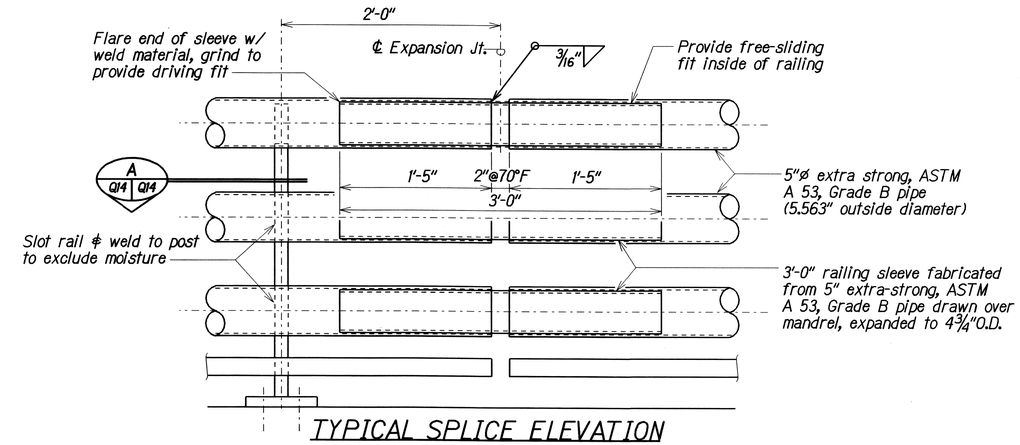

TYPICAL SPLICE ELEVATION at EXPANSION JOINT

Scale: 1½" = 1'-0"

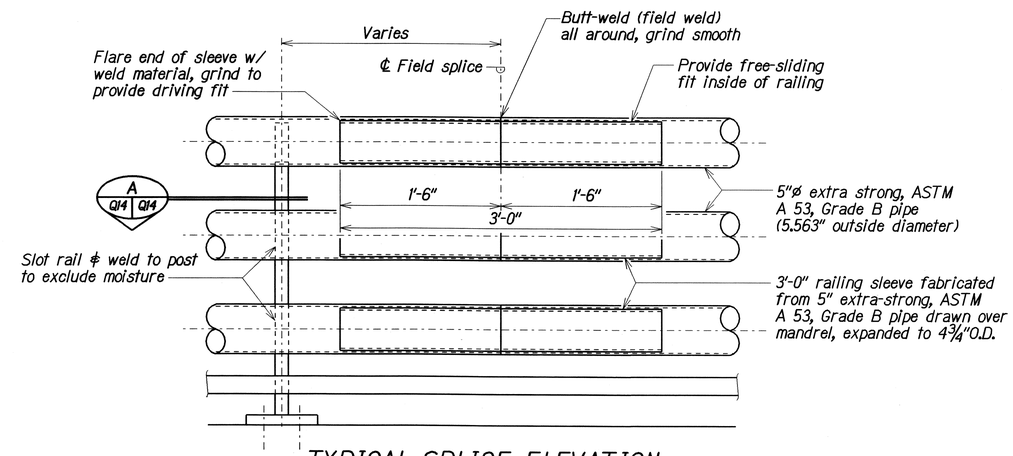

TYPICAL SPLICE ELEVATION at FIELD SPLICE

Scale: 1½" = 1'-0"

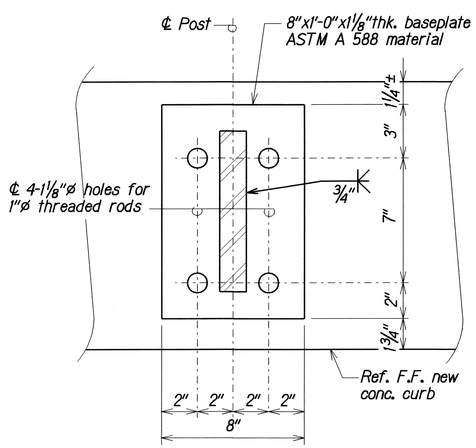

TYPICAL POST BASE PLATE DETAIL

Scale: 3" = 1'-0"

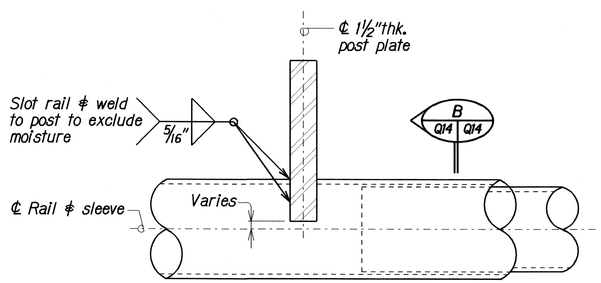

TYPICAL POST to RAIL WELD DETAIL

A Q14 Q14

Scale: 3" = 1'-0"

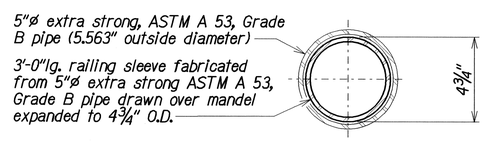

TYPICAL RAIL and SLEEVE SECTION

B Q14 Q14

Scale: 3" = 1'-0"

G.W.P. STEEL BRIDGE RAIL DETAILS

LOCATION 3, LAKESIDE STRUCTURE NO. 2 BRIDGE RAILING and END POST UPGRADE
NORTH FRONTAGE ROAD ≊ 27+71± to 30+19±

ORIGINAL PLAN	SURVEY PLOTTED BY XXX	DATE
	DRAWN BY	APR 2008
	TRACED BY	APR 2008
NOTE BOOK	DESIGNED BY XXX	APR 2008
	QUANTITIES BY XXX	APR 2008
	CHECKED BY XXX	APR 2008

STATE OF HAWAII
DEPARTMENT OF TRANSPORTATION
HIGHWAYS DIVISION

LOCATION 3, LAKESIDE STRUCTURE NO. 2
BRIDGE RAILING and END POST UPGRADE
G.W.P. STEEL BRIDGE RAIL DETAILS
MOANALUA FREEWAY
North Frontage Resurfacing
Project No. H201A-01-06M

Scale: As Noted — Date: Apr. 2008

SHEET No. Q14 OF 18 SHEETS

FED. ROAD DIST. NO.	STATE	PROJ. NO.	FISCAL YEAR	SHEET NO.	TOTAL SHEETS
HAWAII	HAW.	H201A-01-06M	2008	44	64

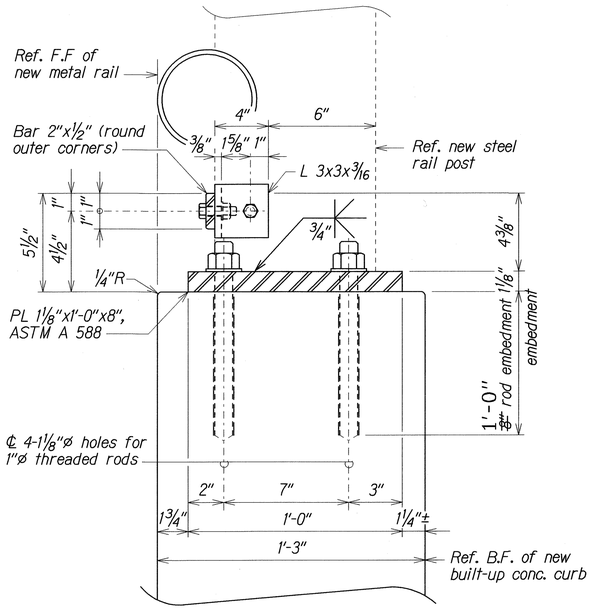

SECTION A
Scale: 3" = 1'-0"
Q13 | Q15

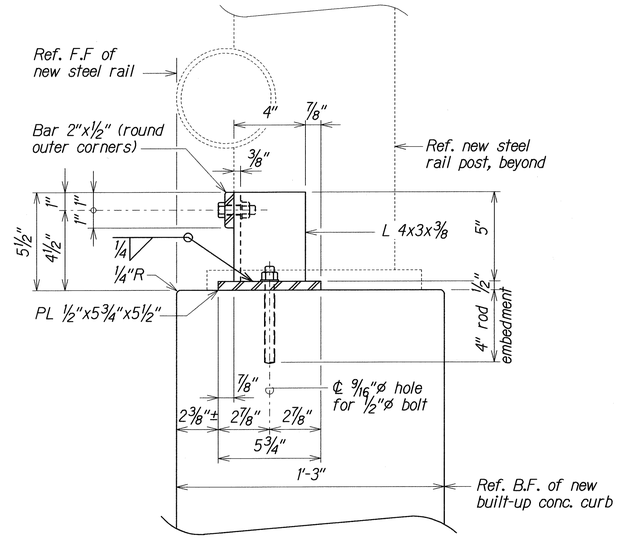

SECTION B
Scale: 3" = 1'-0"
Q13 | Q15

NEW STEEL SPACER BAR SUPPORT DETAILS

LOCATION 3, LAKESIDE STRUCTURE NO. 2 BRIDGE RAILING and END POST UPGRADE
NORTH FRONTAGE ROAD ℄ 27+71± to 30+19±

LEGEND FOR AS-BUILT POSTINGS

~~	Squiggly line for as-built deletion
~~100.00~~	Double line for as-built deletion
Roadway	Text for as-built posting

ORIGINAL PLAN	SURVEY PLOTTED BY	XXX	DATE
	DRAWN BY	XXX	APR 2008
	TRACED BY	XXX	APR 2008
NOTE BOOK	DESIGNED BY	XXX	APR 2008
nlr_q15ab.dgn	QUANTITIES BY	XXX	APR 2008
N/A	CHECKED BY	XXX	APR 2008

dc4/d:/usr2/ksp/pw/moanlakeside struct no 2/asbuilt_Mar172010/

STATE OF HAWAII
DEPARTMENT OF TRANSPORTATION
HIGHWAYS DIVISION

LOCATION 3, LAKESIDE STRUCTURE NO. 2
BRIDGE RAILING and END POST UPGRADE
NEW STEEL SPACER BAR SUPPORT DETAILS
MOANALUA FREEWAY
North Frontage Resurfacing
Project No. H201A-01-06M

Scale: As Noted | Date: Apr, 2008

SHEET No. Q15 OF 18 SHEETS

"AS-BUILT"

FED. ROAD DIST. NO.	STATE	PROJ. NO.	FISCAL YEAR	SHEET NO.	TOTAL SHEETS
HAWAII	HAW.	H201A-01-06M	2008	44	64

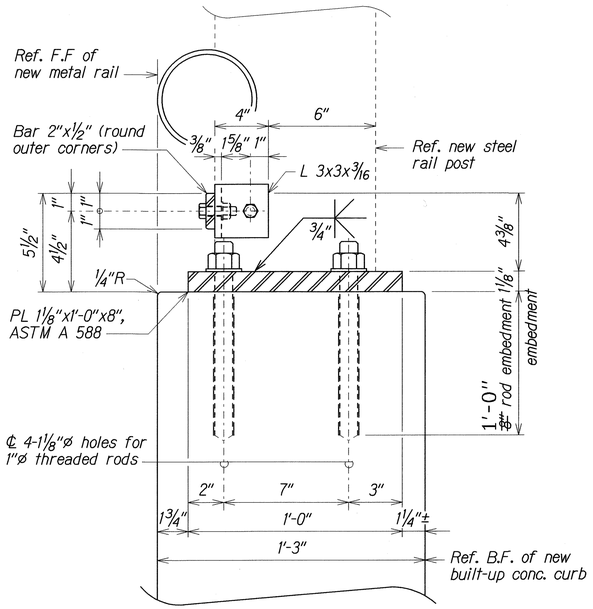

SECTION A
Scale: 3" = 1'-0"
Q13 | Q15

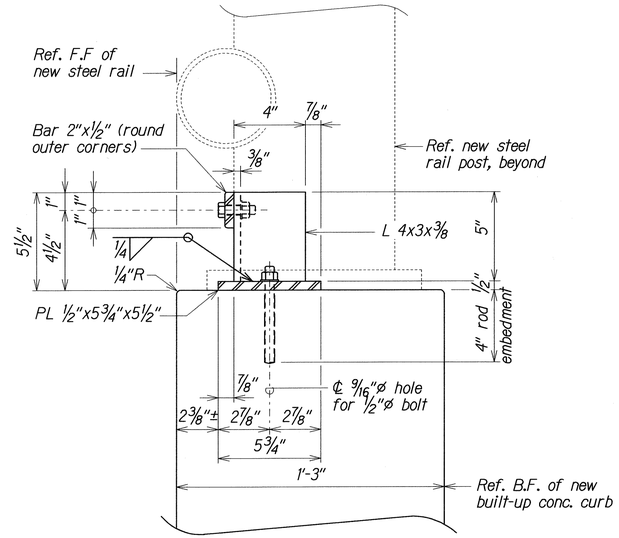

SECTION B
Scale: 3" = 1'-0"
Q13 | Q15

NEW STEEL SPACER BAR SUPPORT DETAILS

LOCATION 3, LAKESIDE STRUCTURE NO. 2 BRIDGE RAILING and END POST UPGRADE
NORTH FRONTAGE ROAD ℄ 27+71± to 30+19±

LEGEND FOR AS-BUILT POSTINGS

~~	Squiggly line for as-built deletion
~~100.00~~	Double line for as-built deletion
Roadway	Text for as-built posting

ORIGINAL PLAN	SURVEY PLOTTED BY	XXX	DATE
	DRAWN BY	XXX	APR 2008
	TRACED BY	XXX	APR 2008
NOTE BOOK	DESIGNED BY	XXX	APR 2008
nlr_q15ab.dgn	QUANTITIES BY	XXX	APR 2008
N/A	CHECKED BY	XXX	APR 2008

dc4/d:/usr2/ksp/pw/moanlakeside struct no 2/asbuilt_Mar172010/

STATE OF HAWAII
DEPARTMENT OF TRANSPORTATION
HIGHWAYS DIVISION

LOCATION 3, LAKESIDE STRUCTURE NO. 2
BRIDGE RAILING and END POST UPGRADE
NEW STEEL SPACER BAR SUPPORT DETAILS
MOANALUA FREEWAY
North Frontage Resurfacing
Project No. H201A-01-06M

Scale: As Noted | Date: Apr, 2008

SHEET No. Q15 OF 18 SHEETS

"AS-BUILT"

FED. ROAD DIST. NO.	STATE	PROJ. NO.	FISCAL YEAR	SHEET NO.	TOTAL SHEETS
HAWAII	HAW.	H201A-01-06M	2008	45	64

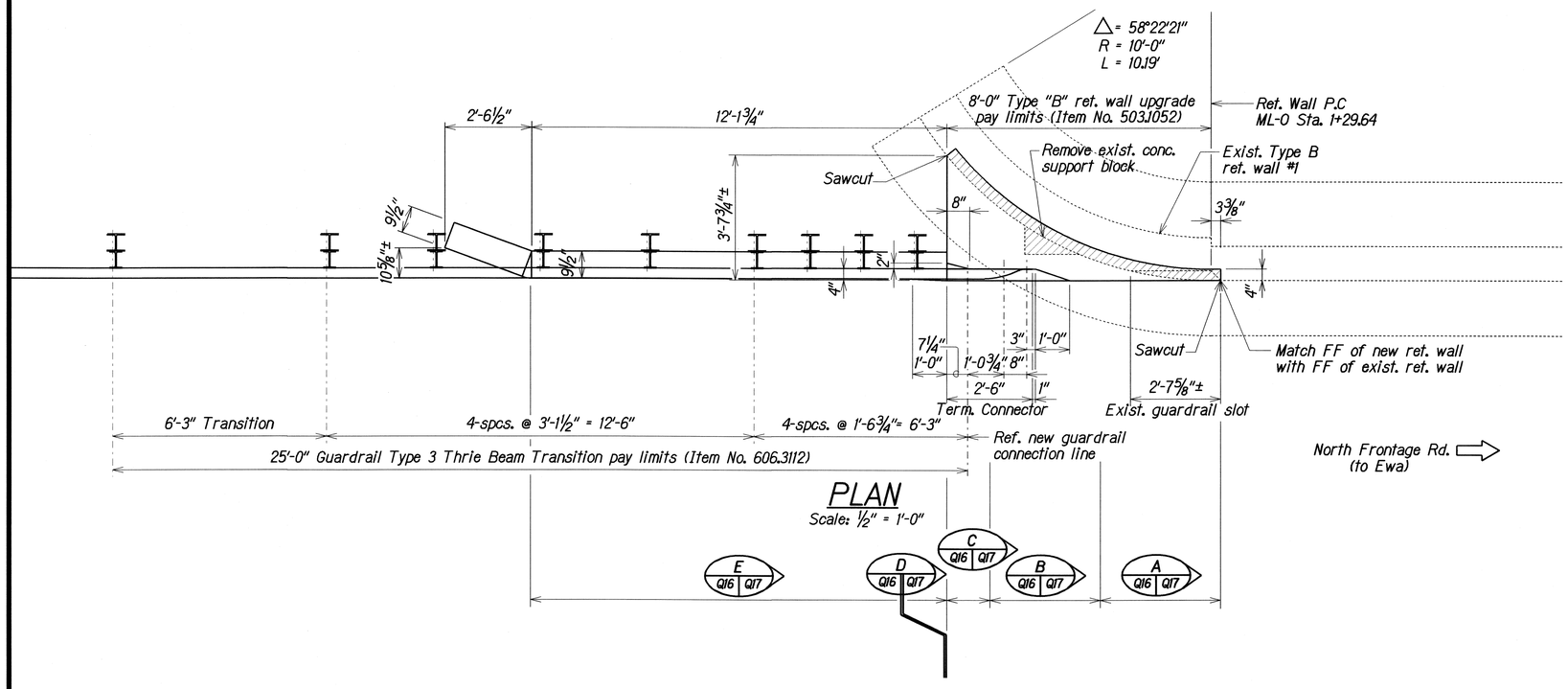

PLAN

Scale: ½" = 1'-0"

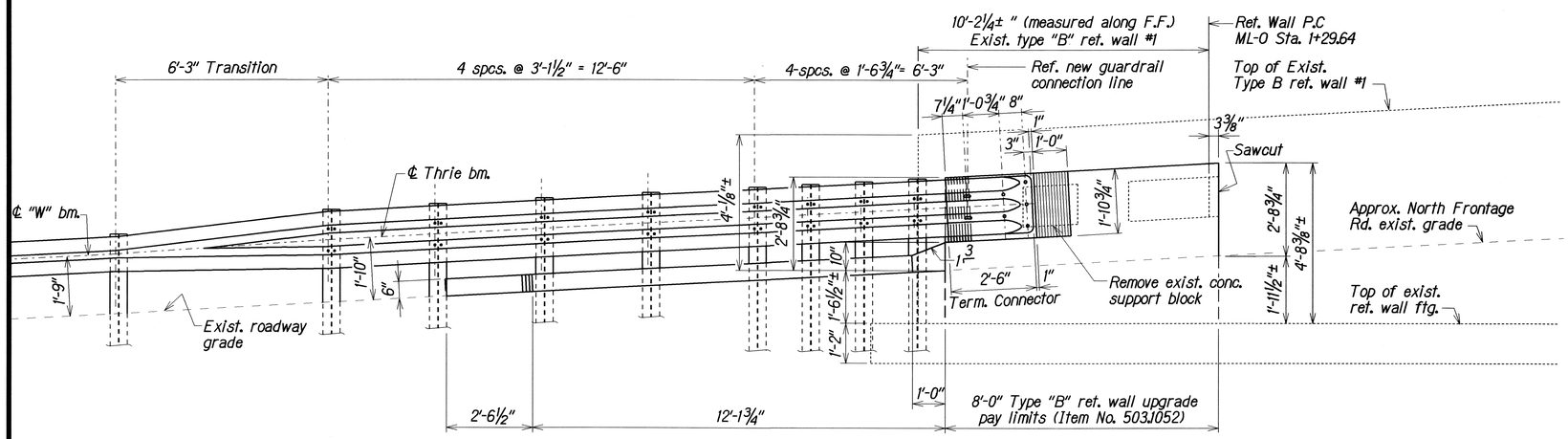

ELEVATION

Scale: ½" = 1'-0"

LOCATION 4, TYPE "B" RETAINING WALL NO. 1 UPGRADE RAMP ML-O ℄ 1+35±

ORIGINAL PLAN	SURVEY PLOTTED BY	XXX	DATE APR 2008
	DRAWN BY		APR 2008
	TRACED BY	XXX	APR 2008
NOTE BOOK	DESIGNED BY	XXX	APR 2008
	QUANTITIES BY	XXX	APR 2008
9moab016.dgn	CHECKED BY	XXX	APR 2008

STATE OF HAWAII
DEPARTMENT OF TRANSPORTATION
HIGHWAYS DIVISION

LOCATION 4, TYPE "B"
RETAINING WALL NO. 1 UPGRADE
PLAN and ELEVATION

MOANALUA FREEWAY
North Frontage Resurfacing
Project No. H201A-01-06M

Scale: As Noted — Date: Apr. 2008

SHEET No. Q16 OF 18 SHEETS

FED. ROAD DIST. NO.	STATE	PROJ. NO.	FISCAL YEAR	SHEET NO.	TOTAL SHEETS
HAWAII	HAW.	H201A-01-06M	2008	46	64

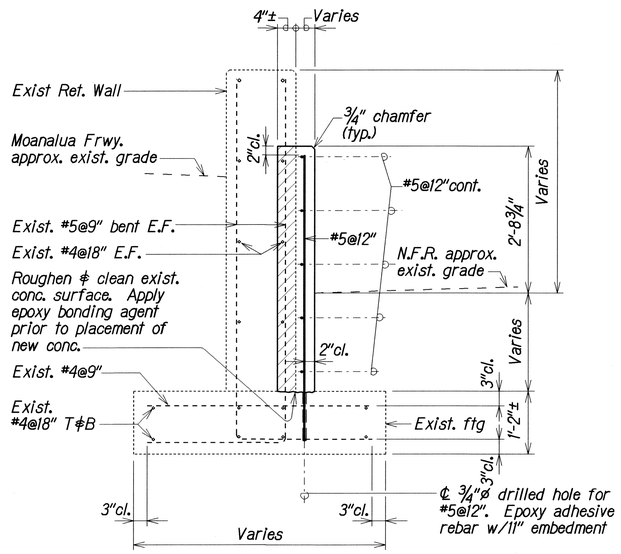

SECTION A (Q16 | Q17)
Scale: 3/4" = 1'-0"

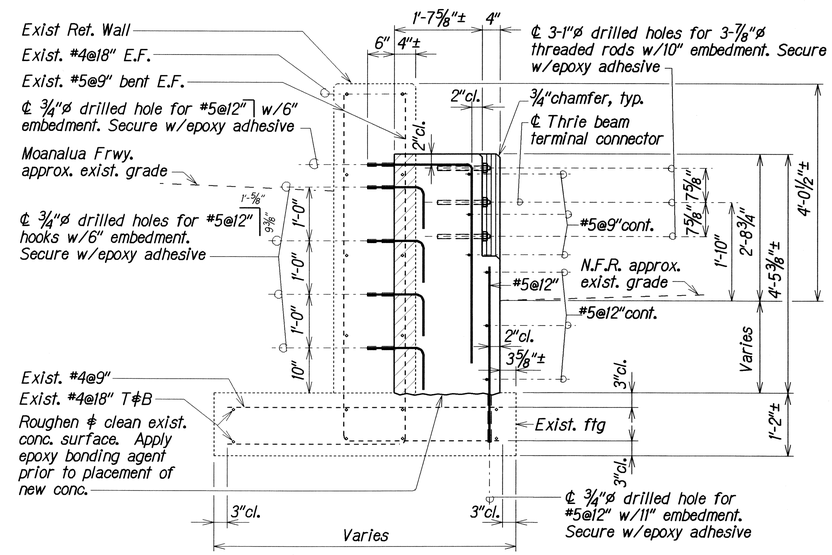

SECTION B (Q16 | Q17)
Scale: 3/4" = 1'-0"

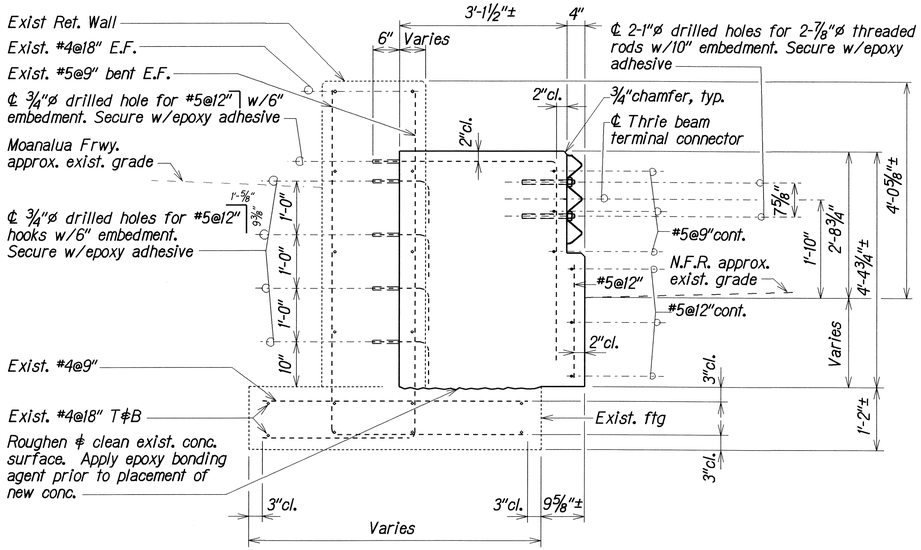

SECTION C (Q16 | Q17)
Scale: 3/4" = 1'-0"

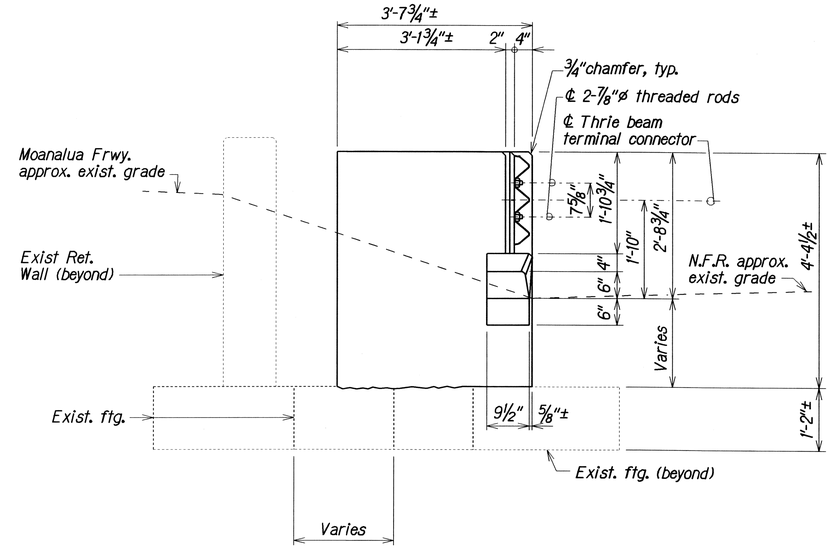

SECTION D (Q16 | Q17)
Scale: 3/4" = 1'-0"

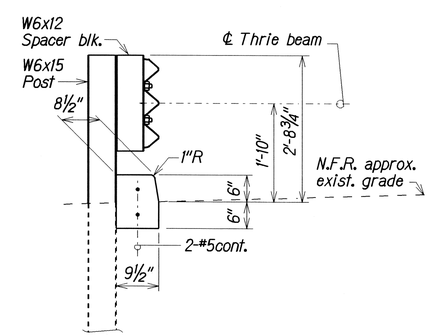

SECTION E (Q16 | Q17)
Scale: 3/4" = 1'-0"

TYPICAL SECTIONS

LOCATION 4, TYPE "B" RETAINING WALL NO. 1 UPGRADE

RAMP ML-O ℄ 1+35±

ORIGINAL PLAN	SURVEY PLOTTED BY	XXX	DATE	APR. 2008
	DRAWN BY	XXX		APR. 2008
	TRACED BY	XXX		APR. 2008
NOTE BOOK	DESIGNED BY	XXX		APR. 2008
	QUANTITIES BY	XXX		APR. 2008
N:\Proj\Q17.dgn	CHECKED BY	XXX		APR. 2008

STATE OF HAWAII
DEPARTMENT OF TRANSPORTATION
HIGHWAYS DIVISION

LOCATION 4, TYPE "B"
RETAINING WALL NO. 1 UPGRADE
TYPICAL SECTIONS
MOANALUA FREEWAY
North Frontage Resurfacing
Project No. H201A-01-06M

Scale: As Noted
Date: Apr. 2008

SHEET No. Q17 OF 18 SHEETS

FED. ROAD DIST. NO.	STATE	PROJ. NO.	FISCAL YEAR	SHEET NO.	TOTAL SHEETS
HAWAII	HAW.	H201A-01-06M	2008	47	64

NOTES:

1. For details not shown, see "DOT Standard Plan" Sht. #TE-57.

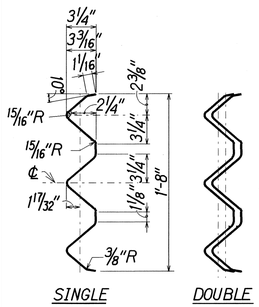

SECTION THRU RAIL ELEMENT
Scale: 1½" = 1'-0"

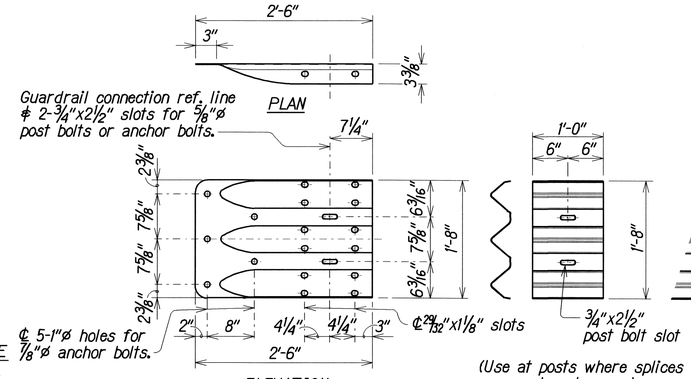

TERMINAL CONNECTOR
Scale: 1" = 1'-0"

BACKUP PLATE
Scale: 1" = 1'-0"

(Use at posts where splices do not occur.)

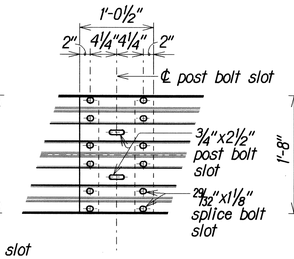

RAIL SPLICE
Scale: 1" = 1'-0"

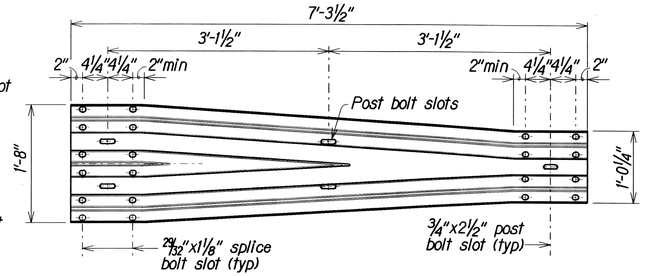

TRANSITION SECTION
Scale: 1" = 1'-0"

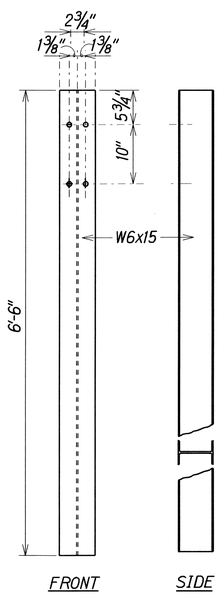

POST DETAILS
Scale: 1" = 1'-0"

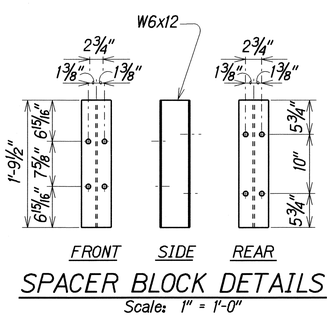

SPACER BLOCK DETAILS
Scale: 1" = 1'-0"

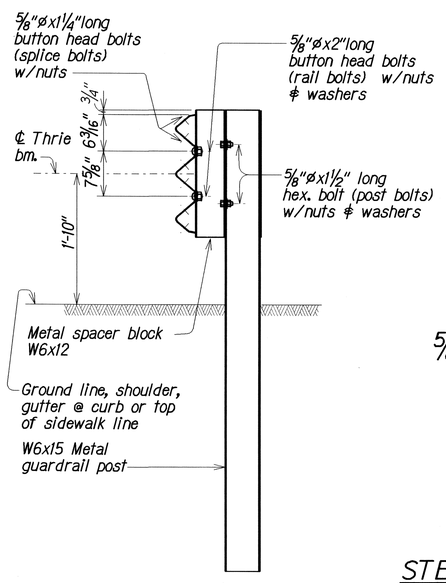

TYPICAL SECTION
METAL GUARDRAIL ON METAL POST WITH METAL SPACER BLOCK
Scale: 1" = 1'-0"

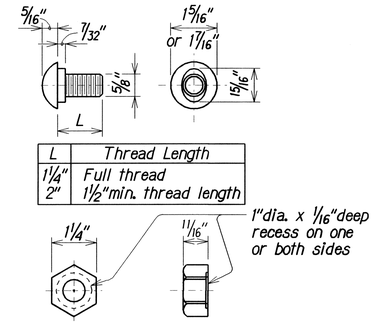

L	Thread Length
1¼"	Full thread
2"	1½"min. thread length

5/8"ø BUTTON HEAD BOLT ∢ RECESS NUT
Scale: 6" = 1'-0"

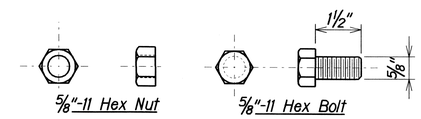

5/8"ø HEX BOLT ∢ NUT
Scale: 6" = 1'-0"

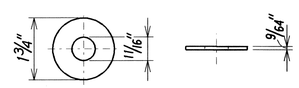

STEEL WASHER FOR 5/8"ø BOLT
Scale: 6" = 1'-0"

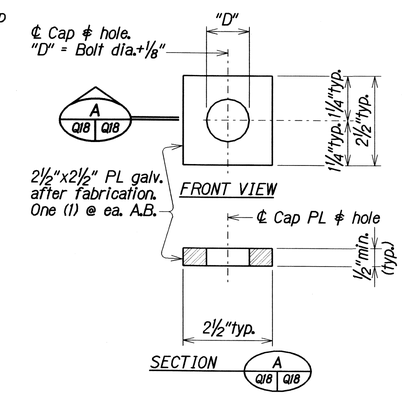

CAP (BEARING) PLATE DETAIL
Scale: 6" = 1'-0"

METAL GUARDRAIL TYPE 3 THRIE BEAM AND APPURTENANCES DETAILS

ORIGINAL PLAN	SURVEY PLOTTED BY	XXX	DATE	APR 2008
	DRAWN BY			
NOTE BOOK	TRACED BY	XXX		APR 2008
	DESIGNED BY	XXX		APR 2008
9moabq18.dgn	QUANTITIES BY	XXX		APR 2008
	CHECKED BY	XXX		APR 2008

STATE OF HAWAII
DEPARTMENT OF TRANSPORTATION
HIGHWAYS DIVISION

METAL GUARDRAIL TYPE 3 THRIE BEAM and APPURTENANCES DETAILS

MOANALUA FREEWAY
North Frontage Resurfacing
Project No. H201A-01-06M

Scale: As Noted
Date: Apr. 2008

SHEET No. Q18 OF 18 SHEETS

FED. ROAD DIST. NO.	STATE	FED. AID PROJ. NO.	FISCAL YEAR	SHEET NO.	TOTAL SHEETS
HAWAII	HAW.	~~F-078-1(7)~~ H201A-01-06M	~~1971~~ 2008	~~207~~ 48	~~302~~ 64

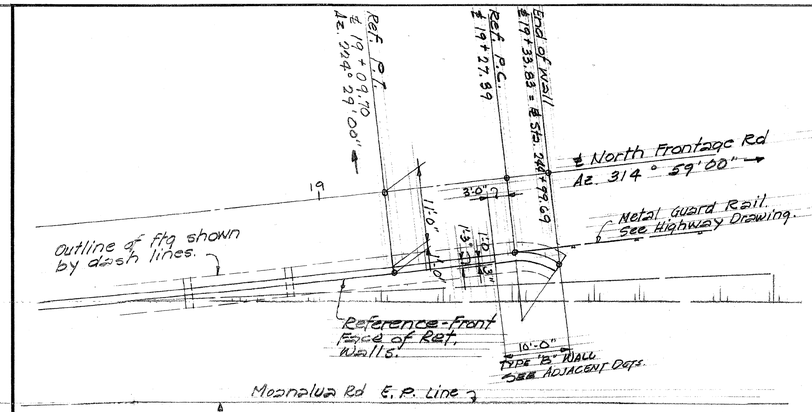

PLAN

SCALE: 1" = 10'-0"

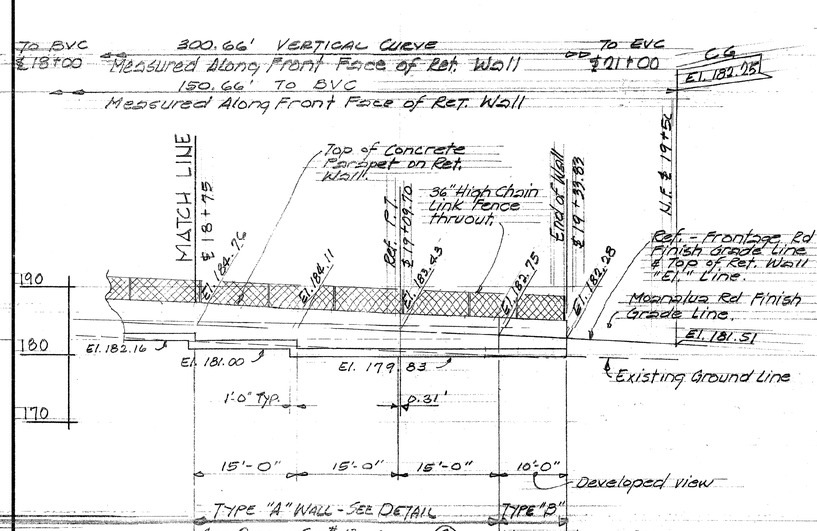

ELEVATION

SCALE: 1" = 10'-0"

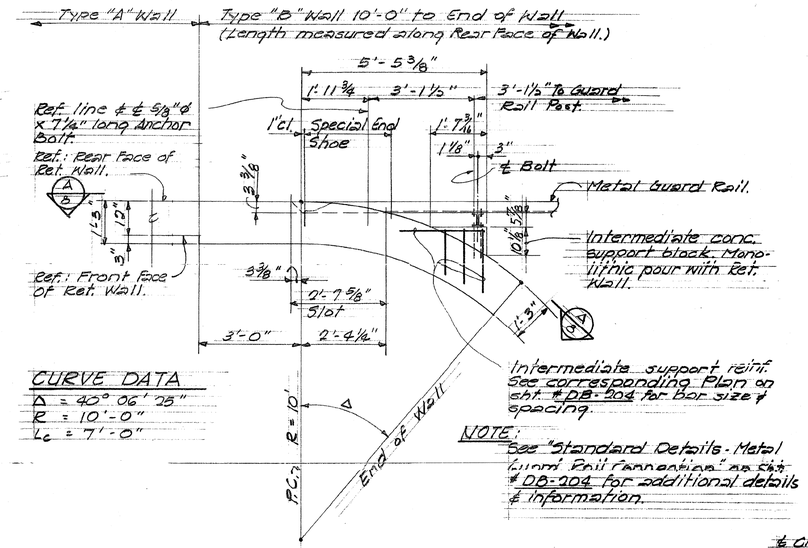

CURVE DATA
Δ = 40° 06' 08"
R = 10'-0"
Lc = 7'-0"

NOTE:
See "Standard Details - Metal Guard Rail Connection" on sht. # DB-204 for additional details & information.

PLAN

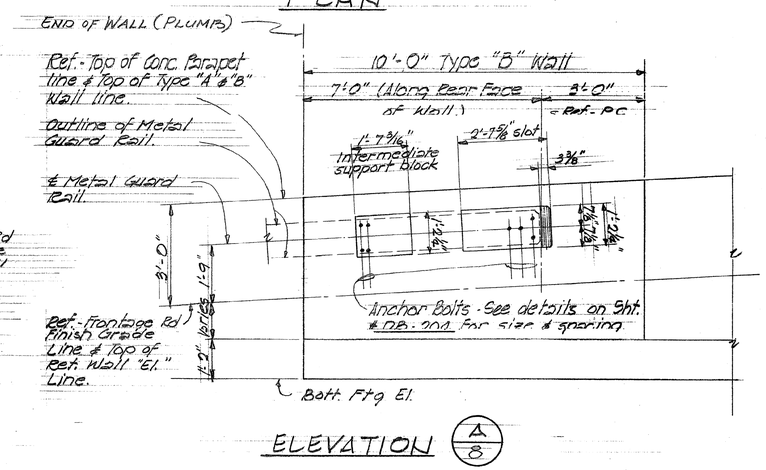

ELEVATION (A/8)

TYPE "B" WALL DETAILS

Scale: 1/2" = 1'-0"

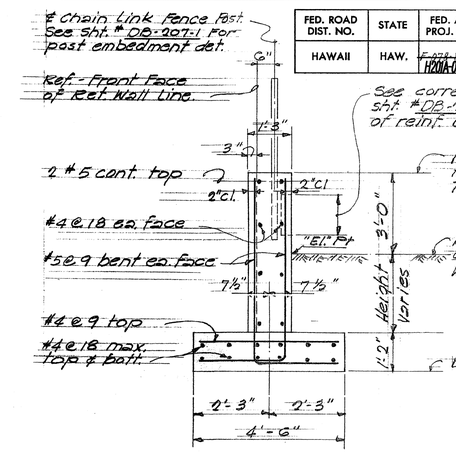

TYPICAL SECTION THRU TYPE "B" WALL

Scale: 1/2" = 1'-0"

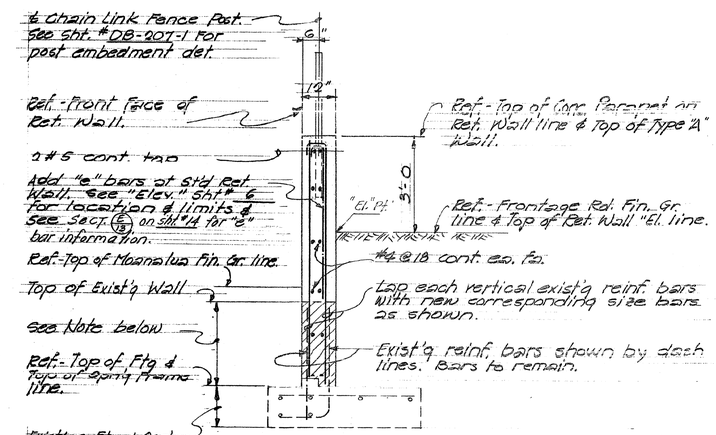

Note:
Hatch area indicates limits of exist'g temporary class "D" conc. stem. Remove class "D" conc. only. Exist'g reinf. bars to remain and cleaned.

TREATMENT OF EXISTING TEMPORARY WALL DETAIL

Scale: 1/2" = 1'-0"

ORIGINAL PLAN	SURVEY PLOTTED BY	DATE
	DRAWN BY	
	TRACED BY	
	NOTE BOOK	DESIGNED BY
	No.	QUANTITIES BY
		CHECKED BY

THIS SHEET IS FOR INFORMATION PURPOSES ONLY

STATE OF HAWAII
DEPARTMENT OF TRANSPORTATION
HIGHWAYS DIVISION

LOCATION 2, TYPE "B" RETAINING WALL NO. 2
RETAINING WALL EXTENSION DETAILS
MOANALUA FREEWAY, NORTH FRONTAGE RESURFACING
Project No. H201A-01-06M

Scale: N.T.S. Date: Apr. 2008

SHEET No. E1 OF 10 SHEETS

STATE OF HAWAII
DEPARTMENT OF TRANSPORTATION
HIGHWAYS DIVISION

~~NORTH FRONTAGE RET. WALL~~
~~EXTENSION~~
~~℄ Sta. 19+95.00 to ℄ Sta. 24+99.69~~
~~MOANALUA ROAD~~
~~F.A.P. Proj. No. F-078-1(7)~~

Scale: ~~As Noted~~ ~~Aug. 1970~~

SHEET No. ~~8~~ OF ~~15~~ SHEETS

FED. ROAD DIST. NO.	STATE	FED. AID PROJ. NO.	FISCAL YEAR	SHEET NO.	TOTAL SHEETS
HAWAII	HAW.	~~F-076-1(7)~~ H201A-01-06M	~~1971~~ 2008	~~233~~ 49	~~382~~ 64

Revised: July 20, 1971

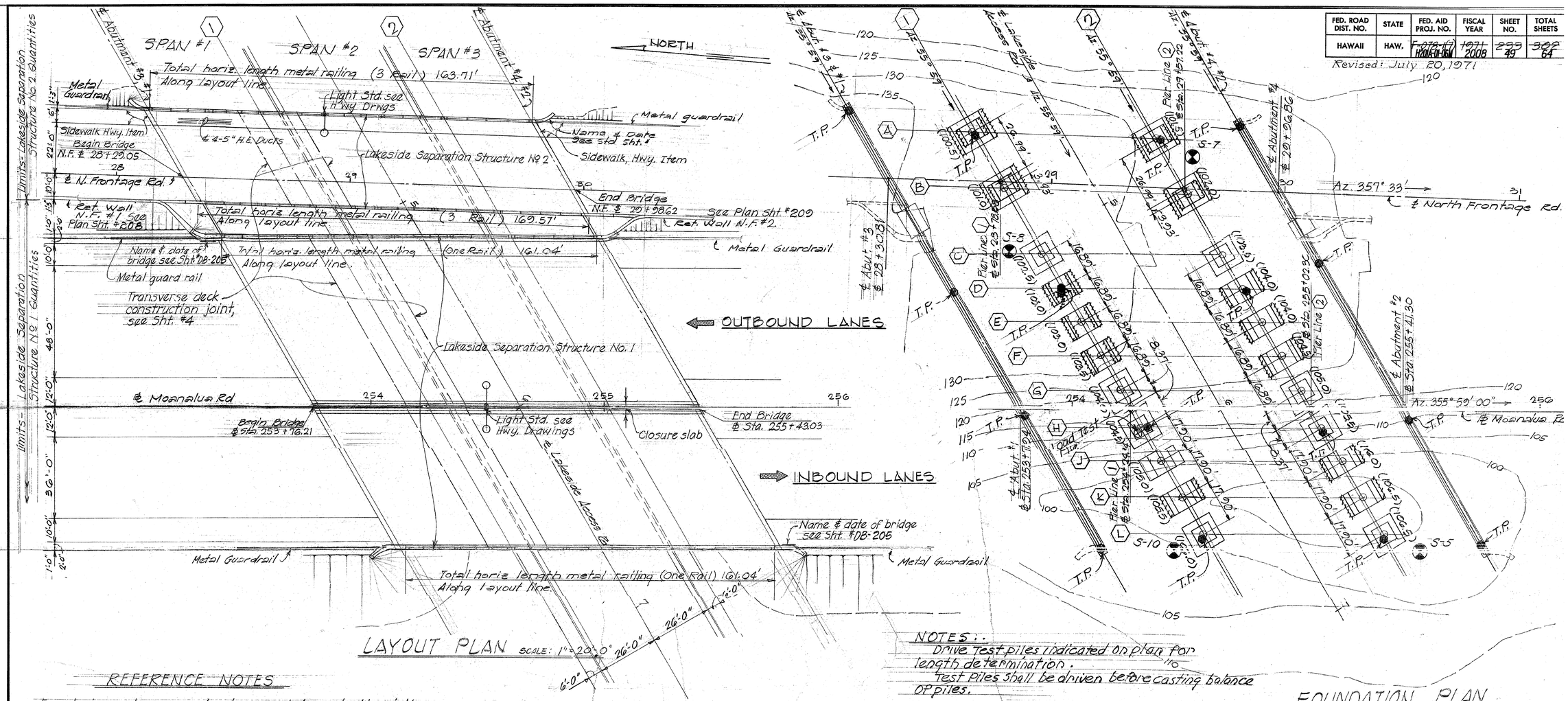

LAYOUT PLAN

SCALE: 1" = 20'-0"

REFERENCE NOTES

For design notes, general notes, symbols and abbreviations, refer to Sht. #T-1.

Pile capacity - 32 tons.

THIS SHEET IS FOR INFORMATION PURPOSES ONLY

STATE OF HAWAII
DEPARTMENT OF TRANSPORTATION
HIGHWAYS DIVISION

LOCATION 3, LAKESIDE STRUCTURE NO. 2
BRIDGE RAILING & END POST UPGRADE
LAYOUT PLAN & FOUNDATION PLAN

MOANALUA FREEWAY, NORTH FRONTAGE RESURFACING
Project No. H201A-01-06M

Scale: N.T.S. Date: Apr. 2008

SHEET No. E2 OF 10 SHEETS

ORIGINAL PLAN		DATE
	SURVEY PLOTTED BY	
	TRACED BY	
	DESIGNED BY	
	NOTE BOOK	
	CHECKED BY	
No.		

NOTES:

Drive Test piles indicated on plan for length determination.

Test Piles shall be driven before casting balance of piles.

FOUNDATION PLAN

Scale: 1" = 20'-0"

* LAKESIDE SEPARATION STRUCTURE No 2 ESTIMATED QUANTITIES		
Concrete - Footing & Pedestal	(124 c.y.)	Lump Sum
Concrete - All others	(346 c.y.)	Lump Sum
Reinforcing Steel	(122,700 lbs.)	Lump Sum
Filter Material	24	c.y.
Prestressed Girder Type III	(1,160 Lin.Ft.)	Lump Sum
Furnishing - Type I Prestressed Concrete Piles	4,853	Lin. Ft.
Driving Piles	3,536	Lin. Ft.
Pre-drilled for Piles	938	Lin. Ft.
Structural Excavation	437	c.y.
Metal Bridge Railing (Three Rail Combination Type)	333	Lin. Ft.
Driving Concrete Test piles	133	Lin. Ft.

* Does not include R.W. N.F. #1 & #2.
GRP quantities at abutments are included with Moanalua Lakeside Structure quantities.

LAKESIDE SEPARATION STRUCTURE No 1 ESTIMATED QUANTITIES		
Concrete - Footing & Pedestal	(449 c.y.)	Lump Sum
Concrete - All others	(1,092 c.y.)	Lump Sum
Reinforcing Steel	(380,000 lb.)	Lump Sum
Filter Material	78	c.y.
Prestressed Girder Type III	(3,913 Lin.Ft.)	Lump Sum
Furnishing - Type I Prestressed Concrete Piles	16,818	Lin. Ft.
Driving Piles	11,476	Lin. Ft.
Pre-drilled for Piles	3,315	Lin. Ft.
Structural Excavation	1,570	c.y.
Grouted Rubble Paving (GRP)	582	c.y.
Metal Bridge Railing (One Rail Traffic Type)	323	Lin. Ft.
Concrete Bridge Rail & End Post (One Rail Traffic Type)	372	Lin. Ft.
Driving Concrete Test Piles	418	Lin. Ft.
Pile Load Test	1	only

This Sheet Supersedes Sht. No. 233

STATE OF HAWAII
DEPARTMENT OF TRANSPORTATION
HIGHWAYS DIVISION

~~LAKESIDE SEPARATION STRUCTURES~~
~~No 1 & No 2~~
~~N.F. ℄ 28+29.05 TO STA. 29+98.62~~
~~MOANALUA STA. 253+16.21 TO STA. 255+43.03~~
~~LAYOUT PLAN~~
~~MOANALUA ROAD~~ ~~F-076-1(7)~~
~~Aug. 1970~~

SHEET No. ~~1~~ OF ~~20~~ SHEETS

~~ADD. 233~~ 49

Revised: July 20, 1971

FED. ROAD DIST. NO.	STATE	FED. AID PROJ. NO.	FISCAL YEAR	SHEET NO.	TOTAL SHEETS
HAWAII	HAW.	~~F-078-(9)~~ H201A-01-06M	~~1971~~ 2008	~~237~~ 50	~~350~~ 64

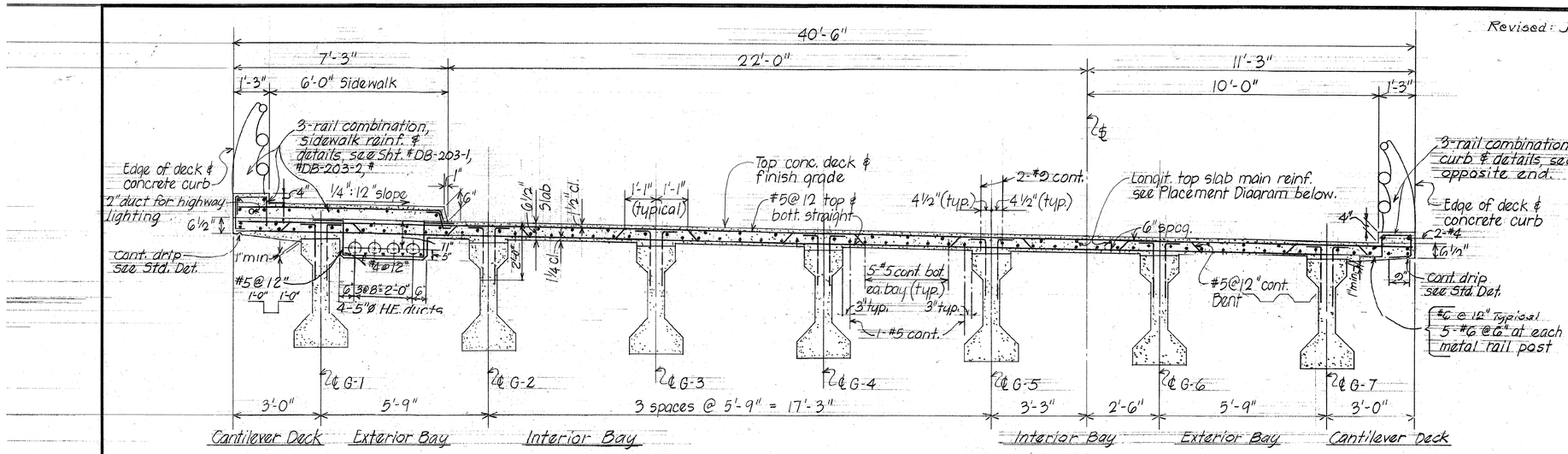

NORMAL DECK SECTION

Scale: 1/2" = 1'-0"

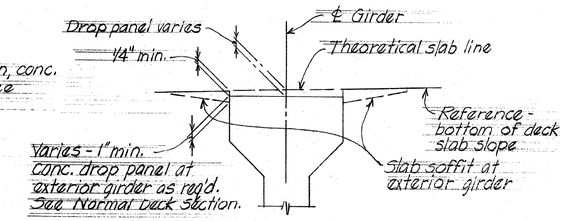

TYPICAL SLAB DROP PANEL DETAIL AT PRESTRESSED GIRDERS

No Scale

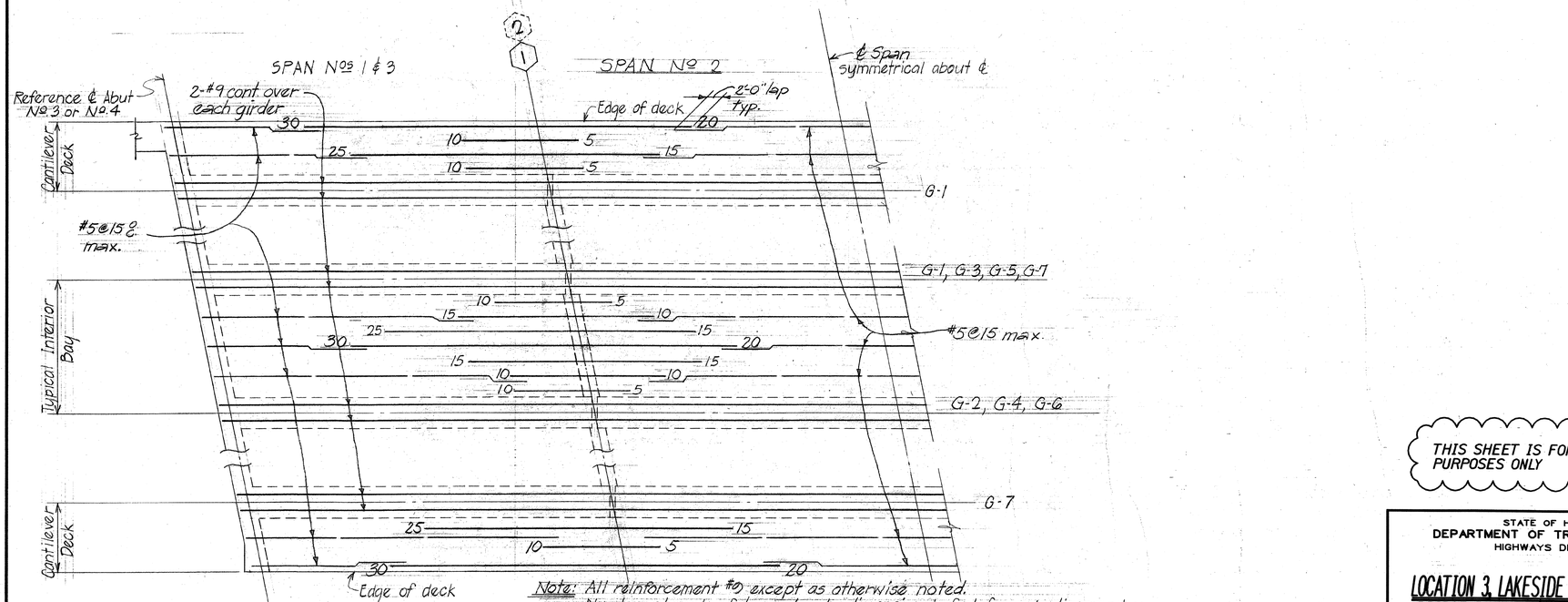

Note: All reinforcement #9 except as otherwise noted.
Number at ends of bars denote dimension in feet from pier line number.
For additional slab reinforcement, see Normal Section & corresponding details.
All #5@15" max. bars shall be extended & lapped 2'-0" min. with the adjacent #9 bars as shown.

TYPICAL PLACEMENT DIAGRAM - DECK SLAB TOP LONGITUDINAL REINFORCEMENT

Scale: Horiz. 1/8" = 1'-0" Vert. 3/8" = 1'-0"

ORIGINAL PLAN		
SURVEY PLOTTED BY	Wiadlo	DATE Aug. '70
DRAWN BY		"
TRACED BY	D. A.T.	"
DESIGNED BY	B.G.	"
QUANTITIES BY	T.O.	"
CHECKED BY	B.K.	"
NOTE BOOK		
No.		

THIS SHEET IS FOR INFORMATION PURPOSES ONLY

This Sheet Supersedes Sht. No. 237

STATE OF HAWAII
DEPARTMENT OF TRANSPORTATION
HIGHWAYS DIVISION

LOCATION 3, LAKESIDE STRUCTURE NO. 2
BRIDGE RAILING & END POST UPGRADE
DECK SECTIONS & DETAILS
MOANALUA FREEWAY, NORTH FRONTAGE RESURFACING
Project No. H201A-01-06M

Scale: N.T.S. Date: Apr. 2008

SHEET No. E3 OF 10 SHEETS

STATE OF HAWAII
DEPARTMENT OF TRANSPORTATION
HIGHWAYS DIVISION

~~LAKESIDE SEPARATION STRUCTURE~~
~~No 2~~
~~DECK SECTIONS & DETAILS~~

~~Moanalua Road~~ ~~F-078-1(9)~~
~~Aug. 1970~~

SHEET No. 5 OF ~~20~~ SHEETS

ADD. ~~237~~ 50

K+E CRYSTALENE® LA 2920 TRACING PAPER

FED. ROAD DIST. NO.	STATE	FED. AID PROJ. NO.	FISCAL YEAR	SHEET NO.	TOTAL SHEETS
HAWAII	HAW.	~~F-070-1(7)~~ H201A-01-06M	~~1971~~ 2008	~~245~~ 51	~~302~~ 64

Revised: July 20, 1971

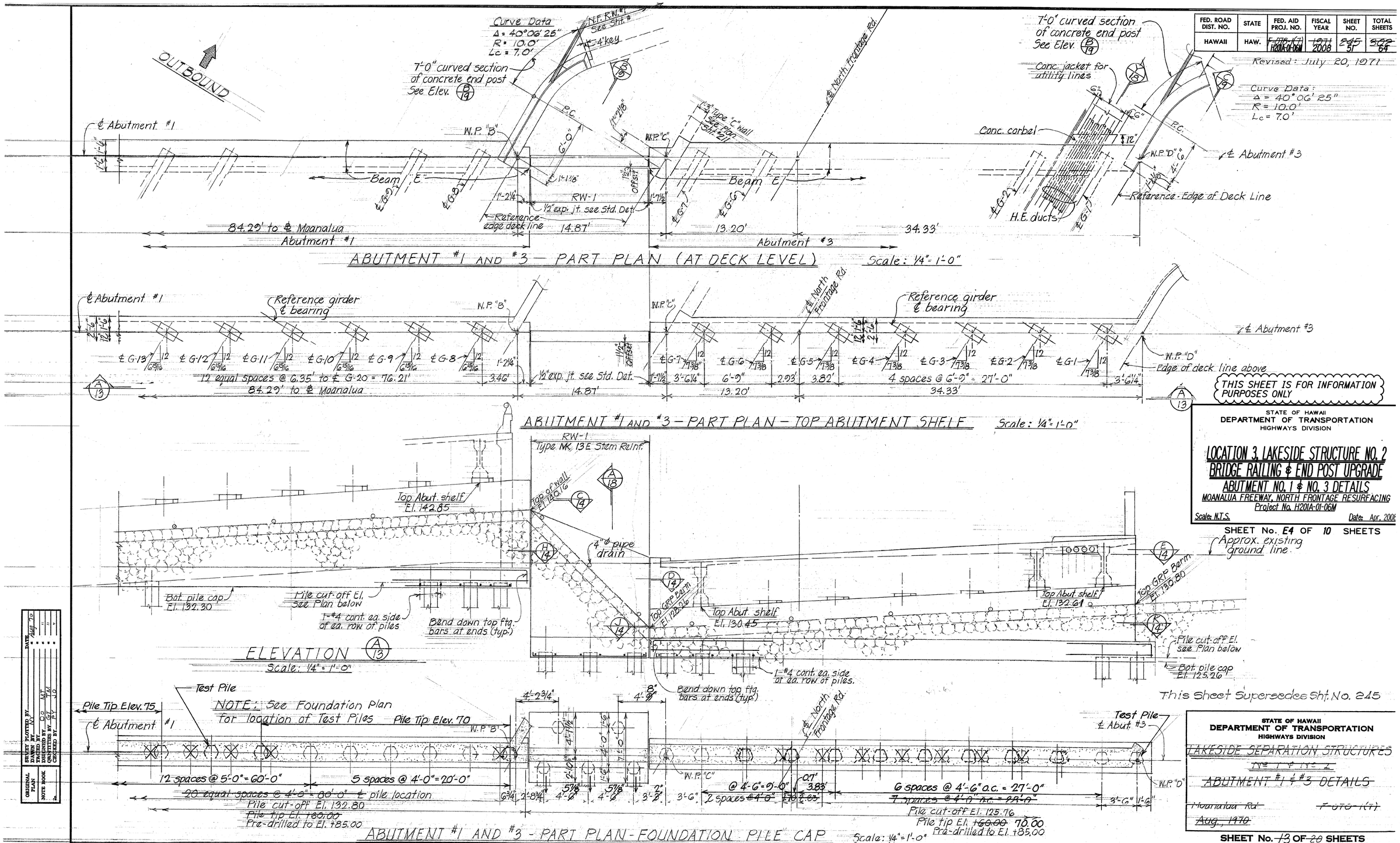

THIS SHEET IS FOR INFORMATION PURPOSES ONLY

STATE OF HAWAII
DEPARTMENT OF TRANSPORTATION
HIGHWAYS DIVISION

LOCATION 3, LAKESIDE STRUCTURE NO. 2
BRIDGE RAILING & END POST UPGRADE
ABUTMENT NO. 1 & NO. 3 DETAILS
MOANALUA FREEWAY, NORTH FRONTAGE RESURFACING
Project No. H201A-01-06M

Scale: N.T.S. Date: Apr. 2006

SHEET No. E4 OF 10 SHEETS

This Sheet Supersedes Sht. No. 245

STATE OF HAWAII
DEPARTMENT OF TRANSPORTATION
HIGHWAYS DIVISION

~~LAKESIDE SEPARATION STRUCTURES~~
~~No. 1 & No. 2~~
~~ABUTMENT #1 & #3 DETAILS~~
~~Moanalua Rd~~ ~~F-070-1(7)~~
~~Aug., 1970~~

SHEET No. ~~13~~ OF ~~20~~ SHEETS

~~ADD. 245~~ 51

ORIGINAL PLAN	DESIGNED BY	DATE Aug 70
	DRAWN BY	"
	TRACED BY	"
	DESIGNED BY	"
	CHECKED BY	"
NOTE BOOK No.		

FED. ROAD DIST. NO.	STATE	FED. AID PROJ. NO.	FISCAL YEAR	SHEET NO.	TOTAL SHEETS
HAWAII	HAW.	~~F-078-1(7)~~	~~1971~~	~~246~~	~~302~~
		H201A-01-06M	2008	52	64

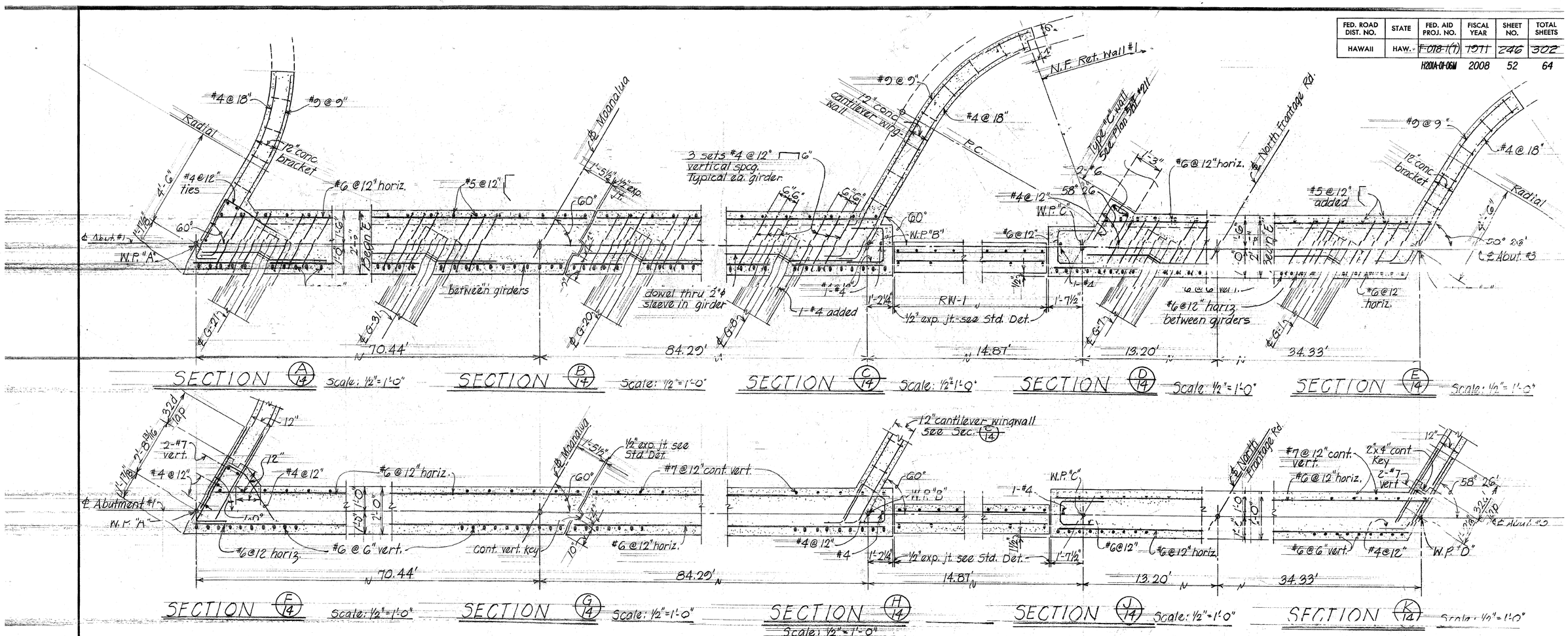

NOTE: REF. IN GIR. TO CST C 101
Standard 1/2" expansion joint and key details.

THIS SHEET IS FOR INFORMATION PURPOSES ONLY

STATE OF HAWAII
DEPARTMENT OF TRANSPORTATION
HIGHWAYS DIVISION

LOCATION 3, LAKESIDE STRUCTURE NO. 2
BRIDGE RAILING & END POST UPGRADE
ABUTMENT NO. 1 & NO. 3 - SECTIONS AND DETAILS
MOANALUA FREEWAY, NORTH FRONTAGE RESURFACING
Project No. H201A-01-06M

Scale: N.T.S. Date: Apr. 2008

SHEET No. E5 OF 10 SHEETS

STATE OF HAWAII
DEPARTMENT OF TRANSPORTATION
HIGHWAYS DIVISION

~~LAKESIDE SEPARATION STRUCTURES~~
~~No 1 & No 2~~
~~ABUTMENT #1 & #3 SECTIONS & DETAILS~~

~~Moanalua Rd.~~ ~~F-078-1(7)~~
~~Aug., 1970~~

SHEET No. ~~14~~ OF ~~20~~ SHEETS

ORIGINAL PLAN	SURVEY PLOTTED BY	DATE Aug 76
	DRAWN BY	"
	TRACED BY	"
NOTE BOOK	DESIGNED BY LJT	DG
	QUANTITIES BY M.	G.L.
No.	CHECKED BY L.G.	P.Y.

PRINTED ON NO. 1000H CLEARPRINT

FED. ROAD DIST. NO.	STATE	FED. AID PROJ. NO.	FISCAL YEAR	SHEET NO.	TOTAL SHEETS
HAWAII	HAW.	~~F-078-1(2)~~ HAWA-01-06M	~~1971~~ 2008	~~247~~ 53	~~325~~ 64

Revised: July 20, 1971

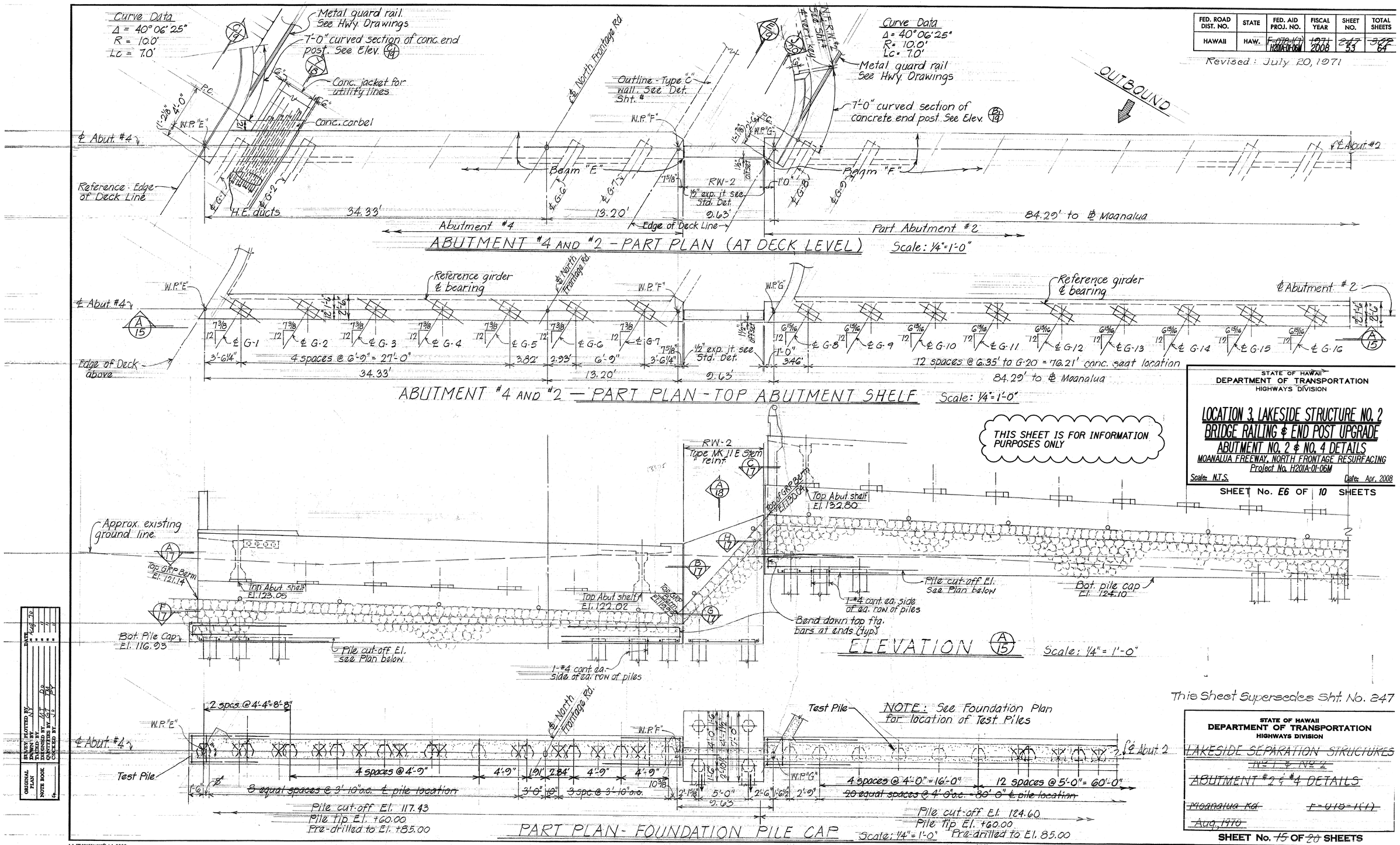

STATE OF HAWAII
DEPARTMENT OF TRANSPORTATION
HIGHWAYS DIVISION

LOCATION 3, LAKESIDE STRUCTURE NO. 2
BRIDGE RAILING & END POST UPGRADE
ABUTMENT NO. 2 & NO. 4 DETAILS
MOANALUA FREEWAY, NORTH FRONTAGE RESURFACING
Project No. H201A-01-06M

Scale: N.T.S. Date: Apr. 2008

SHEET No. E6 OF 10 SHEETS

This Sheet Supersedes Sht. No. 247

STATE OF HAWAII
DEPARTMENT OF TRANSPORTATION
HIGHWAYS DIVISION

~~LAKESIDE SEPARATION STRUCTURES~~
~~No. 1 & No. 2~~
~~ABUTMENT #2 & #4 DETAILS~~
~~Moanalua Rd.~~ ~~F-078-1(1)~~
~~Aug. 1970~~

SHEET No. ~~15~~ OF ~~20~~ SHEETS

ORIGINAL PLAN	SURVEY PLOTTED BY	DATE
	TRACED BY	
	DESIGNED BY	
NOTE BOOK	CHECKED BY	
No.	CHECKED BY	

ADD. ~~247~~ 53

FED. ROAD DIST. NO.	STATE	FED. AID PROJ. NO.	FISCAL YEAR	SHEET NO.	TOTAL SHEETS
HAWAII	HAW.	~~F-078-(7)~~ ~~H201A-01-06M~~	~~1971~~ 2008	~~249~~ 54	~~366~~ 64

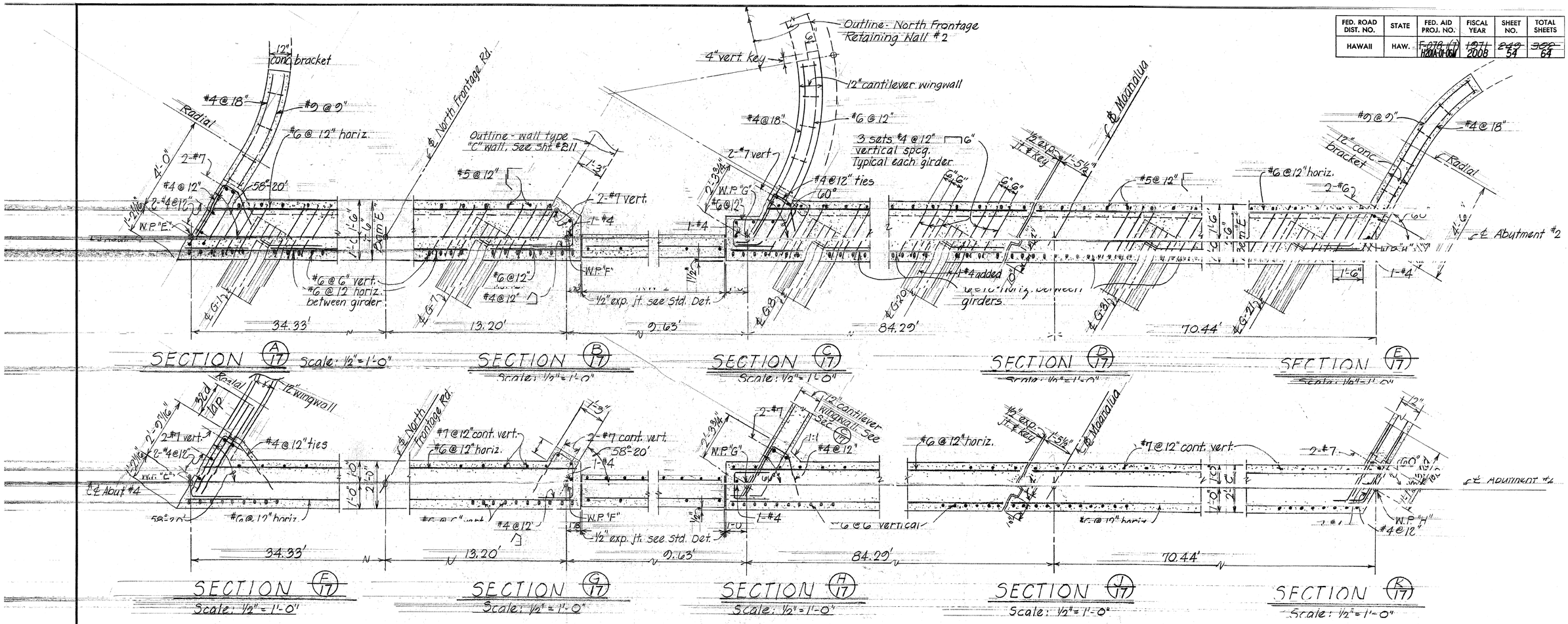

NOTE: Refer to sht. DB-201-2 for Standard 1/2" expansion joint & key details.

ORIGINAL PLAN	SURVEY PLOTTED BY	DATE
	DRAWN BY	Aug '70
	TRACED BY	"
NOTE BOOK	DESIGNED BY	"
	QUANTITIES BY	"
No.	CHECKED BY	"

THIS SHEET IS FOR INFORMATION PURPOSES ONLY

STATE OF HAWAII
DEPARTMENT OF TRANSPORTATION
HIGHWAYS DIVISION

LOCATION NO. 3, LAKESIDE STRUCTURE NO. 2
BRIDGE RAILING & END POST UPGRADE
ABUTMENT NO. 2 & NO. 4 - SECTIONS AND DETAILS
MOANALUA FREEWAY, NORTH FRONTAGE RESURFACING
Project No. H201A-01-06M

Scale: N.T.S. Date: Apr. 2008

SHEET No. E7 OF 10 SHEETS

STATE OF HAWAII
DEPARTMENT OF TRANSPORTATION
HIGHWAYS DIVISION

~~LAKESIDE SEPARATION STRUCTURES~~
~~No 1 & No 2~~
~~ABUTMENT #2 & #4 SECTIONS & DETAILS~~
~~Moanalua Rd.~~ ~~F-078-1(7)~~
~~Aug. 1970~~

SHEET No. ~~17~~ OF ~~20~~ SHEETS

FED. ROAD DIST. NO.	STATE	FED. AID PROJ. NO.	FISCAL YEAR	SHEET NO.	TOTAL SHEETS
HAWAII	HAW.	~~F-078-1(7)~~ ~~H201A-01-06M~~	~~1971~~ 2008	~~251~~ 55	~~302~~ 64

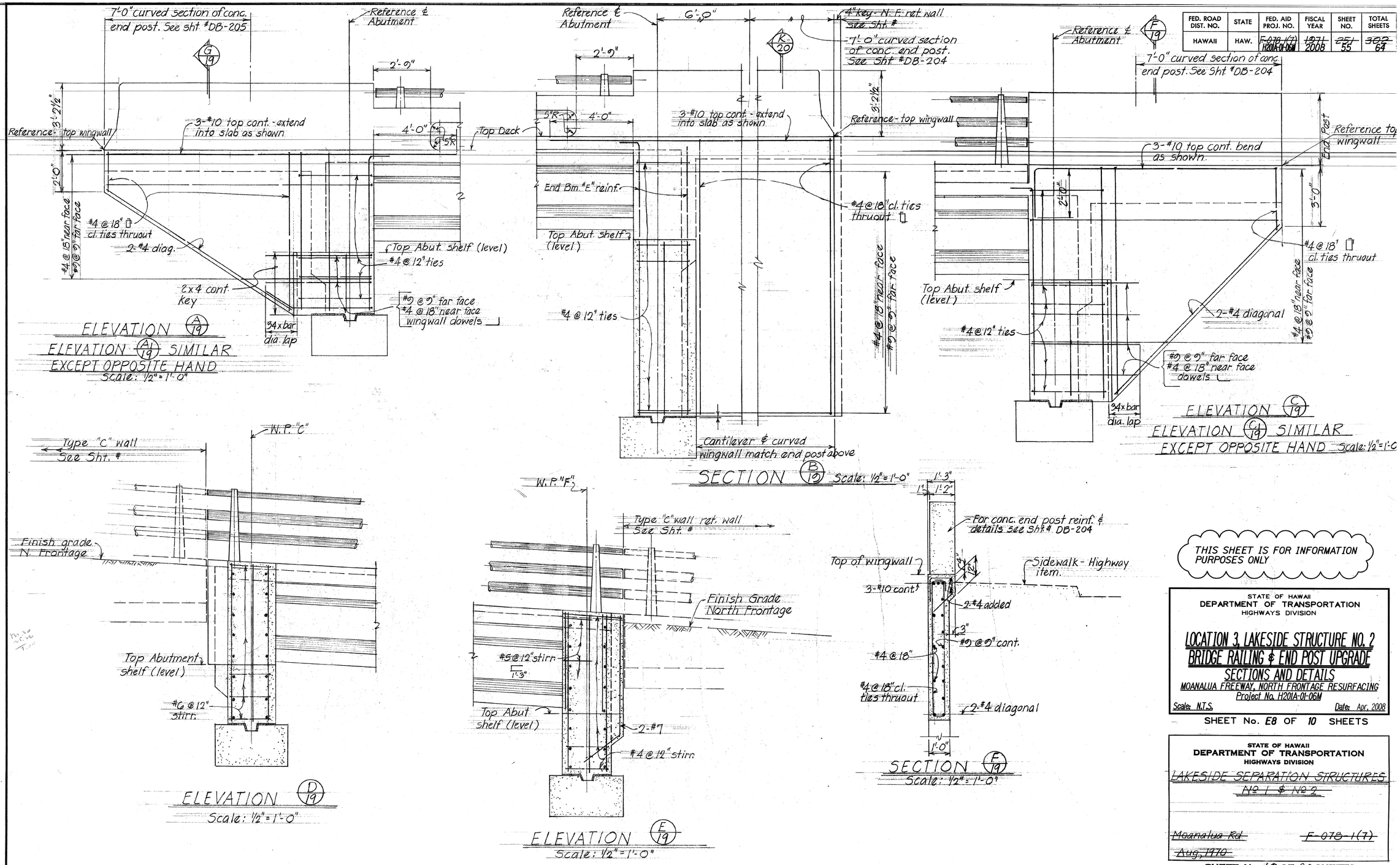

THIS SHEET IS FOR INFORMATION PURPOSES ONLY

STATE OF HAWAII
DEPARTMENT OF TRANSPORTATION
HIGHWAYS DIVISION

LOCATION 3, LAKESIDE STRUCTURE NO. 2
BRIDGE RAILING & END POST UPGRADE
SECTIONS AND DETAILS

MOANALUA FREEWAY, NORTH FRONTAGE RESURFACING
Project No. H201A-01-06M

Scale: N.T.S. Date: Apr. 2008

SHEET No. E8 OF 10 SHEETS

STATE OF HAWAII
DEPARTMENT OF TRANSPORTATION
HIGHWAYS DIVISION

~~LAKESIDE SEPARATION STRUCTURES NO 1 & NO 2~~

~~Moanalua Rd~~ ~~F-078-1(7)~~
~~Aug. 1970~~

SHEET No. ~~19~~ OF ~~20~~ SHEETS

ORIGINAL PLAN	SURVEY PLOTTED BY	DATE Aug 70
	DRAWN BY JV	
	TRACED BY	
NOTE BOOK	DESIGNED BY DO MT	
	COMPUTED BY	
No.	CHECKED BY PSY JO	

STATE OF HAWAII
DEPARTMENT OF TRANSPORTATION
HIGHWAYS DIVISION

LOCATION 3, LAKESIDE STRUCTURE NO. 2
BRIDGE RAILING & END POST UPGRADE
STANDARD DETAILS

MOANALUA FREEWAY, NORTH FRONTAGE RESURFACING
Project No. H201A-01-06M

Scale: N.T.S. Date: Apr. 2008

SHEET No. E9 OF 10 SHEETS

FED. ROAD DIST. NO.	STATE	FED. AID PROJ. NO.	FISCAL YEAR	SHEET NO.	TOTAL SHEETS
HAWAII	HAW.	H201A-01-06M	2008	2 68	3 68

THIS SHEET IS FOR INFORMATION PURPOSES ONLY

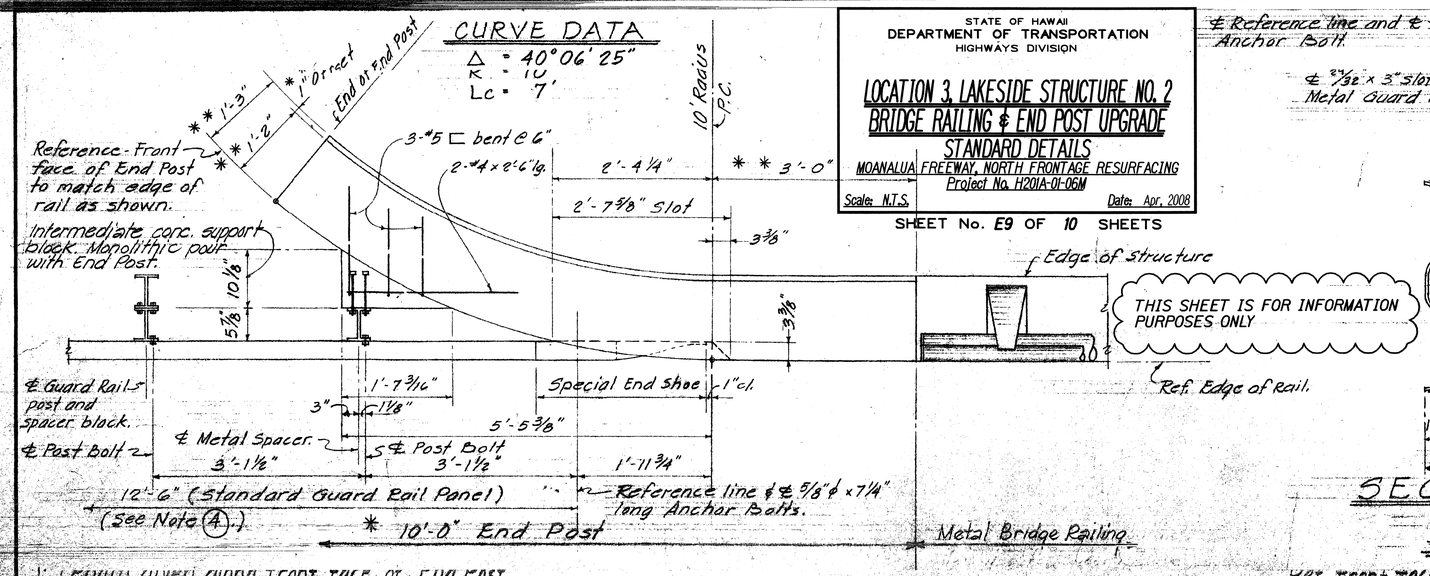

* Length given along front face of End Post.

PLAN
Scale: 1" = 1'-0"

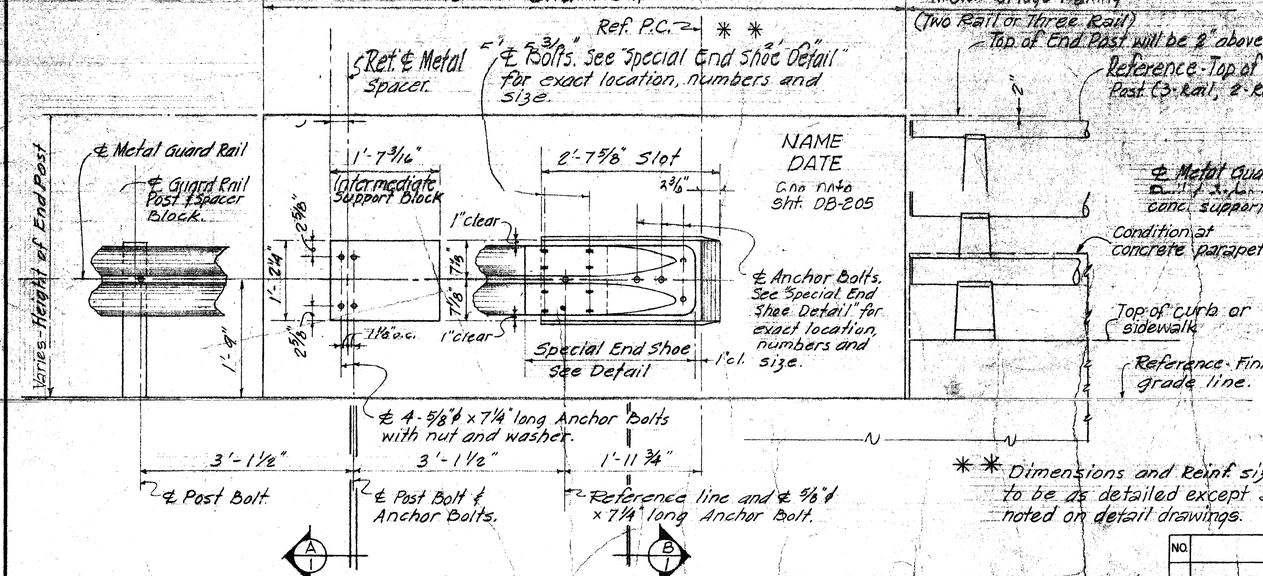

ELEVATION
Scale: 1" = 1'-0"

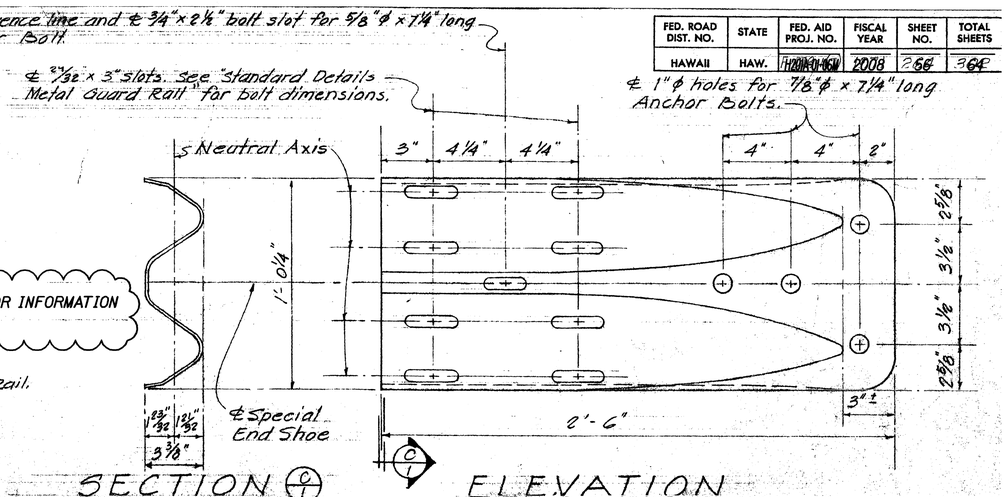

SECTION (C/1) ELEVATION
SPECIAL END SHOE DETAILS
Scale: 3" = 1'-0"

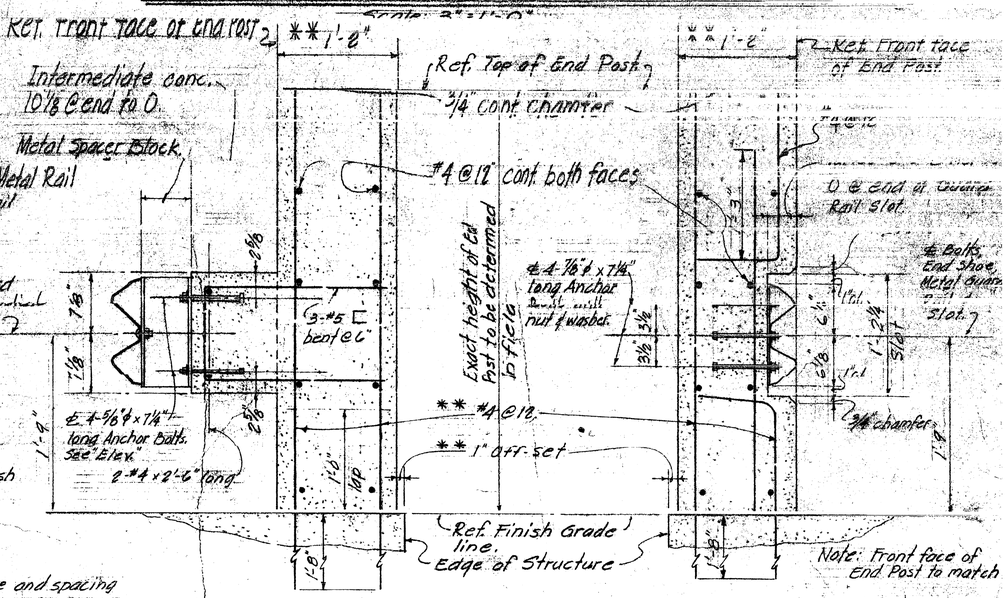

SECTION (A/1) Scale 1 1/2" = 1'-0"

SECTION (B/1) Scale 1 1/2" = 1'-0"

** Dimensions and Reinf. size and spacing to be as detailed except as otherwise noted on detail drawings.

NOTES:
1. All Anchor Bolts shall be High Strength bolts conforming
2. All shoe assembly, including anchor bolts, nuts and washers, shall be galvanized.
3. Special End Shoe shall be Fabricated from 10 gage steel conforming to the requirements of AASHTO 180.
4. First Guard Rail Panel adjoining "Special End Shoe" shall
5. Anchor Bolt length given under bolt head.
6. These details are applicable for Connections to Retaining walls also.

NO.	REVISION	APPROVED BY	DATE

APPROVAL RECOMMENDED: Paul T. Yamashita — BRIDGE DESIGN ENGINEER — DATE 1-23-70

APPROVED: Paul Yamashita — ASSISTANT CHIEF, ENGINEERING — DATE 1-28-70

STATE OF HAWAII
DEPARTMENT OF TRANSPORTATION
HIGHWAYS DIVISION

STANDARD DETAILS
METAL GUARD RAIL CONNECTION AT VERTICAL FACE TYPE END POST

Scale: As shown Date

SHEET No. 6 OF 11 SHEETS

ORIGINAL PLAN | SURVEY PLOTTED BY | DRAWN BY | TRACED BY | DESIGNED BY | QUANTITIES BY | CHECKED BY | DATE
10'S'E BOOK

FED. ROAD DIST. NO.	STATE	FED. AID PROJ. NO.	FISCAL YEAR	SHEET NO.	TOTAL SHEETS
HAWAII	HAW.	~~F-078-1(7)~~ H201A-01-06M	~~1971~~ 2008	~~212~~ 57	~~302~~ 64

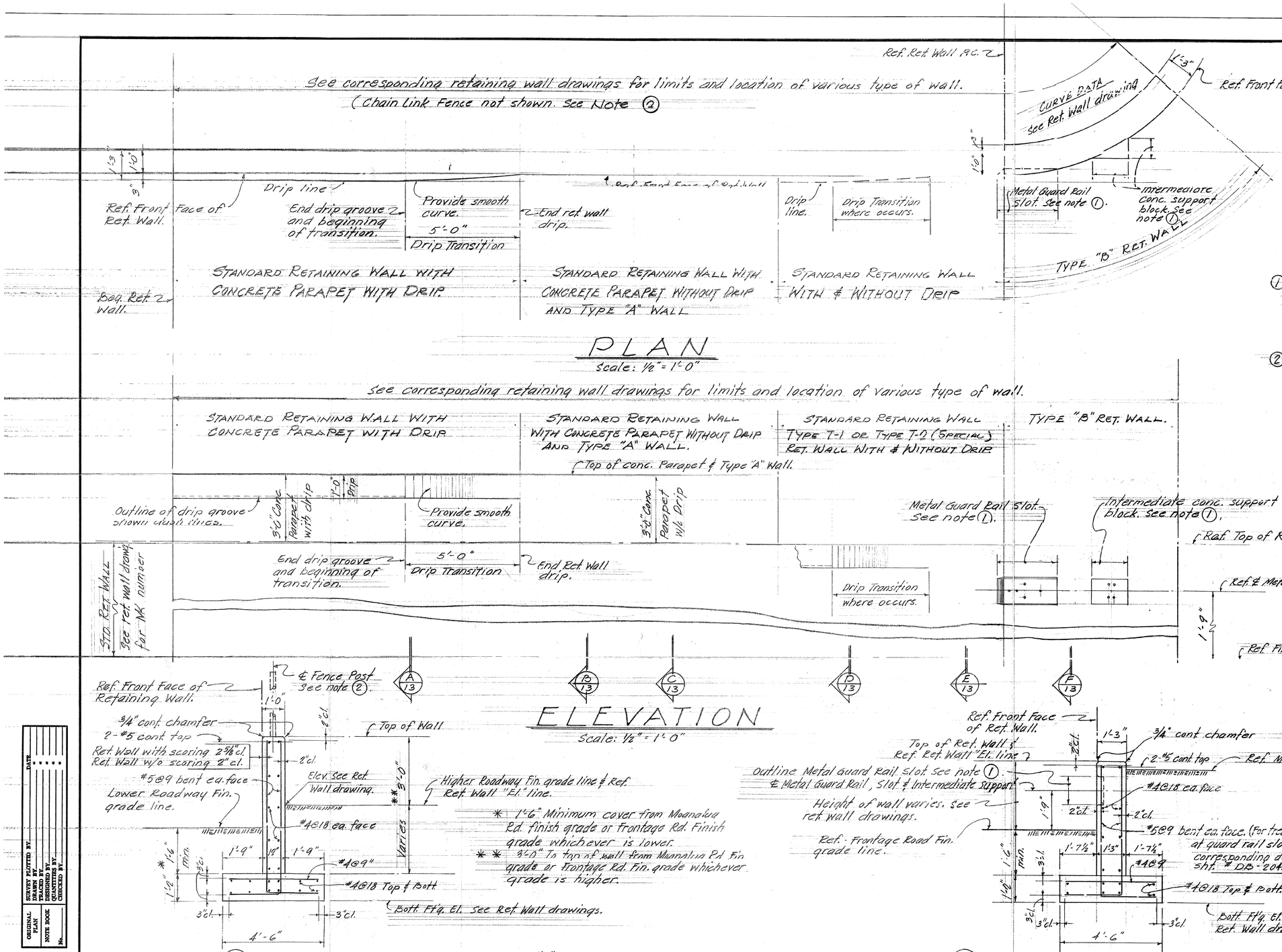

NOTES:

1. For Metal Guard Rail Slot and Intermediate Concrete Support Block Details and Information Only, See "Standard Details - Metal Guard Rail Connection at Vertical Face End Post" on Sheet Nº DB-204.
2. For Location, Limits and Height of Chain Link Fence on Wall, See Corresponding Retaining Wall Drawings. For Fence Post Embedment Detail, See Sheet Nº DB-207-1.

THIS SHEET IS FOR INFORMATION PURPOSES ONLY

STATE OF HAWAII
DEPARTMENT OF TRANSPORTATION
HIGHWAYS DIVISION

LOCATION 4, TYPE "B" RETAINING WALL NO. 1 UPGRADE

TYPICAL RETAINING WALL DETAILS

MOANALUA FREEWAY, NORTH FRONTAGE RESURFACING
Project No. H201A-01-06M

Scale: N.T.S. Date: Apr. 2008

SHEET No. E10 OF 10 SHEETS

STATE OF HAWAII
DEPARTMENT OF TRANSPORTATION
HIGHWAYS DIVISION

~~TYPICAL RET. WALL DETAILS~~

~~MOANALUA ROAD~~
~~F.A.P. Proj. Nº F-078-1(7)~~

Scale: ~~As shown~~ Date: ~~Aug. 1971~~

SHEET No. 13 OF 15 SHEETS

ORIGINAL PLAN | SURVEY PLOTTED BY: | DRAWN BY: | TRACED BY: | DESIGNED BY: | CHECKED BY: | DATE: | NOTE BOOK No.: