FED.ROAD DIST.NO.	STATE	PROJ. NO.	FISCAL YEAR	SHEET NO.	TOTAL SHEETS
HAWAII	HAW.	I-H3-1(75), UNIT II	1997	834	1102

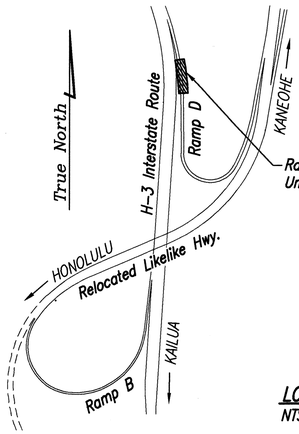

LOCATION MAP
NTS

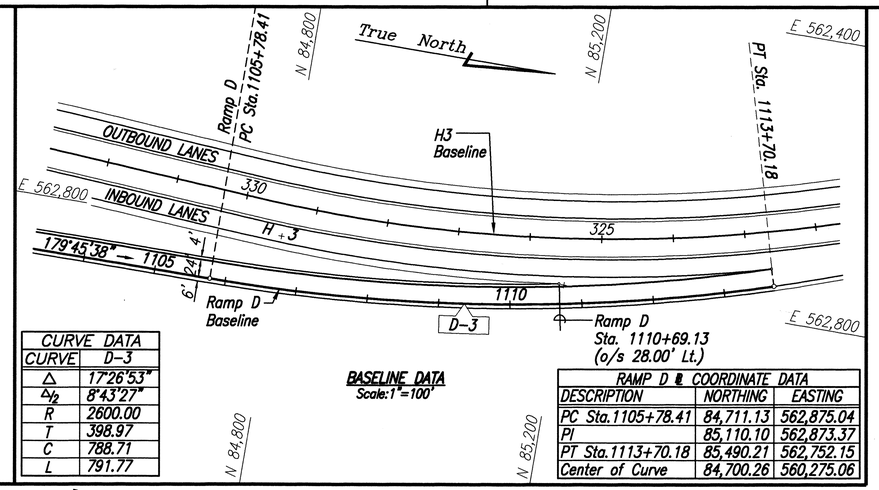

CURVE DATA	
CURVE	D-3
Δ	17°26'53"
Δ/2	8°43'27"
R	2600.00
T	398.97
C	788.71
L	791.77

BASELINE DATA
Scale: 1" = 100'

RAMP D ℄ COORDINATE DATA		
DESCRIPTION	NORTHING	EASTING
PC Sta.1105+78.41	84,711.13	562,875.04
PI	85,110.10	562,873.37
PT Sta.1113+70.18	85,490.21	562,752.15
Center of Curve	84,700.26	560,275.06

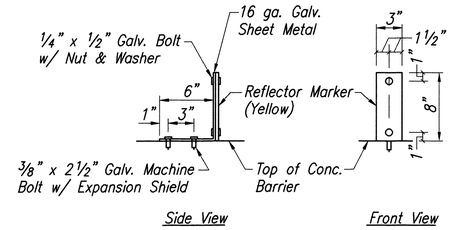

3 5C1 5C1 RM-2 MARKER MOUNTED ON CONCRETE WALL TRANSITION
Not to Scale

NOTES:

1. The location of existing underground facilities are from existing records with varying degrees of accuracy and are not guaranteed as shown. The Contractor shall exercise extreme caution whenever construction crosses or is in close proximity of underground lines.
2. For verification of HECO underground lines or for assistance in supporting and protecting these lines, the Contractor shall call HECO's underground division at 543-7345 a minimum of 72 hour's in advance.
3. Any damage to HECO's facilities will be reported immediately to HECO's trouble dispatcher at 543-7874. The repair work shall be done by HECO, or by the Contractor under HECO's supervision at no additional cost to the State.
4. All existing underground facilities shown on these plans or whose approximate locations within the project boundaries have been made known by any reasonable means at any time to the Contractor, shall be protected at all times by the Contractor during construction. The Contractor shall be responsible for repair of existing facilities damaged as a result of installation work of guardrail and at no cost to the State.
5. Azimuth and coordinates are based on Hawaiian Plane Coordinate Grid System Zone 1, referred to "Kailua" △, 80,135.23 N & 575,640.57E
6. For Metal Guardrail Detail, see Standard Plan TE-50 & 51.
7. For Type "G" Flare and Anchor Block Detail, See Standard Plan TE-59 & TE-60 respectfully. Payment for Flared End Section and Conc. Anchor Block shall be considered incidental to the various contract items.
8. Payment for Breakout of Existing CRM and Grout required for Guardrail Installation shall be considered incidental to the various contract items.

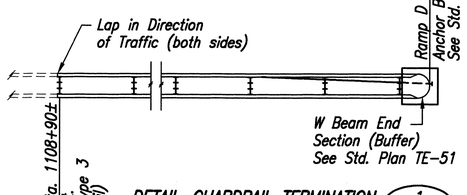

DETAIL-GUARDRAIL TERMINATION 1 5C1 5C1
Not to Scale

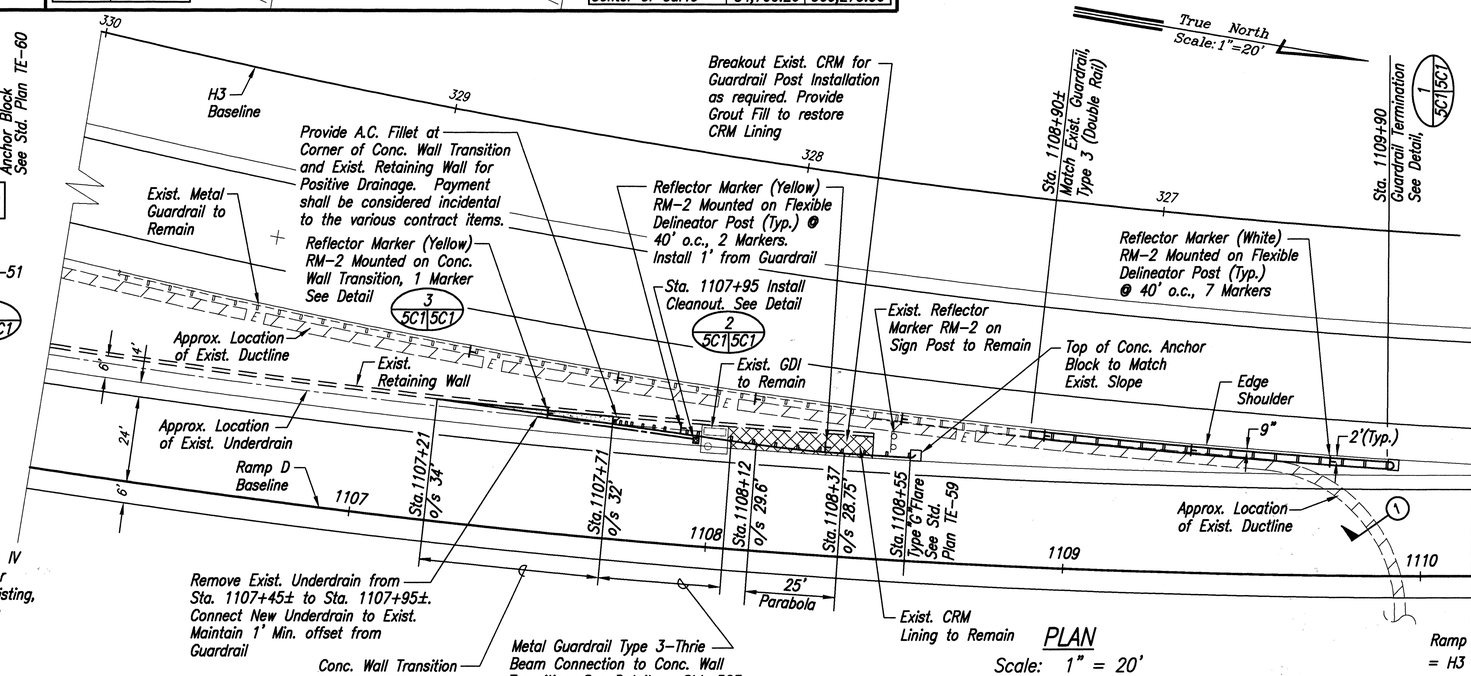

PLAN
Scale: 1" = 20'

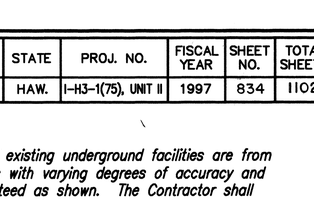

1 EXIST. DUCT SECTION
NTS

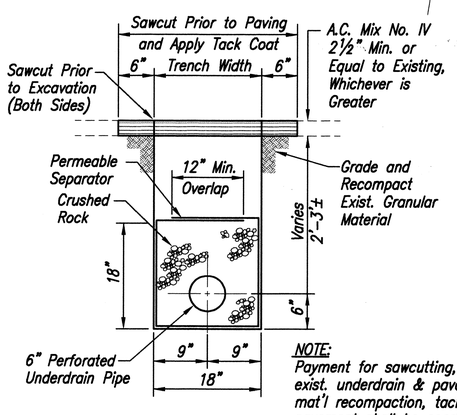

NOTE:
Payment for sawcutting, removal of exist. underdrain & pavement, onsite mat'l recompaction, tack coat, and A.C. pavement shall be considered incidental to the various contract items.

6" PERFORATED UNDERDRAIN PIPE DETAIL
Scale: 1" = 1'-0"

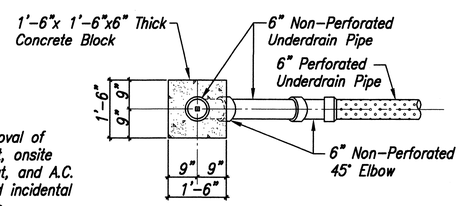

PLAN

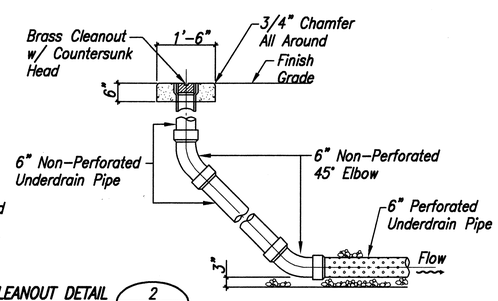

TYPICAL CLEANOUT DETAIL 2 5C1 5C1
NTS

Underdrain Schedule

Cleanout	6" Perforated Underdrain Pipe
Sta. 1107+95	Sta. 1107+45± to Sta. 1107+95 Lt.

Metal Guardrail, Type 3 - Single w/ Steel Posts
Ramp D Sta. 1108+05 to Sta. 1108+55 Lt. (50 Lin. Ft.)

Metal Guardrail, Type 3 - Double w/ Steel Posts
Ramp D Sta. 1108+90± to Sta. 1109+90 Lt. (100 Lin. Ft.)

ROBERT T. WATARI LICENSED PROFESSIONAL ENGINEER No. 4560-C HAWAII, U.S.A.

THIS WORK WAS PREPARED BY ME OR UNDER MY SUPERVISION.
Robert T. Watari

DATE	REVISION

STATE OF HAWAII
DEPARTMENT OF TRANSPORTATION
HIGHWAYS DIVISION
WINDWARD
ROADWAY CONSTRUCTION
KANEOHE INTERCHANGE
H-3 FINISH (UNIT II)
F.A.I. PROJ. NO. I-H3-1(75), UNIT II
LEEWARD SECTION
SCALE: AS NOTED DATE: JAN. 1997

SHEET No.5C1 OF 4 SHEETS

834

ORIGINAL PLAN	SURVEY PLOTTED BY	DATE
	DRAWN BY	
NOTE BOOK	TRACED BY	
	DESIGNED BY	
No.	QUANTITIES BY	
	CHECKED BY	

83-45.6 H3 FINISH UNIT II F:H3-D.DWG D(1) 1=20 01/28/97 jky

FED. ROAD DIST. NO.	STATE	FED. AID PROJ. NO.	FISCAL YEAR	SHEET NO.	TOTAL SHEETS
HAWAII	HAW.	I-H3-1(75) UNIT II	1997	835	1102

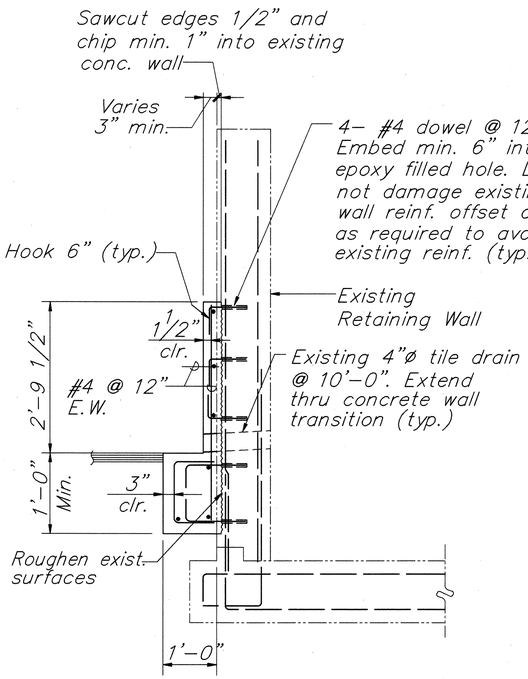

SECTION A
Scale: 3/4" = 1'–0" (5C2 | 5C2)

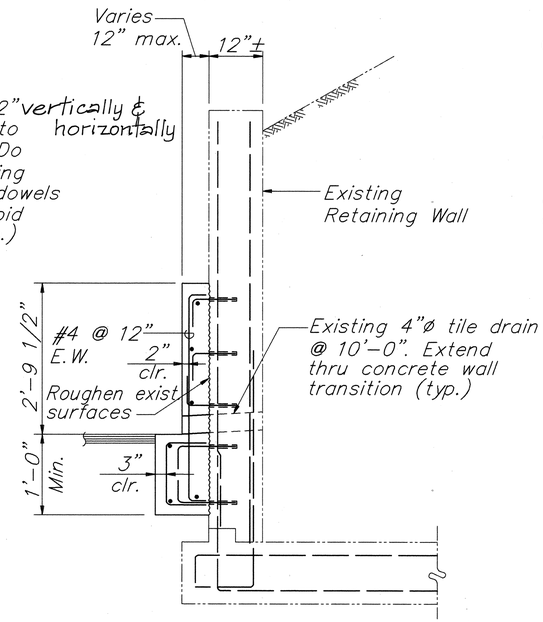

TYPICAL SECTION ≤ 12" WIDE
Scale: 3/4" = 1'–0" (5C2 | 5C2)

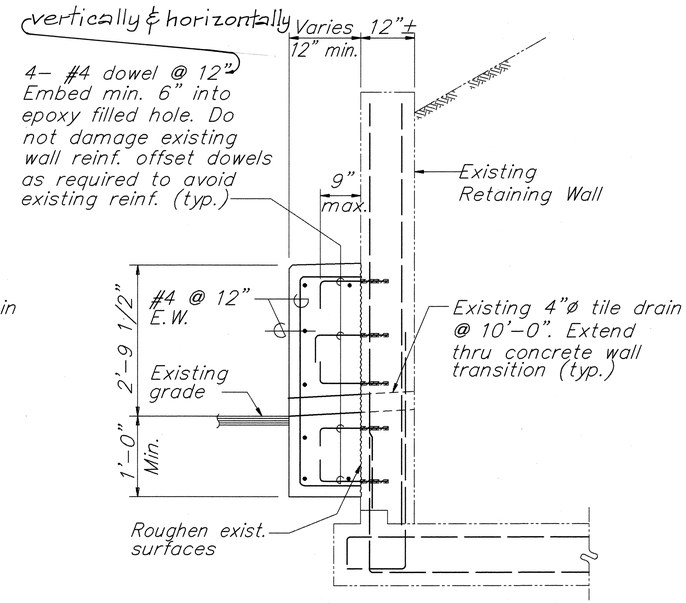

TYPICAL SECTION > 12" WIDE (C | 5C2)
Scale: 3/4" = 1'–0"
5C2, 5C3

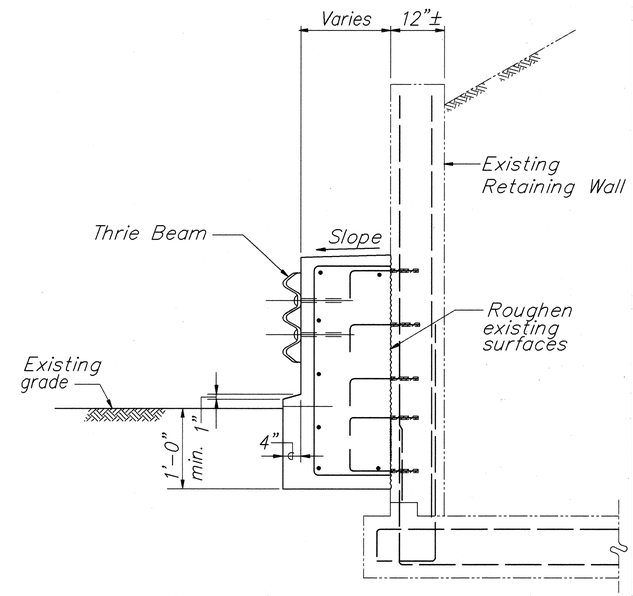

SECTION C
Scale: 3/4" = 1'–0" (5C3 | 5C2)

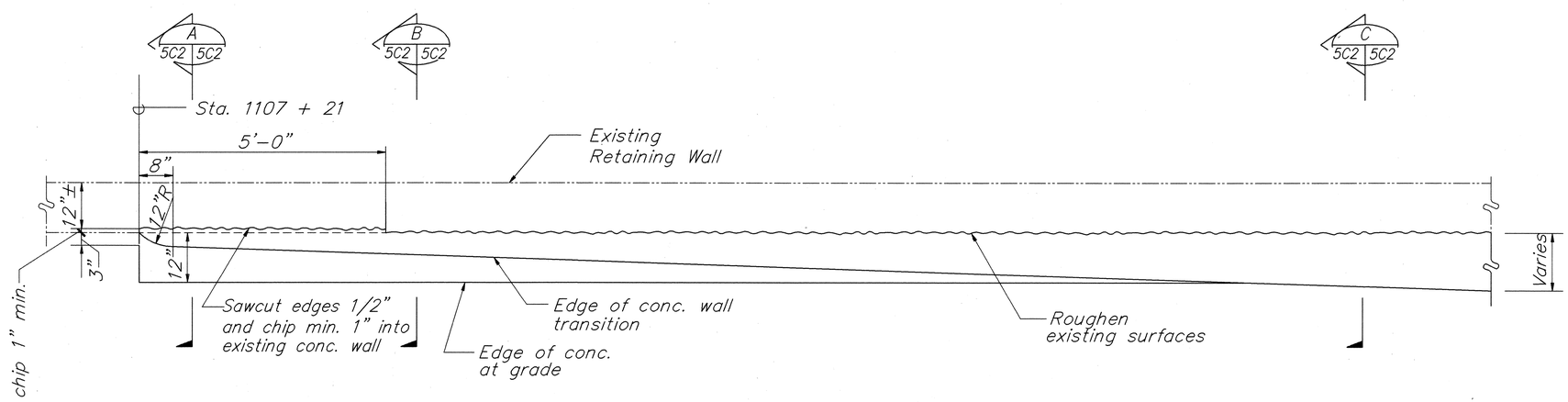

PLAN OF CONCRETE WALL TRANSITION
Scale: 3/4" = 1'–0"

ORIGINAL PLAN	SURVEY PLOTTED BY	DATE
	DRAWN BY	"
	TRACED BY	"
NOTE BOOK	DESIGNED BY	"
	QUANTITIES BY	"
No.	CHECKED BY	"

HAROLD TAKASHI MIYAMOTO
LICENSED PROFESSIONAL ENGINEER
No.1514–S
HAWAII, U.S.A.

THIS WORK WAS PREPARED BY ME OR UNDER MY SUPERVISION

DATE:	REVISION

STATE OF HAWAII
DEPARTMENT OF TRANSPORTATION
HIGHWAYS DIVISION
WINDWARD
CONCRETE WALL TRANSITION
PLAN AND SECTIONS
H–3 FINISH (UNIT II)
F.A.I. PROJ. NO. I-H3-1(75), UNIT II
LEEWARD SECTION
SCALE: AS NOTED DATE: JAN. 1997

SHEET No. 5C2 OF 4 SHEETS

FED. ROAD DIST. NO.	STATE	FED. AID PROJ. NO.	FISCAL YEAR	SHEET NO.	TOTAL SHEETS
HAWAII	HAW.	I-H3-1(75) UNIT II	1997	836	1102

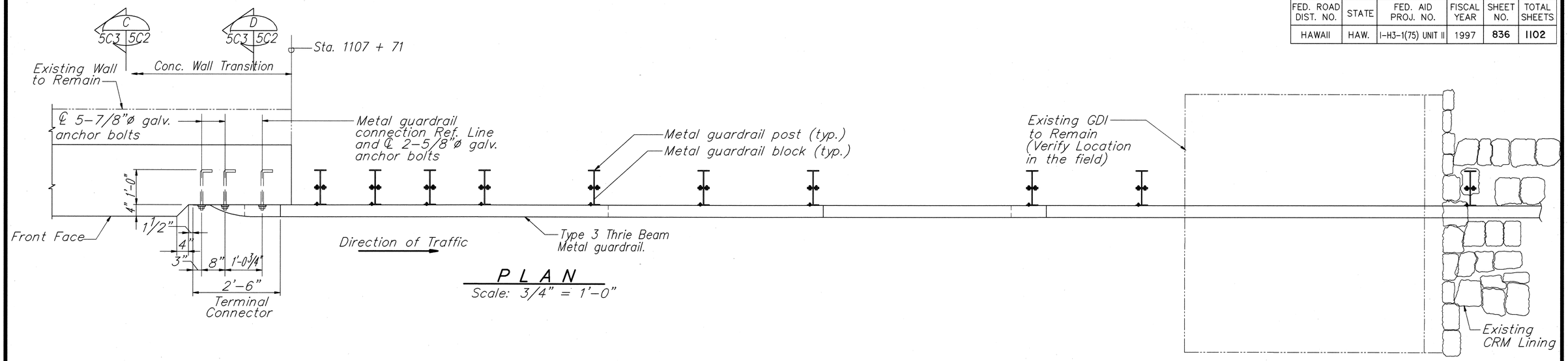

PLAN
Scale: 3/4" = 1'-0"

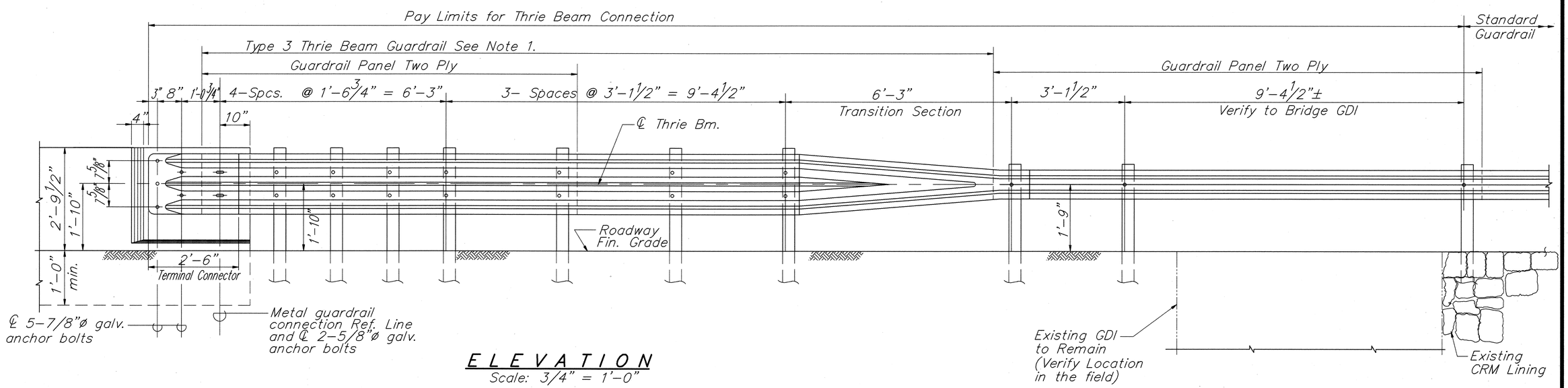

ELEVATION
Scale: 3/4" = 1'-0"

METAL GUARDRAIL CONNECTION TO CONCRETE WALL TRANSITION –DETAIL

Scale: As Noted

NOTE:

1. See Standard Plan TE-57 for Guardrail Type 3 Thrie Beam detail.
2. Concrete strength = 3,000 psi
   Use – 3/8" max. aggregate
3. Reinforcing steel shall be ASTM A615 Grade 40, All bars shall be #4.
4. Anchor bolts shall be ASTM A307 and hot dip galvanized.
5. Chipping, Excavation for footing, dowelling and reinforcing steel are incidental to concrete in transition wall.

ROBERT T. WATARI LICENSED PROFESSIONAL ENGINEER No. 4560-C HAWAII, U.S.A.

THIS WORK WAS PREPARED BY ME OR UNDER MY SUPERVISION.

HAROLD TAKASHI MIYAMOTO LICENSED PROFESSIONAL ENGINEER No.1514-S HAWAII, U.S.A.

THIS WORK WAS PREPARED BY ME OR UNDER MY SUPERVISION

DATE:	REVISION

STATE OF HAWAII
DEPARTMENT OF TRANSPORTATION
HIGHWAYS DIVISION
WINDWARD
METAL GUARDRAIL CONNECTION TO CONCRETE WALL TRANSITION DETAIL
H-3 FINISH (UNIT II)
F.A.I. PROJ. NO. I-H3-1(75) UNIT II
LEEWARD SECTION
SCALE: AS NOTED DATE: JAN. 1997

SHEET No. 5C3 OF 4 SHEETS

ORIGINAL PLAN		
	SURVEY PLOTTED BY	DATE
	DRAWN BY	"
	TRACED BY	"
NOTE BOOK	DESIGNED BY	"
	QUANTITIES BY	"
No.	CHECKED BY	"

FED. ROAD DIST. NO.	STATE	FED. AID PROJ. NO.	FISCAL YEAR	SHEET NO.	TOTAL SHEETS
HAWAII	HAW.	I-H3-1(75), UNIT II	1997	837	1102

NOTES:

1. The existing portable concrete barrier shall remain the property of the State. The Contractor shall deliver these barriers to Kaneohe Baseyard or at a location ordered by the Engineer. This work will be considered incidental to Concrete Rigid Barrier, Modified Type 4G.
2. See Standard Plan TE-63 & TE-65 for General Notes, Expansion Joint Detail, Construction & control Joint Detail, & optional Construction Joint Details.
3. The accepted quantity of Concrete Rigid Barrier Transition Type 4G will be paid under Concrete Rigid Barrier, Type 4G. The accepted quantity of Concrete Rigid Barrier Transition, Modified Type 4G will be paid under Concrete Rigid Barrier, Modified Type 4G.

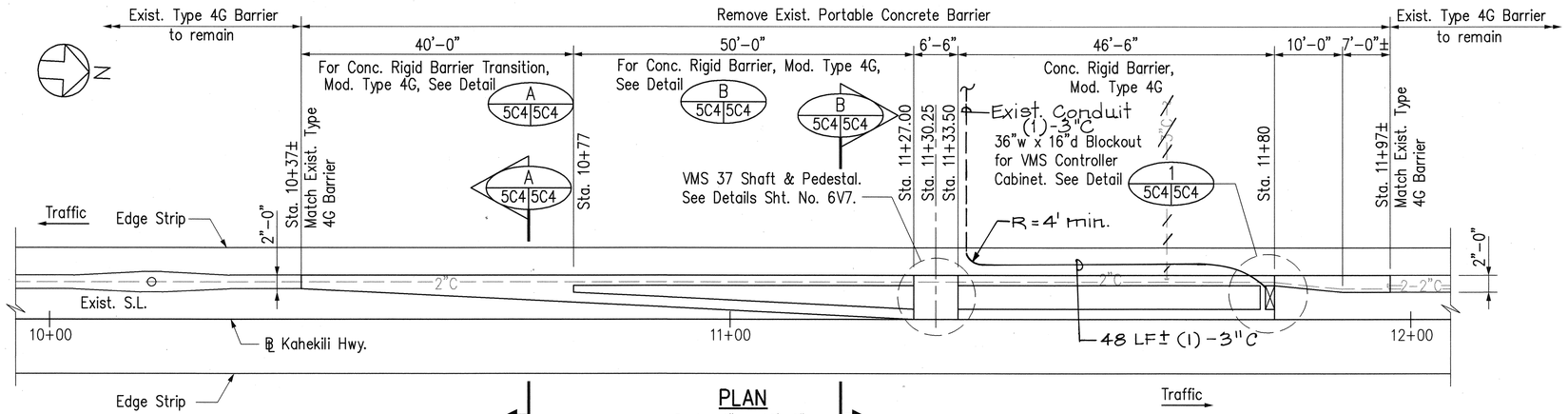

PLAN
Scale: 1" = 10'-0"

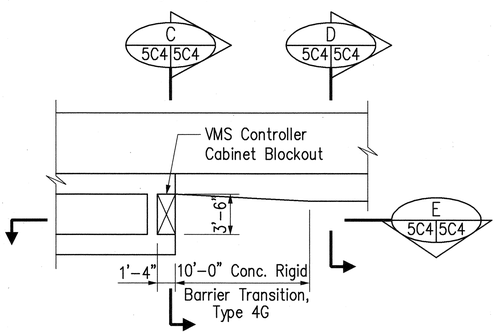

DETAIL 1
Scale: 3/16" = 1'-0"

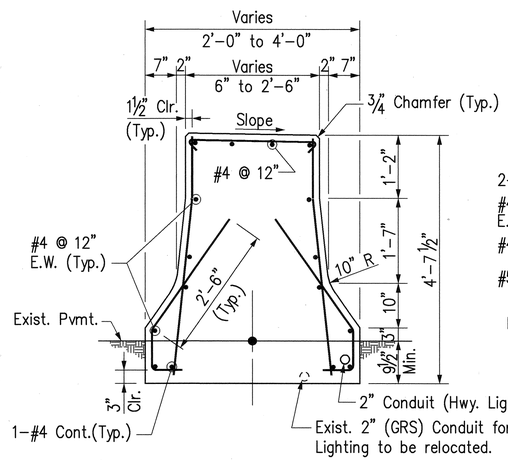

CONCRETE RIGID BARRIER TRANSITION, MODIFIED TYPE 4G

SECTION A
Scale: 3/4" = 1'-0"

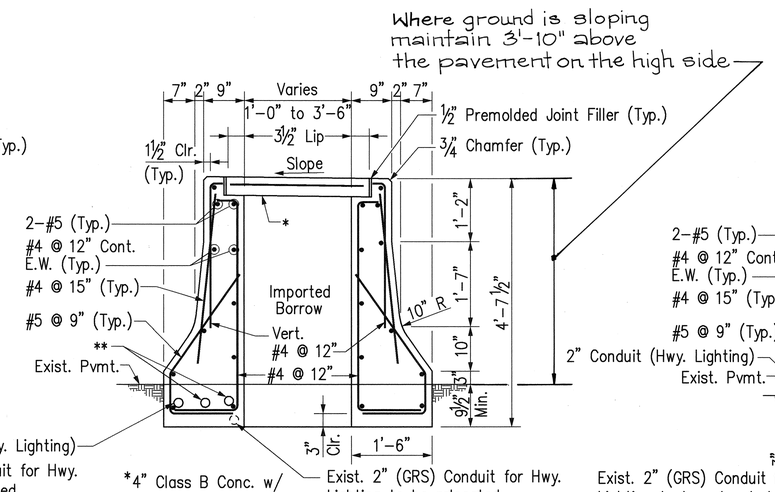

*4" Class B Conc. w/ 6x6, W1.4xW1.4 Welded Wire Fabric Reinf. (WWF & Imported Borrow Incidental to Conc. Rigid Barrier, Modified Type 4G.

CONCRETE RIGID BARRIER, MODIFIED TYPE 4G

SECTION B
Scale: 3/4" = 1'-0"

**For Conduit Size & Locations, See Plan Sht. No. SY60.

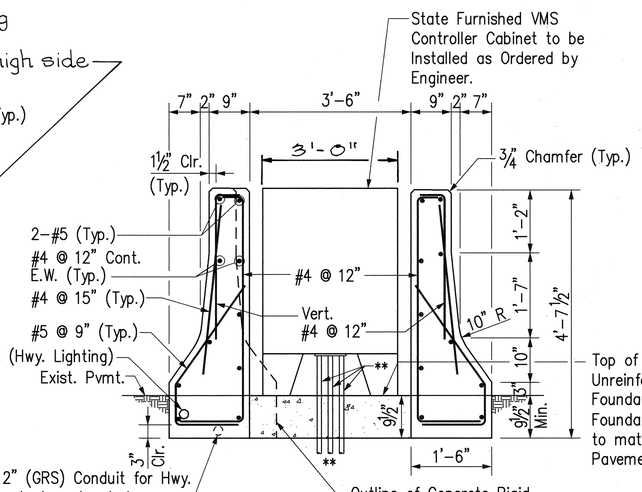

CONCRETE RIGID BARRIER TRANSITION, TYPE 4G

SECTION C
Scale: 3/4" = 1'-0"

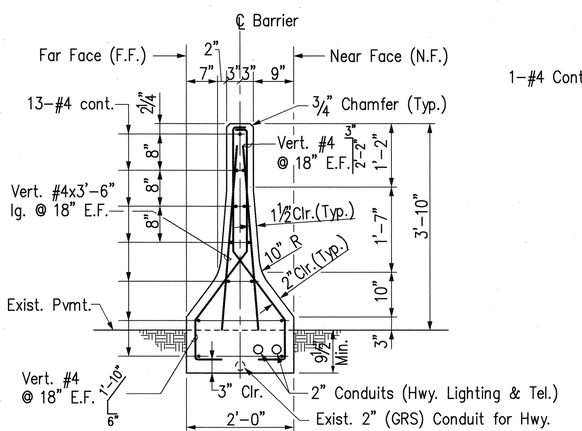

Existing Portable Concrete Barrier not shown for clarity.

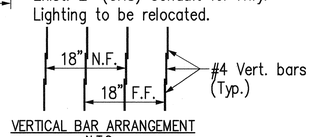

VERTICAL BAR ARRANGEMENT
N.T.S.

CONCRETE RIGID BARRIER, MODIFIED TYPE 4G

SECTION D
Scale: 3/4" = 1'-0"

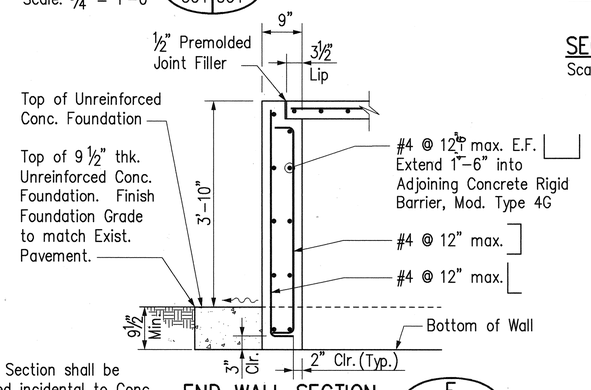

NOTE:
End Wall Section shall be considered incidental to Conc. Rigid Barrier, Mod. Type 4G.

END WALL SECTION E
Scale: 3/4" = 1'-0"

Date	Revision
5/20/98	Added Controller Cabinet Foundation at Sections C & E.

STATE OF HAWAII
DEPARTMENT OF TRANSPORTATION
HIGHWAYS DIVISION

WINDWARD
ROADWAY CONSTRUCTION
VMS @ KAHEKILI HWY.

H-3 FINISH (UNIT II)
FAIP NO. I-H3-1(75), UNIT II
LEEWARD SECTION

SCALE: AS SHOWN DATE: JANUARY 1997

STANLEY T. KATSURA LICENSED PROFESSIONAL ENGINEER No. 7254-C HAWAII, U.S.A.

THIS WORK WAS PREPARED BY ME OR UNDER MY SUPERVISION.

Stanley Katsura

ORIGINAL PLAN | SURVEY PLOTTED BY | DRAWN BY | TRACED BY | DESIGNED BY | QUANTITIES BY | CHECKED BY | DATE | No.

CAD by J. Mimura, 55-52

Last Saved: J:\H3RF\RFU2\CO\WINDWARD\Co-winrc.dwg.dwg 05/19/98 at 15:32

SHEET NO. 5C4 OF 4 SHEETS

C.O. 837

FED. ROAD DIST. NO.	STATE	FED. AID PROJ. NO.	FISCAL YEAR	SHEET NO.	TOTAL SHEETS
HAWAII	HAW.	I-H3-1(75), UNIT II	1997	C.O. 837S-1	1102

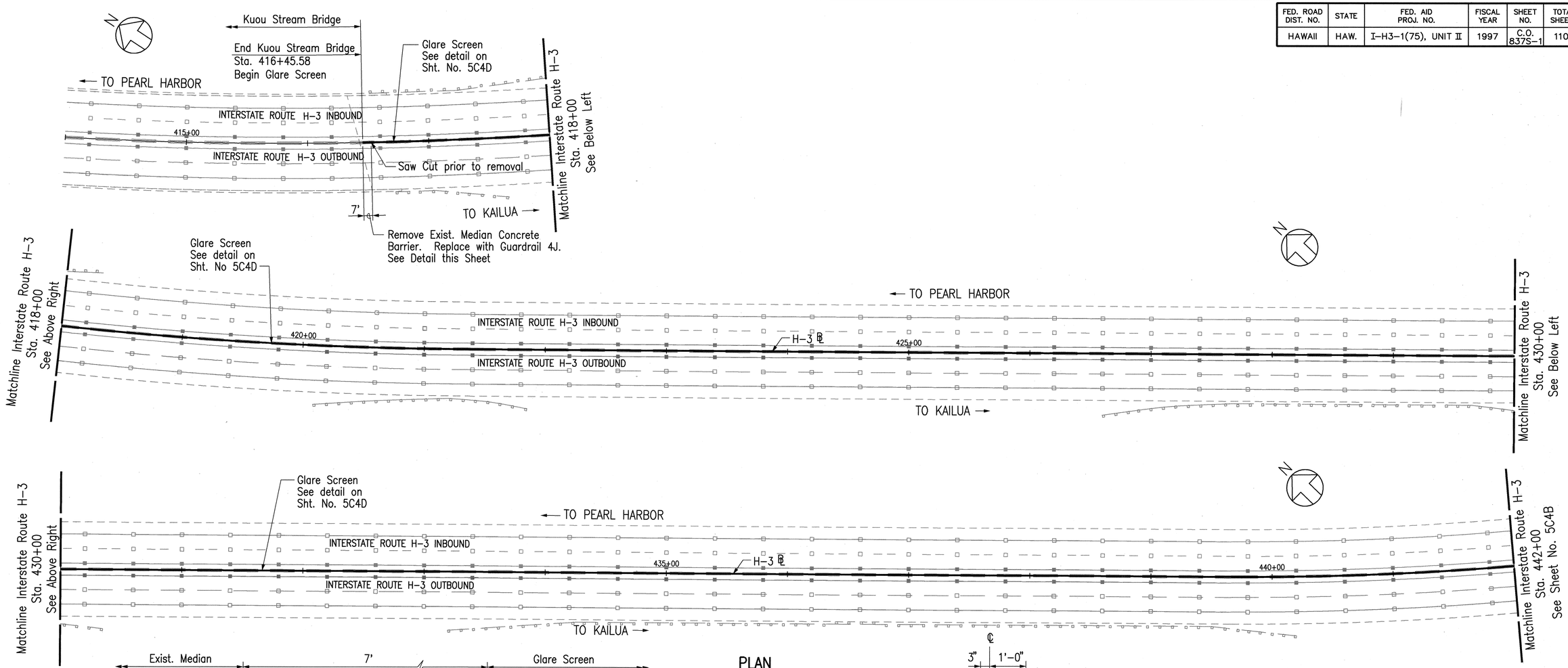

PLAN

Scale: 1" = 40'

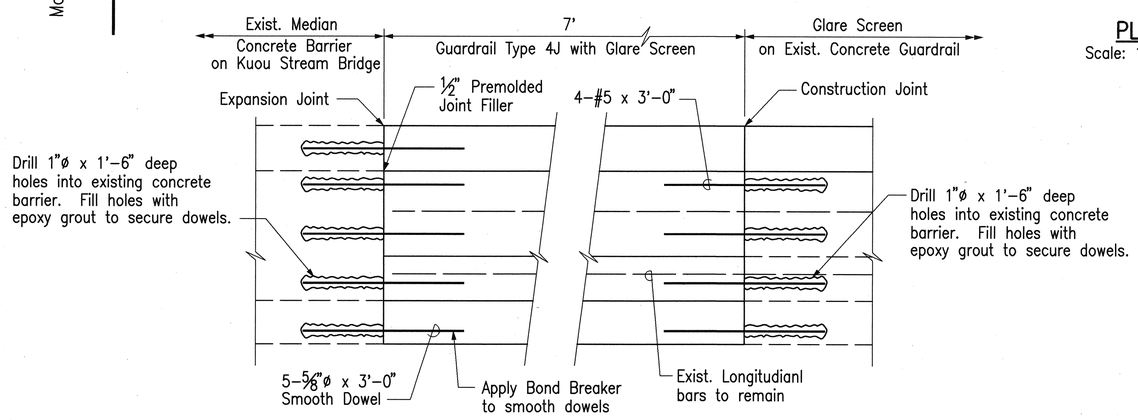

ELEVATION

JOINT DETAILS @ EXISTING CONCRETE GUARDRAIL

Scale: ¾" = 1'-0"

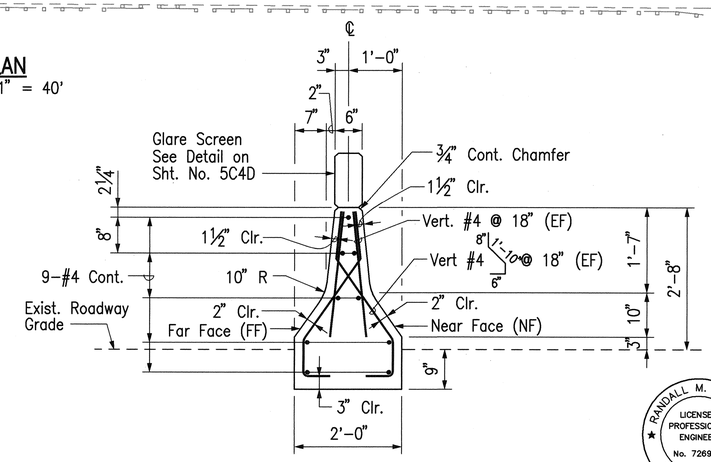

GUARDRAIL TYPE 4J

Scale: ¾" = 1'-0"

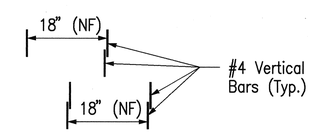

VERTICAL BAR ARRANGEMENT

Not to Scale

Date	Revision
9/12/97	Added Sheet

STATE OF HAWAII
DEPARTMENT OF TRANSPORTATION
HIGHWAYS DIVISION

WINDWARD

ROADWAY CONSTRUCTION

GLARE SCREEN

H-3 FINISH (UNIT II)
FAIP NO. I-H3-1(75), UNIT II
LEEWARD SECTION

SCALE: AS SHOWN DATE: SEPTEMBER 1997

RANDALL M. URASAKI
LICENSED PROFESSIONAL ENGINEER
No. 7269-C
HAWAII, U.S.A.

THIS WORK WAS PREPARED BY ME OR UNDER MY SUPERVISION.

SHEET NO. 5C4A OF 4 SHEETS

C.O. 837S-1

ORIGINAL PLAN | SURVEY PLOTTED BY | DRAWN BY | TRACED BY | DESIGNED BY | QUANTITIES BY | CHECKED BY | DATE
NOTE BOOK No.

CAD by J. Mimura, 55-52

Last Saved: J:\H3RF\RFU2\CO\WINDWARD\CO-RCPL4.dwg 09/19/97 at 14:47

FED. ROAD DIST. NO.	STATE	FED. AID PROJ. NO.	FISCAL YEAR	SHEET NO.	TOTAL SHEETS
HAWAII	HAW.	I-H3-1(75), UNIT II	1997	C.O. 837S-2	1102

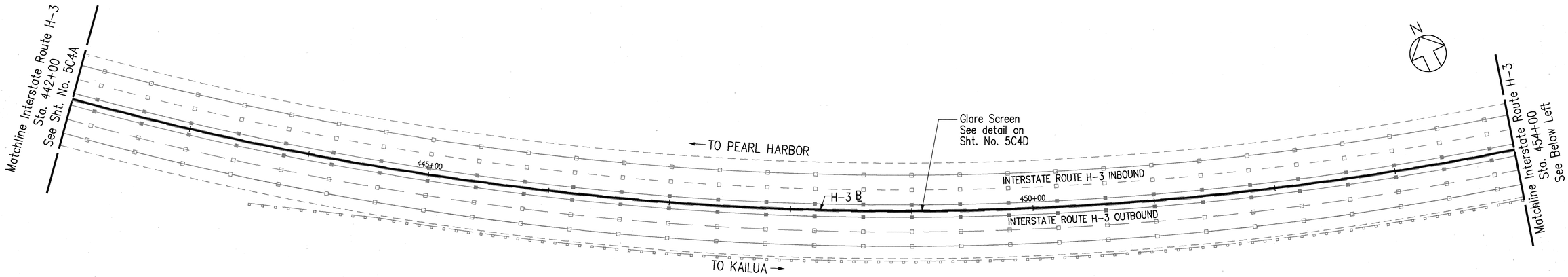

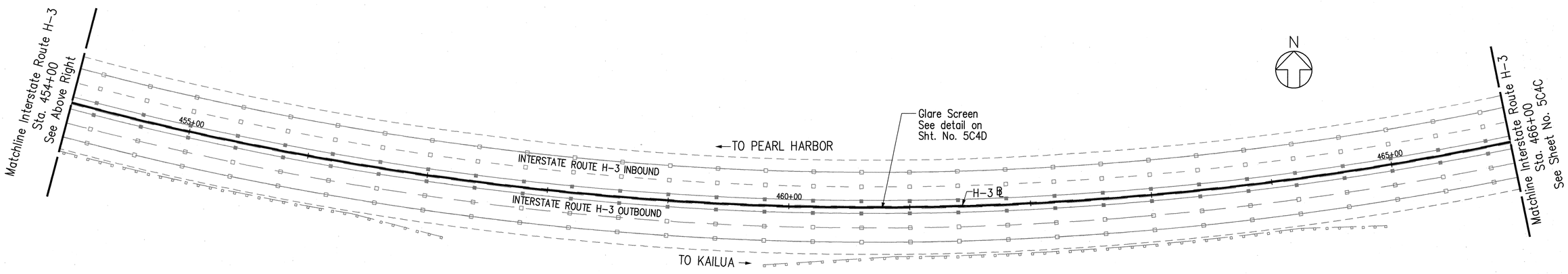

ORIGINAL PLAN	SURVEY PLOTTED BY	DATE
	DRAWN BY	"
NOTE BOOK	TRACED BY	"
	DESIGNED BY	"
	QUANTITIES BY	"
No.	CHECKED BY	"

CAD by J. Mimura, 55-52

Last Saved: J:\H3RF\RFU2\CO\WNDWARD\CO-RCPL3.dwg 09/18/97 at 08:37

Date	Revision
9/12/97	Added Sheet

STATE OF HAWAII
DEPARTMENT OF TRANSPORTATION
HIGHWAYS DIVISION

WINDWARD

ROADWAY CONSTRUCTION

GLARE SCREEN

H-3 FINISH (UNIT II)
FAIP NO. I-H3-1(75), UNIT II
LEEWARD SECTION

SCALE: 1" = 40' DATE: SEPTEMBER 1997

RANDALL M. URASAKI
LICENSED PROFESSIONAL ENGINEER
No. 7269-C
HAWAII, U.S.A.

THIS WORK WAS PREPARED BY ME OR UNDER MY SUPERVISION.

SHEET NO. 5C4B OF 4 SHEETS

C.O. 837S-2

FED. ROAD DIST. NO.	STATE	FED. AID PROJ. NO.	FISCAL YEAR	SHEET NO.	TOTAL SHEETS
HAWAII	HAW.	I-H3-1(75), UNIT II	1997	C.O. 837S-3	1102

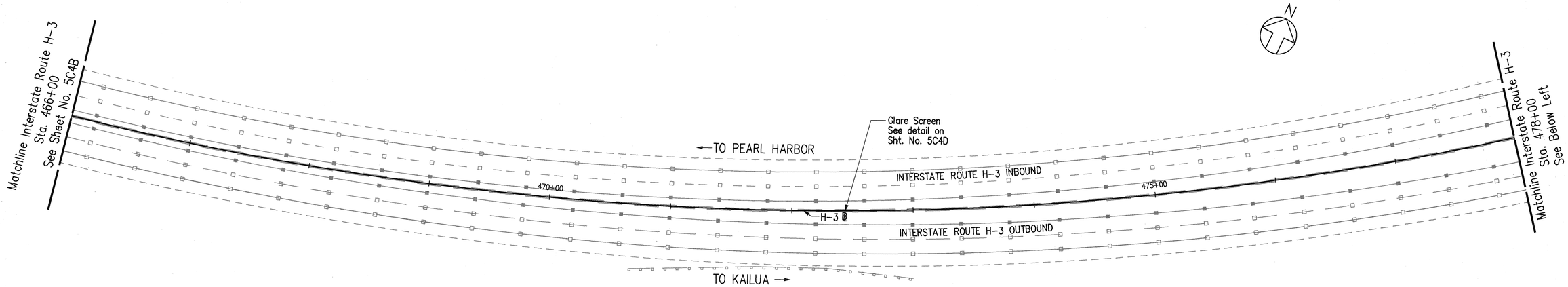

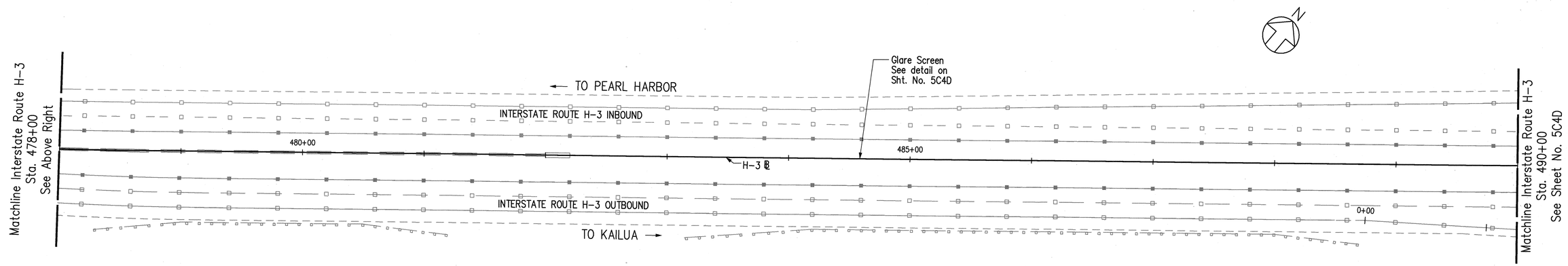

Date	Revision
9/12/97	Added Sheet

STATE OF HAWAII
DEPARTMENT OF TRANSPORTATION
HIGHWAYS DIVISION

WINDWARD
ROADWAY CONSTRUCTION
GLARE SCREEN

H-3 FINISH (UNIT II)
FAIP NO. I-H3-1(75), UNIT II
LEEWARD SECTION

SCALE: 1" = 40' DATE: SEPTEMBER 1997

RANDALL M. URASAKI
LICENSED PROFESSIONAL ENGINEER
No. 7269-C
HAWAII, U.S.A.

THIS WORK WAS PREPARED BY ME OR UNDER MY SUPERVISION.

SHEET NO. 5C4C OF 4 SHEETS

C.O. 837S-3

ORIGINAL PLAN | SURVEY PLOTTED BY ____ DATE ____
DRAWN BY ____
NOTE BOOK | TRACED BY ____
DESIGNED BY ____
QUANTITIES BY ____
No. ____ | CHECKED BY ____

CAD by J. Mimura, 55-52

Last Saved: J:\H3RF\RFU2\CO\WNDWARD\CO-RCPL5.dwg 09/18/97 at 08:36

FED. ROAD DIST. NO.	STATE	FED. AID PROJ. NO.	FISCAL YEAR	SHEET NO.	TOTAL SHEETS
HAWAII	HAW.	I-H3-1(75), UNIT II	1997	C.O. 837S-4	1102

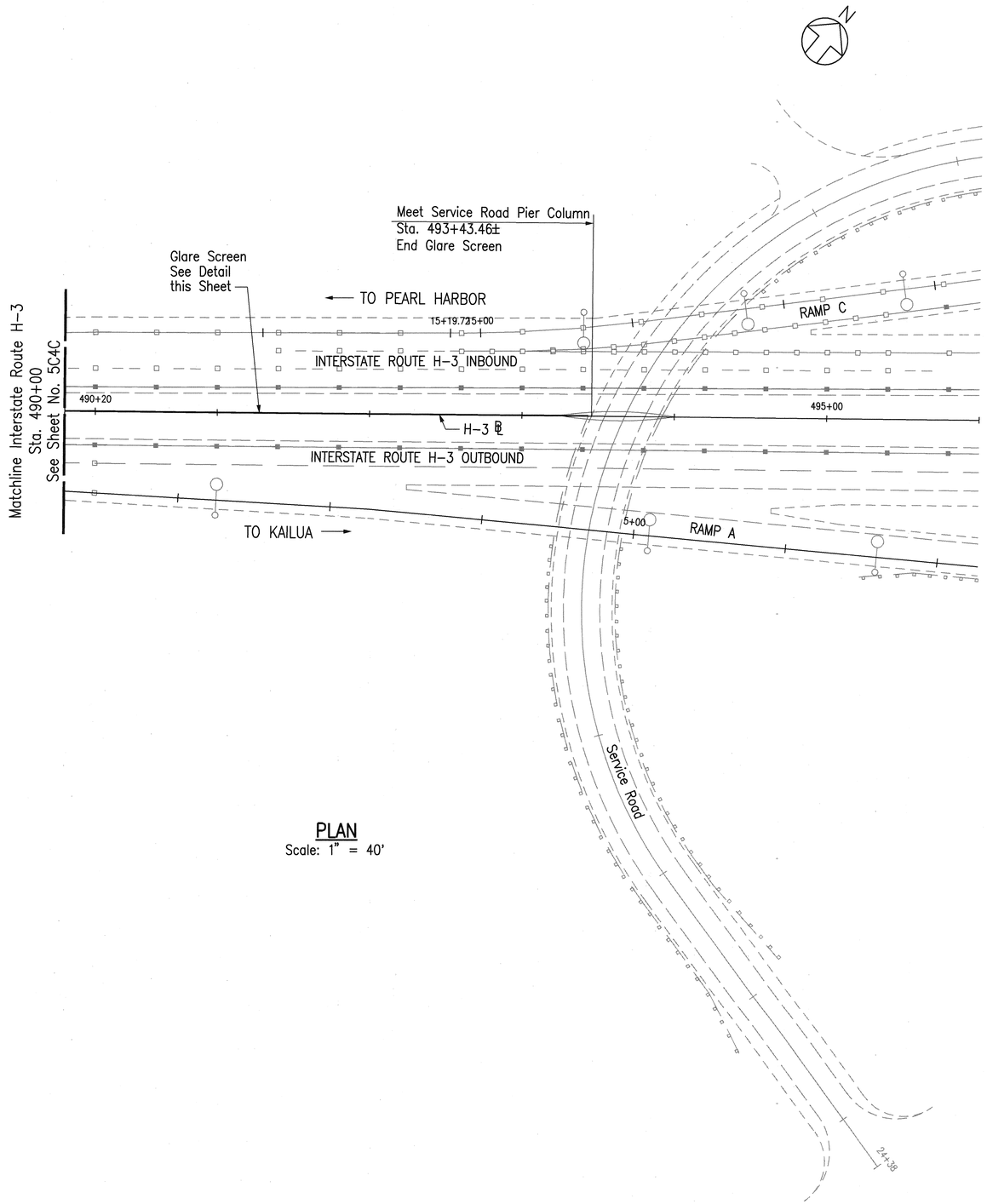

PLAN
Scale: 1" = 40'

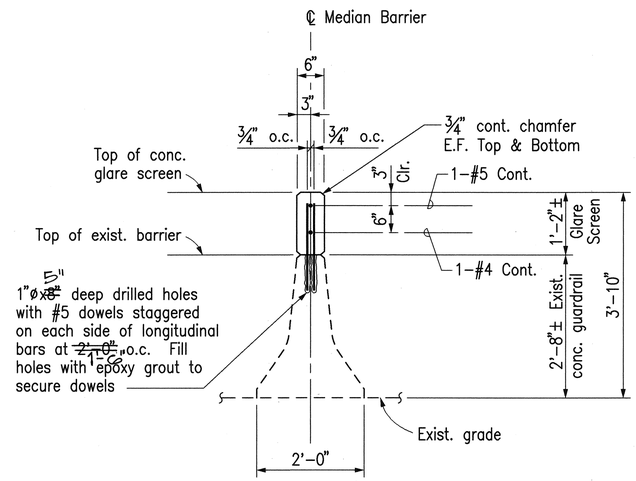

TYPICAL SECTION
Scale: 3/4" = 1'-0"

NOTES:

1. Top of Glare Screen shall be 3'-10" measured from the Pearl Harbor bound roadway.
2. Contractor shall remove exist. grout pad on top of exist. median barrier, prior to construction of Glare Screen. Payment shall be considered incidental to Glare Screen.
3. The Glare Screen shall be centered in the middle of the widened concrete barrier as it approaches the Service Road Pier Column.

CONCRETE GLARE SCREEN ON EXISTING CONCRETE MEDIAN BARRIER

ORIGINAL PLAN		
	SURVEY PLOTTED BY	DATE
	DRAWN BY	"
	TRACED BY	"
NOTE BOOK	DESIGNED BY	"
No.	QUANTITIES BY	"
	CHECKED BY	"

CAD by J. Mimura, 55-52

Last Saved: J:\H3RF\RFU2\CO\WINDWARD\CO-RCPL6.dwg 09/19/97 at 13:47

RANDALL M. URASAKI
LICENSED PROFESSIONAL ENGINEER
No. 7269-C
HAWAII, U.S.A.

THIS WORK WAS PREPARED BY ME OR UNDER MY SUPERVISION.

Date	Revision
9/12/97	Added Sheet

STATE OF HAWAII
DEPARTMENT OF TRANSPORTATION
HIGHWAYS DIVISION

WINDWARD
ROADWAY CONSTRUCTION
GLARE SCREEN

H-3 FINISH (UNIT II)
FAIP NO. I-H3-1(75), UNIT II
LEEWARD SECTION

SCALE: AS SHOWN DATE: SEPTEMBER 1997

SHEET NO. 5C4D OF 4 SHEETS

C.O. 837S-4

FED. ROAD DIST. NO.	STATE	FED. AID PROJ. NO.	FISCAL YEAR	SHEET NO.	TOTAL SHEETS
HAWAII	HAW.	I-H3-1(75), UNIT II	1997	C.O. 837S-5	1102

CURVE	RADIUS	LENGTH	TANGENT	CHORD	DELTA	COORDINATES OF POINT OF INTERSECTION OF TANGENTS
X-1	2200.00'	987.20'	502.05	978.94'	25°42'37"	N 81806.95 E 562563.82

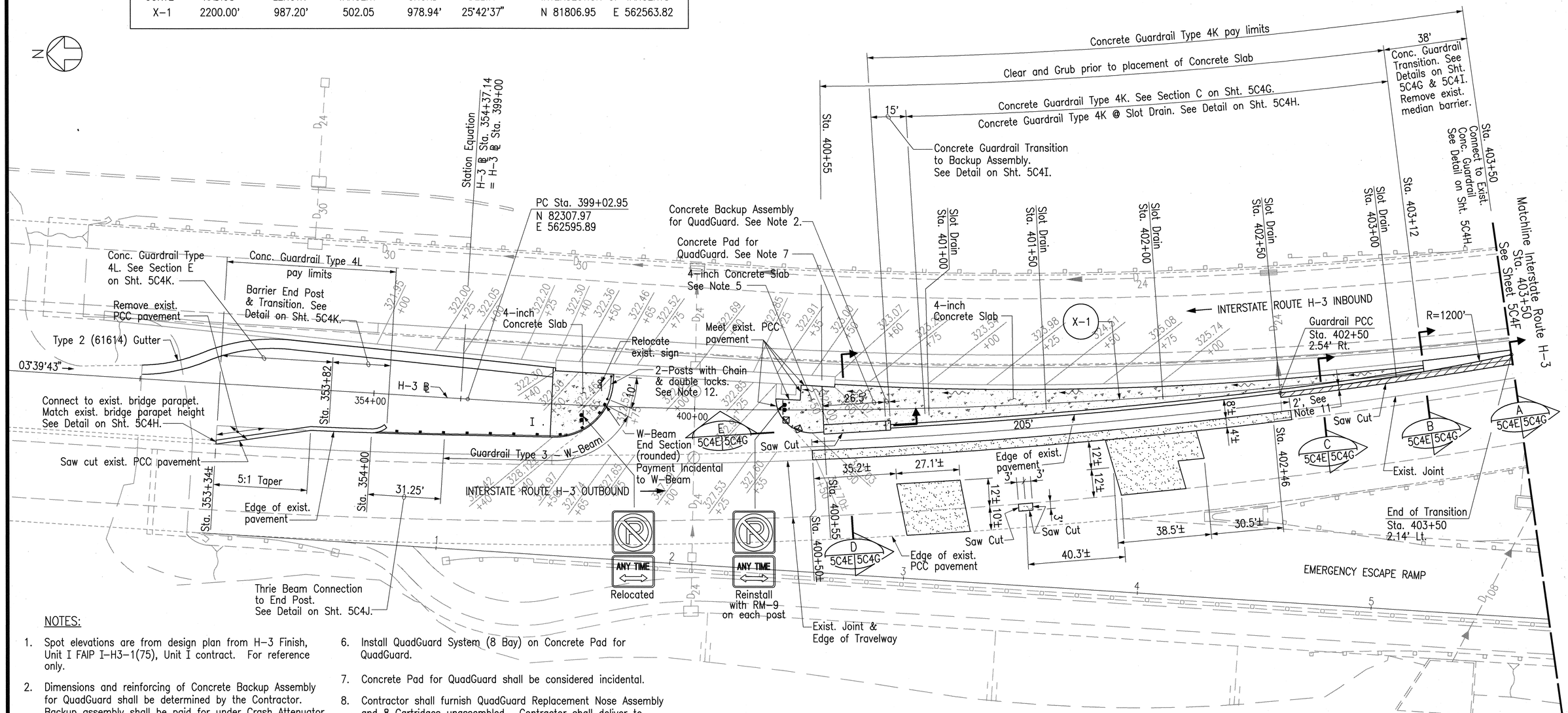

NOTES:

1. Spot elevations are from design plan from H-3 Finish, Unit I FAIP I-H3-1(75), Unit I contract. For reference only.
2. Dimensions and reinforcing of Concrete Backup Assembly for QuadGuard shall be determined by the Contractor. Backup assembly shall be paid for under Crash Attenuator (8 Bay QuadGuard System, including Replacement Nose Assembly and 8 Cartridges).
3. Saw cut and remove existing pavement along existing joints, or saw cut where noted, for 9" Concrete Pavement Reconstruction. Match existing transverse and longitudinal joints.
4. For joint details for pavement reconstruction, see Interior Slab Reconstruction (Excluding H-1 Sta. 144+80 to 149+65 and H-1 Sta. 162+50 to 169+50). See Joint Details on Shts. 1C20 & 1C21.
5. Warp 4" Plain Concrete to meet concrete pad. Payment shall be made under 4-inch Concrete Slab (Including Excavation and Bed Course Material).
6. Install QuadGuard System (8 Bay) on Concrete Pad for QuadGuard.
7. Concrete Pad for QuadGuard shall be considered incidental.
8. Contractor shall furnish QuadGuard Replacement Nose Assembly and 8 Cartridges unassembled. Contractor shall deliver to location specified by Engineer.
9. Coordinates are based on "Kailua Trig. Station".
10. Striping Quantities:

4-inch Pavement Striping (Type II Tape or Thermoplastic Extrusion)	265 Lin. Ft.
Type A Pavement Marker	8 Each
Type C Pavement Marker	4 Each
Type H Pavement Marker	6 Each

11. From existing edge of pavement, remove 2 feet of existing pavement between Sta. 402+50 to Sta. 403+50.
12. Keys for double locks shall be given to the Engineer.

LEGEND

- 9" Concrete Pavement
  18" Untreated Permeable Base Course
- 9" Concrete Pavement Reconstruction
- Reflector Marker, RM-9
  See Standard Plan TE-16
  for mounting detail
- Direction of Flow
  Slope to drain

ORIGINAL PLAN	SURVEY PLOTTED BY	DATE
	DRAWN BY	
NOTE BOOK	TRACED BY	
	DESIGNED BY	
	QUANTITIES BY	
No.	CHECKED BY	

CAD by J. Mimura, 55-52

Last Saved: J:\H3RF\RFU2\CO\WINDWARD\CO-RCPL1.dwg 01/26/98 at 14:08

RANDALL M. URASAKI
LICENSED PROFESSIONAL ENGINEER
No. 7269-C
HAWAII, U.S.A.

THIS WORK WAS PREPARED BY ME OR UNDER MY SUPERVISION.

Date	Revision
10/14/97	Added Sheet

STATE OF HAWAII
DEPARTMENT OF TRANSPORTATION
HIGHWAYS DIVISION

WINDWARD
ROADWAY CONSTRUCTION
WINDWARD HIGHWAY

H-3 FINISH (UNIT II)
FAIP NO. I-H3-1(75), UNIT II
LEEWARD SECTION

SCALE: 1" = 20' DATE: OCTOBER 1997

SHEET NO. 5C4E OF 4 SHEETS

C.O. 837S-5

FED. ROAD DIST. NO.	STATE	FED. AID PROJ. NO.	FISCAL YEAR	SHEET NO.	TOTAL SHEETS
HAWAII	HAW.	I-H3-1(75), UNIT II	1997	C.O. 837S-6	1102

CURVE	RADIUS	LENGTH	TANGENT	CHORD	DELTA	COORDINATES OF POINT OF INTERSECTION OF TANGENTS	
X-1	2200.00'	987.20'	502.05'	978.94'	25°42'37"	N 81806.95	E 562563.82
X-2	3300.00'	1247.88'	631.48'	1240.49'	21°39'58.10"	N 80756.31	E 562989.34

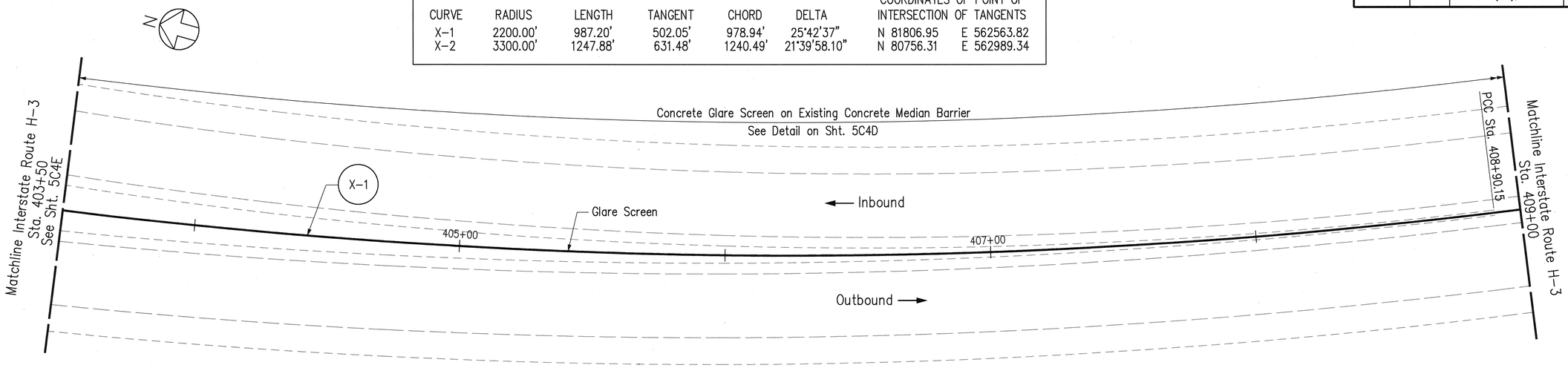

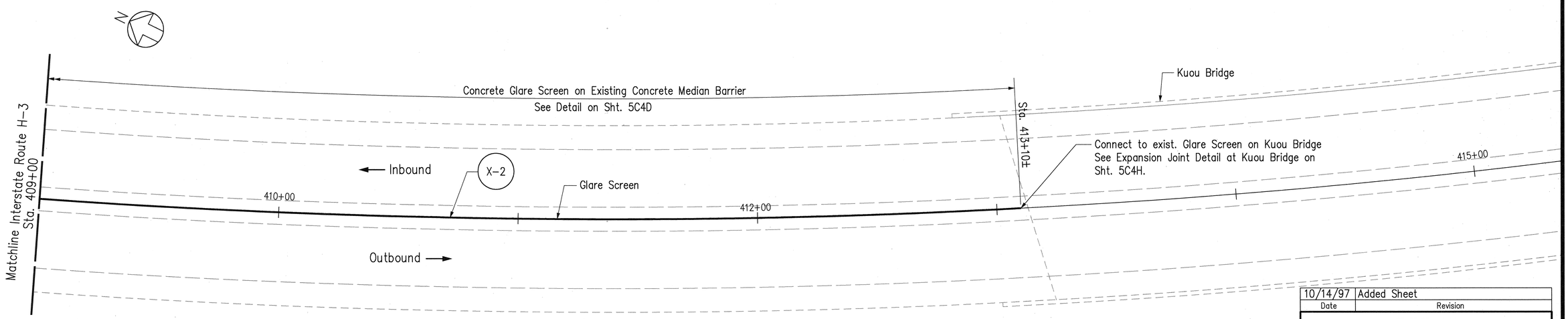

ORIGINAL PLAN	SURVEY PLOTTED BY	DATE
	DRAWN BY	
	TRACED BY	
NOTE BOOK	DESIGNED BY	
	QUANTITIES BY	
No.	CHECKED BY	

CAD by D. Burgess, 55-52

Last Saved: J:\H3RF\RFU2\CO\WINDWARD\CO-RCPL2.dwg 10/15/97 at 12:45

Date	Revision
10/14/97	Added Sheet

RANDALL M. URASAKI
LICENSED PROFESSIONAL ENGINEER
No. 7269-C
HAWAII, U.S.A.

THIS WORK WAS PREPARED BY ME OR UNDER MY SUPERVISION.

STATE OF HAWAII
DEPARTMENT OF TRANSPORTATION
HIGHWAYS DIVISION

WINDWARD
ROADWAY CONSTRUCTION
WINDWARD HIGHWAY

H-3 FINISH (UNIT II)
FAIP NO. I-H3-1(75), UNIT II
LEEWARD SECTION

SCALE: 1" = 20' DATE: OCTOBER 1997

SHEET NO. 5C4F OF 4 SHEETS

C.O. 837S-6

FED. ROAD DIST. NO.	STATE	FED. AID PROJ. NO.	FISCAL YEAR	SHEET NO.	TOTAL SHEETS
HAWAII	HAW.	I-H3-1(75), UNIT II	1997	C.O. 837S-7	1102

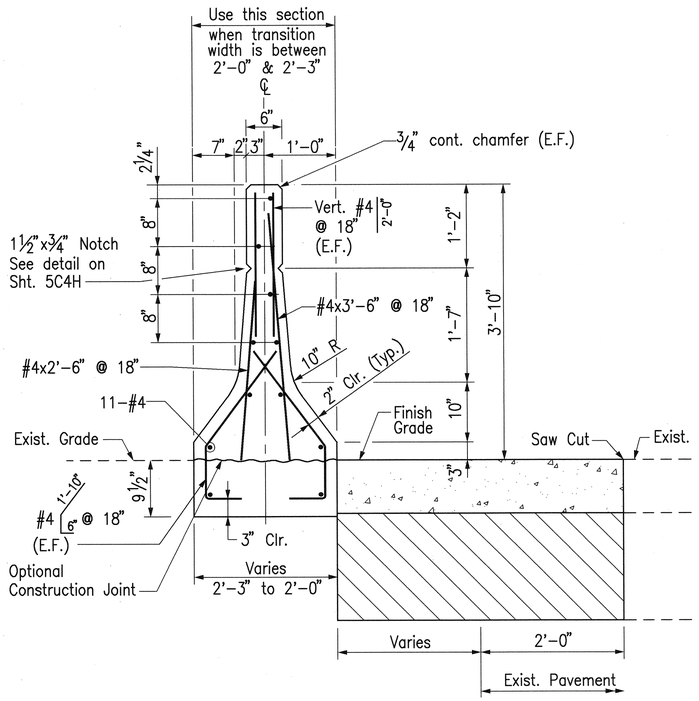

SECTION A
Scale: 1" = 1'-0"
5C4E | 5C4G

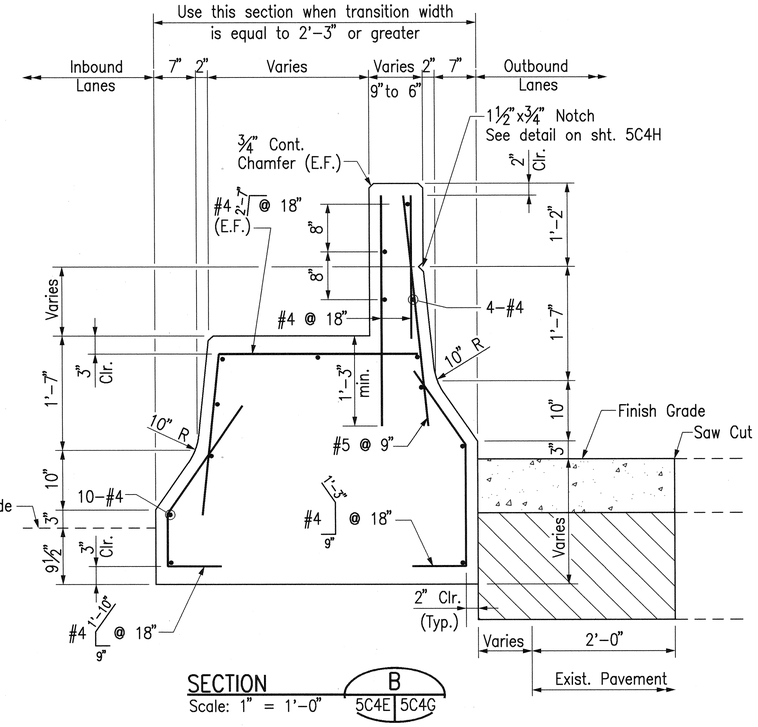

SECTION B
Scale: 1" = 1'-0"
5C4E | 5C4G

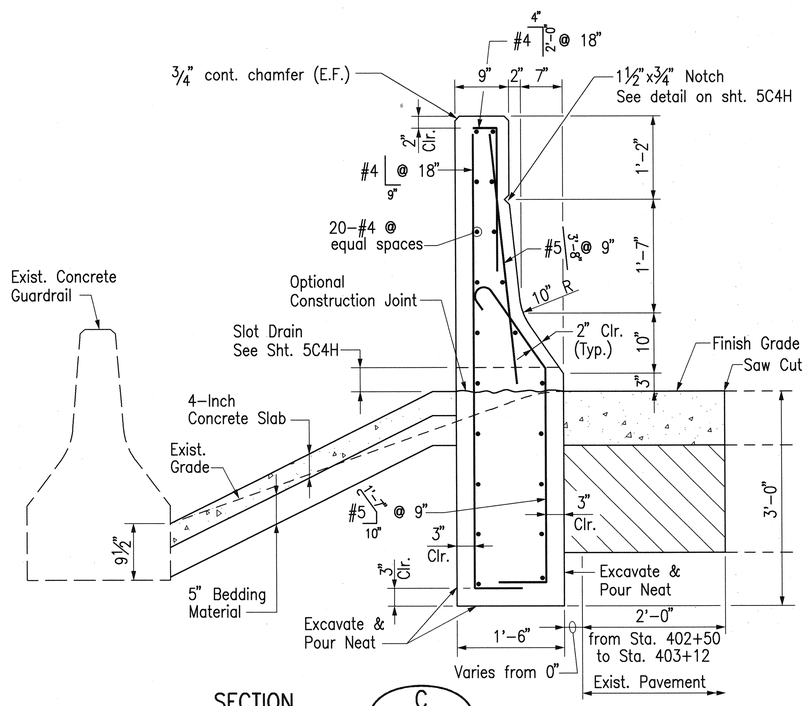

SECTION C
Scale: 1" = 1'-0"
5C4E | 5C4G

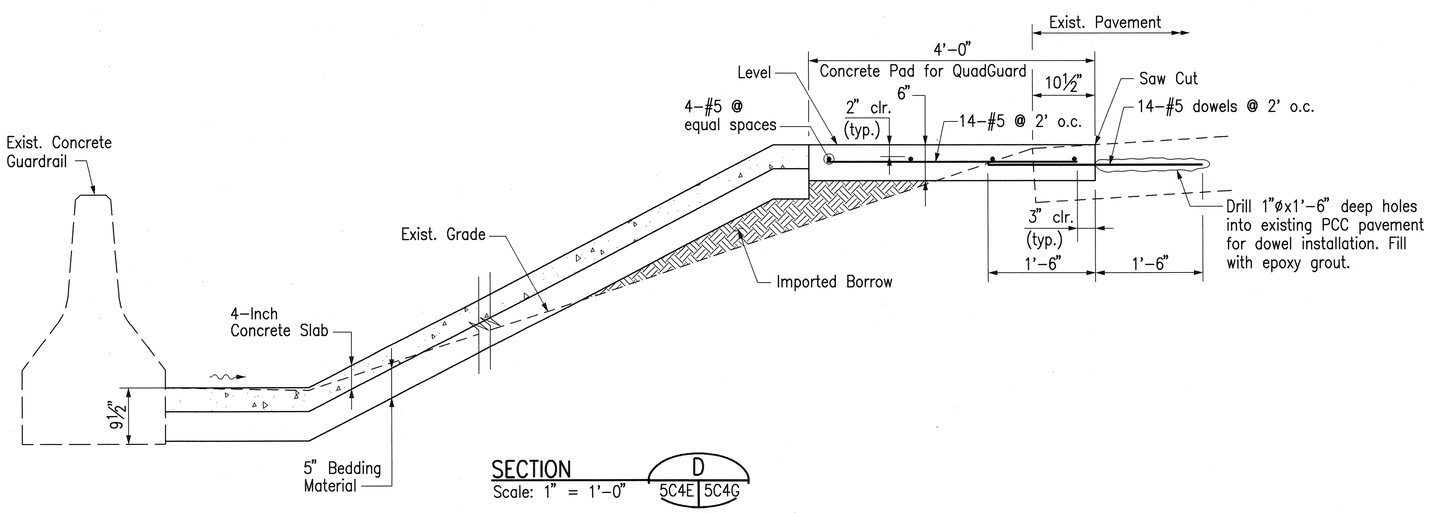

SECTION D
Scale: 1" = 1'-0"
5C4E | 5C4G

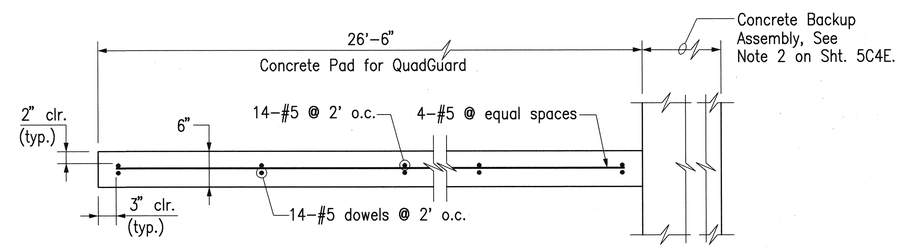

SECTION E
Scale: 1" = 1'-0"
5C4E | 5C4G

Date	Revision
10/14/97	Added Sheet

STATE OF HAWAII
DEPARTMENT OF TRANSPORTATION
HIGHWAYS DIVISION

WINDWARD
ROADWAY CONSTRUCTION
DETAILS

H-3 FINISH (UNIT II)
FAIP NO. I-H3-1(75), UNIT II
LEEWARD SECTION

SCALE: AS SHOWN DATE: OCTOBER 1997

HUI PANG CHEN
LICENSED PROFESSIONAL ENGINEER
No. 3865-S
HAWAII, U.S.A.

THIS WORK WAS PREPARED BY ME OR UNDER MY SUPERVISION.

RANDALL M. URASAKI
LICENSED PROFESSIONAL ENGINEER
No. 7269-C
HAWAII, U.S.A.

THIS WORK WAS PREPARED BY ME OR UNDER MY SUPERVISION.

ORIGINAL PLAN | SURVEY PLOTTED BY | DRAWN BY | TRACED BY | DESIGNED BY | QUANTITIES BY | CHECKED BY | DATE
NOTE BOOK | No.

CAD by J. Mimura, 55-52

Last Saved: J:\H3RF\RFU2\CO\WNDWARD\CO-RCD1.dwg 01/22/98 at 11:47

SHEET NO. 5C4G OF 4 SHEETS

C.O. 837S-7

FED. ROAD DIST. NO.	STATE	FED. AID PROJ. NO.	FISCAL YEAR	SHEET NO.	TOTAL SHEETS
HAWAII	HAW.	I-H3-1(75), UNIT II	1997	C.O. 837S-8	1102

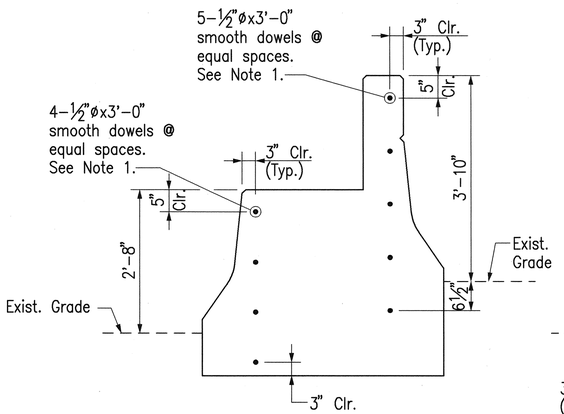

TYPICAL SECTION
H-3 ℄ Sta. 403+12

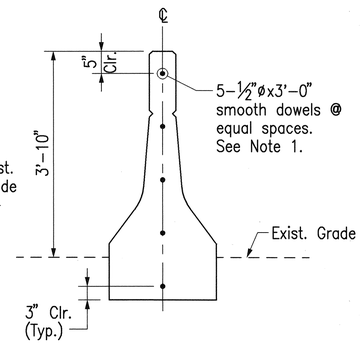

TYPICAL SECTION
H-3 ℄ Sta. 403+50

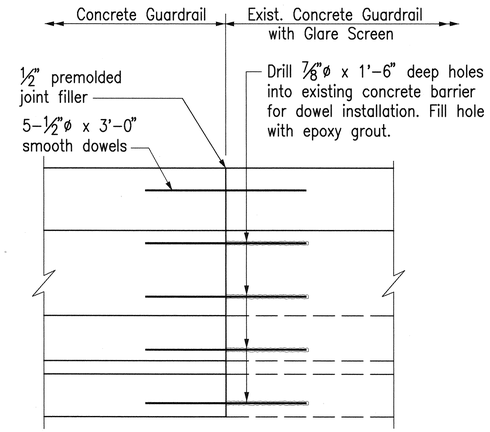

ELEVATION

EXPANSION JOINT DETAIL @ EXISTING CONCRETE GUARDRAIL

Scale: 3/4" = 1'-0"

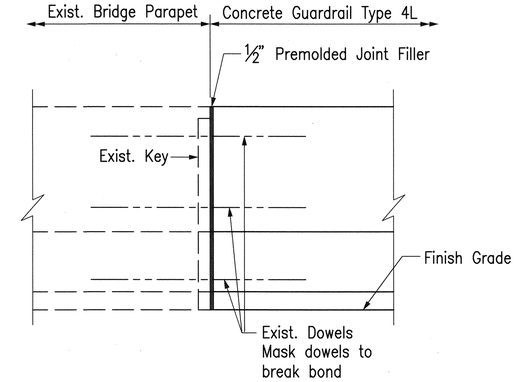

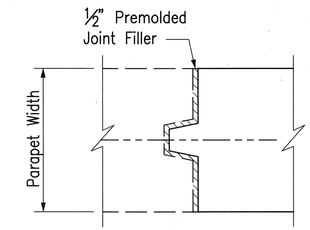

PLAN
KEY DETAIL

EXPANSION JOINT @ EXISTING BRIDGE PARAPET

Not to Scale

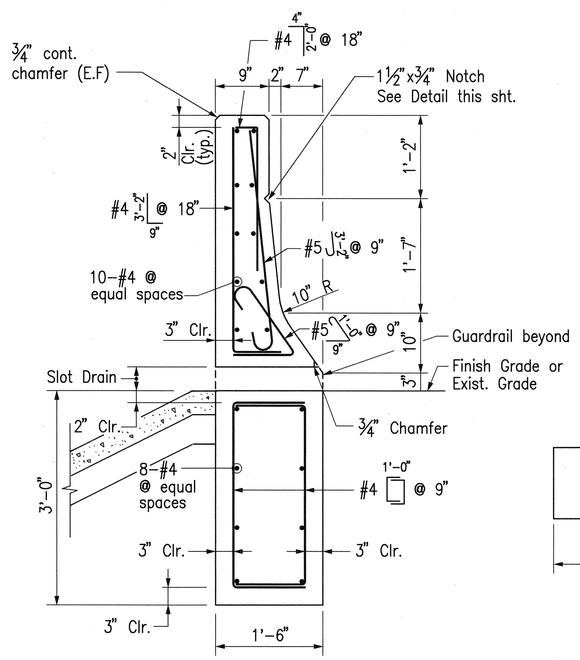

SECTION
Scale: 1" = 1'-0"

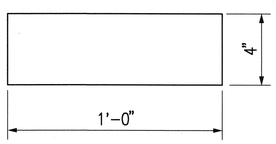

SLOT DRAIN
Scale: 3" = 1'-0"

CONCRETE GUARDRAIL TYPE 4K @ SLOT DRAIN

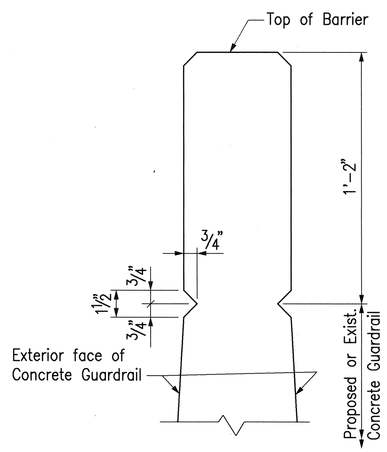

NOTCH DETAIL
Scale: 3" = 1'-0"

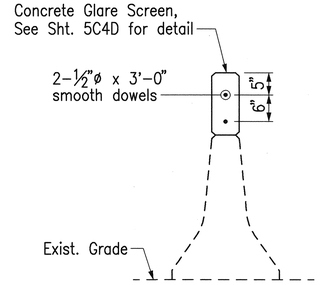

TYPICAL SECTION

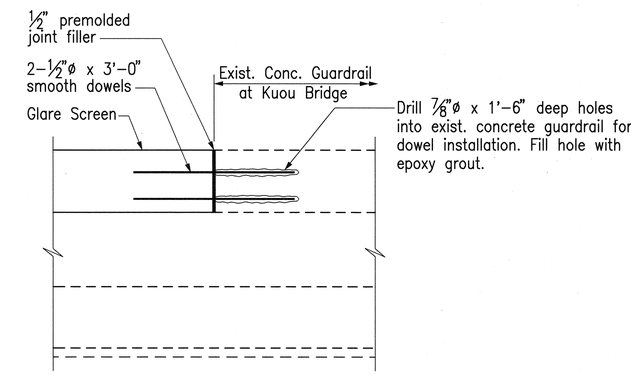

ELEVATION

EXPANSION JOINT DETAIL FOR CONCRETE GLARE SCREEN AT KUOU BRIDGE

Scale: 3/4" = 1'-0"

ORIGINAL PLAN	SURVEY PLOTTED BY	DATE
	DRAWN BY	
NOTE BOOK	TRACED BY	
	DESIGNED BY	
	QUANTITIES BY	
No.	CHECKED BY	

CAD by J. Mimura, 55-52

HUI PANG CHEN
LICENSED PROFESSIONAL ENGINEER
No. 3865-S
HAWAII, U.S.A.

THIS WORK WAS PREPARED BY ME OR UNDER MY SUPERVISION.

Hui Pang Chen

RANDALL M. URASAKI
LICENSED PROFESSIONAL ENGINEER
No. 7269-C
HAWAII, U.S.A.

THIS WORK WAS PREPARED BY ME OR UNDER MY SUPERVISION.

Randall M. Urasaki

Date	Revision
10/14/97	Added Sheet

STATE OF HAWAII
DEPARTMENT OF TRANSPORTATION
HIGHWAYS DIVISION

WINDWARD ROADWAY CONSTRUCTION DETAILS

H-3 FINISH (UNIT II)
FAIP NO. I-H3-1(75), UNIT II
LEEWARD SECTION

SCALE: AS SHOWN DATE: OCTOBER 1997

SHEET NO. 5C4H OF 4 SHEETS

C.O. 837S-8

Last Saved: J:\H3RF\RFU2\CO\WINDWARD\CO-RCD2.dwg 01/26/98 at 14:10

FED. ROAD DIST. NO.	STATE	FED. AID PROJ. NO.	FISCAL YEAR	SHEET NO.	TOTAL SHEETS
HAWAII	HAW.	I-H3-1(75), UNIT II	1997	C.O. 837S-9	1102

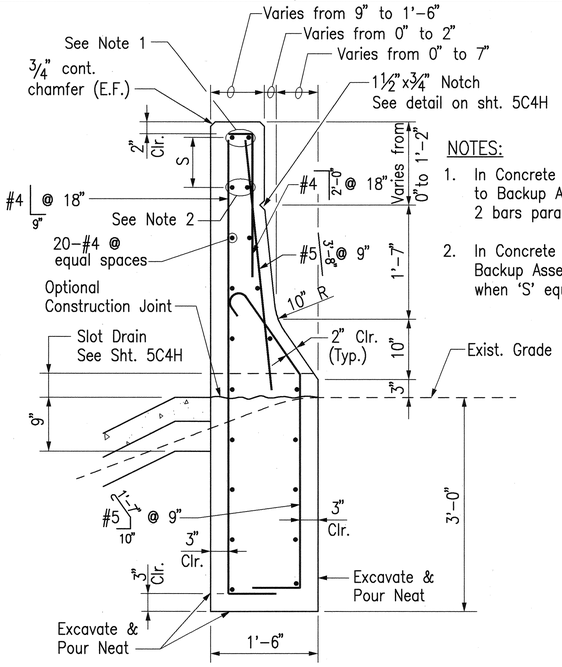

NOTES:

1. In Concrete Guardrail Transition to Backup Assembly run these 2 bars parallel to top of barrier.
2. In Concrete Guardrail Transition to Backup Assembly cut-off these 2 bars when 'S' equals 4".

SECTION 'C'
Scale: 1" = 1'-0"

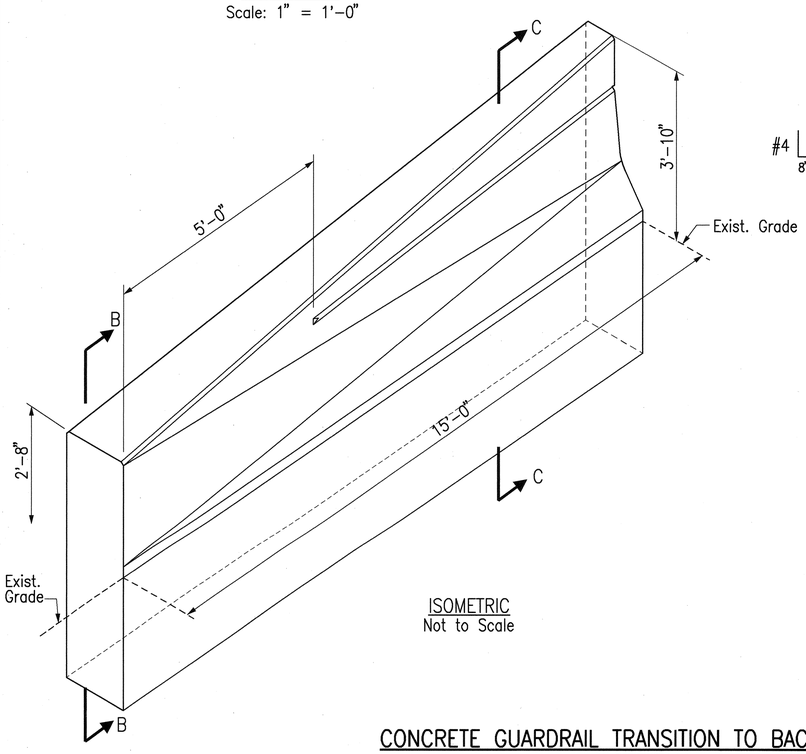

ISOMETRIC
Not to Scale

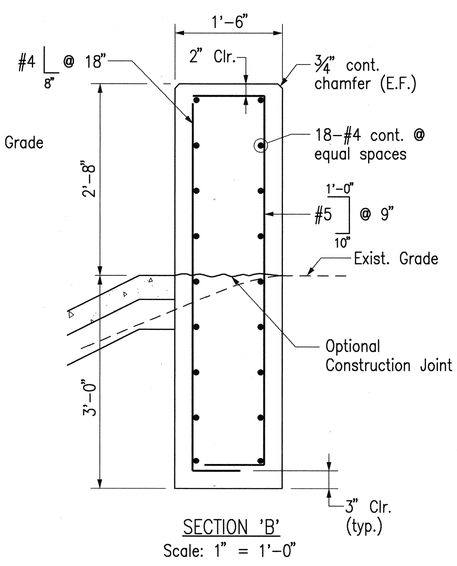

SECTION 'B'
Scale: 1" = 1'-0"

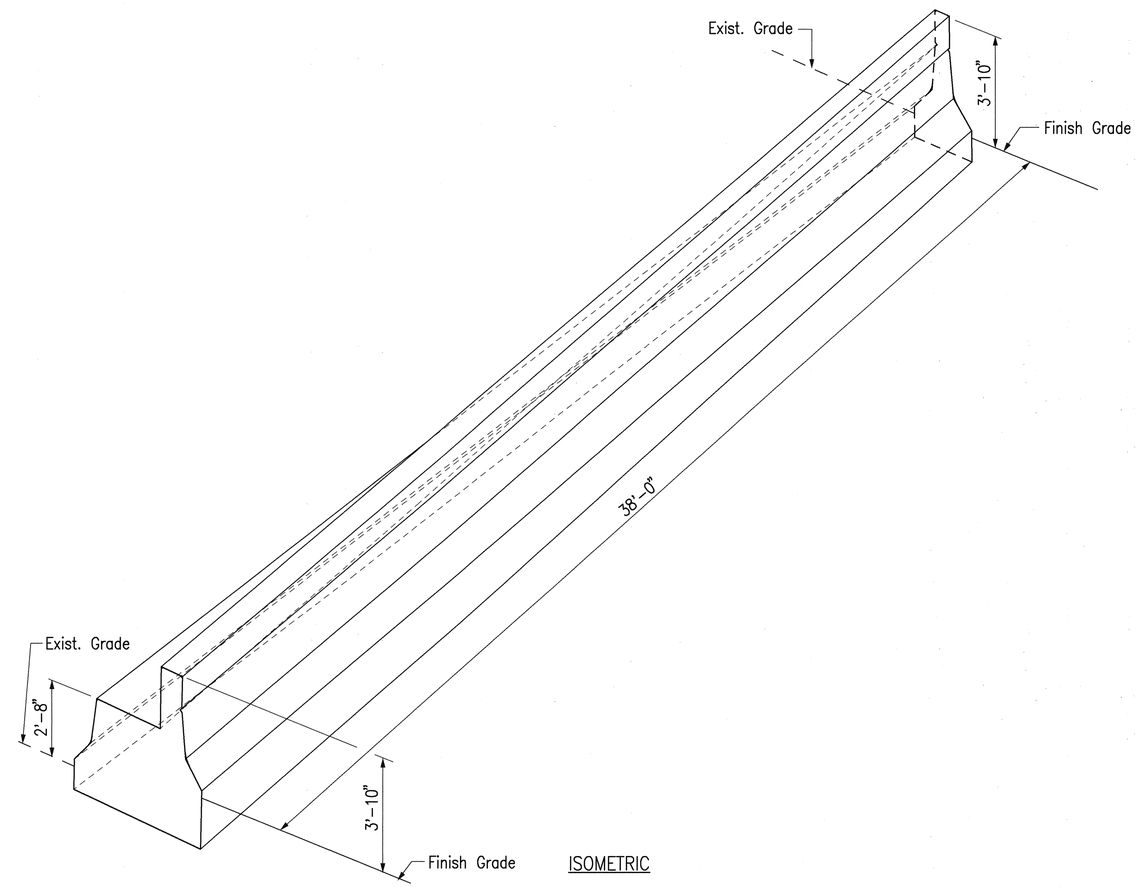

ISOMETRIC

CONCRETE GUARDRAIL TRANSITION
Not to Scale

CONCRETE GUARDRAIL TRANSITION TO BACKUP ASSEMBLY

Date	Revision
10/14/97	Added Sheet

STATE OF HAWAII
DEPARTMENT OF TRANSPORTATION
HIGHWAYS DIVISION

WINDWARD
ROADWAY CONSTRUCTION
DETAILS

H-3 FINISH (UNIT II)
FAIP NO. I-H3-1(75), UNIT II
LEEWARD SECTION

SCALE: AS SHOWN DATE: OCTOBER 1997

HUI PANG CHEN
LICENSED PROFESSIONAL ENGINEER
No. 3865-S
HAWAII, U.S.A.

THIS WORK WAS PREPARED BY ME OR UNDER MY SUPERVISION.

RANDALL M. URASAKI
LICENSED PROFESSIONAL ENGINEER
No. 7269-C
HAWAII, U.S.A.

THIS WORK WAS PREPARED BY ME OR UNDER MY SUPERVISION.

ORIGINAL PLAN | NOTE BOOK | No. ___
SURVEY PLOTTED BY ___ DATE ___
DRAWN BY ___
TRACED BY ___
DESIGNED BY ___
QUANTITIES BY ___
CHECKED BY ___

CAD by J. Mimura, 55-52

Last Saved: J:\H3RF\RFU2\CO\WINDWARD\CO-RCD3.dwg 01/26/98 at 14:06

SHEET NO. 5C4I OF 4 SHEETS

C.O. 837S-9

FED. ROAD DIST. NO.	STATE	FED. AID PROJ. NO.	FISCAL YEAR	SHEET NO.	TOTAL SHEETS
HAWAII	HAW.	I-H3-1(75), UNIT II	1997	C.O. 837S-10	1102

NOTES:

1. 'Terminal Connector' shall be fabricated from 10 gauge steel conforming to the requirements of AASHTO M180.
2. All anchor bolts shall be high strength bolts conforming to the requirements of ASTM 325 and Special Provisions, Section 713.04.
3. Anchor bolt length shall be such that a snug fit of the elements and full thread engagement plus 1/4" (max.) is attained.
4. 'Terminal Connector', tapered box and standard spacer; including all anchor bolts, cap plates, nuts and washers; shall be hot-dip galvanized after fabrication.
5. First 25'-0" of guardrail adjoining 'Terminal Connector' shall be of galvanized steel and supports spaced as shown on the detail drawings. This section of rail shall be placed on tangent to end post or parallel to roadway, unless conditions at site renders it impossible to do so. Flare point to be determined in field.
6. Heads of through anchor bolts shall be placed on the traffic side of the end block.
7. Payment for anchor bolts, nuts, cap plates and metal tapered box spacer block shall be considered incidental to metal guardrail, unless noted otherwise. Payment for the 'Terminal Connector' shall be considered incidental to the Thrie Beam connection.

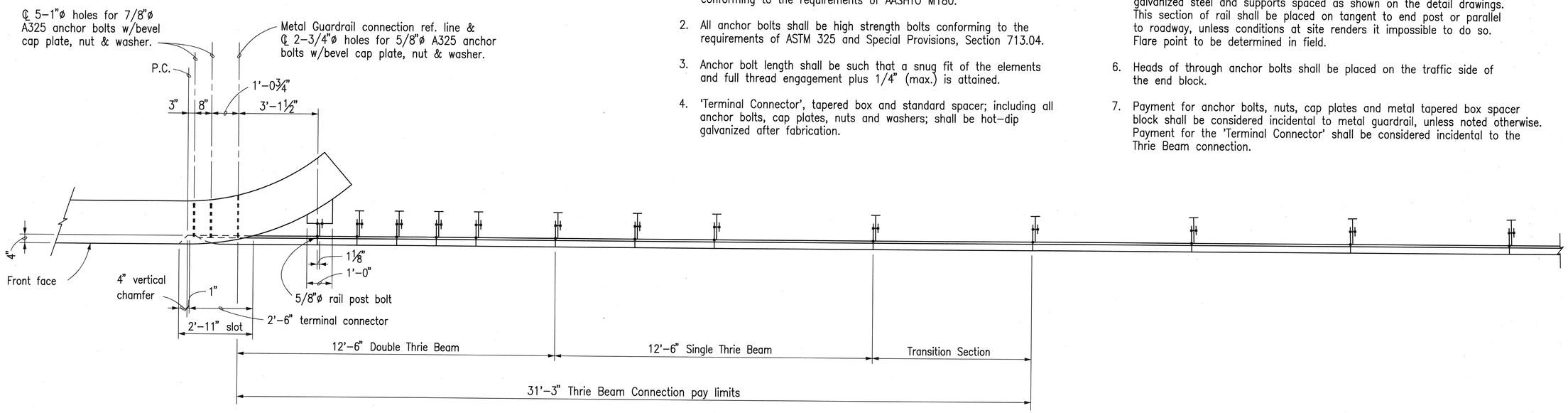

PLAN
Scale: 1/2" = 1'-0"

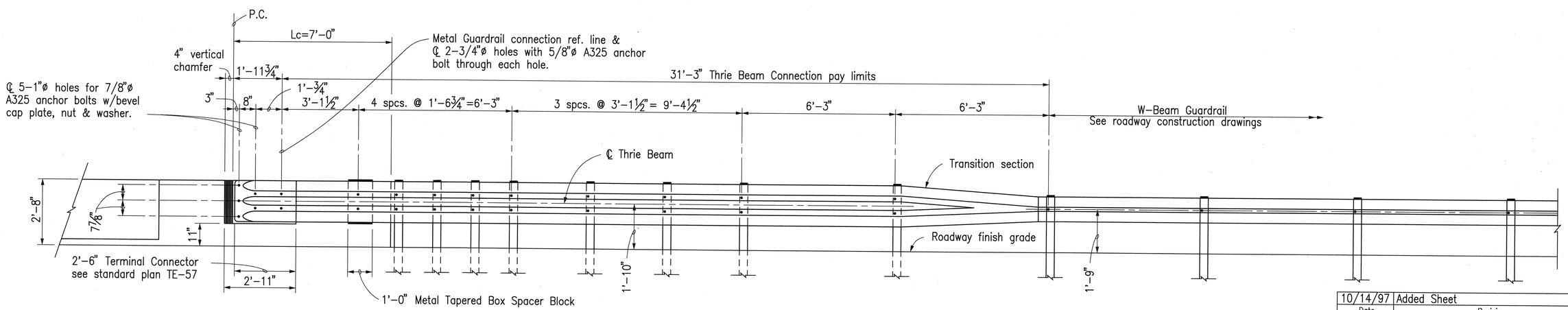

ELEVATION
Scale: 1/2" = 1'-0"

THRIE BEAM CONNECTION TO END POST AND TRANSITION TO W-BEAM GUARDRAIL

Date	Revision
10/14/97	Added Sheet

RANDALL M. URASAKI
LICENSED PROFESSIONAL ENGINEER
No. 7269-C
HAWAII, U.S.A.

THIS WORK WAS PREPARED BY ME OR UNDER MY SUPERVISION.

STATE OF HAWAII
DEPARTMENT OF TRANSPORTATION
HIGHWAYS DIVISION

WINDWARD
ROADWAY CONSTRUCTION
DETAILS

H-3 FINISH (UNIT II)
FAIP NO. I-H3-1(75), UNIT II
LEEWARD SECTION

SCALE: AS SHOWN DATE: OCTOBER 1997

SHEET NO. 5C4J OF 4 SHEETS

C.O. 837S-10

ORIGINAL PLAN | SURVEY PLOTTED BY | DRAWN BY | TRACED BY | DESIGNED BY | QUANTITIES BY | CHECKED BY | DATE
NOTE BOOK No.

CAD by D. Burgess, 55-52

Last Saved: J:\H3RF\RFU2\CO\WINDWARD\CORCDET1.dwg 10/15/97 at 12:11

FED. ROAD DIST. NO.	STATE	FED. AID PROJ. NO.	FISCAL YEAR	SHEET NO.	TOTAL SHEETS
HAWAII	HAW.	I-H3-1(75), UNIT II	1997	C.O. 837S-11	1102

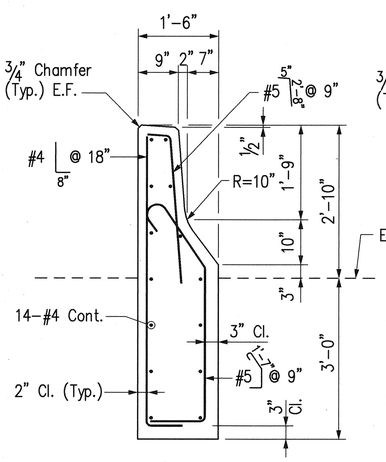

SECTION E
Scale: 3/4" = 1'-0"

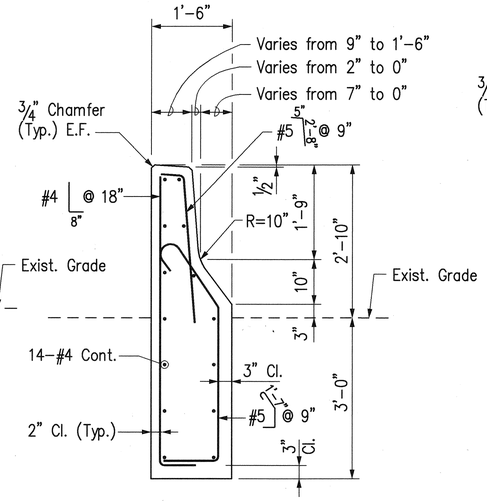

SECTION F
Scale: 3/4" = 1'-0"

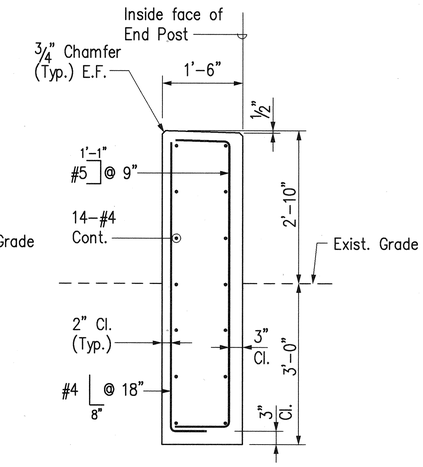

SECTION G
Scale: 3/4" = 1'-0"

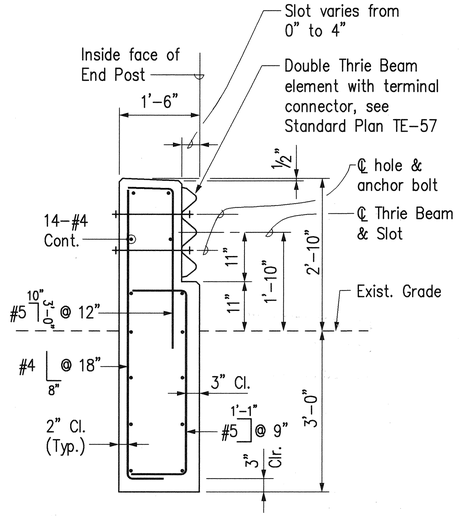

SECTION H
Scale: 3/4" = 1'-0"

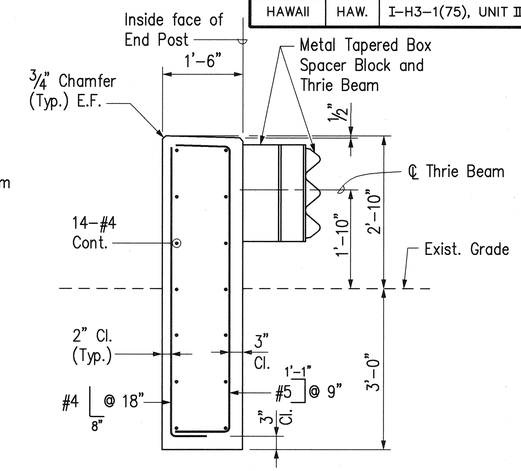

SECTION I
Scale: 3/4" = 1'-0"

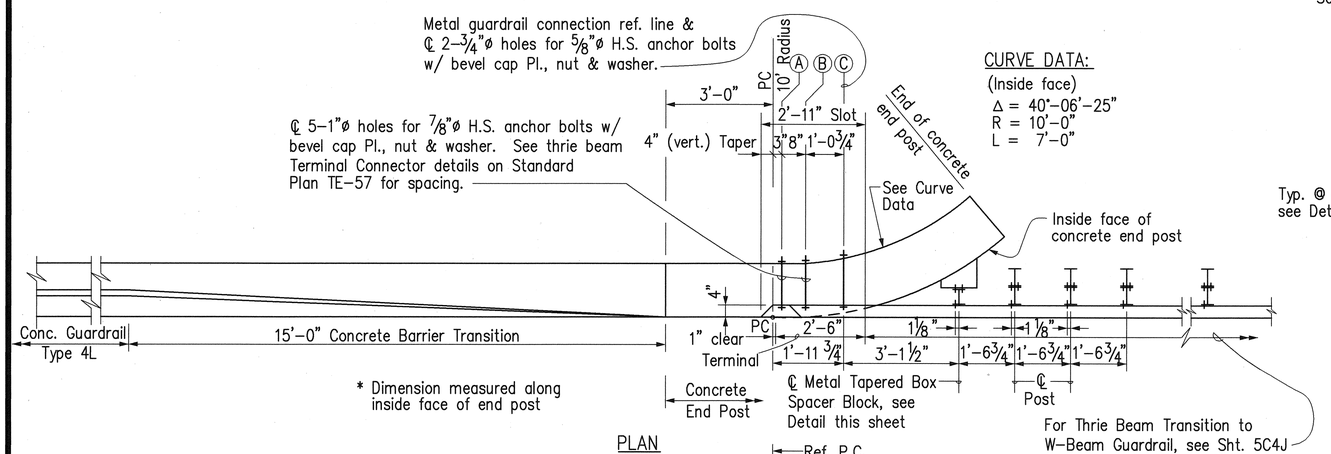

PLAN

CURVE DATA:
(Inside face)
Δ = 40°-06'-25"
R = 10'-0"
L = 7'-0"

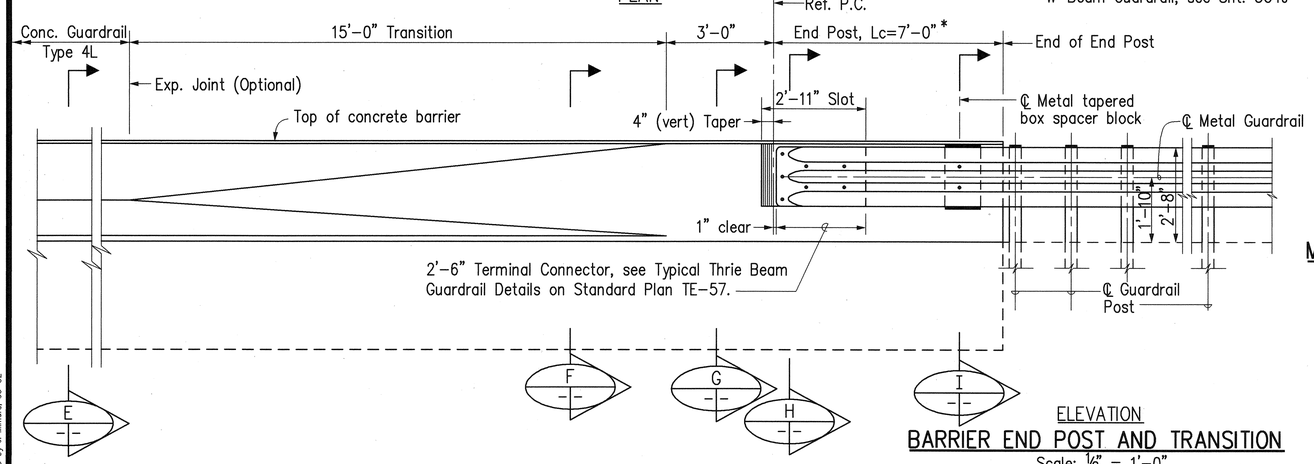

ELEVATION
BARRIER END POST AND TRANSITION
Scale: 1/2" = 1'-0"

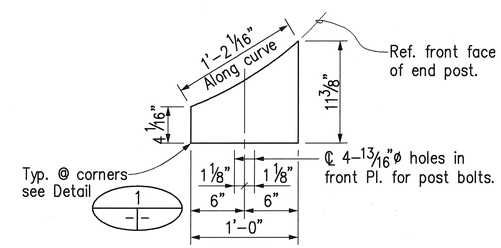

PLAN

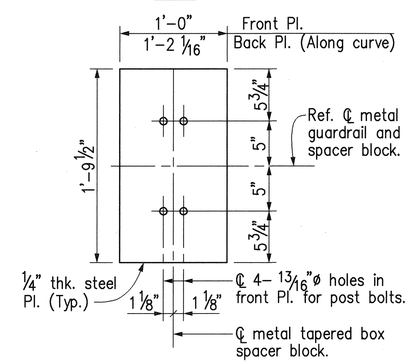

FRONT VIEW
METAL TAPERED BOX SPACER BLOCK
Scale: 1 1/2" = 1'-0"

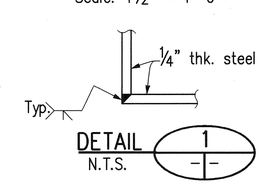

DETAIL 1
N.T.S.

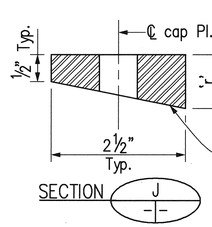

SECTION J

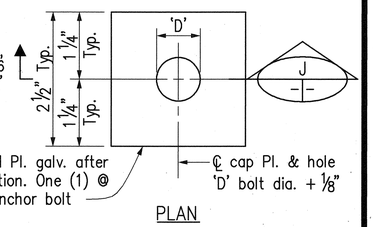

PLAN

CAP (BEARING) PLATE DETAIL
Scale: 3/4" = 1"

NOTES:

1. All reinforcing shall be ASTM A615 Grade 60.
2. Cap Plate and tapered box spacer block shall be fabricated from ASTM A36 steel and hot-dip galvanized after fabrication.
3. Cap Plates, tapered box spacer block, anchor bolts including nuts and washers and other appurtenances shall be incidental to concrete railing and will not be paid for separately.
4. All anchor bolts shall be high strength conforming to the requirements of ASTM A325 and shall be galvanized.

Date	Revision
10/14/97	Added Sheet

STATE OF HAWAII
DEPARTMENT OF TRANSPORTATION
HIGHWAYS DIVISION

WINDWARD
ROADWAY CONSTRUCTION DETAILS

H-3 FINISH (UNIT II)
FAIP NO. I-H3-1(75), UNIT II
LEEWARD SECTION

SCALE: AS SHOWN DATE: OCTOBER 1997

HUI PANG CHEN
LICENSED PROFESSIONAL ENGINEER
No. 3865-S
HAWAII, U.S.A.

THIS WORK WAS PREPARED BY ME OR UNDER MY SUPERVISION.

Hui Pang Chen

SHEET NO. 5C4K OF 4 SHEETS

C.O. 837S-11

ORIGINAL PLAN
SURVEY PLOTTED BY
DRAWN BY
TRACED BY
DESIGNED BY
QUANTITIES BY
CHECKED BY
DATE
NOTE BOOK No.

CAD by J. Mimura, 5S-52

Last Saved: J:\H3RF\RFU2\CO\STRUCT\CO-SX5.dwg 10/16/97 at 16:16

FED.ROAD DIST.NO.	STATE	PROJ. NO.	FISCAL YEAR	SHEET NO.	TOTAL SHEETS
HAWAII	HAW.	I-H3-1(75) UNIT 11	1997	838	1102

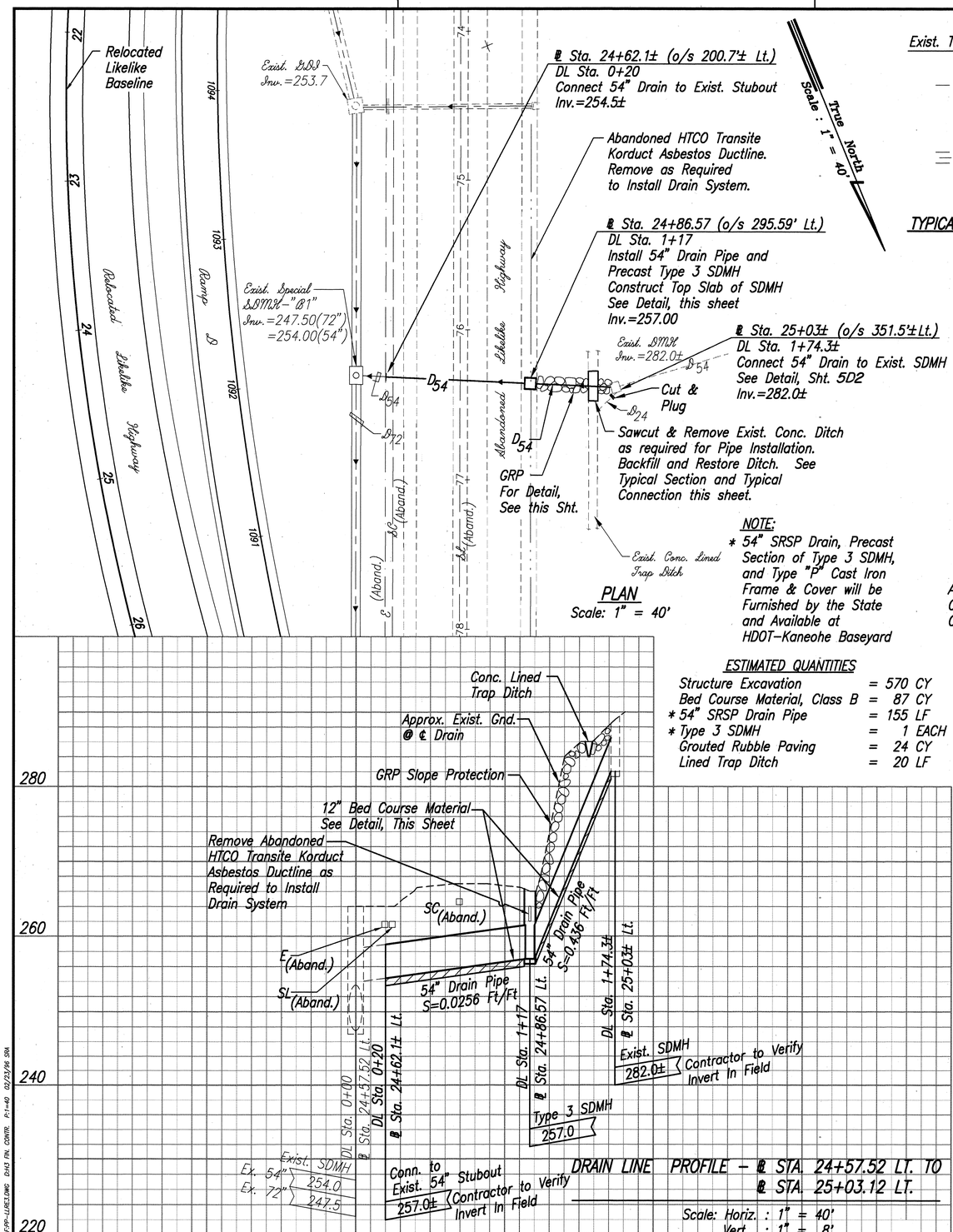

PLAN
Scale: 1" = 40'

NOTE:
* 54" SRSP Drain, Precast Section of Type 3 SDMH, and Type "P" Cast Iron Frame & Cover will be Furnished by the State and Available at HDOT-Kaneohe Baseyard

ESTIMATED QUANTITIES

Structure Excavation	=	570 CY
Bed Course Material, Class B	=	87 CY
* 54" SRSP Drain Pipe	=	155 LF
* Type 3 SDMH	=	1 EACH
Grouted Rubble Paving	=	24 CY
Lined Trap Ditch	=	20 LF

DRAIN LINE PROFILE – @ STA. 24+57.52 LT. TO @ STA. 25+03.12 LT.

Scale: Horiz. : 1" = 40'
Vert. : 1" = 8'

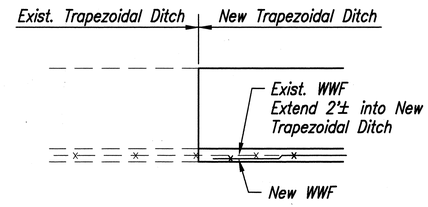

TYPICAL CONNECTION TO EXIST. TRAP DITCH
Not to Scale

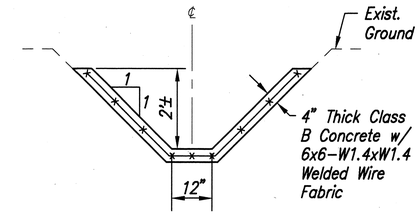

TYPICAL SECTION – NEW/EXIST. DITCH
Not to Scale

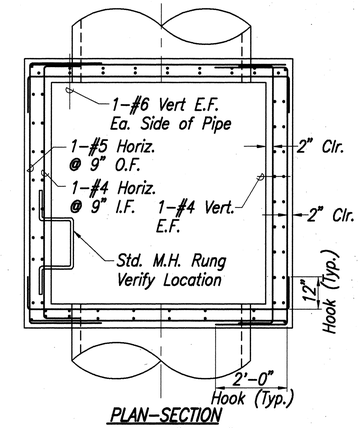

PLAN-SECTION
Scale: 1/2"=1'-0"

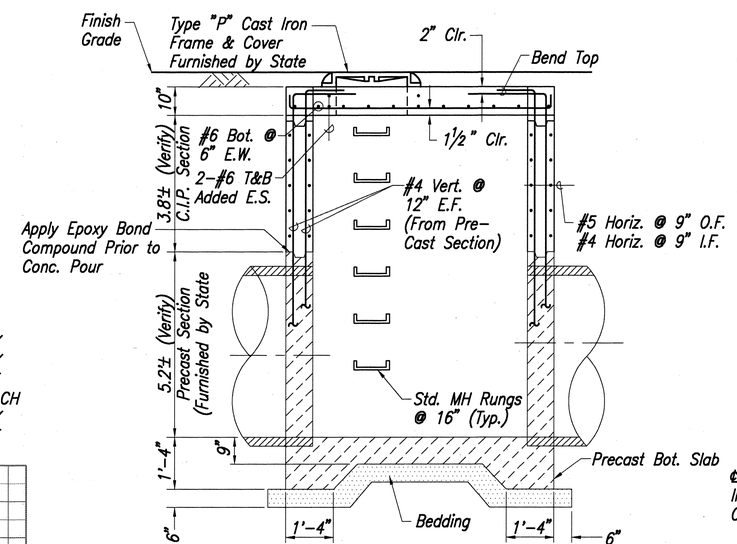

SECTION
Scale: 1/2"=1'-0"

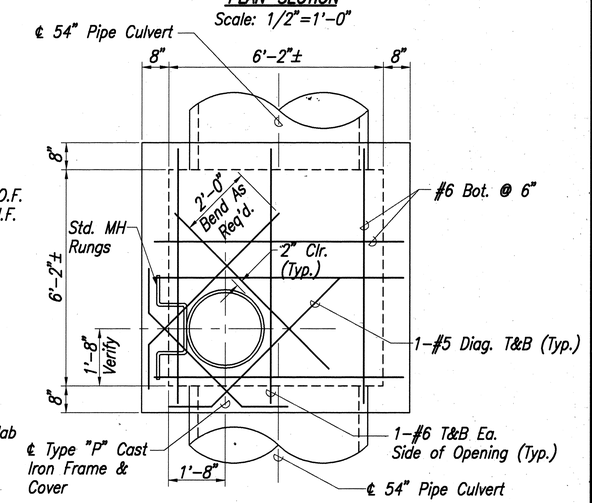

PLAN-TOP SLAB
Scale: 1/2"=1'-0"

NOTES:
1. VERIFY DIMENSIONS OF STATE FURNISHED PRECAST PORTION OF MANHOLE
2. CLEAN REINFORCING STEEL AS REQUIRED.

TYPE 3 STORM DMH DETAIL

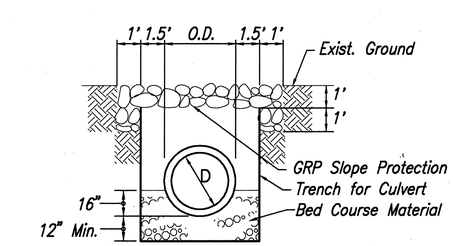

TYPICAL SECTION ~ GRP SLOPE PROTECTION/ CLASS B BEDDING TRENCH DETAIL
Not to Scale

HAROLD TAKASHI MIYAMOTO LICENSED PROFESSIONAL ENGINEER No. 1514-S HAWAII, U.S.A.

THIS WORK WAS PREPARED BY ME OR UNDER MY SUPERVISION

ARNOLD H. FUKUMOTO LICENSED PROFESSIONAL ENGINEER No. 8393-C HAWAII, U.S.A.

THIS WORK WAS PREPARED BY ME OR UNDER MY SUPERVISION.

STATE OF HAWAII
DEPARTMENT OF TRANSPORTATION
HIGHWAYS DIVISION
WINDWARD
54" SRSP DRAIN
AT RELOCATED LIKELIKE HIGHWAY

H-3 FINISH (UNIT 11)
F.A.I. PROJ. NO. I-H3-1(75) UNIT 11
LEEWARD SECTION

SCALE: AS NOTED DATE: JAN., 1997

SHEET No. 5D1 OF 2 SHEETS

DATE	REVISION

ORIGINAL PLAN | SURVEY PLOTTED BY | DRAWN BY | TRACED BY | DESIGNED BY | QUANTITIES BY | CHECKED BY | DATE
NOTE BOOK No.

83-45.6 F.P.-LIKELIKE DHS RN CONR. P1-40 02/23/96 SPA

FED.ROAD DIST.NO.	STATE	PROJ. NO.	FISCAL YEAR	SHEET NO.	TOTAL SHEETS
HAWAII	HAW.	I-H3-1(75), UNIT II	1997	839	1102

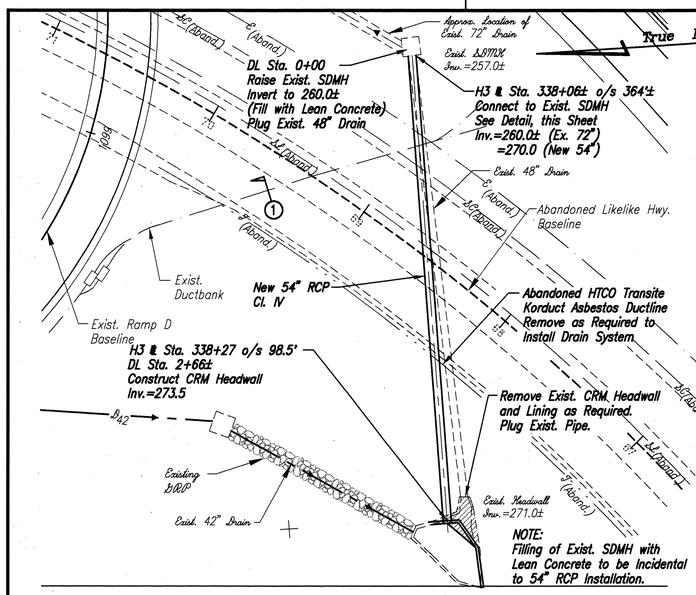

DRAINAGE PLAN
Scale: 1" = 40'

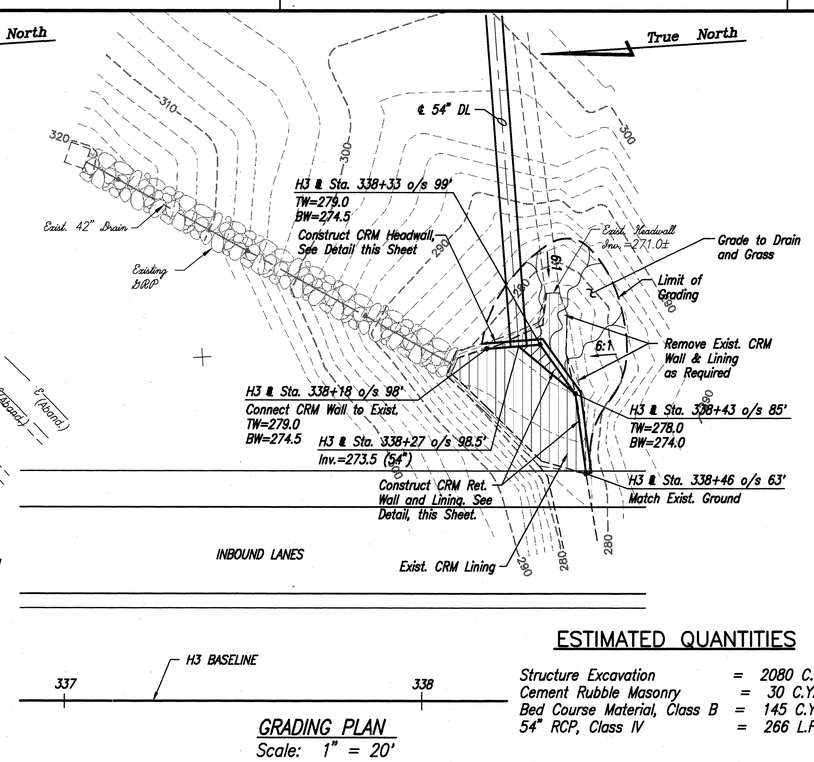

GRADING PLAN
Scale: 1" = 20'

ESTIMATED QUANTITIES

Structure Excavation	=	2080 C.Y.
Cement Rubble Masonry	=	30 C.Y.
Bed Course Material, Class B	=	145 C.Y.
54" RCP, Class IV	=	266 L.F.

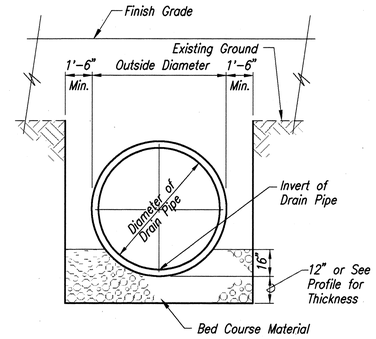

CLASS "B" BEDDING TRENCH DETAIL FOR DRAIN PIPES
NOT TO SCALE

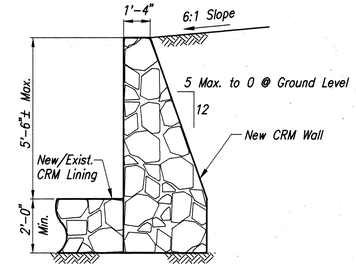

TYP. CRM RETAINING WALL SECTION
NOT TO SCALE

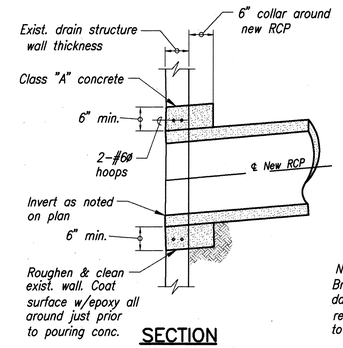

SECTION

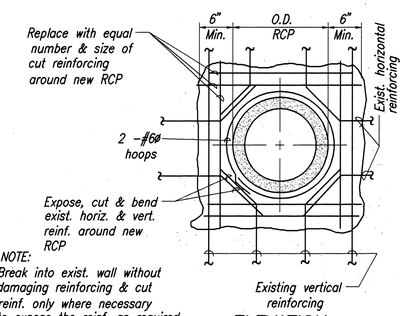

ELEVATION

PIPE CONNECTION TO EXISTING DRAIN STRUCTURE
H3 STA.338+06 & RLL STA.25+03
NOT TO SCALE

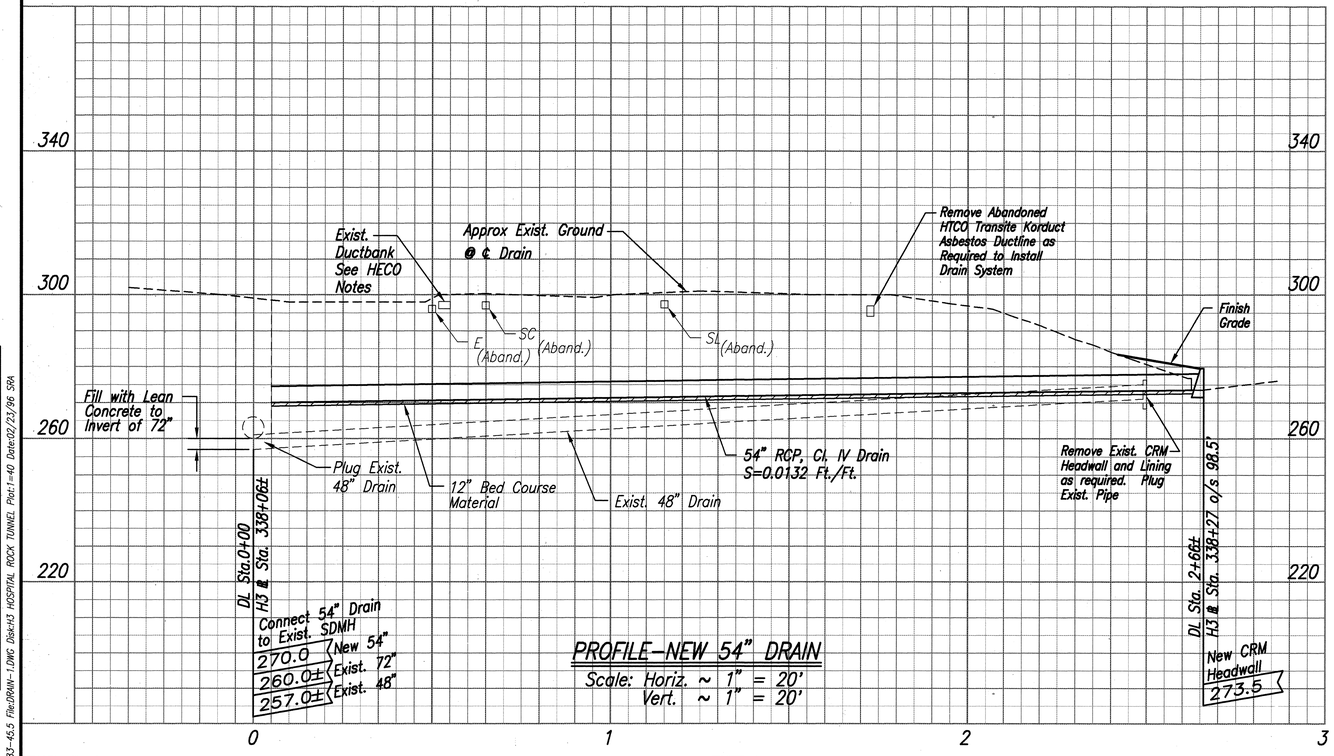

PROFILE-NEW 54" DRAIN
Scale: Horiz. ~ 1" = 20'
Vert. ~ 1" = 20'

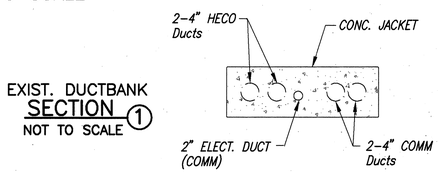

EXIST. DUCTBANK
SECTION 1
NOT TO SCALE

HECO NOTES:

1. LOCATION OF HECO FACILITIES
The location of HECO's underground facilities shown on the plans are from existing records with varying degrees of accuracy and are not guaranteed as shown. The Contractor shall exercise extreme caution whenever construction crosses or is in close proximity of underground lines and shall maintain adequate clearance when operating equipment within or under any overhead lines.

2. UNDERGROUND LINES
For verification of underground lines or for assistance in supporting and protecting these lines, the Contractor shall call HECO's underground division at 543-7345 a minimum of 72 hours in advance.

3. EXCAVATIONS
When trench excavation is adjacent to or beneath HECO existing structures or facilities, the Contractor is responsible for:
A) Sheeting and bracing the excavation to prevent slides, cave-ins and settlements.
B) Protecting existing structures or facilities with beams, struts, or under-pinning.

4. DAMAGE TO HECO FACILITIES
Any damage to HECO's facilities will be reported immediately to HECO's trouble dispatcher at 543-7874.

5. LIABILITY FOR DAMAGES
All HECO overhead and underground facilities shown on these plans or whose approximate locations within the project boundaries have been made known by any reasonable means at any time to the Contractor, shall be protected at all times by the Contractor during construction. Cost for damages to HECO facilities may be borne by the Contractor. This repair work shall be done by HECO, or by the Contractor under HECO'S supervision.

ARNOLD H. FUKUMOTO
LICENSED PROFESSIONAL ENGINEER
No. 8393-C
HAWAII, U.S.A.

THIS WORK WAS PREPARED BY ME OR UNDER MY SUPERVISION.

ENGINEERS SURVEYORS HAWAII, INC.

DATE	REVISION

STATE OF HAWAII
DEPARTMENT OF TRANSPORTATION
HIGHWAYS DIVISION

WINDWARD
54" RCP DRAIN
AT STA. 338+27

H-3 FINISH (UNIT II)
F.A.I. PROJ. NO. I-H3-1(75), UNIT II
SCALE: AS NOTED LEEWARD SECTION DATE: JAN., 1997

SHEET No. 5D2 OF 2 SHEETS

ORIGINAL PLAN | SURVEY PLOTTED BY | DRAWN BY | TRACED BY | DESIGNED BY | QUANTITIES BY | CHECKED BY | DATE
NOTE BOOK No.

83-45.5 File:0HAW-1.DWG Dsk:H3 HOSPITAL ROCK TUNNEL Plot:1=40 Date:02/23/96 SPA

FED. ROAD DIST. NO	STATE	FED. AID PROJ. NO.	FISCAL YEAR	SHEET NO.	TOTAL SHEETS
HAWAII	HAW.	I-H3-1(75), UNIT II	1997	ADD. 839S-1	1102

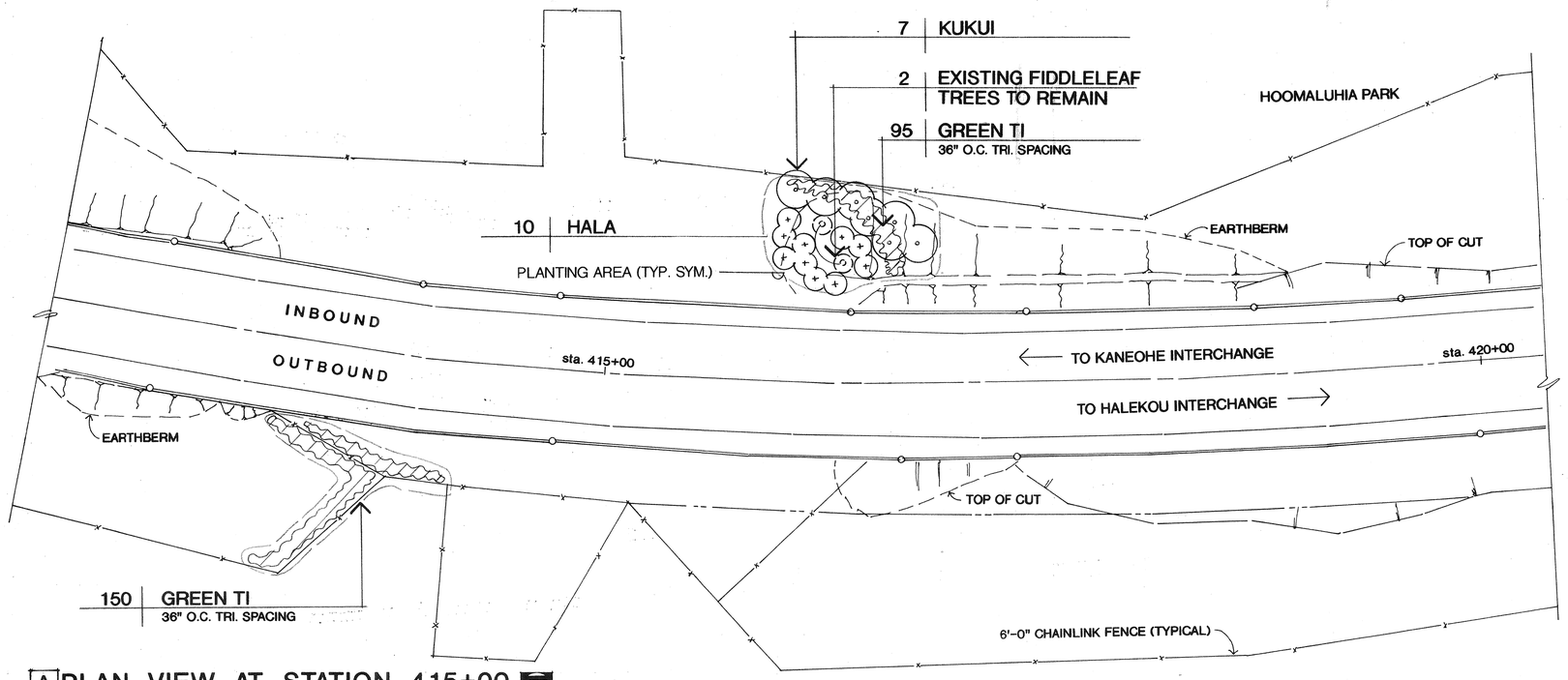

A PLAN VIEW AT STATION 415+00

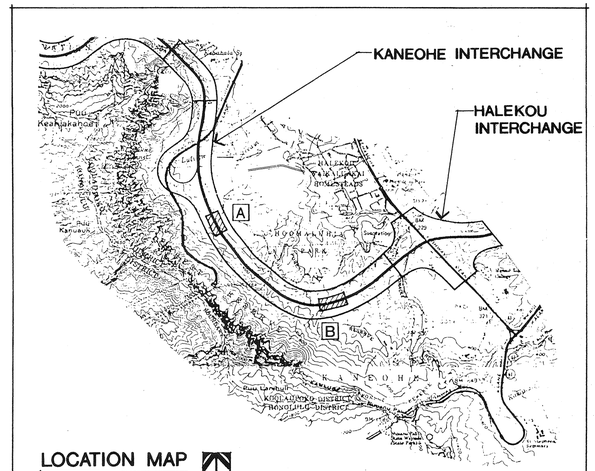

LOCATION MAP
N.T.S.

QUANTITY	COMMON NAME	BOTANICAL NAME	HT. / SP.	SIZE
85	KUKUI NUT	Aleurites moluccana	6'-8' HT. 1" CAL	15 GAL.
48	HALA	Pandanus odoratissimus	2'-3' SP.	15 GAL.
245	GREEN TI	Cordyline terminalis	1'-2' HT.	1 GAL.

NOTE:

1. Contractor shall clear and grub planting areas prior to planting trees and shrubs. See Specifications 619.03(A) Advanced Preparation of Planting Areas.
2. Contractor is responsible for watering of plant material as needed for healthy growth. The watering of plant material shall be considered to be incidental to the contract and shall be at no additional cost to the State.
3. See Plan Sheet 1L8 for Planting Details.

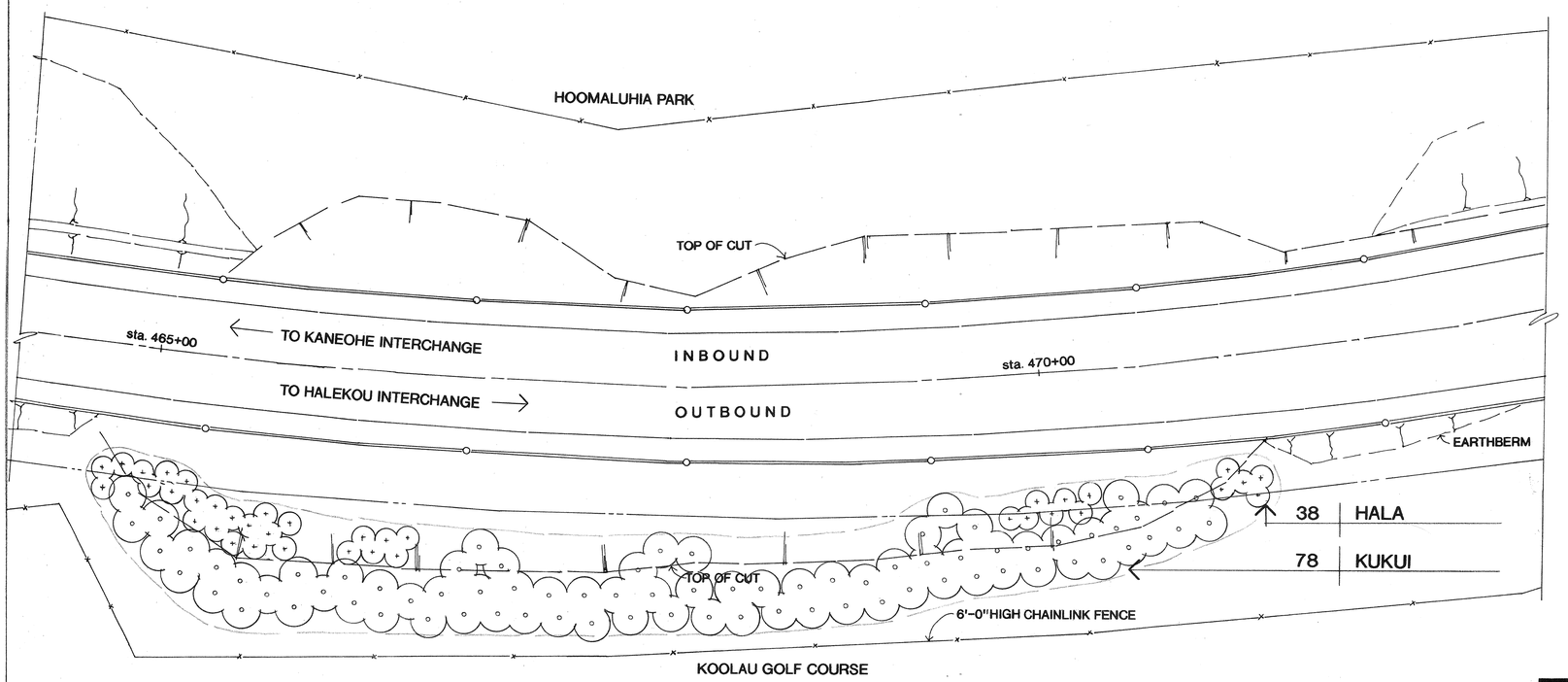

B PLAN VIEW AT STATION 470+00

ORIGINAL PLAN
SURVEY PLOTTED BY
DRAWN BY
TRACED BY
DESIGNED BY
QUANTITIES BY
CHECKED BY
DATE
NOTE BOOK
No.

PBR HAWAII

0 10 20 40 80
FEET

W. FRANK BRANDT
LICENSED PROFESSIONAL LANDSCAPE ARCHITECT No. 2808
HAWAII, U.S.A.

THIS WORK WAS PREPARED BY ME OR UNDER MY SUPERVISION.

DATE	REVISION
4/16/97	ADDED SHEET

STATE OF HAWAII
DEPARTMENT OF TRANSPORTATION
HIGHWAYS DIVISION

WINDWARD
LANDSCAPE
PLANTING PLAN

H-3 FINISH (UNIT II)
FAIP NO. I-H3-1(75), UNIT II
LEEWARD SECTION

SCALE: 1"=40' DATE: JANUARY 1997

SHEET NO. 5L1 OF 1 SHEETS

ADD. 839S-1

FED. ROAD DIST. NO.	STATE	FED. AID PROJ. NO.	FISCAL YEAR	SHEET NO.	TOTAL SHEETS
HAWAII	HAW.	I-H3-1(75), UNIT II	1997	ADD 839S-2	1102

LEGEND

• • • • •	CONES OR DELINEATORS FOR WORK AREA. FOR SPACING, SEE SECTION 645-TRAFFIC CONTROL, TABLE 645-I - FOR TRAFFIC CONTROL PLAN
× × × × ×	CONES OR DELINEATORS FOR TAPER AND TANGENT. FOR SPACING, SEE SECTION 645-TRAFFIC CONTROL, TABLE 645-I - FOR TRAFFIC CONTROL PLAN
←	DETOUR TRAFFIC DIRECTION
←	EXISTING TRAFFIC DIRECTION
	FLASHING ARROW BOARD
oooooo	INERTIAL BARRIER
	PORTABLE CONCRETE GUARDRAIL
I I I	TYPE I BARRICADE
	WORK AREA

GENERAL NOTES FOR TRAFFIC CONTROL PLAN

1. The Contractor shall make minor adjustments at intersections, bridges, structures, etc., to fit field conditions.
2. Cones or delineators shall be extended to a point where they are visible to approaching traffic.
3. Traffic control devices shall be installed such that the sign or device farthest from the work area shall be placed first. The others shall then be placed progressively toward the work area.
4. Regulatory and warning signs within the construction zone that are in conflict with the Traffic Control Plans shall be removed or covered. All signs shall be restored upon completion of the work.
5. Flaggers and/or police officers shall be in sight of each other or in direct communications at all times.
6. When required by the District Engineer, the Contractor shall install a flashing arrow signal as shown on the Traffic Control Plans.
7. Sign spacings (L), taper lengths (T) and spacings of cones or delineators shall be as shown in Table 1 of Section 645 in the Specifications, unless otherwise noted on the Traffic Control Plans.
8. All traffic lanes shall be minimum of 11 feet wide.
9. All construction warning signs shall be promptly removed or covered whenever the message is not applicable or not in use.
10. The backs of all signs used for traffic control shall be appropriately covered to preclude the display of inapplicable sign messages (i.e., when signs have messages on both faces).
11. At the end of each day's work or as soon as the work is completed, the Contractor shall remove all traffic control devices no longer needed to permit free and safe passage of public traffic. Removal shall be in the reverse order of installation.
12. Replace permanent pavement markings and traffic signs upon completion of each phase of work.
13. All lane closures and other traffic pattern changes (detours) not shown on the plans shall be submitted to the Engineer for approval in accordance with Specifications Section 645 - Traffic Control. For restrictions on lane closures, detours, construction work during peak hours, and other requirements regarding maintaining vehicular and pedestrian traffic, see Section 107.13 - Public Convenience and Safety and Section 645 - Traffic Control.
14. All existing ramp lanes shall be open to traffic during non-working hours.
15. Portable concrete guardrail panels not in use during the construction work shall not be stockpiled or otherwise stored within the highway right-of-way except at locations approved by the Engineer.
16. The locations of pavement markings and signs, delineators and portable concrete guardrail panels used in the Construction Phasing shall be as shown on the plans and/or as determined in the field by the Engineer.
17. Damage to signs, temporary pavement markers, delineators and portable concrete guardrail panels caused by the public shall be repaired or replaced by the Contractor as directed by the Engineer and paid for under Section 645. Damage caused by the Contractor's negligence shall be repaired or replaced at the Contractor's expense.
18. The Contractor shall provide sand bags or other accepted weights for the Type I Barricades.
19. Furnishing portable concrete guardrail will be paid under Specifications Section 649-Portable Concrete Guardrail. Transporting, setting, resetting and removing portable concrete guardrail will be paid under Specifications Section 672-Reset Portable Concrete Guardrail Section.
20. The Contractor shall provide steady burn amber lamps during hours of darkness. The lamps shall be attached on the Type I Barricade end closest to the traveled way. One (1) lamp shall be attached to each portable concrete barrier along the traveled way. The lamps shall be visible to the motorist.

STANLEY T. KATSURA
LICENSED PROFESSIONAL ENGINEER
No. 7254-C
HAWAII, U.S.A.

THIS WORK WAS PREPARED BY ME OR UNDER MY SUPERVISION.

Date	Revision
5/2/97	Added Sheet

STATE OF HAWAII
DEPARTMENT OF TRANSPORTATION
HIGHWAYS DIVISION

WINDWARD
TRAFFIC CONTROL PLAN
NOTES & LEGEND

H-3 FINISH (UNIT II)
FAIP NO. I-H3-1(75), UNIT II
LEEWARD SECTION

SCALE: NONE DATE:

SHEET NO. 5F1 OF 5 SHEETS

ADD. 839S-2

ORIGINAL PLAN | SURVEY PLOTTED BY ____ DATE
DRAWN BY ____
NOTE BOOK | TRACED BY ____
DESIGNED BY ____
QUANTITIES BY ____
CHECKED BY ____
No. ____

CAD by L.Yoshimura, 5S-52

Last Saved: J:\H3RF\RFU2\WINDWARD\NOTES.dwg 04/29/97 at 21:18

FED. ROAD DIST. NO.	STATE	FED. AID PROJ. NO.	FISCAL YEAR	SHEET NO.	TOTAL SHEETS
HAWAII	HAW.	I-H3-1(75), UNIT II	1997	ADD 839S-3	1102

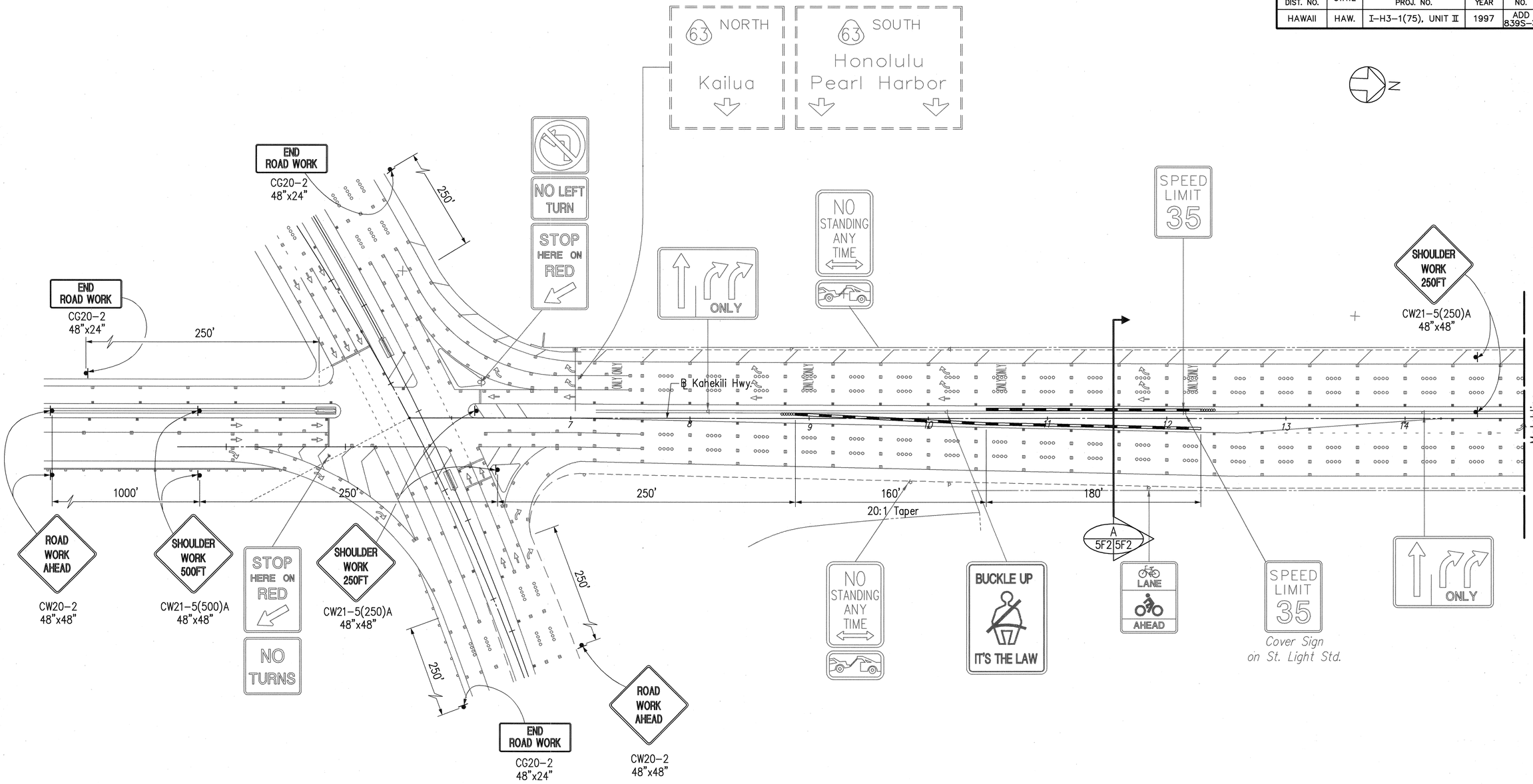

PHASE I – NON WORK HOURS

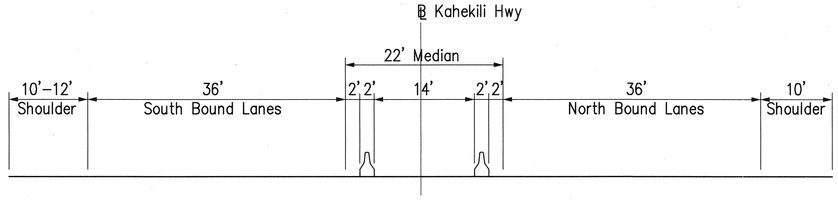

A
5F2 5F2
SECTION
Scale: 1' – 10'-0"

Date	Revision
5/2/97	Added sheet

STATE OF HAWAII
DEPARTMENT OF TRANSPORTATION
HIGHWAYS DIVISION

WINDWARD

TRAFFIC CONTROL PLAN – 1

VMS @ KAHEKILI HIGHWAY

H-3 FINISH (UNIT II)
FAIP NO. I-H3-1(75), UNIT II
LEEWARD SECTION

SCALE: 1' = 40' DATE: MAY 1997

STANLEY T. KATSURA
LICENSED PROFESSIONAL ENGINEER
No. 7254-C
HAWAII, U.S.A.

THIS WORK WAS PREPARED BY ME OR UNDER MY SUPERVISION.

SHEET NO. 5F2 OF 5 SHEETS

ADD. 839S-3

ORIGINAL PLAN
SURVEY PLOTTED BY
DRAWN BY
TRACED BY
DESIGNED BY
QUANTITIES BY
CHECKED BY
DATE
NOTE BOOK No.

CAD by L. Yoshimura, 55-52

Last Saved: J:\H3RF\RFU2\WINDWARD\TCPKAH1A.dwg 04/29/97 at 20:23

FED. ROAD DIST. NO.	STATE	FED. AID PROJ. NO.	FISCAL YEAR	SHEET NO.	TOTAL SHEETS
HAWAII	HAW.	I-H3-1(75), UNIT II	1997	ADD 839S-4	1102

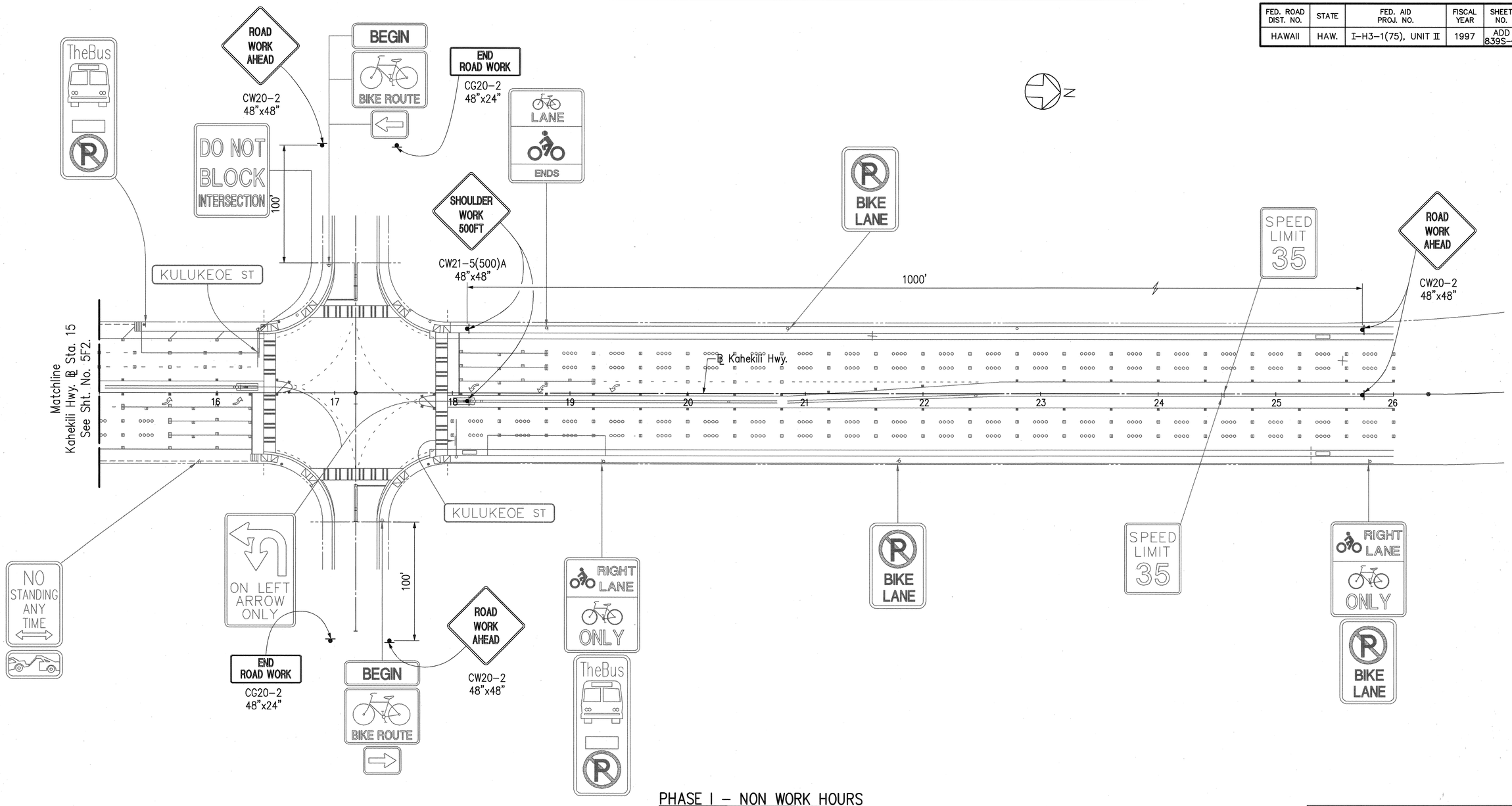

PHASE I - NON WORK HOURS

Date	Revision
5/2/97	Added sheet

STATE OF HAWAII
DEPARTMENT OF TRANSPORTATION
HIGHWAYS DIVISION

WINDWARD
TRAFFIC CONTROL PLAN - 2
VMS @ KAHEKILI HIGHWAY

H-3 FINISH (UNIT II)
FAIP NO. I-H3-1(75), UNIT II
LEEWARD SECTION

SCALE: 1" = 40' DATE: MAY 1997

STANLEY T. KATSURA
LICENSED PROFESSIONAL ENGINEER
No. 7254-C
HAWAII, U.S.A.

THIS WORK WAS PREPARED BY ME OR UNDER MY SUPERVISION.

SHEET NO. 5F3 OF 5 SHEETS

ADD. 839S-4

ORIGINAL PLAN
NOTE BOOK No. ____
SURVEY PLOTTED BY ____ DATE ____
DRAWN BY ____
TRACED BY ____
DESIGNED BY ____
QUANTITIES BY ____
CHECKED BY ____

CAD by L. Yoshimura, 55-52

Last Saved: J:\H3RF\RFU2\WINDWARD\TCPKAH1B.dwg 05/01/97 at 15:30

FED. ROAD DIST. NO.	STATE	FED. AID PROJ. NO.	FISCAL YEAR	SHEET NO.	TOTAL SHEETS
HAWAII	HAW.	I-H3-1(75), UNIT II	1997	ADD 839S-5	1102

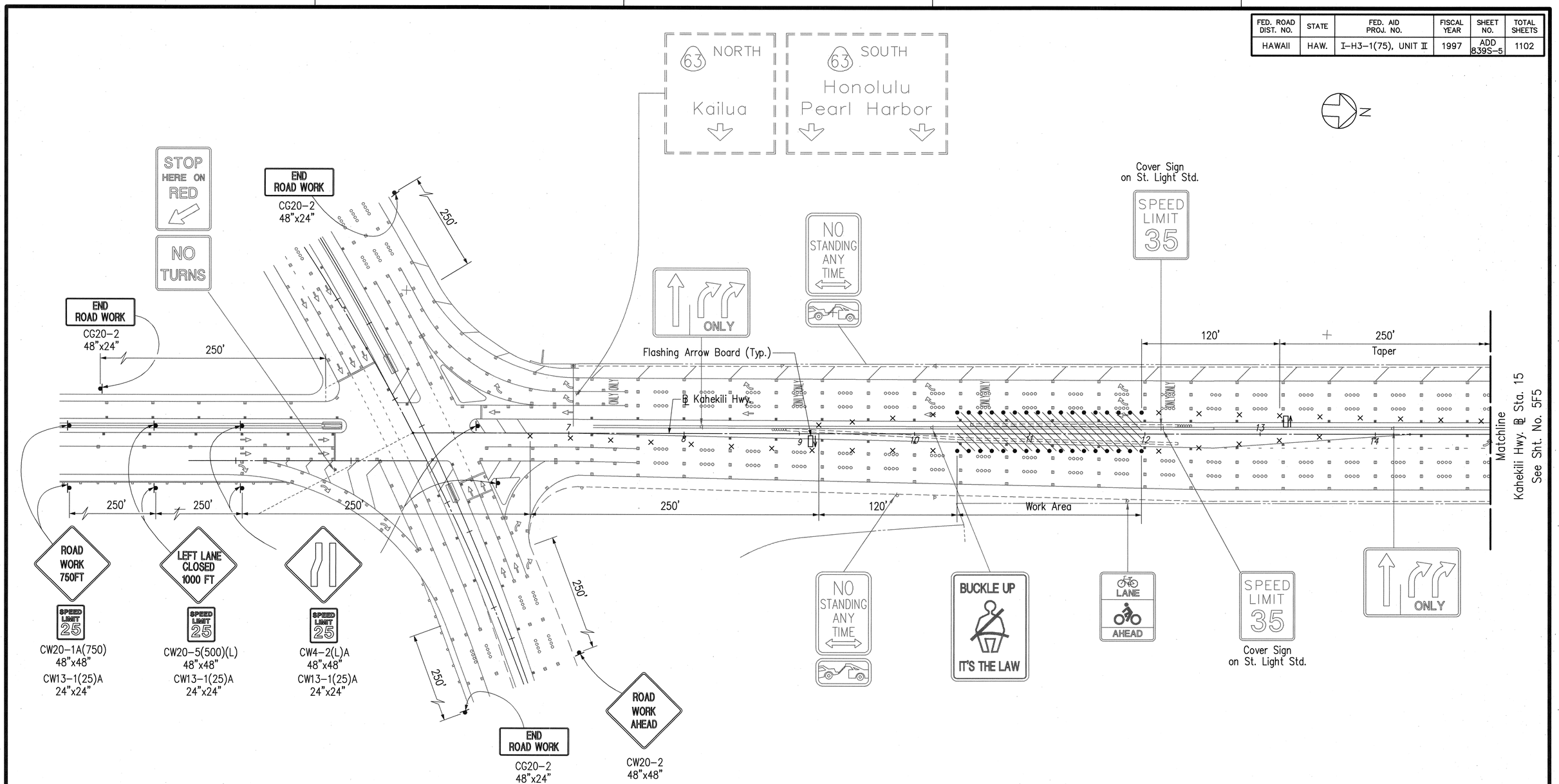

PHASE II – WORK HOURS

Date	Revision
5/2/97	Added sheet

STATE OF HAWAII
DEPARTMENT OF TRANSPORTATION
HIGHWAYS DIVISION

WINDWARD
TRAFFIC CONTROL PLAN – 3
VMS @ KAHEKILI HIGHWAY

H-3 FINISH (UNIT II)
FAIP NO. I-H3-1(75), UNIT II
LEEWARD SECTION

SCALE: 1' = 40' DATE: MAY 1997

STANLEY T. KATSURA
LICENSED PROFESSIONAL ENGINEER
No. 7254-C
HAWAII, U.S.A.

THIS WORK WAS PREPARED BY ME OR UNDER MY SUPERVISION.

SHEET NO. 5F4 OF 5 SHEETS

ADD. 839S-5

ORIGINAL PLAN
NOTE BOOK
No. ____
SURVEY PLOTTED BY ____ DATE ____
DRAWN BY ____
TRACED BY ____
DESIGNED BY ____
QUANTITIES BY ____
CHECKED BY ____

CAD by L. Yoshimura, 55-52

Last Saved: J:\H3RF\RFU2\WINDWARD\TCPKAH2A.dwg 04/29/97 at 20:48

FED. ROAD DIST. NO.	STATE	FED. AID PROJ. NO.	FISCAL YEAR	SHEET NO.	TOTAL SHEETS
HAWAII	HAW.	I-H3-1(75), UNIT II	1997	ADD 839S-6	1102

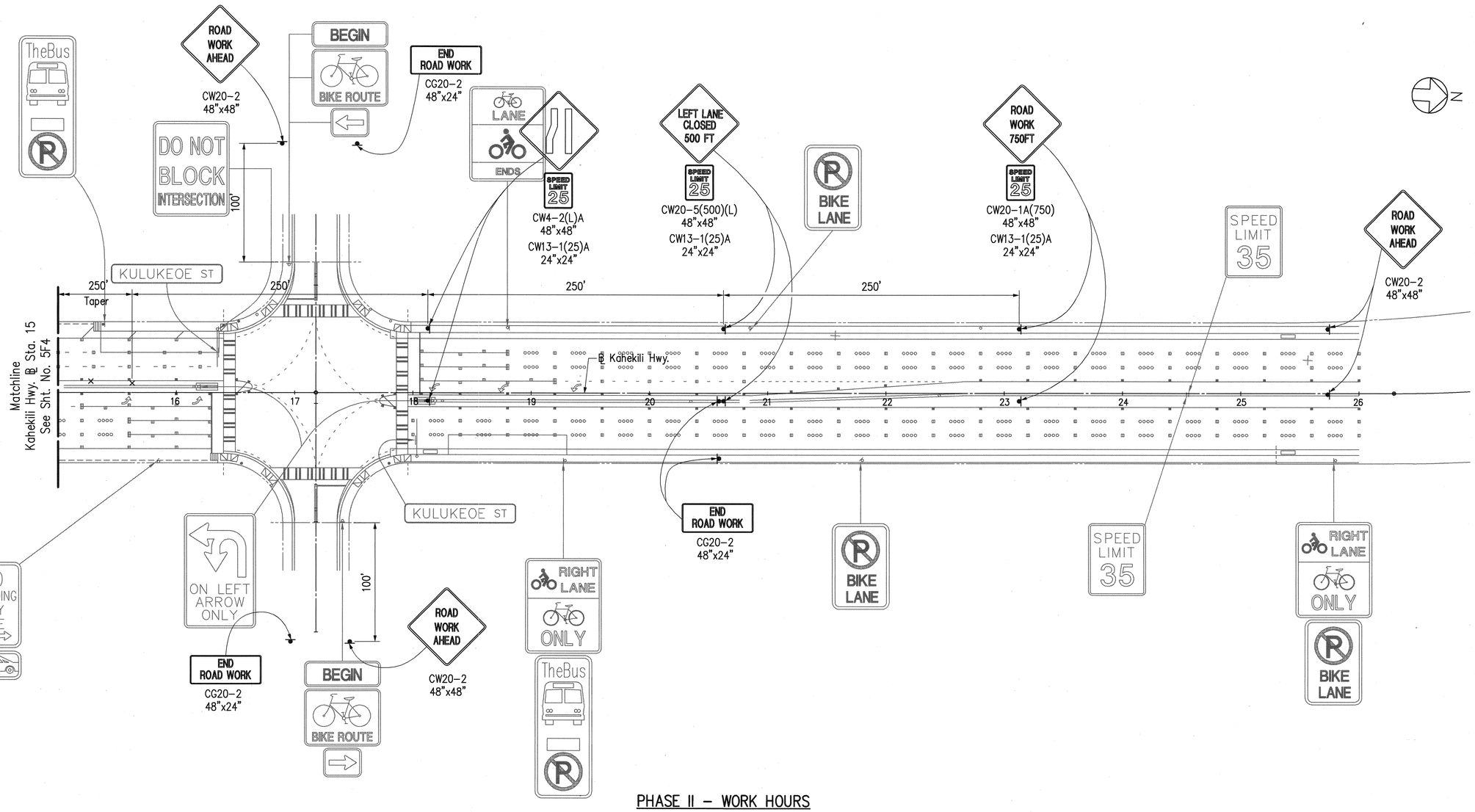

PHASE II - WORK HOURS

ORIGINAL PLAN	
NOTE BOOK	
No.	

		DATE
SURVEY PLOTTED BY		
DRAWN BY		
TRACED BY		
DESIGNED BY		
QUANTITIES BY		
CHECKED BY		

CAD by L. Yoshimura, 55-32

Last Saved: J:\H3RF\RFU2\WNDWARD\TCPKAH2B.dwg 04/29/97 at 21:38

Date	Revision
5/2/97	Added sheet

STATE OF HAWAII
DEPARTMENT OF TRANSPORTATION
HIGHWAYS DIVISION

WINDWARD
TRAFFIC CONTROL PLAN - 4
VMS @ KAHEKILI HIGHWAY

H-3 FINISH (UNIT II)
FAIP NO. I-H3-1(75), UNIT II
LEEWARD SECTION

SCALE: 1" = 40' DATE: MAY 1997

STANLEY T. KATSURA
LICENSED PROFESSIONAL ENGINEER
No. 7254-C
HAWAII, U.S.A.

THIS WORK WAS PREPARED BY ME OR UNDER MY SUPERVISION.

SHEET NO. 5F5 OF 5 SHEETS

ADD. 839S-6

FED. ROAD DIST. NO.	STATE	FED. AID PROJ. NO.	FISCAL YEAR	SHEET NO.	TOTAL SHEETS
HAWAII	HAW.	I-H3-1(75), UNIT II	1997	840	1102

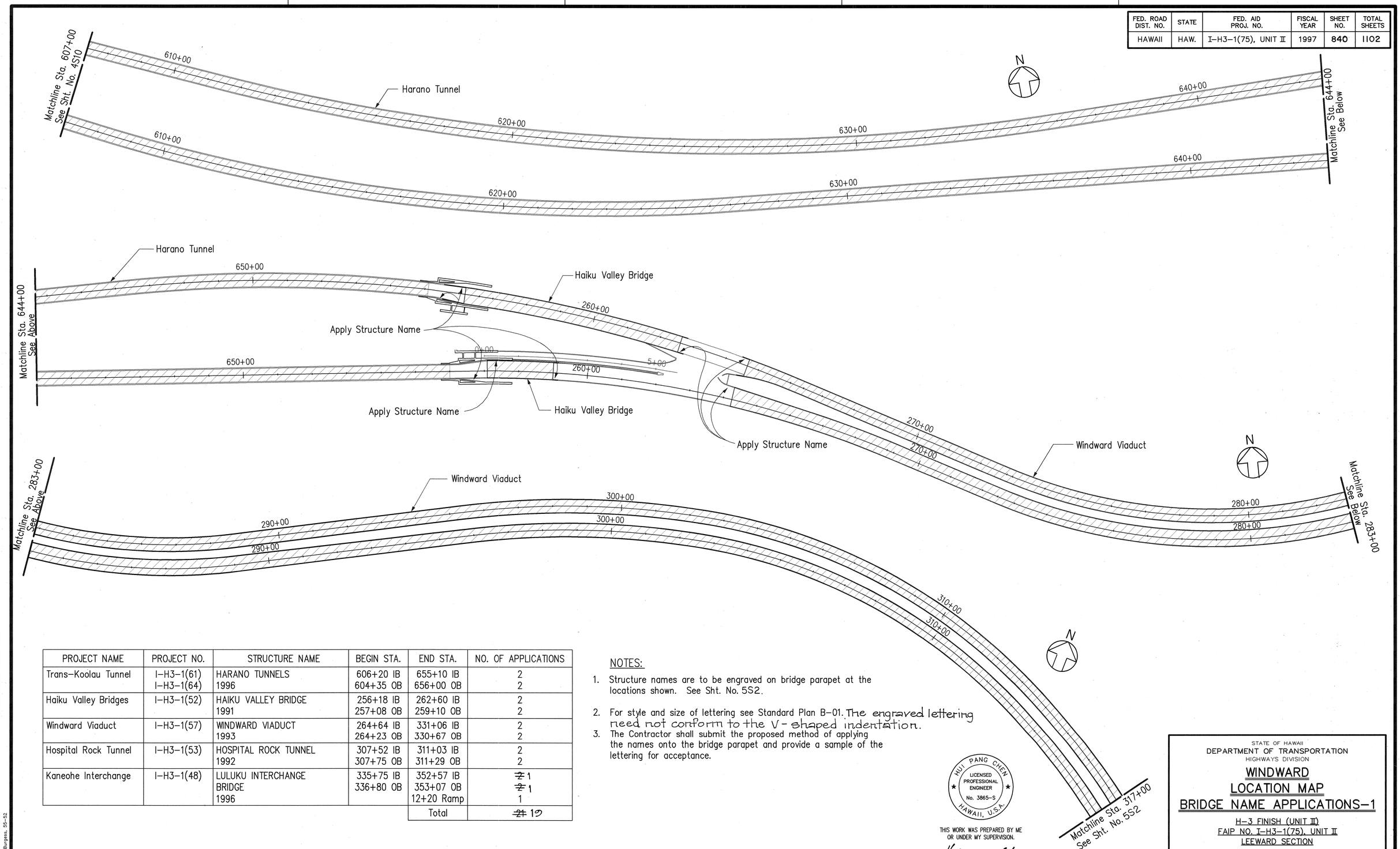

PROJECT NAME	PROJECT NO.	STRUCTURE NAME	BEGIN STA.	END STA.	NO. OF APPLICATIONS
Trans-Koolau Tunnel	I-H3-1(61) I-H3-1(64)	HARANO TUNNELS 1996	606+20 IB 604+35 OB	655+10 IB 656+00 OB	2 2
Haiku Valley Bridges	I-H3-1(52)	HAIKU VALLEY BRIDGE 1991	256+18 IB 257+08 OB	262+60 IB 259+10 OB	2 2
Windward Viaduct	I-H3-1(57)	WINDWARD VIADUCT 1993	264+64 IB 264+23 OB	331+06 IB 330+67 OB	2 2
Hospital Rock Tunnel	I-H3-1(53)	HOSPITAL ROCK TUNNEL 1992	307+52 IB 307+75 OB	311+03 IB 311+29 OB	2 2
Kaneohe Interchange	I-H3-1(48)	LULUKU INTERCHANGE BRIDGE 1996	335+75 IB 336+80 OB	352+57 IB 353+07 OB 12+20 Ramp	~~2~~ 1 ~~2~~ 1 1
				Total	~~21~~ 19

NOTES:

1. Structure names are to be engraved on bridge parapet at the locations shown. See Sht. No. 5S2.
2. For style and size of lettering see Standard Plan B-01. The engraved lettering need not conform to the V-shaped indentation.
3. The Contractor shall submit the proposed method of applying the names onto the bridge parapet and provide a sample of the lettering for acceptance.

HUI PANG CHEN
LICENSED PROFESSIONAL ENGINEER
No. 3865-S
HAWAII, U.S.A.

THIS WORK WAS PREPARED BY ME OR UNDER MY SUPERVISION.

Huipang Chen

STATE OF HAWAII
DEPARTMENT OF TRANSPORTATION
HIGHWAYS DIVISION

WINDWARD LOCATION MAP BRIDGE NAME APPLICATIONS-1

H-3 FINISH (UNIT II)
FAIP NO. I-H3-1(75), UNIT II
LEEWARD SECTION

SCALE: 1"=120' DATE: JANUARY 1997

SHEET NO. 5S1 OF 3 SHEETS

840

ORIGINAL PLAN
NOTE BOOK No. ____
SURVEY PLOTTED BY ____ DATE ____
DRAWN BY ____
TRACED BY ____
DESIGNED BY ____
QUANTITIES BY ____
CHECKED BY ____

CAD by D. Burgess, 95-52

Last Saved: J:\H3RF\RFU2\STRUCT\WIN-LM1.dwg 01/30/97 at 10:01

FED. ROAD DIST. NO.	STATE	FED. AID PROJ. NO.	FISCAL YEAR	SHEET NO.	TOTAL SHEETS
HAWAII	HAW.	I-H3-1(75), UNIT II	1997	841	1102

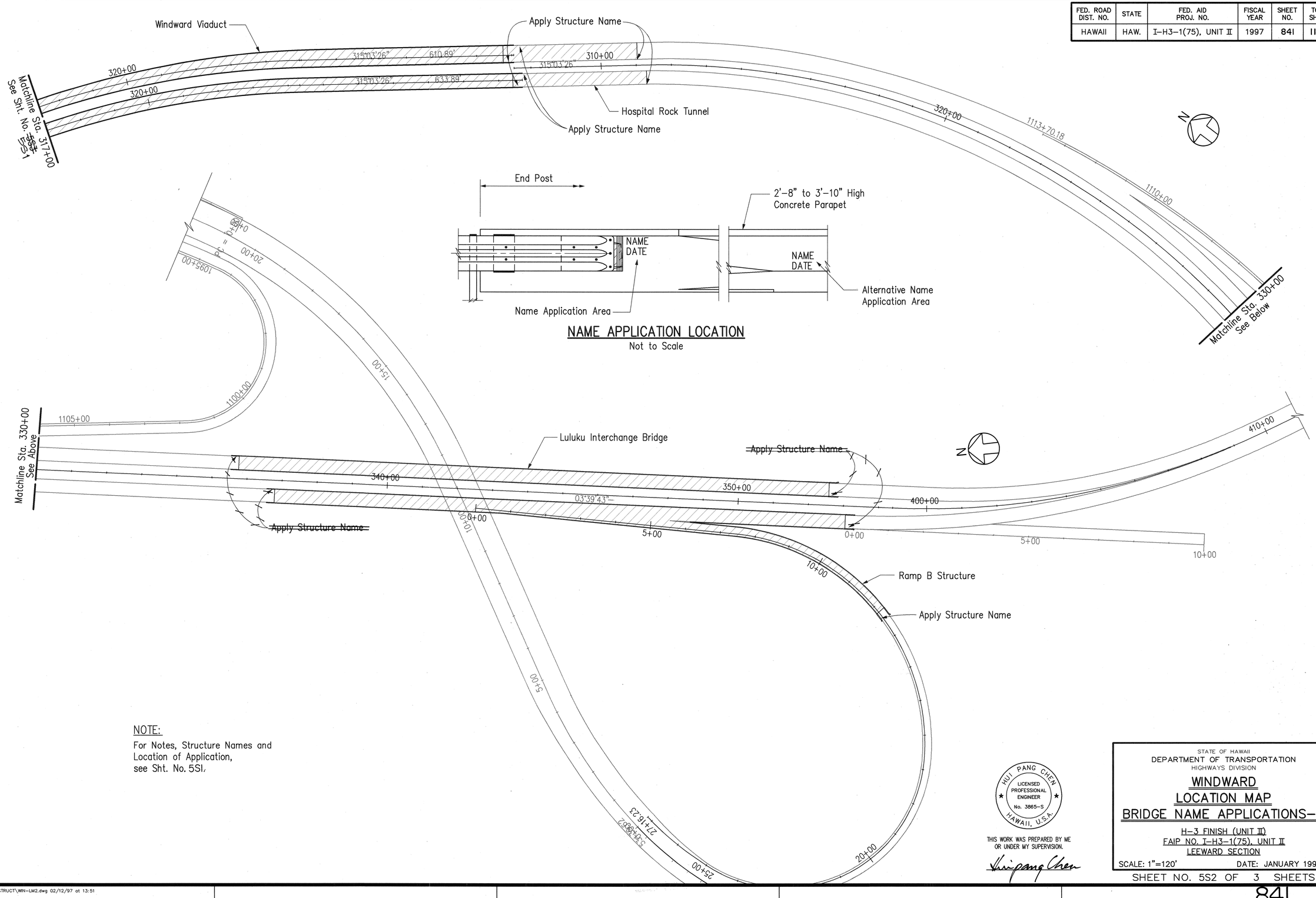

NOTE:

For Notes, Structure Names and Location of Application, see Sht. No. 5SI.

HUI PANG CHEN
LICENSED PROFESSIONAL ENGINEER
No. 3865-S
HAWAII, U.S.A.

THIS WORK WAS PREPARED BY ME OR UNDER MY SUPERVISION.

Huipang Chen

STATE OF HAWAII
DEPARTMENT OF TRANSPORTATION
HIGHWAYS DIVISION

WINDWARD LOCATION MAP BRIDGE NAME APPLICATIONS-2

H-3 FINISH (UNIT II)
FAIP NO. I-H3-1(75), UNIT II
LEEWARD SECTION

SCALE: 1"=120' DATE: JANUARY 1997

SHEET NO. 5S2 OF 3 SHEETS

ORIGINAL PLAN | SURVEY PLOTTED BY ___ DATE ___ | DRAWN BY ___ | TRACED BY ___ | DESIGNED BY ___ | QUANTITIES BY ___ | CHECKED BY ___ | NOTE BOOK No. ___

CAD by D. Burgess, 95-52

Last Saved: J:\H3RF\RFU2\STRUCT\WIN-LM2.dwg 02/12/97 at 13:51

FED. ROAD DIST. NO.	STATE	FED. AID PROJ. NO.	FISCAL YEAR	SHEET NO.	TOTAL SHEETS
HAWAII	HAW.	I-H3-1(75), UNIT II	1997	842	1102

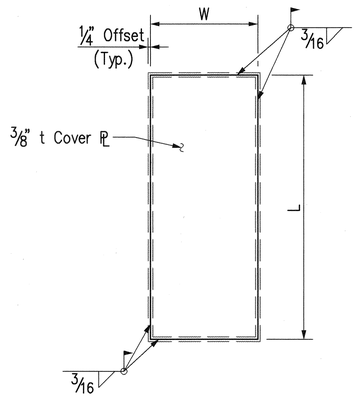

SECTION A
Not to Scale
5S3 | 5S3

TABLE A										
STATION	APPURTENANCE MOUNTED ON STRUCTURE	LEFT POST			MIDDLE POST			RIGHT POST		
		H	COVER PLATE W	COVER PLATE L	H	COVER PLATE W	COVER PLATE L	H	COVER PLATE W	COVER PLATE L
IB 258+66.00	LCD	Not Applicable			Not Applicable			13'-4"	0'-7 1/2"	0'-11 1/2"
IB 273+73.70	FB	18'-8 1/2"	0'-7 1/2"	1'-3 1/2"	Not Applicable			15'-11"	0'-7 1/2"	1'-3 1/2"
IB 290+75.53	OHD	15'-0"	0'-7 1/2"	0'-11 1/2"	Not Applicable			14'-5"	0'-7 1/2"	0'-11 1/2"
IB 311+05.53	LCD	9'-7"	0'-7 1/2"	0'-11 1/2"	Not Applicable			Not Applicable		
OB 259+40.00	FB	20'-1"	0'-7 1/2"	0'-11 1/2"	Not Applicable			21'-9 15/16"	0'-7 1/2"	0'-11 1/2"
OB 261+40.00	LCD	Not Applicable			13'-8 9/16"	0'-7 1/2"	1'-3 1/2"	13'-8 9/16"	0'-7 1/2"	1'-3 1/2"

IB = Inbound
OB = Outbound

FB = Flashing Beacon
OHD = Overheight Detector
LCD = Lane Control Display

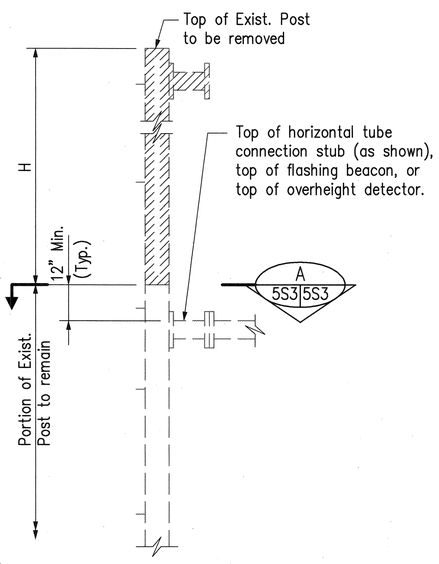

LEFT POST (AS SHOWN)
RIGHT POST (SIMILAR EXCEPT OPPOSITE)

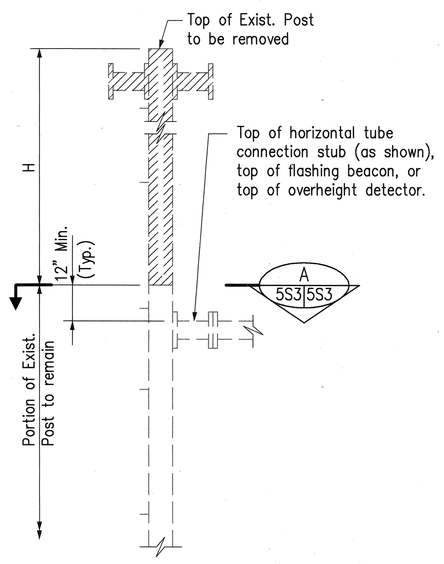

MIDDLE POST

LANE CONTROL DISPLAY SUPPORT STRUCTURE

(LOOKING UPSTATION)
Scale: 1/2" = 1'-0"

NOTES:

1. For dimensions 'H', 'W', and 'L', see Table A. The dimension 'H' is approximate. The contractor shall verify the dimension in the field.
2. Cover Plate shall conform to ASTM A36.
3. All existing support structures shall remain erect, complete and in-place during post modification work at the locations shown in Table A.
4. Welds shall be continuous and shall be done in the field only where shown on plans.
5. Field welds shall be performed by a certified welder. All welding shall conform to the requirements of ANSI/AASHTO/AWS D1.5-~~88~~ 96, "Bridge Welding Code".
6. See Special Provisions Sections 501.03(1)(J), "Removal of Excess Height of the Existing Structural Tubing Posts".
7. The Contractor shall take precautionary measures so that existing, complete in-place support structures and existing support structures-mounted appurtenances are not damaged during post modification work. The appurtenances include lane control displays, traffic signals, variable message signs, weather monitoring devices, changeable message signs, fixed message signs, luminaires, cameras, flashing beacons, and overheight detectors.

LEGEND:

Existing Structure to be removed

HUI PANG CHEN
LICENSED PROFESSIONAL ENGINEER
No. 3865-S
HAWAII, U.S.A.

THIS WORK WAS PREPARED BY ME OR UNDER MY SUPERVISION.

Hui Pang Chen

STATE OF HAWAII
DEPARTMENT OF TRANSPORTATION
HIGHWAYS DIVISION

WINDWARD
EXISTING SUPPORT STRUCTURES
POST MODIFICATIONS

H-3 FINISH (UNIT II)
FAIP NO. I-H3-1(75), UNIT II
LEEWARD SECTION

SCALE: AS SHOWN DATE: JANUARY 1997

SHEET NO. 5S3 OF 3 SHEETS

842

ORIGINAL PLAN | SURVEY PLOTTED BY | DRAWN BY | TRACED BY | DESIGNED BY | QUANTITIES BY | CHECKED BY | DATE | NOTE BOOK | No.

CAD by D. Burgess, 35-52

Last Saved: J:\H3RF\RFU2\SIGN\POSTDET1.dwg 02/21/97 at 10:58

FED. ROAD DIST. NO.	STATE	FED. AID PROJ. NO.	FISCAL YEAR	SHEET NO.	TOTAL SHEETS
HAWAII	HAW.	I-H3-1(75), UNIT II	1997	C.O. 842S-1	1102

*NOTE A:

The Contractor shall verify the tilt of post to determine dimension 't' prior to fabrication of the shim plates. All shim plates shall be ASTM A36 steel hop-dipped galvanized after fabrication.

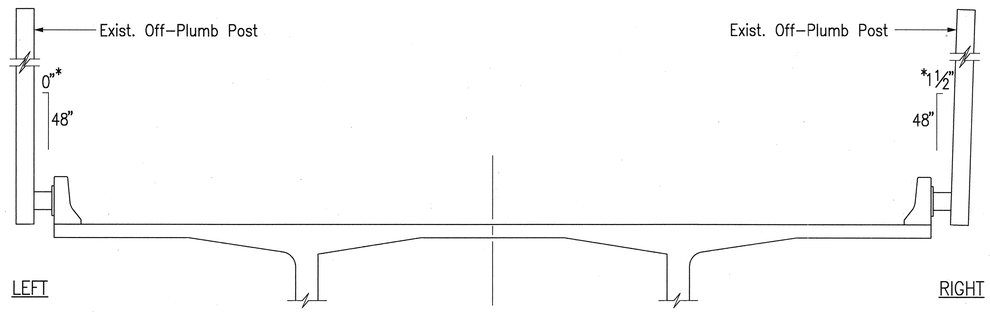

I.B. STA. 273+73.70
(10 Bolt Pattern)
(Looking Toward T-K Tunnel)
Not to Scale

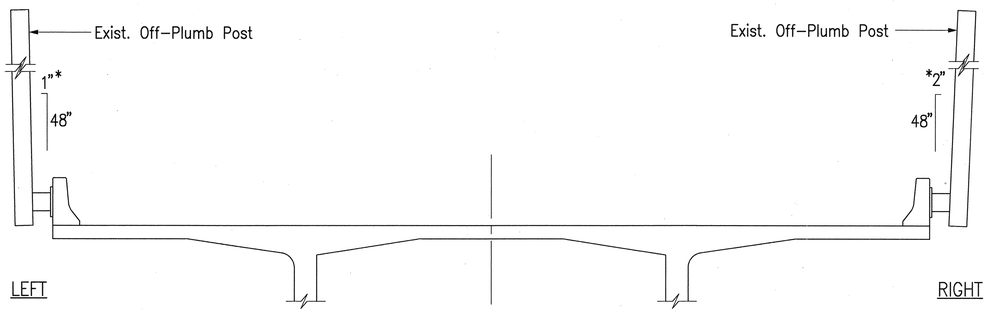

I.B. STA. 290+73.53
(6 Bolt Pattern)
(Looking Toward T-K Tunnel)
Not to Scale

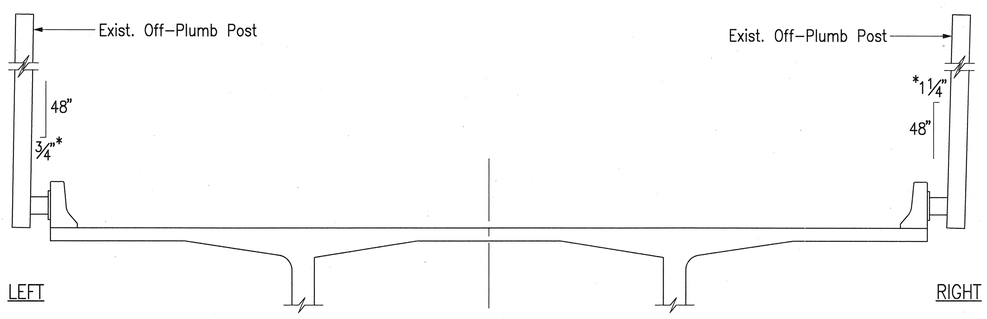

I.B. STA. 311+55.53
(6 Bolt Pattern)
(Looking Toward T-K Tunnel)
Not to Scale

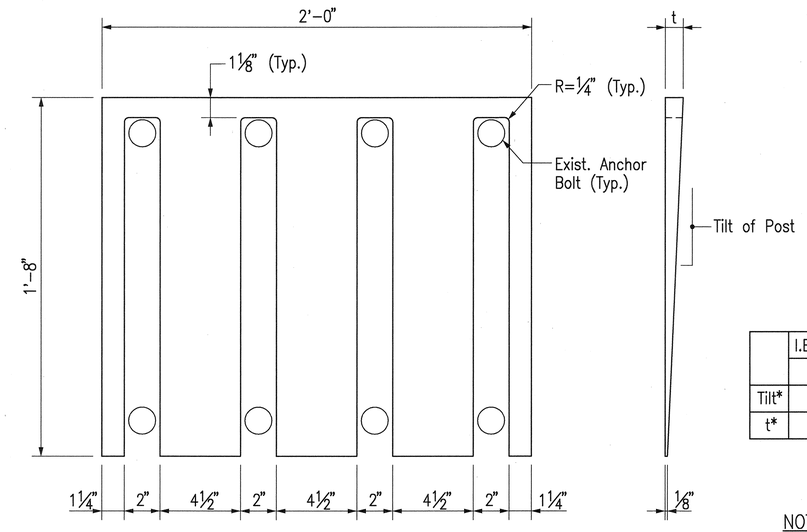

ELEVATION END VIEW

SHIM PLATE FOR 10 BOLT PATTERN
Scale: 3" = 1'-0"

	I.B. STA. 273+73.70		I.B. STA. 290+73.53		I.B. STA. 311+55.53	
	LEFT	RIGHT	LEFT	RIGHT	LEFT	RIGHT
Tilt*	0:48	1½:48	1:48	2:48	¾:48	1¼:48
t*	0	¾"	9/16"	15/16"	7/16"	⅝"

NOTE:

The existing off-plumb post shall be corrected by loosening the existing anchor bolt nuts, pushing out the post slightly, inserting the shim plate between the post base plate and the parapet to correct the tilt, and then re-tightening the high strength bolts and nuts per requirements of specifications.

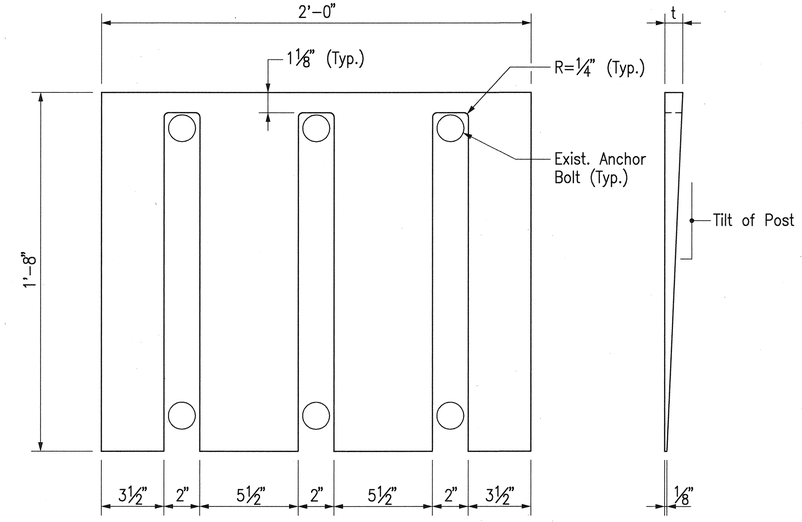

ELEVATION END VIEW

SHIM PLATE FOR 6 BOLT PATTERN
Scale: 3" = 1'-0"

HUI PANG CHEN
LICENSED PROFESSIONAL ENGINEER
No. 3865-S
HAWAII, U.S.A.

THIS WORK WAS PREPARED BY ME OR UNDER MY SUPERVISION.

Hui Pang Chen

Date	Revision
10/10/97	Added this sheet.

STATE OF HAWAII
DEPARTMENT OF TRANSPORTATION
HIGHWAYS DIVISION

WINDWARD
EXISTING SUPPORT STRUCTURES
POST MODIFICATIONS

H-3 FINISH (UNIT II)
FAIP NO. I-H3-1(75), UNIT II
LEEWARD SECTION

SCALE: AS SHOWN DATE: OCTOBER 1997

SHEET NO. 5S3A OF 3 SHEETS

C.O. 842S-1

ORIGINAL PLAN | SURVEY PLOTTED BY | DRAWN BY | TRACED BY | DESIGNED BY | QUANTITIES BY | CHECKED BY | DATE
NOTE BOOK No.

CAD by D. Burgess, 55-52

Last Saved: J:\H3RF\RFU2\CO\STRUCT\SUP-STR.dwg 10/09/97 at 11:29

FED. ROAD DIST. NO.	STATE	FED. AID PROJ. NO.	FISCAL YEAR	SHEET NO.	TOTAL SHEETS
HAWAII	HAW.	I-H3-1(75), UNIT II	1997	843	1102

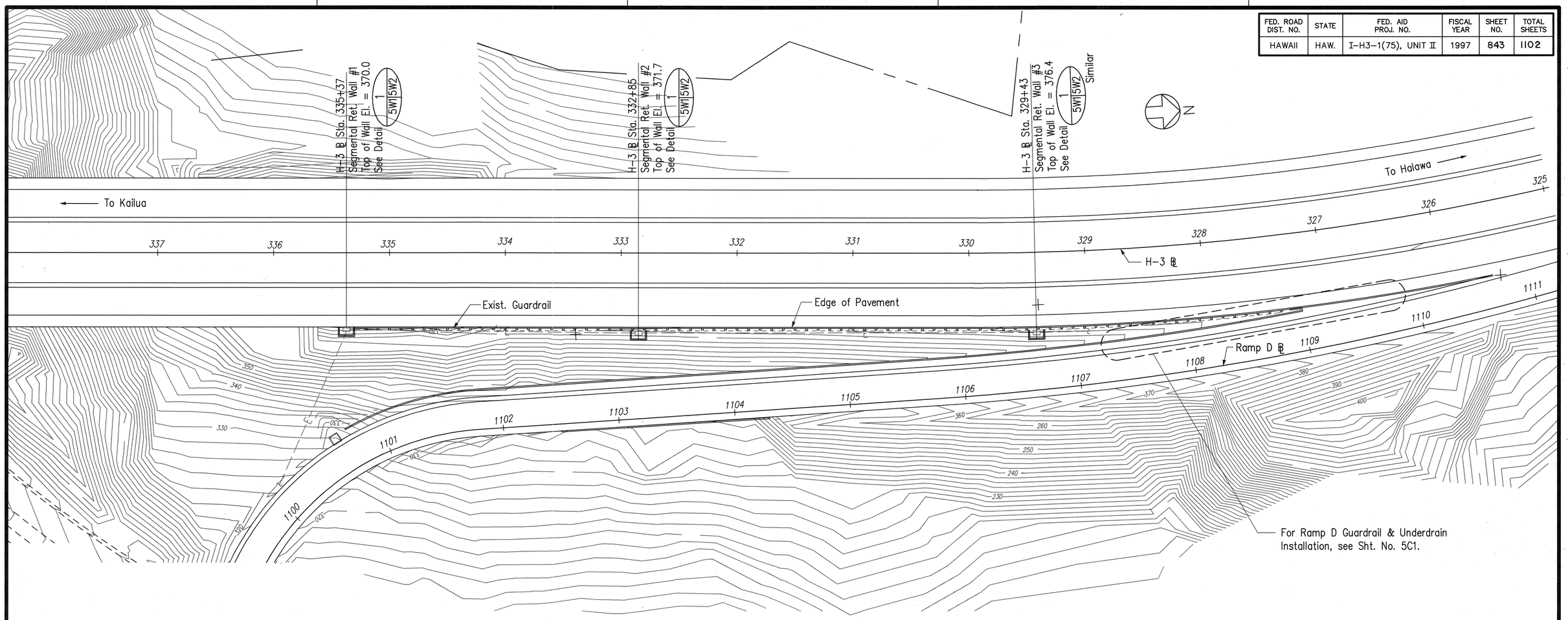

PLAN

Scale: 1" = 40'

NOTES:

1. The location of underground facilities are from existing records with varying degrees of accuracy and are not guaranteed as shown. The Contractor shall exercise extreme caution whenever construction crosses or is in close proximity of underground lines.

2. The Contractor shall comply with the State of Hawaii's Occupational Safety and Health Law (DOSH).

3. The Contractor shall obtain an excavation permit from HECO's Mapping and Records Division located at 820 Ward Avenue, 4th Floor, two weeks prior to starting construction.

4. For verification of HECO's underground lines or for assistance in supporting and protecting these lines, the Contractor shall call HECO's Underground Division at 543-7345 a minimum of 72 hours in advance.

5. When excavation is adjacent to or beneath HECO's existing structures or facilities, the Contractor is responsible for providing adequate shoring of the excavation to prevent slides, cave-ins and settlements, and for protecting existing structures or facilities with beams, struts, or under-pinning, at no additional cost to the State.

6. Any work required to relocate HECO facilities shall be done by HECO and the Contractor shall be responsible for all coordination, at no additional cost to the State.

7. Any damage to HECO's facilities will be reported immediately to HECO's Trouble Dispatcher at 543-7874. This repair work shall be done by HECO or by the Contractor under HECO's supervision at no additional cost to the State.

8. All existing underground facilities shown on these plans or whose approximate locations within the project boundaries have been made known by any reasonable means at any time to the Contractor shall be protected at all times by the Contractor during construction. The Contractor shall be responsible for repair of existing facilities damaged as a result of installation work of the segmental retaining wall at no additional cost to the State.

ORIGINAL PLAN
SURVEY PLOTTED BY
DRAWN BY
TRACED BY
DESIGNED BY
QUANTITIES BY
CHECKED BY
DATE
NOTE BOOK
No.

CAD by D. Burgess, 55-52

STANLEY T. KATSUBA
LICENSED PROFESSIONAL ENGINEER
No. 7254-C
HAWAII, U.S.A.

THIS WORK WAS PREPARED BY ME OR UNDER MY SUPERVISION.

Stanley Katsuba

GERALD Y. SEKI
LICENSED PROFESSIONAL ENGINEER
No. 5635-C
HAWAII, U.S.A.

THIS WORK WAS PREPARED BY ME OR UNDER MY SUPERVISION.

Gerald Y. Seki

STATE OF HAWAII
DEPARTMENT OF TRANSPORTATION
HIGHWAYS DIVISION

WINDWARD
SEGMENTAL - RETAINING WALL
HANDHOLE LOCATION - PLAN

H-3 FINISH (UNIT II)
FAIP NO. I-H3-1(75), UNIT II
LEEWARD SECTION

SCALE: AS SHOWN DATE: JANUARY 1997

SHEET NO. 5W1 OF 2 SHEETS

Last Saved: J:\H3RF\RFU2\WINDWARD\WIN-RW.dwg 02/18/97 at 15:35

FED. ROAD DIST. NO.	STATE	FED. AID PROJ. NO.	FISCAL YEAR	SHEET NO.	TOTAL SHEETS
HAWAII	HAW.	I-H3-1(75), UNIT II	1997	844	1102

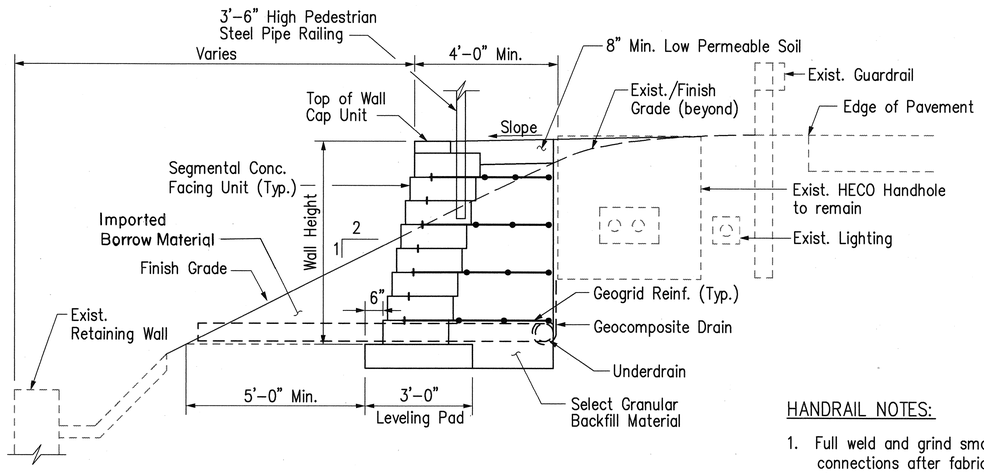

SRW #1 & #2

HANDRAIL NOTES:

1. Full weld and grind smooth all connections after fabrication.
2. Paint pipe rail black with approved metal paint.

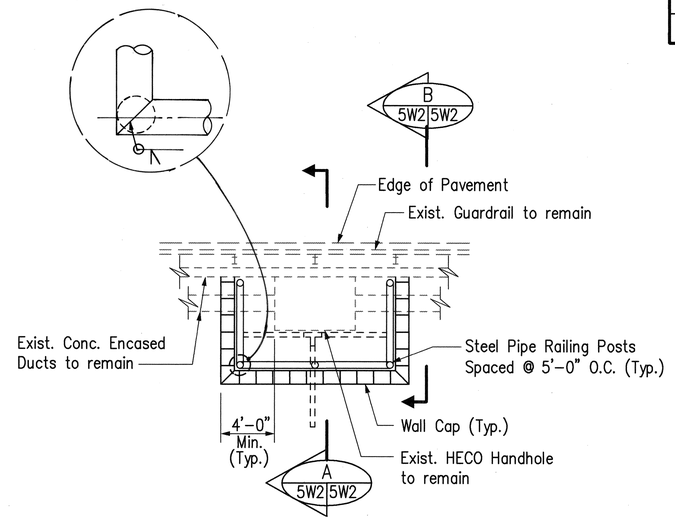

TYPICAL SEGMENTAL RETAINING WALL DETAIL

Scale: 3/16" = 1'-0"

1
5W1 5W2

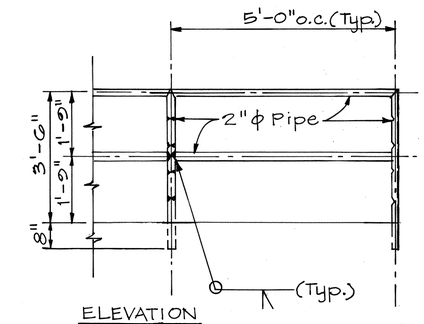

ELEVATION

SEGMENTAL WALL PIPE RAILING DETAIL

N.T.S.

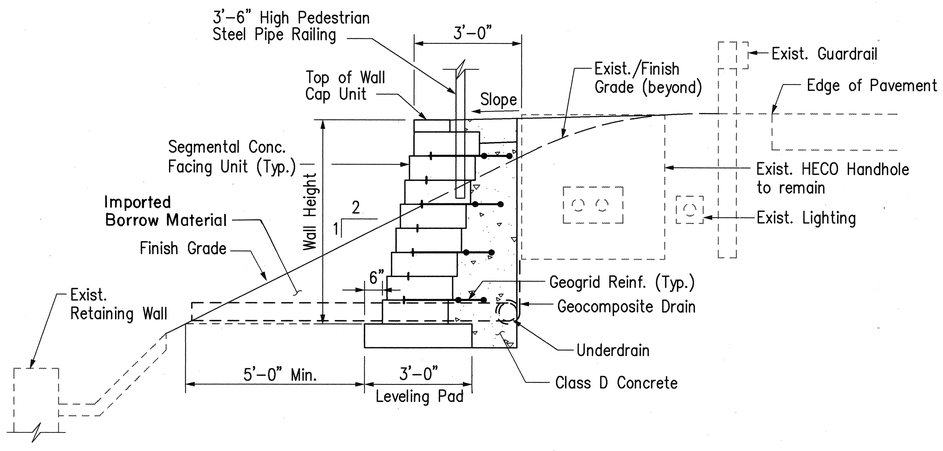

SRW #3

SECTION A

Scale: 1/2" = 1'-0"

5W2 5W2

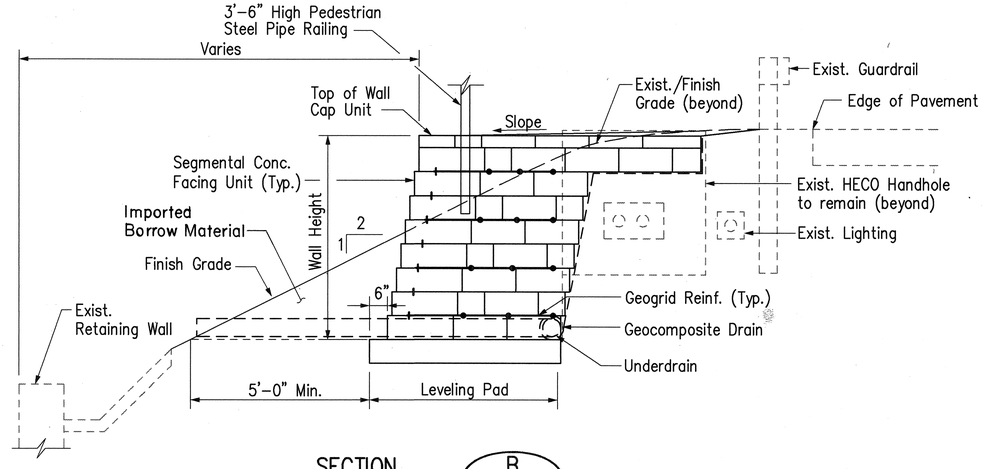

SECTION B

Scale: 1/2" = 1'-0"

5W2 5W2

4/21/97	Revised Detail & Sections
Date	Revision

STATE OF HAWAII
DEPARTMENT OF TRANSPORTATION
HIGHWAYS DIVISION

WINDWARD

SEGMENTAL – RETAINING WALL
HANDHOLE LOCATION – DETAILS

H-3 FINISH (UNIT II)
FAIP NO. I-H3-1(75), UNIT II
LEEWARD SECTION

SCALE: AS SHOWN DATE: JANUARY 1997

STANLEY T. KATSURA LICENSED PROFESSIONAL ENGINEER No. 7254-C HAWAII, U.S.A.

THIS WORK WAS PREPARED BY ME OR UNDER MY SUPERVISION.

GERALD Y. SEKI LICENSED PROFESSIONAL ENGINEER No. 5635-C HAWAII, U.S.A.

THIS WORK WAS PREPARED BY ME OR UNDER MY SUPERVISION.

SHEET NO. 5W2 OF 2 SHEETS

ADD. 844

ORIGINAL PLAN | SURVEY PLOTTED BY | DRAWN BY | TRACED BY | DESIGNED BY | QUANTITIES BY | CHECKED BY | DATE
NOTE BOOK No.

CAD by J. Mimura, 55-52

Last Saved: J:\H3RF\RFU2\WNDWARD\WN-RW2.dwg 04/17/97 at 15:13

FED. ROAD DIST. NO.	STATE	FED. AID PROJ. NO.	FISCAL YEAR	SHEET NO.	TOTAL SHEETS
HAWAII	HAW.	I-H3-1(75), UNIT II	1997	ADD. 844S-1	1102

SIGN LOCATIONS – OUTBOUND	
STATION	SIGN
264+26 (LT)	R8-3-A*
267+91 (RT)	R2-5b(45)-A
267+91 (LT)	R2-5b(45)-A*
271+77 (RT)	R2-1(45)-A
271+77 (LT)	R2-1(45)-A*
274+62 (LT)	R8-4-A*
288+49 (RT)	W7-1+
288+49 (LT)	W7-1*+
292+17 (RT)	M1-10**+
294+03 (RT)	1M-1(1)+, IM3-2+
299+57 (RT)	R2-1(45)-A
303+37 (RT)	W7-4B**+
316+00 (RT)	D10-4*+
318+92 (RT)	R2-1(45)-A+
328+95 (RT)	R2-1(45)-A+

NOTES:

1) SIGNS PER STATE STANDARD PLANS TE-04. TE-05, TE-06, TE-13, AND TE-18.
2) ALL SIGNS SHALL BE FURNISHED BY THE CONTRACTOR UNLESS OTHERWISE NOTED. + INDICATES SIGNS TO BE FURNISHED BY THE STATE. SIGNS FURNISHED BY THE STATE SHALL BE AVAILABLE TO THE CONTRACTOR AT THE STATE DOT KANEOHE BASEYARD.
3) SIGNS SHALL BE ATTACHED TO LIGHT OR VERTICAL POLES PER STATE STANDARD PLAN TE-01, UNLESS OTHERWISE NOTED.
4) * INDICATES SIGN TO BE MOUNTED ON CONCRETE PARAPET. SEE DETAIL SHEET 1P76.
5) ** SEE DETAIL THIS SHEET.

SIGN LOCATIONS – INBOUND	
STATION	SIGN
264+49 (RT)	R8-3a-A*
265+35 (LT)	R5-1-A
265+35 (RT)	R5-1-A*
272+85 (LT)	R2-1(55)-A
279+46 (LT)	R8-4-A
291+67 (LT)	M1-10**+
295+54 (LT)	R8-4-A
296+54 (RT)	R4-3-A*
297+57 (LT)	R2-1(45)-A
310+11 (LT)	R8-4-A+
315+97 (LT)	D10-4+
319+95 (RT)	R4-3-A*+
319+95 (LT)	R2-1(45)-A+
330+83 (LT)	W4-2(R)-A*+

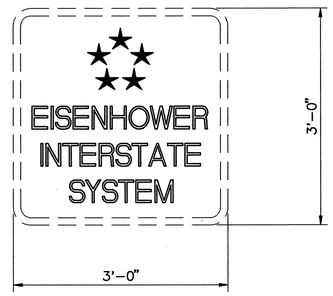

M1-10 SIGN DETAIL

SCALE: 1"=1'-0"

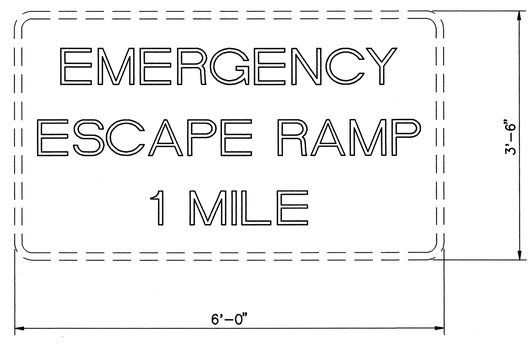

W7-4B SIGN DETAIL

SCALE: 1"=1'-0"

RICHARD T. HARADA
LICENSED PROFESSIONAL ENGINEER
NO. 6624-C
HAWAII, U.S.A.

THIS WORK WAS PREPARED BY ME OR UNDER MY SUPERVISION

Richard T. Harada

4/21/97	Added Tables and Details
DATE	REVISION

STATE OF HAWAII
DEPARTMENT OF TRANSPORTATION
HIGHWAYS DIVISION

SIGNING PLAN
INTERSTATE ROUTE H-3
HAIKU APPROACH

H-3 FINISH (UNIT II)
FAIP NO. I-H3-1(75), UNIT II
LEEWARD SECTION

SCALE: AS NOTED DATE: APRIL 1997

SHEET No. 5P1 OF 1 SHEETS

ADD. 844S-1

SURVEY PLOTTED BY	DATE
DRAWN BY	" "
TRACED BY	" "
DESIGNED BY	" "
QUANTITIES BY	
CHECKED BY	
ORIGINAL PLAN	
NOTEBOOK No.	

(DAVIS) DWG\2485-1(SP1
April 17, 1997 8:00AM