FED. ROAD DIST. NO.	STATE	FED. AID PROJ. NO.	FISCAL YEAR	SHEET NO.	TOTAL SHEETS
HAWAII	HAW.	I-H3-1(75), UNIT II	1997	777	1102

CURVE	RADIUS	LENGTH	TANGENT	CHORD	DELTA	COORDINATES OF POINT OF INTERSECTION OF TANGENTS
H3-1	1537.00'	645.22'	327.43'	640.49'	24°03'08.0"	N 74842.46 E 526860.22

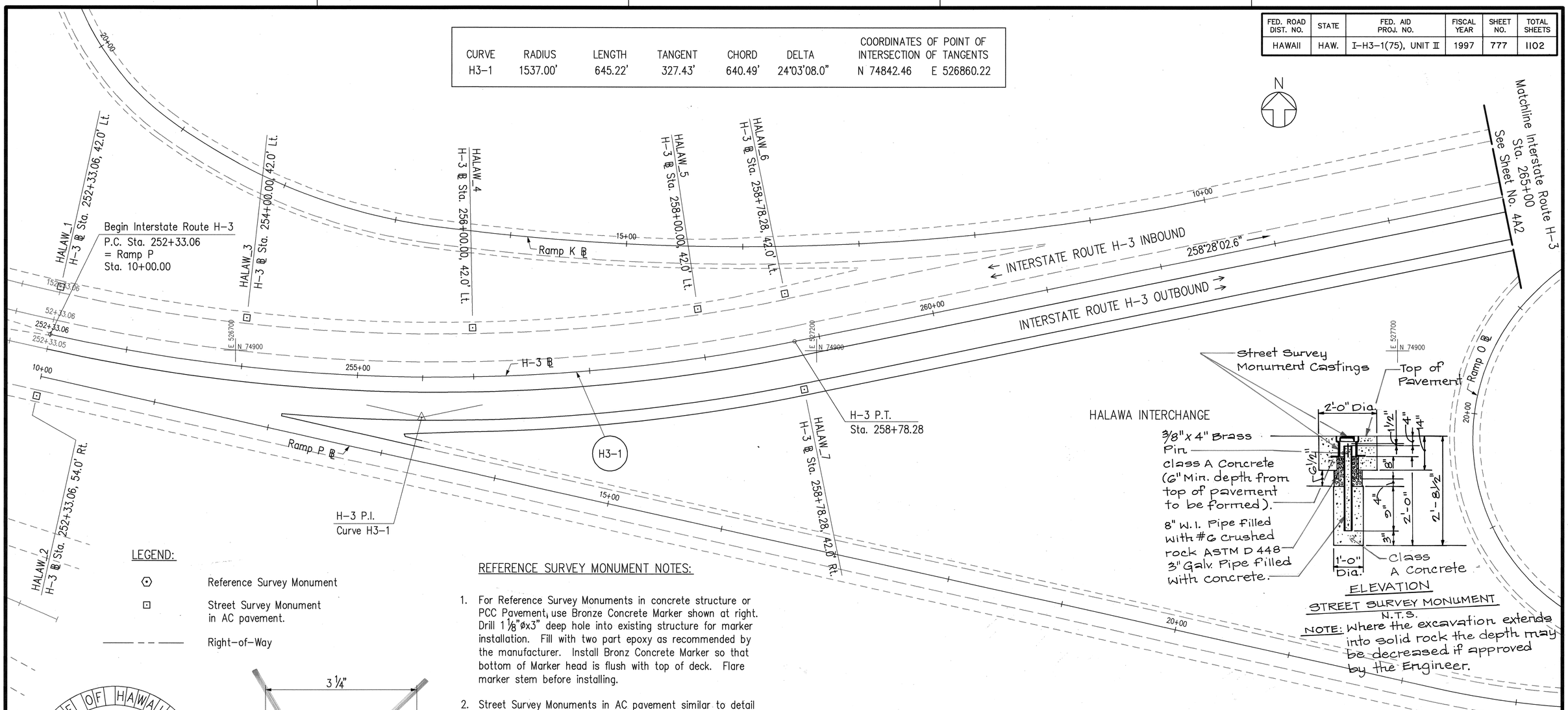

HALAWA INTERCHANGE

ELEVATION

STREET SURVEY MONUMENT
N.T.S.

NOTE: Where the excavation extends into solid rock the depth may be decreased if approved by the Engineer.

LEGEND:

- Reference Survey Monument
- Street Survey Monument in AC pavement.
- Right-of-Way

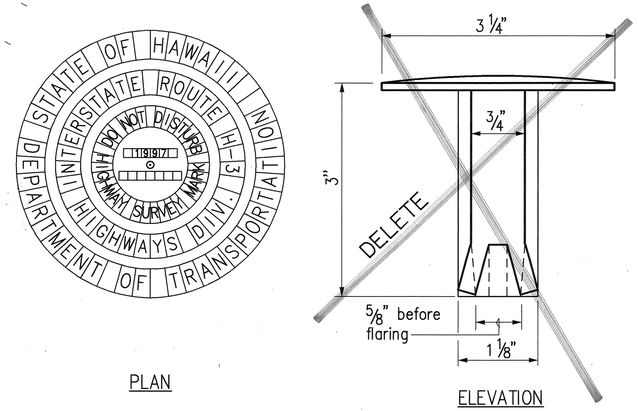

PLAN

ELEVATION

BRONZE CONCRETE MARKER
N.T.S.

REFERENCE SURVEY MONUMENT NOTES:

1. For Reference Survey Monuments in concrete structure or PCC Pavement, use Bronze Concrete Marker shown at right. Drill 1⅛"øx3" deep hole into existing structure for marker installation. Fill with two part epoxy as recommended by the manufacturer. Install Bronz Concrete Marker so that bottom of Marker head is flush with top of deck. Flare marker stem before installing.
2. Street Survey Monuments in AC pavement similar to detail on Standard Plan D-7 except Bronze Concrete Marker shown at right shall be used in lieu of brass pin. Set marker flush with top of 3" I.D. concrete filled galvanized pipe. Flare marker stem before installing.
3. Coordinates are based on Salt Lake Trig. Station.
4. Inscribe Reference Survey Monuments with labeling shown on monument call-out (e.g. HALAW_1;"_ " represents a blank space). Labeling shall be placed in the seven spaces below "1997".
5. Installation of Survey Monuments between H-3 OB Sta. 252+33.06 to 266+18.86 to be scheduled after completion of pavement work. See Section Halawa Interchange, Roadway Construction, Interstate Route H-3 for pavement work.
6. The Contractor shall complete all survey monument installation prior to the opening date of Interstate Route H-3 to public traffic.
7. The Contractor shall be responsible for staking out the Survey Monument locations.

FENCING NOTES:

1. All fencing shall be 6 ft. Chain Link Fence with Toprail and Concrete Footing. Chain Link Gate shall be 6 ft. high and 4 ft. wide.
2. Gate locations shown hereon are approximate and may be adjusted by the Engineer at time of construction to accommodate field conditions and/or maintenance requirements.
3. The Contractor shall complete installation of fencing prior to the opening date of Interstate Route H-3 to public traffic.

RANDALL M. URASAKI
LICENSED PROFESSIONAL ENGINEER
No. 7269-C
HAWAII, U.S.A.

THIS WORK WAS PREPARED BY ME OR UNDER MY SUPERVISION.

STATE OF HAWAII
DEPARTMENT OF TRANSPORTATION
HIGHWAYS DIVISION

NORTH HALAWA VALLEY
ALIGNMENT, FENCING
& SURVEY MONUMENTS

H-3 FINISH (UNIT II)
FAIP NO. I-H3-1(75), UNIT II
LEEWARD SECTION

SCALE: 1" = 40' DATE: JANUARY 1997

SHEET NO. 4A1 OF 19 SHEETS

ORIGINAL PLAN | SURVEY PLOTTED BY | DRAWN BY | TRACED BY | DESIGNED BY | QUANTITIES BY | CHECKED BY | DATE
NOTE BOOK No.

CAD by J. Mimura, 55-52

Last Saved: J:\H3RF\RFU2\ALIGN\H3ALI-01.dwg 02/12/97 at 11:53

777

FED. ROAD DIST. NO.	STATE	FED. AID PROJ. NO.	FISCAL YEAR	SHEET NO.	TOTAL SHEETS
HAWAII	HAW.	I-H3-1(75), UNIT II	1997	778	1102

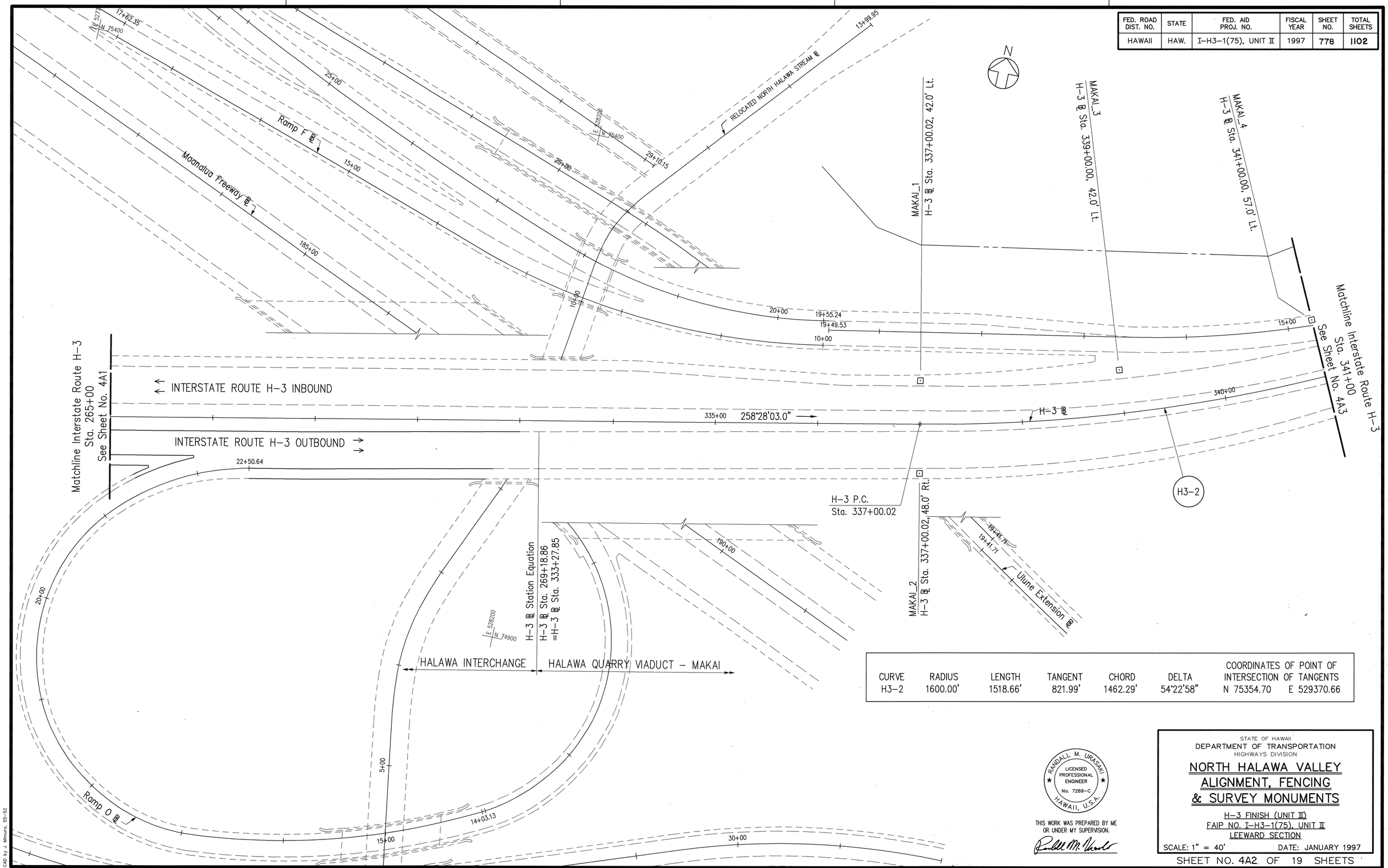

CURVE	RADIUS	LENGTH	TANGENT	CHORD	DELTA	COORDINATES OF POINT OF INTERSECTION OF TANGENTS
H3-2	1600.00'	1518.66'	821.99'	1462.29'	54°22'58"	N 75354.70 E 529370.66

RANDALL M. URASAKI
LICENSED PROFESSIONAL ENGINEER
No. 7269-C
HAWAII, U.S.A.

THIS WORK WAS PREPARED BY ME OR UNDER MY SUPERVISION.

STATE OF HAWAII
DEPARTMENT OF TRANSPORTATION
HIGHWAYS DIVISION

NORTH HALAWA VALLEY ALIGNMENT, FENCING & SURVEY MONUMENTS

H-3 FINISH (UNIT II)
FAIP NO. I-H3-1(75), UNIT II
LEEWARD SECTION

SCALE: 1" = 40' DATE: JANUARY 1997

SHEET NO. 4A2 OF 19 SHEETS

778

ORIGINAL PLAN
SURVEY PLOTTED BY
DRAWN BY
TRACED BY
DESIGNED BY
QUANTITIES BY
CHECKED BY
DATE
NOTE BOOK No.

CAD by J. Mimura, 55-52

Last Saved: J:\H3RF\RFU2\ALIGN\H3ALI-02.dwg 02/12/97 at 10:39

FED. ROAD DIST. NO.	STATE	FED. AID PROJ. NO.	FISCAL YEAR	SHEET NO.	TOTAL SHEETS
HAWAII	HAW.	I-H3-1(75), UNIT II	1997	779	1102

CURVE	RADIUS	LENGTH	TANGENT	CHORD	DELTA	COORDINATES OF POINT OF INTERSECTION OF TANGENTS
H3-2	1600.00'	1518.66'	821.99'	1462.29'	54°22'58"	N 75354.70 E 529370.66

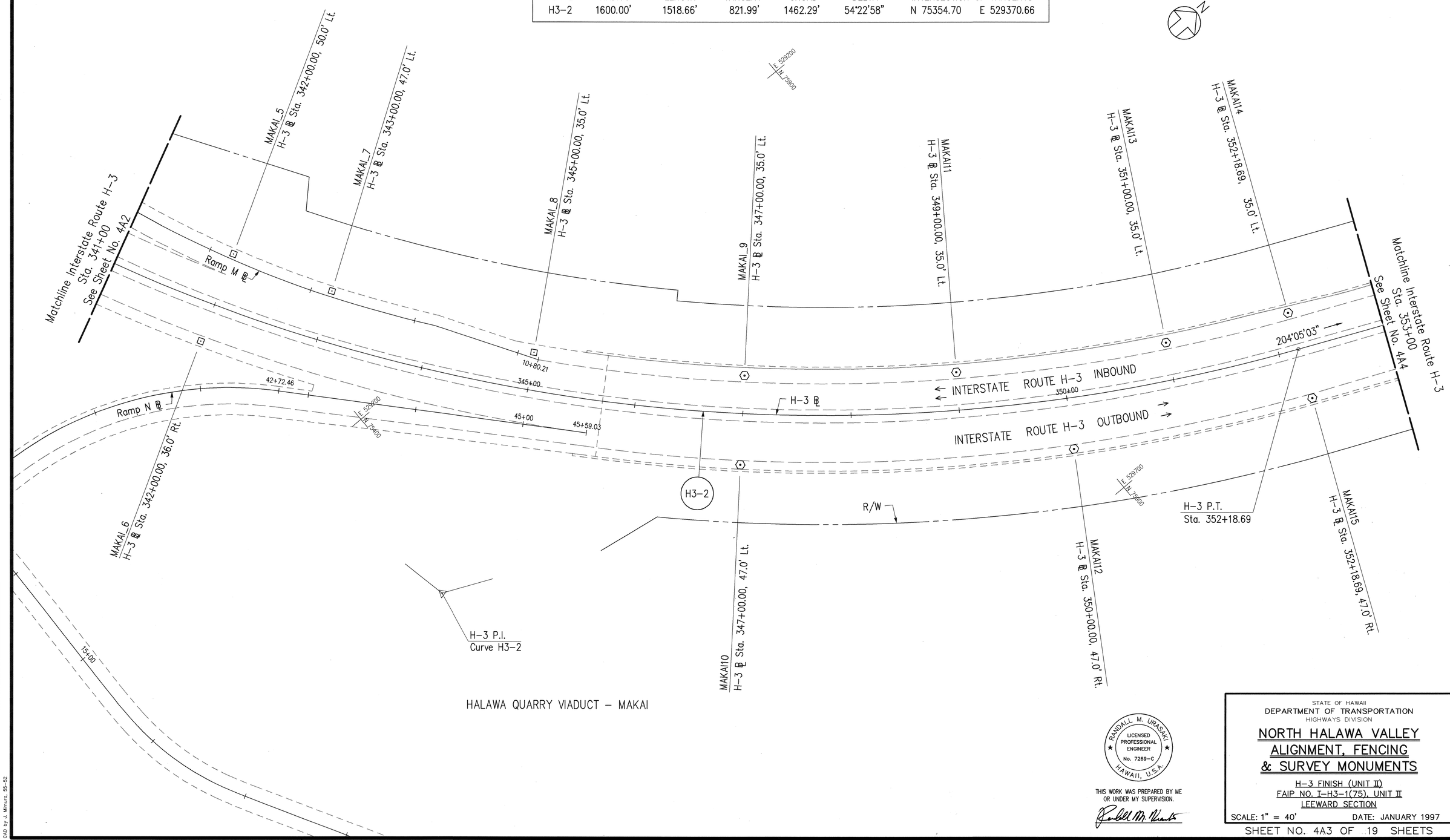

ORIGINAL PLAN	SURVEY PLOTTED BY	DATE
	DRAWN BY	"
NOTE BOOK	TRACED BY	"
	DESIGNED BY	"
	QUANTITIES BY	"
No.	CHECKED BY	"

CAD by J. Mimura, 55-52

Last Saved: J:\H3RF\RFU2\ALIGN\H3ALI-03.dwg 02/12/97 at 11:50

RANDALL M. URASAKI
LICENSED PROFESSIONAL ENGINEER
No. 7269-C
HAWAII, U.S.A.

THIS WORK WAS PREPARED BY ME OR UNDER MY SUPERVISION.

STATE OF HAWAII
DEPARTMENT OF TRANSPORTATION
HIGHWAYS DIVISION

NORTH HALAWA VALLEY ALIGNMENT, FENCING & SURVEY MONUMENTS

H-3 FINISH (UNIT II)
FAIP NO. I-H3-1(75), UNIT II
LEEWARD SECTION

SCALE: 1" = 40' DATE: JANUARY 1997

SHEET NO. 4A3 OF 19 SHEETS

FED. ROAD DIST. NO.	STATE	FED. AID PROJ. NO.	FISCAL YEAR	SHEET NO.	TOTAL SHEETS
HAWAII	HAW.	I-H3-1(75), UNIT II	1997	780	1102

CURVE	RADIUS	LENGTH	TANGENT	CHORD	DELTA	COORDINATES OF POINT OF INTERSECTION OF TANGENTS
H3-3	2800.00'	1701.46'	877.91'	1675.40'	34°49'00"	N 78003.36 E 530554.59

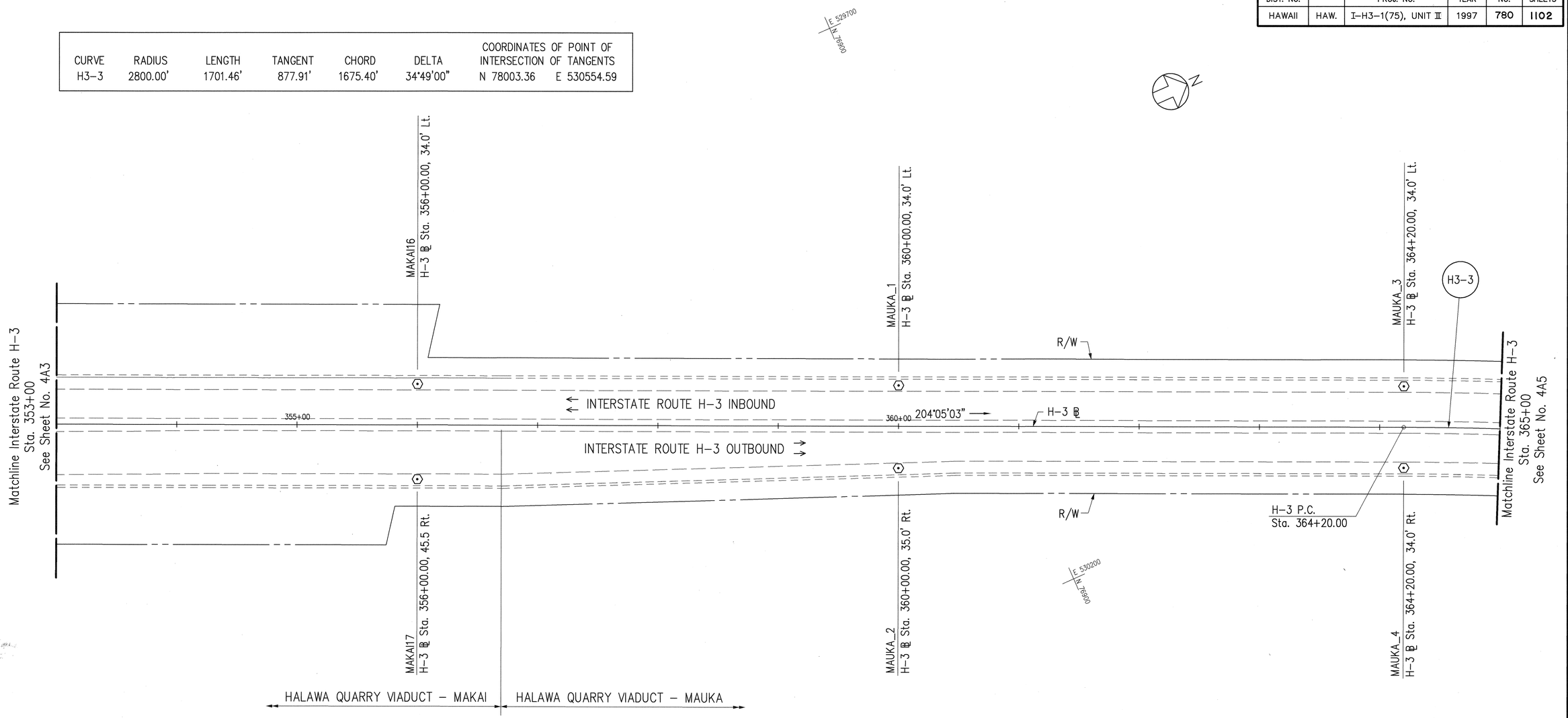

ORIGINAL PLAN	SURVEY PLOTTED BY	DATE
	DRAWN BY	"
NOTE BOOK	TRACED BY	"
	DESIGNED BY	"
	QUANTITIES BY	"
No.	CHECKED BY	"

CAD by J. Mimuro, 55-52

Last Saved: J:\H3RF\RFU2\ALIGN\H3ALI-04.dwg 02/12/97 at 10:42

RANDALL M. URASAKI
LICENSED PROFESSIONAL ENGINEER
No. 7269-C
HAWAII, U.S.A.

THIS WORK WAS PREPARED BY ME OR UNDER MY SUPERVISION.

STATE OF HAWAII
DEPARTMENT OF TRANSPORTATION
HIGHWAYS DIVISION

NORTH HALAWA VALLEY ALIGNMENT, FENCING & SURVEY MONUMENTS

H-3 FINISH (UNIT II)
FAIP NO. I-H3-1(75), UNIT II
LEEWARD SECTION

SCALE: 1" = 40' DATE: JANUARY 1997

SHEET NO. 4A4 OF 19 SHEETS

FED. ROAD DIST. NO.	STATE	FED. AID PROJ. NO.	FISCAL YEAR	SHEET NO.	TOTAL SHEETS
HAWAII	HAW.	I-H3-1(75), UNIT II	1997	781	1102

CURVE	RADIUS	LENGTH	TANGENT	CHORD	DELTA	COORDINATES OF POINT OF INTERSECTION OF TANGENTS
H3-3	2800.00'	1701.46'	877.91'	1675.40'	34°49'00"	N 78003.36 E 530554.59

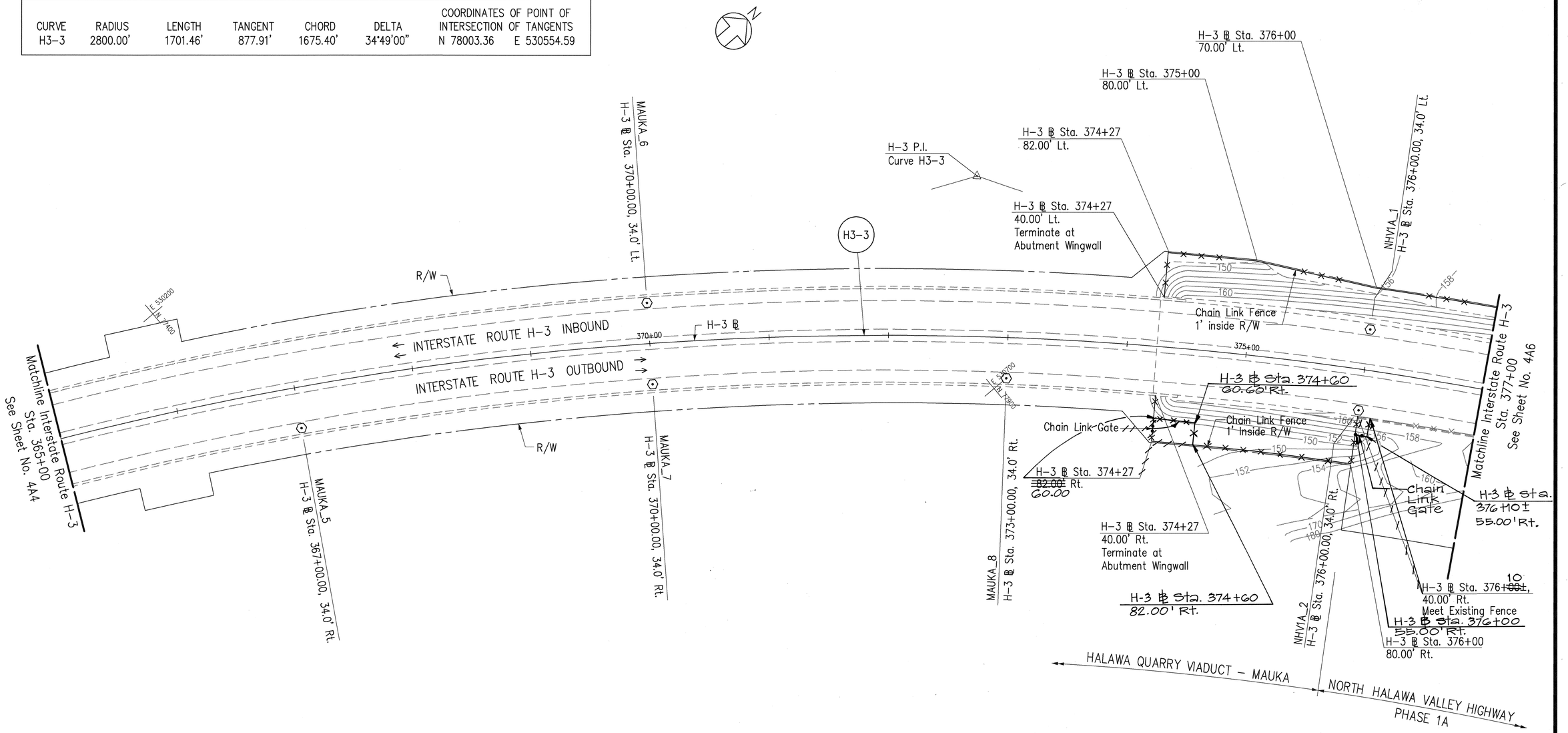

ORIGINAL PLAN	SURVEY PLOTTED BY	DATE
	DRAWN BY	"
NOTE BOOK	TRACED BY	"
	DESIGNED BY	"
	QUANTITIES BY	"
No.	CHECKED BY	"

CAD by J. Mimura, 55-52

Last Saved: J:\H3RF\RFU2\ALIGN\H3ALI-05.dwg 02/12/97 at 10:50

RANDALL M. URASAKI
LICENSED PROFESSIONAL ENGINEER
No. 7269-C
HAWAII, U.S.A.

THIS WORK WAS PREPARED BY ME OR UNDER MY SUPERVISION.

STATE OF HAWAII
DEPARTMENT OF TRANSPORTATION
HIGHWAYS DIVISION

NORTH HALAWA VALLEY ALIGNMENT, FENCING & SURVEY MONUMENTS

H-3 FINISH (UNIT II)
FAIP NO. I-H3-1(75), UNIT II
LEEWARD SECTION

SCALE: 1" = 40' DATE: JANUARY 1997

SHEET NO. 4A5 OF 19 SHEETS

781

FED. ROAD DIST. NO.	STATE	FED. AID PROJ. NO.	FISCAL YEAR	SHEET NO.	TOTAL SHEETS
HAWAII	HAW.	I-H3-1(75), UNIT II	1997	782	1102

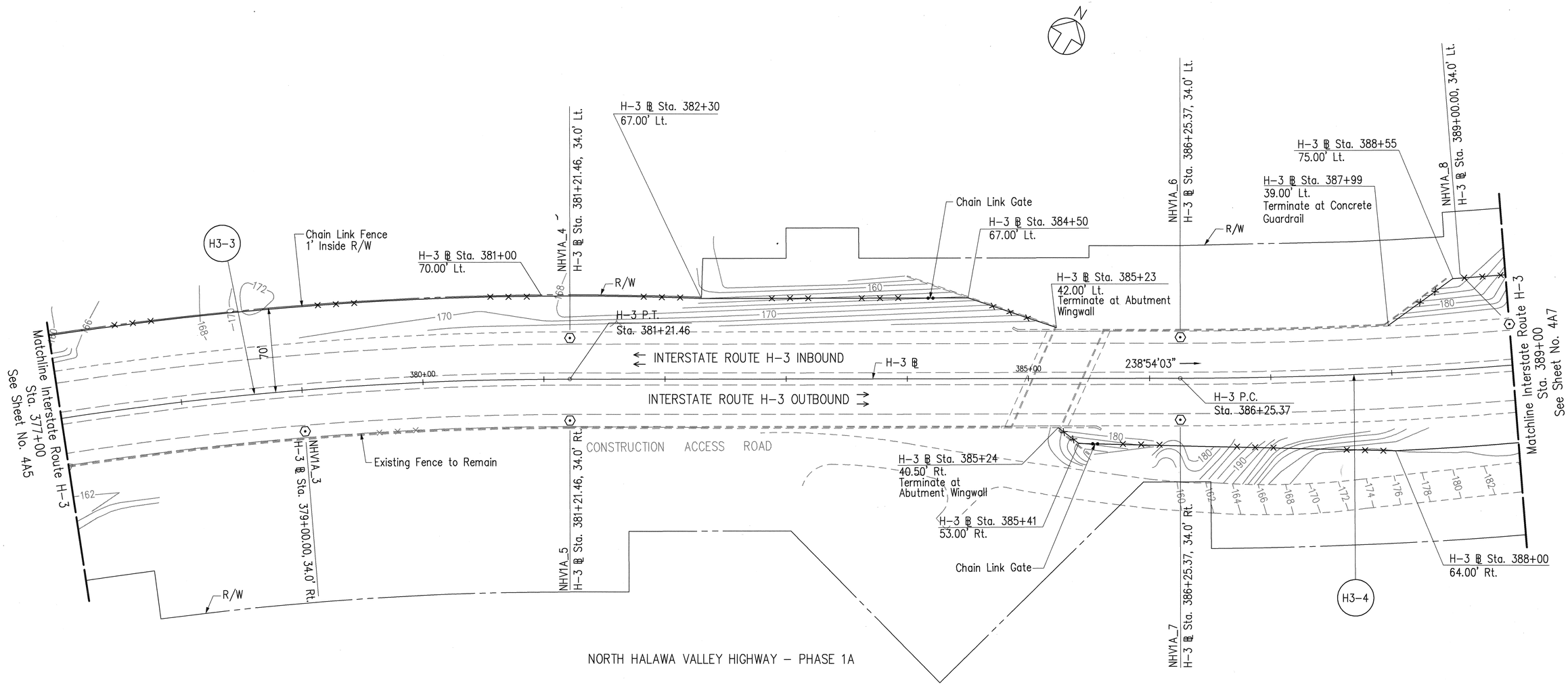

CURVE	RADIUS	LENGTH	TANGENT	CHORD	DELTA	COORDINATES OF POINT OF INTERSECTION OF TANGENTS	
H3-3	2800.00'	1701.46'	877.91'	1675.40'	34°49'00"	N 78003.36	E 530554.59
H3-4	3600.00'	1010.55'	508.62'	1007.24'	16°05'00"	N 78979.81	E 532173.33

ORIGINAL PLAN
SURVEY PLOTTED BY ____ DATE ____
DRAWN BY ____
TRACED BY ____
NOTE BOOK DESIGNED BY ____
QUANTITIES BY ____
No. ____ CHECKED BY ____

CAD by J. Mimura, 55-52

Last Saved: J:\H3RF\RFU2\ALIGN\H3ALI-06.dwg 02/12/97 at 10:57

RANDALL M. URASAKI
LICENSED PROFESSIONAL ENGINEER
No. 7269-C
HAWAII, U.S.A.

THIS WORK WAS PREPARED BY ME OR UNDER MY SUPERVISION.

STATE OF HAWAII
DEPARTMENT OF TRANSPORTATION
HIGHWAYS DIVISION

NORTH HALAWA VALLEY ALIGNMENT, FENCING & SURVEY MONUMENTS

H-3 FINISH (UNIT II)
FAIP NO. I-H3-1(75), UNIT II
LEEWARD SECTION

SCALE: 1" = 40' DATE: JANUARY 1997

SHEET NO. 4A6 OF 19 SHEETS

FED. ROAD DIST. NO.	STATE	FED. AID PROJ. NO.	FISCAL YEAR	SHEET NO.	TOTAL SHEETS
HAWAII	HAW.	I-H3-1(75), UNIT II	1997	783	1102

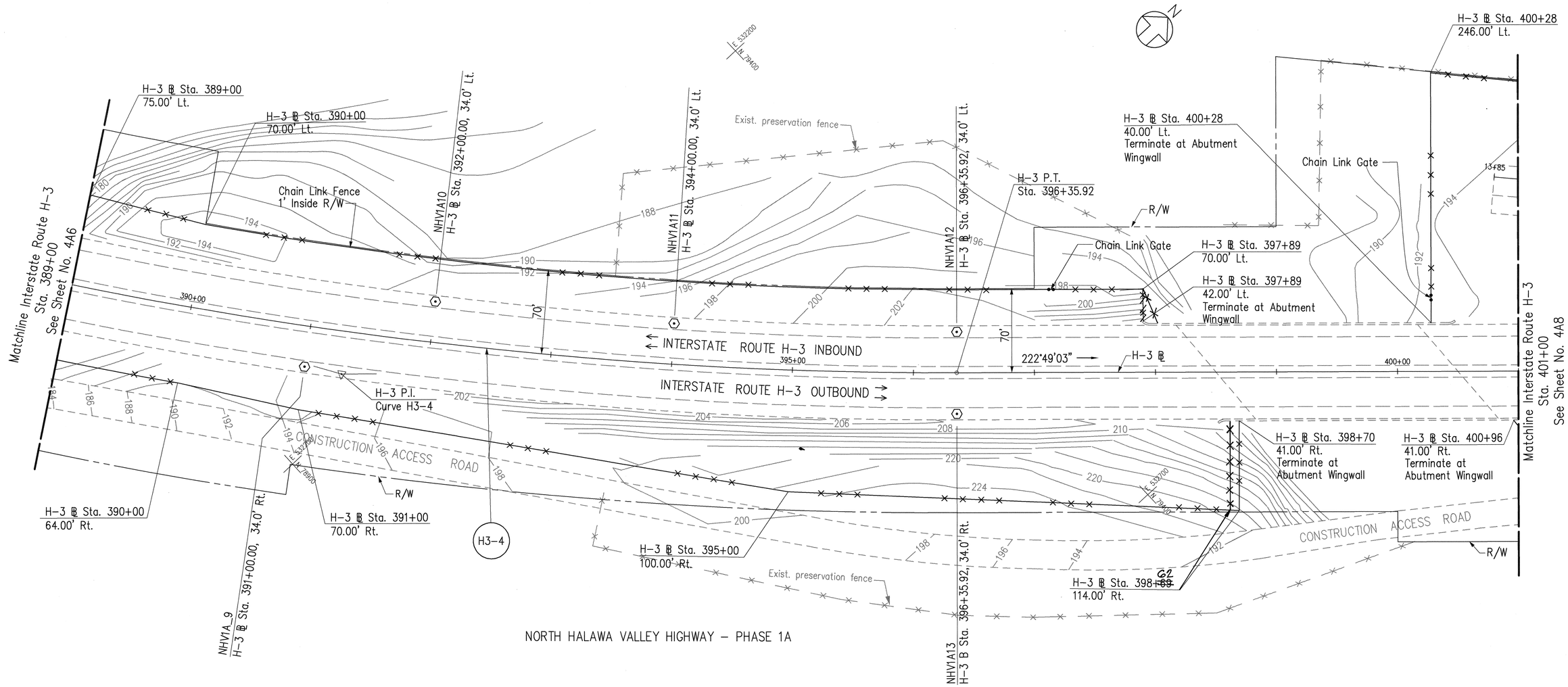

CURVE	RADIUS	LENGTH	TANGENT	CHORD	DELTA	COORDINATES OF POINT OF INTERSECTION OF TANGENTS	
H3-4	3600.00'	1010.55'	508.62'	1007.24'	16°05'00"	N 78979.81	E 532173.33

ORIGINAL PLAN	SURVEY PLOTTED BY	DATE
	DRAWN BY	
	TRACED BY	
NOTE BOOK	DESIGNED BY	
	QUANTITIES BY	
No.	CHECKED BY	

CAD by J. Mimura, 55-52

Last Saved: J:\H3RF\RFU2\ALIGN\H3ALI-07.dwg 02/12/97 at 11:02

RANDALL M. URASAKI
LICENSED PROFESSIONAL ENGINEER
No. 7269-C
HAWAII, U.S.A.

THIS WORK WAS PREPARED BY ME OR UNDER MY SUPERVISION.

STATE OF HAWAII
DEPARTMENT OF TRANSPORTATION
HIGHWAYS DIVISION

NORTH HALAWA VALLEY ALIGNMENT, FENCING & SURVEY MONUMENTS

H-3 FINISH (UNIT II)
FAIP NO. I-H3-1(75), UNIT II
LEEWARD SECTION

SCALE: 1" = 40' DATE: JANUARY 1997

SHEET NO. 4A7 OF 19 SHEETS

FED. ROAD DIST. NO.	STATE	FED. AID PROJ. NO.	FISCAL YEAR	SHEET NO.	TOTAL SHEETS
HAWAII	HAW.	I-H3-1(75), UNIT II	1997	784	1102

Note:
1. In areas where the permanent 6' preservation fence conflicts with the existing 4' preservation fence, the wire strands of the existing fence may be cut to allow for the installation of the 6' fence.

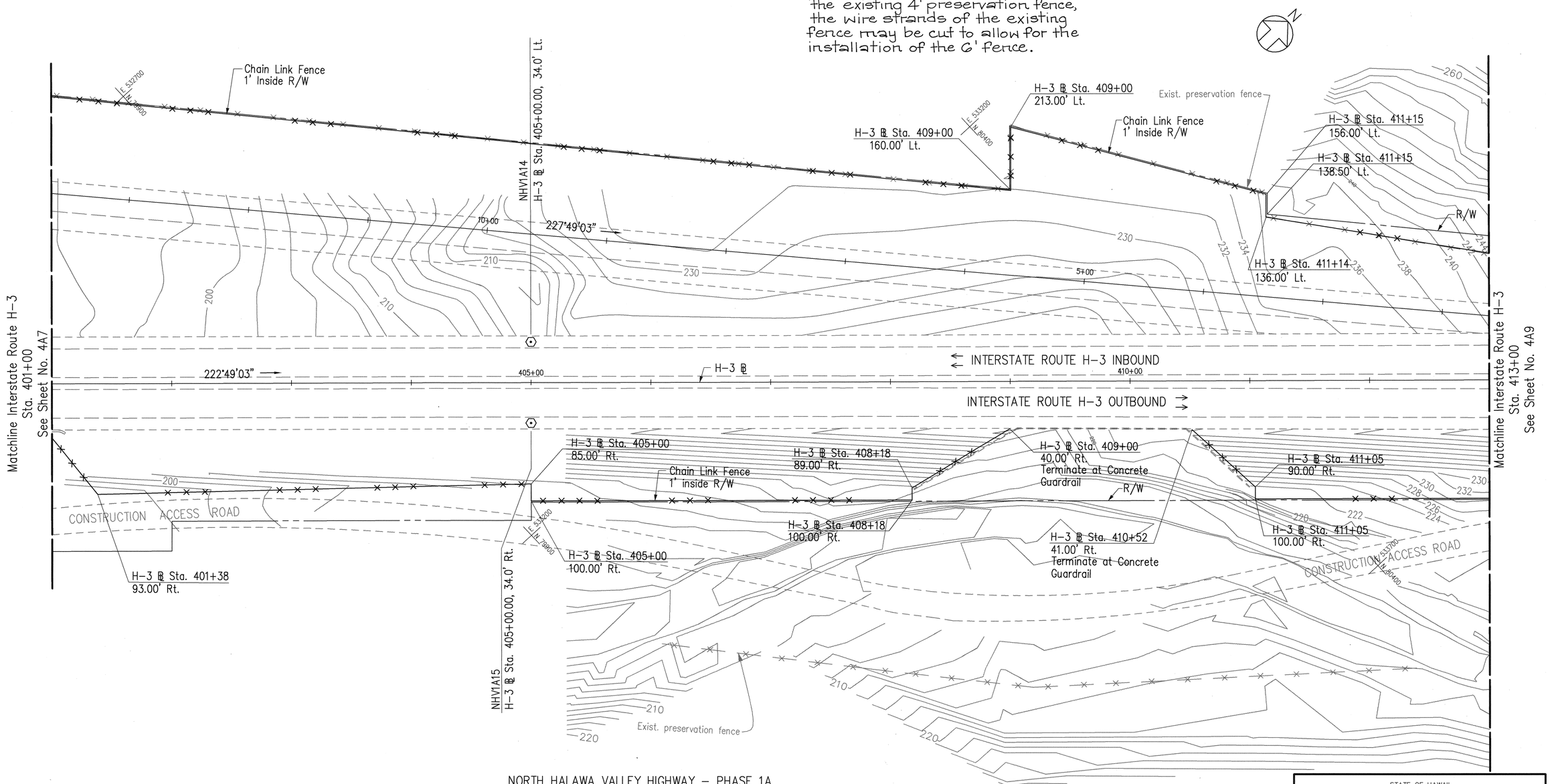

NORTH HALAWA VALLEY HIGHWAY – PHASE 1A

ORIGINAL PLAN	SURVEY PLOTTED BY	DATE
	DRAWN BY	
	TRACED BY	
NOTE BOOK	DESIGNED BY	
	QUANTITIES BY	
No.	CHECKED BY	

CAD by J. Mimura, 55-52

Last Saved: J:\H3RF\RFU2\ALIGN\H3ALI-08.dwg 02/12/97 at 11:31

RANDALL M. URASAKI
LICENSED PROFESSIONAL ENGINEER
No. 7269-C
HAWAII, U.S.A.

THIS WORK WAS PREPARED BY ME OR UNDER MY SUPERVISION.

STATE OF HAWAII
DEPARTMENT OF TRANSPORTATION
HIGHWAYS DIVISION

NORTH HALAWA VALLEY ALIGNMENT, FENCING & SURVEY MONUMENTS

H-3 FINISH (UNIT II)
FAIP NO. I-H3-1(75), UNIT II
LEEWARD SECTION

SCALE: 1" = 40' DATE: JANUARY 1997

SHEET NO. 4A8 OF 19 SHEETS

FED. ROAD DIST. NO.	STATE	FED. AID PROJ. NO.	FISCAL YEAR	SHEET NO.	TOTAL SHEETS
HAWAII	HAW.	I-H3-1(75), UNIT II	1997	785	1102

CURVE	RADIUS	LENGTH	TANGENT	CHORD	DELTA	COORDINATES OF POINT OF INTERSECTION OF TANGENTS
H3-5	4000.00'	570.14'	285.55'	569.66'	08°10'00"	N ~~80928.70~~ 80927.42 E ~~533978.83~~ 533977.94

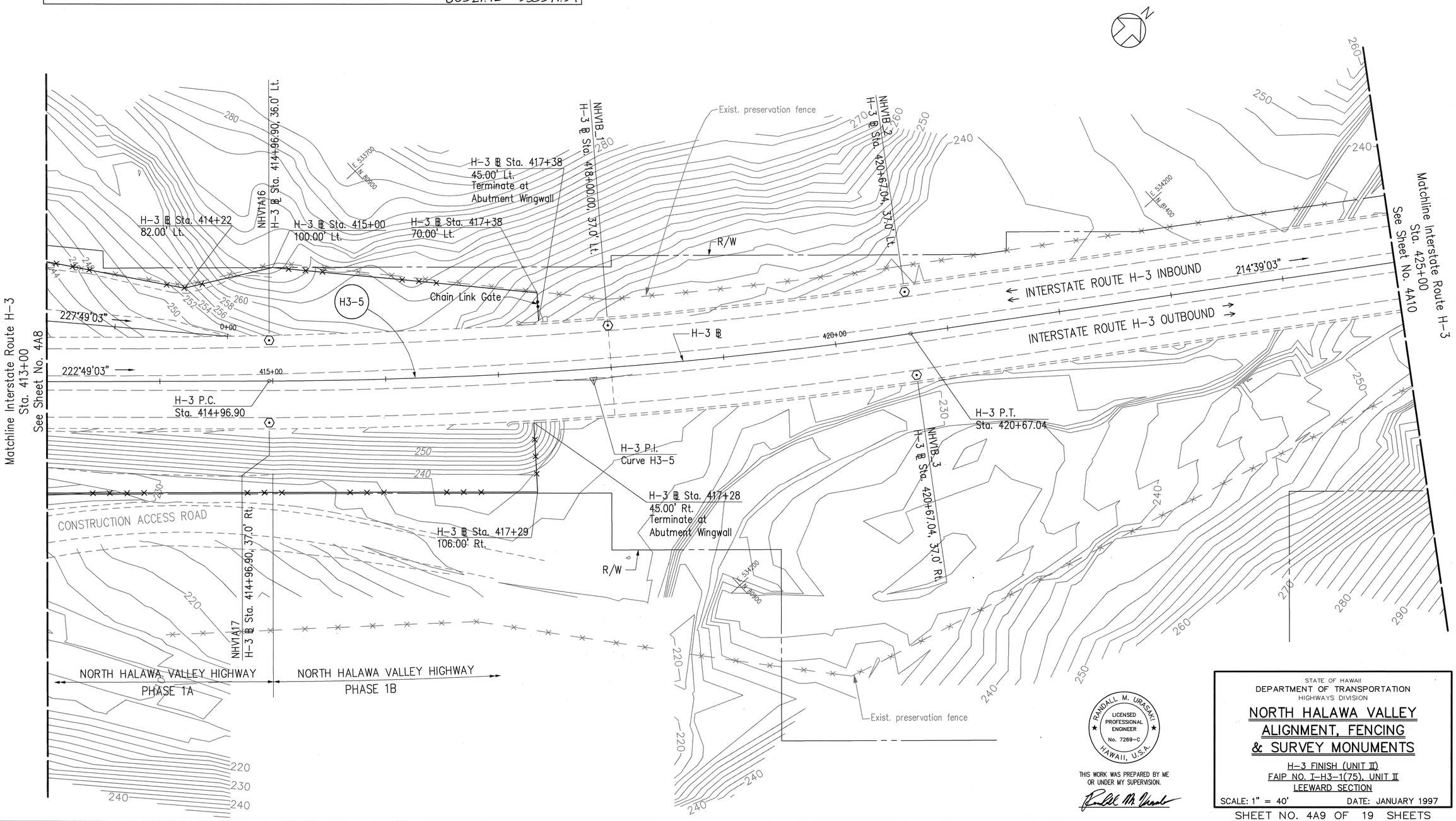

ORIGINAL PLAN	SURVEY PLOTTED BY	DATE
	DRAWN BY	"
	TRACED BY	"
NOTE BOOK	DESIGNED BY	"
	QUANTITIES BY	"
No.	CHECKED BY	"

CAD by J. Mimura, 55-52

Last Saved: J:\H3RF\RFU2\ALIGN\H3ALI-09.dwg 02/12/97 at 11:42

RANDALL M. URASAKI
LICENSED PROFESSIONAL ENGINEER
No. 7269-C
HAWAII, U.S.A.

THIS WORK WAS PREPARED BY ME OR UNDER MY SUPERVISION.

STATE OF HAWAII
DEPARTMENT OF TRANSPORTATION
HIGHWAYS DIVISION

NORTH HALAWA VALLEY ALIGNMENT, FENCING & SURVEY MONUMENTS

H-3 FINISH (UNIT II)
FAIP NO. I-H3-1(75), UNIT II
LEEWARD SECTION

SCALE: 1" = 40' DATE: JANUARY 1997

SHEET NO. 4A9 OF 19 SHEETS

FED. ROAD DIST. NO.	STATE	FED. AID PROJ. NO.	FISCAL YEAR	SHEET NO.	TOTAL SHEETS
HAWAII	HAW.	I-H3-1(75), UNIT II	1997	786	1102

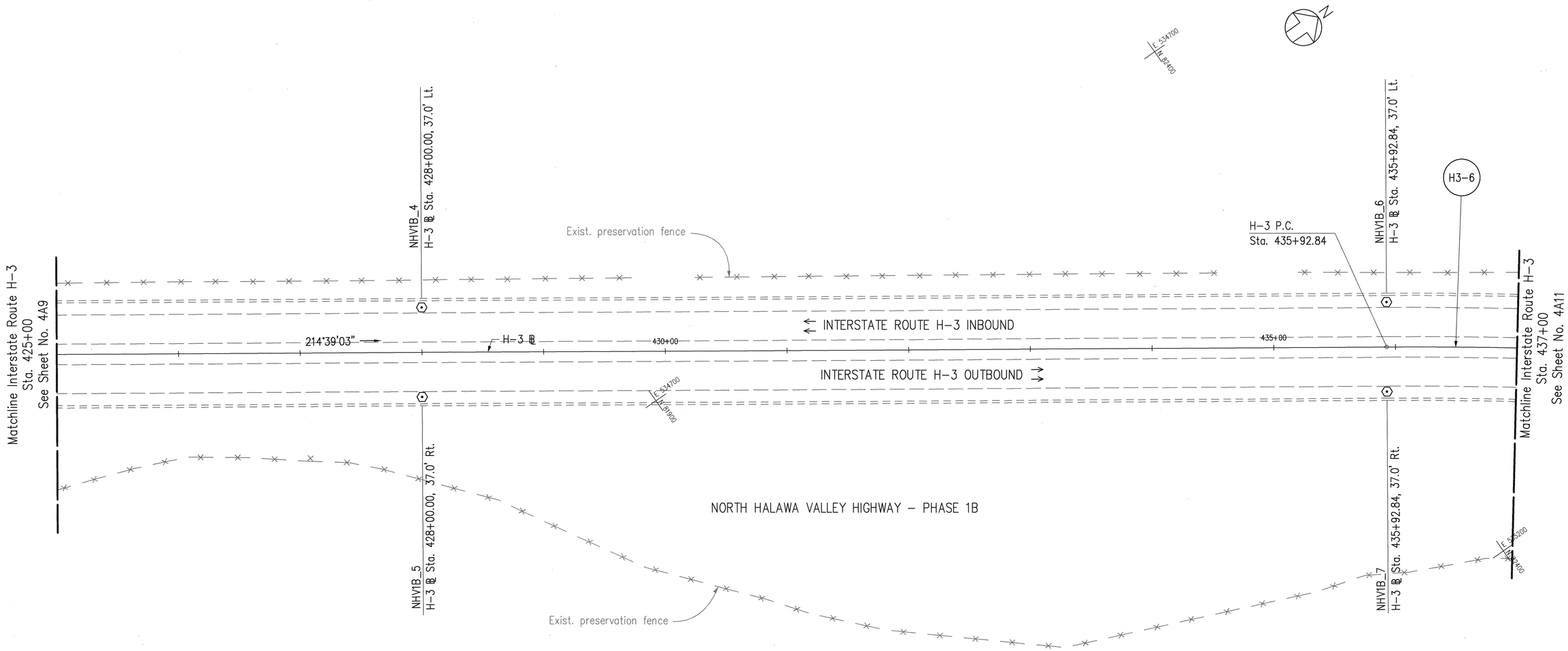

CURVE	RADIUS	LENGTH	TANGENT	CHORD	DELTA	COORDINATES OF POINT OF INTERSECTION OF TANGENTS	
H3-6	3800.00'	1793.29'	913.66'	1776.70'	27°02'20"	N 83169.11	E 535527.32

E 534700
N 81400

E 535200
N 81900

RANDALL M. URASAKI
LICENSED PROFESSIONAL ENGINEER
No. 7269-C
HAWAII, U.S.A.

THIS WORK WAS PREPARED BY ME OR UNDER MY SUPERVISION.

STATE OF HAWAII
DEPARTMENT OF TRANSPORTATION
HIGHWAYS DIVISION

NORTH HALAWA VALLEY ALIGNMENT, FENCING & SURVEY MONUMENTS

H-3 FINISH (UNIT II)
FAIP NO. I-H3-1(75), UNIT II
LEEWARD SECTION

SCALE: 1" = 40' DATE: JANUARY 1997

SHEET NO. 4A10 OF 19 SHEETS

ORIGINAL PLAN
SURVEY PLOTTED BY ____ DATE
DRAWN BY ____
TRACED BY ____
DESIGNED BY ____
QUANTITIES BY ____
CHECKED BY ____
NOTE BOOK
No. ____

CAD by J. Mimuro, 55-52

Last Saved: J:\H3RF\RFU2\ALIGN\H3ALI-10.dwg 02/12/97 at 12:03

FED. ROAD DIST. NO.	STATE	FED. AID PROJ. NO.	FISCAL YEAR	SHEET NO.	TOTAL SHEETS
HAWAII	HAW.	I-H3-1(75), UNIT II	1997	787	1102

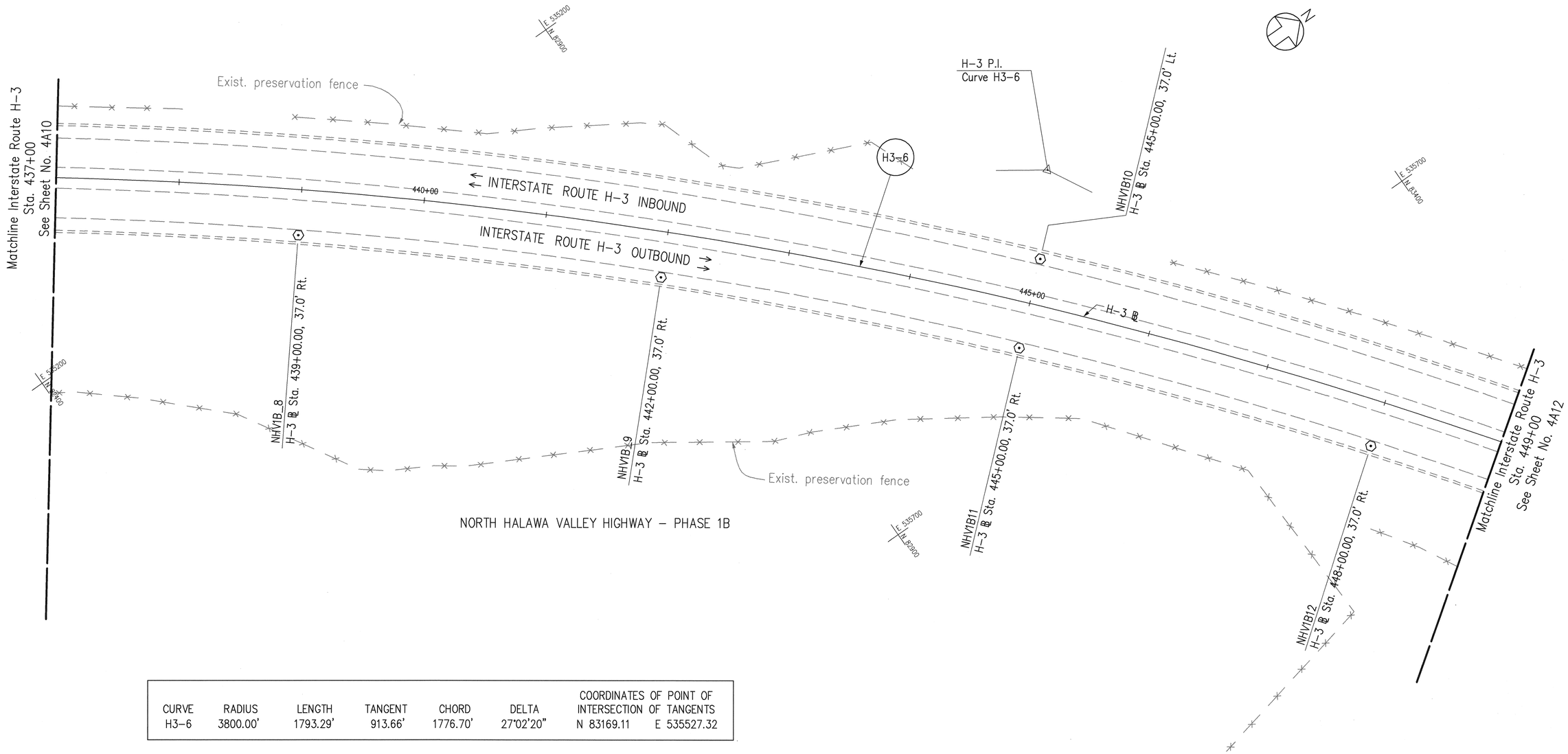

CURVE	RADIUS	LENGTH	TANGENT	CHORD	DELTA	COORDINATES OF POINT OF INTERSECTION OF TANGENTS
H3-6	3800.00'	1793.29'	913.66'	1776.70'	27°02'20"	N 83169.11 E 535527.32

ORIGINAL PLAN
SURVEY PLOTTED BY ____ DATE
DRAWN BY ____
TRACED BY ____
DESIGNED BY ____
QUANTITIES BY ____
CHECKED BY ____
NOTE BOOK ____
No. ____

CAD by J. Mimura, 55-52

Last Saved: J:\H3RF\RFU2\ALIGN\H3ALI-11.dwg 02/12/97 at 12:08

RANDALL M. URASAKI
LICENSED PROFESSIONAL ENGINEER
No. 7269-C
HAWAII, U.S.A.

THIS WORK WAS PREPARED BY ME OR UNDER MY SUPERVISION.

STATE OF HAWAII
DEPARTMENT OF TRANSPORTATION
HIGHWAYS DIVISION

NORTH HALAWA VALLEY ALIGNMENT, FENCING & SURVEY MONUMENTS

H-3 FINISH (UNIT II)
FAIP NO. I-H3-1(75), UNIT II
LEEWARD SECTION

SCALE: 1" = 40' DATE: JANUARY 1997

SHEET NO. 4A11 OF 19 SHEETS

FED. ROAD DIST. NO.	STATE	FED. AID PROJ. NO.	FISCAL YEAR	SHEET NO.	TOTAL SHEETS
HAWAII	HAW.	I-H3-1(75), UNIT II	1997	788	1102

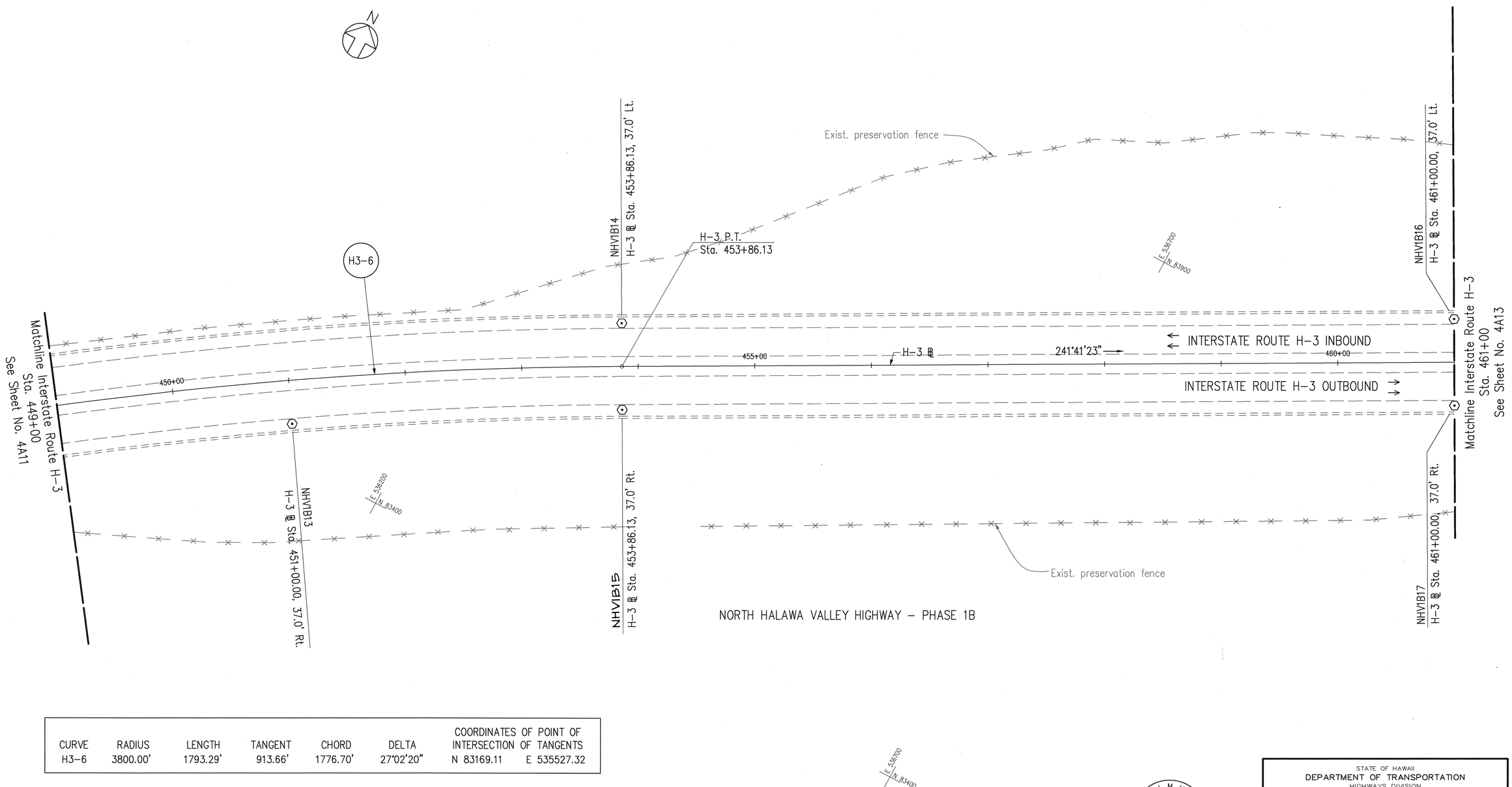

CURVE	RADIUS	LENGTH	TANGENT	CHORD	DELTA	COORDINATES OF POINT OF INTERSECTION OF TANGENTS	
H3-6	3800.00'	1793.29'	913.66'	1776.70'	27°02'20"	N 83169.11	E 535527.32

ORIGINAL PLAN
SURVEY PLOTTED BY ____ DATE
DRAWN BY "
TRACED BY "
DESIGNED BY "
QUANTITIES BY "
CHECKED BY "
NOTE BOOK
No.

CAD by J. Mimuro, 55-52

Last Saved: J:\H3RF\RFU2\ALIGN\H3ALI-12.dwg 02/12/97 at 12:11

RANDALL M. URASAKI
LICENSED PROFESSIONAL ENGINEER
No. 7269-C
HAWAII, U.S.A.

THIS WORK WAS PREPARED BY ME OR UNDER MY SUPERVISION.

STATE OF HAWAII
DEPARTMENT OF TRANSPORTATION
HIGHWAYS DIVISION

NORTH HALAWA VALLEY ALIGNMENT, FENCING & SURVEY MONUMENTS

H-3 FINISH (UNIT II)
FAIP NO. I-H3-1(75), UNIT II
LEEWARD SECTION

SCALE: 1" = 40' DATE: JANUARY 1997

SHEET NO. 4A12 OF 19 SHEETS

FED. ROAD DIST. NO.	STATE	FED. AID PROJ. NO.	FISCAL YEAR	SHEET NO.	TOTAL SHEETS
HAWAII	HAW.	I-H3-1(75), UNIT II	1997	789	1102

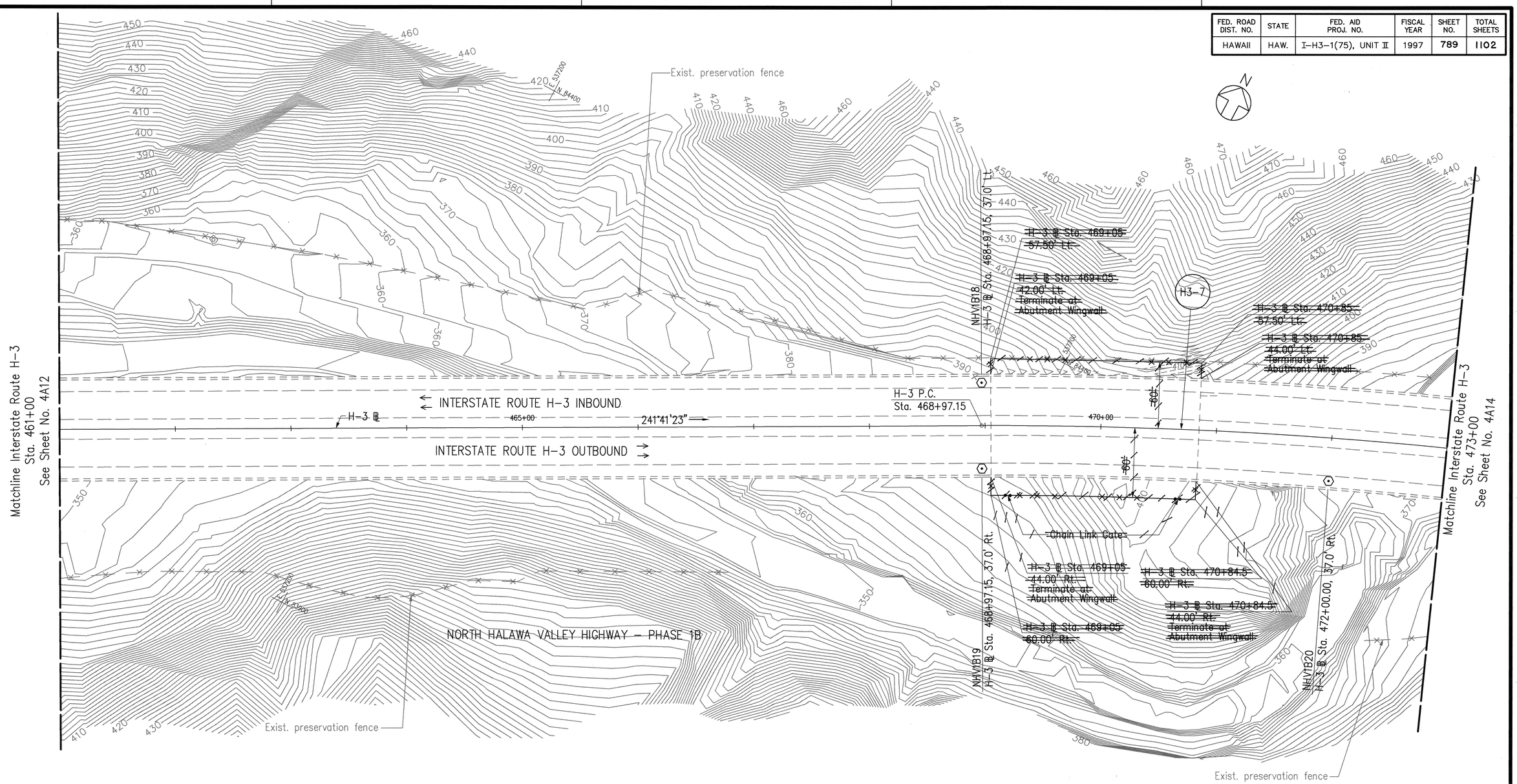

ORIGINAL PLAN	SURVEY PLOTTED BY	DATE
	DRAWN BY	
	TRACED BY	
NOTE BOOK	DESIGNED BY	
	QUANTITIES BY	
	CHECKED BY	
No.		

CAD by J. Mimura, 55-52

Last Saved: J:\H3RF\RFU2\ALIGN\H3ALI-13.dwg 02/12/97 at 12:17

RANDALL M. URASAKI
LICENSED PROFESSIONAL ENGINEER
No. 7269-C
HAWAII, U.S.A.

THIS WORK WAS PREPARED BY ME OR UNDER MY SUPERVISION.

STATE OF HAWAII
DEPARTMENT OF TRANSPORTATION
HIGHWAYS DIVISION

NORTH HALAWA VALLEY ALIGNMENT, FENCING & SURVEY MONUMENTS

H-3 FINISH (UNIT II)
FAIP NO. I-H3-1(75), UNIT II
LEEWARD SECTION

SCALE: 1" = 40' DATE: JANUARY 1997

SHEET NO. 4A13 OF 19 SHEETS

FED. ROAD DIST. NO.	STATE	FED. AID PROJ. NO.	FISCAL YEAR	SHEET NO.	TOTAL SHEETS
HAWAII	HAW.	I-H3-1(75), UNIT II	1997	790	1102

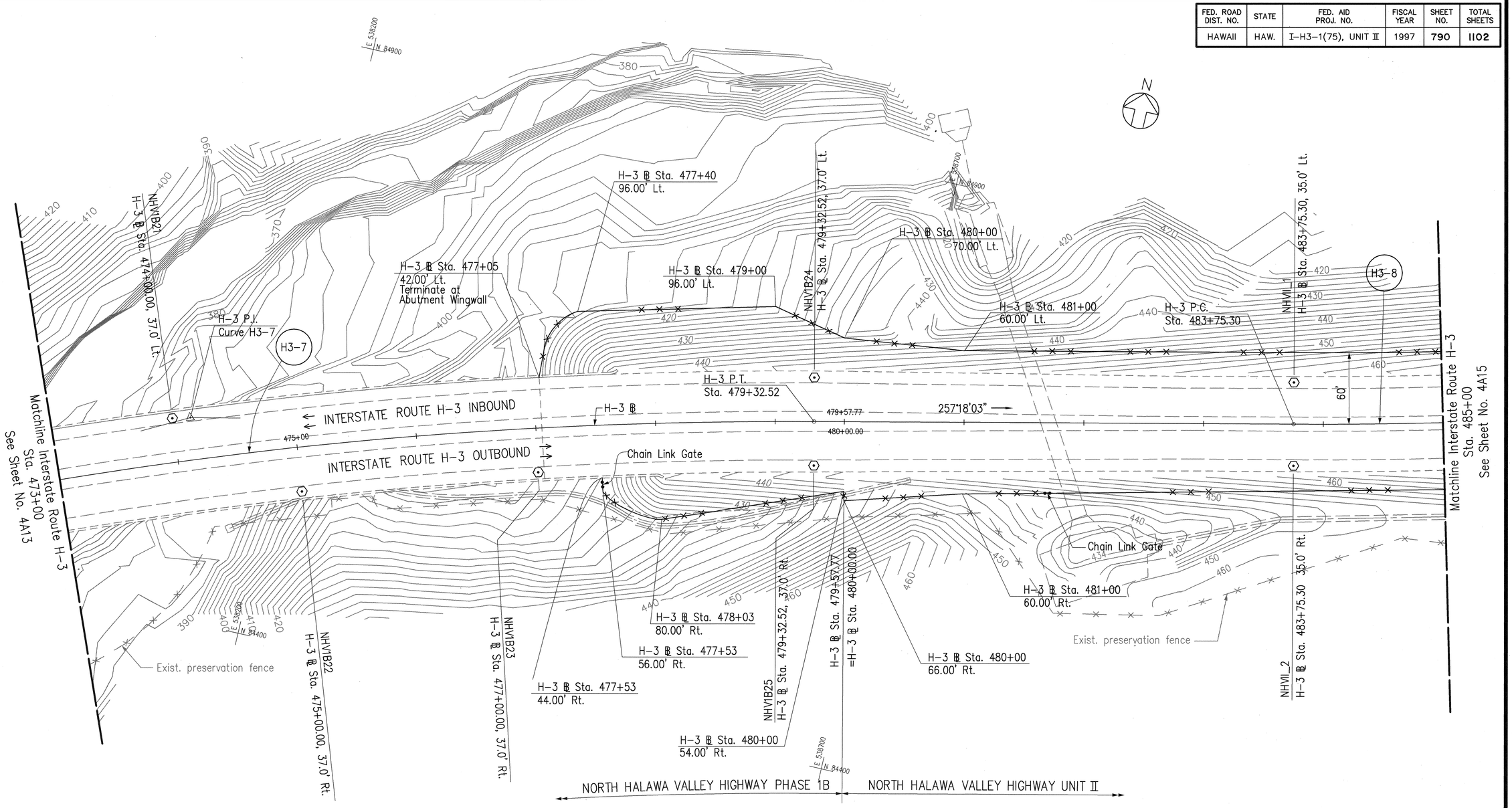

CURVE	RADIUS	LENGTH	TANGENT	CHORD	DELTA	COORDINATES OF POINT OF INTERSECTION OF TANGENTS	
H3-7	3800.00'	1035.37'	520.91'	1032.17'	15°36'40"	N 84566.05	E 538120.60
H3-8	4000.00'	2199.17'	1128.15'	2171.58'	31°30'03"	N 85016.62	E 540120.07

ORIGINAL PLAN
SURVEY PLOTTED BY ____ DATE
DRAWN BY " " "
TRACED BY " " "
DESIGNED BY " " "
QUANTITIES BY " " "
CHECKED BY " " "
NOTE BOOK
No.

CAD by J. Mimura, 55-52

Last Saved: J:\H3RF\RFU2\ALIGN\H3ALI-14.dwg 02/12/97 at 12:25

RANDALL M. URASAKI
LICENSED PROFESSIONAL ENGINEER
No. 7269-C
HAWAII, U.S.A.

THIS WORK WAS PREPARED BY ME OR UNDER MY SUPERVISION.

STATE OF HAWAII
DEPARTMENT OF TRANSPORTATION
HIGHWAYS DIVISION

NORTH HALAWA VALLEY ALIGNMENT, FENCING & SURVEY MONUMENTS

H-3 FINISH (UNIT II)
FAIP NO. I-H3-1(75), UNIT II
LEEWARD SECTION

SCALE: 1" = 40' DATE: JANUARY 1997

SHEET NO. 4A14 OF 19 SHEETS

FED. ROAD DIST. NO.	STATE	FED. AID PROJ. NO.	FISCAL YEAR	SHEET NO.	TOTAL SHEETS
HAWAII	HAW.	I-H3-1(75), UNIT II	1997	791	1102

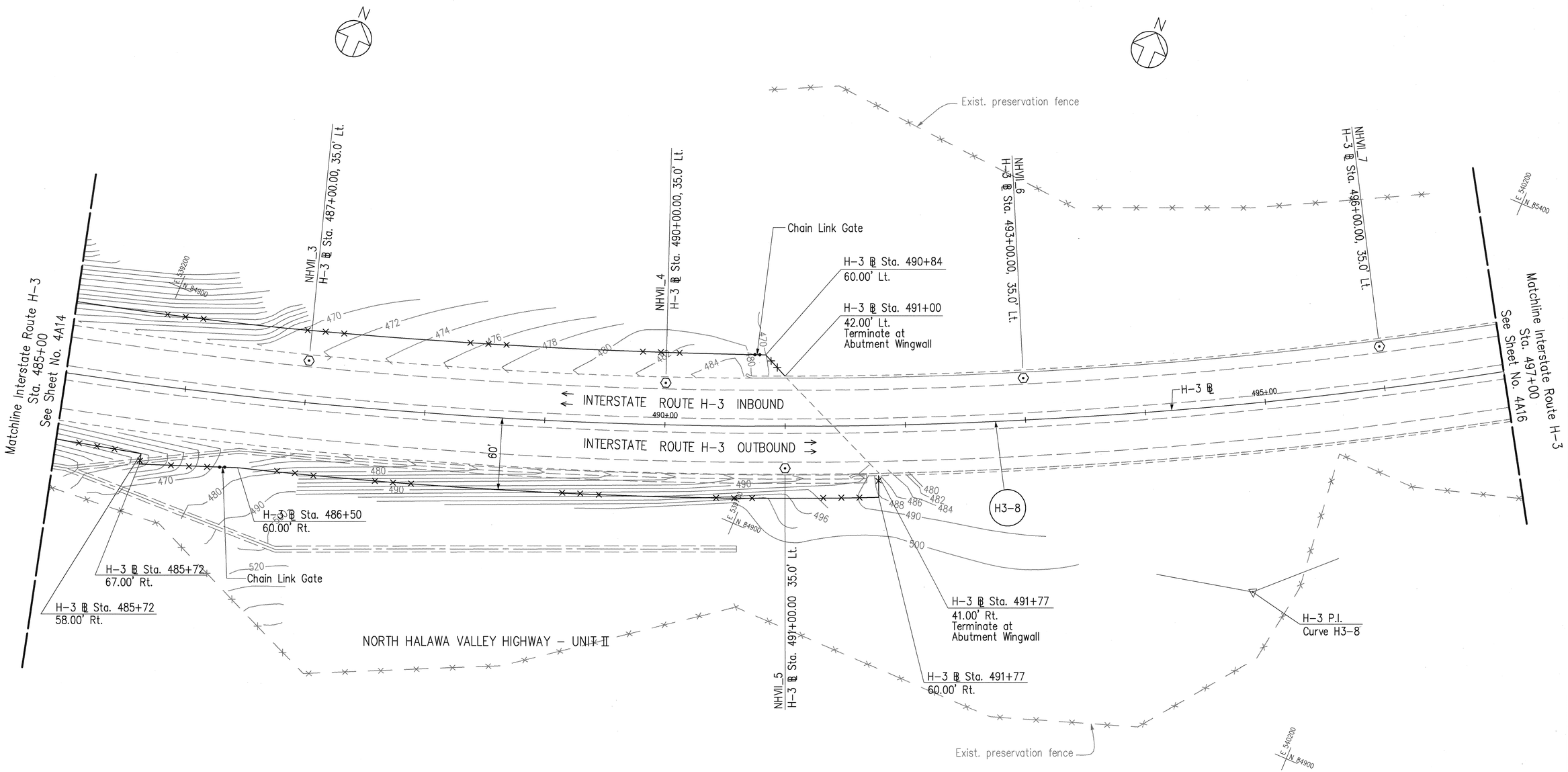

CURVE	RADIUS	LENGTH	TANGENT	CHORD	DELTA	COORDINATES OF POINT OF INTERSECTION OF TANGENTS
H3-8	4000.00'	2199.17'	1128.15'	2171.58'	31°30'03"	N 85016.62 E 540120.07

RANDALL M. URASAKI
LICENSED PROFESSIONAL ENGINEER
No. 7269-C
HAWAII, U.S.A.

THIS WORK WAS PREPARED BY ME OR UNDER MY SUPERVISION.

STATE OF HAWAII
DEPARTMENT OF TRANSPORTATION
HIGHWAYS DIVISION

NORTH HALAWA VALLEY ALIGNMENT, FENCING & SURVEY MONUMENTS

H-3 FINISH (UNIT II)
FAIP NO. I-H3-1(75), UNIT II
LEEWARD SECTION

SCALE: 1" = 40' DATE: JANUARY 1997

SHEET NO. 4A15 OF 19 SHEETS

ORIGINAL PLAN
SURVEY PLOTTED BY
DRAWN BY
TRACED BY
DESIGNED BY
QUANTITIES BY
CHECKED BY
DATE
NOTE BOOK
No.

CAD by J. Mimuro, 55-52

Last Saved: J:\H3RF\RFU2\ALIGN\H3ALI-15.dwg 02/12/97 at 12:32

FED. ROAD DIST. NO.	STATE	FED. AID PROJ. NO.	FISCAL YEAR	SHEET NO.	TOTAL SHEETS
HAWAII	HAW.	I-H3-1(75), UNIT II	1997	792	1102

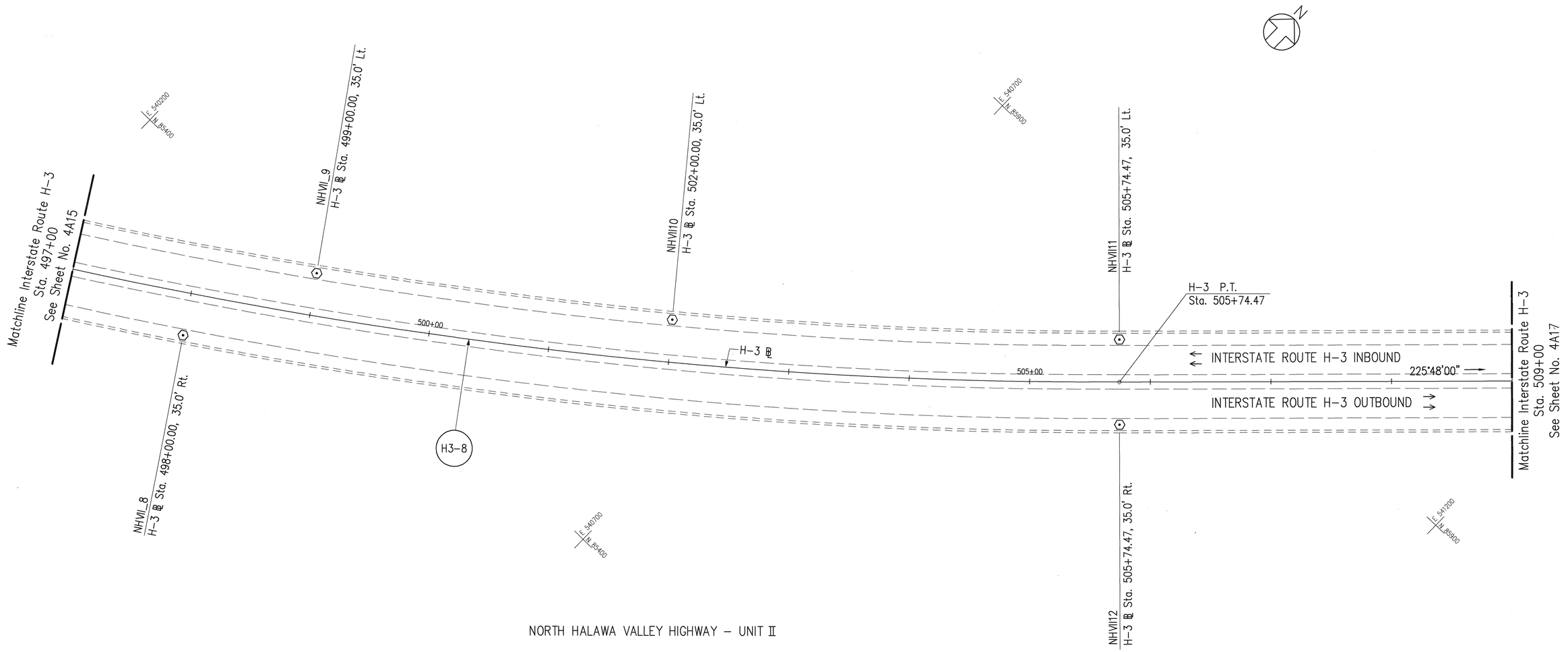

CURVE	RADIUS	LENGTH	TANGENT	CHORD	DELTA	COORDINATES OF POINT OF INTERSECTION OF TANGENTS	
H3-8	4000.00'	2199.17'	1128.15'	2171.58'	31°30'03"	N 85016.62	E 540120.07

ORIGINAL PLAN
SURVEY PLOTTED BY ____ DATE ____
DRAWN BY "
TRACED BY "
NOTE BOOK DESIGNED BY "
QUANTITIES BY "
No. ____ CHECKED BY "

CAD by J. Mimura, 55-52

Last Saved: J:\H3RF\RFU2\ALIGN\H3ALI-16.dwg 02/12/97 at 12:34

RANDALL M. URASAKI
LICENSED PROFESSIONAL ENGINEER
No. 7269-C
HAWAII, U.S.A.

THIS WORK WAS PREPARED BY ME OR UNDER MY SUPERVISION.

STATE OF HAWAII
DEPARTMENT OF TRANSPORTATION
HIGHWAYS DIVISION

NORTH HALAWA VALLEY ALIGNMENT, FENCING & SURVEY MONUMENTS

H-3 FINISH (UNIT II)
FAIP NO. I-H3-1(75), UNIT II
LEEWARD SECTION

SCALE: 1" = 40' DATE: JANUARY 1997

SHEET NO. 4A16 OF 19 SHEETS

792

FED. ROAD DIST. NO.	STATE	FED. AID PROJ. NO.	FISCAL YEAR	SHEET NO.	TOTAL SHEETS
HAWAII	HAW.	I-H3-1(75), UNIT II	1997	793	1102

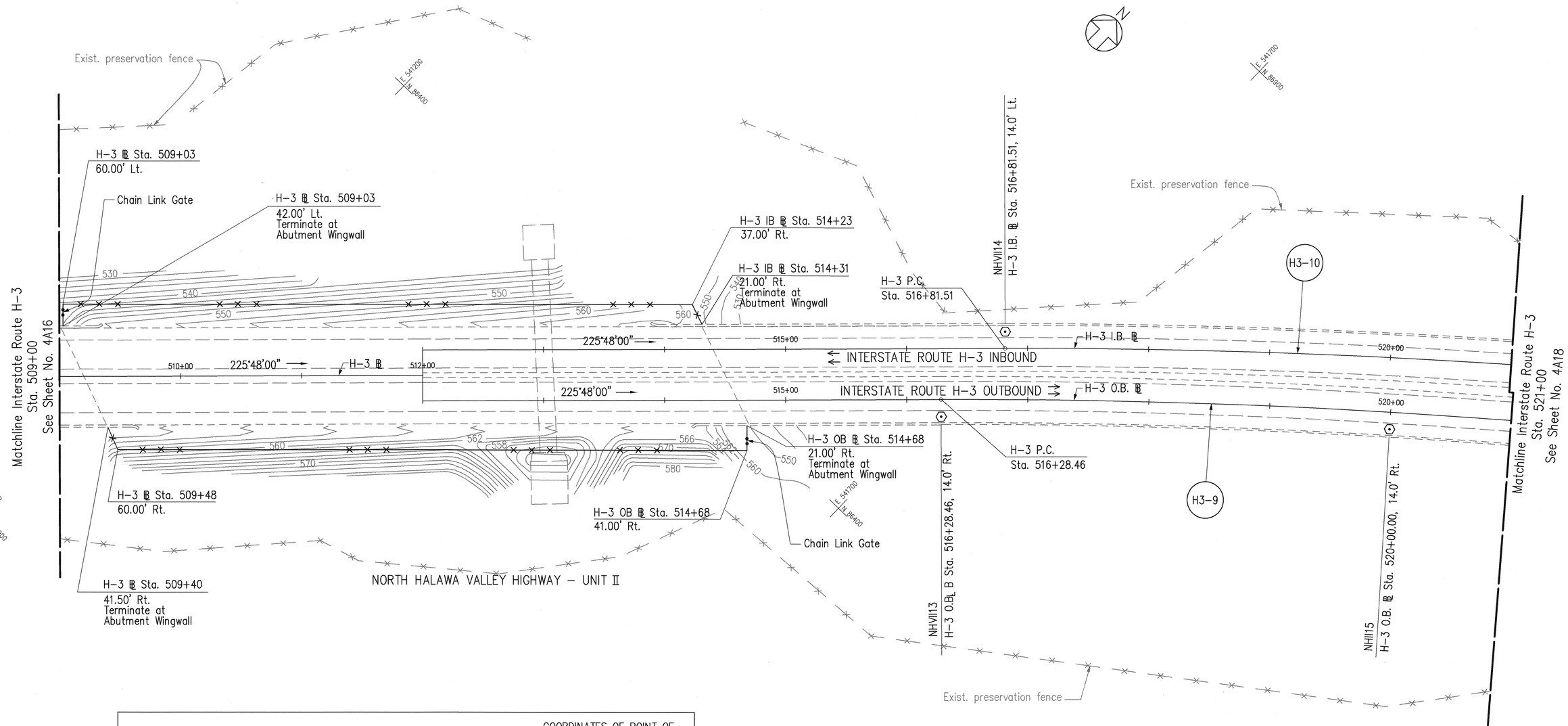

CURVE	RADIUS	LENGTH	TANGENT	CHORD	DELTA	COORDINATES OF POINT OF INTERSECTION OF TANGENTS	
H3-9	5962.28'	1871.44'	943.48'	1863.77'	17°59'02"	N 87180.63	E 542375.50
H3-10	5945.67'	1833.85'	924.26'	1826.59'	17°40'19"	N 87234.33	E 542370.47

ORIGINAL PLAN
SURVEY PLOTTED BY ____ DATE
DRAWN BY ____
TRACED BY ____
DESIGNED BY ____
QUANTITIES BY ____
CHECKED BY ____
NOTE BOOK No. ____

CAD by J. Mimura, 55-52

Last Saved: J:\H3RF\RFU2\ALIGN\H3ALI-17.dwg 02/12/97 at 12:38

RANDALL M. URASAKI
LICENSED PROFESSIONAL ENGINEER
No. 7269-C
HAWAII, U.S.A.

THIS WORK WAS PREPARED BY ME OR UNDER MY SUPERVISION.

STATE OF HAWAII
DEPARTMENT OF TRANSPORTATION
HIGHWAYS DIVISION

NORTH HALAWA VALLEY ALIGNMENT, FENCING & SURVEY MONUMENTS

H-3 FINISH (UNIT II)
FAIP NO. I-H3-1(75), UNIT II
LEEWARD SECTION

SCALE: 1" = 40' DATE: JANUARY 1997

SHEET NO. 4A17 OF 19 SHEETS

FED. ROAD DIST. NO.	STATE	FED. AID PROJ. NO.	FISCAL YEAR	SHEET NO.	TOTAL SHEETS
HAWAII	HAW.	I-H3-1(75), UNIT II	1997	794	1102

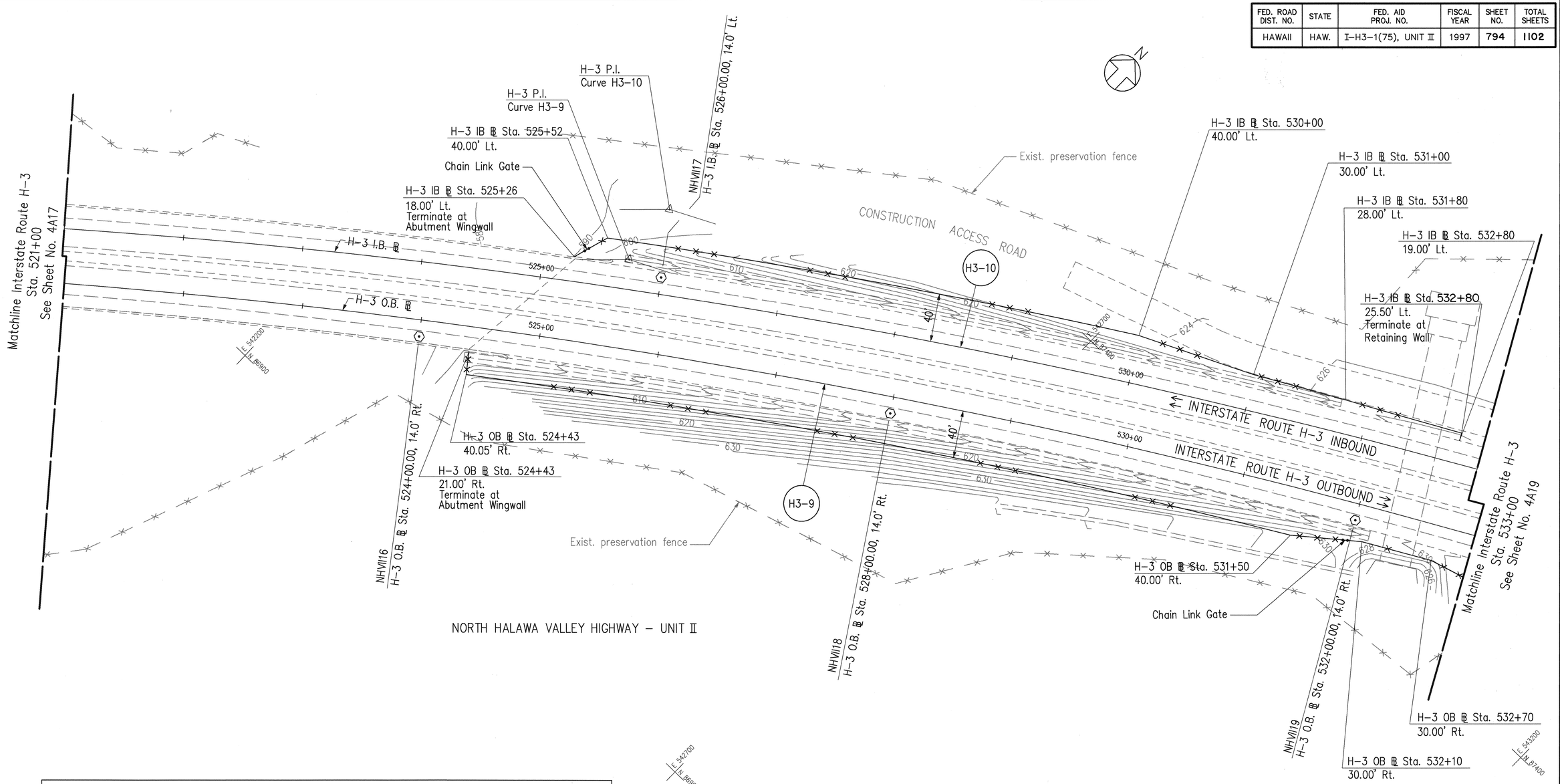

CURVE	RADIUS	LENGTH	TANGENT	CHORD	DELTA	COORDINATES OF POINT OF INTERSECTION OF TANGENTS	
H3-9	5962.28'	1871.44'	943.48'	1863.77'	17°59'02"	N 87180.63	E 542375.50
H3-10	5945.67'	1833.85'	924.26'	1826.59'	17°40'19"	N 87234.33	E 542370.47

ORIGINAL PLAN
SURVEY PLOTTED BY ____ DATE
DRAWN BY "
TRACED BY "
NOTE BOOK DESIGNED BY "
QUANTITIES BY "
No. ____ CHECKED BY "

CAD by J. Mimura, 55-52

Last Saved: J:\H3RF\RFU2\ALIGN\H3ALI-18.dwg 02/12/97 at 12:45

RANDALL M. URASAKI
LICENSED PROFESSIONAL ENGINEER
No. 7269-C
HAWAII, U.S.A.

THIS WORK WAS PREPARED BY ME OR UNDER MY SUPERVISION.

STATE OF HAWAII
DEPARTMENT OF TRANSPORTATION
HIGHWAYS DIVISION

NORTH HALAWA VALLEY ALIGNMENT, FENCING & SURVEY MONUMENTS

H-3 FINISH (UNIT II)
FAIP NO. I-H3-1(75), UNIT II
LEEWARD SECTION

SCALE: 1" = 40' DATE: JANUARY 1997

SHEET NO. 4A18 OF 19 SHEETS

FED. ROAD DIST. NO.	STATE	FED. AID PROJ. NO.	FISCAL YEAR	SHEET NO.	TOTAL SHEETS
HAWAII	HAW.	I-H3-1(75), UNIT II	1997	795	1102

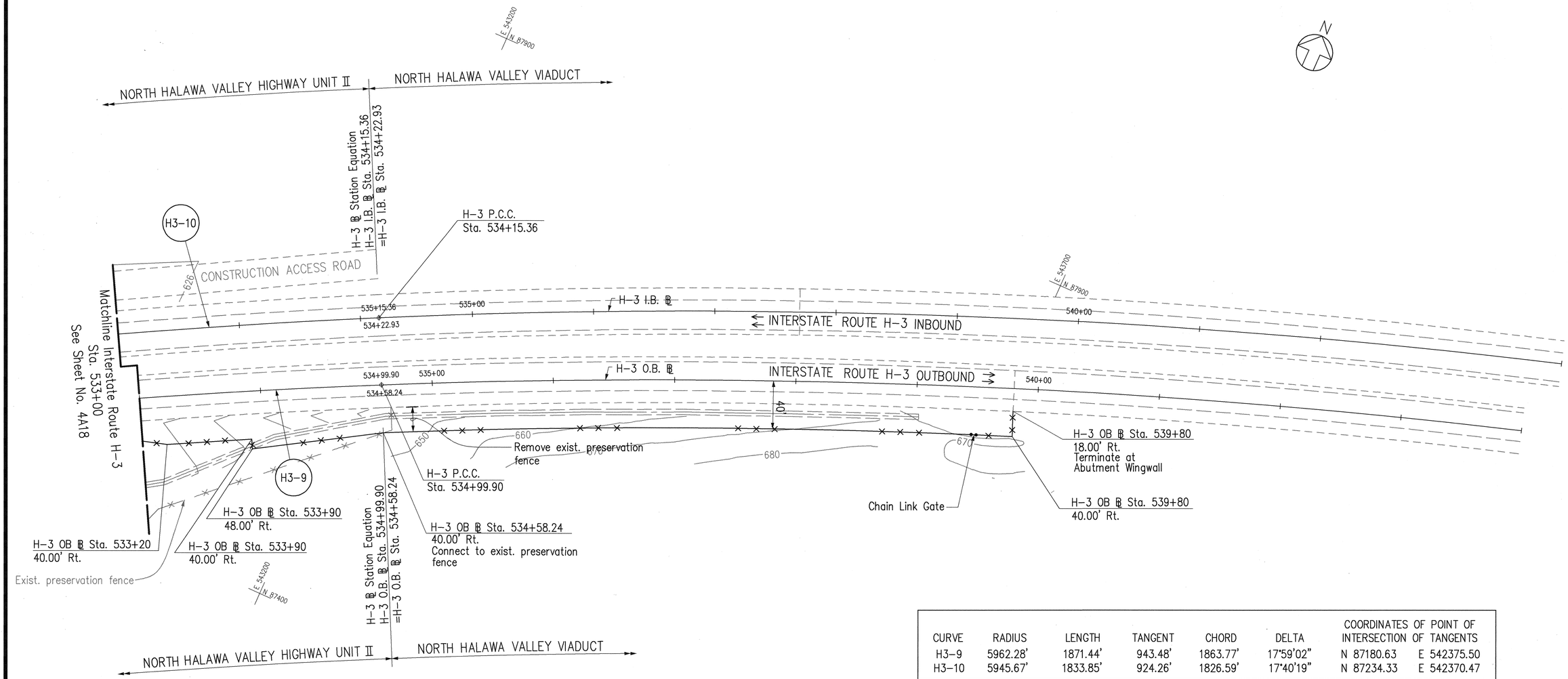

CURVE	RADIUS	LENGTH	TANGENT	CHORD	DELTA	COORDINATES OF POINT OF INTERSECTION OF TANGENTS	
H3-9	5962.28'	1871.44'	943.48'	1863.77'	17°59'02"	N 87180.63	E 542375.50
H3-10	5945.67'	1833.85'	924.26'	1826.59'	17°40'19"	N 87234.33	E 542370.47

E 543700
N 87400

RANDALL M. URASAKI
LICENSED PROFESSIONAL ENGINEER
No. 7269-C
HAWAII, U.S.A.

THIS WORK WAS PREPARED BY ME OR UNDER MY SUPERVISION.

STATE OF HAWAII
DEPARTMENT OF TRANSPORTATION
HIGHWAYS DIVISION

NORTH HALAWA VALLEY ALIGNMENT, FENCING & SURVEY MONUMENTS

H-3 FINISH (UNIT II)
FAIP NO. I-H3-1(75), UNIT II
LEEWARD SECTION

SCALE: 1" = 40' DATE: JANUARY 1997

SHEET NO. 4A19 OF 19 SHEETS

ORIGINAL PLAN
SURVEY PLOTTED BY ____ DATE ____
DRAWN BY ____
TRACED BY ____
DESIGNED BY ____
QUANTITIES BY ____
CHECKED BY ____
NOTE BOOK ____
No. ____

CAD by J. Mimura, 55-52

Last Saved: J:\H3RF\RFU2\ALIGN\H3ALI-19.dwg 02/12/97 at 12:47

FED. ROAD DIST. NO.	STATE	PROJ. NO.	FISCAL YEAR	SHEET NO.	TOTAL SHEETS
HAWAII	HAW.	I-H3-1(75) UNIT II	1997	796	1102

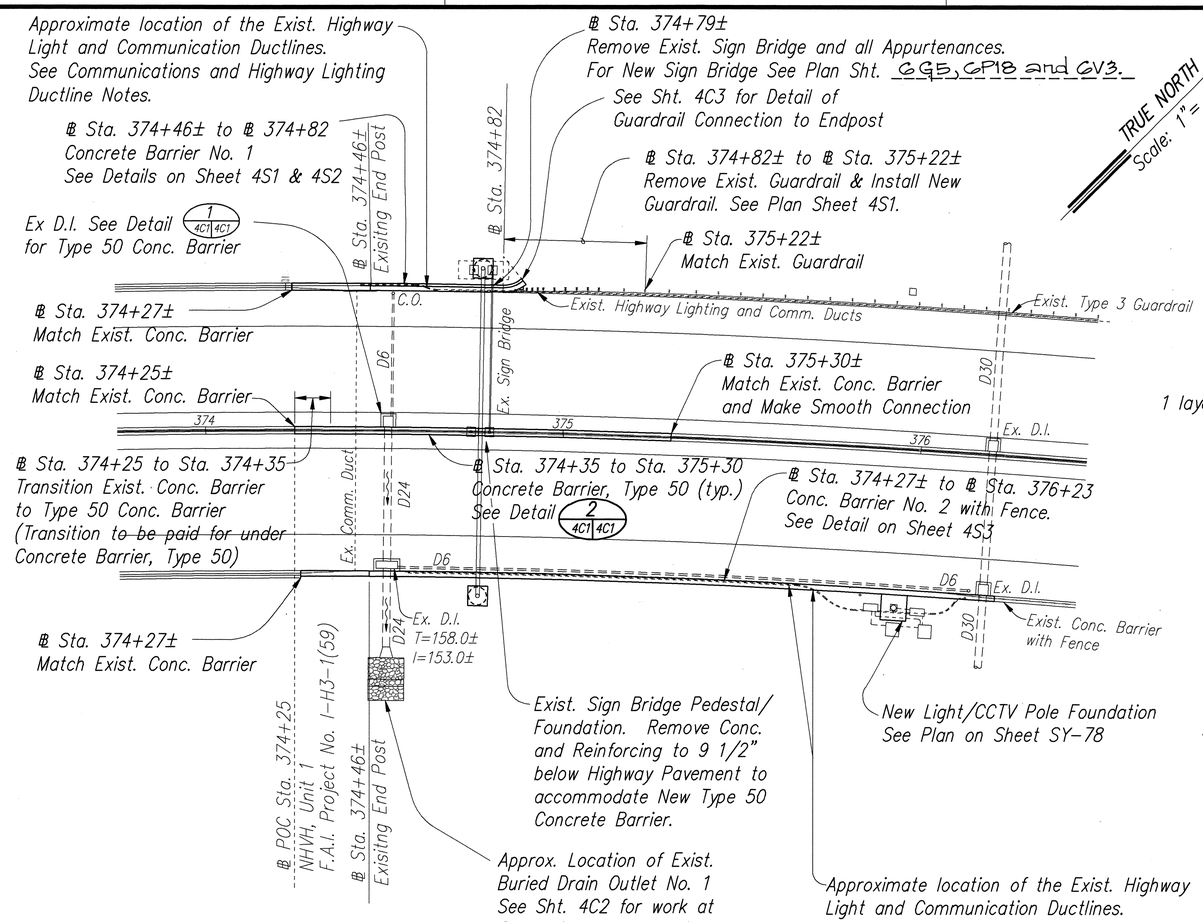

PLAN

Scale: 1"= 20'-0"

℄ CURVE DATA

$\Delta = 14° 15' 6"$
$\Delta/2 = 7° 7' 33"$
$R = 2800.00$
$T = 350.04$
$C = 694.67$
$Lc = 696.46$

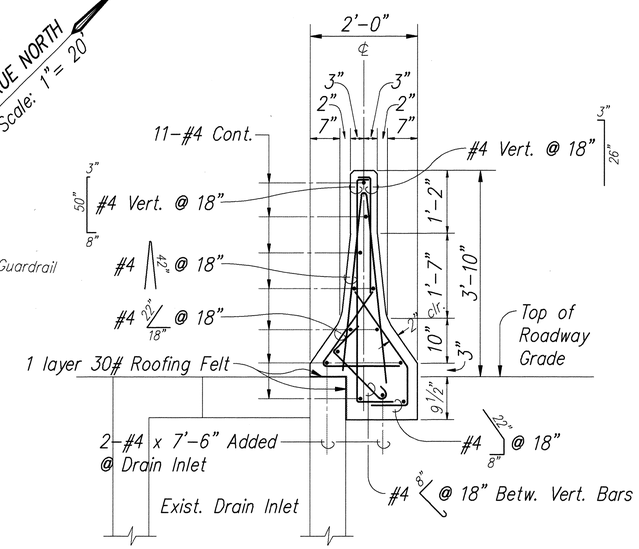

Note: Refer to Typ. Conc. Barrier, Type 50 Details for Details not shown.

CONCRETE BARRIER, TYPE 50 REINF. @ EXIST. DRAIN INLET

1 4C1 4C1

Scale: 3/4"= 1'-0"

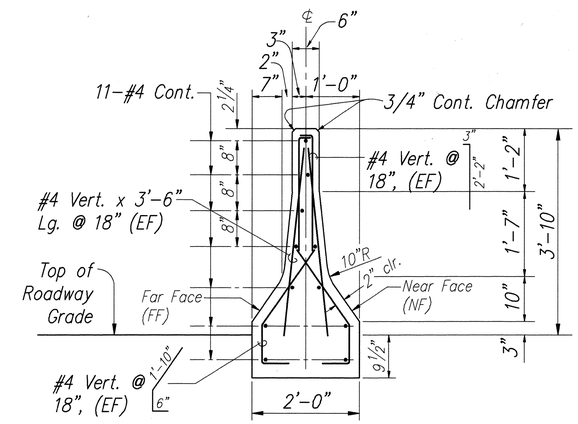

Note: See Standard Plan TE-63 for General Notes, Expansion Joint Detail, Construction and Control Joint Detail, and Optional Construction Joint Details.

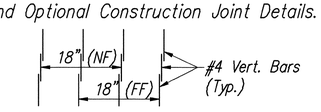

VERTICAL BAR ARRANGEMENT
N.T.S.

TYP. CONC. BARRIER, TYPE 50

2 4C1 4C1

Scale: 3/4"= 1'-0"

COMMUNICATIONS AND HIGHWAY LIGHTING DUCTLINES NOTES:

1- Prior to installation of Concrete Barrier Walls, Contractor shall verify location of existing fiber optic communication and lighting conduits by probing or other methods.

2- The Contractor shall exercise extreme caution when excavating for the Concrete Barrier Walls. The existing Ducts contain electrical and fiber optic cables which, if damaged, will be the Contractor's responsibility to repair at no cost to the State.

REGINALD M. SUZUKA LICENSED PROFESSIONAL ENGINEER No. 1462-C HAWAII, U.S.A.

THIS WORK WAS PREPARED BY ME OR UNDER MY SUPERVISION

Reginald M. Suzuka

Parsons, Inc. dba PARK ENGINEERING

STATE OF HAWAII
DEPARTMENT OF TRANSPORTATION
HIGHWAYS DIVISION

NORTH HALAWA VALLEY ROADWAY CONSTRUCTION

BARRIER AND GUARDRAIL CONN. DETAILS

H-3 FINISH (UNIT II)
FAIP NO. I-H3-1(75), UNIT II
LEEWARD SECTION

SCALE: AS NOTED DATE: FEB. 1997

SHEET No. 4C1 OF 22 SHEETS

ORIGINAL PLAN | NOTE BOOK No. | SURVEY PLOTTED BY | DRAWN BY | TRACED BY | DESIGNED BY | QUANTITIES BY | CHECKED BY | DATE

LIB: STATE\DOT\H-3\H3052\H3STNSGN\ H3GRAIL 2/14/97 AMM

FED. ROAD DIST. NO.	STATE	PROJ. NO.	FISCAL YEAR	SHEET NO.	TOTAL SHEETS
HAWAII	HAW.	I-H3-1(75) UNIT II	1997	797	1102

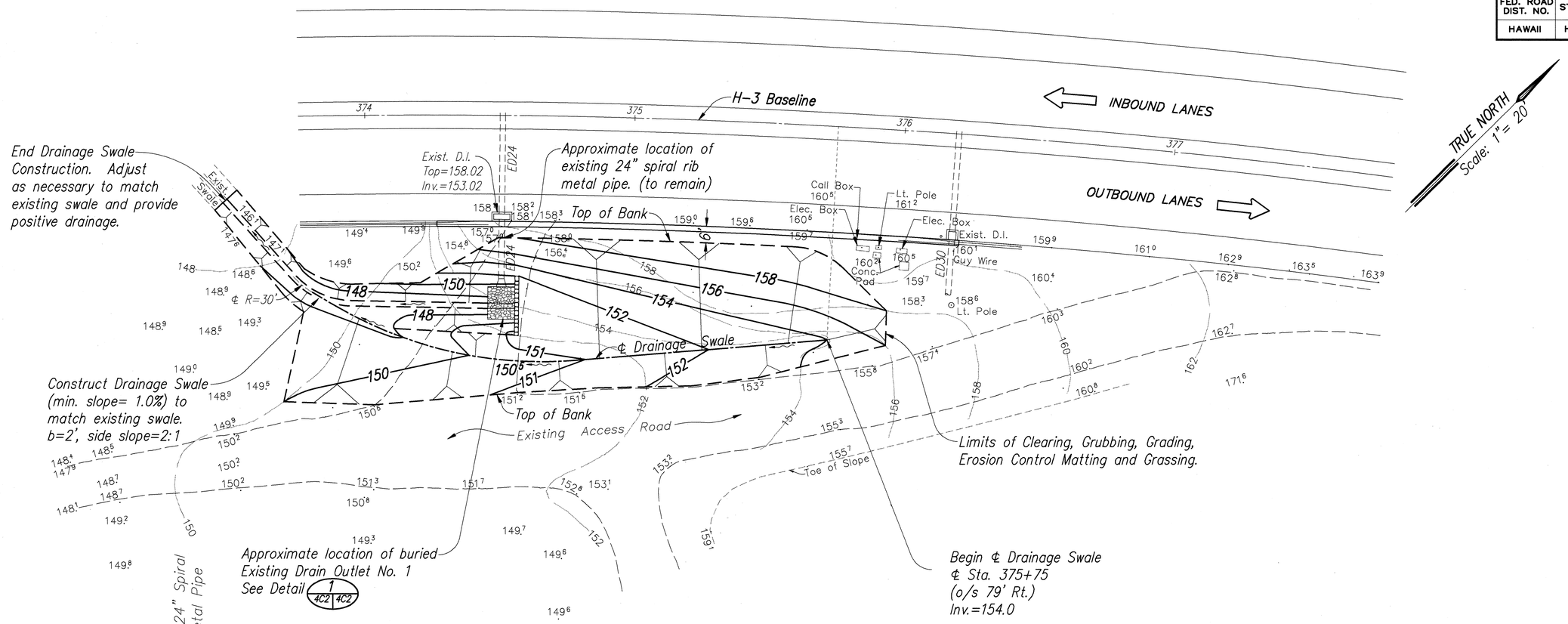

PLAN
Scale: 1"= 20'-0"

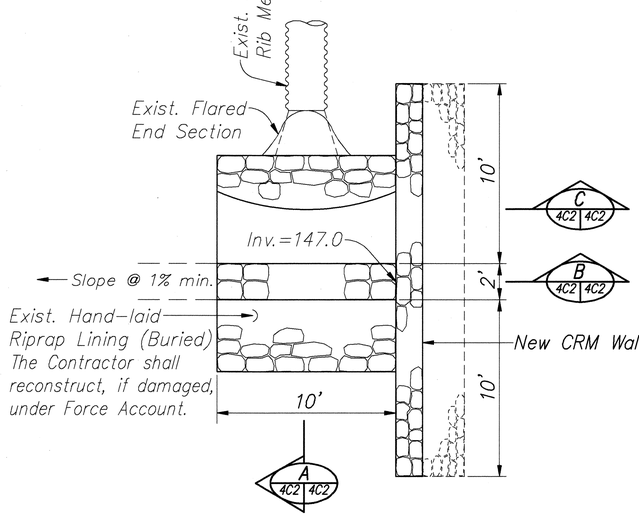

PLAN

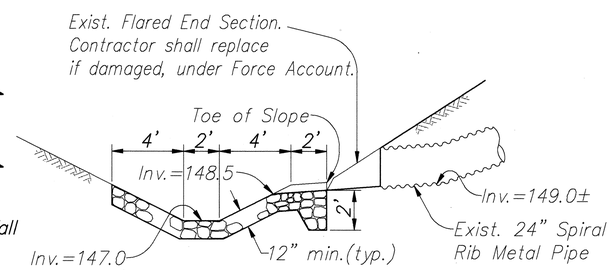

SECTION A 4C2 4C2

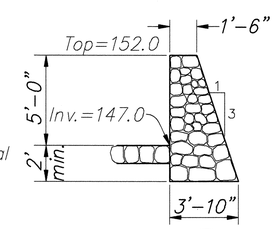

SECTION B 4C2 4C2

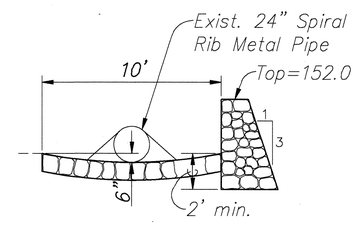

SECTION C 4C2 4C2

DETAIL – OUTLET NO. 1 (1 4C2 4C2)
Scale: 1/4"= 1'-0"

ORIGINAL PLAN	SURVEY PLOTTED BY	DATE
	DRAWN BY	
NOTE BOOK	TRACED BY	
	DESIGNED BY	
No.	QUANTITIES BY	
	CHECKED BY	

REGINALD M. SUZUKA LICENSED PROFESSIONAL ENGINEER No. 1462-C HAWAII, U.S.A.

THIS WORK WAS PREPARED BY ME OR UNDER MY SUPERVISION

Reginald M. Suzuka
PorEn, Inc. dba PARK ENGINEERING

STATE OF HAWAII
DEPARTMENT OF TRANSPORTATION
HIGHWAYS DIVISION

NORTH HALAWA VALLEY ROADWAY CONSTRUCTION

DRAINAGE SWALE CONSTRUCTION

H-3 FINISH (UNIT II)
FAIP NO. I-H3-1(75), UNIT II
LEEWARD SECTION

SCALE: AS NOTED DATE: FEB. 1997

SHEET No. 4C2 OF 22 SHEETS

797

LIB: STATE\OLD\H-3\H3SDS\H3SHEETS\DRAINAGE 2/21/97 AMM

FED. ROAD DIST. NO.	STATE	PROJ. NO.	FISCAL YEAR	SHEET NO.	TOTAL SHEETS
HAWAII	HAW.	I-H3-1(75) UNIT II	1997	798	1102

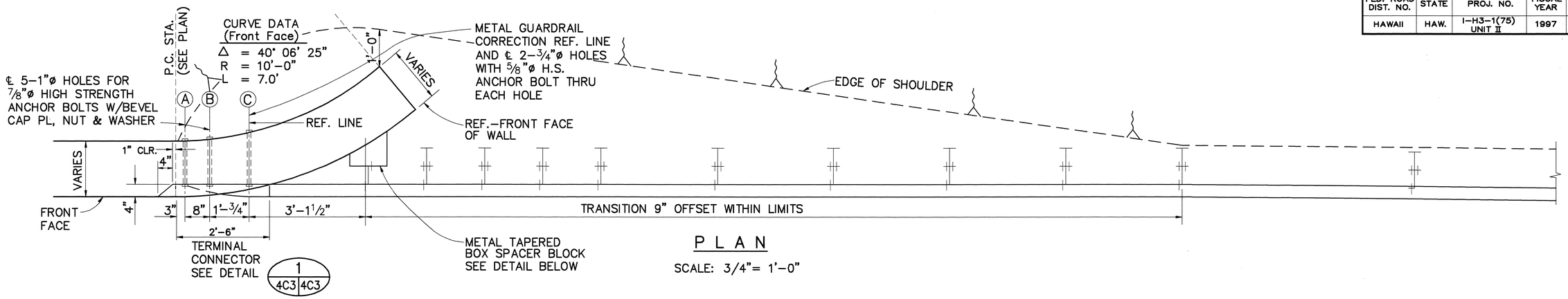

PLAN

SCALE: 3/4"= 1'-0"

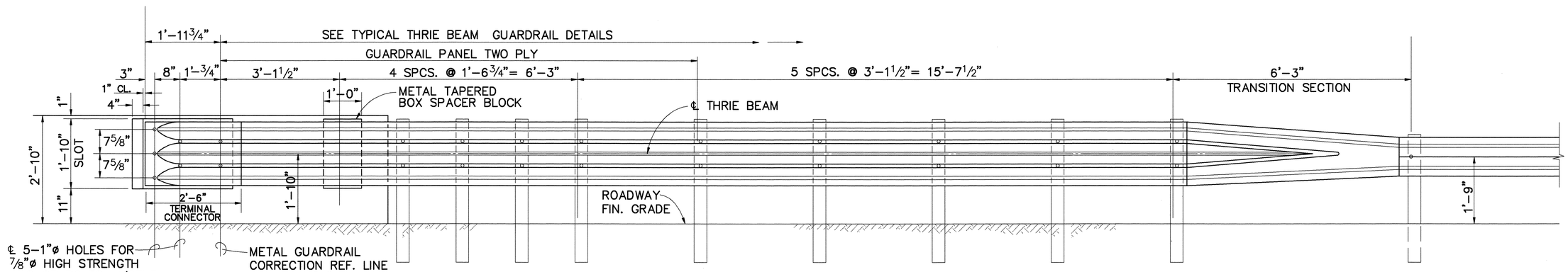

ELEVATION

SCALE: 3/4"= 1'-0"

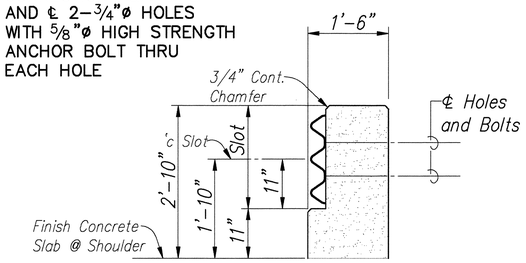

TERMINAL CONNECTOR DETAIL

1 4C3 4C3

Scale: 3/4"= 1'-0"

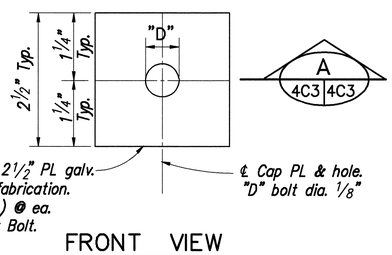

A 4C3 4C3

FRONT VIEW

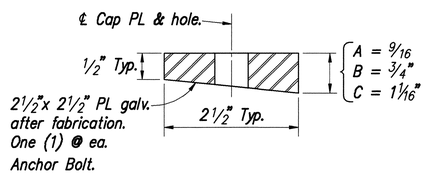

SECTION A 4C3 4C3

CAP (BEARING) PLATE DETAIL

SCALE: N.T.S.

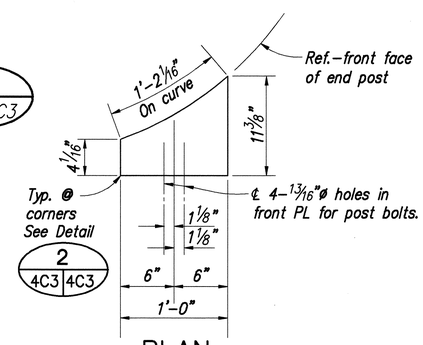

PLAN

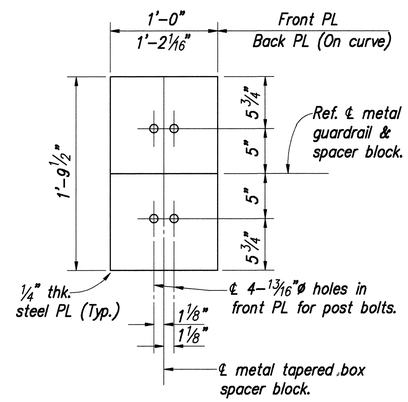

FRONT VIEW

METAL TAPERED BOX SPACER BLOCK DETAIL

SCALE: 1 1/2"=1'-0"

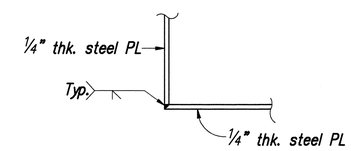

DETAIL 2

4C3 4C3

NOTE:

1. Cap PL and tapered box spacer shall be fabricated from ASTM A 36 steel and hot-dip galvanized after fabrication.
2. Cap PL's. tapered box spacer, anchor bolts including nuts and washers and other appurtenances shall be incidental to Guardrail Type 3 (Thrie Beam) endpost connection and will not be paid for separately.
3. See Standard Plan TE-57 for guard rail, type 3, thrie beam detail.

REGINALD M. SUZUKA LICENSED PROFESSIONAL ENGINEER No. 1462-C HAWAII, U.S.A.

THIS WORK WAS PREPARED BY ME OR UNDER MY SUPERVISION

Reginald M. Suzuka
Parsons, Inc.
dba PARK ENGINEERING

STATE OF HAWAII
DEPARTMENT OF TRANSPORTATION
HIGHWAYS DIVISION

NORTH HALAWA VALLEY
ROADWAY CONSTRUCTION

ENDPOST CONNECTION DETAILS

H-3 FINISH (UNIT II)
FAIP NO. I-H3-1(75), UNIT II
LEEWARD SECTION

SCALE: AS NOTED DATE: FEB. 1997

SHEET No. 4C3 OF 22 SHEETS

ORIGINAL PLAN | NOTE BOOK No. | SURVEY PLOTTED BY | DRAWN BY | TRACED BY | DESIGNED BY | QUANTITIES BY | CHECKED BY | DATE

\\NSN\JOB\SOS\H-1\H-1DOT\
LIB: STATE\TE\
RAILBARR 2/11/97 RSO

FED. ROAD DIST. NO.	STATE	PROJ. NO.	FISCAL YEAR	SHEET NO.	TOTAL SHEETS
HAWAII	HAW.	I-H3-1(75) UNIT II	1997	799	1102

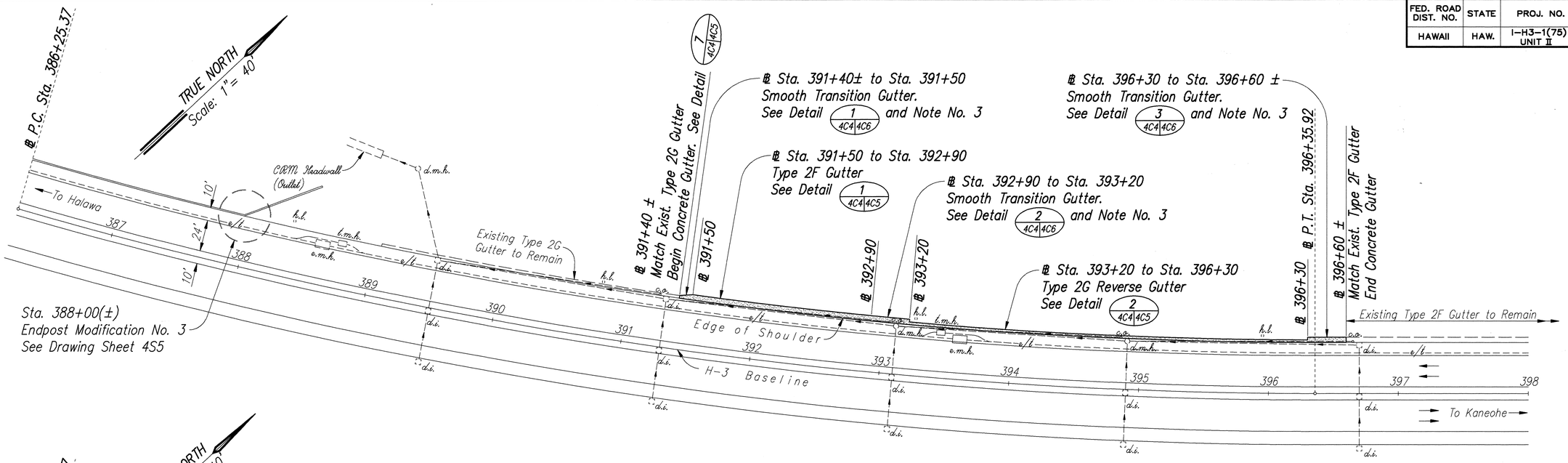

GUTTER PLAN

Scale: 1" = 40'-0"

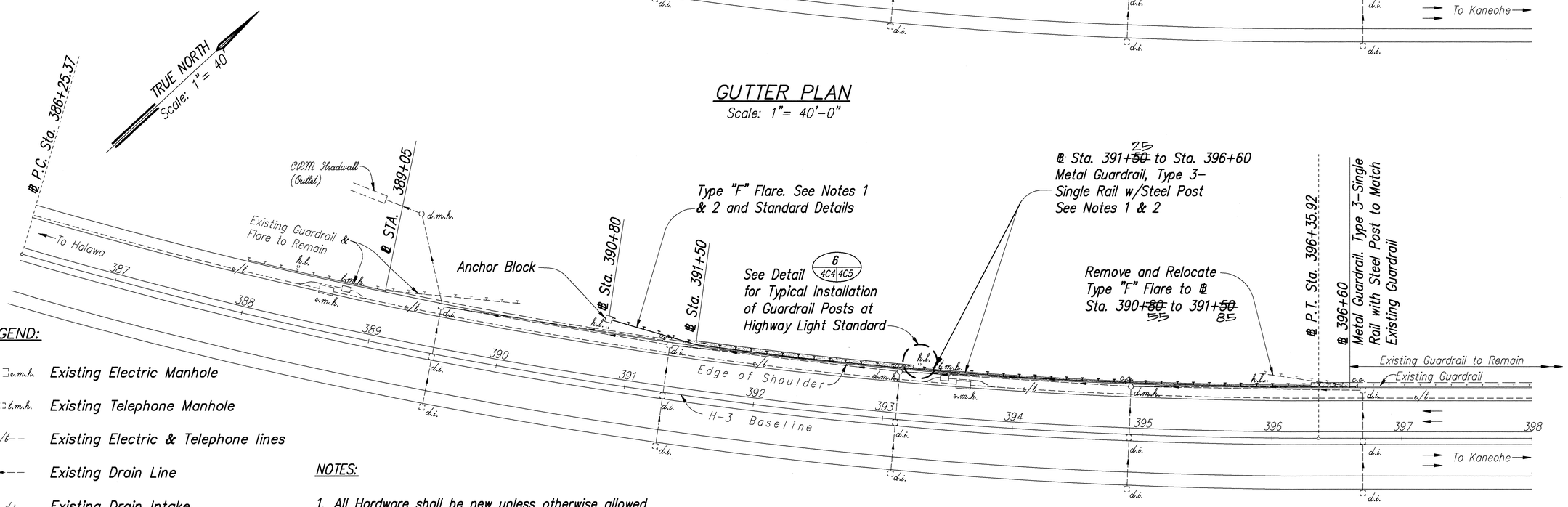

GUARDRAIL PLAN

Scale: 1" = 40'-0"

LEGEND:

- e.m.h. Existing Electric Manhole
- t.m.h. Existing Telephone Manhole
- e/t Existing Electric & Telephone lines
- Existing Drain Line
- d.i. Existing Drain Intake
- d.m.h. Existing Drain Manhole
- c.o. Existing Cleanout
- h.l. Existing Highway Light Standard
- Existing Guardrail
- New Guardrail

NOTES:

1. All Hardware shall be new unless otherwise allowed by the Engineer.
2. Only undamaged Rail Elements and Posts shall be reused. Unacceptable material shall be replaced by the Contractor at no additional cost to the State.
3. The accepted Transition Gutter will be paid for under "Transition Gutter".

ORIGINAL PLAN	SURVEY PLOTTED BY	DATE
	DRAWN BY	
NOTE BOOK	TRACED BY	
	DESIGNED BY	
	QUANTITIES BY	
No.	CHECKED BY	

REGINALD M. SUZUKA LICENSED PROFESSIONAL ENGINEER No. 1462-C HAWAII, U.S.A.

THIS WORK WAS PREPARED BY ME OR UNDER MY SUPERVISION

Reginald M. Suzuka

PorEx, Inc. dba PARK ENGINEERING

STATE OF HAWAII
DEPARTMENT OF TRANSPORTATION
HIGHWAYS DIVISION

NORTH HALAWA VALLEY ROADWAY CONSTRUCTION

GUTTER AND GUARDRAIL

H-3 FINISH (UNIT II)
FAIP NO. I-H3-1(75), UNIT II
LEEWARD SECTION

SCALE: AS NOTED DATE: FEB. 1997

SHEET No. 4C4 OF 22 SHEETS

LIB: STATE\DOT\H-3\H3052\H3SNUSG\GRAILPLN 2/11/97 AMM

FED. ROAD DIST. NO.	STATE	PROJ. NO.	FISCAL YEAR	SHEET NO.	TOTAL SHEETS
HAWAII	HAW.	I-H3-1(75) UNIT II	1997	C.O. 799S-1	1102

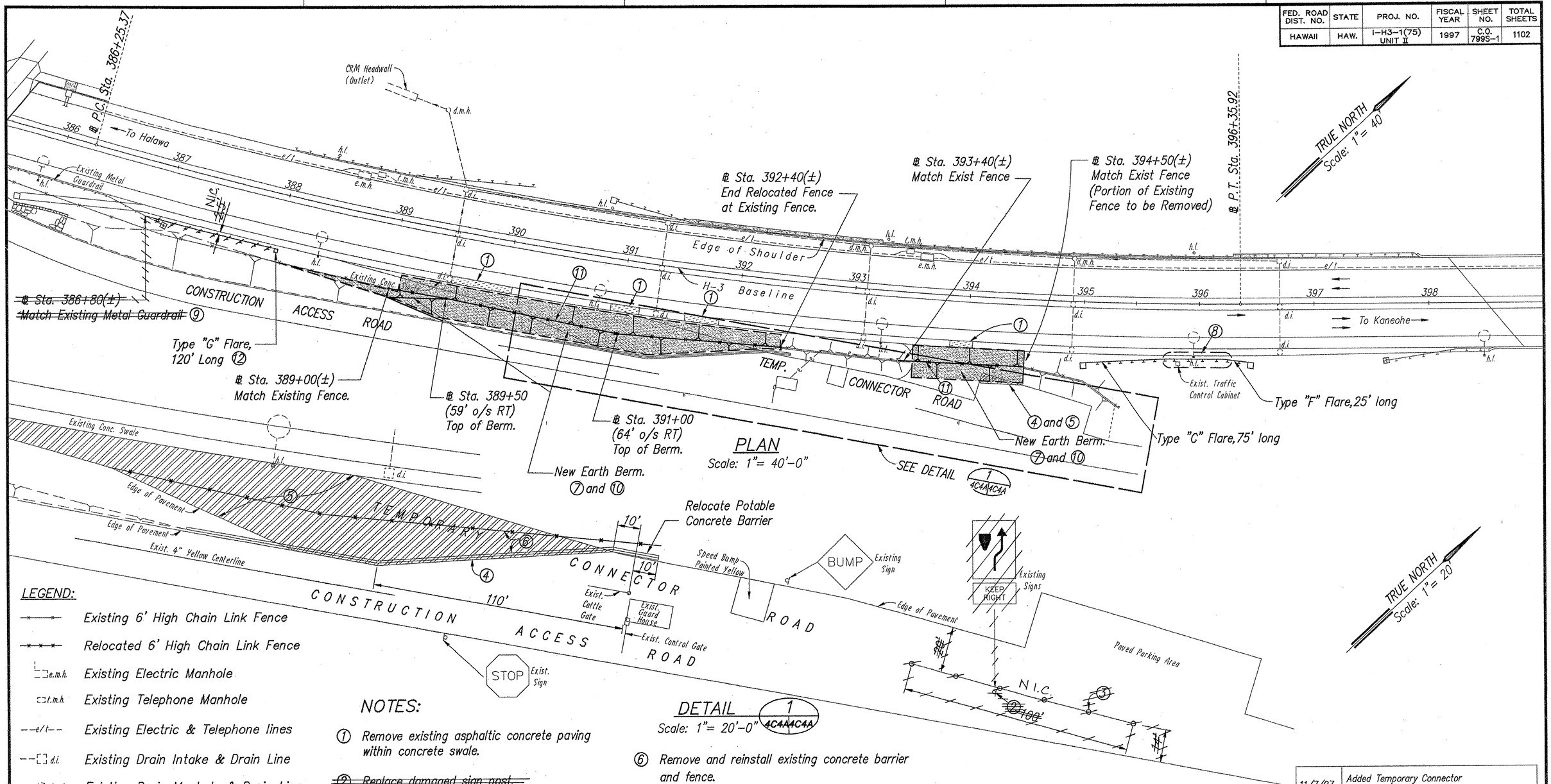

LEGEND:

- Existing 6' High Chain Link Fence
- Relocated 6' High Chain Link Fence
- e.m.h. Existing Electric Manhole
- t.m.h. Existing Telephone Manhole
- e/t Existing Electric & Telephone lines
- d.i. Existing Drain Intake & Drain Line
- d.m.h. Existing Drain Manhole & Drain Line
- h.l. Existing Highway Light Standard
- Existing Guardrail
- New Metal Guardrail, Type 3-Single with Rub Rail on Steel Post
- Asphalt Concrete Pavement to be Removed
- New Earth Berm

NOTES:

1. Remove existing asphaltic concrete paving within concrete swale.
2. ~~Replace damaged sign post.~~
3. ~~Install 6 each 42" high (minimum) delineator posts with reflective collars.~~
4. Limit of asphaltic concrete pavement removal. Saw cut before removal.
5. Remove existing 5 1/2" thick asphaltic concrete paving only and backfill with aceptable on-site material or imported select borrow.

DETAIL 1 (4C4A/4C4A)

Scale: 1"= 20'-0"

6. Remove and reinstall existing concrete barrier and fence.
7. New earth berm. See Detail 1 (4C4A/4C4B) for Typical Detail
8. New guardrail and relocated light standard. See Detail 2 (4C4A/4C4B)
9. ~~Remove flare beyond connection. Abandon concrete/GRP anchor.~~ N.I.C.
10. Hydromulch new earth berm and all exposed slope areas.
11. Remove existing chainlink fence and reinstall along top of new earth berm.
12. The Contractor shall locate existing Highway Light and Communication Ductlines prior to installing guardrail posts.

DATE	REVISION
11/7/97	Added Temporary Connector Road Removal Work

STATE OF HAWAII
DEPARTMENT OF TRANSPORTATION
HIGHWAYS DIVISION

NORTH HALAWA VALLEY
ROADWAY CONSTRUCTION

CONNECTOR ROAD REMOVAL PLAN

H-3 FINISH (UNIT II)
FAIP NO. I-H3-1(75), UNIT II
LEEWARD SECTION

SCALE: AS NOTED DATE: OCT. 1997

SHEET No. 4C4A OF 22 SHEETS

REGINALD M. SUZUKI LICENSED PROFESSIONAL ENGINEER No. 1462-C HAWAII, U.S.A.

THIS WORK WAS PREPARED BY ME OR UNDER MY SUPERVISION

PORCI, Inc. dba PARK ENGINEERING

SURVEY PLOTTED BY
DRAWN BY
TRACED BY
DESIGNED BY
QUANTITIES BY
CHECKED BY
DATE

ORIGINAL PLAN
NOTE BOOK No.

LIB: STATE\DOT\H-3\3052\H3FINISH\ BERMP 10/27/97 GHT 11/4/97 MSC

C.O. 799S-1

FED. ROAD DIST. NO.	STATE	PROJ. NO.	FISCAL YEAR	SHEET NO.	TOTAL SHEETS
HAWAII	HAW.	I-H3-1(75) UNIT II	1997	C.O. 799S-2	1102

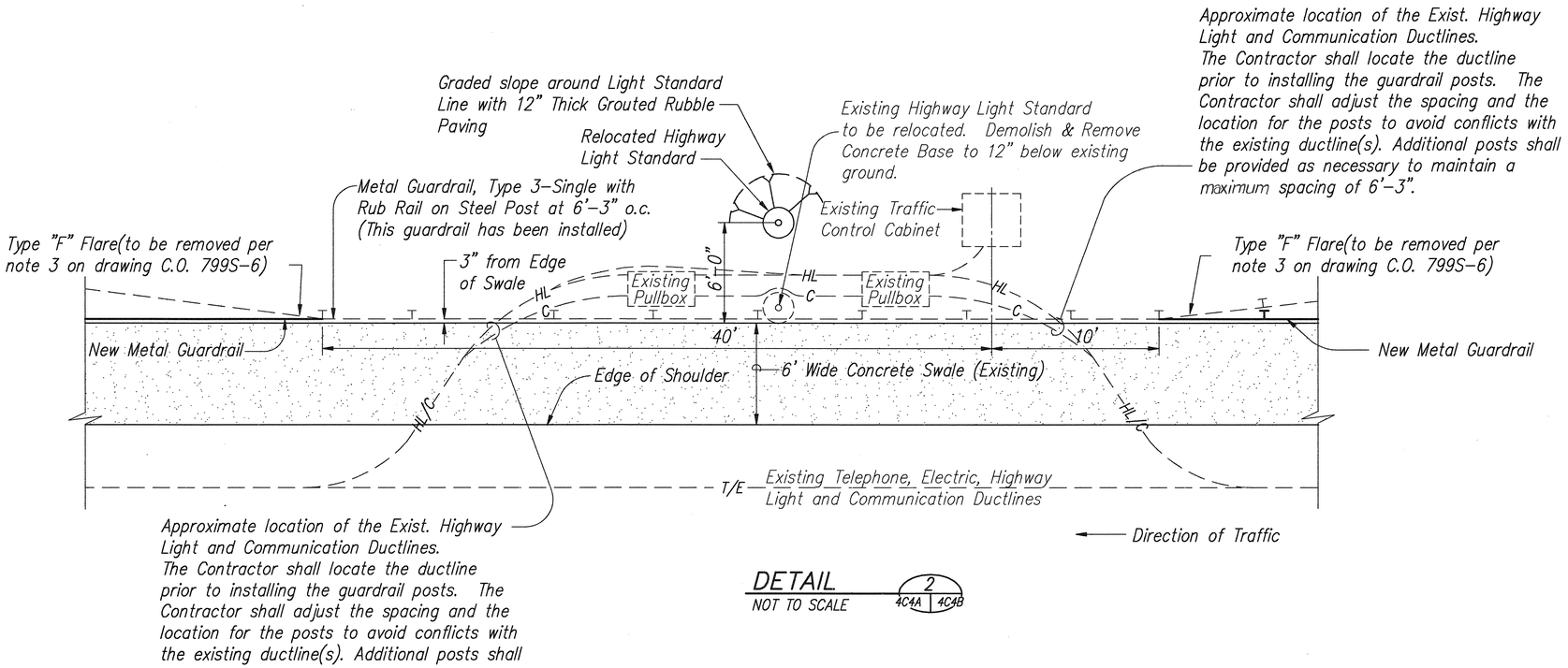

DETAIL 2 (4C4A | 4C4B)
NOT TO SCALE

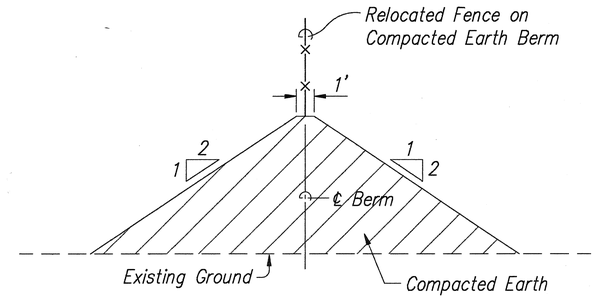

TYPICAL EARTH BERM 1 (4C4A | 4C4B)
NOT TO SCALE

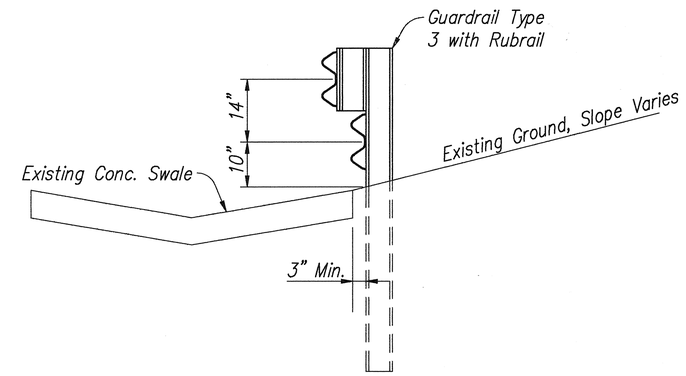

GUARDRAIL INSTALLATION 4 (4C4F | 4C4B)
SCALE: 3/4"= 1'-0"

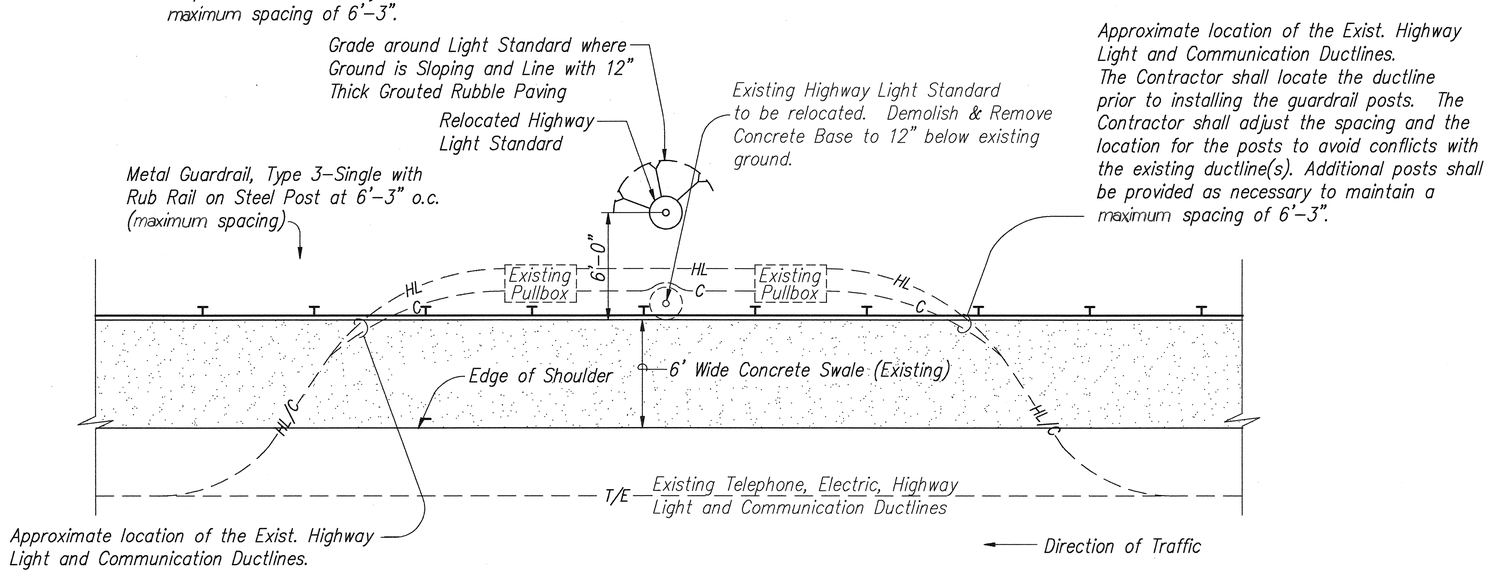

DETAIL 3 (4C4F | 4C4B)
NOT TO SCALE

DATE	REVISION
2/18/98	Added Detail 3 and Detail 4
11/7/97	Details for Temporary Connector Road Removal Work

REGINALD M. SUZUKA LICENSED PROFESSIONAL ENGINEER No. 1462-C HAWAII, U.S.A.

THIS WORK WAS PREPARED BY ME OR UNDER MY SUPERVISION

Reginald M. Suzuka
PaKo, Inc.
dba PARK ENGINEERING

STATE OF HAWAII
DEPARTMENT OF TRANSPORTATION
HIGHWAYS DIVISION

NORTH HALAWA VALLEY
ROADWAY CONSTRUCTION

DETAIL SHEET

H-3 FINISH (UNIT II)
FAIP NO. I-H3-1(75), UNIT II
LEEWARD SECTION

SCALE: AS NOTED DATE: OCT. 1997

SHEET No. 4C4B OF 22 SHEETS

ORIGINAL PLAN | SURVEY PLOTTED BY | DRAWN BY | TRACED BY | DESIGNED BY | QUANTITIES BY | CHECKED BY | DATE | NOTE BOOK No.

LIB. STATE DOT\H-3\HSFINISH\C0-2 DETAILS V2a0/98 GKT

C.O. 799S-2

FED. ROAD DIS. NO.	STATE	FED. AID PROJ. NO.	FISCAL YEAR	SHEET NO.	TOTAL SHEETS
HAWAII	HAW.	I-H3-1(75) UNIT II	1997	C.O.799 S-3	211

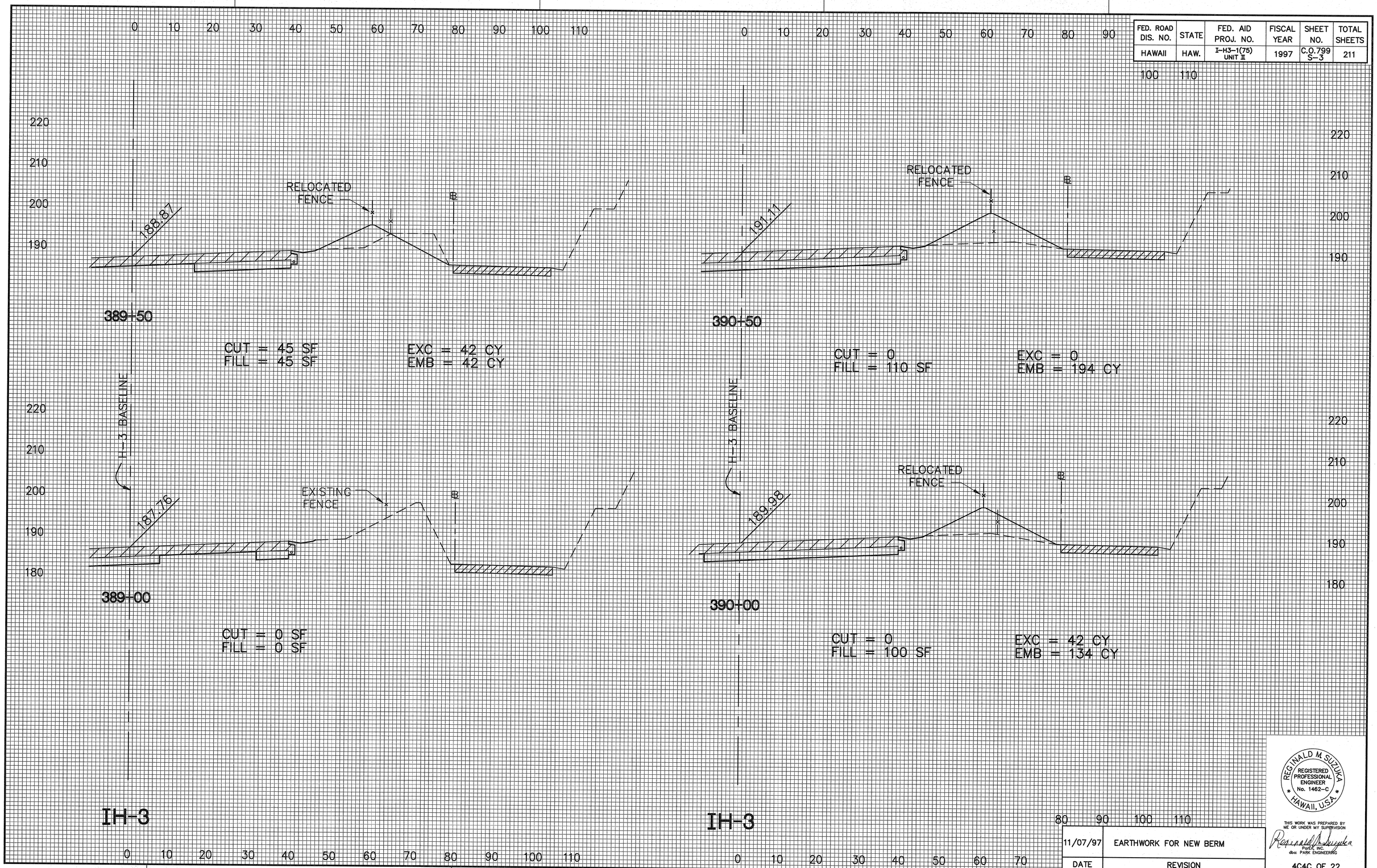

DATE	REVISION
11/07/97	EARTHWORK FOR NEW BERM

SURVEY PLOTTED BY
DRAWN BY
TRACED BY
DESIGNED BY
QUANTITIES BY
CHECKED BY
DATE

ORIGINAL PLAN
NOTEBOOK
No.

REGINALD M. SUZUKA
REGISTERED PROFESSIONAL ENGINEER
No. 1462-C
HAWAII, U.S.A.

THIS WORK WAS PREPARED BY ME OR UNDER MY SUPERVISION

Reginald M. Suzuka

PorE, INC.
dba: PARK ENGINEERING

4C4C OF 22

C.O. 799S-3

H3XS1 11/04/97 MSC

FED. ROAD DIS. NO.	STATE	FED. AID PROJ. NO.	FISCAL YEAR	SHEET NO.	TOTAL SHEETS
HAWAII	HAW.	I-H3-1(75) UNIT II	1997	C.O.799 S-4	211

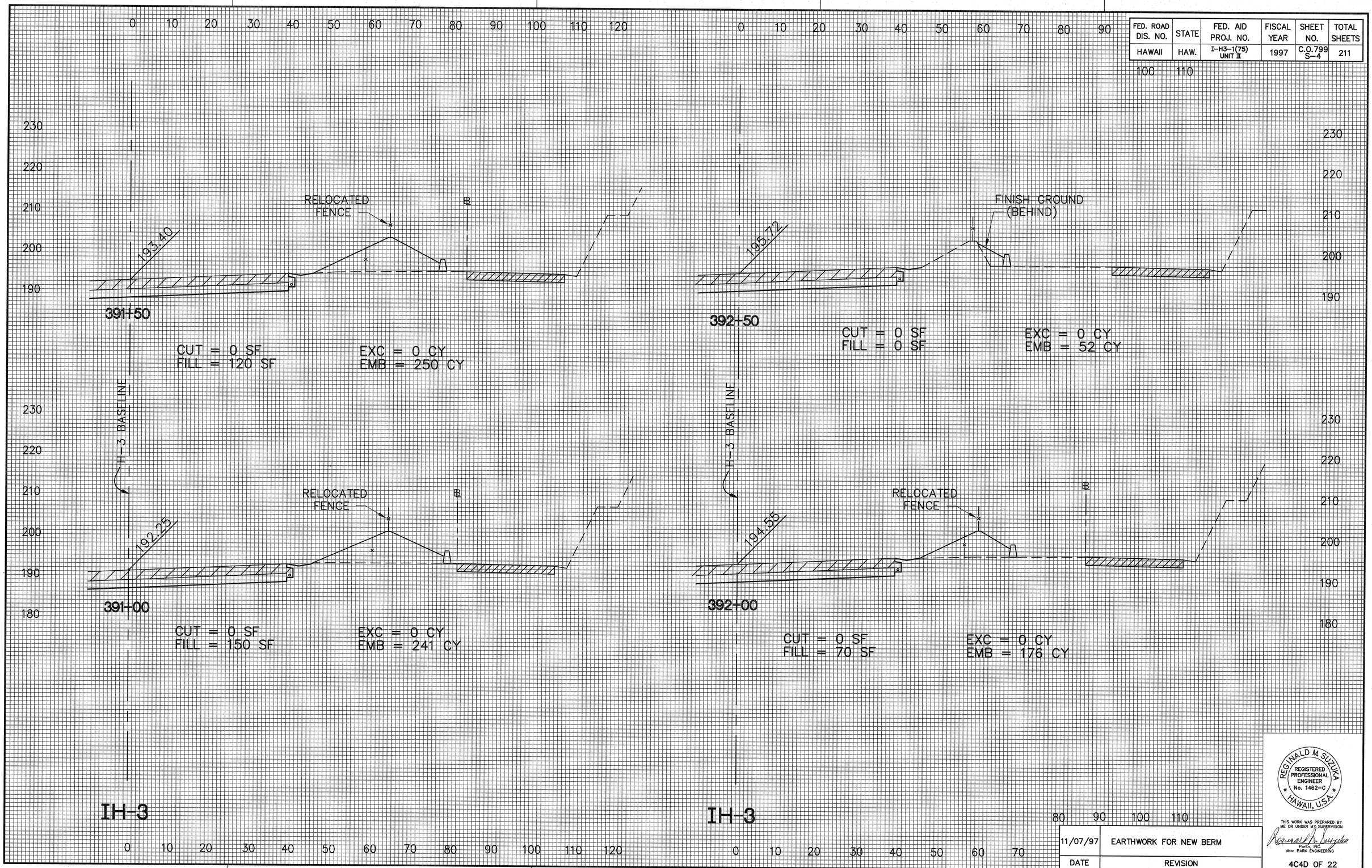

DATE	REVISION
11/07/97	EARTHWORK FOR NEW BERM

REGINALD M SUZUKA
REGISTERED PROFESSIONAL ENGINEER
No. 1462-C
HAWAII, U.S.A.

THIS WORK WAS PREPARED BY ME OR UNDER MY SUPERVISION

PorEn, INC.
dba: PARK ENGINEERING

4C4D OF 22

C.O. 799S-4

ORIGINAL PLAN	SURVEY PLOTTED BY	DATE
	TRACED BY	
NOTEBOOK	DESIGNED BY	
	QUANTITIES BY	
No.	CHECKED BY	

FED. ROAD DIS. NO.	STATE	FED. AID PROJ. NO.	FISCAL YEAR	SHEET NO.	TOTAL SHEETS
HAWAII	HAW.	I-H3-1(75) UNIT II	1997	C.O.799 S-5	211

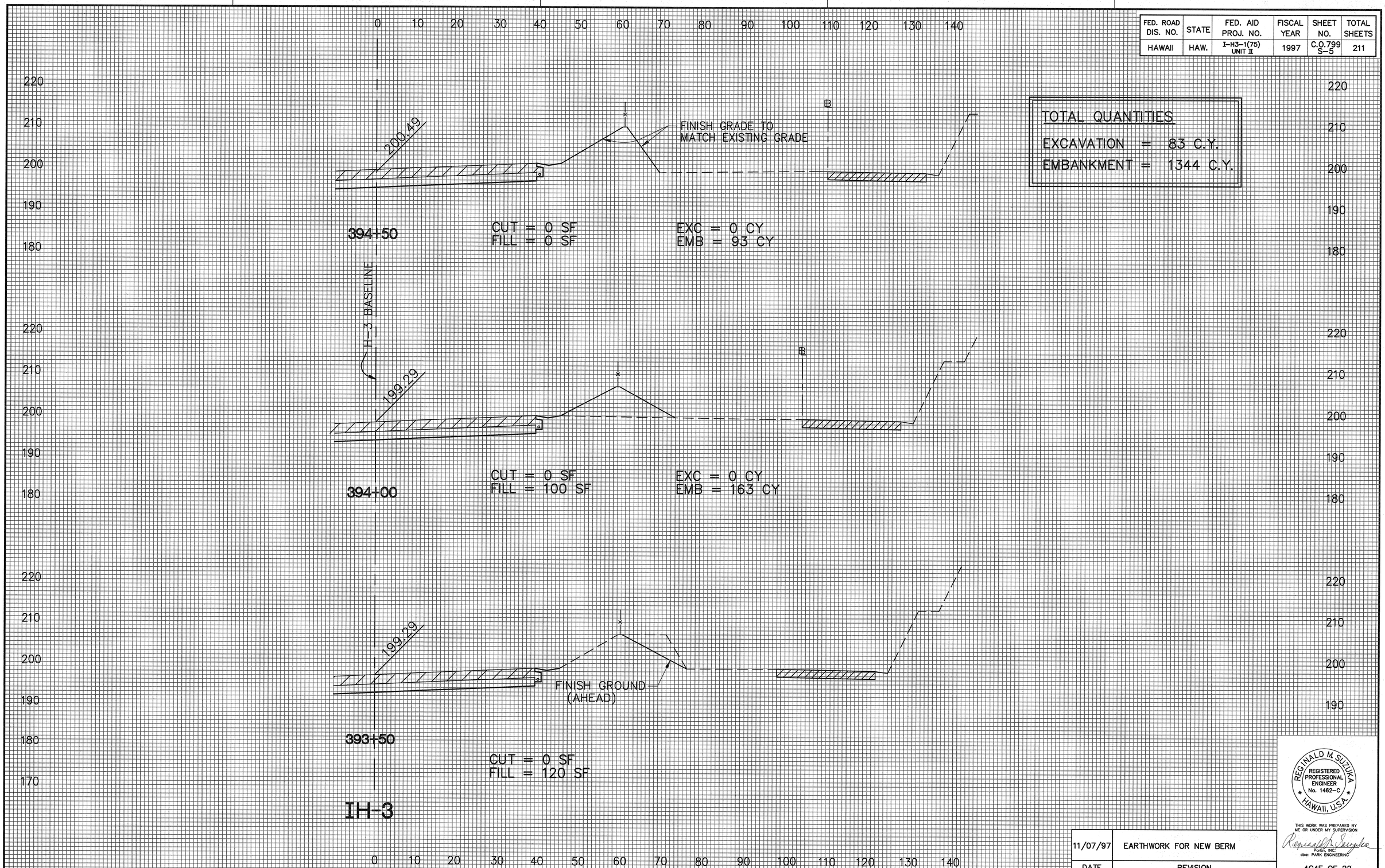

TOTAL QUANTITIES

EXCAVATION = 83 C.Y.

EMBANKMENT = 1344 C.Y.

DATE	REVISION
11/07/97	EARTHWORK FOR NEW BERM

REGINALD M. SUZUKA
REGISTERED PROFESSIONAL ENGINEER
No. 1462-C
HAWAII, U.S.A.

THIS WORK WAS PREPARED BY ME OR UNDER MY SUPERVISION

PorEx, INC.
dba: PARK ENGINEERING

4C4E OF 22

C.O. 799S-5

SURVEY PLOTTED BY
DRAWN BY
TRACED BY
DESIGNED BY
QUANTITIES BY
CHECKED BY
DATE

ORIGINAL PLAN
NOTEBOOK
No.

H3XS3 11/04/97 MSC
PHASE-1A RE-PACKAGE

FED. ROAD DIST. NO.	STATE	PROJ. NO.	FISCAL YEAR	SHEET NO.	TOTAL SHEETS
HAWAII	HAW.	I-H3-1(75) UNIT II	1997	C.O. 799S-6	1102

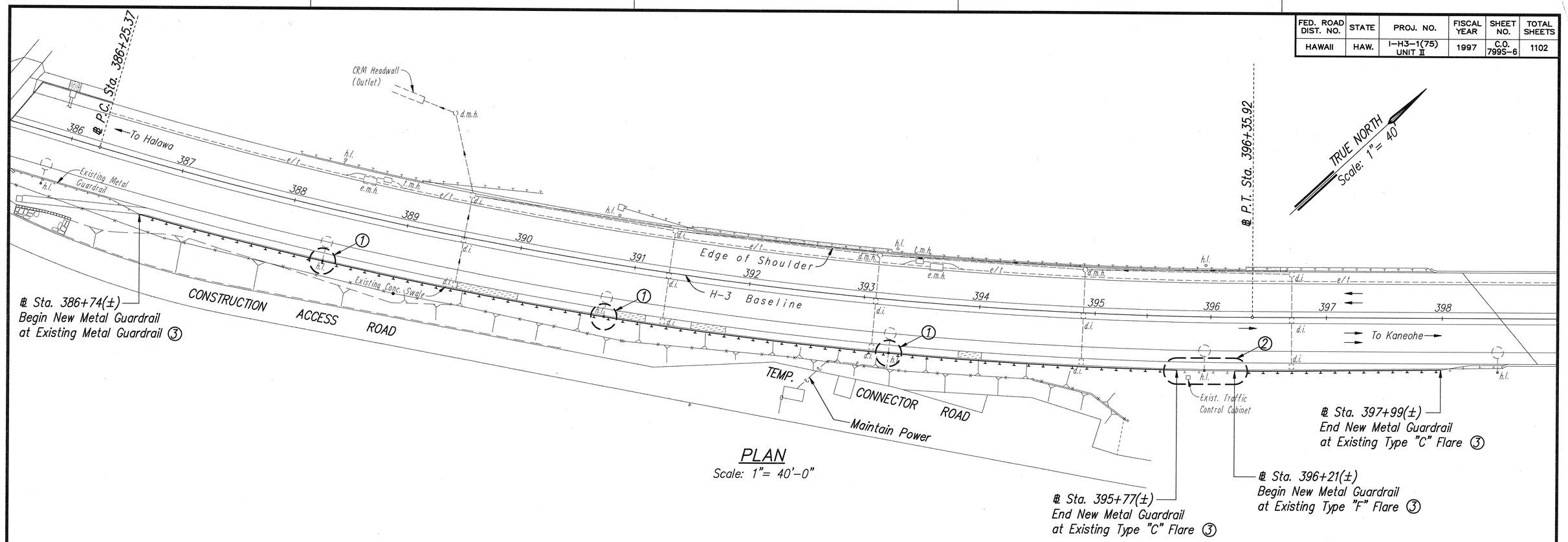

PLAN

Scale: 1"= 40'-0"

LEGEND:

- Existing 6' High Chain Link Fence
- e.m.h. Existing Electric Manhole
- t.m.h. Existing Telephone Manhole
- e/t Existing Electric & Telephone lines
- d.i. Existing Drain Intake & Drain Line
- d.m.h. Existing Drain Manhole & Drain Line
- h.l. Existing Highway Light Standard
- Existing Guardrail
- New Metal Guardrail, Type 3-Single with Rub Rail on Steel Post

NOTES:

1. New guardrail and relocated light standard. See Detail 3 (4C4F | 4C4B)
2. Existing guardrail and light standard. See Detail 2 (4C4A | 4C4B)
3. Remove flare beyond connection. Also remove concrete/GRP anchor.

ORIGINAL PLAN	SURVEY PLOTTED BY	DATE
	DRAWN BY	
NOTE BOOK	TRACED BY	
	DESIGNED BY	
No.	QUANTITIES BY	
	CHECKED BY	

DATE	REVISION
3/3/98	New Sheet Added for Additional Guardrails

REGINALD M. SUZUKA
LICENSED PROFESSIONAL ENGINEER
No. 1462-C
HAWAII, U.S.A.

THIS WORK WAS PREPARED BY ME OR UNDER MY SUPERVISION

Reginald M. Suzuka
ParEng Inc. dba PARK ENGINEERING

STATE OF HAWAII
DEPARTMENT OF TRANSPORTATION
HIGHWAYS DIVISION

NORTH HALAWA VALLEY
ROADWAY CONSTRUCTION

ADD'L. GUARDRAILS PLAN

H-3 FINISH (UNIT II)
FAIP NO. I-H3-1(75), UNIT II
LEEWARD SECTION

SCALE: AS NOTED DATE: OCT. 1997

SHEET No. 4C4F OF 22 SHEETS

LIB: STATE\DOT\H-3\H3FINISH\CO-2
GRALPLN 1/29/98 GHT

C.O. 799S-6

FED. ROAD DIST. NO.	STATE	PROJ. NO.	FISCAL YEAR	SHEET NO.	TOTAL SHEETS
HAWAII	HAW.	I-H3-1(75) UNIT II	1997	800	1102

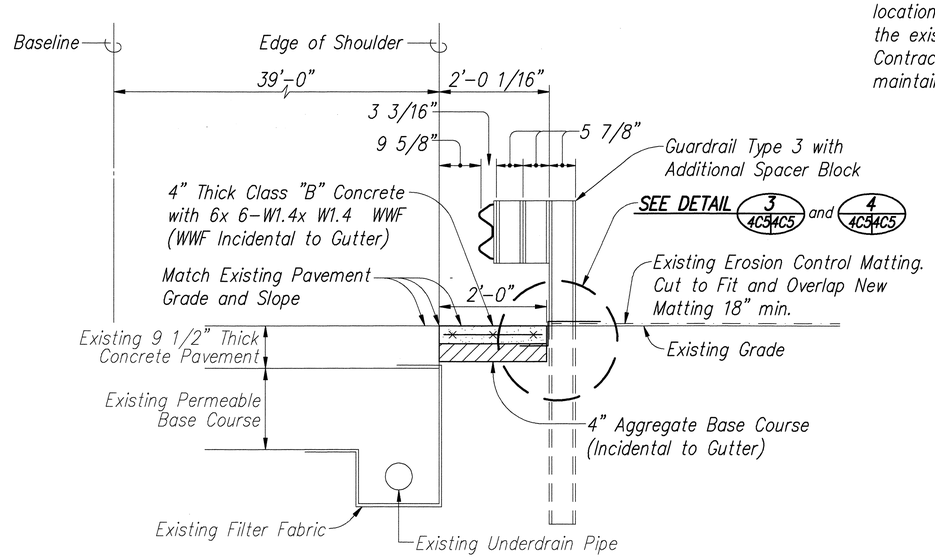

TYPICAL TYPE 2G REVERSE GUTTER 2 4C4 4C5
SCALE: 3/4"= 1'-0"

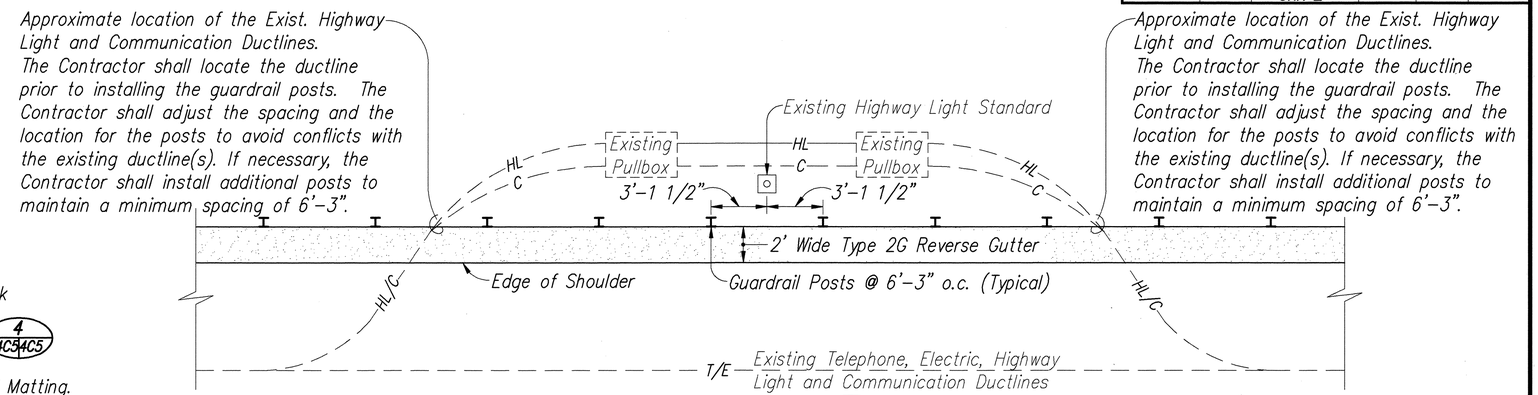

DETAIL 6 4C4 4C5
NOT TO SCALE

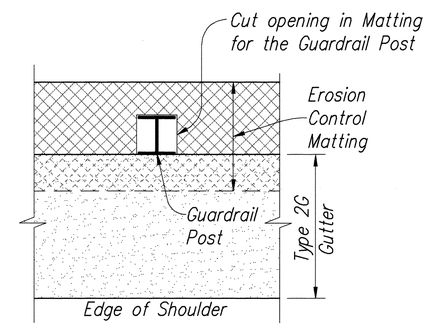

DETAIL 3 4C5 4C5
SCALE: 1"= 1'-0"

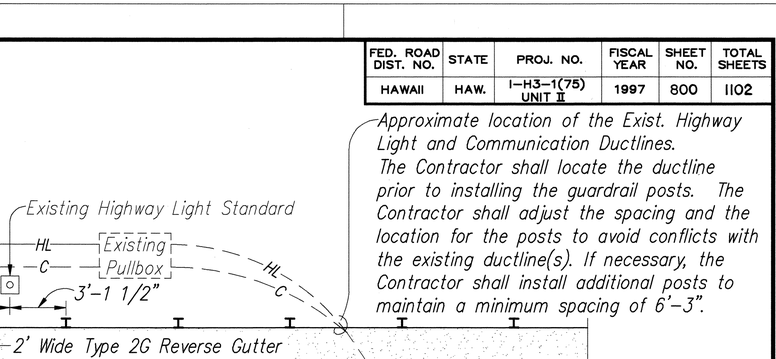

TYPE 2G GUTTER @ STA. 391+40±
DETAIL 7 4C4 4C5
SCALE: 1/2"= 1'-0"

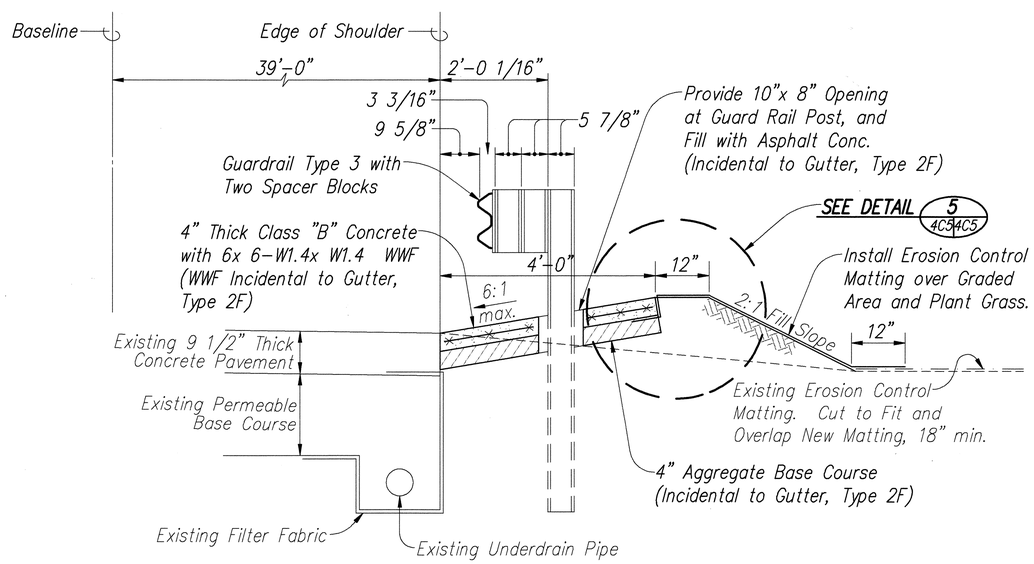

TYPICAL TYPE 2F GUTTER DETAIL 1 4C4 4C5
SCALE: 3/4"= 1'-0"

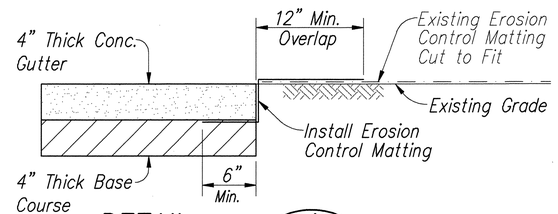

DETAIL 4 4C5 4C5
SCALE: 1 1/2"= 1'-0"

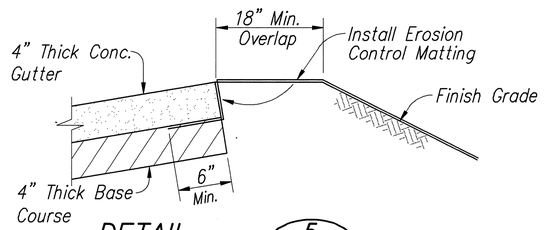

DETAIL 5 4C5 4C5
SCALE: 1 1/2"= 1'-0"

REGINALD M. SUZUKA LICENSED PROFESSIONAL ENGINEER No. 1462-C HAWAII, U.S.A.

THIS WORK WAS PREPARED BY ME OR UNDER MY SUPERVISION

Reginald M. Suzuka
Parsons, Inc.
dba PARK ENGINEERING

STATE OF HAWAII
DEPARTMENT OF TRANSPORTATION
HIGHWAYS DIVISION

NORTH HALAWA VALLEY
ROADWAY CONSTRUCTION

GUTTER AND GUARDRAIL DETAILS

H-3 FINISH (UNIT II)
FAIP NO. I-H3-1(75), UNIT II
LEEWARD SECTION

SCALE: AS NOTED DATE: FEB. 1997

SHEET No. 4C5 OF 22 SHEETS

ORIGINAL PLAN	SURVEY PLOTTED BY	DATE
	DRAWN BY	
	TRACED BY	
NOTE BOOK	DESIGNED BY	
No.	QUANTITIES BY	
	CHECKED BY	

LIB: STATE\01\H3\H3-1\H3\25\25\AIM
GUTDET1 2/11/97 AIM

FED. ROAD DIST. NO.	STATE	PROJ. NO.	FISCAL YEAR	SHEET NO.	TOTAL SHEETS
HAWAII	HAW.	I-H3-1(75) UNIT II	1997	801	1102

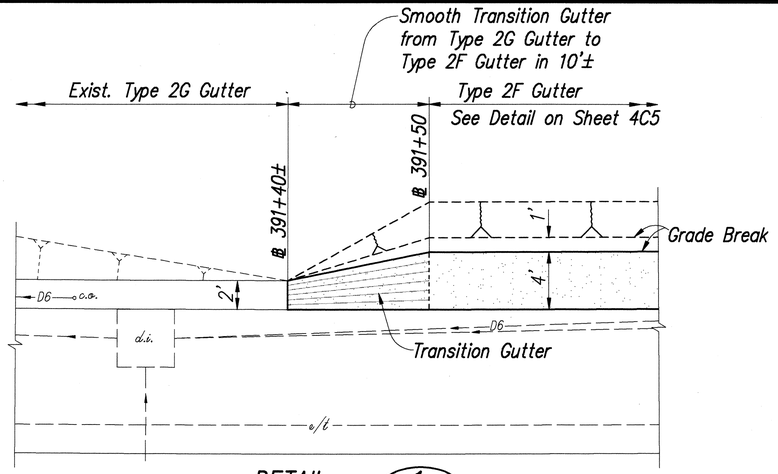

DETAIL 1
Scale: 1"= 5' (4C4|4C6)

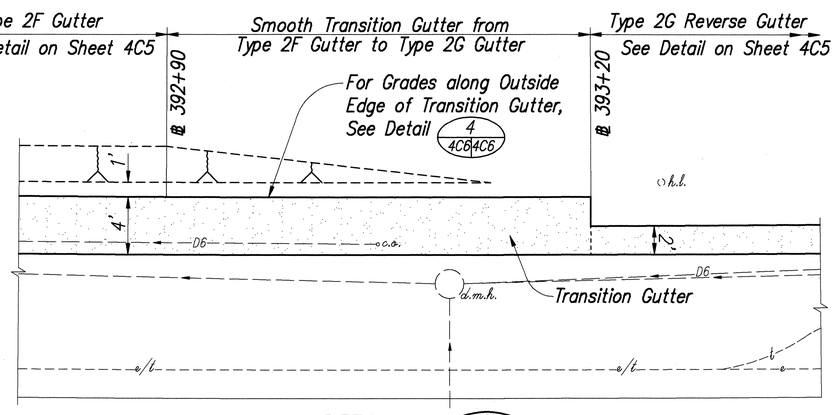

DETAIL 2
Scale: 1"= 5' (4C4|4C6)

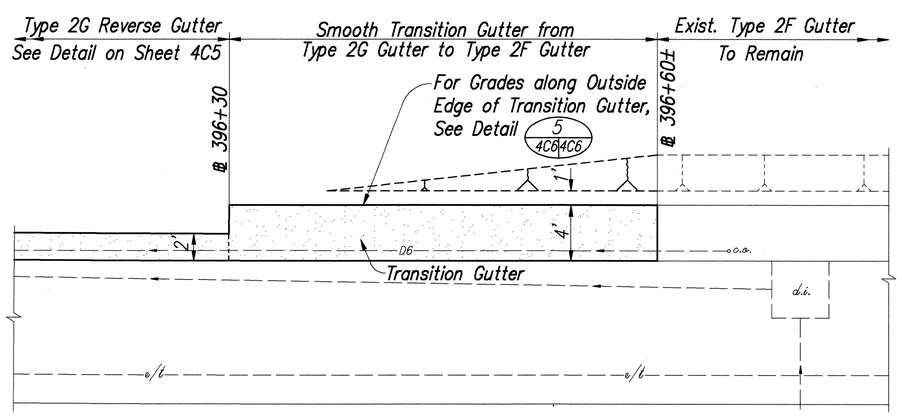

DETAIL 3
Scale: 1"= 5' (4C4|4C6)

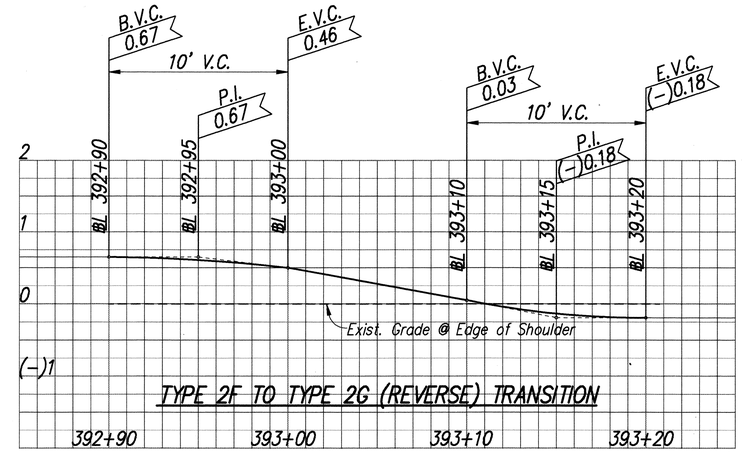

DETAIL 4
Scale: Horiz. 1"= 4' (4C6|4C6)
Vert. 1"= 1'

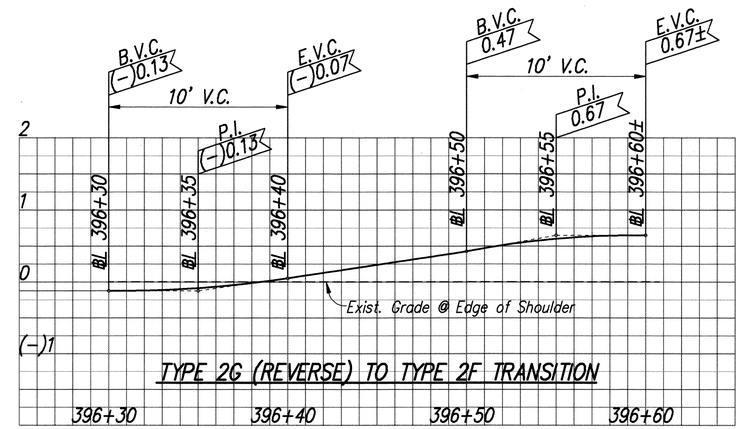

DETAIL 5
Scale: Horiz. 1"= 4' (4C6|4C6)
Vert. 1"= 1'

ORIGINAL PLAN		DATE
NOTE BOOK	SURVEY PLOTTED BY	
	DRAWN BY	
	TRACED BY	
	DESIGNED BY	
	QUANTITIES BY	
No.	CHECKED BY	

REGINALD M. SUZUKA
LICENSED PROFESSIONAL ENGINEER
No. 1462-C
HAWAII, U.S.A.

THIS WORK WAS PREPARED BY ME OR UNDER MY SUPERVISION

Reginald M. Suzuka
PacCo, Inc.
dba PARK ENGINEERING

STATE OF HAWAII
DEPARTMENT OF TRANSPORTATION
HIGHWAYS DIVISION

NORTH HALAWA VALLEY
ROADWAY CONSTRUCTION

GUTTER AND GUARDRAIL DETAILS

H-3 FINISH (UNIT II)
FAIP NO. I-H3-1(75), UNIT II
LEEWARD SECTION

SCALE: AS NOTED DATE: FEB. 1997

SHEET No. 4C6 OF 22 SHEETS

801

LB: STATE\DOT\H-3\H3052\H3FINISH\
GUTDET2 2/21/97 AMM

FED. ROAD DIST. NO.	STATE	PROJ. NO.	FISCAL YEAR	SHEET NO.	TOTAL SHEETS
HAWAII	HAW.	I-H3-1(75) UNIT II	1997	802	1102

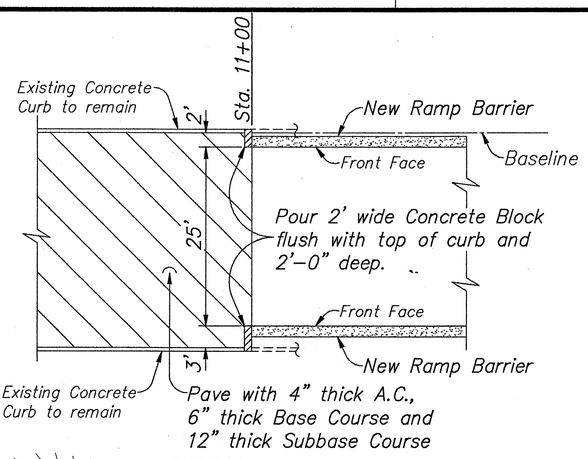

DETAIL (2 / 4C7\4C7)
Scale: 1"=10'

Install Vehicle Arresting Barrier
Net 1 @ Sta. 5+80
Net 2 @ Sta. 6+30
Net 3 @ Sta. 6+50
Net 4 @ Sta. 6+70
Net 5 @ Sta. 6+90
Net 6 @ Sta. 7+80
Net 7 @ Sta. 8+30
Net 8 @ Sta. 8+50
Net 9 @ Sta. 8+70
Net 10 @ Sta. 8+90
Net 11 @ Sta. 9+80

6" Perforated Underdrain Pipe
Sta. 5+50 (Lt.) to Sta. 7+50 (Lt.)
Sta. 7+55 (Lt.) to Sta. 9+65 (Lt.)
Sta. 9+70 (Lt.) to Sta. 10+95 (Lt.)

Cleanouts
Sta. 5+50 (Lt.)
Sta. 7+50 (Lt.)
Sta. 7+55 (Lt.)
Sta. 9+65 (Lt.)
Sta. 9+70 (Lt.)
Sta. 10+95 (Lt.)

Ramp Barrier
Sta. 4+51 (Rt.) to Sta. 11+00 (Rt.)
Sta. 4+80 (Lt.) to Sta. 11+00 (Lt.)

Remove Existing Guardrail
(Type 3-Single w/Steel Post)
Sta. 4+38 (Lt.) to Sta. 11+00 (Lt.)

Remove and Relocate Existing Guardrail
Sta. 2+65 (Rt.) to Sta. 5+50 (Rt.)

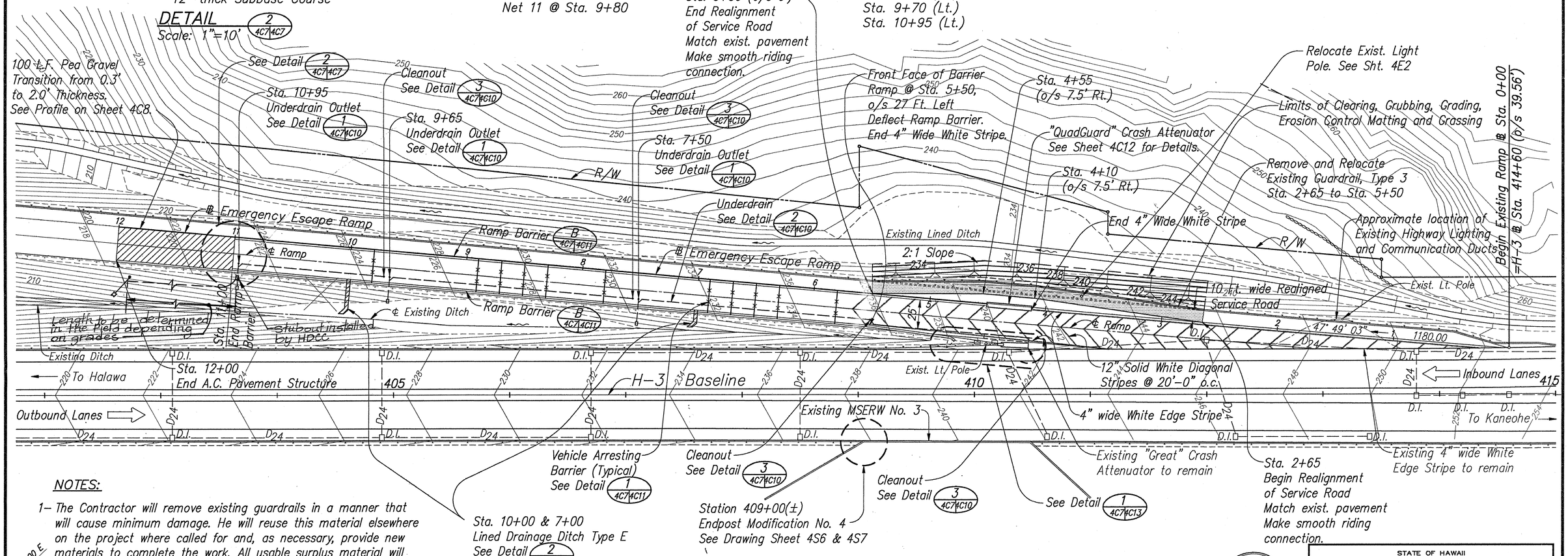

NOTES:

1- The Contractor will remove existing guardrails in a manner that will cause minimum damage. He will reuse this material elsewhere on the project where called for and, as necessary, provide new materials to complete the work. All usable surplus material will be hauled to the Department's base yard in Pearl City. Unusable material will be disposed of by the Contractor.

2- Ramp Barrier Transitions and Endpost for Guardrail Connections shall be incidental to the cost of the Ramp Barrier.

3- See sheet 4C8 for profile of Emergency Escape Ramp.

PLAN - EMERGENCY ESCAPE RAMP
SCALE: 1" = 40'

DATE	REVISION
3/21/97	ADD LINED DRAINAGE DITCH TYPE E AT STATIONS 7+00 AND 10+00 (LEFT SIDE)

REGINALD M. SUZUKA LICENSED PROFESSIONAL ENGINEER No. 1462-C HAWAII, U.S.A.

THIS WORK WAS PREPARED BY ME OR UNDER MY SUPERVISION
Reginald M. Suzuka
PORTA, INC. dba PARK ENGINEERING

STATE OF HAWAII
DEPARTMENT OF TRANSPORTATION
HIGHWAYS DIVISION
NORTH HALAWA VALLEY
ROADWAY CONSTRUCTION
EMERGENCY ESCAPE RAMP PLAN
H-3 FINISH (UNIT II)
FAIP NO. I-H3-1(75), UNIT II
LEEWARD SECTION
SCALE: AS NOTED DATE: FEB. 1997
SHEET No. 4C7 OF 22 SHEETS

ORIGINAL PLAN | NOTE BOOK No. | SURVEY PLOTTED BY | DRAWN BY | TRACED BY | DESIGNED BY | QUANTITIES BY | CHECKED BY | DATE

LIB: STATE\DOT\H-3\H3FINISH\ADDENDUM
ADDPLAN 4/3/97 RMS

ADD. 802

FED. ROAD DIST. NO.	STATE	PROJ. NO.	FISCAL YEAR	SHEET NO.	TOTAL SHEETS
HAWAII	HAW.	I-H3-1(75) UNIT II	1997	803	1102

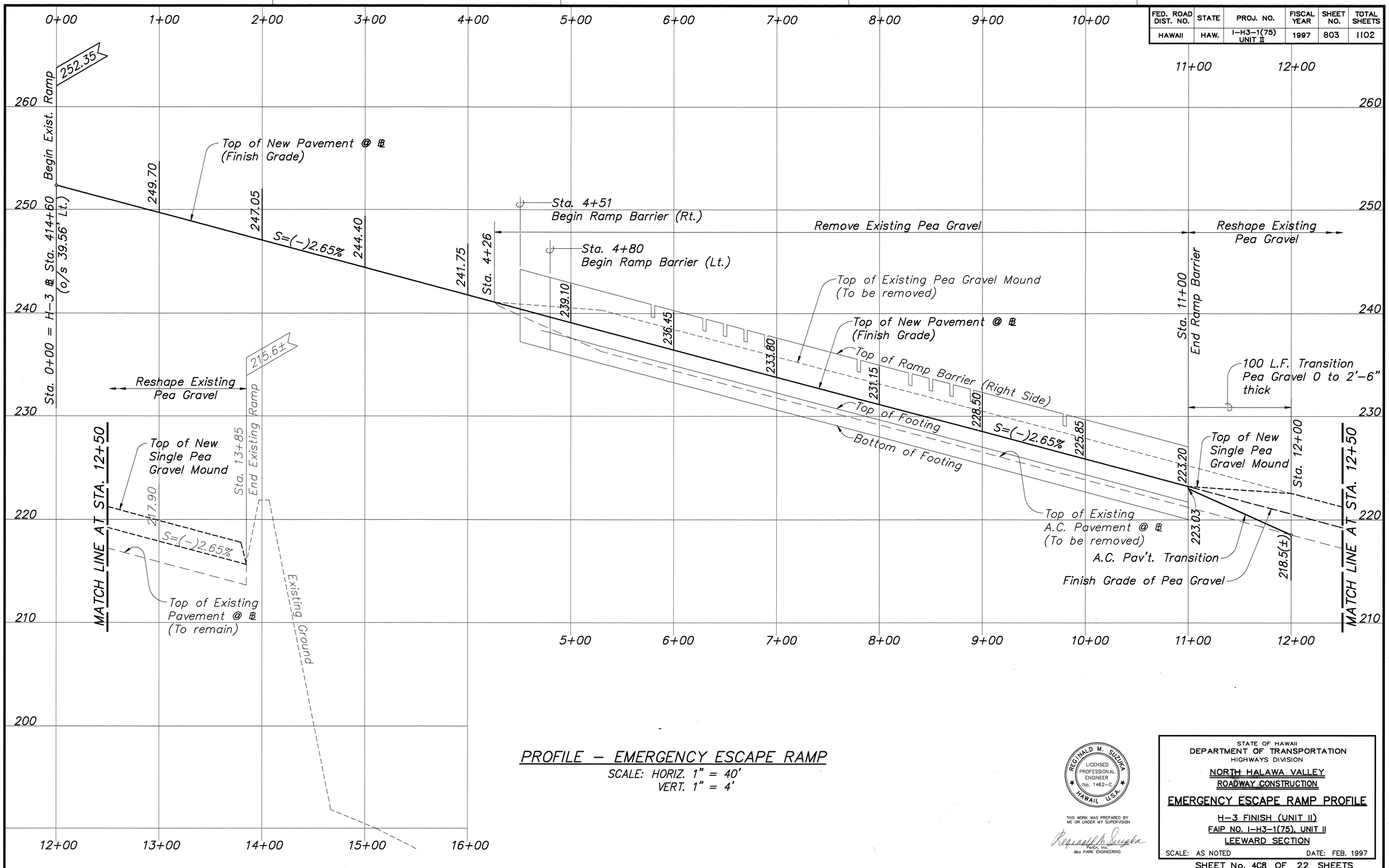

PROFILE – EMERGENCY ESCAPE RAMP

SCALE: HORIZ. 1" = 40'
VERT. 1" = 4'

ORIGINAL PLAN		DATE
	SURVEY PLOTTED BY	
	TRACED BY	"
NOTE BOOK	DESIGNED BY	"
	QUANTITIES BY	"
No.	CHECKED BY	"

REGINALD M. SUZUKA
LICENSED PROFESSIONAL ENGINEER
No. 1462-C
HAWAII, U.S.A.

THIS WORK WAS PREPARED BY ME OR UNDER MY SUPERVISION

Reginald M. Suzuka
PorEn, Inc.
dba PARK ENGINEERING

STATE OF HAWAII
DEPARTMENT OF TRANSPORTATION
HIGHWAYS DIVISION

NORTH HALAWA VALLEY
ROADWAY CONSTRUCTION

EMERGENCY ESCAPE RAMP PROFILE

H-3 FINISH (UNIT II)
FAIP NO. I-H3-1(75), UNIT II
LEEWARD SECTION

SCALE: AS NOTED DATE: FEB. 1997

SHEET No. 4C8 OF 22 SHEETS

LIB: STATE\DOT\I-3\V3052\H3FINISH\
RAMPPROI 2/13/97 AMM

FED. ROAD DIST. NO.	STATE	PROJ. NO.	FISCAL YEAR	SHEET NO.	TOTAL SHEETS
HAWAII	HAW.	I-H3-1(75) UNIT II	1997	804	1102

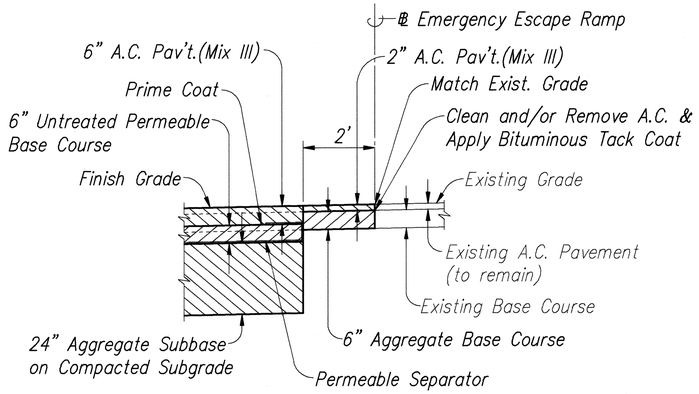

PAVEMENT CONNECTION (1 / 4C9 4C9)

Scale: 1/2"= 1'-0"

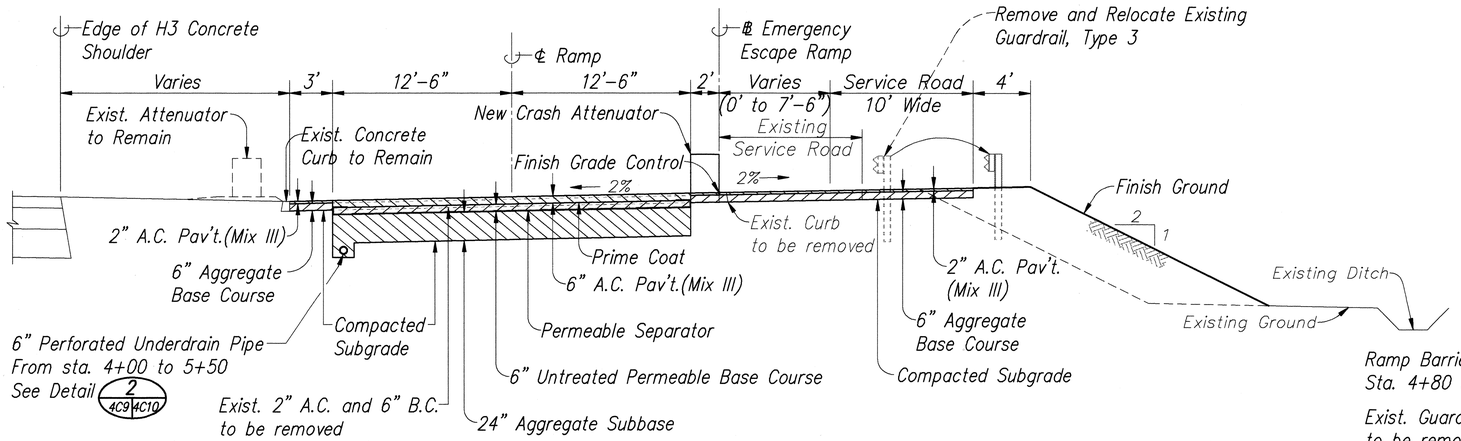

TYPICAL ROAD SECTION STA. 2+65 TO STA. 5+50

Scale: 1"= 5'-0"

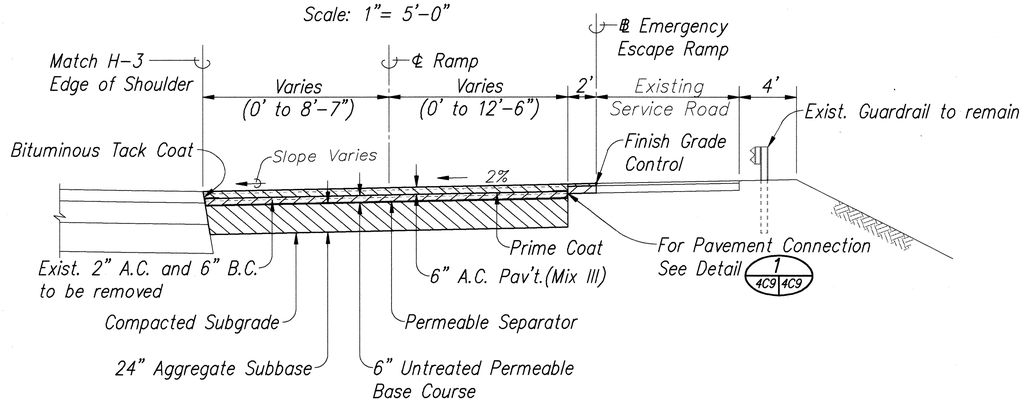

TYPICAL ROAD SECTION STA. 0+00 TO STA. 2+65

Scale: 1"= 5'-0"

Note:
Transition New Pea Gravel Mound from 0" to 2'-6" between Sta. 11+00 to 12+00.

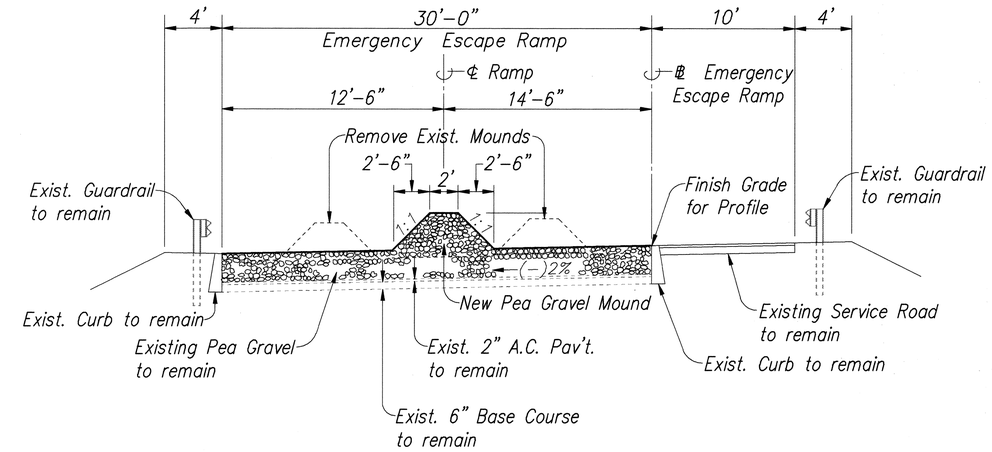

TYPICAL ROAD SECTION STA. 12+00 TO 13+85

Scale: 1"= 5'-0"

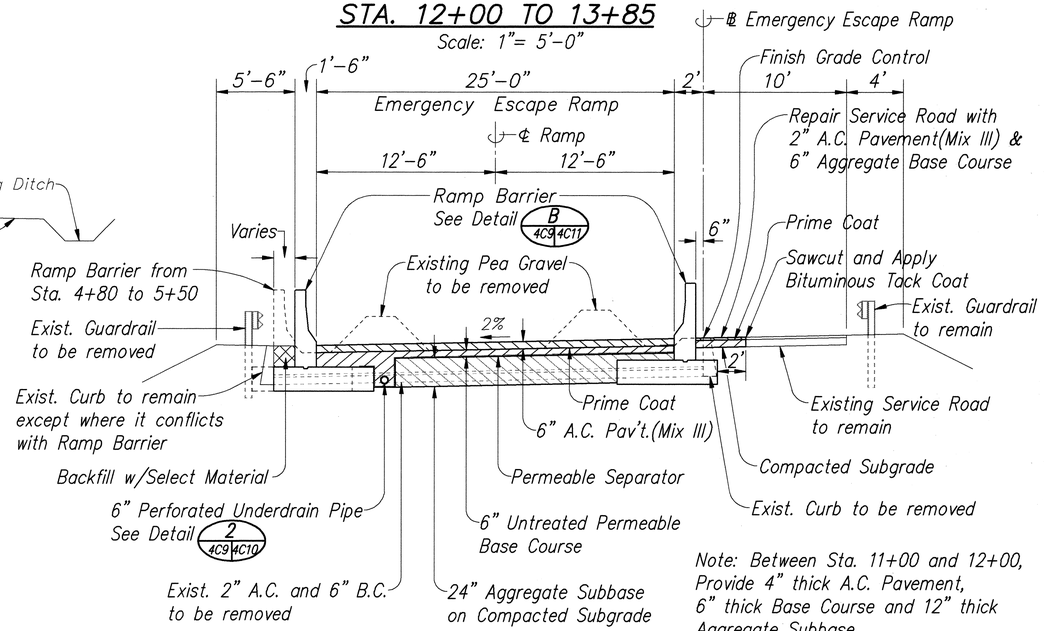

Note: Between Sta. 11+00 and 12+00, Provide 4" thick A.C. Pavement, 6" thick Base Course and 12" thick Aggregate Subbase.

TYPICAL ROAD SECTION STA. 5+50 TO 11+00

Scale: 1"= 5'-0"

EMERGENCY ESCAPE RAMP

Scale: 1"= 5'-0"

REGINALD M. SUZUKA LICENSED PROFESSIONAL ENGINEER No. 1462-C HAWAII U.S.A.

THIS WORK WAS PREPARED BY ME OR UNDER MY SUPERVISION

Reginald M. Suzuka
ParEn, Inc.
dba PARK ENGINEERING

STATE OF HAWAII
DEPARTMENT OF TRANSPORTATION
HIGHWAYS DIVISION

NORTH HALAWA VALLEY
ROADWAY CONSTRUCTION

EMERGENCY ESCAPE RAMP SECTIONS

H-3 FINISH (UNIT II)
FAIP NO. I-H3-1(75), UNIT II
LEEWARD SECTION

SCALE: AS NOTED DATE: FEB. 1997

SHEET No. 4C9 OF 22 SHEETS

ORIGINAL PLAN			
	SURVEY PLOTTED BY		DATE
	DRAWN BY		
	TRACED BY		
NOTE BOOK	DESIGNED BY		
	QUANTITIES BY		
No.	CHECKED BY		

LIB: STATE\DOT\H-3\3052\H3FINISH\
RAMPSECT 2/21/97 AMM

FED. ROAD DIST. NO.	STATE	PROJ. NO.	FISCAL YEAR	SHEET NO.	TOTAL SHEETS
HAWAII	HAW.	I-H3-1(75) UNIT II	1997	805	1102

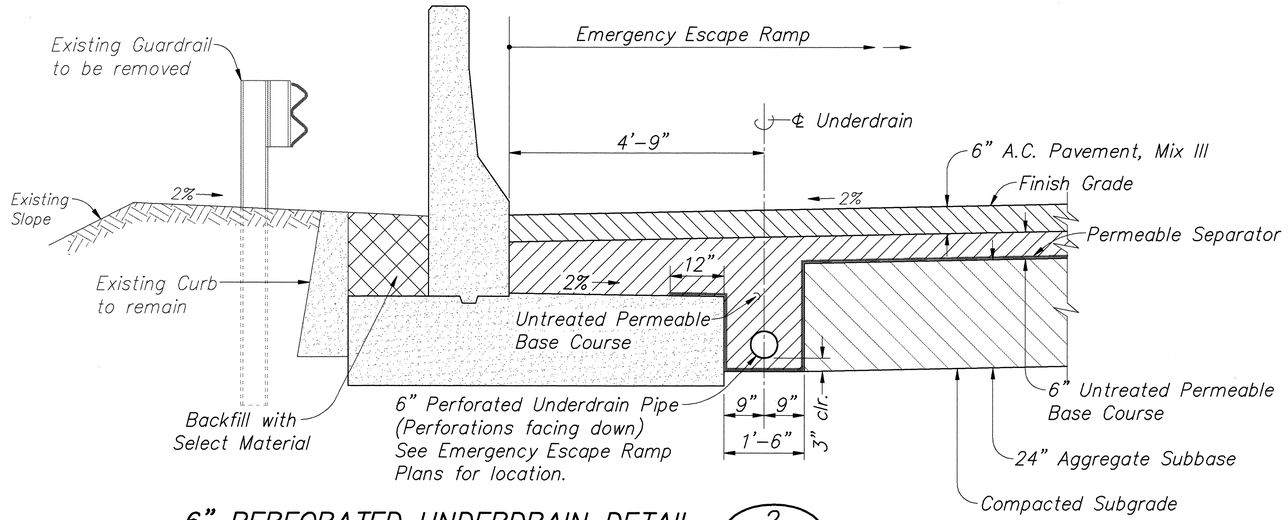

6" PERFORATED UNDERDRAIN DETAIL (2)

Scale: 3/4"= 1'-0"

4C7, 4C9 4C10

(IB Sta. 525+75±)

EMERGENCY ESCAPE RAMP

[*]

[2] Cover "1" with overlay panel shown. Overlay panel shall be 8" black number with yellow reflectorized background.

MODIFICATION TO SIGN AT IB STA. 525+75±

N.T.S.

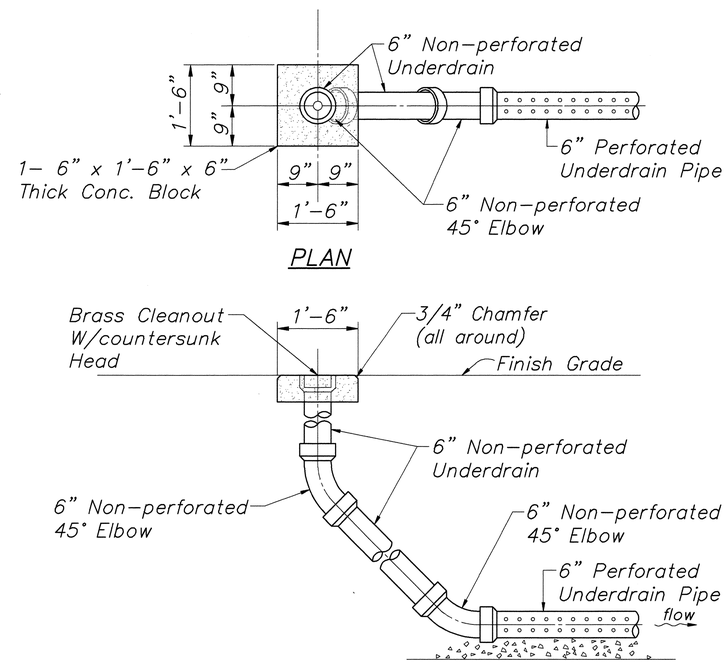

TYPICAL UNDERDRAIN CLEANOUT DETAIL (3)

Scale: 3/4"= 1'-0"

4C7 4C10

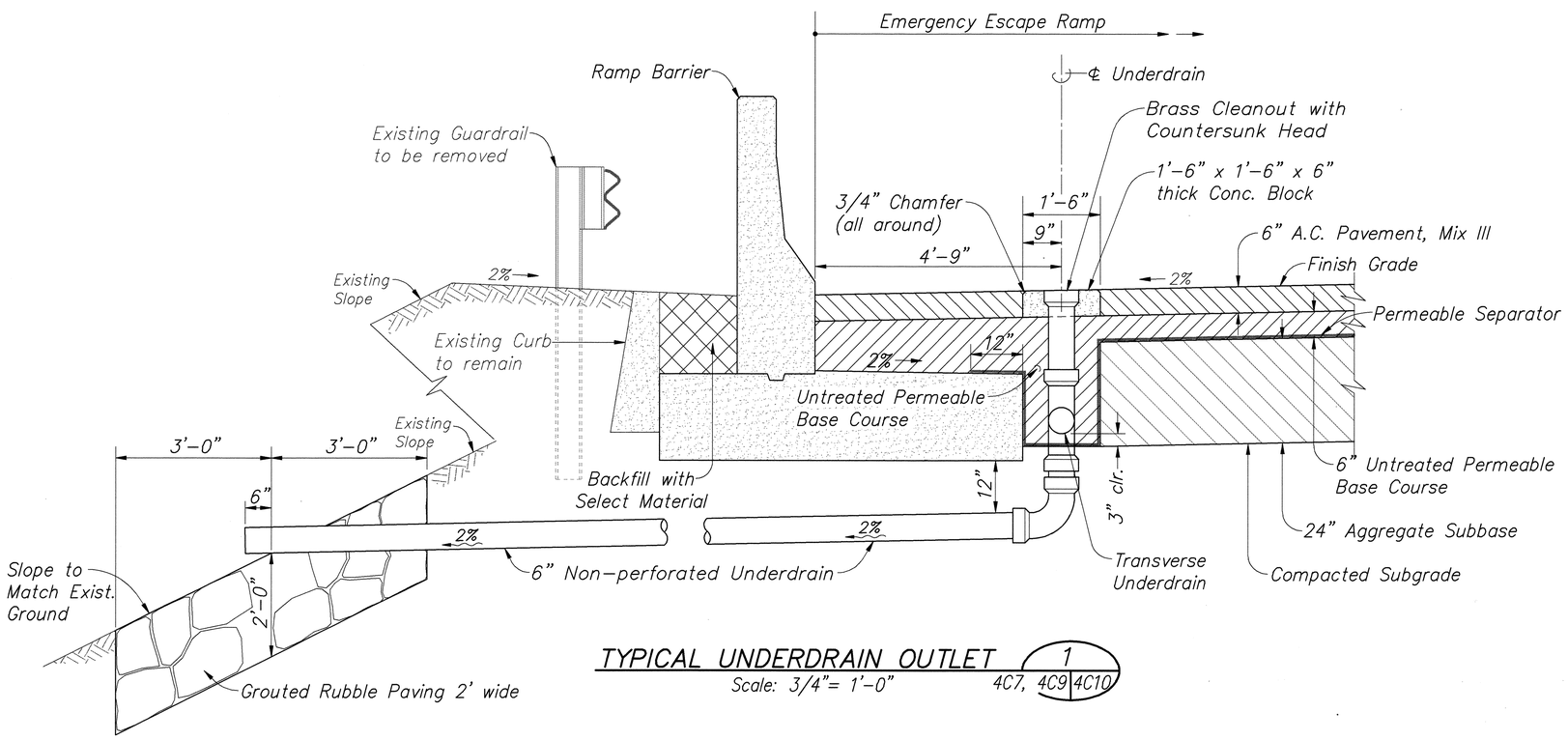

TYPICAL UNDERDRAIN OUTLET (1)

Scale: 3/4"= 1'-0"

4C7, 4C9 4C10

REGINALD M. SUZUKA LICENSED PROFESSIONAL ENGINEER No. 1462-C HAWAII, U.S.A.

THIS WORK WAS PREPARED BY ME OR UNDER MY SUPERVISION

PorEn, Inc. dba PARK ENGINEERING

STATE OF HAWAII
DEPARTMENT OF TRANSPORTATION
HIGHWAYS DIVISION

NORTH HALAWA VALLEY
ROADWAY CONSTRUCTION

EMERGENCY ESCAPE RAMP DETAILS

H-3 FINISH (UNIT II)
FAIP NO. I-H3-1(75), UNIT II
LEEWARD SECTION

SCALE: AS NOTED DATE: FEB. 1997

SHEET No. 4C10 OF 22 SHEETS

ORIGINAL PLAN | SURVEY PLOTTED BY | DRAWN BY | TRACED BY | DESIGNED BY | QUANTITIES BY | CHECKED BY | DATE | NOTE BOOK | No.

LIB: STATE\DOT\H-3\H3052\H3FINISH\ RAMPDET2 2/11/97 AMM

FED. ROAD DIST. NO.	STATE	PROJ. NO.	FISCAL YEAR	SHEET NO.	TOTAL SHEETS
HAWAII	HAW.	I-H3-1(75) UNIT II	1997	806	1102

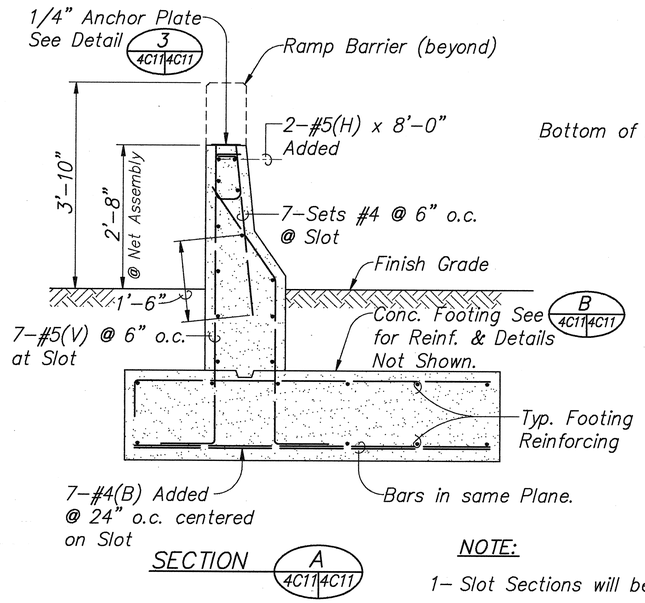

SECTION A 4C11/4C11

NOTE:

1- Slot Sections will be paid under Ramp Barrier.

2- Net Assembly shall be Normal to Finish Grade.

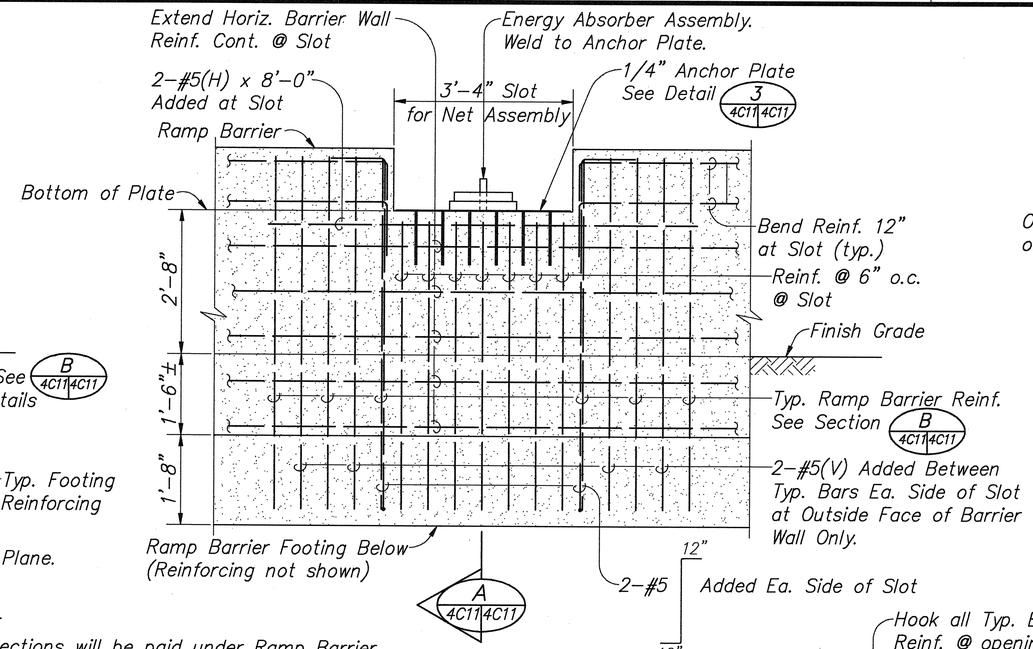

ELEVATION A 4C11/4C11

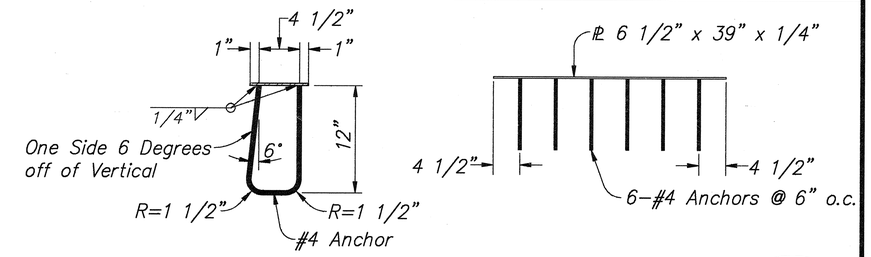

ANCHOR PLATE FOR NET/ENERGY ABSORBER 3 4C11/4C11

Scale: 3/4"= 1'-0"

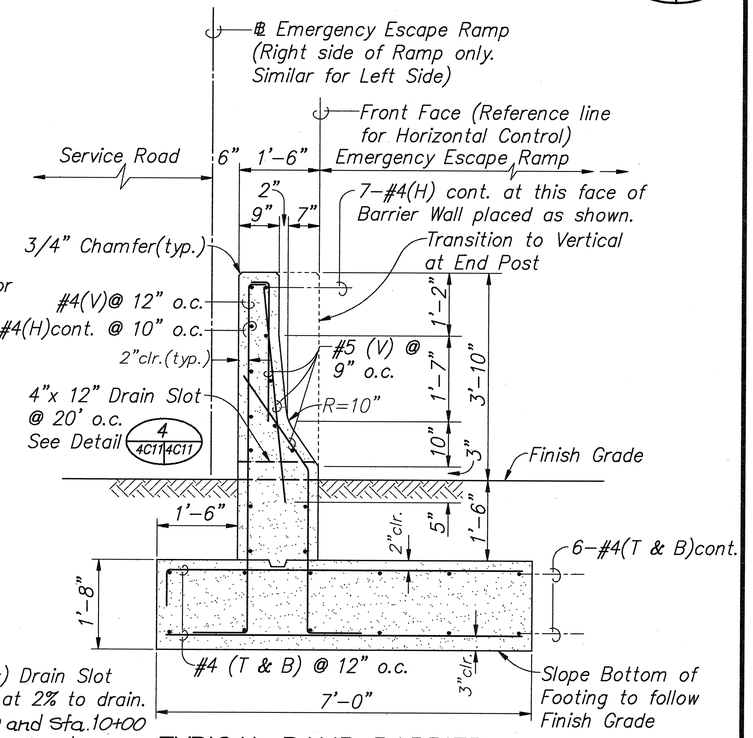

TYPICAL RAMP BARRIER AND TRANSITION SECTION B 4C7, 4C9, 4C11/4C11

Scale: 3/4"= 1'-0"

Note: Transition Section to be Paid for under Pay Item Ramp Barrier.

NET ASSEMBLY SLOT FOR ENERGY ABSORBER 2 4C11/4C11

Scale: 3/4"= 1'-0"

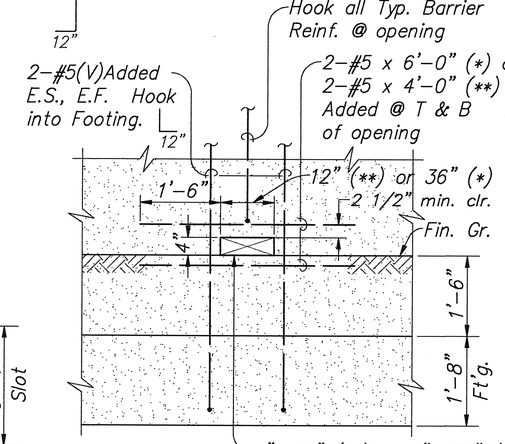

(*) For Left Side Ramp Barrier at Sta. 7+00 and Sta. 10+00

(**) For Right Side Ramp Barrier at Spacing of 20' o.c.

DRAIN SLOT DETAIL 4 4C11, 4C13/4C11

N.T.S.

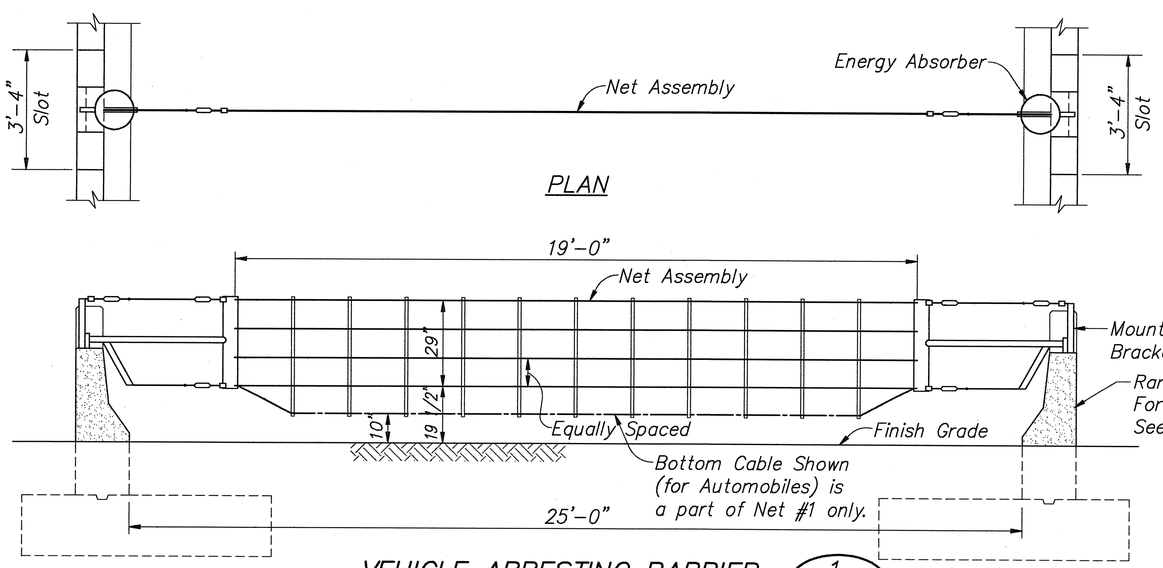

PLAN

VEHICLE ARRESTING BARRIER 1 4C7/4C11

Not to Scale

*Construction JT. @ Right Side only

EXPANSION JTS.(LT.&RT.) JOIN AT STATIONS	CONTRACTION JTS. (LT.&RT.)@ STATIONS	
5+15	4+85*	8+15
6+05	5+45	8+45
6+95	5+75	9+05
7+85	6+35	9+35
8+75	6+65	9+95
9+65	7+25	10+25
10+55	7+55	

EXPANSION AND CONTRACTION JOINT LOCATIONS

DATE	REVISION
3/21/97	REVISE DETAIL 4/4C11/4C11 FOR 4"x 36" DRAIN SLOT THRU RAMP BARRIER.

REGINALD M. SUZUKA LICENSED PROFESSIONAL ENGINEER No. 1462-C HAWAII, U.S.A.

THIS WORK WAS PREPARED BY ME OR UNDER MY SUPERVISION

Reginald M. Suzuka
PaRen, Inc.
dba PARK ENGINEERING

STATE OF HAWAII
DEPARTMENT OF TRANSPORTATION
HIGHWAYS DIVISION

NORTH HALAWA VALLEY
ROADWAY CONSTRUCTION

EMERGENCY ESCAPE RAMP DETAILS

H-3 FINISH (UNIT II)
FAIP NO. I-H3-1(75), UNIT II
LEEWARD SECTION

SCALE: AS NOTED DATE: FEB. 1997

SHEET No. 4C11 OF 22 SHEETS

ORIGINAL PLAN | SURVEY PLOTTED BY | DRAWN BY | TRACED BY | DESIGNED BY | QUANTITIES BY | CHECKED BY | NOTE BOOK | No. | DATE

LIB: STATE\DOT\H-3\HSFNSH\ADDENDUM
ADDDET1 3/27/97 AMM

ADD. 806

FED. ROAD DIST. NO.	STATE	PROJ. NO.	FISCAL YEAR	SHEET NO.	TOTAL SHEETS
HAWAII	HAW.	I-H3-1(75) UNIT II	1997	807	1102

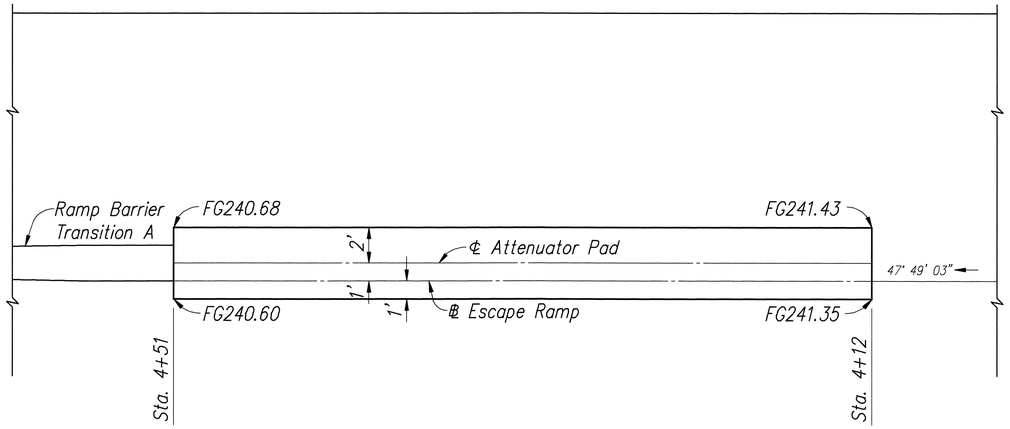

ATTENUATOR PAD GRADING PLAN (2 / 4C12 | 4C12)

Scale: 1/4"= 1'-0"

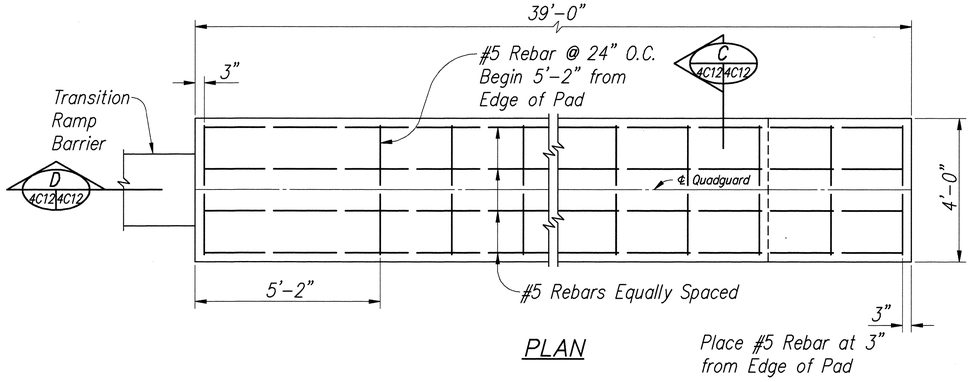

PLAN

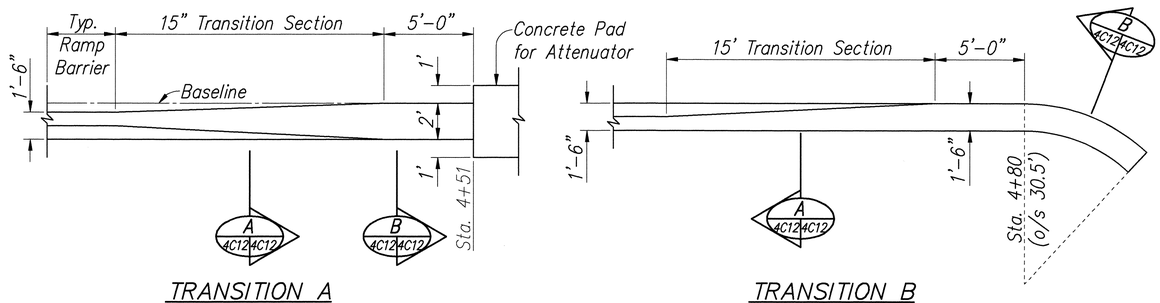

TRANSITION A

Scale: 1/4"= 1'-0"

TRANSITION B

Scale: 1/4"= 1'-0"

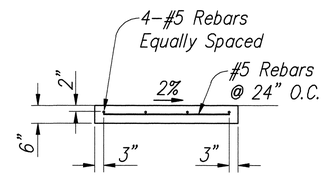

SECTION C (4C12 | 4C12)

Notes:

1. Attenuator shall be the QuadGuard System or Accepted Equivalent.
2. Additional Design & Details Required for the Installation of the QuadGuard System shall be Provided by the Manufacturer.
3. The Installation of the QuadGuard System and all Appurtenances shall be according to the Manufacturer's Recommendations and Requirements.

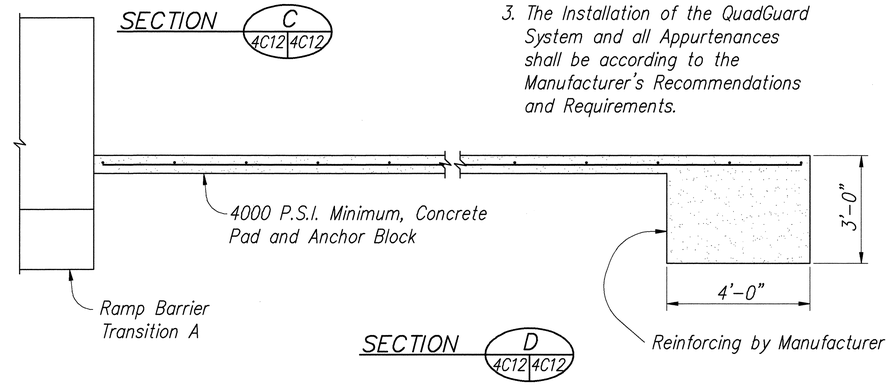

SECTION D (4C12 | 4C12)

CONCRETE PAD FOR ATTENUATOR DETAIL (3 / 4C12 | 4C12)

Scale: 1/2"= 1'-0"

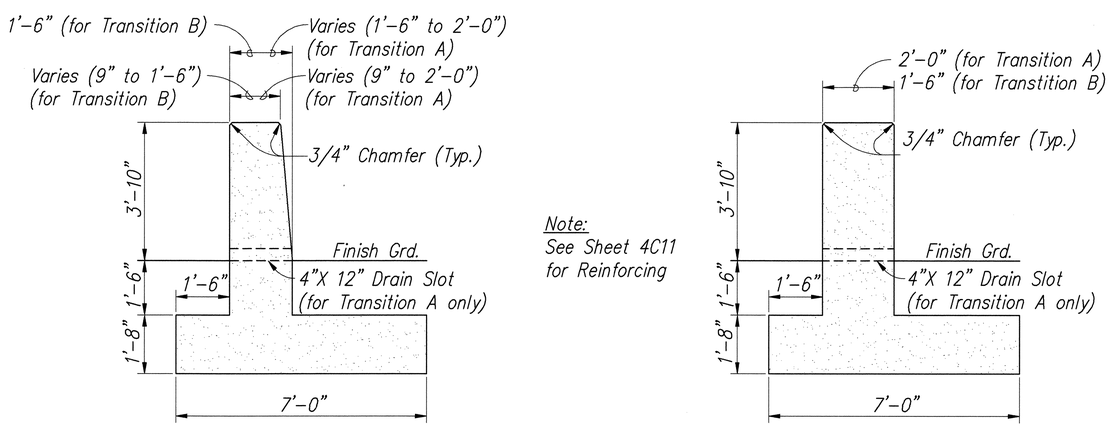

Note:
See Sheet 4C11
for Reinforcing

SECTION A (4C12 | 4C12)

Scale: 1/2"= 1'-0"

SECTION B (4C12 | 4C12)

Scale: 1/2"= 1'-0"

PLAN – RAMP BARRIER TRANSITIONS (1 / 4C12,4C13 | 4C12)

ORIGINAL PLAN		
NOTE BOOK	No.	

SURVEY PLOTTED BY
DRAWN BY
TRACED BY
DESIGNED BY
QUANTITIES BY
CHECKED BY
DATE

REGINALD M. SUZUKA
LICENSED PROFESSIONAL ENGINEER
No. 1462-C
HAWAII, U.S.A.

THIS WORK WAS PREPARED BY ME OR UNDER MY SUPERVISION

Reginald M. Suzuka
PoEn, Inc.
dba PARK ENGINEERING

STATE OF HAWAII
DEPARTMENT OF TRANSPORTATION
HIGHWAYS DIVISION

NORTH HALAWA VALLEY
ROADWAY CONSTRUCTION

MISCELLANEOUS DETAILS

H-3 FINISH (UNIT II)
FAIP NO. I-H3-1(75), UNIT II
LEEWARD SECTION

SCALE: AS NOTED DATE: FEB. 1997

SHEET No. 4C12 OF 22 SHEETS

LIB: STATE\DOT\H-3\H3052\H3FINISH\
PADATTEN 2/1/97 GHT

FED. ROAD DIST. NO.	STATE	PROJ. NO.	FISCAL YEAR	SHEET NO.	TOTAL SHEETS
HAWAII	HAW.	I-H3-1(75) UNIT II	1997	808	1102

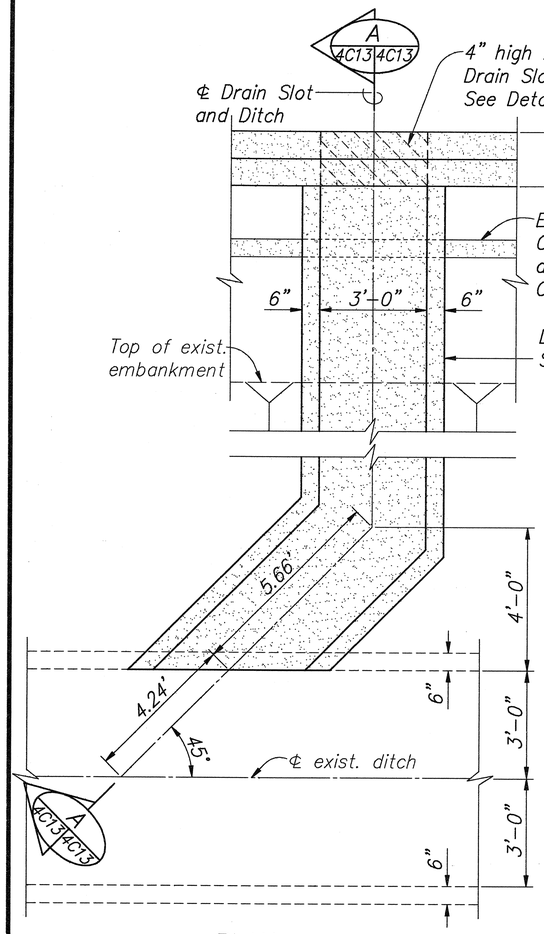

PLAN

TYPE E DITCH 2 4C7 4C13
Scale: 1/2"= 1'-0"

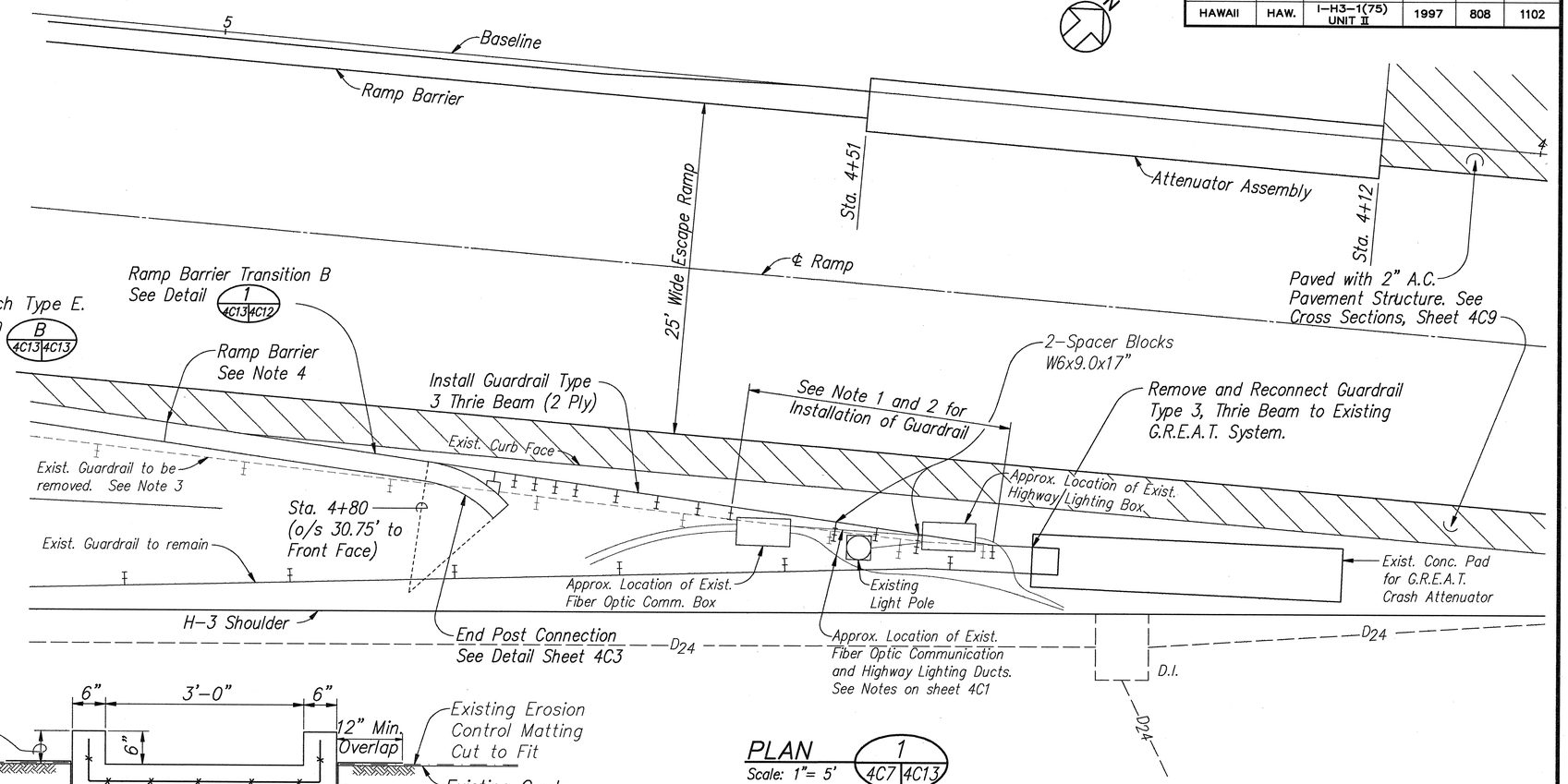

PLAN 1 4C7 4C13
Scale: 1"= 5'

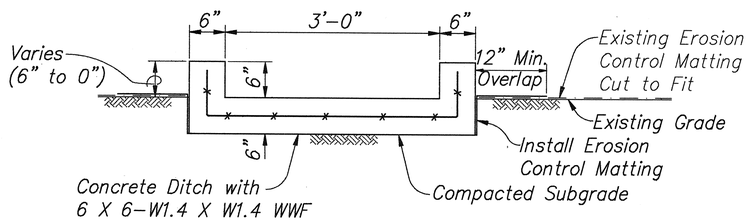

TYPICAL SECTION B 4C13 4C13
Scale: 1"= 1'-0"

NOTES:

1. The locations shown for the guardrail posts are only approximate. The Contractor shall determine the exact locations prior to installing the posts by probing and locating the existing lighting and communication ducts. The Contractor is advised that he will not be allowed to relocate the existing ducts. He will therefore make field adjustments as deemed necessary and appropriate to fit the field conditions.
2. Provide additional W6x9.0x17" Spacer Blocks where necessary.
3. Repair A.C. Pavement damaged by removal of Guardrail Posts.
4. Repair A.C. Pavement damaged by construction of Ramp Barrier.

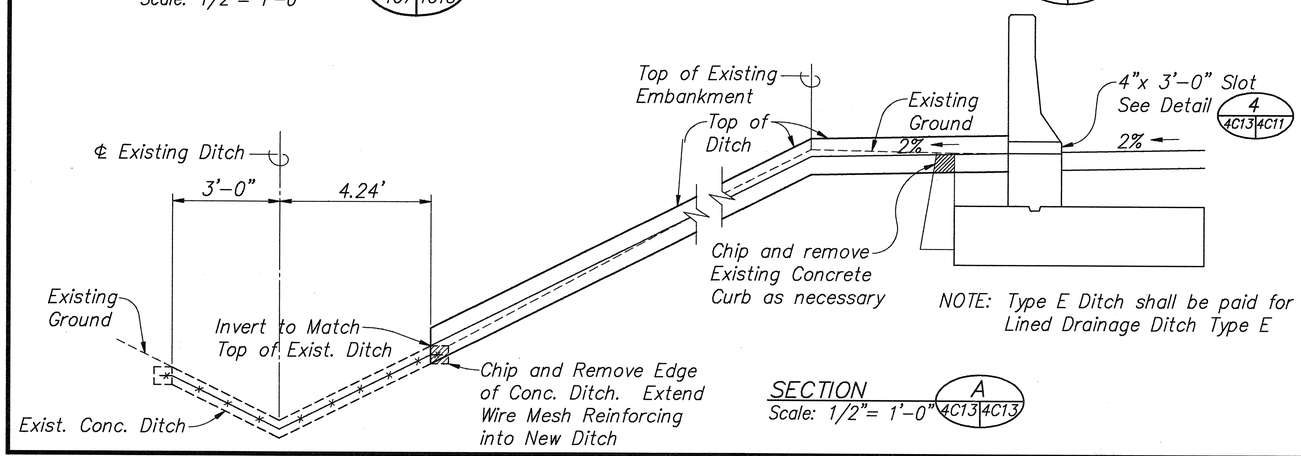

NOTE: Type E Ditch shall be paid for under Lined Drainage Ditch Type E

SECTION A 4C13 4C13
Scale: 1/2"= 1'-0"

ORIGINAL PLAN	SURVEY PLOTTED BY	DATE
	DRAWN BY	
NOTE BOOK	TRACED BY	
	DESIGNED BY	
No.	QUANTITIES BY	
	CHECKED BY	

DATE	REVISION
3/21/97	ADD LINED DRAINAGE DITCH TYPE E AT STATIONS 7+00 AND 10+00 (LEFT SIDE)

REGINALD M. SUZUKA LICENSED PROFESSIONAL ENGINEER No. 1462-C HAWAII, U.S.A.

THIS WORK WAS PREPARED BY ME OR UNDER MY SUPERVISION

Reginald M. Suzuka
Pacon, Inc. dba PARK ENGINEERING

STATE OF HAWAII
DEPARTMENT OF TRANSPORTATION
HIGHWAYS DIVISION

NORTH HALAWA VALLEY
ROADWAY CONSTRUCTION

MISCELLANEOUS DETAILS

H-3 FINISH (UNIT II)
FAIP NO. I-H3-1(75), UNIT II
LEEWARD SECTION

SCALE: AS NOTED DATE: FEB. 1997

SHEET No. 4C13 OF 22 SHEETS

LIB: STATE\DOT\H-3\H3FINISH\ADDDGN
ADDPLN1 4/3/97 RMS

ADD. 808

FED. ROAD DIST. NO.	STATE	FED. AID PROJ. NO.	FISCAL YEAR	SHEET NO.	TOTAL SHEETS
HAWAII	HAW.	I-H3-1(75), UNIT II	1997	809	1102

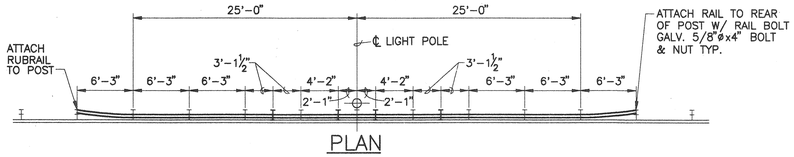

PLAN

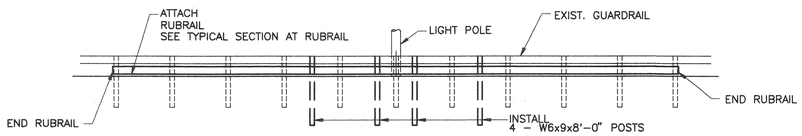

ELEVATION

DETAIL OF BEAM TYPE GUARDRAIL W/ RUBRAIL
SCALE: 1/8" = 1'-0"
(SEE TABLE 1)

TABLE 1

LIGHT POLE NUMBER	℄ STATION	SIDE (LOOKING UPSTATION)
86	480+45	LEFT
110	512+15	LEFT
123	529+84	RIGHT
125	532+15	RIGHT
127	534+65	RIGHT

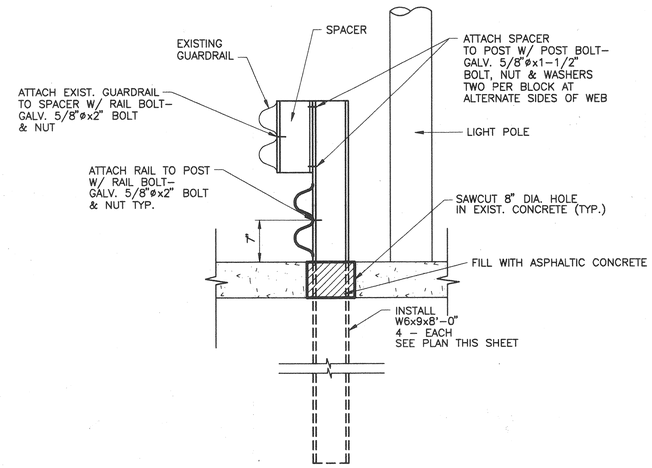

TYPICAL SECTION AT
W6x9x8'-0" POST WITH RUBRAIL
SCALE: 1" = 1'-0"

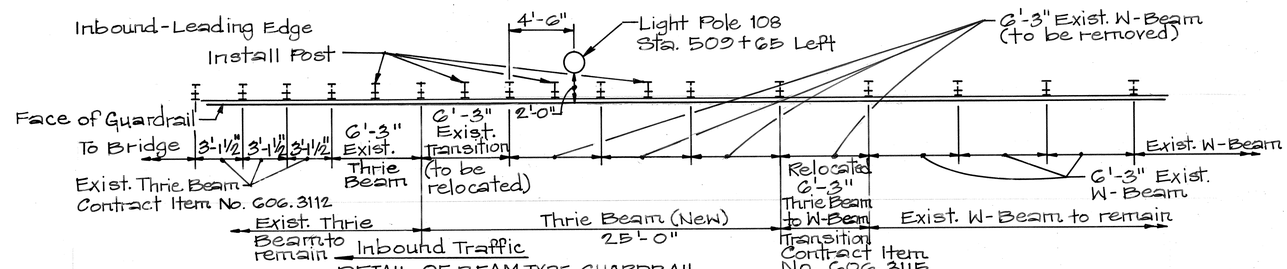

DETAIL OF BEAM TYPE GUARDRAIL
AT LIGHT POLE 108
N.T.S.

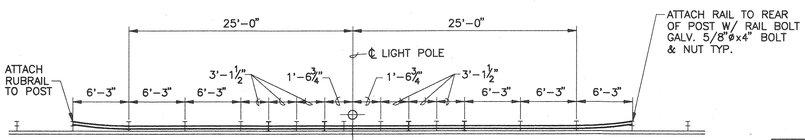

PLAN

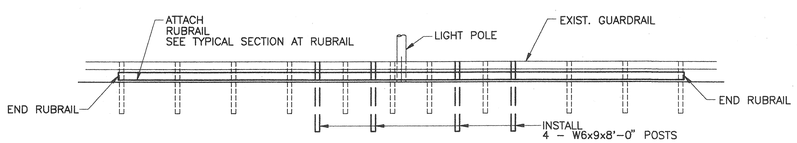

ELEVATION

DETAIL OF BEAM TYPE GUARDRAIL W/ RUBRAIL
SCALE: 1/8" = 1'-0"
(SEE TABLE 2)

TABLE 2

LIGHT POLE NUMBER	℄ STATION	SIDE (LOOKING UPSTATION)	DELETE RUBRAILS (FT.)
85	480+45	RIGHT	
87	483+10	RIGHT	
88	483+10	LEFT	
89	485+75	RIGHT	
90	485+75	LEFT	
91	488+35	RIGHT	-62.5Ft.
92	488+35	LEFT	
93	490+95	RIGHT	-62.5Ft.
94	490+95	LEFT	
107	509+65	RIGHT	-62.5Ft.
108	509+65	LEFT	-62.5Ft.
109	512+15	RIGHT	-62.5Ft.
119	524+89	RIGHT	-62.5Ft.
121	527+38	RIGHT	
122	527+45	LEFT	
124	529+95	LEFT	
126	532+15	LEFT	
128	534+75	LEFT	

TABLE 3
ADDITION OF RUBRAILS TO EXIST. GUARDRAILS

℄ STATION	SIDE (LOOKING UPSTATION)	ADD RUBRAILS (FT.)
536+89 ±	RIGHT	+62.5 ft.
589+19 ±	RIGHT	+62.5 ft.

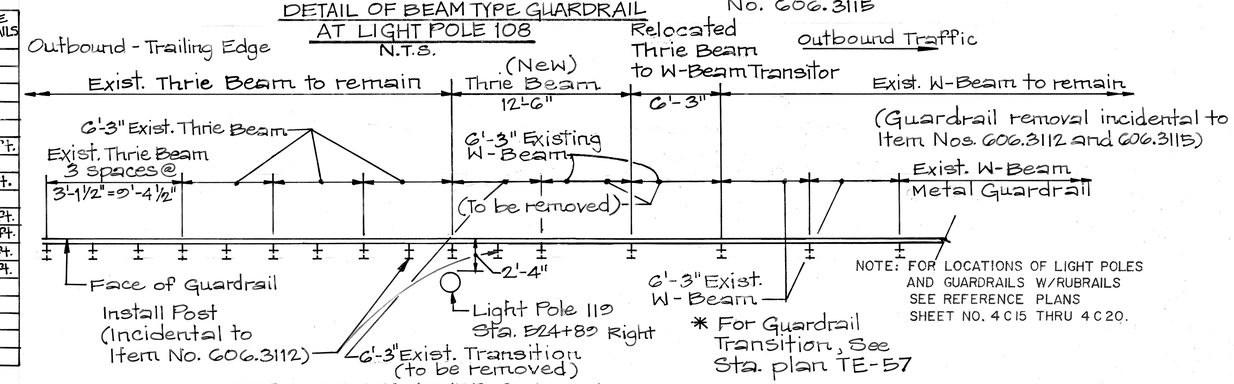

NOTE: FOR LOCATIONS OF LIGHT POLES AND GUARDRAILS W/RUBRAILS SEE REFERENCE PLANS SHEET NO. 4C15 THRU 4C20.

DETAIL OF BEAM TYPE GUARDRAIL
AT LIGHT POLE 119
N.T.S.

GRAPHIC SCALES:

1/8" = 1'-0" (8 0 8 16)

1" = 1'-0" (1 0 1 2)

RICHARD M. WAKIDA LICENSED PROFESSIONAL ENGINEER No. 2200-C HAWAII, U.S.A.

THIS WORK WAS PREPARED BY ME OR UNDER MY SUPERVISION

STATE OF HAWAII
DEPARTMENT OF TRANSPORTATION
HIGHWAYS DIVISION

NORTH HALAWA VALLEY HIGHWAY, UNIT II
RUBRAIL DETAILS

H–3 FINISH (UNIT II)
FAIP NO. I–H3–1(75), UNIT II
LEEWARD SECTION

SCALE: AS SHOWN DATE: JAN. 1997

SHEET No. 4C14 OF 22 SHEETS

ORIGINAL PLAN | NOTE BOOK No. | SURVEY PLOTTED BY | DRAWN BY | TRACED BY | DESIGNED BY | QUANTITIES BY | CHECKED BY | DATE

3–RAIL 01/28/97 16:49 RMTC JOB NO.

FED. ROAD DIST. NO.	STATE	FED. AID PROJ. NO.	FISCAL YEAR	SHEET NO.	TOTAL SHEETS
HAWAII	HAW.	I-H3-1(75), UNIT II	1997	810	1102

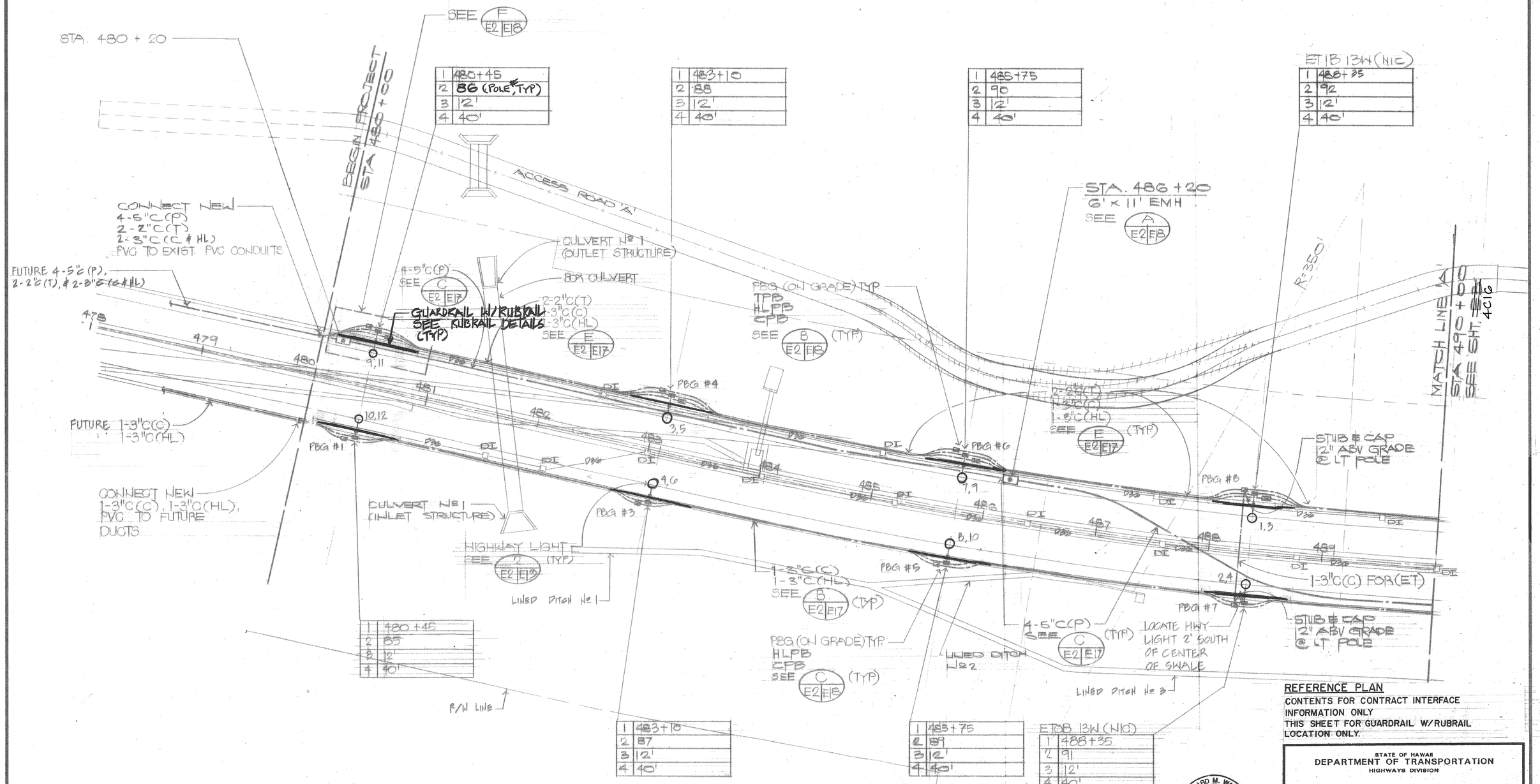

1	480+45
2	86 (POLE, TYP)
3	12'
4	40'

1	483+10
2	88
3	12'
4	40'

1	485+75
2	90
3	12'
4	40'

ET.1B 1W4 (N1C)

1	488+35
2	92
3	12'
4	40'

1	480+45
2	85
3	12'
4	40'

1	483+10
2	87
3	12'
4	40'

1	485+75
2	89
3	12'
4	40'

ETOB 1W (N1C)

1	488+35
2	91
3	12'
4	40'

GUARDRAIL W/ RUBRAIL PLAN PART I

SCALE: 1" = 40'-0"

40' 20' 0 40' 80' 120'

SCALE: 1" = 40'-0"
GRAPHIC SCALE

REFERENCE PLAN
CONTENTS FOR CONTRACT INTERFACE INFORMATION ONLY
THIS SHEET FOR GUARDRAIL W/ RUBRAIL LOCATION ONLY.

RICHARD M. WAKIDA LICENSED PROFESSIONAL ENGINEER No. 2200-C HAWAII, U.S.A.

THIS WORK WAS PREPARED BY ME OR UNDER MY SUPERVISION

STATE OF HAWAII
DEPARTMENT OF TRANSPORTATION
HIGHWAYS DIVISION

NORTH HALAWA VALLEY HIGHWAY, UNIT II
GUARDRAIL W/ RUBRAIL PLAN – PART I

H-3 FINISH (UNIT II)
FAIP NO. I-H3-1(75), UNIT II
LEEWARD SECTION

SCALE: AS SHOWN DATE: JAN. 1997

SHEET No. 4C15 OF 22 SHEETS

ORIGINAL PLAN | SURVEY PLOTTED BY | DRAWN BY | TRACED BY | DESIGNED BY | QUANTITIES BY | CHECKED BY | DATE | NOTE BOOK | No.

137216

FED. ROAD DIST. NO.	STATE	FED. AID PROJ. NO.	FISCAL YEAR	SHEET NO.	TOTAL SHEETS
HAWAII	HAW.	I-H3-1(75), UNIT II	1997	811	1102

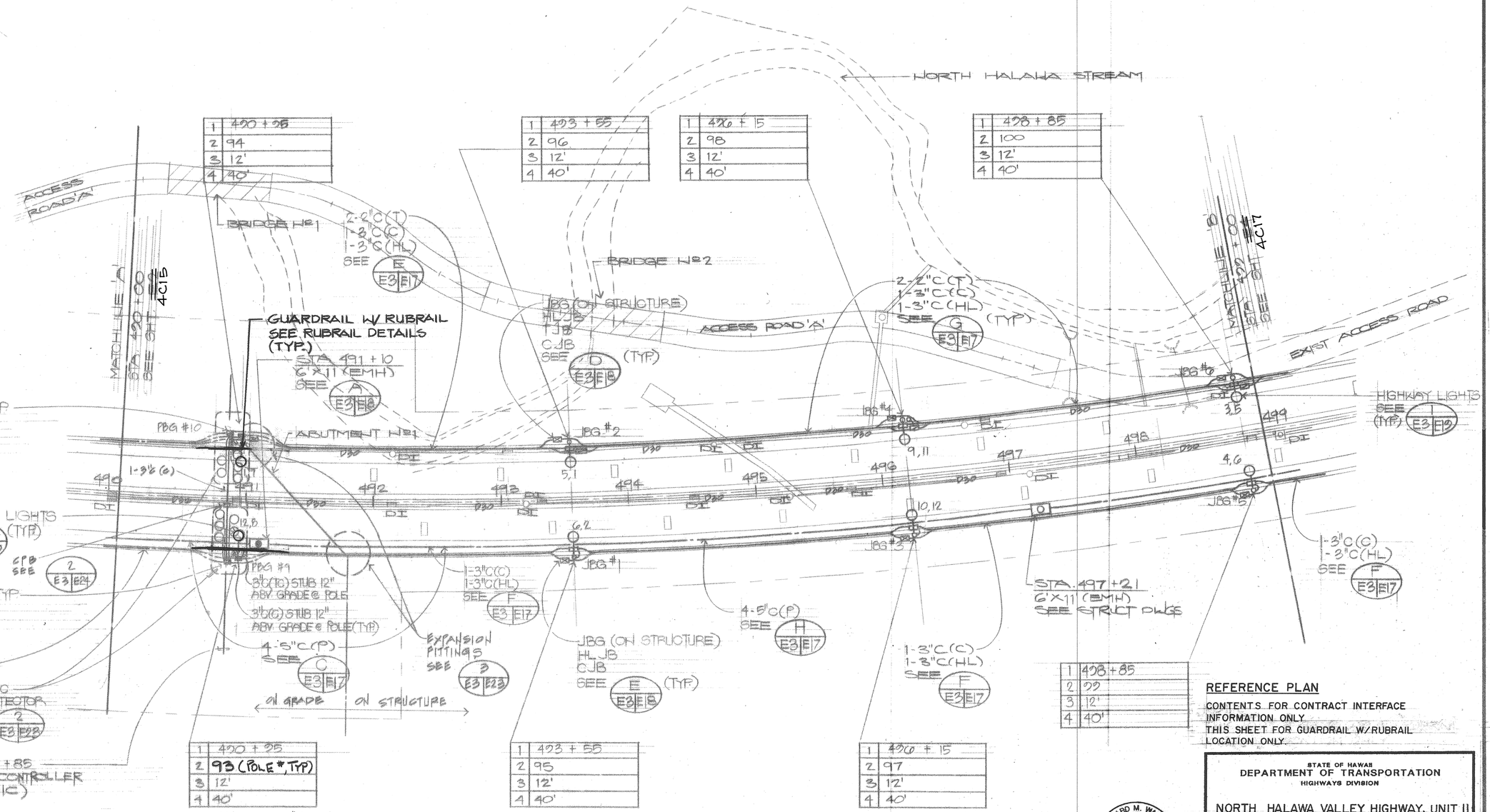

1	490+85
2	94
3	12'
4	40'

1	490+85
2	93 (POLE #, TYP)
3	12'
4	40'

1	493+55
2	96
3	12'
4	40'

1	493+55
2	95
3	12'
4	40'

1	496+15
2	98
3	12'
4	40'

1	496+15
2	97
3	12'
4	40'

1	498+85
2	100
3	12'
4	40'

1	498+85
2	99
3	12'
4	40'

GUARDRAIL W/ RUBRAIL PLAN – PART II

SCALE: 1" = 40'-0"

40' 20' 0 40' 80' 120'

SCALE: 1" = 40'-0"

GRAPHIC SCALE

REFERENCE PLAN

CONTENTS FOR CONTRACT INTERFACE INFORMATION ONLY.
THIS SHEET FOR GUARDRAIL W/RUBRAIL LOCATION ONLY.

RICHARD M. WAKIDA LICENSED PROFESSIONAL ENGINEER No. 2200-C HAWAII, U.S.A.

THIS WORK WAS PREPARED BY ME OR UNDER MY SUPERVISION

STATE OF HAWAII
DEPARTMENT OF TRANSPORTATION
HIGHWAYS DIVISION

NORTH HALAWA VALLEY HIGHWAY, UNIT II
GUARDRAIL W/ RUBRAIL PLAN – PART II

H-3 FINISH (UNIT II)
FAIP NO. I-H3-1(75), UNIT II
LEEWARD SECTION

SCALE: AS SHOWN DATE: JAN. 1997

SHEET No. 4C16 OF 22 SHEETS

811

ORIGINAL PLAN | SURVEY PLOTTED BY | DRAWN BY | TRACED BY | DESIGNED BY | NOTE BOOK | QUANTITIES BY | CHECKED BY | No. | DATE

137218

FED. ROAD DIST. NO.	STATE	FED. AID PROJ. NO.	FISCAL YEAR	SHEET NO.	TOTAL SHEETS
HAWAII	HAW.	I-H3-1(75), UNIT II	1997	812	1102

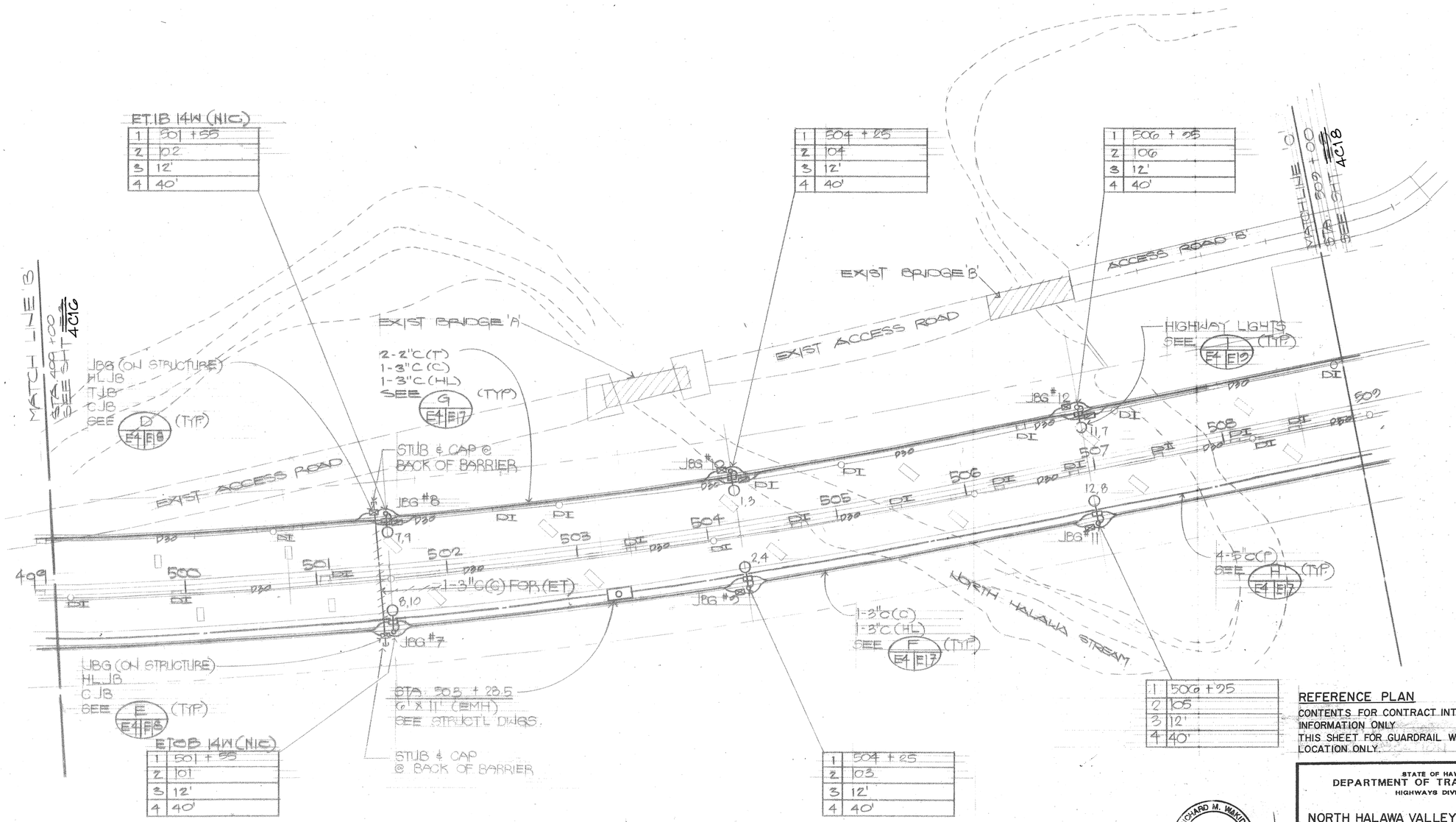

REFERENCE PLAN

CONTENTS FOR CONTRACT INTERFACE INFORMATION ONLY
THIS SHEET FOR GUARDRAIL W/ RUBRAIL LOCATION ONLY

GUARDRAIL W/ RUBRAIL PLAN – PART III

SCALE: 1" = 40'-0"

40' 20' 0 40' 80' 120'
SCALE: 1" = 40'-0"
GRAPHIC SCALE

RICHARD M. WAKIDA
LICENSED PROFESSIONAL ENGINEER
No. 2200-C
Hawaii, U.S.A.

THIS WORK WAS PREPARED BY ME OR UNDER MY SUPERVISION

STATE OF HAWAII
DEPARTMENT OF TRANSPORTATION
HIGHWAYS DIVISION

NORTH HALAWA VALLEY HIGHWAY UNIT II
GUARDRAIL W/ RUBRAIL PLAN – PART III

H-3 FINISH (UNIT II)
FAIP NO. I-H3-1(75), UNIT II
LEEWARD SECTION

SCALE: AS SHOWN DATE: JAN. 1997

SHEET No. 4C17 OF 22 SHEETS

ORIGINAL PLAN
SURVEY PLOTTED BY
DRAWN BY
TRACED BY
DESIGNED BY
QUANTITIES BY
CHECKED BY
DATE
NOTE BOOK
No.

137218

FED. ROAD DIST. NO.	STATE	FED. AID PROJ. NO.	FISCAL YEAR	SHEET NO.	TOTAL SHEETS
HAWAII	HAW.	I-H3-1(75), UNIT II	1997	813	1102

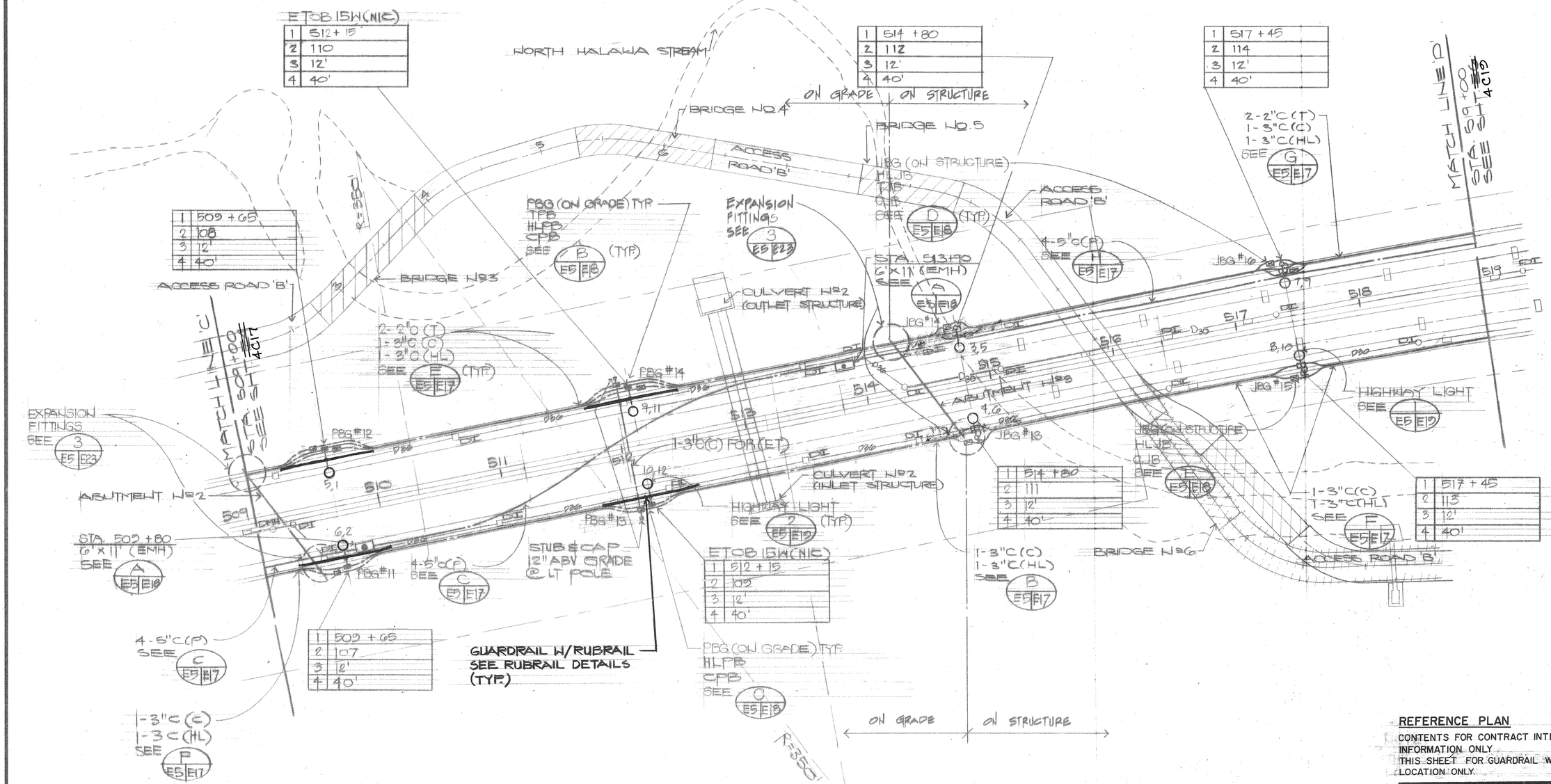

GUARDRAIL W/ RUBRAIL PLAN - PART IV

SCALE: 1" = 40'-0"

40' 20' 0 40' 80' 120'

SCALE: 1" = 40"

GRAPHIC SCALE

REFERENCE PLAN

CONTENTS FOR CONTRACT INTERFACE INFORMATION ONLY
THIS SHEET FOR GUARDRAIL W/RUBRAIL LOCATION ONLY.

STATE OF HAWAII
DEPARTMENT OF TRANSPORTATION
HIGHWAYS DIVISION

NORTH HALAWA VALLEY HIGHWAY UNIT II
GUARDRAIL W/RUBRAIL PLAN-PART IV

H-3 FINISH (UNIT II)
FAIP NO. I-H3-1(75), UNIT II
LEEWARD SECTION

SCALE: AS SHOWN DATE: JAN. 1997

RICHARD M. WAKIDA
LICENSED PROFESSIONAL ENGINEER
No. 2200-C
HAWAII, U.S.A.

THIS WORK WAS PREPARED BY ME OR UNDER MY SUPERVISION

SHEET No. 4C18 OF 22 SHEETS

ORIGINAL PLAN
SURVEY PLOTTED BY
DRAWN BY
TRACED BY
DESIGNED BY
QUANTITIES BY
CHECKED BY
DATE
NOTE BOOK
No.

137218

FED. ROAD DIST. NO.	STATE	FED. AID PROJ. NO.	FISCAL YEAR	SHEET NO.	TOTAL SHEETS
HAWAII	HAW.	I-H3-1(75), UNIT II	1997	814	1102

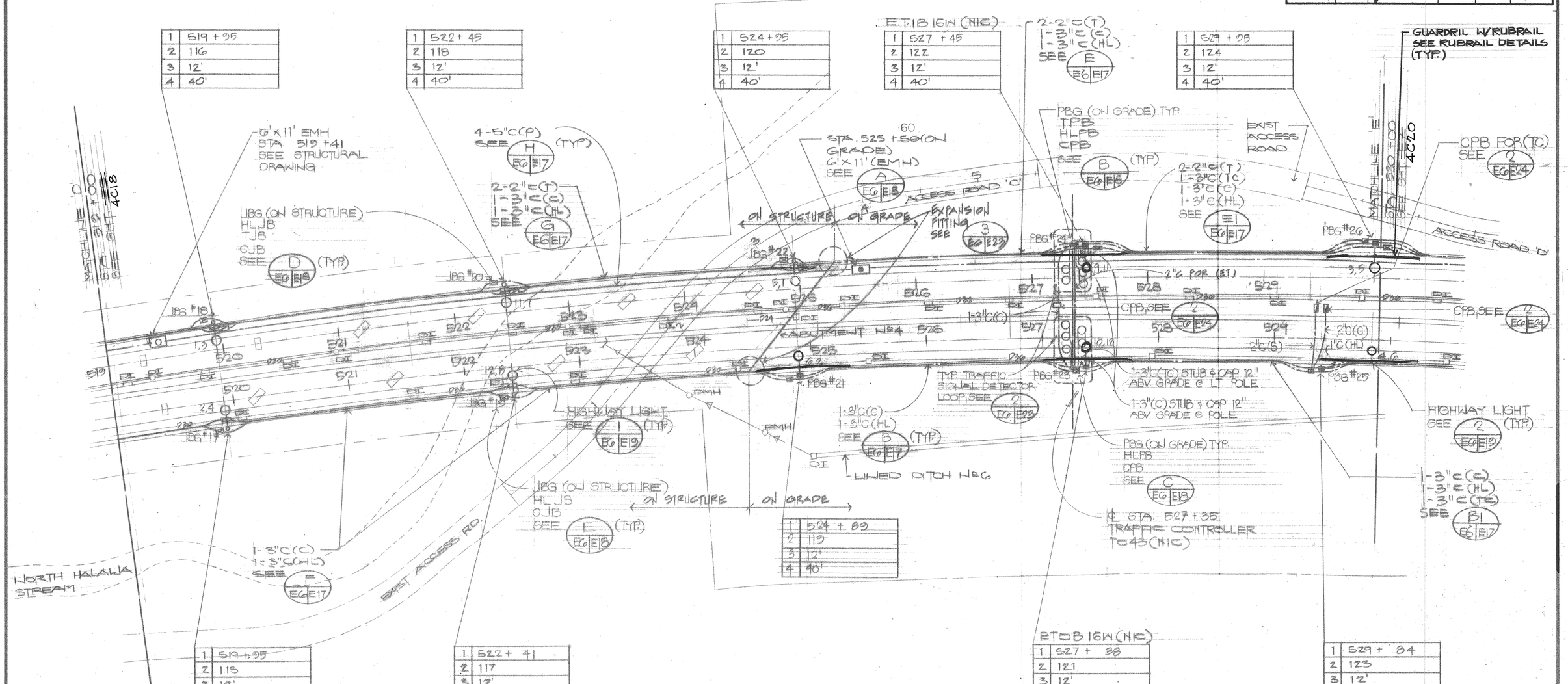

1	519 + 95
2	116
3	12'
4	40'

1	522 + 45
2	118
3	12'
4	40'

1	524 + 95
2	120
3	12'
4	40'

1	527 + 45
2	122
3	12'
4	40'

1	529 + 95
2	124
3	12'
4	40'

1	524 + 89
2	119
3	12'
4	40'

1	519 + 95
2	115
3	12'
4	40'

1	522 + 41
2	117
3	12'
4	40'

1	527 + 38
2	121
3	12'
4	40'

1	529 + 84
2	123
3	12'
4	40'

REFERENCE PLAN
CONTENTS FOR CONTRACT INTERFACE INFORMATION ONLY
THIS SHEET FOR GUARDRAIL W/RUBRAIL LOCATION ONLY

GUARDRAIL W/ RUBRAIL PLAN - PART V

SCALE: 1" = 40'-0"

40' 20' 0 40' 80' 120'
SCALE: 1"=40'-0"
GRAPHIC SCALE

RICHARD M. WAKIDA LICENSED PROFESSIONAL ENGINEER No. 2200-C HAWAII, U.S.A.

THIS WORK WAS PREPARED BY ME OR UNDER MY SUPERVISION

STATE OF HAWAII
DEPARTMENT OF TRANSPORTATION
HIGHWAYS DIVISION

NORTH HALAWA VALLEY HIGHWAY, UNIT II
GUARDRAIL W/ RUBRAIL PLAN-PART V

H-3 FINISH (UNIT II)
FAIP NO. I-H3-1(75), UNIT II
LEEWARD SECTION

SCALE: AS SHOWN DATE: JAN. 1997

SHEET No. 4C19 OF 22 SHEETS

ORIGINAL PLAN | SURVEY PLOTTED BY | DRAWN BY | TRACED BY | DESIGNED BY | QUANTITIES BY | CHECKED BY | DATE | NOTE BOOK | No.

137318

814

FED. ROAD DIST. NO.	STATE	FED. AID PROJ. NO.	FISCAL YEAR	SHEET NO.	TOTAL SHEETS
HAWAII	HAW.	I-H3-1(75), UNIT II	1997	815	1102

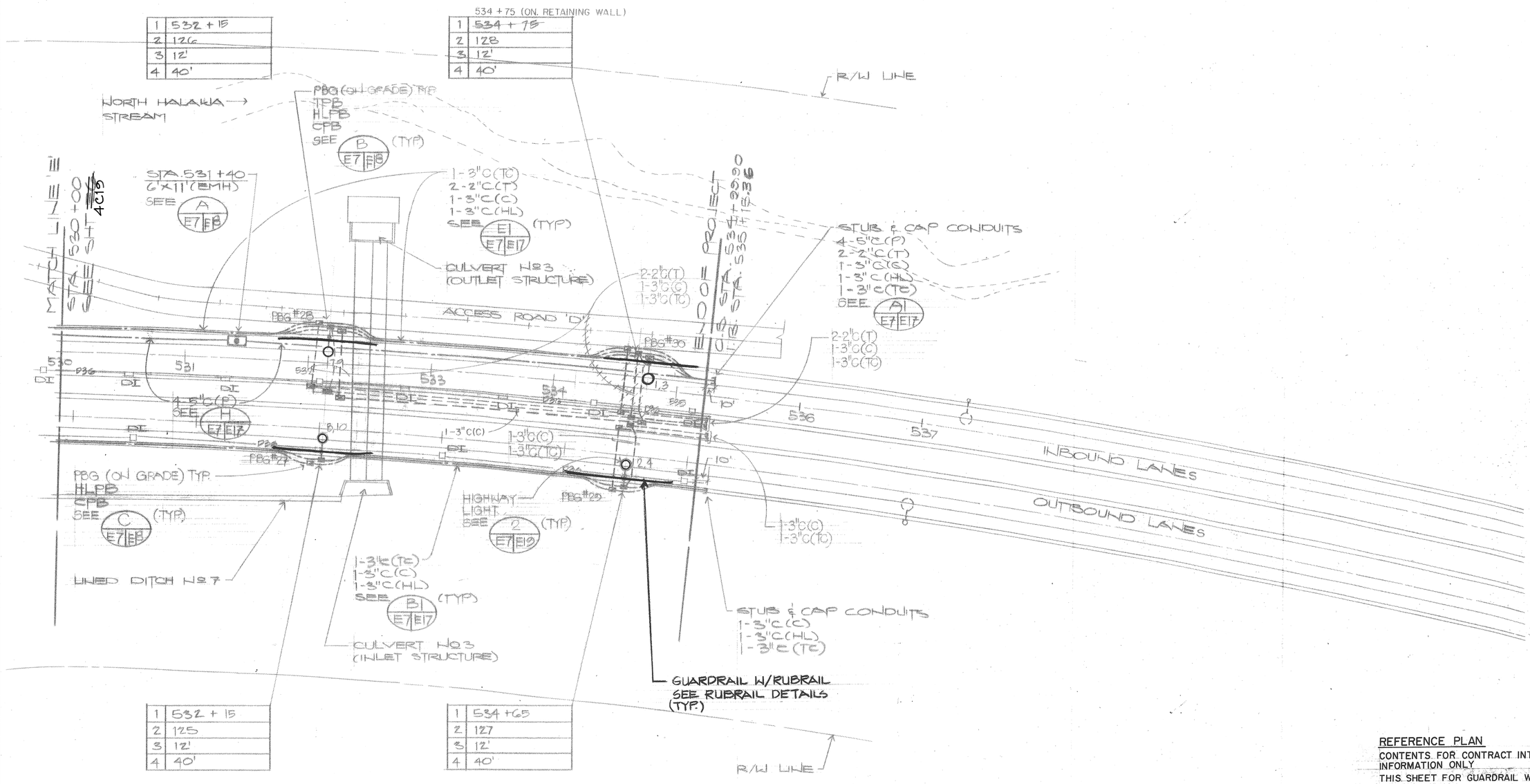

REFERENCE PLAN
CONTENTS FOR CONTRACT INTERFACE INFORMATION ONLY
THIS SHEET FOR GUARDRAIL W/RUBRAIL LOCATION ONLY

NORTH

GUARDRAIL W/ RUBRAIL PLAN-PART VI

SCALE: 1"=40'-0"

40' 20' 0 40' 80' 120'
SCALE: 1"=40'-0"
GRAPHIC SCALE

RICHARD M. WAKIDA
LICENSED PROFESSIONAL ENGINEER
No. 2200-C
HAWAII, U.S.A.

THIS WORK WAS PREPARED BY ME OR UNDER MY SUPERVISION

STATE OF HAWAII
DEPARTMENT OF TRANSPORTATION
HIGHWAYS DIVISION

NORTH HALAWA VALLEY HIGHWAY, UNIT II
GUARDRAIL W/ RUBRAIL PLAN-PART VI

H-3 FINISH (UNIT II)
FAIP NO. I-H3-1(75), UNIT II
LEEWARD SECTION

SCALE: AS SHOWN DATE: JAN. 1997

SHEET No. 4C20 OF 22 SHEETS

815

ORIGINAL PLAN | SURVEY PLOTTED BY | DRAWN BY | TRACED BY | DESIGNED BY | QUANTITIES BY | CHECKED BY | DATE
NOTE BOOK | No.

137318

FED. ROAD DIST. NO.	STATE	FED. AID PROJ. NO.	FISCAL YEAR	SHEET NO.	TOTAL SHEETS
HAWAII	HAW.	I-H3-1(75), UNIT II	1997	816	1102

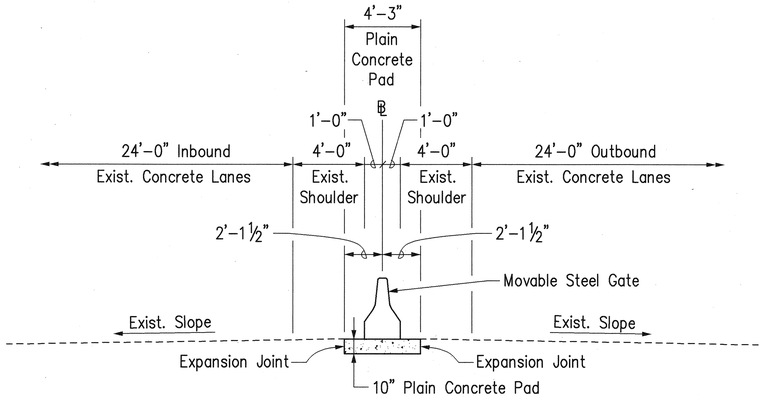

TYPICAL SECTION – INBOUND AND OUTBOUND LANES

Scale: ¼" = 1'-0"

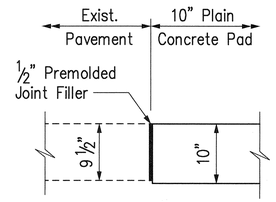

EXPANSION JOINT

Scale: 1" = 1'-0"

LEGEND:

10" Plain Concrete Pad

NOTES:

1. Concrete for the 10" Plain Concrete Pad shall be 4000 psi minimum strength Portland Cement Concrete with graded aggregate and 3" maximum slump.
2. Sawed contraction joints for the 10" Plain Concrete Pad shall be spaced 15' apart and extend into the slab to a depth of 1½". Contractor shall saw cut the joints within 12 hours after the completion of concrete placement. Fill contraction joints with poured-type joint sealer, Specifications Section 705.04(A).
3. The Engineer will not pay for the 10" Plain Concrete Pad nor sawed contraction joints separately and will consider payment incidental to the Movable Steel Gate System.
4. Payment for Expansion Joint shall be considered incidental to Movable Steel Gate System.

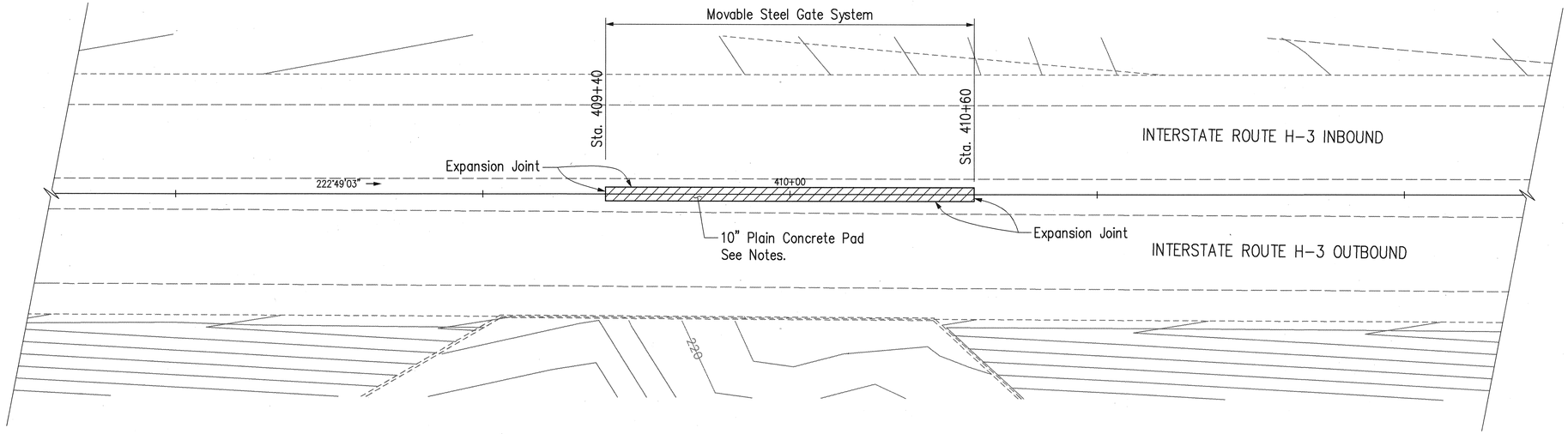

PLAN

Scale: 1" = 20'

RANDALL M. URASAKI
LICENSED PROFESSIONAL ENGINEER
No. 7269-C
HAWAII, U.S.A.

THIS WORK WAS PREPARED BY ME OR UNDER MY SUPERVISION

STATE OF HAWAII
DEPARTMENT OF TRANSPORTATION
HIGHWAYS DIVISION

HALAWA VALLEY ROADWAY CONSTRUCTION EMERGENCY CROSSOVER

H-3 FINISH (UNIT II)
FAIP NO. I-H3-1(75), UNIT II
LEEWARD SECTION

SCALE: AS SHOWN DATE: JANUARY 1997

SHEET NO. 4C21 OF 22 SHEETS

816

ORIGINAL PLAN — SURVEY PLOTTED BY ___ DATE ___; DRAWN BY ___; TRACED BY ___; NOTE BOOK ___; DESIGNED BY ___; QUANTITIES BY ___; CHECKED BY ___; No. ___

CAD by J. Mimura, SS-52

Last Saved: J:\H3RF\RFU2\WINDWARD\CROSSOVR\XO-BASE.dwg 02/26/97 at 16:38

FED. ROAD DIST. NO.	STATE	FED. AID PROJ. NO.	FISCAL YEAR	SHEET NO.	TOTAL SHEETS
HAWAII	HAW.	I-H3-1(75), UNIT II	1997	817	1102

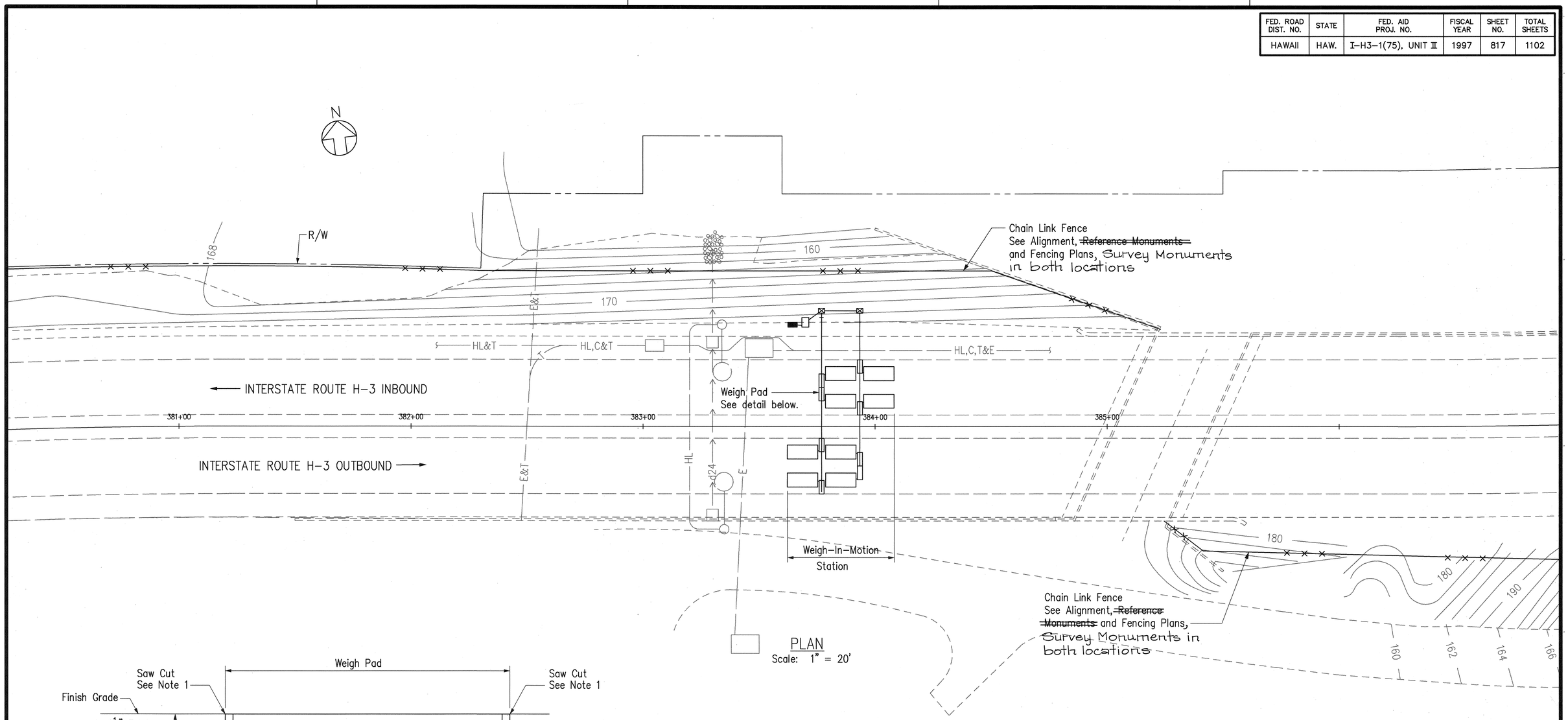

PLAN
Scale: 1" = 20'

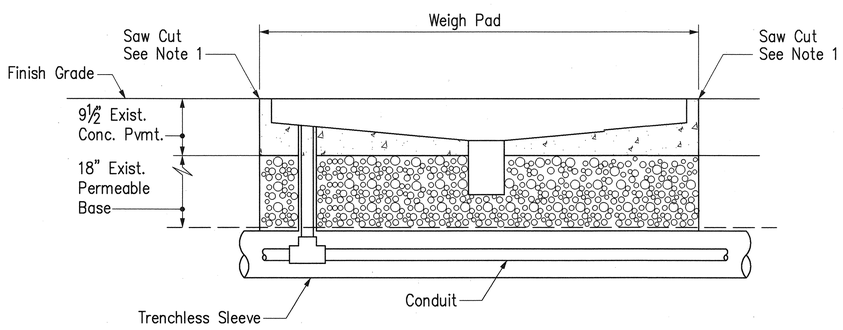

ELEVATION

WEIGH PAD
Not to Scale

NOTES:

1. Saw cut pavement to a depth of 9-1/2" and remove Exist. Concrete Pavement.
2. Provide shoring along walls parallel to conduit and excavate to expose trenchless sleeve.
3. Restore Permeable Base and install Weigh Pad.
4. See Systems Plans for Weigh-In-Motion Station details.

RANDALL M. URASAKI
LICENSED PROFESSIONAL ENGINEER
No. 7269-C
HAWAII, U.S.A.

THIS WORK WAS PREPARED BY ME OR UNDER MY SUPERVISION.

Date	Revision
5/2/97	Relocated Weigh-In-Motion Station Added Weigh Pad detail Added Notes

STATE OF HAWAII
DEPARTMENT OF TRANSPORTATION
HIGHWAYS DIVISION

NORTH HALAWA VALLEY
ROADWAY CONSTRUCTION
WEIGH-IN-MOTION STATION

H-3 FINISH (UNIT II)
FAIP NO. I-H3-1(75), UNIT II
LEEWARD SECTION

SCALE: AS SHOWN DATE: JANUARY 1997

SHEET NO. 4C22 OF 22 SHEETS

ADD. 817

ORIGINAL PLAN
NOTE BOOK No.
SURVEY PLOTTED BY
DRAWN BY
TRACED BY
DESIGNED BY
QUANTITIES BY
CHECKED BY
DATE

CAD by S. Chang.

Last Saved: J:\H3RF\RFU2\ROAD\NHV-STA.dwg 05/03/97 at 15:28

FED. ROAD DIST. NO.	STATE	FED. AID PROJ. NO.	FISCAL YEAR	SHEET NO.	TOTAL SHEETS
HAWAII	HAW.	I-H3-1(75),UNIT II	1997	818	1102

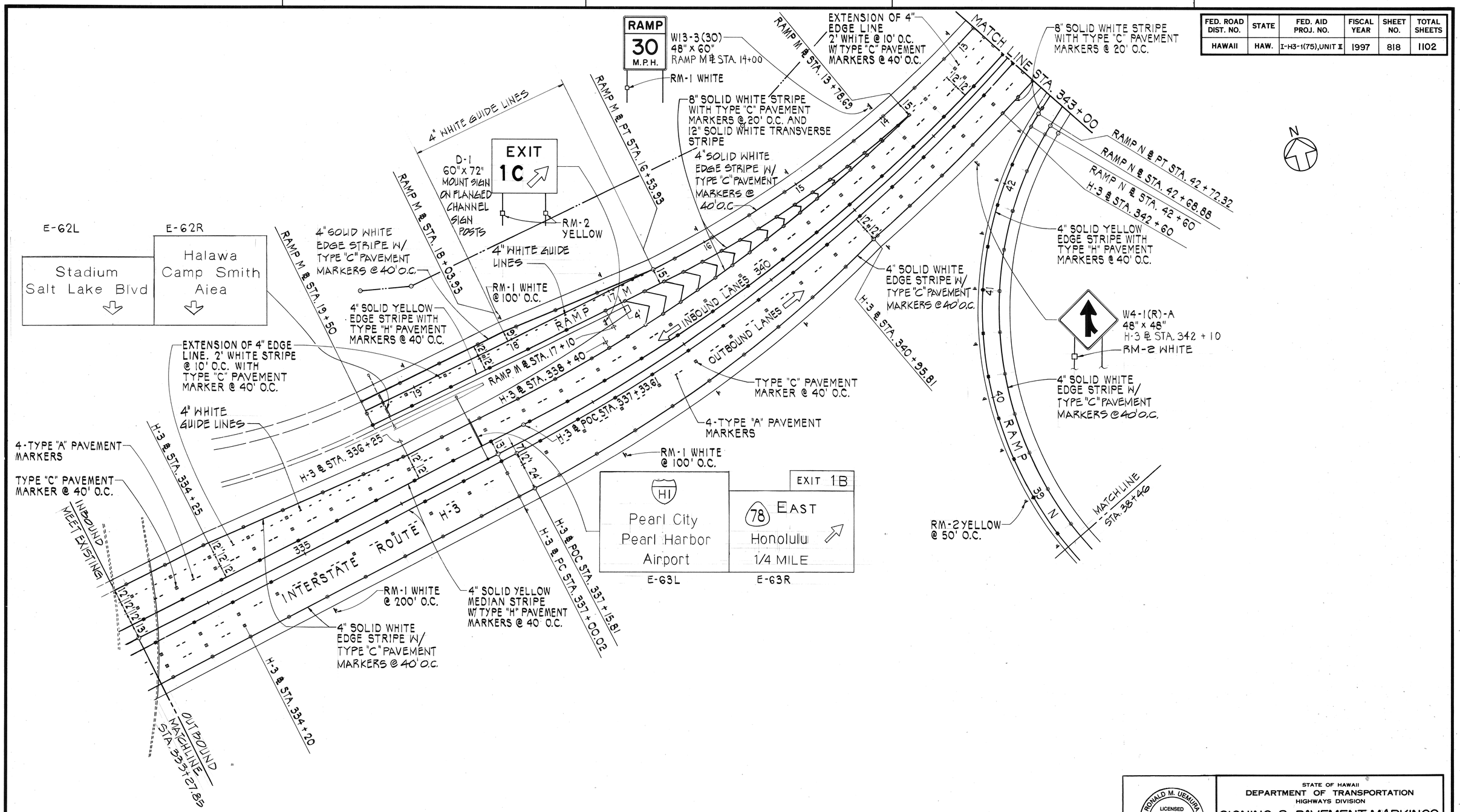

SURVEY PLOTTED BY	DATE
DRAWN BY	
TRACED BY	
DESIGNED BY	
QUANTITIES BY	
CHECKED BY	

ORIGINAL PLAN

NOTE BOOK No.

DATE	REVISION

RONALD M. UEMURA LICENSED PROFESSIONAL ENGINEER No. 4441-C HAWAII, U.S.A.

This work was prepared by me or under my supervision.

2/10/97

STATE OF HAWAII
DEPARTMENT OF TRANSPORTATION
HIGHWAYS DIVISION

SIGNING & PAVEMENT MARKINGS
MAKAI QUARRY VIADUCT
℄ STA.333+27.85 TO STA.343+00

H-3 FINISH (UNIT II)
FAIP NO. I-H3-1(75), UNIT II
LEEWARD SECTION

SCALE: 1" = 40' DATE: JAN. 1997

SHEET No. 4P1 OF 3 SHEETS

FED. ROAD DIST. NO.	STATE	FED. AID PROJ. NO.	FISCAL YEAR	SHEET NO.	TOTAL SHEETS
HAWAII	HAW.	I-H3-1(75), UNIT II	1997	819	1102

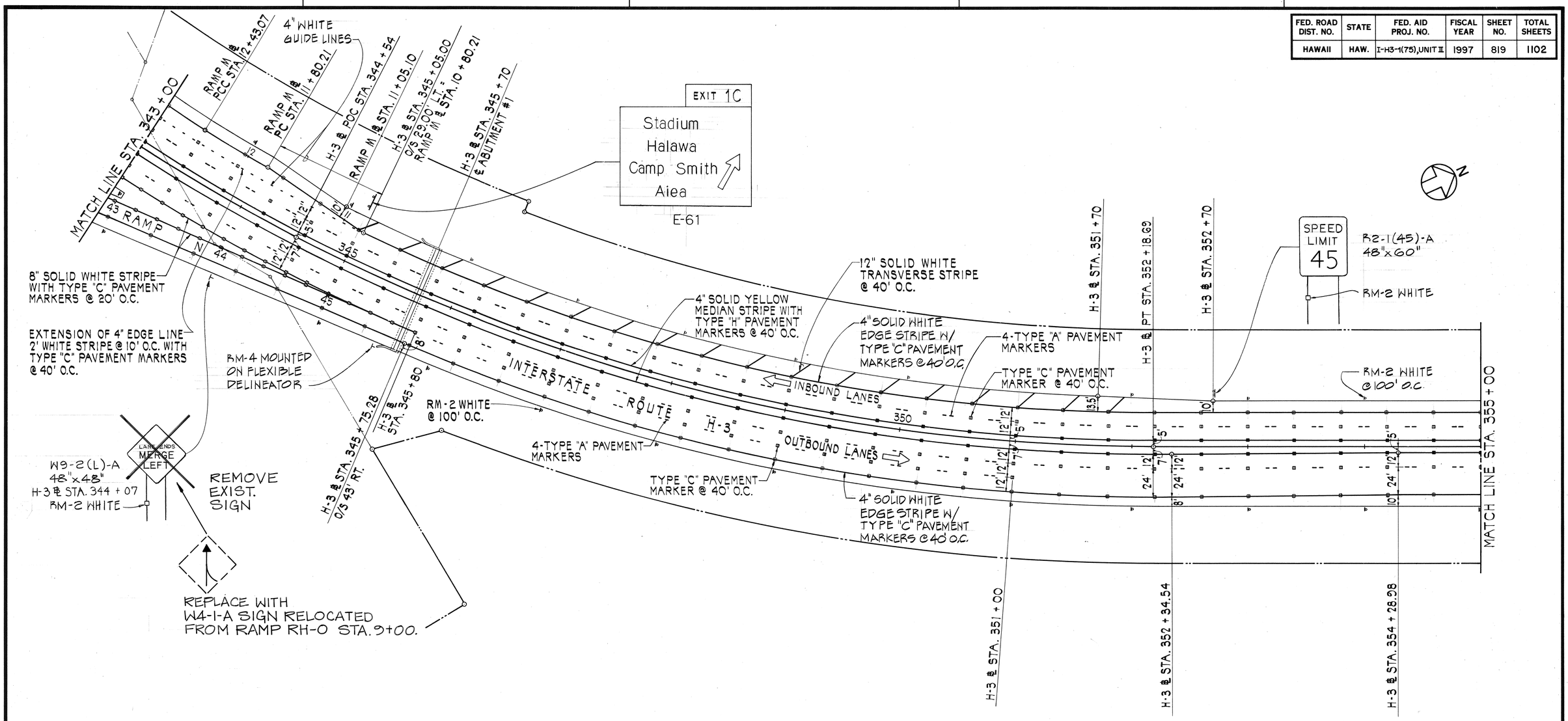

ORIGINAL PLANS	SURVEY PLOTTED BY ____ DATE:
	DRAWN BY
	TRACED BY
NOTE BOOK	DESIGNED BY
	QUANTITIES BY
No. ____	CHECKED BY

RONALD M. UEMURA LICENSED PROFESSIONAL ENGINEER No. 4441-C HAWAII, U.S.A.

This work was prepared by me or under my supervision.

STATE OF HAWAII
DEPARTMENT OF TRANSPORTATION
HIGHWAYS DIVISION

SIGNING & PAVEMENT MARKINGS
MAKAI QUARRY VIADUCT
℄ STA. 343+00 TO STA. 355+00

H-3 FINISH (UNIT II)
FAIP NO. I-H3-1(75), UNIT II
LEEWARD SECTION

SCALE: 1" = 40' DATE: JAN. 1997

SHEET No. 4P2 OF 3 SHEETS

FED. ROAD DIST. NO.	STATE	FED. AID PROJ. NO.	FISCAL YEAR	SHEET NO.	TOTAL SHEETS
HAWAII	HAW.	I-H3-1(75),UNIT II	1997	820	1102

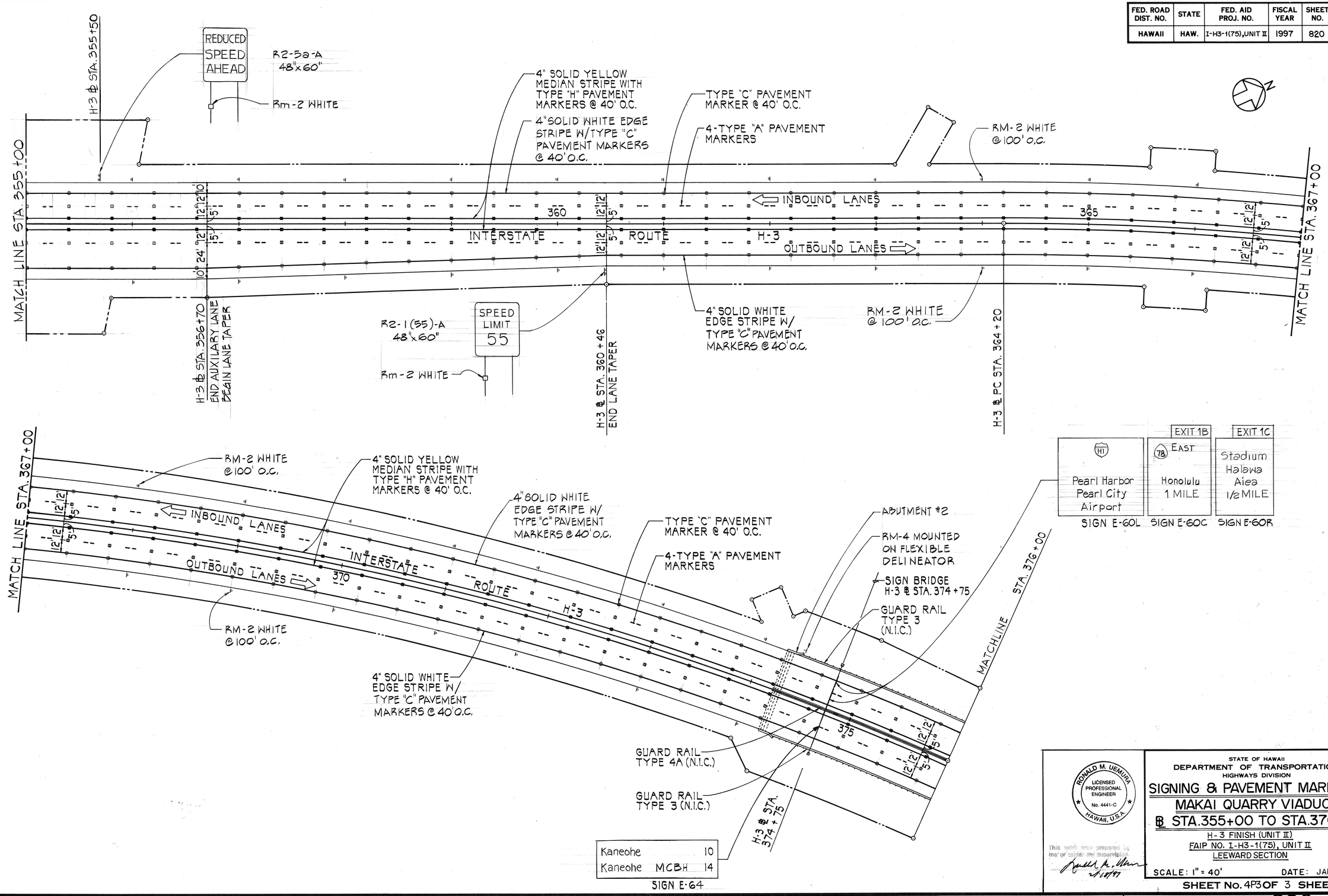

ORIGINAL PLAN	
	SURVEY PLOTTED BY
	DRAWN BY
	TRACED BY
NOTE BOOK	DESIGNED BY
	QUANTITIES BY
No.	CHECKED BY
	DATE

RONALD M. UEMURA LICENSED PROFESSIONAL ENGINEER No. 4441-C HAWAII, U.S.A.

This work was prepared by me or under my supervision.

2/18/97

STATE OF HAWAII
DEPARTMENT OF TRANSPORTATION
HIGHWAYS DIVISION

SIGNING & PAVEMENT MARKINGS

MAKAI QUARRY VIADUCT

℄ STA. 355+00 TO STA. 376+00

H-3 FINISH (UNIT II)
FAIP NO. I-H3-1(75), UNIT II
LEEWARD SECTION

SCALE: 1" = 40' DATE: JAN. 1997

SHEET No. 4P3 OF 3 SHEETS

820

FED. ROAD DIST. NO.	STATE	PROJ. NO.	FISCAL YEAR	SHEET NO.	TOTAL SHEETS
HAWAII	HAW.	I-H3-1(75) UNIT II	1997	C.O. 821	1102

ABBREVIATIONS:

HL	=	HIGHWAY LIGHTING CONDUCTORS
hl	=	EXISTING HIGHWAY LIGHTING CONDUCTORS
C	=	COMMUNICATIONS CABLES
c	=	EXISTING COMMUNICATIONS CABLES
e	=	EXISTING HECO PRIMARY CABLES
t	=	EXISTING HTCO CABLES
CKTS	=	CIRCUITS
GND	=	GROUND CONDUCTOR

ELECTRICAL SYMBOLS:

EXISTING HIGHWAY LIGHTING PULL BOX, IN GRADE

EXISTING COMMUNICATION PULL BOX, IN GRADE

EXISTING HIGHWAY LIGHTING METAL STANDARD, BRACKET ARM AND LUMINAIRE

RELOCATED HIGHWAY LIGHTING METAL STANDARD, BRACKET ARM AND LUMINAIRE MOUNTED ON NEW CONCRETE BASE

—hl— EXISTING UNDERGROUND DUCT WITH EXISTNG WIRES, "EXISTING HIGHWAY LIGHT DUCT AND CONDUCTORS" INDICATED

—HL— UNDERGROUND DUCT WITH HIGHWAY LIGHTING CONDUCTORS

(A) DUCT SECTION INDICATOR, "SEE DUCT SECTION 'A' " INDICATED, SEE DETAIL ON THIS SHEET

GENERAL NOTES:

1. PAYMENT FOR THE ACCEPTED HIGHWAY LIGHTING SYSTEM WILL BE MADE ACCORDING TO "SECTION 622-HIGHWAY LIGHTING SYSTEM" OF THE SPECIAL PROVISIONS, PROPOSAL CONTRACT AND BOND OF THE PROJECT.
2. ALL HIGHWAY LIGHTING DUCT MAINS TO BE 3 INCH SCHEDULE 40 PVC DUCTS ENCASED IN A 3" MINIMUM CLASS "B" CONCRETE JACKET.
3. ALL HIGHWAY PULLBOX TO HIGHWAY LIGHTING CONCRETE FOUNDATION SHALL BE 2 INCH SCHEDULE 40 PVC DUCTS ENCASED IN A 3 INCH MINIMUM CLASS B CONCRETE JACKET.

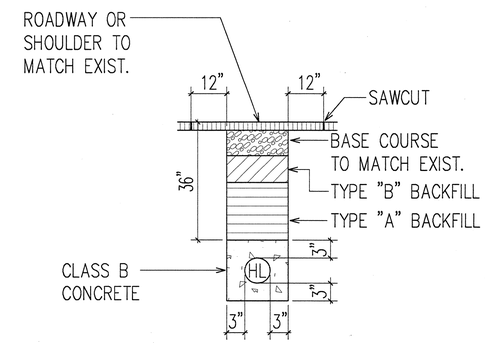

HIGHWAY LIGHTING DUCT SECTION "A"
N.T.S.

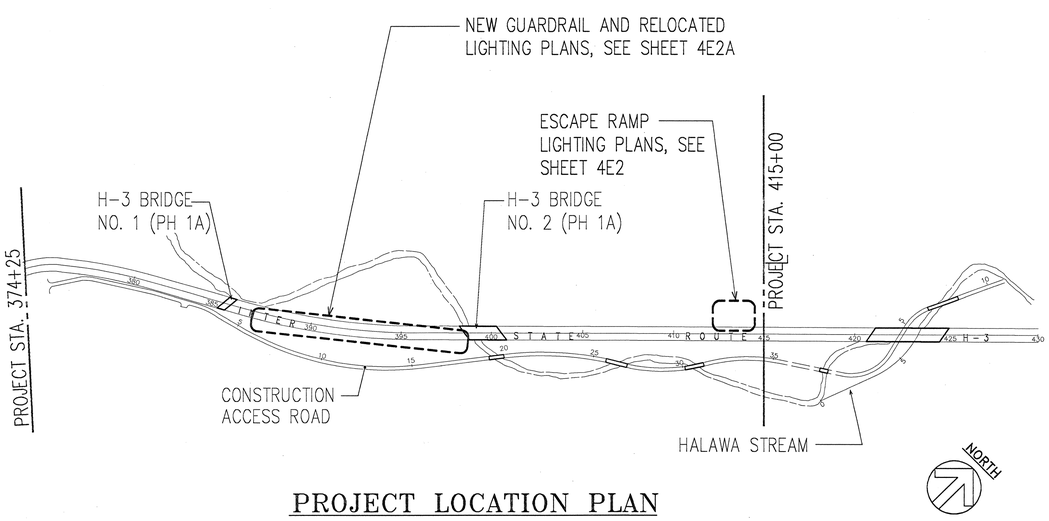

PROJECT LOCATION PLAN
N.T.S.

DATE	REVISION
11/7/97	ADDED RELOCATED LIGHTING WORK

ANDREW I. MIYASATO
LICENSED PROFESSIONAL ENGINEER
No. 4340-E
HAWAII, U.S.A.

THIS WORK WAS PREPARED BY ME OR UNDER MY SUPERVISION.
Andrew I. Miyasato
RONALD N. S. HO & ASSOC., INC.
ELECTRICAL ENGINEERS

STATE OF HAWAII
DEPARTMENT OF TRANSPORTATION
HIGHWAYS DIVISION

NORTH HALAWA VALLEY
ROADWAY CONSTRUCTION

ELECTRICAL SYMBOLS, LOCATION MAP

H-3 FINISH (UNIT II)
FAIP NO. I-H3-1(75), UNIT II
LEEWARD SECTION

SCALE: AS NOTED DATE: FEB. 1997

SHEET No. 4E1 OF 3 SHEETS

C.O. 821

ORIGINAL PLAN	SURVEY PLOTTED BY	DATE
	DRAWN BY	"
	TRACED BY	"
NOTE BOOK	DESIGNED BY	"
	QUANTITIES BY	"
No.	CHECKED BY	"

LAST SAVE: 11/10/97 @ 12:22:28 BY AM PLOT SCALE=1.0
G:\ADA\PROJECTS\H3\ADA\H3\H3\H3\H3.DGN

FED. ROAD DIST. NO.	STATE	PROJ. NO.	FISCAL YEAR	SHEET NO.	TOTAL SHEETS
HAWAII	HAW.	I-H3-1(75) UNIT II	1997	C.O. 822	1102

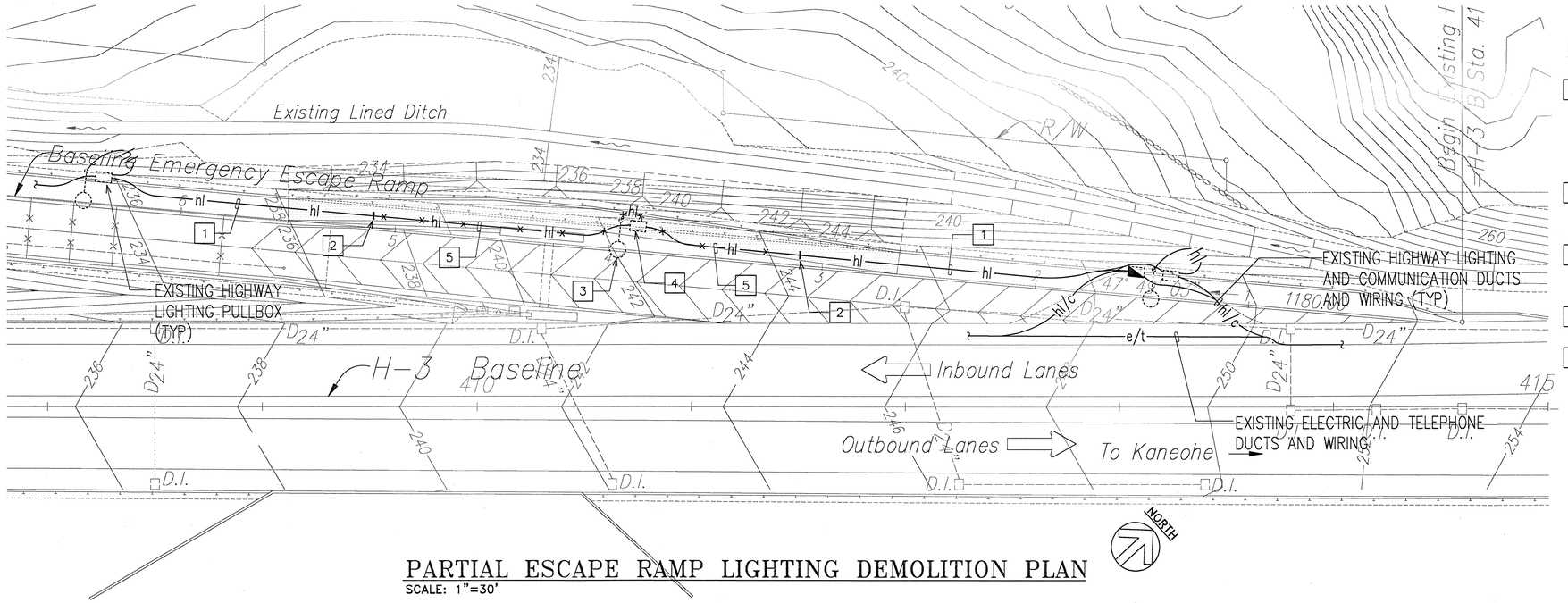

PARTIAL ESCAPE RAMP LIGHTING DEMOLITION PLAN

SCALE: 1"=30'

PLAN NOTES:

1. EXISTING 3" CONDUIT, 6#2, 1#8 GND (HIGHWAY LIGHTING CIRCUIT NOS. 2, 4, 6). REMOVE CONDUCTORS AND INSTALL NEW CONDUCTORS AFTER LIGHT STANDARD AND PULLBOX ARE RELOCATED.
2. CUT EXISTING 3" CONDUIT AND REROUTE TO RELOCATED LIGHT STANDARD AND PULLBOX LOCATION VIA NEW 3" CONDUIT.
3. EXISTING HIGHWAY LIGHT STANDARD, BRACKET ARM AND LUMINAIRE TO BE RELOCATED.
4. EXISTING HIGHWAY LIGHTING PULLBOX TO BE RELOCATED.
5. EXISTING 3" CONDUIT, 6#2, 1#8 GND (HIGHWAY LIGHTING CIRCUIT NUMBERS 2, 4, 6). REMOVE CONDUCTORS AND ABANDON CONDUIT BELOW GRADE.

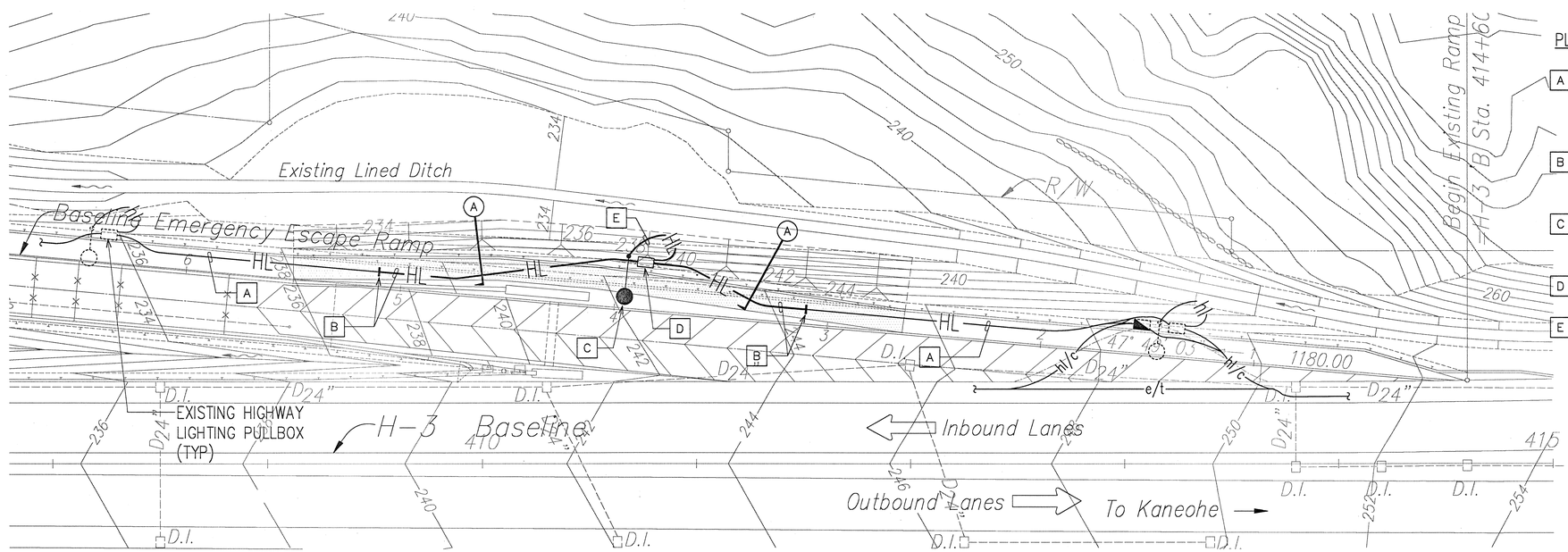

PARTIAL ESCAPE RAMP LIGHTING WORK PLAN

SCALE: 1"=30'

PLAN NOTES:

A. EXISTING 3" CONDUIT. PROVIDE 6#2, 1#8 GND (HIGHWAY LIGHTING CKT. NOS. 2, 4, 6). SPLICE TO EXISTING CONDUCTORS IN EXISTING HIGHWAY LIGHTING PULLBOX.

B. INTERCEPT EXISTING 3" CONDUIT WITH 3" CONDUIT AND EXTEND TO RELOCATED HIGHWAY LIGHTING PULLBOX. PROVIDE 6#2, 1#8 GND.

C. RELOCATED EXISTING HIGHWAY LIGHT STANDARD, BRACKET ARM AND LUMINAIRE ONTO NEW CONCRETE BASE. SEE DETAIL 4/4E2|4E3

D. RELOCATED HIGHWAY LIGHTING PULLBOX.

E. PROVIDE 2" CONDUIT, 2#6, 1#8 GND FROM THE RELOCATED HIGHWAY LIGHTING PULLBOX TO THE RELOCATED HIGHWAY LIGHTING STANDARD. SEE DETAIL 5/4E2|4E3

30' 15' 0 30' 60' 90'

SCALE: 1"=30'

GRAPHIC SCALE

ANDREW I. MIYASATO LICENSED PROFESSIONAL ENGINEER No. 4340-E HAWAII, U.S.A.

THIS WORK WAS PREPARED BY ME OR UNDER MY SUPERVISION.

Andrew I. Miyasato

RONALD N. S. HO & ASSOC., INC.
ELECTRICAL ENGINEERS

DATE	REVISION
10/31/97	REVISED TITLE BLOCK

STATE OF HAWAII
DEPARTMENT OF TRANSPORTATION
HIGHWAYS DIVISION

NORTH HALAWA VALLEY
ROAD CONSTRUCTION

LIGHTING PLANS AT ESCAPE RAMP

H-3 FINISH (UNIT II)
FAIP NO. I-H3-1(75), UNIT II
LEEWARD SECTION

SCALE: AS NOTED DATE: FEB. 1997

SHEET No. 4E2 OF 3 SHEETS

ORIGINAL PLAN | SURVEY PLOTTED BY | DRAWN BY | TRACED BY | DESIGNED BY | QUANTITIES BY | CHECKED BY | NOTE BOOK | No. | DATE

LAST SAVE: 10/28/97 @ 08:35:57 BY: AM PLOT SC: 1"=30'
© V:\CAD\PROJECTS\F3000A\3000B\N_300B\N_300B.DGN

C.O. 822

FED. ROAD DIST. NO.	STATE	PROJ. NO.	FISCAL YEAR	SHEET NO.	TOTAL SHEETS
HAWAII	HAW.	I-H3-1(75) UNIT II	1997	C.O. 822 S-1	1102

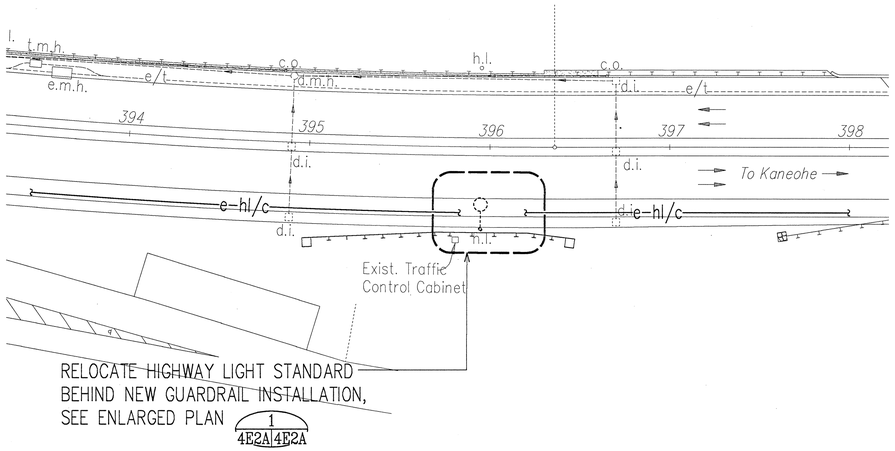

HIGHWAY LIGHTING RELOCATION PLAN

SCALE: 1"=40'

NORTH

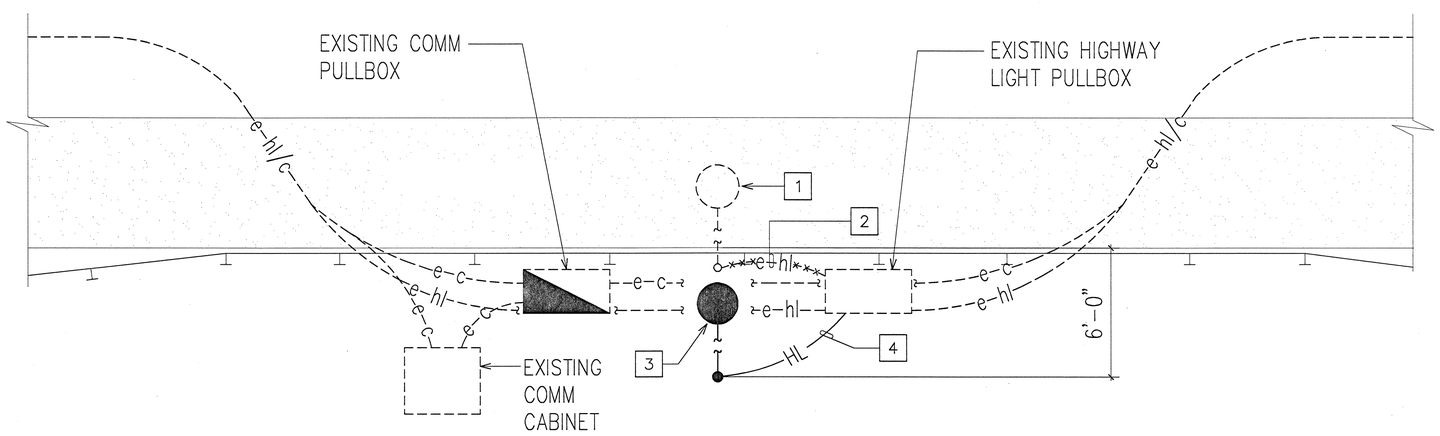

1 / 4E2A 4E2A HIGHWAY LIGHT STANDARD RELOCATION PLAN

NOT TO SCALE

NORTH

PLAN NOTES:

1. EXISTING HIGHWAY LIGHT STANDARD, BRACKET ARM AND LUMINAIRE TO BE RELOCATED. DEMOLISH AND REMOVE CONCRETE BASE AND ANCHOR BOLTS TO 12" BELOW GRADE.
2. REMOVE HIGHWAY LIGHT WIRES, ABANDON CONDUIT BELOW GRADE.
3. RELOCATED EXISTING HIGHWAY LIGHT STANDARD, BRACKET ARM, AND LUMINAIRE ONTO NEW CONCRETE BASE, SEE DETAIL 4 / 4E2A 4E3
4. PROVIDE 2" CONDUIT, 2#6, 1#8 GROUND FROM EXISTING HIGHWAY LIGHT PULLBOX TO THE RELOCATED HIGHWAY LIGHT STANDARD, SEE DETAIL 5 / 4E2A 4E3

40' 20' 0 40' 80' 120'

SCALE: 1"=40'

GRAPHIC SCALE

ANDREW I. MIYASATO LICENSED PROFESSIONAL ENGINEER No. 4340-E HAWAII, U.S.A.

THIS WORK WAS PREPARED BY ME OR UNDER MY SUPERVISION.

Andrew I. Miyasato

RONALD N. S. HO & ASSOC., INC. ELECTRICAL ENGINEERS

DATE	REVISION
11/7/97	ADDED NEW SHEET FOR ADDITIONAL AREA OF LIGHTING MODIFICATION WORK

STATE OF HAWAII
DEPARTMENT OF TRANSPORTATION
HIGHWAYS DIVISION

NORTH HALAWA VALLEY
ROADWAY CONSTRUCTION

HIGHWAY LIGHTING RELOCATION PLANS

H-3 FINISH (UNIT II)
FAIP NO. I-H3-1(75), UNIT II
LEEWARD SECTION

SCALE: AS NOTED DATE: FEB. 1997

SHEET No. 4E2A OF 3 SHEETS

C.O. 822 S-1

ORIGINAL PLAN | SURVEY PLOTTED BY | DRAWN BY | TRACED BY | DESIGNED BY | QUANTITIES BY | CHECKED BY | DATE
NOTE BOOK | No.

LAST SAVE: 11/03/97 @ 12:23:29 BY: AM PLOT SC 1=40
C:\CAD\PROJECTS\32001\32001\32001-2A_PKG_X08CT2 XSPLAN-C VCAD\PROJECTS\GENERAL\32002\32002\32002\X08R01\X08R1LAN.DWG

FED. ROAD DIST. NO.	STATE	PROJ. NO.	FISCAL YEAR	SHEET NO.	TOTAL SHEETS
HAWAII	HAW.	I-H3-1(75) UNIT II	1997	C.O. 822 S-1	1102

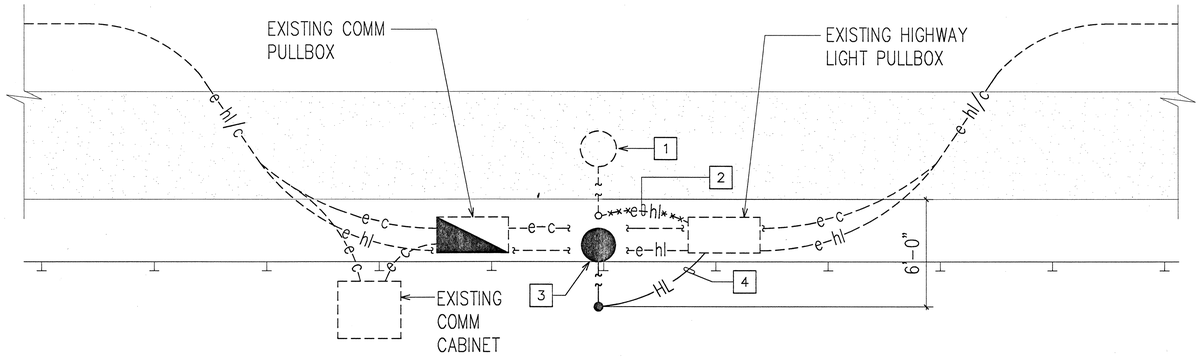

1 4E2A 4E2B HIGHWAY LIGHT STANDARD RELOCATION PLAN
NOT TO SCALE

PLAN NOTES:

1. EXISTING HIGHWAY LIGHT STANDARD, BRACKET ARM AND LUMINAIRE TO BE RELOCATED. DEMOLISH AND REMOVE CONCRETE BASE AND ANCHOR BOLTS TO 12" BELOW GRADE.
2. REMOVE HIGHWAY LIGHT WIRES, ABANDON CONDUIT BELOW GRADE.
3. RELOCATED EXISTING HIGHWAY LIGHT STANDARD, BRACKET ARM, AND LUMINAIRE ONTO NEW CONCRETE BASE, SEE DETAIL 4 / 4E2B 4E3
4. PROVIDE 2" CONDUIT, 2#6, 1#8 GROUND FROM EXISTING HIGHWAY LIGHT PULLBOX TO THE RELOCATED HIGHWAY LIGHT STANDARD, SEE DETAIL 5 / 4E2B 4E3

ANDREW I. MIYASATO
LICENSED PROFESSIONAL ENGINEER
No. 4340-E
HAWAII, U.S.A.

THIS WORK WAS PREPARED BY ME OR UNDER MY SUPERVISION.
Andrew I. Miyasato
RONALD N. S. HO & ASSOC., INC.
ELECTRICAL ENGINEERS

DATE	REVISION
10/31/97	ADDED NEW SHEET FOR HIGHWAY LIGHT RELOCATION DETAIL AND NOTES

STATE OF HAWAII
DEPARTMENT OF TRANSPORTATION
HIGHWAYS DIVISION

NORTH HALAWA VALLEY
ROAD CONSTRUCTION

HIGHWAY LIGHT RELOCATION PLAN

H-3 FINISH (UNIT II)
FAIP NO. I-H3-1(75), UNIT II
LEEWARD SECTION

SCALE: AS NOTED DATE: FEB. 1997

SHEET No. 4E2B OF 3 SHEETS

ORIGINAL PLAN | SURVEY PLOTTED BY | DATE
DRAWN BY
TRACED BY
DESIGNED BY
QUANTITIES BY
CHECKED BY
SUBMITTED BY
APPROVED BY
No. | REVISION | DATE

LAST SAVE: 10/28/97 @ 09:06:28 BY: AM PLOT SC: 1/4"=1'
G:\AGAY\PROJECTS\822\822S1\822PLA.DWG PS: 822SET2

FED. ROAD DIST. NO.	STATE	PROJ. NO.	FISCAL YEAR	SHEET NO.	TOTAL SHEETS
HAWAII	HAW.	I-H3-1(75) UNIT II	1997	C.O. 822 S-3	1102

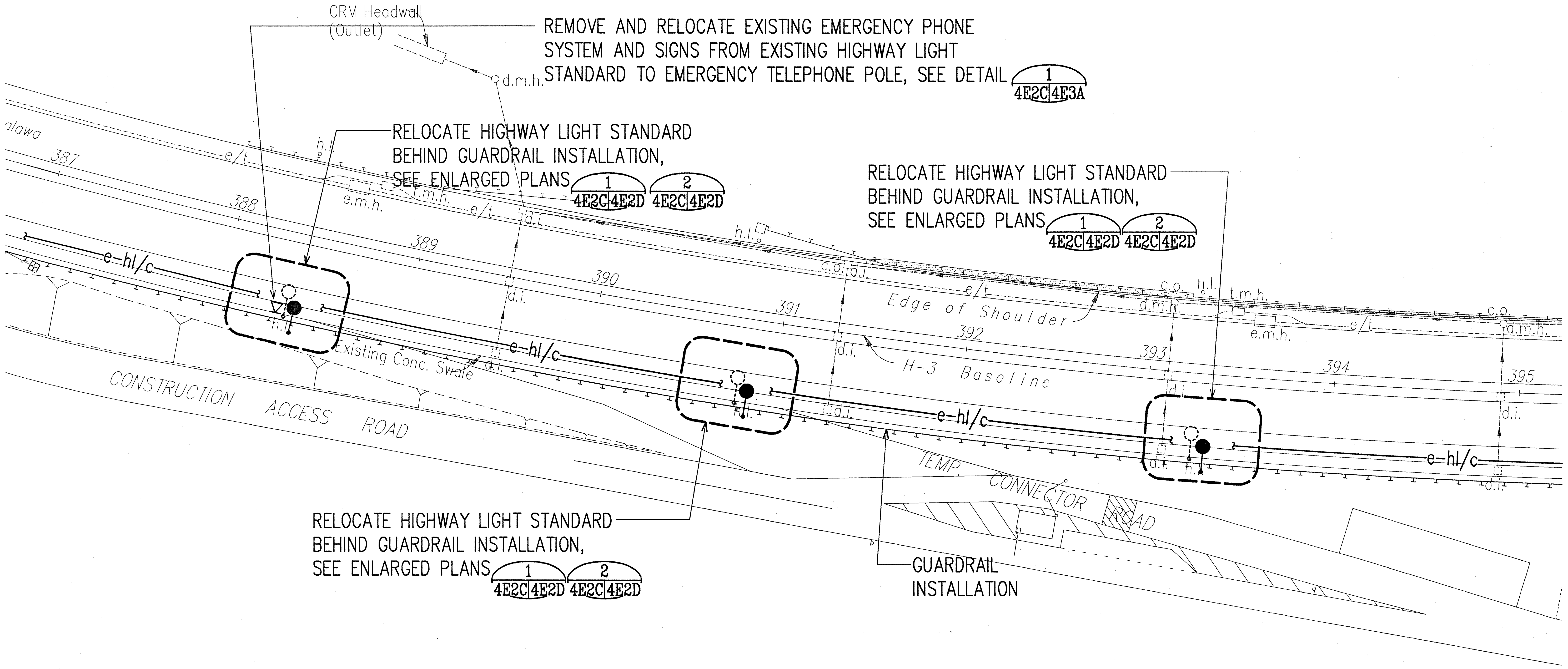

HIGHWAY LIGHTING RELOCATION PLAN

SCALE: 1"=40'

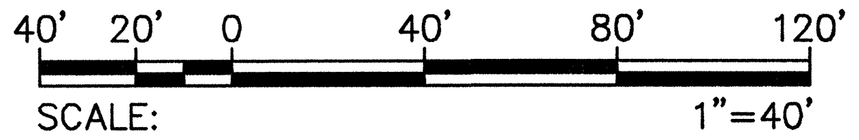

SCALE: 1"=40'

GRAPHIC SCALE

DATE	REVISION
3/3/98	ADDED NEW SHEET FOR ADDITIONAL AREA OF LIGHTING MODIFICATION WORK

ANDREW I. MIYASATO
LICENSED PROFESSIONAL ENGINEER
No. 4340-E
HAWAII, U.S.A.

THIS WORK WAS PREPARED BY ME OR UNDER MY SUPERVISION.
Andrew I. Miyasato
2/27/98
RONALD N. S. HO & ASSOC., INC.
ELECTRICAL ENGINEERS

STATE OF HAWAII
DEPARTMENT OF TRANSPORTATION
HIGHWAYS DIVISION
NORTH HALAWA VALLEY
ROADWAY CONSTRUCTION
HIGHWAY LIGHTING RELOCATION WORK
H-3 FINISH (UNIT II)
FAIP NO. I-H3-1(75), UNIT II
LEEWARD SECTION
SCALE: AS NOTED DATE: FEB. 1998
SHEET No. 4E2C OF 3 SHEETS

ORIGINAL PLAN
NOTE BOOK
No.
SURVEY PLOTTED BY___ DATE___
DRAWN BY
TRACED BY
DESIGNED BY
QUANTITIES BY
CHECKED BY

FED. ROAD DIST. NO.	STATE	PROJ. NO.	FISCAL YEAR	SHEET NO.	TOTAL SHEETS
HAWAII	HAW.	I-H3-1(75) UNIT II	1997	C.O. 822 S-4	1102

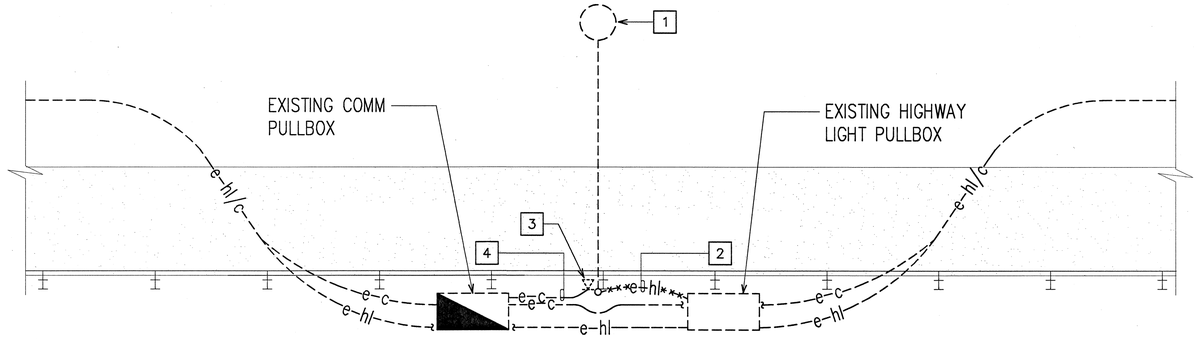

1 / 4E2C|4E2D TYPICAL HIGHWAY LIGHT STANDARD RELOCATION PLAN I
NOT TO SCALE

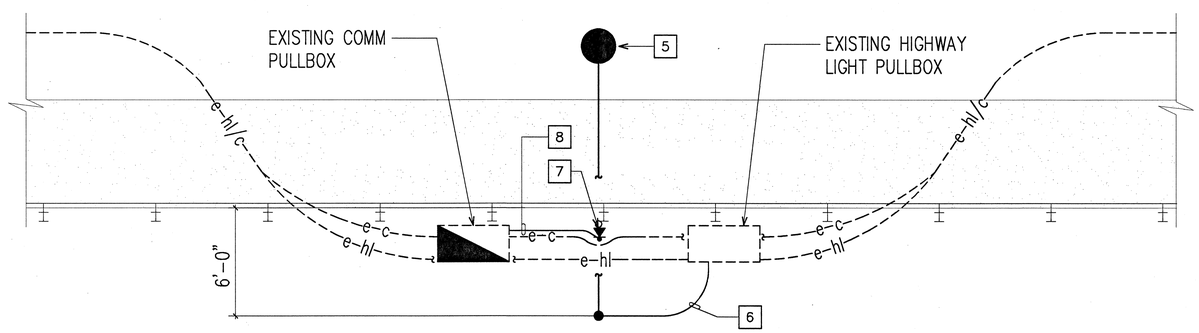

2 / 4E2C|4E2D TYPICAL HIGHWAY LIGHT STANDARD RELOCATION PLAN II
NOT TO SCALE

PLAN NOTES:

1. EXISTING HIGHWAY LIGHT STANDARD, BRACKET ARM AND LUMINAIRE TO BE RELOCATED. DEMOLISH AND REMOVE CONCRETE BASE AND ANCHOR BOLTS TO 12" BELOW GRADE.
2. REMOVE HIGHWAY LIGHT WIRES, ABANDON CONDUIT BELOW GRADE.
3. EXISTING EMERGENCY PHONE SYSTEM TO BE REMOVED AND RELOCATED ONTO NEW POLE. EXISTING EMERGENCY PHONE SYSTEM ONLY AT HIGHWAY LIGHT STANDARD LOCATION STA. 388+35.
4. PULL OUT EXISTING WIRES AND REINSTALL NEW CONDUIT, AT NEW EMERGENCY PHONE LOCATION. BE CAREFUL NOT TO DAMAGE CABLE.
5. RELOCATED EXISTING HIGHWAY LIGHT STANDARD, BRACKET ARM, AND LUMINAIRE ONTO NEW CONCRETE BASE, SEE DETAIL 4 / 4E2D|4E3
6. PROVIDE 2" PVC, SCH 80 CONDUIT, 2#6, 1#8 GROUND FROM EXISTING HIGHWAY LIGHT PULLBOX TO THE RELOCATED HIGHWAY LIGHT STANDARD, SEE DETAIL 5 / 4E2D|4E3 EXISTING EMERGENCY PHONE SYSTEM ONLY AT HIGHWAY LIGHT STANDARD LOCATION STA. 388+35.
7. RELOCATED EXISTING EMERGENCY PHONE SYSTEM ON NEW POLE, SEE DETAIL 1 / 4E2D|4E3A
8. PROVIDE 1" RGS CONDUIT, AND REINSTALL EXISTING COMMUNICATION CABLE, AND RECONNECT TO EMERGENCY PHONE SYSTEM. TEST EMERGENCY PHONE SYSTEM TO INSURE PROPER OPERATION. SEE DETAIL 1 / 4E2D|4E3A

DATE	REVISION
3/3/98	ADDED NEW SHEET FOR HIGHWAY LIGHT STANDARD DETAIL RELOCATION PLANS

ANDREW I. MIYASATO
LICENSED PROFESSIONAL ENGINEER
No. 4340-E
HAWAII, U.S.A.

THIS WORK WAS PREPARED BY ME OR UNDER MY SUPERVISION.
Andrew I. Miyasato
2/27/98
RONALD B. S. HO & ASSOC., INC.
ELECTRICAL ENGINEERS

STATE OF HAWAII
DEPARTMENT OF TRANSPORTATION
HIGHWAYS DIVISION

NORTH HALAWA VALLEY
ROADWAY CONSTRUCTION

HIGHWAY LIGHT RELOCATION PLANS

H-3 FINISH (UNIT II)
FAIP NO. I-H3-1(75), UNIT II
LEEWARD SECTION

SCALE: AS NOTED DATE: FEB. 1998

SHEET No. 4E2D OF 3 SHEETS

C.O. 822 S-4

ORIGINAL PLAN
SURVEY PLOTTED BY
DRAWN BY
TRACED BY
DESIGNED BY
QUANTITIES BY
CHECKED BY
DATE
NOTE BOOK
No.

LAST SAVE: 02/27/98 @ 13:38:23 AM PLOT SCALE: 1"=20'
Q:\AMY\Projects\HIGHWAYS\NORTH HALAWA\C.O. 822 S-4\C.O. 822 S-4 (4E2D).DGN

FED. ROAD DIST. NO.	STATE	PROJ. NO.	FISCAL YEAR	SHEET NO.	TOTAL SHEETS
HAWAII	HAW.	I-H3-1(75) UNIT II	1997	C.O. 823	1102

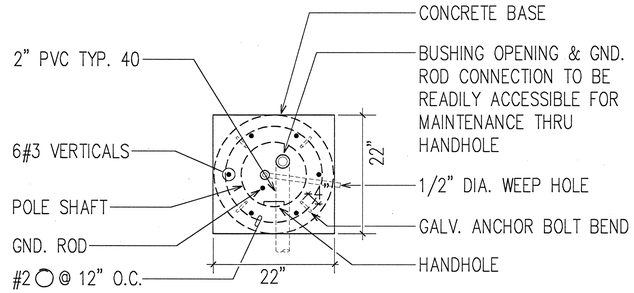

1 / 4E3|4E3 CONCRETE BASE PLAN
N.T.S.

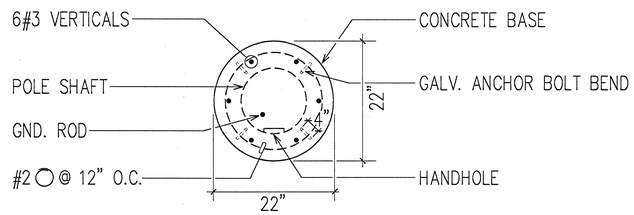

2 / 4E3|4E3 CONCRETE BASE PLAN
N.T.S.

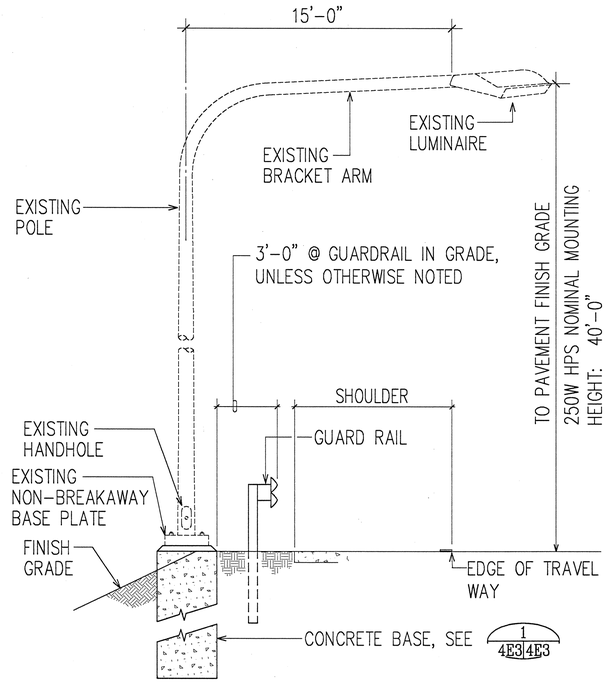

ELEVATION

4 / 4E2|4E3 HIGHWAY LIGHTING STANDARD DETAIL
4E2B
N.T.S.

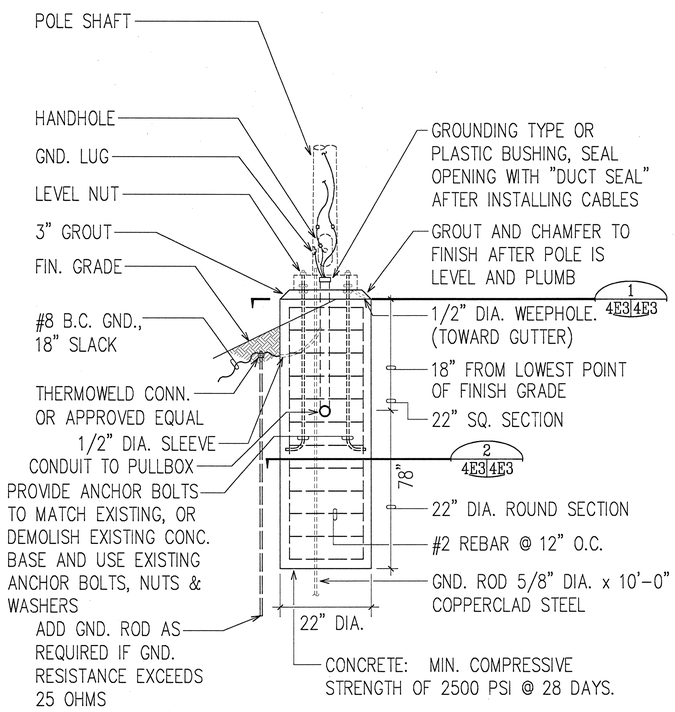

3 / 4E3|4E3 CONCRETE BASE ELEVATION
N.T.S.

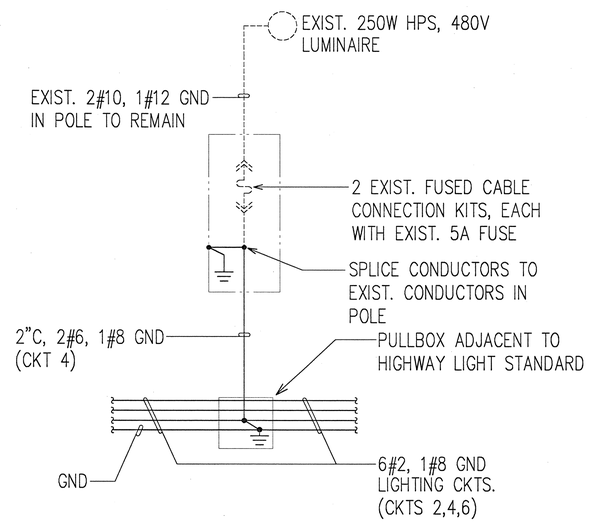

5 / 4E2|4E3 HIGHWAY LIGHT WIRING DIAGRAM
4E2B

DATE	REVISION
10/31/97	REVISED MOUNTING CLEARANCE BEHIND GUARD RAIL

STATE OF HAWAII
DEPARTMENT OF TRANSPORTATION
HIGHWAYS DIVISION

NORTH HALAWA VALLEY
ROAD CONSTRUCTION

HIGHWAY LIGHT BASE DETAILS

H-3 FINISH (UNIT II)
FAIP NO. I-H3-1(75), UNIT II
LEEWARD SECTION

SCALE: AS NOTED DATE: FEB. 1997

SHEET No. 4E3 OF 3 SHEETS

ANDREW I. MIYASATO
LICENSED PROFESSIONAL ENGINEER
No. 4340-E
HAWAII, U.S.A.

THIS WORK WAS PREPARED BY ME OR UNDER MY SUPERVISION.
Andrew I. Myasato
RONALD N. S. HO & ASSOC., INC.
ELECTRICAL ENGINEERS

ORIGINAL PLAN | SURVEY PLOTTED BY | DRAWN BY | TRACED BY | DESIGNED BY | QUANTITIES BY | CHECKED BY | DATE
NOTE BOOK | No.

LAST SAVE: 10/29/97 10:49:23 AM
C:\AUTOCAD\PROJECTS\97A\97A0001\97A0001\97A0001 SE1-D-L.DWG

C.O. 823

FED. ROAD DIST. NO.	STATE	PROJ. NO.	FISCAL YEAR	SHEET NO.	TOTAL SHEETS
HAWAII	HAW.	I-H3-1(75) UNIT II	1997	C.O. 823 S-1	1102

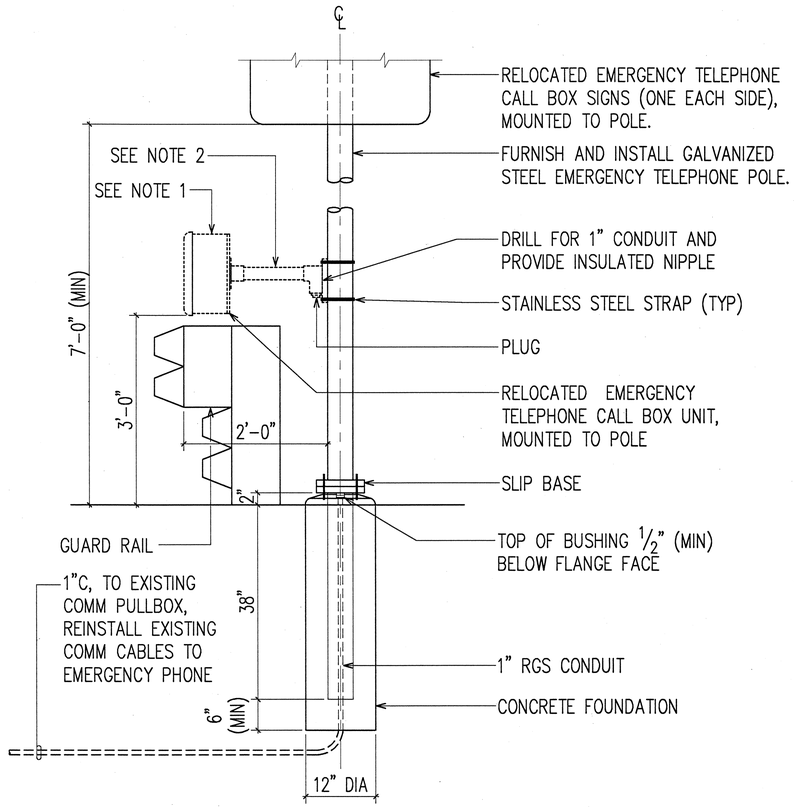

ELEVATION VIEW

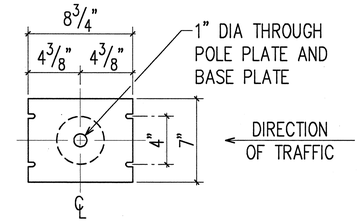

POLE SLIP BASE DETAIL – TOP VIEW

NOTES:

1. EMERGENCY TELEPHONE POLE AND EMERGENCY TELEPHONE CALL BOX UNIT SHALL BE GROUNDED, ACCORDING TO NEC.
2. ADJUST CONDUIT LENGTH AS REQUIRED TO FIT LOCATION.

1 / 4E2D 4E3A INSTALLATION DETAIL OF RELOCATED EMERGENCY PHONE AND SIGNS ON EMERGENCY TELEPHONE POLE

NOT TO SCALE

DATE	REVISION
3/3/98	ADDED NEW SHEET FOR EMERGENCY PHONE RELOCATION DETAILS

ANDREW I. MIYASATO
LICENSED PROFESSIONAL ENGINEER
No. 4340-E
HAWAII, U.S.A.

THIS WORK WAS PREPARED BY ME OR UNDER MY SUPERVISION.
Andrew I. Miyasato
7/27/98
RONALD N. S. HO & ASSOC., INC.
ELECTRICAL ENGINEERS

STATE OF HAWAII
DEPARTMENT OF TRANSPORTATION
HIGHWAYS DIVISION

NORTH HALAWA VALLEY
ROADWAY CONSTRUCTION

EMERGENCY PHONE RELOCATION DETAILS

H-3 FINISH (UNIT II)
FAIP NO. I-H3-1(75), UNIT II
LEEWARD SECTION

SCALE: AS NOTED DATE: FEB. 1998

SHEET No. 4E3A OF 3 SHEETS

C.O. 823 S-1

ORIGINAL PLAN | SURVEY PLOTTED BY | DRAWN BY | TRACED BY | DESIGNED BY | QUANTITIES BY | CHECKED BY | DATE
NOTE BOOK | No.

LAST SAVE: 07/27/98 @ 15:27:21 BY: AM FOT SC1.dgn
C:\AUTOCAD\ROH\HWY\HWY\SIGNS\SIGNS\SIGNS\SIGNS.DGN

FED. ROAD DIST. NO.	STATE	PROJ. NO.	FISCAL YEAR	SHEET NO.	TOTAL SHEETS
HAWAII	HAW.	I-H3-1(75) UNIT II	1997	824	1102

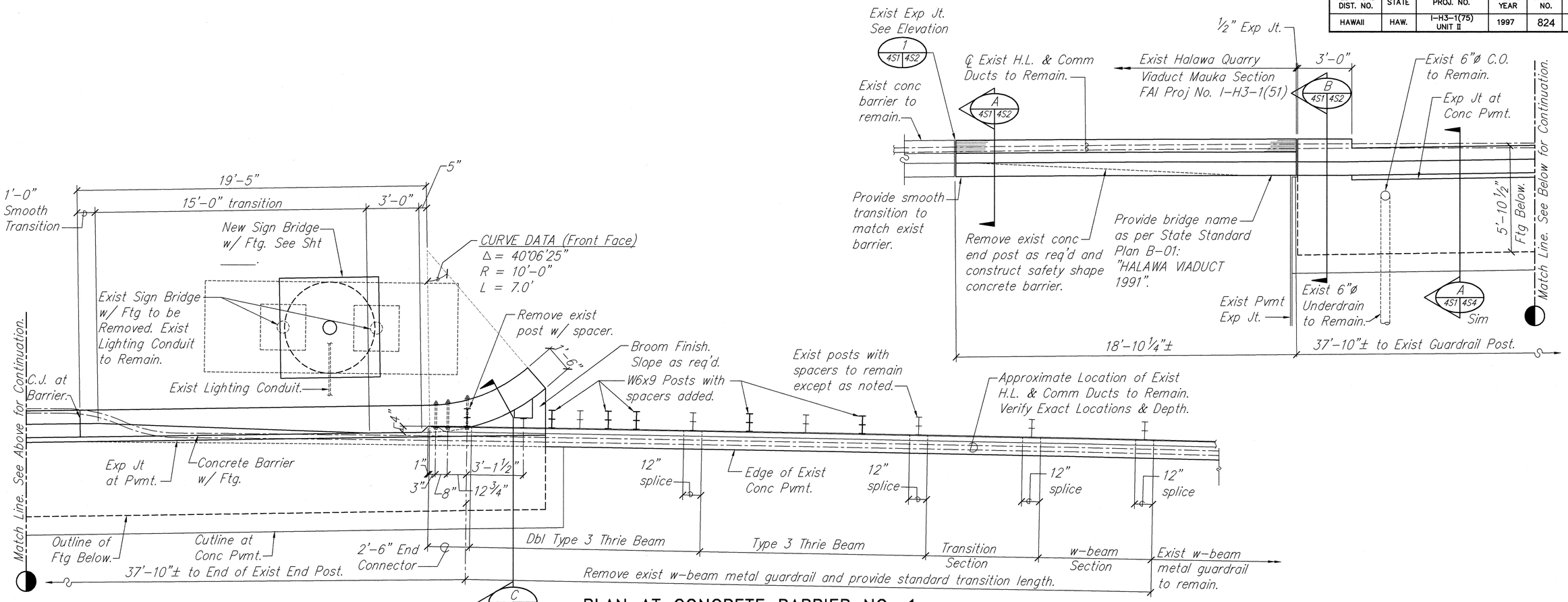

PLAN AT CONCRETE BARRIER NO. 1

Scale: 3/8" = 1'-0"

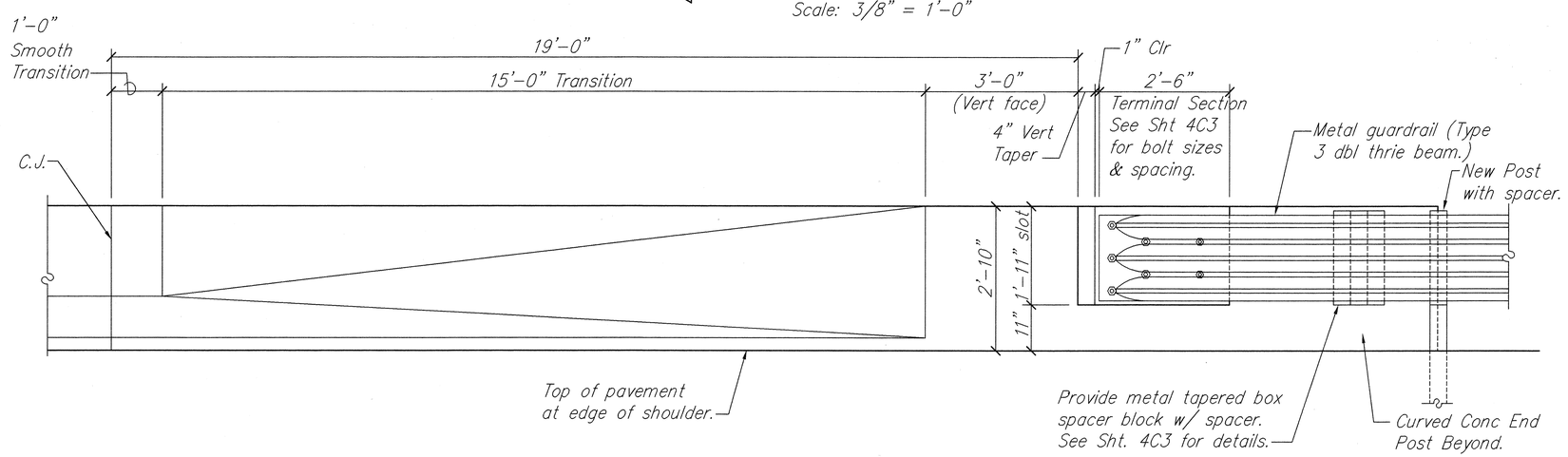

PARTIAL ELEVATION AT GUARDRAIL CONNECTION AT CONCRETE BARRIER NO. 1

Scale: 3/4" = 1'-0"

Notes:
1. See Sheet 4S4 for Concrete Barrier and Guardrail General Notes.
2. For typical metal guardrail details not shown see sheet 4C3.

ORIGINAL PLAN | NOTE BOOK No. ____ | SURVEY PLOTTED BY ____ DATE ____ | DRAWN BY ____ | TRACED BY ____ | DESIGNED BY ____ | QUANTITIES BY ____ | CHECKED BY ____

RANDAL S. FUROMOTO LICENSED PROFESSIONAL ENGINEER No.6130-S HAWAII, U.S.A.

Signature

This work was prepared by me or under my supervision.

STATE OF HAWAII
DEPARTMENT OF TRANSPORTATION
HIGHWAYS DIVISION
NORTH HALAWA VALLEY
BARRIER AND GUARDRAIL MODIFICATIONS
CONCRETE BARRIER NO. 1

H-3 FINISH (UNIT II)
FAIP NO. I-H3-1(75), UNIT II
LEEWARD SECTION

SCALE: AS NOTED DATE: FEB 1997

SHEET No. 4S1 OF 10 SHEETS

824

FED. ROAD DIST. NO.	STATE	PROJ. NO.	FISCAL YEAR	SHEET NO.	TOTAL SHEETS
HAWAII	HAW.	I-H3-1(75) UNIT II	1997	825	1102

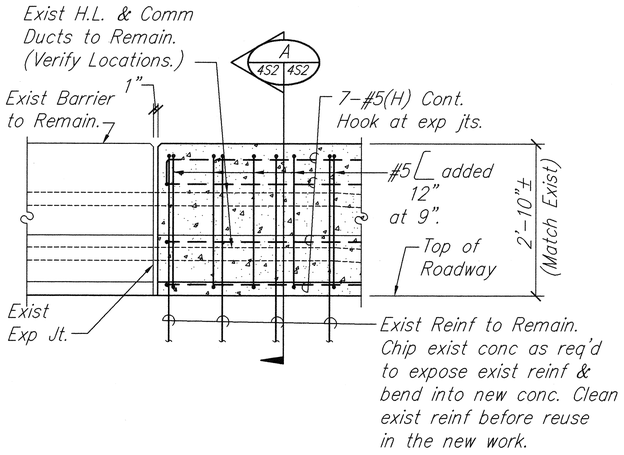

ELEVATION AT EXP JT

Scale: 3/4" = 1'-0"

1 / 4S1 4S2 — 4S3

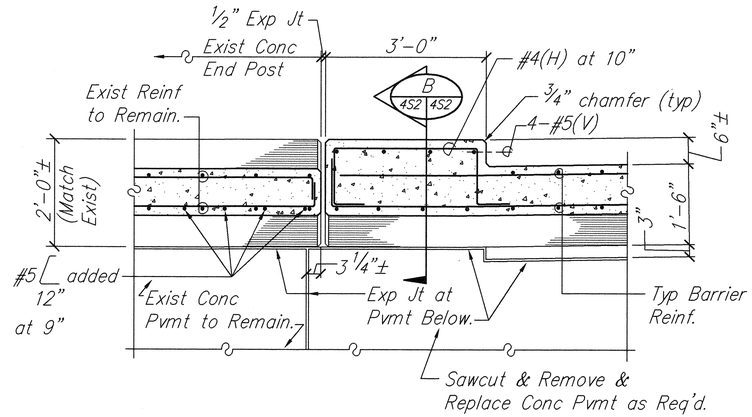

PLAN/SECTION

Scale: 3/4" = 1'-0"

2 / 4S2 4S2 — 4S3

Note: See Sheet 4S4 For Concrete Barrier and Guardrail General Notes.

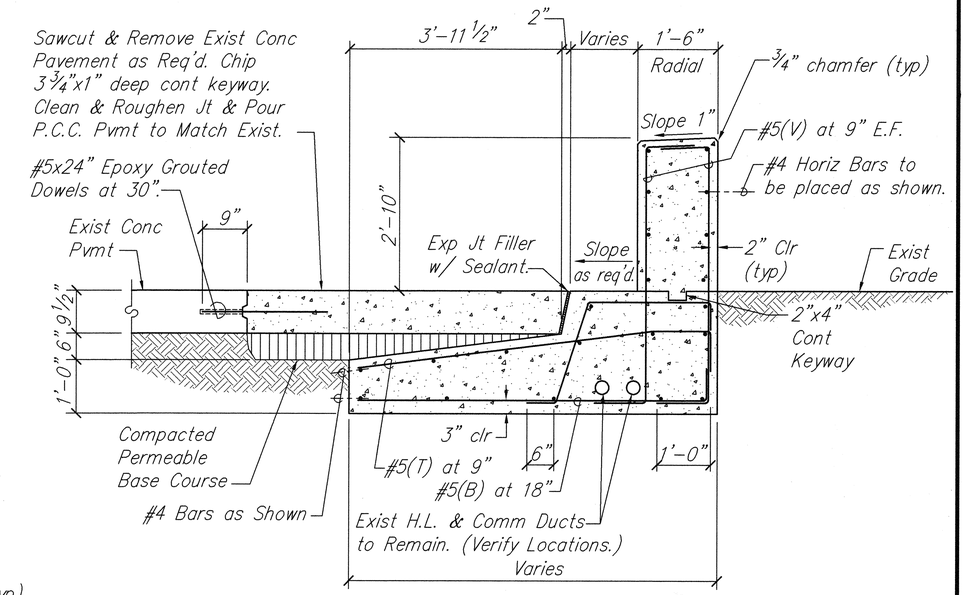

SECTION

Scale: 3/4" = 1'-0"

C / 4S1 4S2

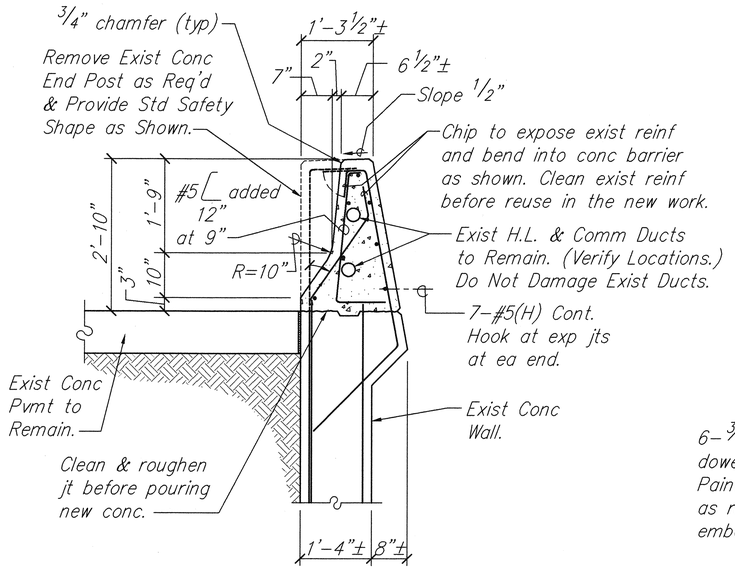

SECTION THRU EXIST END POST

Scale: 3/4" = 1'-0"

A / 4S1 4S2 — 4S2 / 4S3

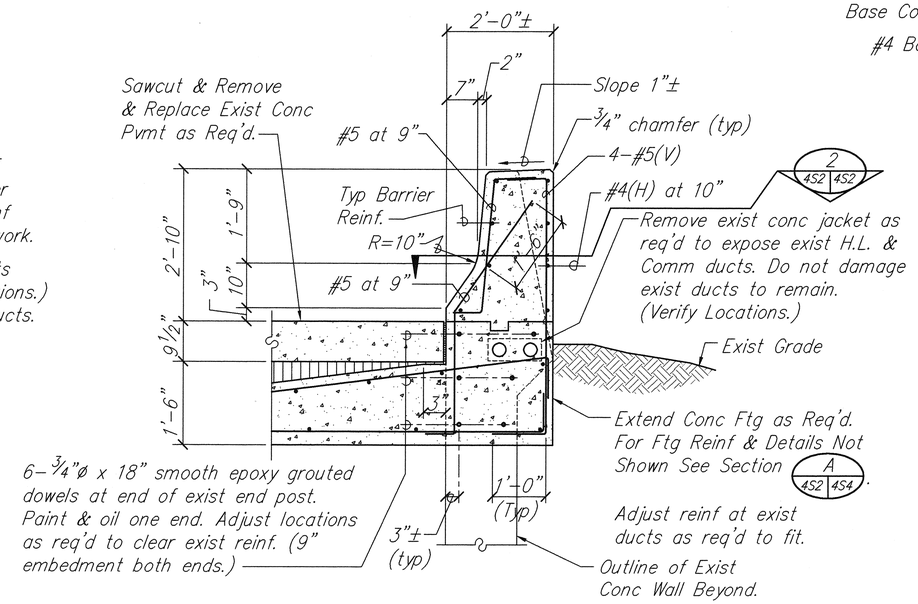

SECTION

Scale: 3/4" = 1'-0"

B / 4S1 4S2 — 4S2

ORIGINAL PLAN		DATE
	SURVEY PLOTTED BY	
	DRAWN BY	
	TRACED BY	
	DESIGNED BY	
NOTE BOOK	QUANTITIES BY	
No.	CHECKED BY	

RANDAL S. FUROMOTO — LICENSED PROFESSIONAL ENGINEER No.6130-S — HAWAII, U.S.A.

Signature

This work was prepared by me or under my supervision.

STATE OF HAWAII
DEPARTMENT OF TRANSPORTATION
HIGHWAYS DIVISION
NORTH HALAWA VALLEY
BARRIER AND GUARDRAIL MODIFICATIONS
CONCRETE BARRIER NO. 1

H-3 FINISH (UNIT II)
FAIP NO. I-H3-1(75), UNIT II
LEEWARD SECTION

SCALE: AS NOTED DATE: FEB 1997

SHEET No. 4S2 OF 10 SHEETS

FED. ROAD DIST. NO.	STATE	PROJ. NO.	FISCAL YEAR	SHEET NO.	TOTAL SHEETS
HAWAII	HAW.	I-H3-1(75) UNIT II	1997	826	1102

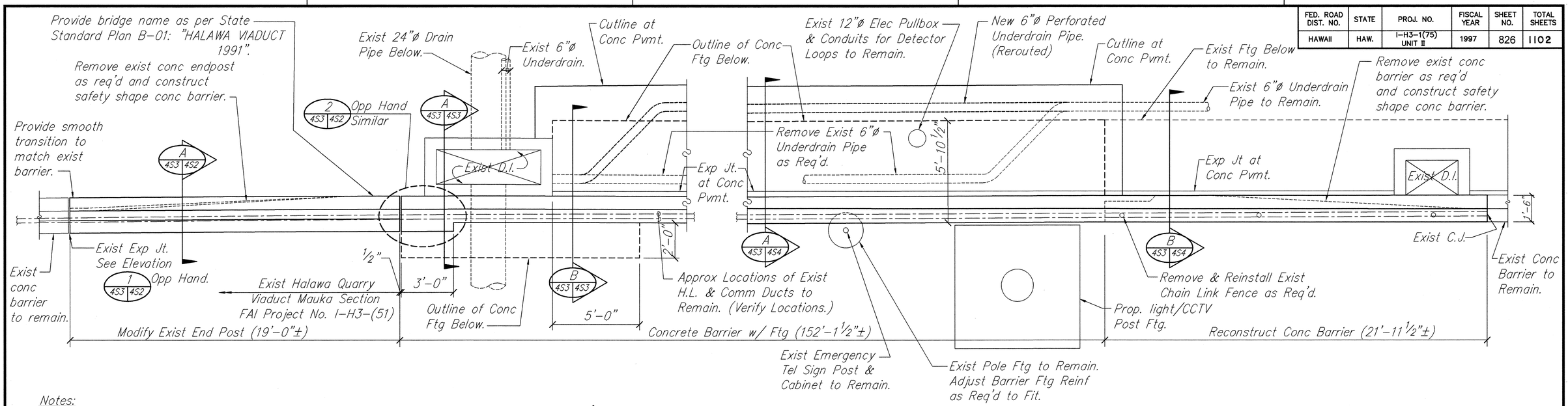

PLAN/SECTION AT CONCRETE BARRIER NO. 2

Scale: 3/8" = 1'-0"

Notes:

1. See Sheet 4S4 for Concrete Barrier and Guardrail General Notes.
2. Concrete Barrier construction and expansion joints shall be located by the Contractor as approved by the Engineer. See Detail 1 (4S3 | 4S4) for joint layout. Refer to State Standard Plan B-01 for barrier wall joint details.

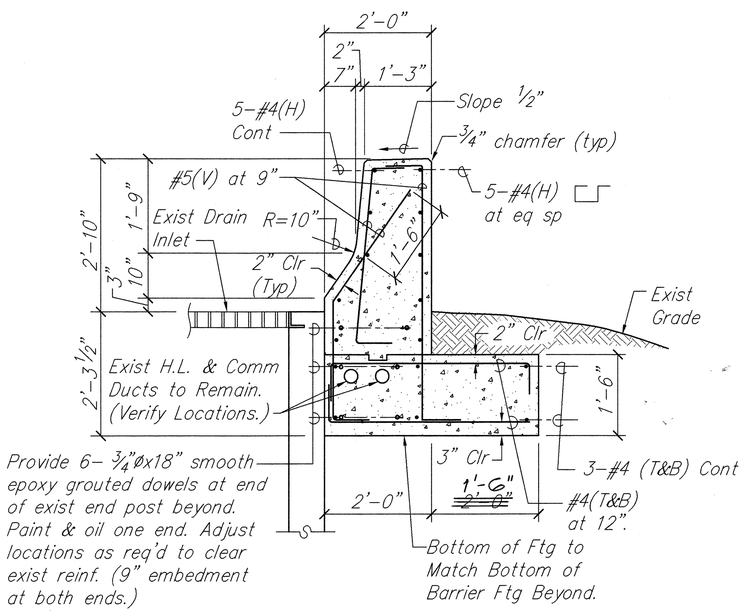

SECTION A (4S3 | 4S3)

Scale: 3/4" = 1'-0"

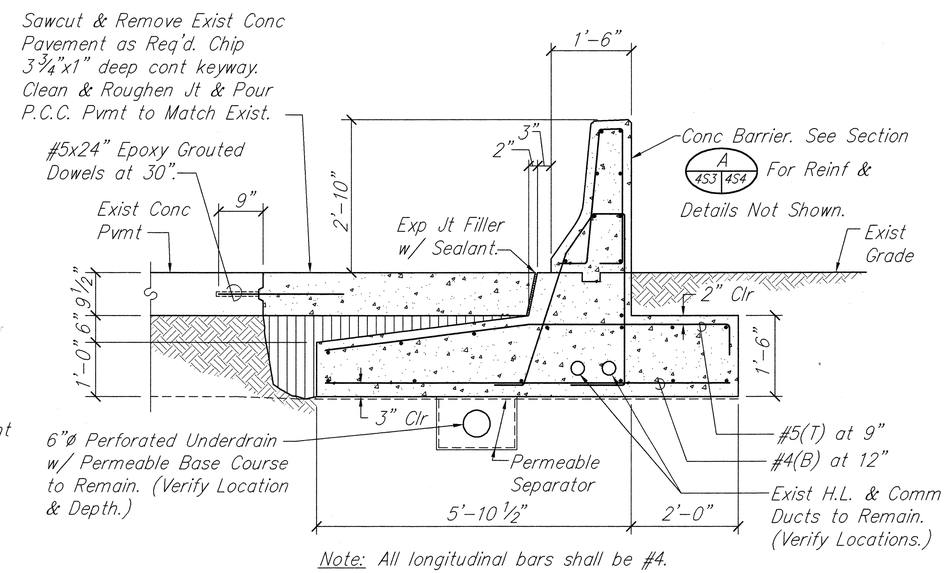

Note: All longitudinal bars shall be #4.

SECTION B (4S3 | 4S3)

Scale: 3/4" = 1'-0"

ORIGINAL PLAN	SURVEY PLOTTED BY	DATE
	DRAWN BY	
NOTE BOOK	TRACED BY	
	DESIGNED BY	
	QUANTITIES BY	
No.	CHECKED BY	

RANDAL S. FUROMOTO — LICENSED PROFESSIONAL ENGINEER No.6130-S — HAWAII, U.S.A.

Signature

This work was prepared by me or under my supervision.

STATE OF HAWAII
DEPARTMENT OF TRANSPORTATION
HIGHWAYS DIVISION

NORTH HALAWA VALLEY
BARRIER AND GUARDRAIL MODIFICATIONS
CONCRETE BARRIER NO. 2

H-3 FINISH (UNIT II)
FAIP NO. I-H3-1(75), UNIT II
LEEWARD SECTION

SCALE: AS NOTED DATE: FEB 1997

SHEET No. 4S3 OF 10 SHEETS

FED. ROAD DIST. NO.	STATE	PROJ. NO.	FISCAL YEAR	SHEET NO.	TOTAL SHEETS
HAWAII	HAW.	I-H3-1(75) UNIT II	1997	827	1102

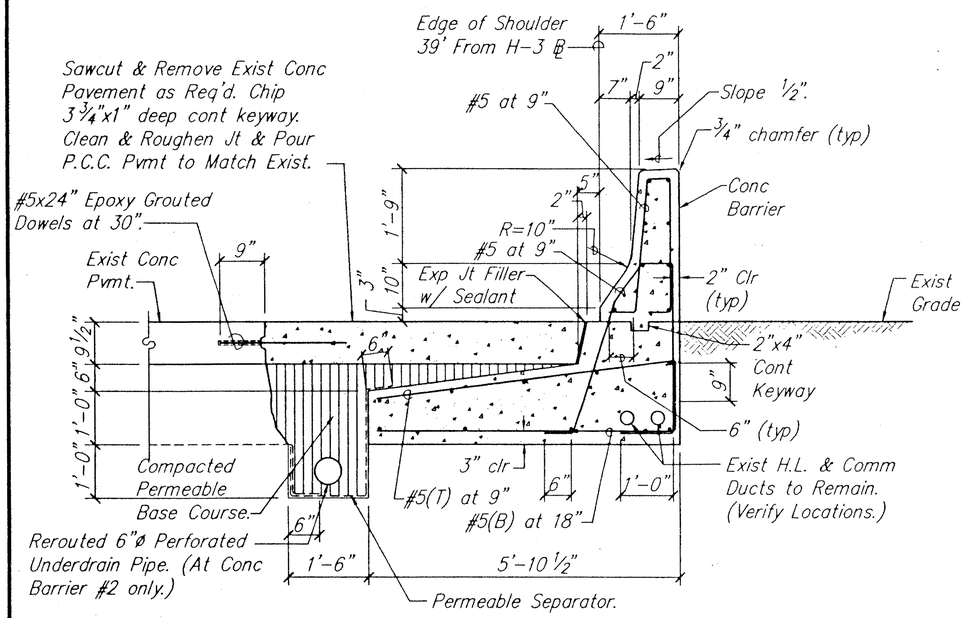

All longitudinal bars shall be #4.

SECTION AT TYP BARRIER FOOTING

Scale: 3/4" = 1'-0"

A 4S1 4S4

4S2
4S3

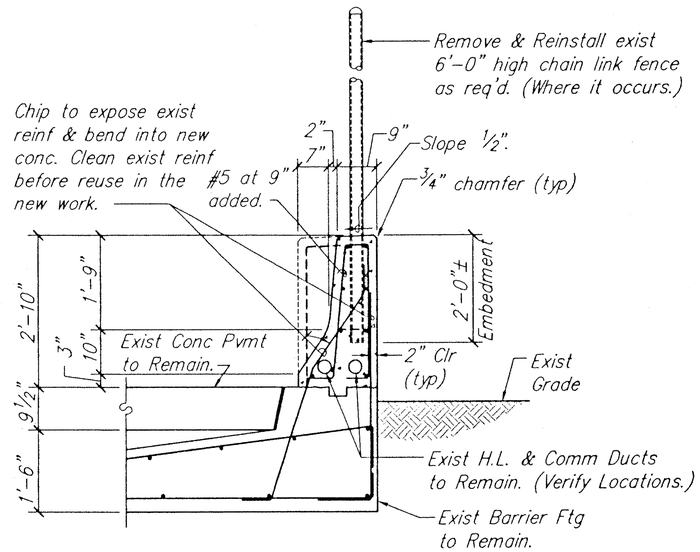

SECTION

Scale: 3/4" = 1'-0"

B 4S3 4S4

Concrete Barrier & Guardrail General Notes:

1. Contractor shall verify all dimensions and existing conditions before commencing work. Any discrepancies and/or inconsistencies shall be reported to the Engineer for clarification.
2. Existing duct locations shown are approximate. Contractor shall verify the actual locations (in plan and elevations) of the existing highway lighting and communication ducts. Concrete encasement shall be removed and ducts rerouted and/or adjusted as needed to install the barrier and guardrail work shown. Contractor shall exercise care during demolition and removal of concrete around ductlines to remain. Damaged ducts shall be removed and replaced as directed. Concrete encasement shall be replaced as needed upon completion of the foundation work.
3. Design Specifications: 15th Edition of AASHTO "Standard Specifications for Highway Bridges", 1992 with subsequent interim specifications.
4. See State Standard Plans for typical metal guardrail details not shown.
5. Refer to Sht 4C3 for typical end post connection details.
6. Concrete shall be Class A (f'c = 3,000 psi).
7. Reinforcing steel shall conform to ASTM A615, Grade 40.
8. All steel items exposed to weather shall be hot dipped galvanized after fabrication.
9. Structural steel shapes and plates shall conform to ASTM A36.
10. High strength anchor bolts shall conform to ASTM A325 and be galvanized.
11. Machine bolts shall conform to ASTM A307 and be galvanized.
12. Epoxy bonding agents shall conform to ASTM C881, Type IV or V, Class C, Grade as suitable for the use intended.

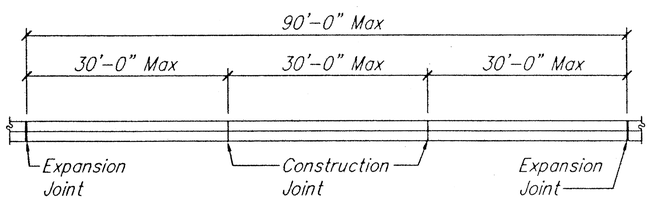

JOINT LAYOUT PLAN

Not to Scale

1 4S3 4S4

ORIGINAL PLAN	SURVEY PLOTTED BY	DATE
	DRAWN BY	"
	TRACED BY	"
NOTE BOOK	DESIGNED BY	"
No.	QUANTITIES BY	"
	CHECKED BY	"

RANDAL S. FUROMOTO ★ LICENSED PROFESSIONAL ENGINEER No.8130-S ★ HAWAII, U.S.A.

Signature

This work was prepared by me or under my supervision.

STATE OF HAWAII
DEPARTMENT OF TRANSPORTATION
HIGHWAYS DIVISION

NORTH HALAWA VALLEY
BARRIER AND GUARDRAIL CONNECTIONS
CONCRETE BARRIERS NO. 1 & 2

H-3 FINISH (UNIT II)
FAIP NO. I-H3-1(75), UNIT II
LEEWARD SECTION

SCALE: AS NOTED DATE: FEB 1997

SHEET No. 4S4 OF 10 SHEETS

FED. ROAD DIST. NO.	STATE	PROJ. NO.	FISCAL YEAR	SHEET NO.	TOTAL SHEETS
HAWAII	HAW.	I-H3-1(75) UNIT II	1997	828	1102

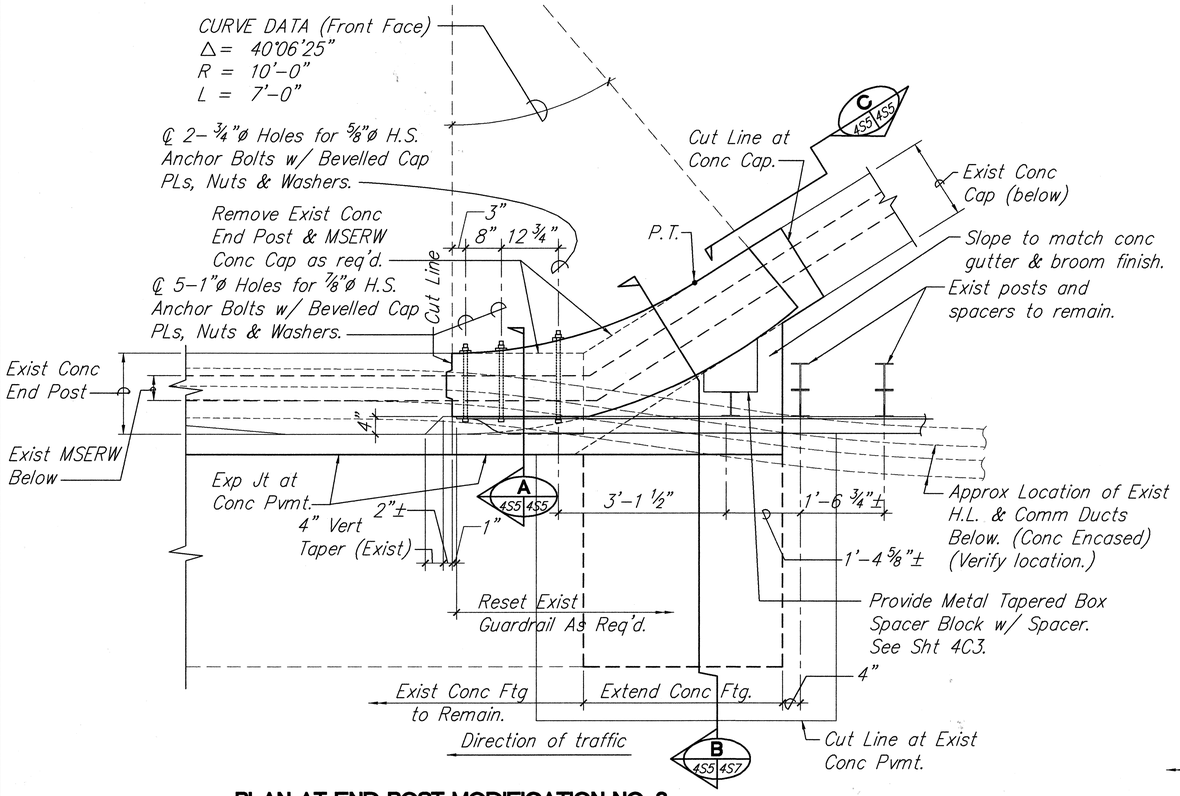

PLAN AT END POST MODIFICATION NO. 3

Scale: 3/4" = 1'-0"

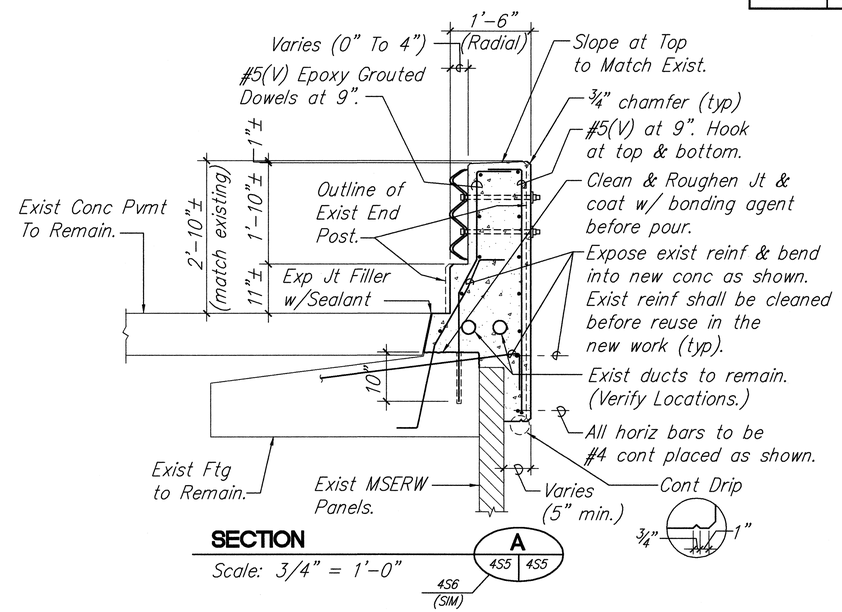

SECTION

Scale: 3/4" = 1'-0"

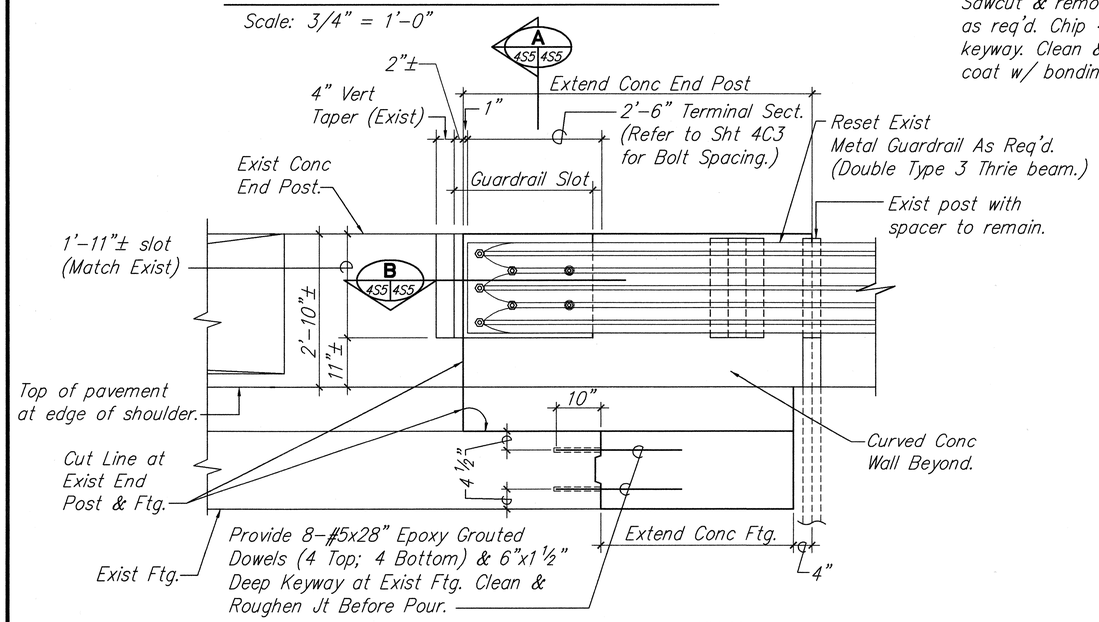

ELEVATION AT END POST MODIFICATION NO. 3

Scale: 3/4" = 1'-0"

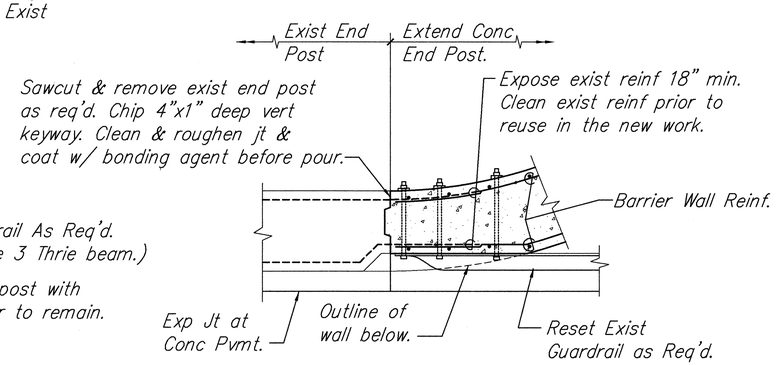

PLAN / SECTION

Scale: 3/4" = 1'-0"

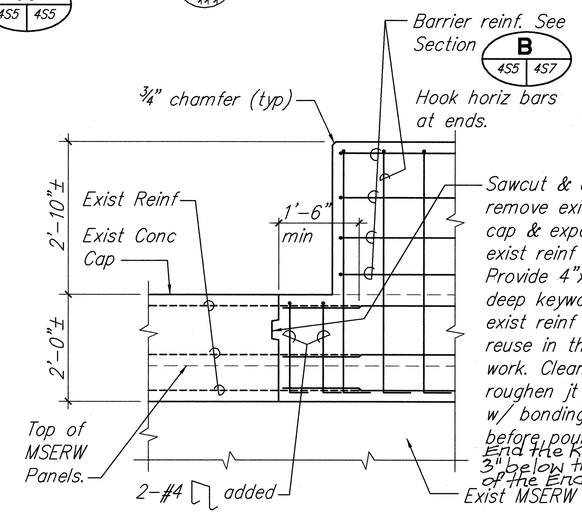

ELEVATION

Scale: 3/4" = 1'-0"

C 4S5 4S5
4S6

SURVEY PLOTTED BY
DRAWN BY
TRACED BY
NOTE BOOK
VERIFIED BY
QUANTITIES BY
CHECKED BY
DATE
ORIGINAL PLAN
No.

RANDAL S. FURUMOTO
LICENSED PROFESSIONAL ENGINEER
No.6130-S
HAWAII, U.S.A.

THIS WORK WAS PREPARED BY ME OR UNDER MY SUPERVISION.
Signature

STATE OF HAWAII
DEPARTMENT OF TRANSPORTATION
HIGHWAYS DIVISION
NORTH HALAWA VALLEY
BARRIER AND GUARDRAIL MODIFICATIONS
END POST MODIFICATION NO. 3

H-3 FINISH (UNIT II)
FAIP NO. I-H3-1(75), UNIT II
LEEWARD SECTION

SCALE: AS NOTED DATE: FEB 1997

SHEET No. 4S5 OF 10 SHEETS

FED. ROAD DIST. NO.	STATE	PROJ. NO.	FISCAL YEAR	SHEET NO.	TOTAL SHEETS
HAWAII	HAW.	I-H3-1(75) UNIT II	1997	829	1102

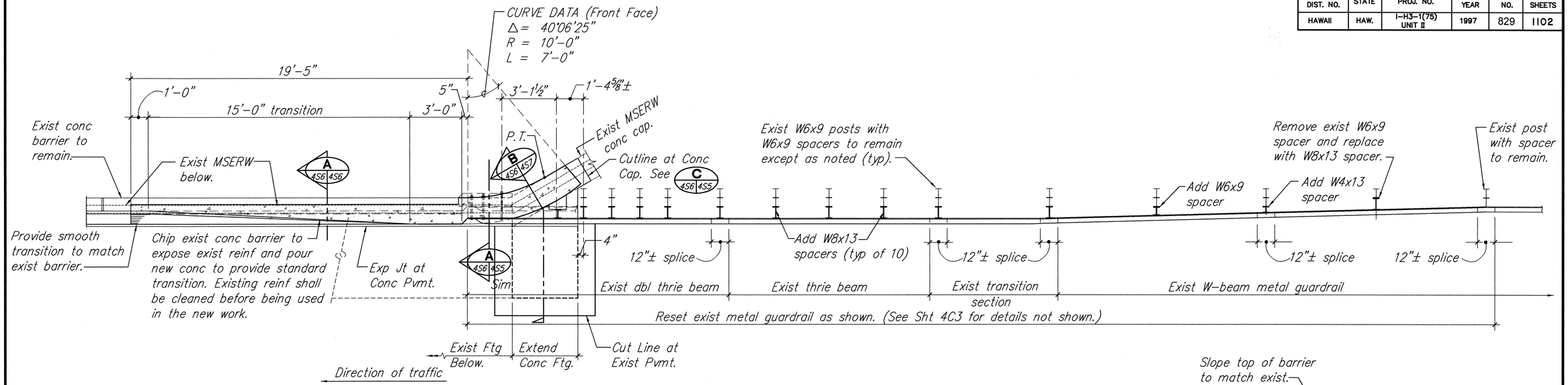

PLAN AT END POST MODIFICATION NO. 4

Scale: 3/8" = 1'-0"

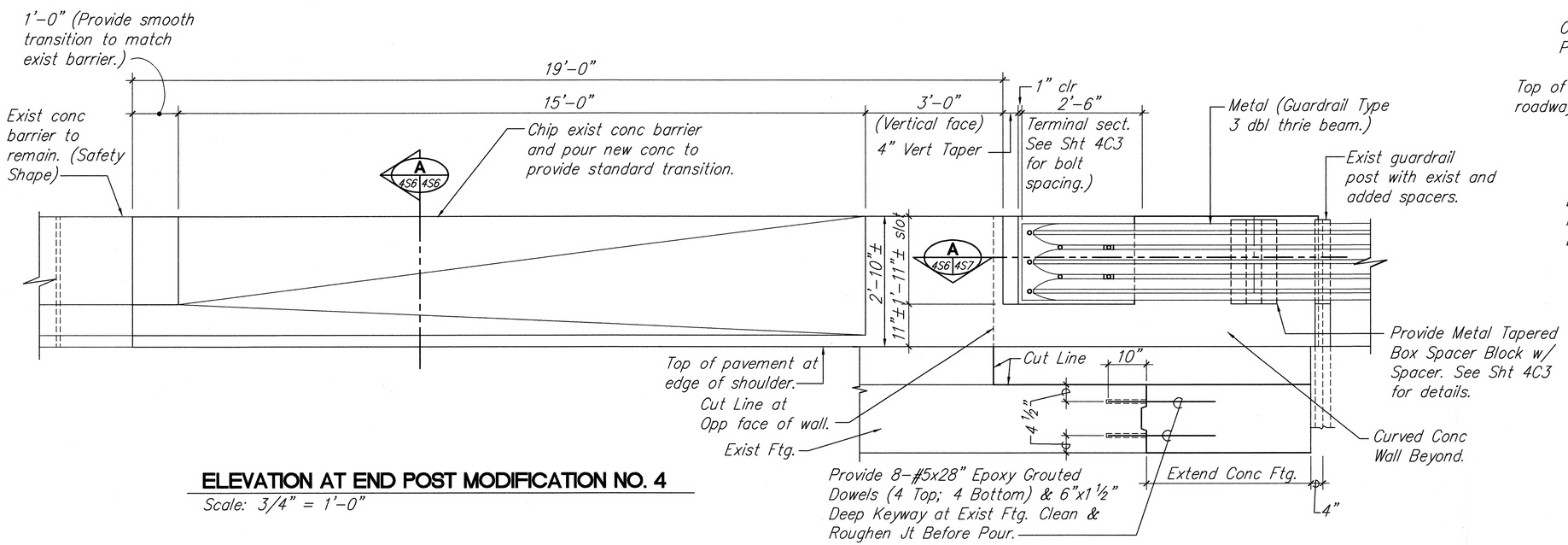

ELEVATION AT END POST MODIFICATION NO. 4

Scale: 3/4" = 1'-0"

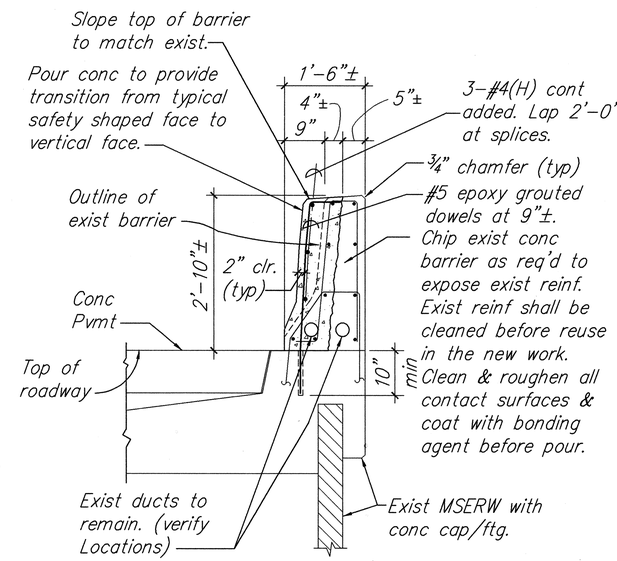

SECTION A (4S6 / 4S6)

Scale: 3/4" = 1'-0"

ORIGINAL PLAN | SURVEY PLOTTED BY | DRAWN BY | TRACED BY | DESIGNED BY | QUANTITIES BY | CHECKED BY | DATE | NOTE BOOK | No.

RANDAL S. FUROMOTO LICENSED PROFESSIONAL ENGINEER No.6130-S HAWAII, U.S.A.

THIS WORK WAS PREPARED BY ME OR UNDER MY SUPERVISION.

Signature

STATE OF HAWAII
DEPARTMENT OF TRANSPORTATION
HIGHWAYS DIVISION

NORTH HALAWA VALLEY
BARRIER AND GUARDRAIL MODIFICATIONS
END POST MODIFICATION NO. 4

H-3 FINISH (UNIT II)
FAIP NO. I-H3-1(75), UNIT II
LEEWARD SECTION

SCALE: AS NOTED DATE: FEB 1997

SHEET No. 4S6 OF 10 SHEETS

FED. ROAD DIST. NO.	STATE	PROJ. NO.	FISCAL YEAR	SHEET NO.	TOTAL SHEETS
HAWAII	HAW.	I-H3-1(75) UNIT II	1997	830	1102

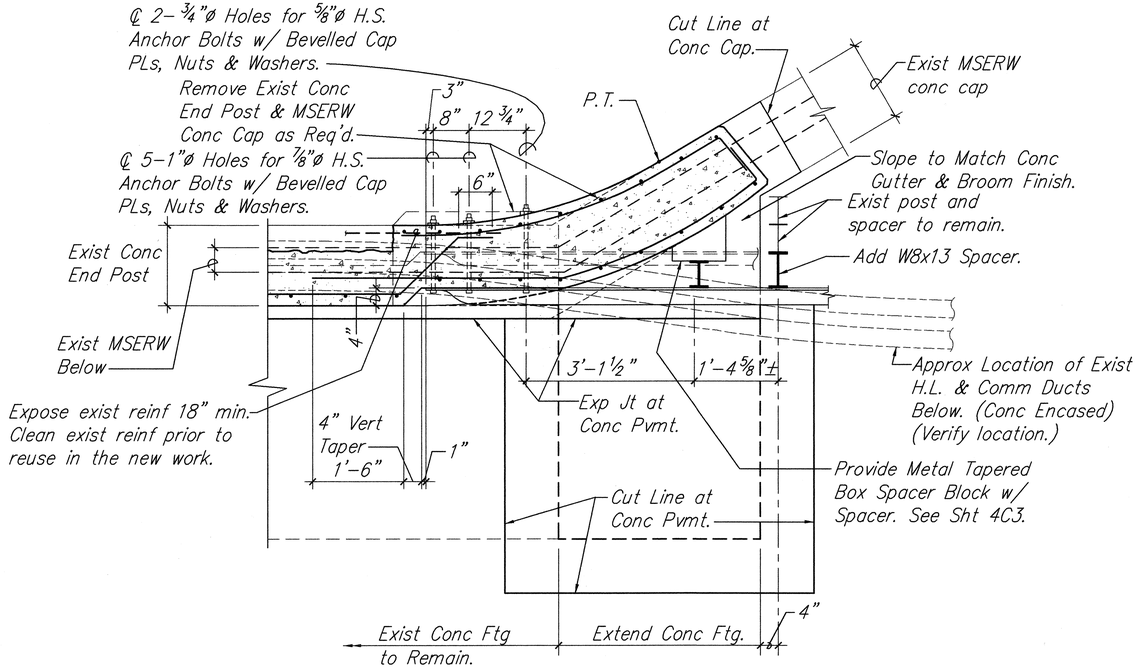

PLAN / SECTION AT END POST MODIFICATION NO. 4 (A, 4S6 | 4S7)

Scale: 3/4" = 1'-0"

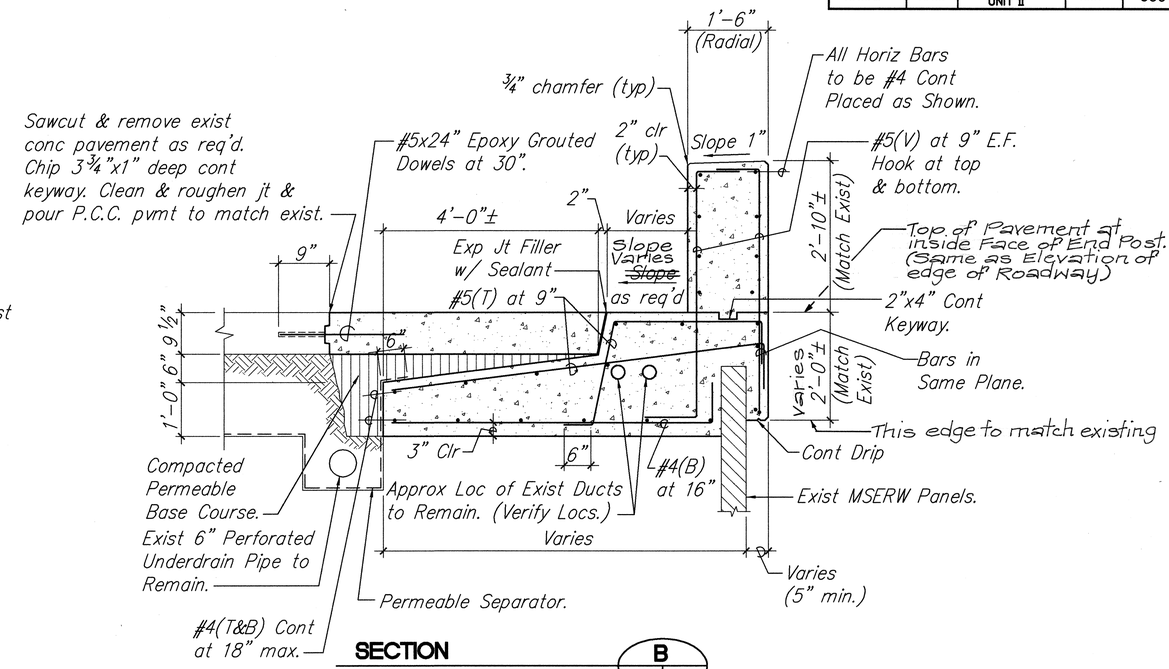

SECTION (B, 4S5 | 4S7; 4S6)

Scale: 3/4" = 1'-0"

ORIGINAL PLAN	SURVEY PLOTTED BY	DATE
	DRAWN BY	
NOTE BOOK	TRACED BY	
	DESIGNED BY	
	QUANTITIES BY	
No.	CHECKED BY	

RANDAL S. FUROMOTO — LICENSED PROFESSIONAL ENGINEER No.6130-S — HAWAII, U.S.A.

THIS WORK WAS PREPARED BY ME OR UNDER MY SUPERVISION.

Signature

STATE OF HAWAII
DEPARTMENT OF TRANSPORTATION
HIGHWAYS DIVISION

NORTH HALAWA VALLEY
BARRIER AND GUARDRAIL MODIFICATIONS
END POST MODIFICATION NO. 4

H-3 FINISH (UNIT II)
FAIP NO. I-H3-1(75), UNIT II
LEEWARD SECTION

SCALE: AS NOTED DATE: FEB 1997

SHEET No. 4S7 OF 10 SHEETS

FED. ROAD DIST. NO.	STATE	FED. AID PROJ. NO.	FISCAL YEAR	SHEET NO.	TOTAL SHEETS
HAWAII	HAW.	I-H3-1(75), UNIT II	1997	831	1102

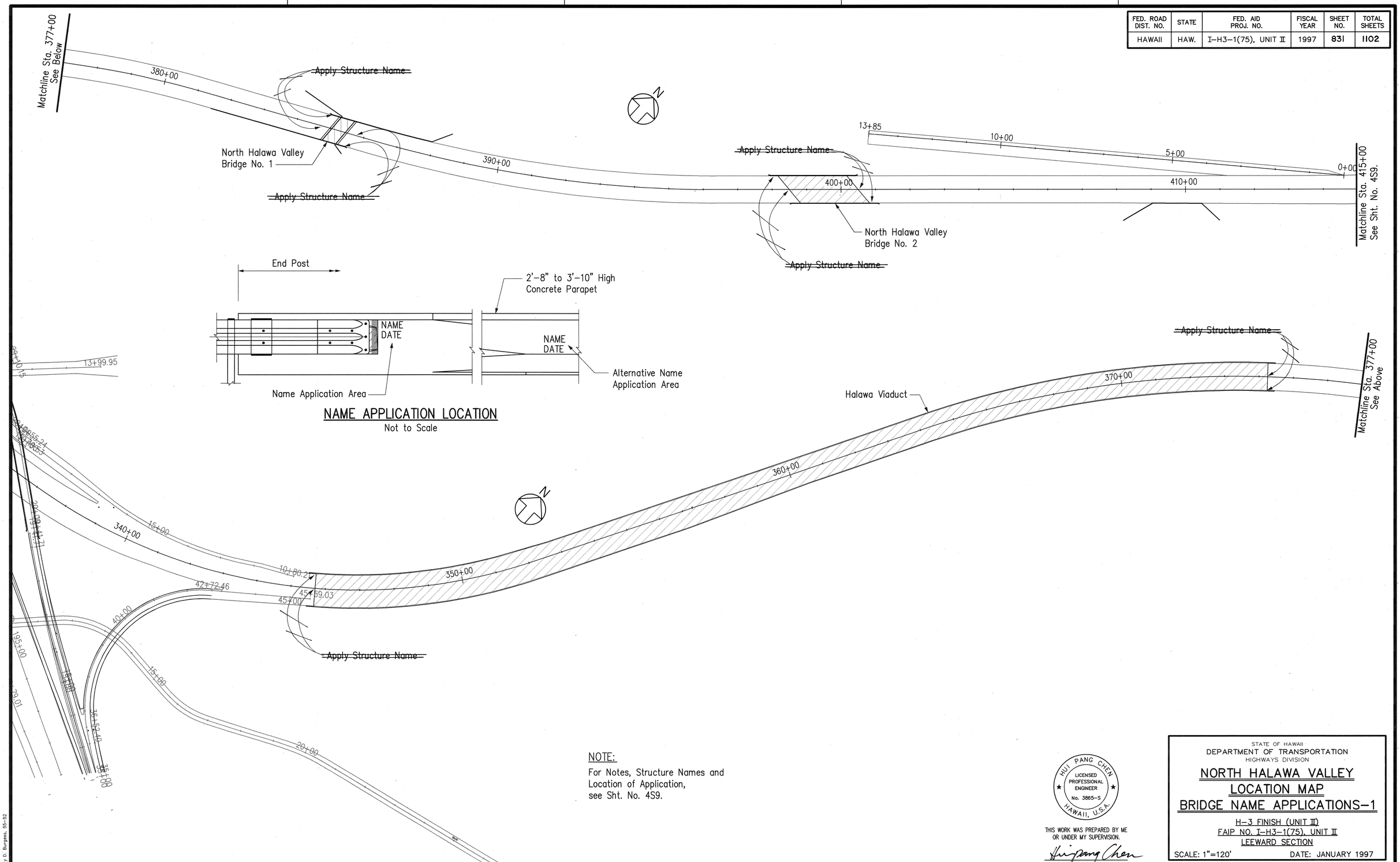

NOTE:

For Notes, Structure Names and Location of Application, see Sht. No. 4S9.

HUI PANG CHEN
LICENSED PROFESSIONAL ENGINEER
No. 3865-S
HAWAII, U.S.A.

THIS WORK WAS PREPARED BY ME OR UNDER MY SUPERVISION.

STATE OF HAWAII
DEPARTMENT OF TRANSPORTATION
HIGHWAYS DIVISION

NORTH HALAWA VALLEY
LOCATION MAP
BRIDGE NAME APPLICATIONS-1

H-3 FINISH (UNIT II)
FAIP NO. I-H3-1(75), UNIT II
LEEWARD SECTION

SCALE: 1"=120' DATE: JANUARY 1997

SHEET NO. 4S8 OF 10 SHEETS

ORIGINAL PLAN
SURVEY PLOTTED BY ____ DATE ____
DRAWN BY ____
TRACED BY ____
NOTE BOOK DESIGNED BY ____
QUANTITIES BY ____
CHECKED BY ____
No. ____

CAD by D. Burgess, 55-52

Last Saved: J:\H3RF\RFU2\STRUCT\NHV-LM3.dwg 02/12/97 at 08:13

FED. ROAD DIST. NO.	STATE	FED. AID PROJ. NO.	FISCAL YEAR	SHEET NO.	TOTAL SHEETS
HAWAII	HAW.	I-H3-1(75), UNIT II	1997	832	1102

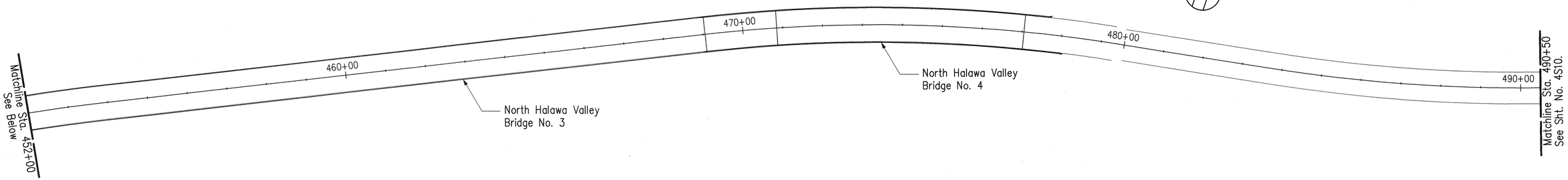

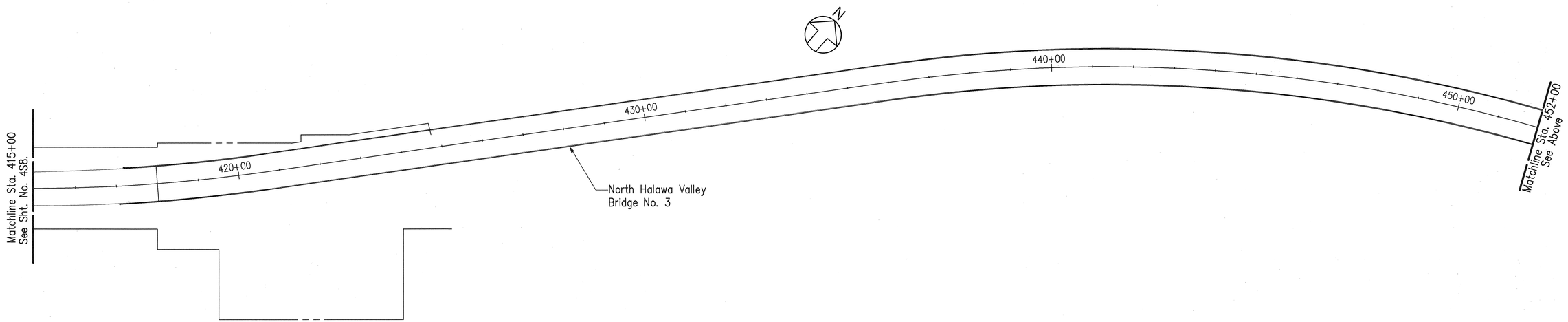

PROJECT NAME	PROJECT NO.	STRUCTURE NAME	BEGIN STA.	END STA.	NO. OF APPLICATIONS
Halawa Quarry Viaduct Makai Section	I-H3-1(54)	HALAWA QUARRY VIADUCT 1992			~~2~~ 0
Halawa Quarry Viaduct Mauka Section	I-H3-1(51)	HALAWA QUARRY VIADUCT 1991			
Unit 1A Bridge No. 1	I-H3-1(59)	NORTH HALAWA VALLEY BRIDGE NO. 1 1995	384+98	385+50	~~2~~ 0 ~~2~~ 0
Unit 1A Bridge No. 2	I-H3-1(59)	NORTH HALAWA VALLEY BRIDGE NO. 2 1995	398+50	400+50	~~2~~ 0 ~~2~~ 0
Unit 2 Bridge No. 5	I-H3-1(69) I-H3-1(70)	NORTH HALAWA VALLEY BRIDGE NO. 5 1996	491+40	509+20	2 2
Unit 1A Bridge No. 6	I-H3-1(69) I-H3-1(70)	NORTH HALAWA VALLEY BRIDGE NO. 6 1996	514+60 IB 514+60 OB	525+10 IB 524+60 OB	2 2
North Halawa Valley Viaduct	I-H3-1(71)	NORTH HALAWA VALLEY VIADUCT 1995	537+70 IB 539+80 OB	599+95 IB 524+60 OB	2 2
Trans-Koolau Tunnel Approach Bridge	I-H3-1(54)	HARANO TUNNEL APPROACH BRIDGE 1995			~~2~~ 1
				Total	~~24~~ 15

NOTES:

1. Structure names are to be engraved on bridge parapet at the locations shown. See Sht. No. 4S8.
2. For style and size of lettering see Standard Plan B-01. The engraved lettering need not conform to V-shaped indentation.
3. The Contractor shall submit the proposed method of applying the names onto the bridge parapet and provide a sample of the lettering for acceptance.

HUI PANG CHEN
LICENSED PROFESSIONAL ENGINEER
No. 3865-S
HAWAII, U.S.A.

THIS WORK WAS PREPARED BY ME OR UNDER MY SUPERVISION.

Huipang Chen

STATE OF HAWAII
DEPARTMENT OF TRANSPORTATION
HIGHWAYS DIVISION

NORTH HALAWA VALLEY
LOCATION MAP
BRIDGE NAME APPLICATIONS-2

H-3 FINISH (UNIT II)
FAIP NO. I-H3-1(75), UNIT II
LEEWARD SECTION

SCALE: 1"=120' DATE: JANUARY 1997

SHEET NO. 4S9 OF 10 SHEETS

832

ORIGINAL PLAN | SURVEY PLOTTED BY ____ DATE ____
DRAWN BY ____
TRACED BY ____
NOTE BOOK | DESIGNED BY ____
QUANTITIES BY ____
CHECKED BY ____
No. ____

CAD by D. Burgess, 55-52

Last Saved: J:\H3RF\RFU2\STRUCT\NHV-LM2.dwg 02/11/97 at 15:45

FED. ROAD DIST. NO.	STATE	FED. AID PROJ. NO.	FISCAL YEAR	SHEET NO.	TOTAL SHEETS
HAWAII	HAW.	I-H3-1(75), UNIT II	1997	833	1102

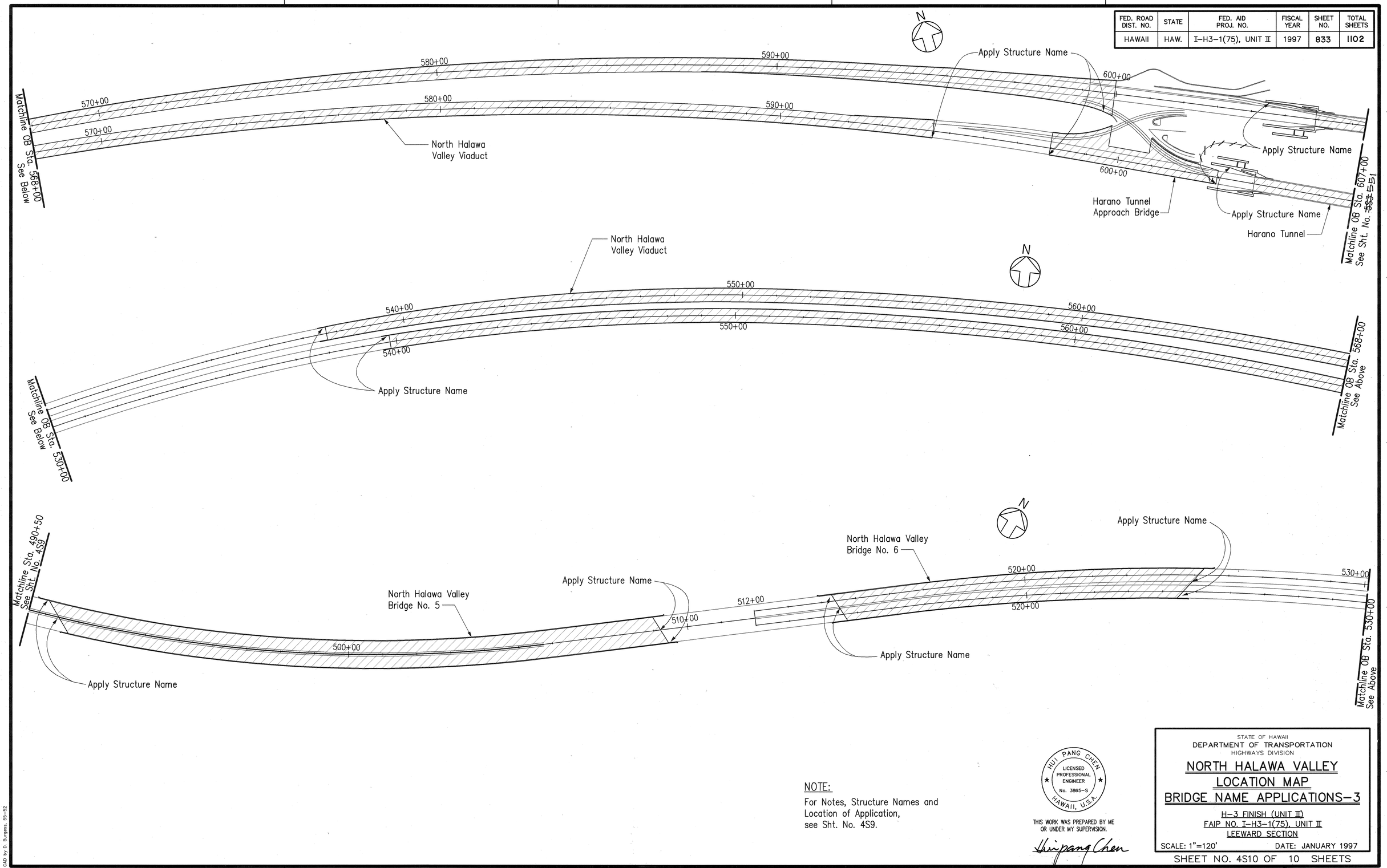

NOTE:

For Notes, Structure Names and Location of Application, see Sht. No. 4S9.

HUI PANG CHEN
LICENSED PROFESSIONAL ENGINEER
No. 3865-S
HAWAII, U.S.A.

THIS WORK WAS PREPARED BY ME OR UNDER MY SUPERVISION.

Huipang Chen

STATE OF HAWAII
DEPARTMENT OF TRANSPORTATION
HIGHWAYS DIVISION

NORTH HALAWA VALLEY LOCATION MAP BRIDGE NAME APPLICATIONS-3

H-3 FINISH (UNIT II)
FAIP NO. I-H3-1(75), UNIT II
LEEWARD SECTION

SCALE: 1"=120' DATE: JANUARY 1997

SHEET NO. 4S10 OF 10 SHEETS

ORIGINAL PLAN
SURVEY PLOTTED BY ____ DATE ____
DRAWN BY ____
TRACED BY ____
NOTE BOOK DESIGNED BY ____
QUANTITIES BY ____
No. ____ CHECKED BY ____

CAD by D. Burgess, 55-52

Last Saved: J:\H3RF\RFU2\STRUCT\NHV-LM1.dwg 02/12/97 at 12:31