FED. ROAD DIST. NO.	STATE	FED. AID PROJ. NO.	FISCAL YEAR	SHEET NO.	TOTAL SHEETS
HAWAII	HAW.	I-H3-1(75), UNIT II	1997	845	1102

DESTINATION SIGN NOTES:

1. Sign details shall conform to the latest editions and amendments of the following FHWA publications: "Manual on Uniform Traffic Control Devices for Streets and Highways", "Standard Highway Signs" and "Standard Alphabets for Highway Signs."
2. Border widths and radii shall conform to Standard TE-14, except as noted.
3. For additional information of Changeable Message Signs (CMS) and Variable Message Signs (VMS), see System Plans.
4. Existing signs shown on plans are known by the Engineer through his search of existing plans and field inspections. The Contractor shall verify presence of existing signs. They shall be removed and stockpiled at DOT's Pearl City baseyard as directed by the Engineer. Removal of ground mounted destination signs shall also include the removal of post and foundation to a minimum height of 1-foot below the ground. Post and foundations shall become the property of the Contractor. Payment shall be considered incidental to various contract items.
5. The Contractor shall backfill all holes, depressions and pits left by the removal of the existing signs with embankment material and grass all areas exposed in accordance with specifications section 618-grassed surfaces. Payment shall be considered incidental to various contract items.
6. Ground Mounted Destination sign's mounting and footing shall conform to Standard Plans TE-23, TE-24, TE-26 & TE-27 except as noted on plans.
7. Payment for Type I barricade will be paid under Section 645-Traffic Control.
8. For Traffic Control Plans not shown, see Special Provision Section 621.
9. Payment for temporary relocation of signs to facilitate construction will be considered incidental to various contract items. Contractor shall obtain Engineer's approval for proposed temporary supports.
10. For gore area signs 'D', sign mounting and footing shall conform to Standard Plan TE-2.
11. See Sht. No. 6P19 for Exit Panel Details. Shop drawings for the attachment of Exit Number Panels to existing and new Destination Signs ('E') and Changeable Message Signs (CMS) shall be submitted by the Contractor to the Engineer for approval.
12. See Sht. No. 6P20 for Arrow A and Arrow C dimensions.
13. A minimum clearance of 17' must be maintained between the high point of the roadway and the bottom of the lighting fixture frame.
14. The Contractor shall trim vegetation to provide motorists a clear view of each sign. Payment for trimming of vegetation shall be considered incidental to various contract items.
15. The Contractor shall verify the span length prior to manufacturing all sign structures.

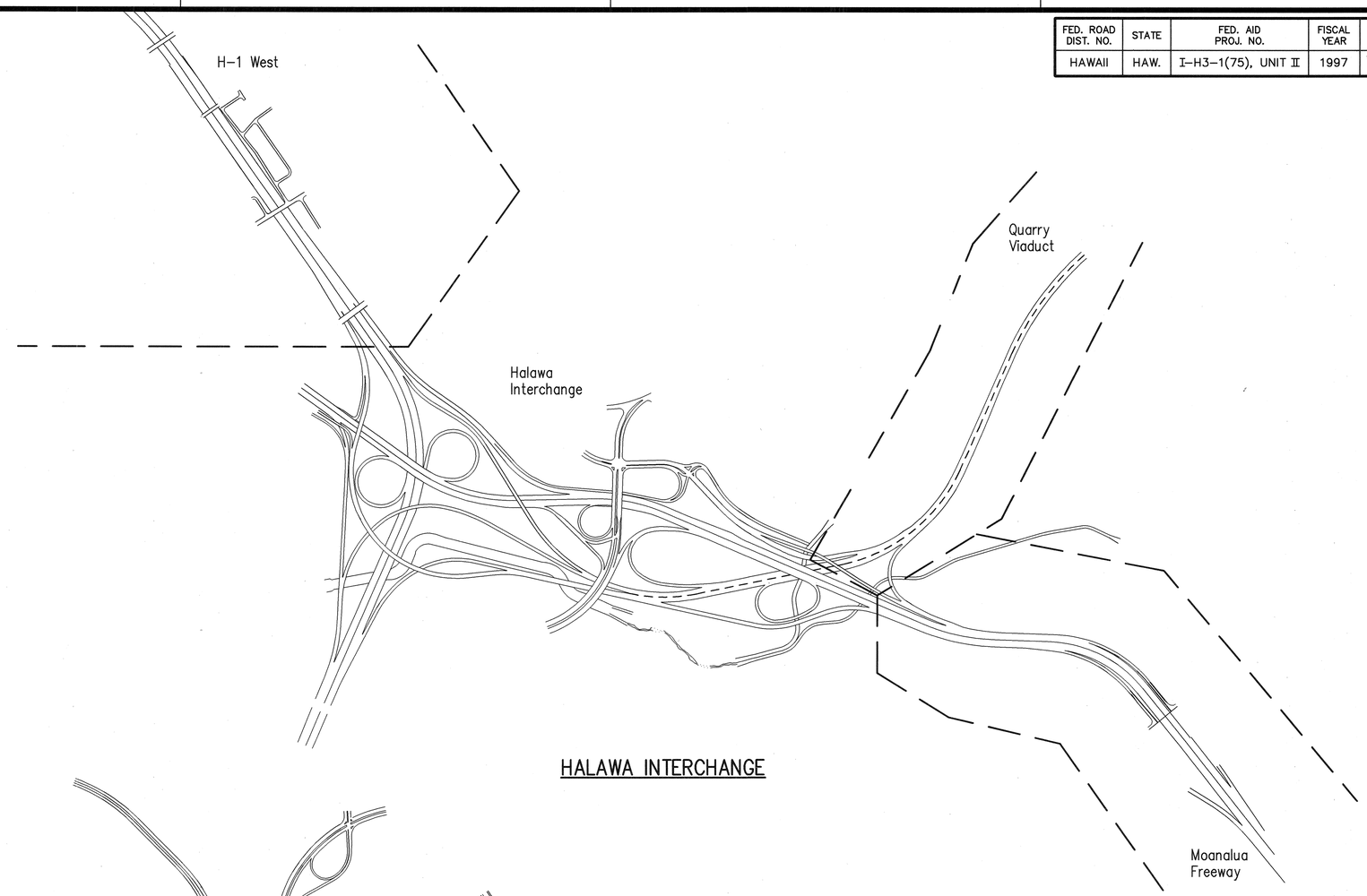

HALAWA INTERCHANGE

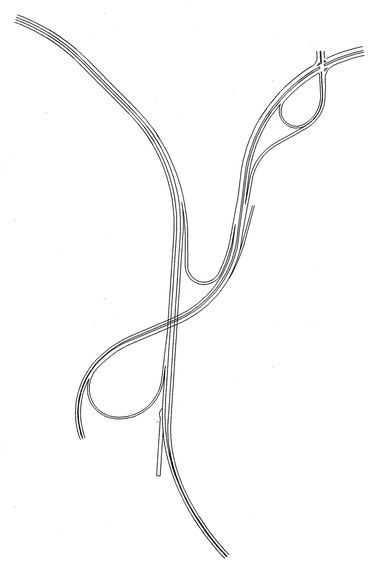

KANEOHE INTERCHANGE

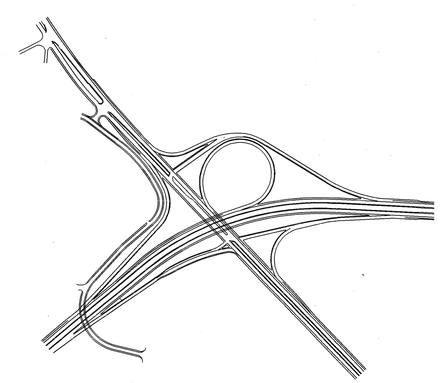

HALEKOU INTERCHANGE

RANDALL M. URASAKI
LICENSED PROFESSIONAL ENGINEER
No. 7269-C
HAWAII, U.S.A.

THIS WORK WAS PREPARED BY ME OR UNDER MY SUPERVISION

STATE OF HAWAII
DEPARTMENT OF TRANSPORTATION
HIGHWAYS DIVISION

DESTINATION SIGNS NOTES & LOCATION MAP

H-3 FINISH (UNIT II)
FAIP NO. I-H3-1(75), UNIT II
LEEWARD SECTION

SCALE: NONE DATE: JANUARY 1997

SHEET NO. 6G1 OF 6 SHEETS

ORIGINAL PLAN | SURVEY PLOTTED BY ___ DATE | DRAWN BY | TRACED BY | DESIGNED BY | QUANTITIES BY | CHECKED BY | NOTE BOOK No. ___

CAD by J. Mimura, 55-52

Last Saved: J:\H3RF\RFU2\SIGN\SS-NOTES.dwg 02/24/97 at 06:57

FED. ROAD DIST. NO.	STATE	FED. AID PROJ. NO.	FISCAL YEAR	SHEET NO.	TOTAL SHEETS
HAWAII	HAW.	I-H3-1(75), UNIT II	1997	846	1102

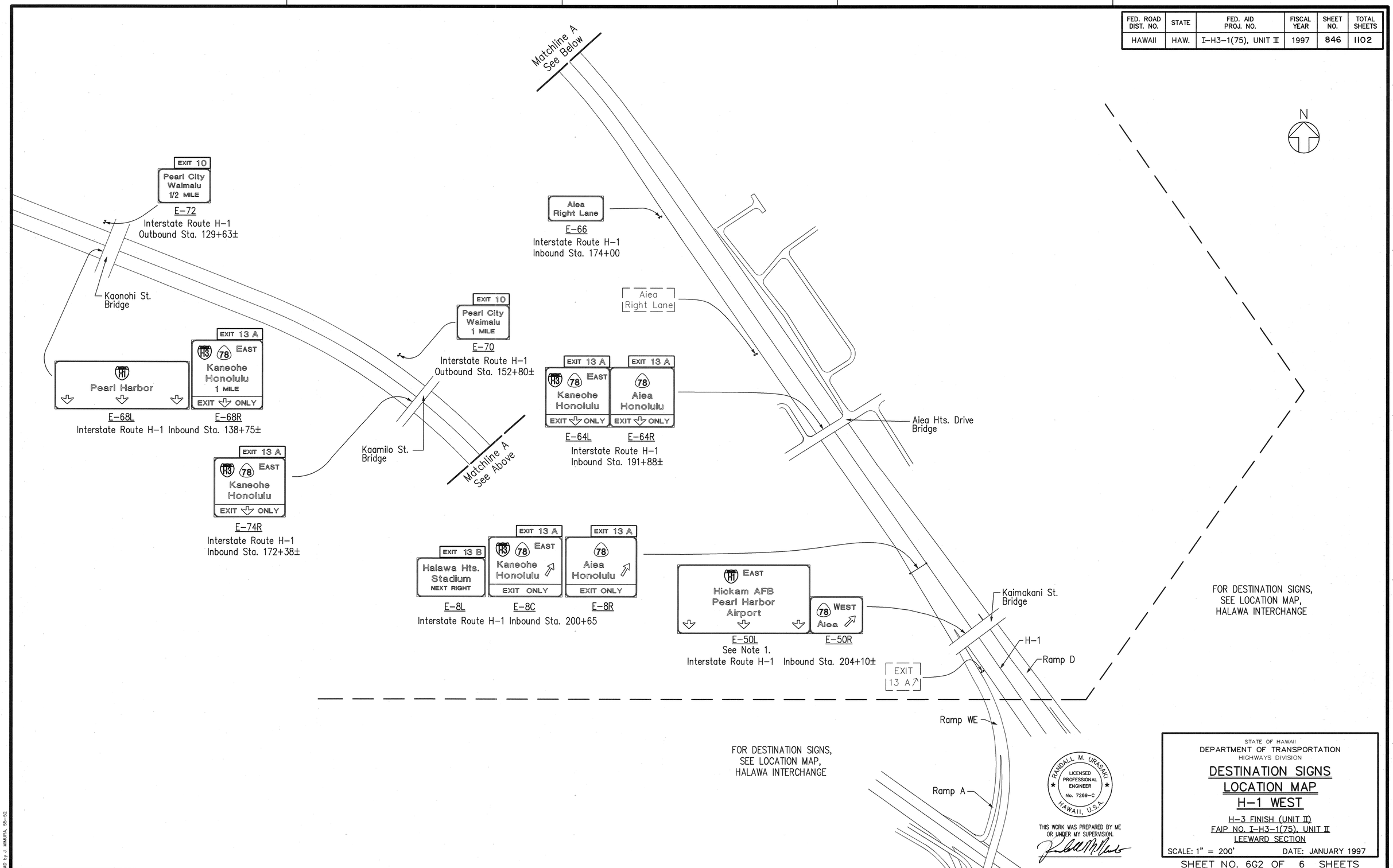

RANDALL M. URASAKI LICENSED PROFESSIONAL ENGINEER No. 7269-C HAWAII, U.S.A.

THIS WORK WAS PREPARED BY ME OR UNDER MY SUPERVISION.

STATE OF HAWAII
DEPARTMENT OF TRANSPORTATION
HIGHWAYS DIVISION

DESTINATION SIGNS LOCATION MAP H-1 WEST

H-3 FINISH (UNIT II)
FAIP NO. I-H3-1(75), UNIT II
LEEWARD SECTION

SCALE: 1" = 200' DATE: JANUARY 1997

SHEET NO. 6G2 OF 6 SHEETS

ORIGINAL PLAN | SURVEY PLOTTED BY ___ DATE ___ | DRAWN BY ___ | TRACED BY ___ | DESIGNED BY ___ | QUANTITIES BY ___ | CHECKED BY ___ | NOTE BOOK ___ No. ___

CAD by J. MINURA, 55-52

Last Saved: J:\H3RF\RFU2\SIGN\H3RF-H1.dwg 02/24/97 at 07:00

FED. ROAD DIST. NO.	STATE	FED. AID PROJ. NO.	FISCAL YEAR	SHEET NO.	TOTAL SHEETS
HAWAII	HAW.	I-H3-1(75), UNIT II	1997	847	1102

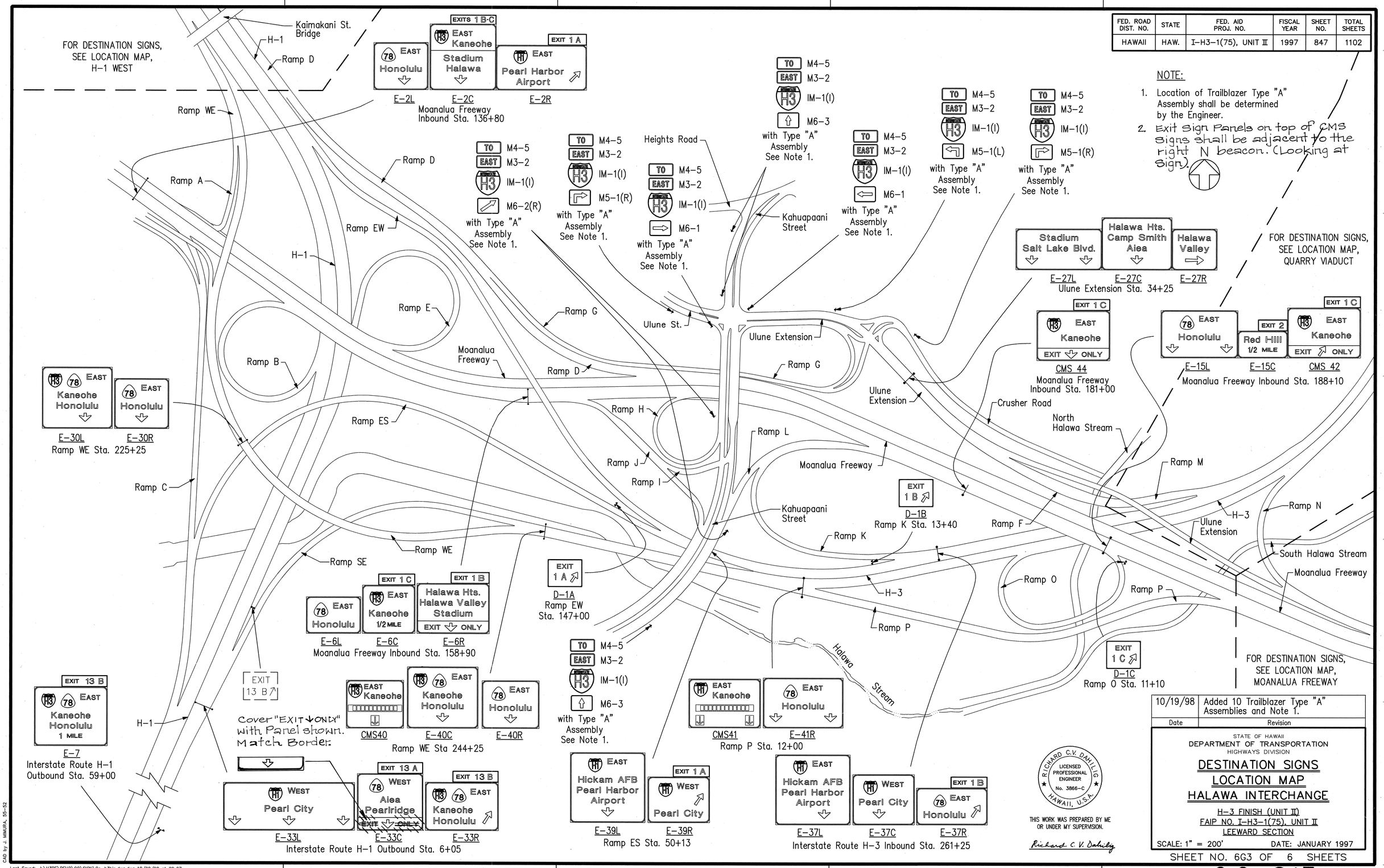

NOTE:

1. Location of Trailblazer Type "A" Assembly shall be determined by the Engineer.
2. Exit Sign Panels on top of CMS Signs shall be adjacent to the right N beacon. (Looking at Sign).

Date	Revision
10/19/98	Added 10 Trailblazer Type "A" Assemblies and Note 1.

STATE OF HAWAII
DEPARTMENT OF TRANSPORTATION
HIGHWAYS DIVISION

DESTINATION SIGNS LOCATION MAP HALAWA INTERCHANGE

H-3 FINISH (UNIT II)
FAIP NO. I-H3-1(75), UNIT II
LEEWARD SECTION

SCALE: 1" = 200' DATE: JANUARY 1997

RICHARD C.V. DAHLIG LICENSED PROFESSIONAL ENGINEER No. 3866-C HAWAII, U.S.A.

THIS WORK WAS PREPARED BY ME OR UNDER MY SUPERVISION.

Richard C. V. Dahlig

SHEET NO. 6G3 OF 6 SHEETS

C.O. 847

ORIGINAL PLAN | SURVEY PLOTTED BY | DRAWN BY | TRACED BY | DESIGNED BY | QUANTITIES BY | CHECKED BY | DATE
NOTE BOOK No.

CAD by J. IMURA, 55-52

Last Saved: J:\H3RF\RFU2\CO\SIGN\Co-h3hic.dwg.dwg 10/20/98 at 09:27

FED. ROAD DIST. NO.	STATE	FED. AID PROJ. NO.	FISCAL YEAR	SHEET NO.	TOTAL SHEETS
HAWAII	HAW.	I-H3-1(75), UNIT II	1997	C.O. 848	1102

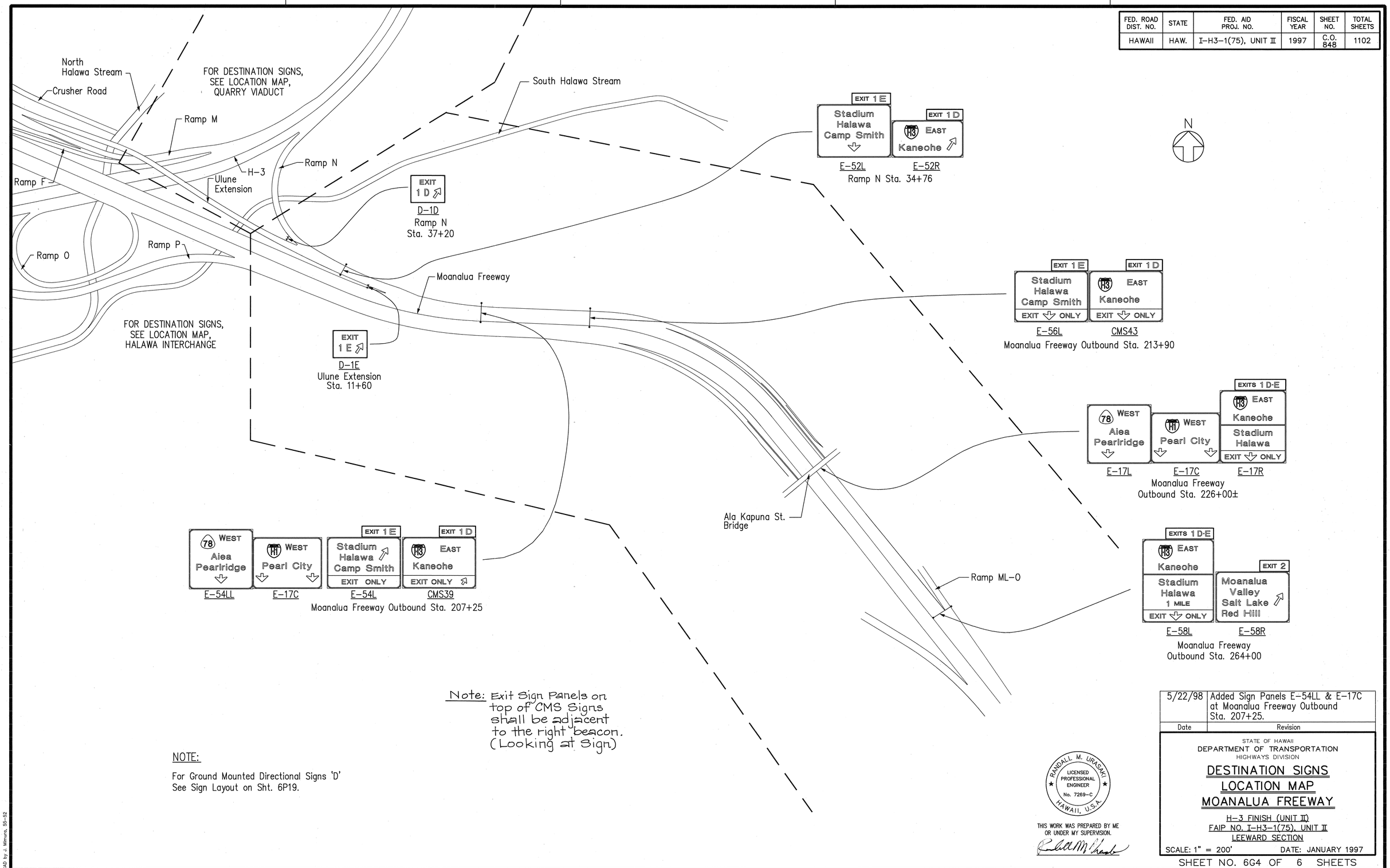

Note: Exit Sign Panels on top of CMS Signs shall be adjacent to the right beacon. (Looking at Sign)

NOTE:

For Ground Mounted Directional Signs 'D' See Sign Layout on Sht. 6P19.

Date	Revision
5/22/98	Added Sign Panels E-54LL & E-17C at Moanalua Freeway Outbound Sta. 207+25.

RANDALL M. URASAKI
LICENSED PROFESSIONAL ENGINEER
No. 7269-C
HAWAII, U.S.A.

THIS WORK WAS PREPARED BY ME OR UNDER MY SUPERVISION.

STATE OF HAWAII
DEPARTMENT OF TRANSPORTATION
HIGHWAYS DIVISION

DESTINATION SIGNS LOCATION MAP MOANALUA FREEWAY

H-3 FINISH (UNIT II)
FAIP NO. I-H3-1(75), UNIT II
LEEWARD SECTION

SCALE: 1" = 200' DATE: JANUARY 1997

SHEET NO. 6G4 OF 6 SHEETS

C.O. 848

ORIGINAL PLAN
SURVEY PLOTTED BY ____ DATE ____
DRAWN BY ____
NOTE BOOK TRACED BY ____
DESIGNED BY ____
QUANTITIES BY ____
No. ____ CHECKED BY ____

CAD by A. Mimura, 55-52

Last Saved: J:\H3RF\RFU2\CO\SIGN\Co-h3mf.dwg.dwg 05/29/98 at 13:46

FED. ROAD DIST. NO.	STATE	FED. AID PROJ. NO.	FISCAL YEAR	SHEET NO.	TOTAL SHEETS
HAWAII	HAW.	I-H3-1(75), UNIT II	1997	849	1102

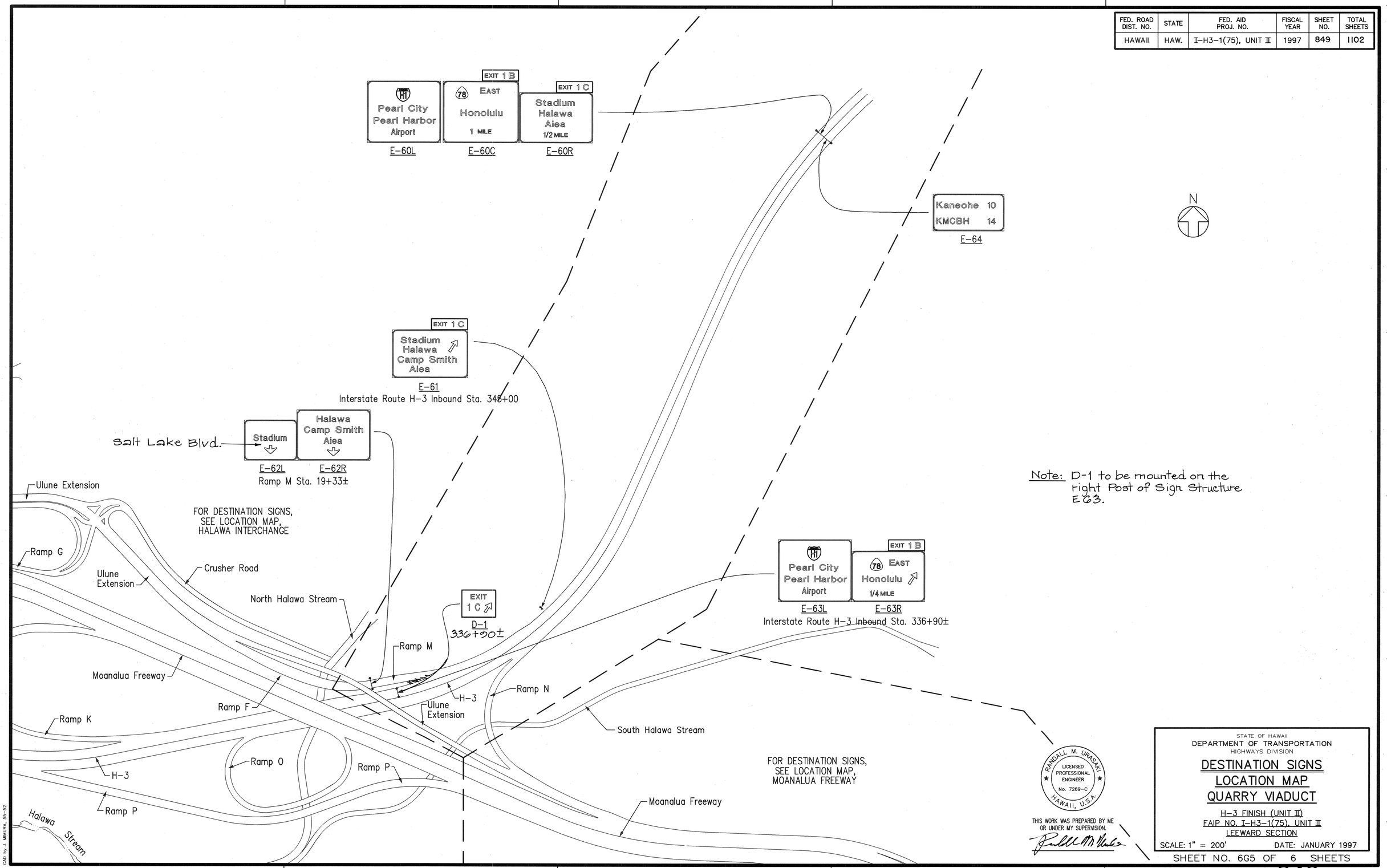

Note: D-1 to be mounted on the right Post of Sign Structure E63.

ORIGINAL PLAN
SURVEY PLOTTED BY
DRAWN BY
TRACED BY
DESIGNED BY
QUANTITIES BY
CHECKED BY
DATE
NOTE BOOK No.

CAD by J. MINURA, 55-52

Last Saved: J:\H3RF\RFU2\SIGN\H3RF-QV.dwg 02/24/97 at 07:09

RANDALL M. URASAKI
LICENSED PROFESSIONAL ENGINEER
No. 7269-C
HAWAII, U.S.A.

THIS WORK WAS PREPARED BY ME OR UNDER MY SUPERVISION.

STATE OF HAWAII
DEPARTMENT OF TRANSPORTATION
HIGHWAYS DIVISION

DESTINATION SIGNS LOCATION MAP QUARRY VIADUCT

H-3 FINISH (UNIT II)
FAIP NO. I-H3-1(75), UNIT II
LEEWARD SECTION

SCALE: 1" = 200' DATE: JANUARY 1997

SHEET NO. 6G5 OF 6 SHEETS

FED. ROAD DIST. NO.	STATE	FED. AID PROJ. NO.	FISCAL YEAR	SHEET NO.	TOTAL SHEETS
HAWAII	HAW.	I-H3-1(75), UNIT II	1997	850	1102

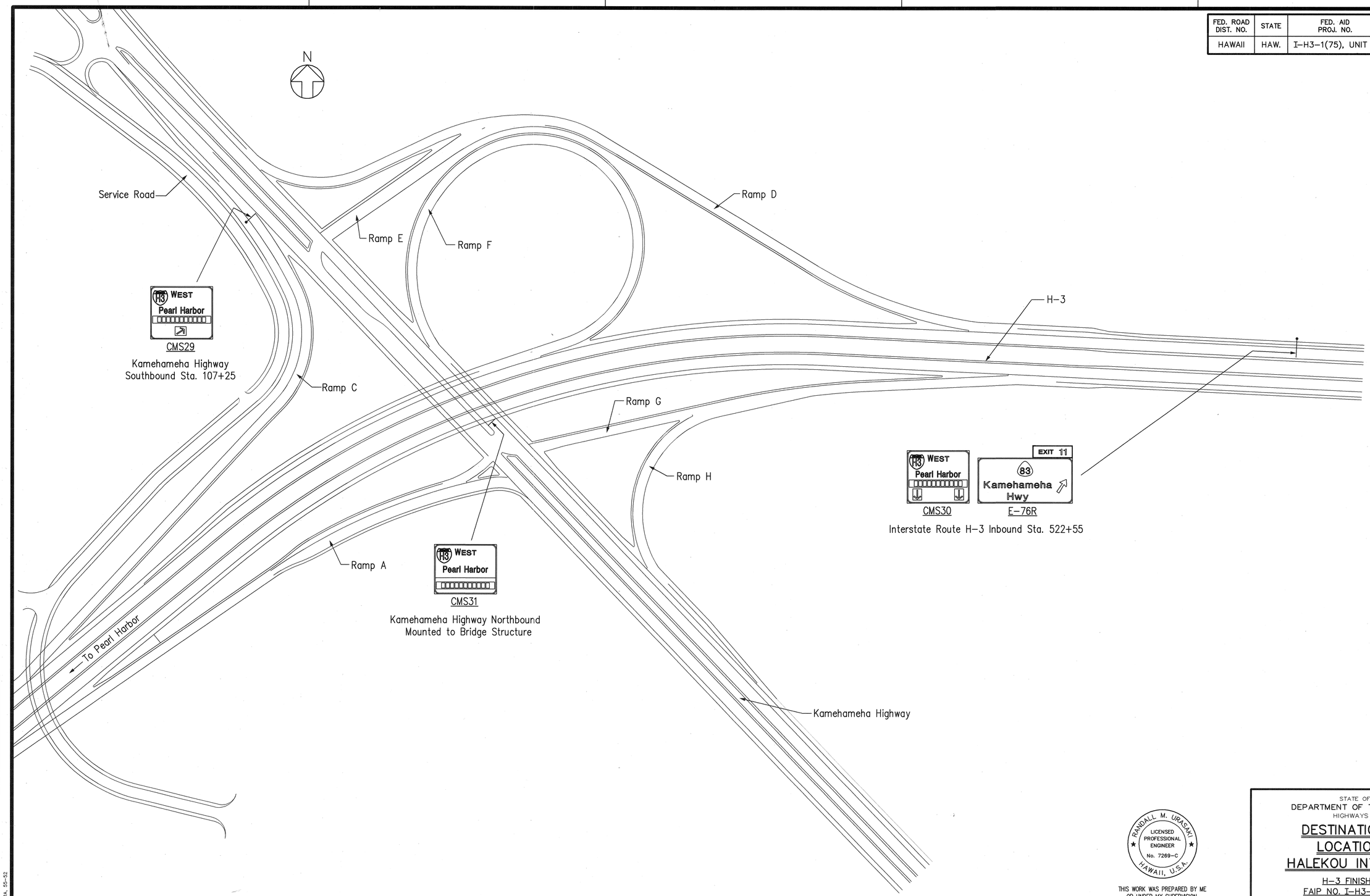

ORIGINAL PLAN	SURVEY PLOTTED BY	DATE
	DRAWN BY	
NOTE BOOK	TRACED BY	
	DESIGNED BY	
No.	QUANTITIES BY	
	CHECKED BY	

CAD by J. MAMURA, 55-52

Last Saved: J:\H3RF\RFU2\SIGN\HALEKOU.dwg 02/24/97 at 07:12

RANDALL M. URASAKI
LICENSED PROFESSIONAL ENGINEER
No. 7269-C
HAWAII, U.S.A.

THIS WORK WAS PREPARED BY ME OR UNDER MY SUPERVISION.

STATE OF HAWAII
DEPARTMENT OF TRANSPORTATION
HIGHWAYS DIVISION

DESTINATION SIGNS LOCATION MAP HALEKOU INTERCHANGE

H-3 FINISH (UNIT II)
FAIP NO. I-H3-1(75), UNIT II
LEEWARD SECTION

SCALE: 1" = 100' DATE: JANUARY 1997

SHEET NO. 6G6 OF 6 SHEETS

FED. ROAD DIST. NO.	STATE	FED. AID PROJ. NO.	FISCAL YEAR	SHEET NO.	TOTAL SHEETS
HAWAII	HAW.	I-H3-1(75), UNIT II	1997	851	1102

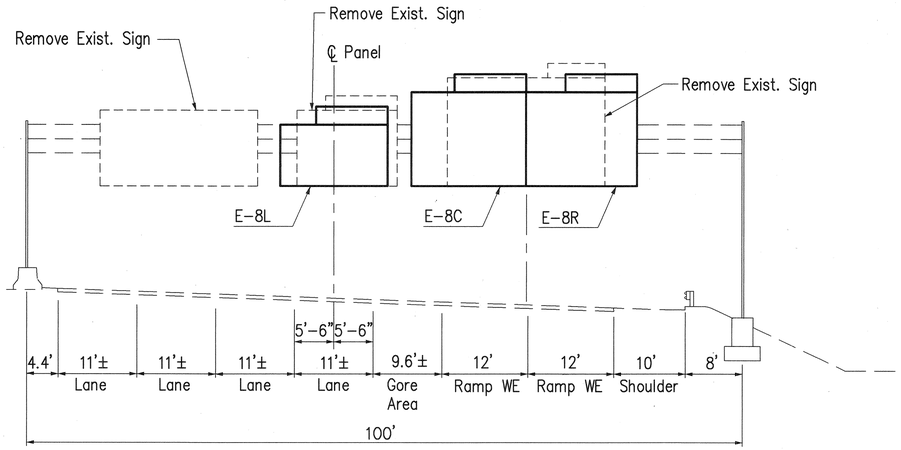

SIGN LAYOUT E-8L, E-8C & E-8R

Interstate Route H-1 Inbound Sta. 200+65

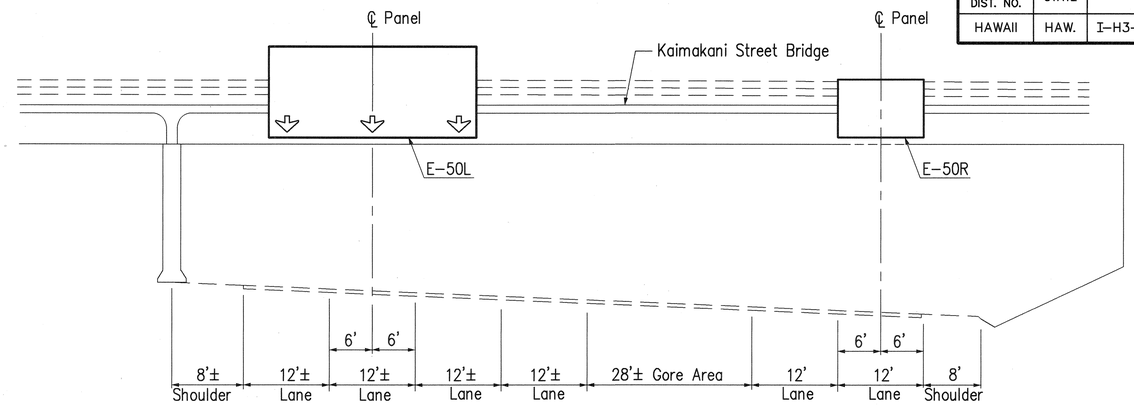

SIGN LAYOUT E-50L & E-50R

Interstate Route H-1 Inbound Sta. 204+10±

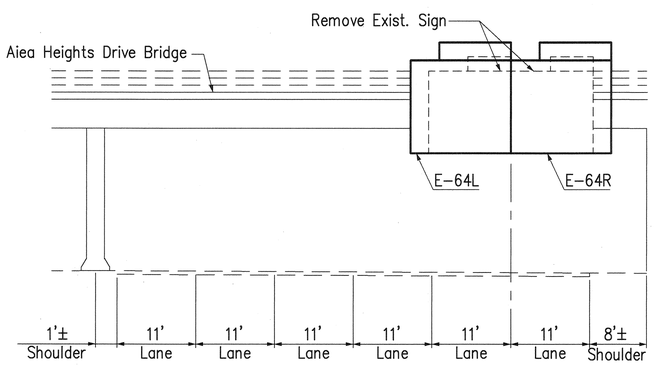

SIGN LAYOUT E-64L & E-64R

Interstate Route H-1 Inbound Sta. 191+88±

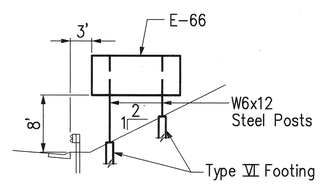

SIGN LAYOUT E-66

Interstate Route H-1 Inbound Sta. 174+00

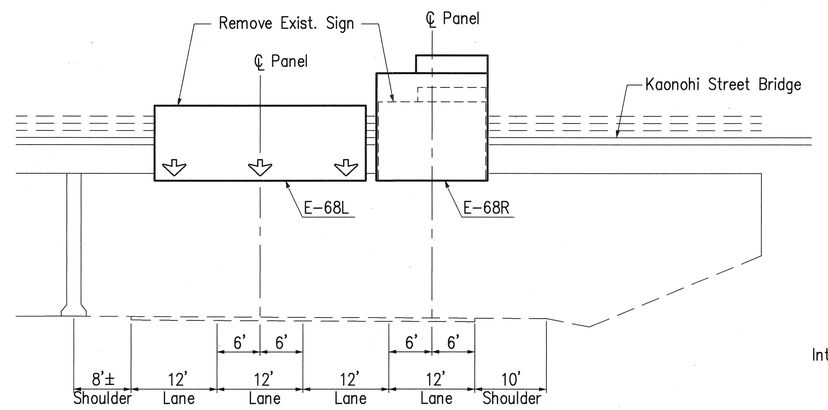

SIGN LAYOUT E-68L & E-68R

Interstate Route H-1 Inbound Sta. 138+75±

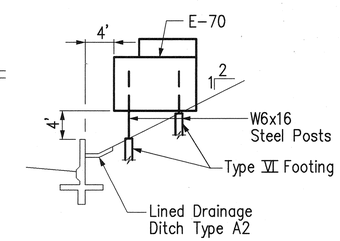

SIGN LAYOUT E-70

Interstate Route H-1 Outbound Sta. 152+80

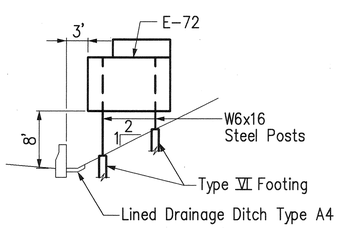

SIGN LAYOUT E-72

Interstate Route H-1 Outbound Sta. 129+63±

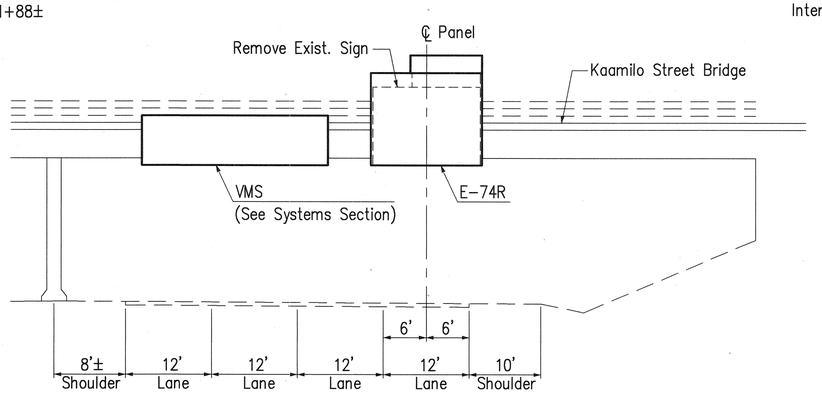

SIGN LAYOUT E-74R

Interstate Route H-1 Inbound Sta. 172+38±

Notes For Ground Mounted 'E' signs:

1. For Dimensions Not Shown, See Standard Plans TE-23, TE-26, & TE-27.
2. For Type VI Footing, See Standard Plan TE-23.

RANDALL M. URASAKI
LICENSED PROFESSIONAL ENGINEER
No. 7269-C
HAWAII, U.S.A.

THIS WORK WAS PREPARED BY ME OR UNDER MY SUPERVISION

STATE OF HAWAII
DEPARTMENT OF TRANSPORTATION
HIGHWAYS DIVISION

DESTINATION SIGNS
SIGN LAYOUTS
H-1 WEST

H-3 FINISH (UNIT II)
FAIP NO. I-H3-1(75), UNIT II
LEEWARD SECTION

SCALE: 1" = 10' DATE: JANUARY 1997

SHEET NO. 6P1 OF 20 SHEETS

851

ORIGINAL PLAN | SURVEY PLOTTED BY | DRAWN BY | TRACED BY | DESIGNED BY | QUANTITIES BY | CHECKED BY | DATE
NOTE BOOK No.

CAD by J. Mimura, 05-52

Last Saved: J:\H3RF\RFU2\SIGN\SLO-H1W1.dwg 02/24/97 at 07:31

FED. ROAD DIST. NO.	STATE	FED. AID PROJ. NO.	FISCAL YEAR	SHEET NO.	TOTAL SHEETS
HAWAII	HAW.	I-H3-1(75), UNIT II	1997	852	1102

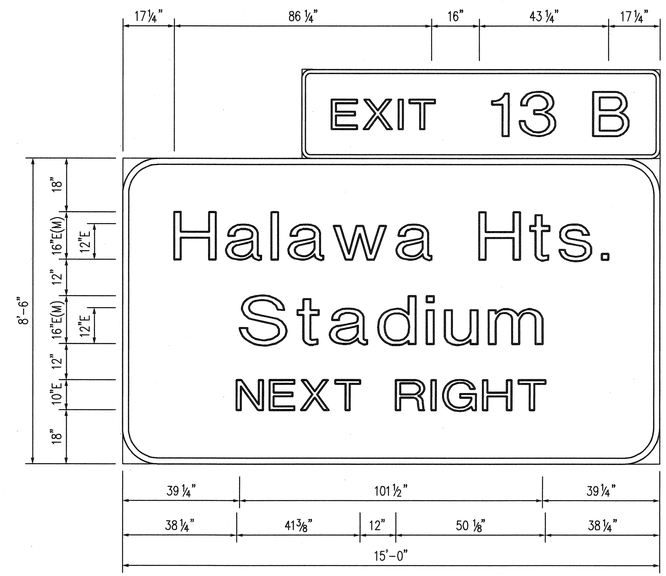

E-8L

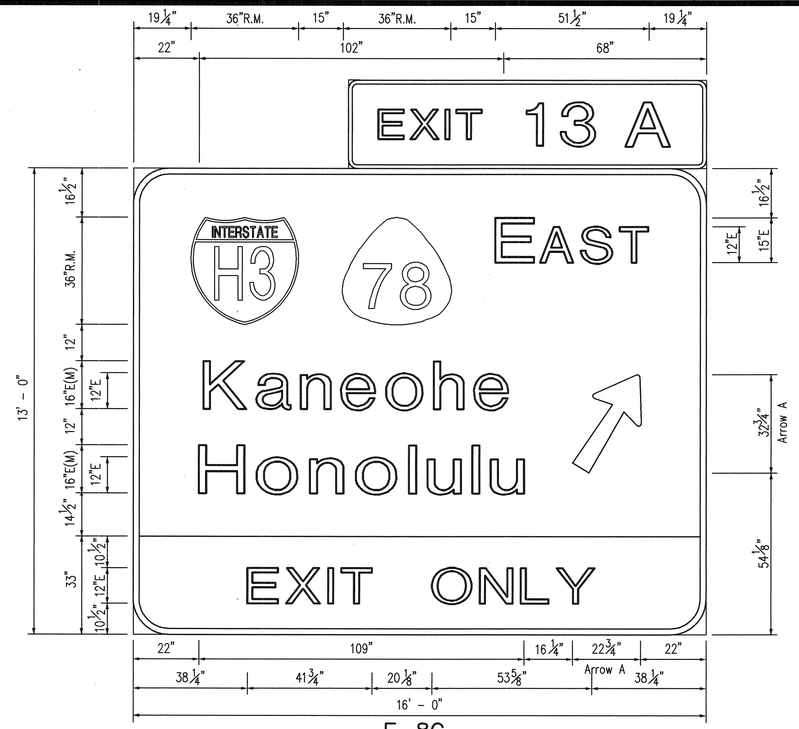

E-8C

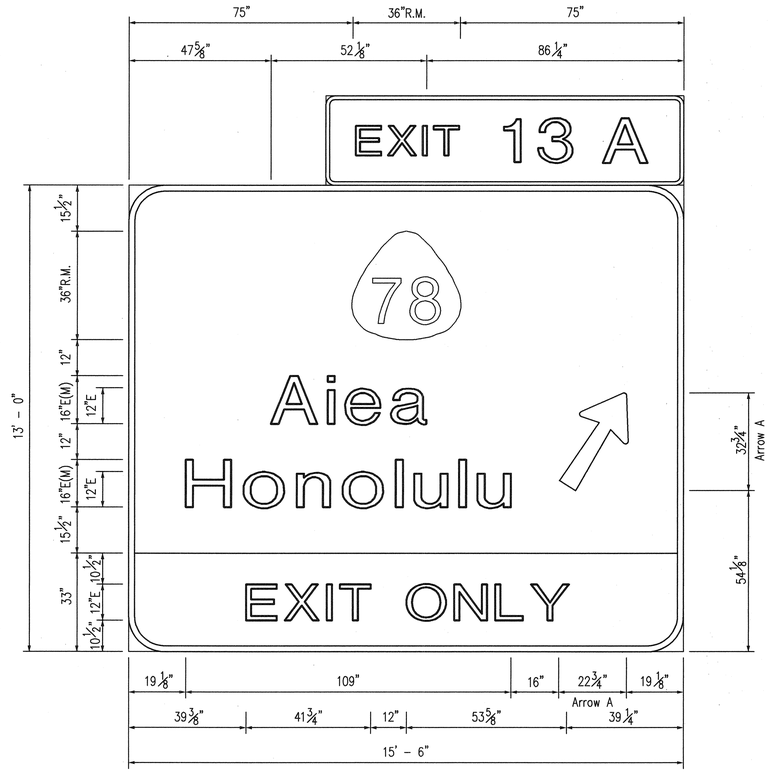

E-8R

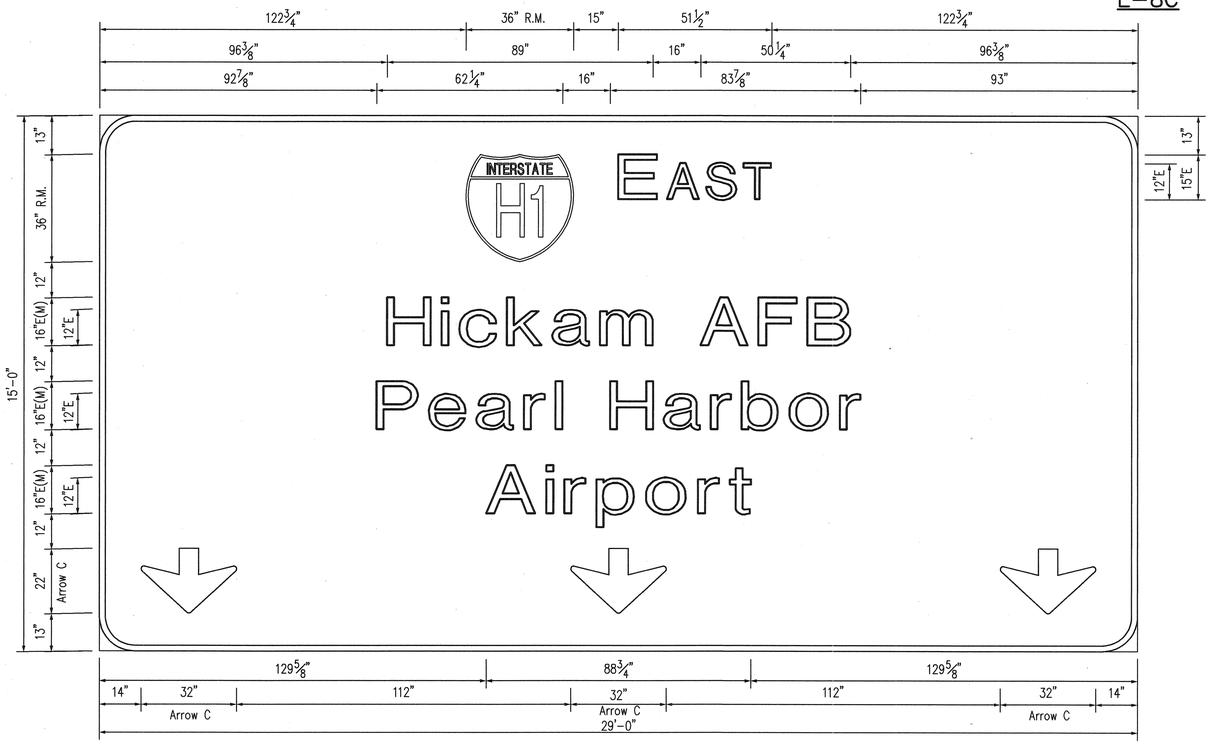

E-50L

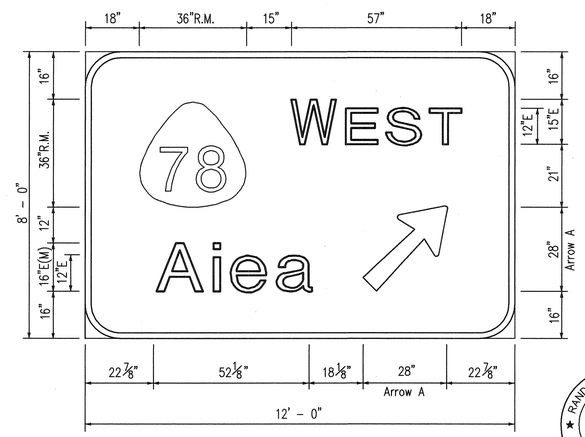

E-50R

RANDALL M. URASAKI
LICENSED PROFESSIONAL ENGINEER
No. 7269-C
HAWAII, U.S.A.

THIS WORK WAS PREPARED BY ME OR UNDER MY SUPERVISION.

STATE OF HAWAII
DEPARTMENT OF TRANSPORTATION
HIGHWAYS DIVISION

DESTINATION SIGNS
SIGN DETAILS
H-1 WEST

H-3 FINISH (UNIT II)
FAIP NO. I-H3-1(75), UNIT II
LEEWARD SECTION

SCALE: 1/2" = 1'-0" DATE: JANUARY 1997

SHEET NO. 6P2 OF 20 SHEETS

ORIGINAL PLAN
SURVEY PLOTTED BY ____ DATE ____
DRAWN BY " " "
TRACED BY " " "
NOTE BOOK DESIGNED BY " " "
QUANTITIES BY " " "
No. ____ CHECKED BY " " "

CAD by J. Mimura, 55-52

Last Saved: J:\H3RF\RFU2\SIGN\SD-H1W-3.dwg 02/24/97 at 07:32

FED. ROAD DIST. NO.	STATE	FED. AID PROJ. NO.	FISCAL YEAR	SHEET NO.	TOTAL SHEETS
HAWAII	HAW.	I-H3-1(75), UNIT II	1997	853	1102

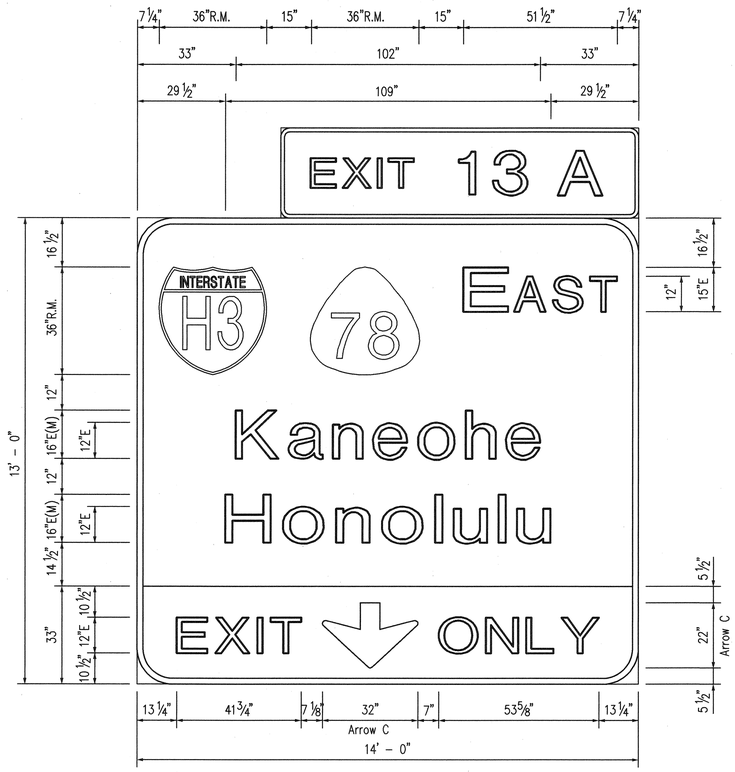

E-64L

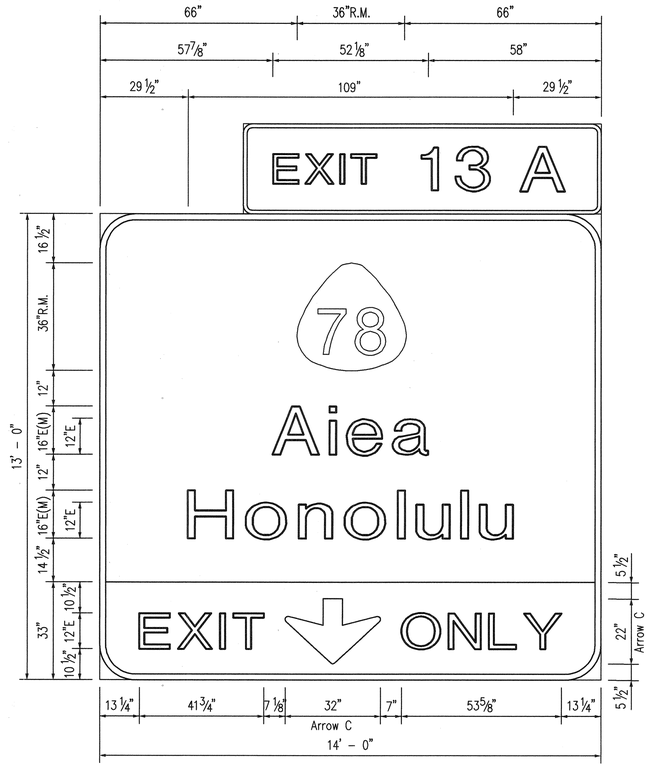

E-64R

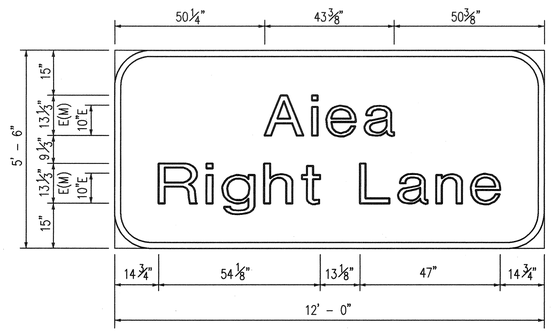

E-66

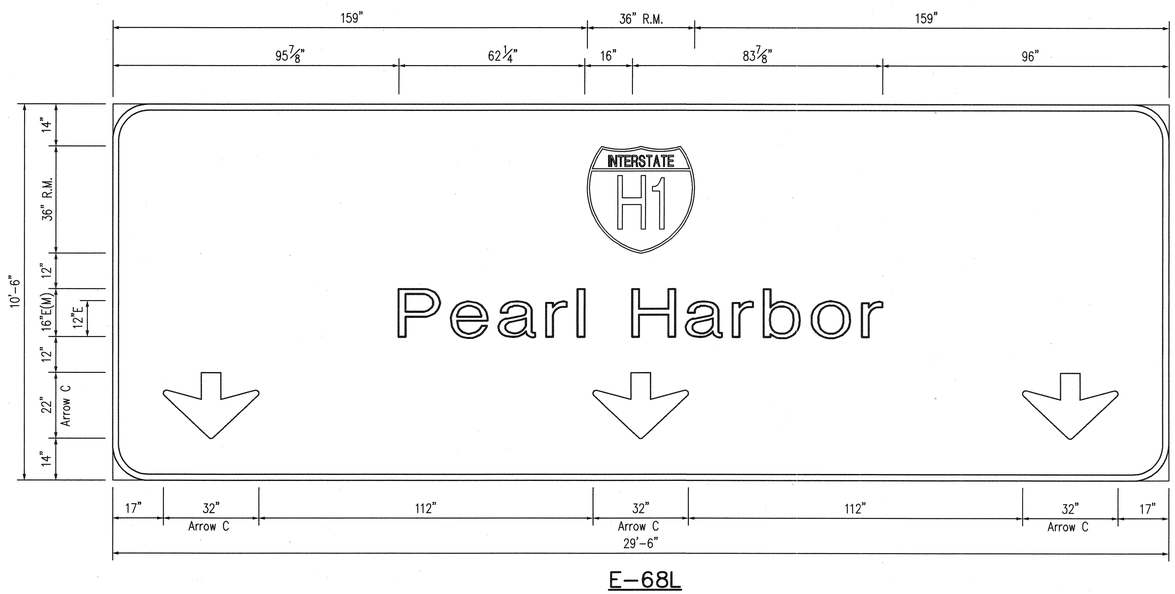

E-68L

ORIGINAL PLAN	
SURVEY PLOTTED BY	DATE
DRAWN BY	" "
TRACED BY	" "
DESIGNED BY	" "
QUANTITIES BY	" "
CHECKED BY	" "
NOTE BOOK	
No.	

CAD by D. Burgess, 55-52

Last Saved: J:\H3RF\RFU2\SIGN\SD-H1W-1.dwg 01/03/97 at 09:31

RANDALL M. URASAKI
LICENSED PROFESSIONAL ENGINEER
No. 7269-C
HAWAII, U.S.A.

THIS WORK WAS PREPARED BY ME OR UNDER MY SUPERVISION.

STATE OF HAWAII
DEPARTMENT OF TRANSPORTATION
HIGHWAYS DIVISION

DESTINATION SIGNS
SIGN DETAILS
H-1 WEST

H-3 FINISH (UNIT II)
FAIP NO. I-H3-1(75), UNIT II
LEEWARD SECTION

SCALE: 1/2" = 1'-0" DATE: JANUARY 1997

SHEET NO. 6P3 OF 20 SHEETS

FED. ROAD DIST. NO.	STATE	FED. AID PROJ. NO.	FISCAL YEAR	SHEET NO.	TOTAL SHEETS
HAWAII	HAW.	I-H3-1(75), UNIT II	1997	854	1102

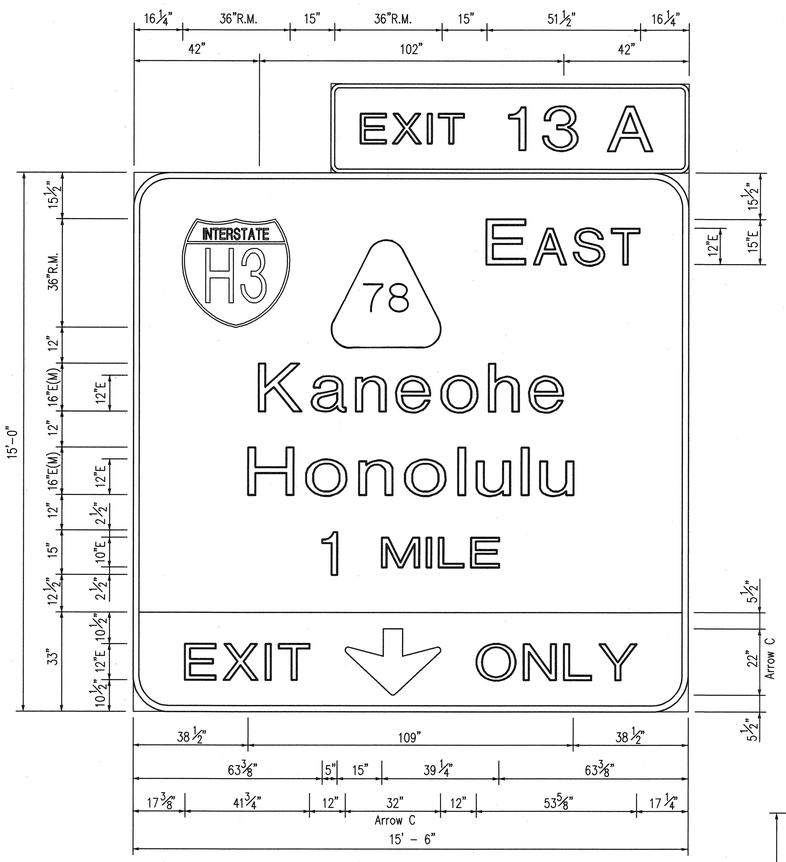

E-68R

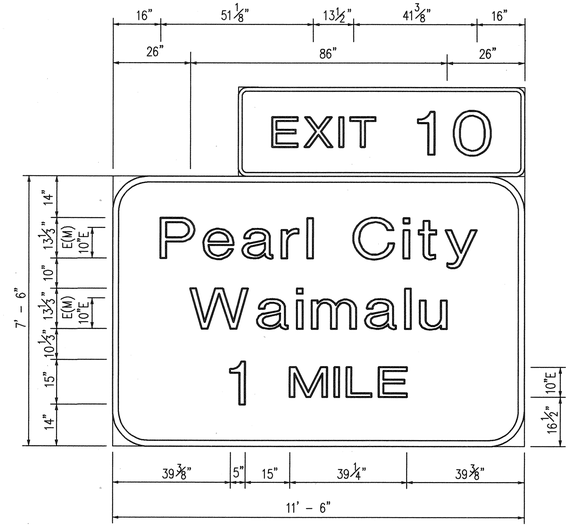

E-70

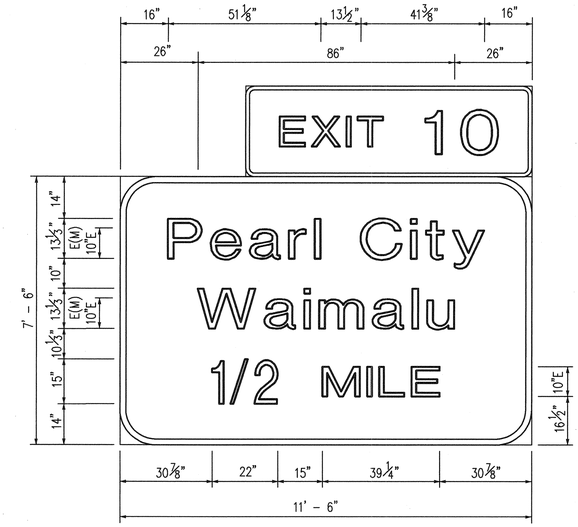

E-72

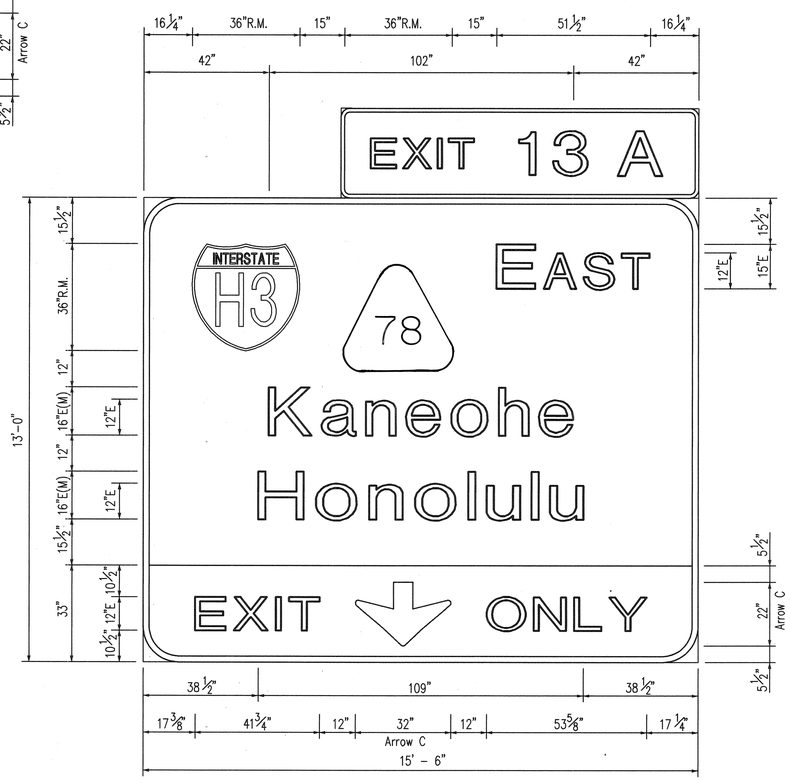

E-74R

ORIGINAL PLAN	SURVEY PLOTTED BY	DATE
NOTE BOOK	DRAWN BY	"
	TRACED BY	"
	DESIGNED BY	"
No.	QUANTITIES BY	"
	CHECKED BY	"

CAD by J. IMAGIRA, 55-52

Last Saved: J:\H3RF\RFU2\SIGN\SD-H1W-2.dwg 02/24/97 at 07:33

RANDALL M. URASAKI
LICENSED PROFESSIONAL ENGINEER
No. 7269-C
HAWAII, U.S.A.

THIS WORK WAS PREPARED BY ME OR UNDER MY SUPERVISION.

STATE OF HAWAII
DEPARTMENT OF TRANSPORTATION
HIGHWAYS DIVISION

DESTINATION SIGNS
SIGN DETAILS
H-1 WEST

H-3 FINISH (UNIT II)
FAIP NO. I-H3-1(75), UNIT II
LEEWARD SECTION

SCALE: 1/2" = 1'-0" DATE: JANUARY 1997

SHEET NO. 6P4 OF 20 SHEETS

854

FED. ROAD DIST. NO.	STATE	FED. AID PROJ. NO.	FISCAL YEAR	SHEET NO.	TOTAL SHEETS
HAWAII	HAW.	I-H3-1(75), UNIT II	1997	855	1102

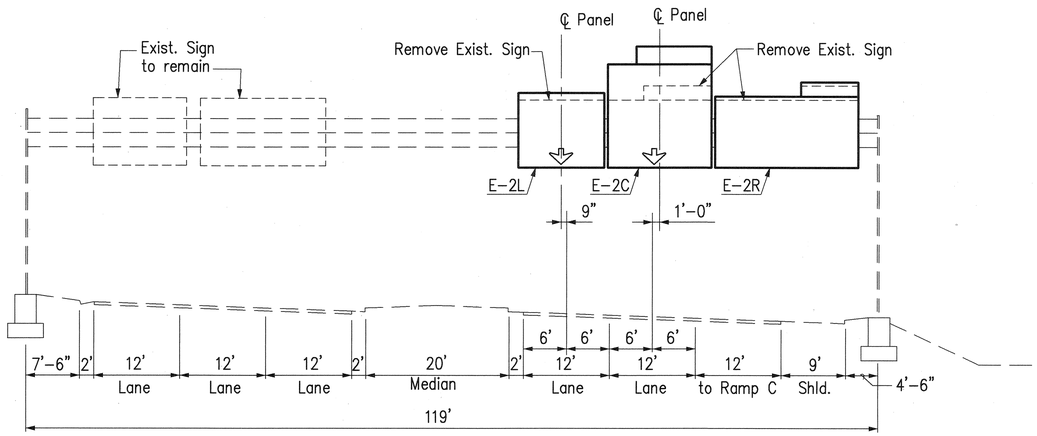

SIGN LAYOUT E-2L, E-2C & E-2R

Moanalua Freeway Inbound Sta. 136+80

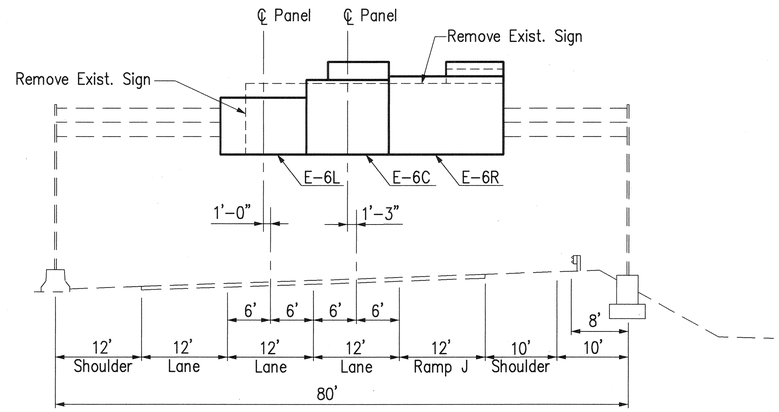

SIGN LAYOUT E-6L, E-6C & E-6R

Moanalua Freeway Inbound Sta. 158+90

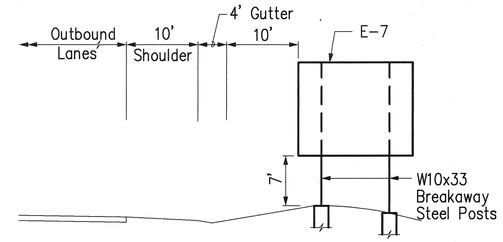

NOTE FOR SIGN E-7:

1. Remove and dispose existing sign, posts, and footings.

SIGN LAYOUT E-7

Interstate Route H-1 Outbound Sta. 59+00

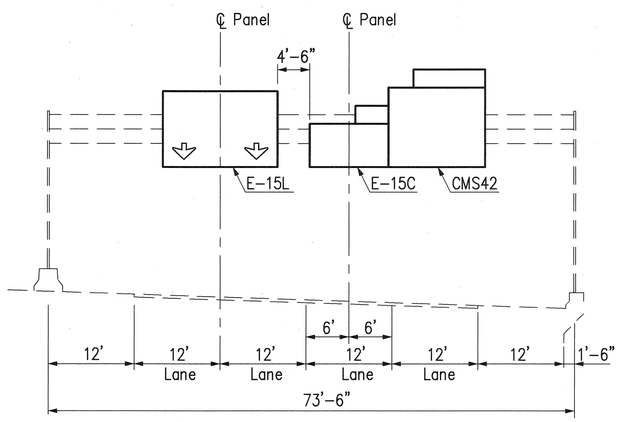

SIGN LAYOUT E-15L, E-15C & CMS42

Moanalua Freeway Inbound Sta. 188+10

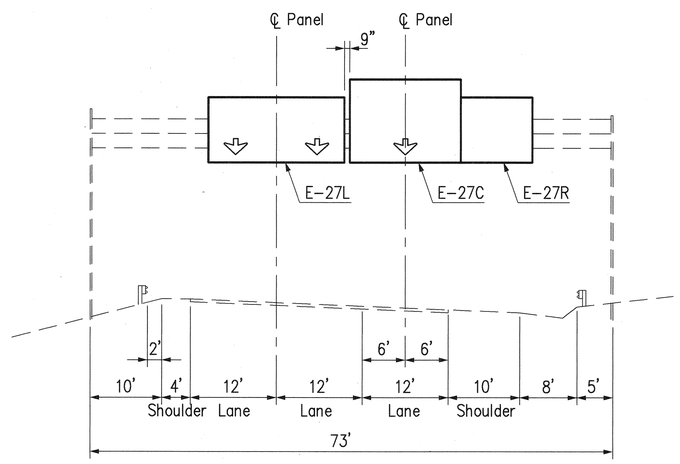

SIGN LAYOUT E-27L, E-27C & E-27R

Ulune Extension Sta. 34+35

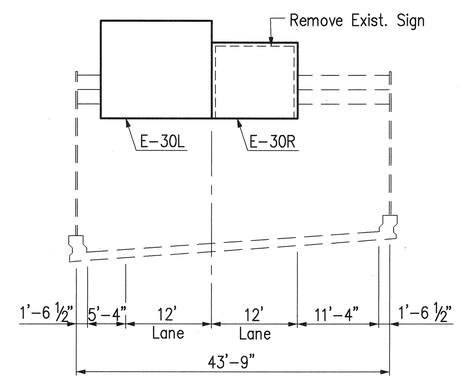

SIGN LAYOUT E-30L & E-30R

Ramp WE Sta. 225+25

Note: Exit Sign Panels on top of CMS Signs, shall be adjacent to the right beacon. (Looking at Sign)

RANDALL M. URASAKI
LICENSED PROFESSIONAL ENGINEER
No. 7269-C
HAWAII, U.S.A.

THIS WORK WAS PREPARED BY ME OR UNDER MY SUPERVISION.

STATE OF HAWAII
DEPARTMENT OF TRANSPORTATION
HIGHWAYS DIVISION

DESTINATION SIGNS
SIGN LAYOUTS
HALAWA INTERCHANGE

H-3 FINISH (UNIT II)
FAIP NO. I-H3-1(75), UNIT II
LEEWARD SECTION

SCALE: 1" = 10' DATE: JANUARY 1997

SHEET NO. 6P5 OF 20 SHEETS

ORIGINAL PLAN | SURVEY PLOTTED BY | DRAWN BY | TRACED BY | DESIGNED BY | QUANTITIES BY | CHECKED BY | DATE
NOTE BOOK No.

CAD by J. MINURA, 55-52

Last Saved: J:\H3RF\RFU2\SIGN\SLO-HIC1.dwg 02/24/97 at 07:36

FED. ROAD DIST. NO.	STATE	FED. AID PROJ. NO.	FISCAL YEAR	SHEET NO.	TOTAL SHEETS
HAWAII	HAW.	I-H3-1(75), UNIT II	1997	856	1102

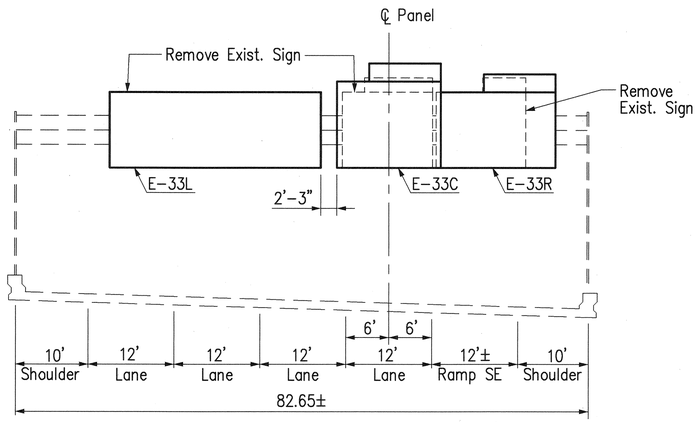

SIGN LAYOUT E-33L, E-33C & E-33R

Interstate Route H-1 Outbound Sta. 6+05

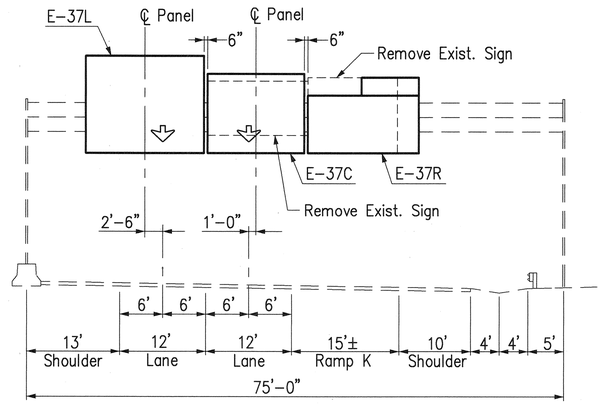

SIGN LAYOUT E-37L, E-37C & E-37R

Interstate Route H-3 Inbound Sta. 261+25

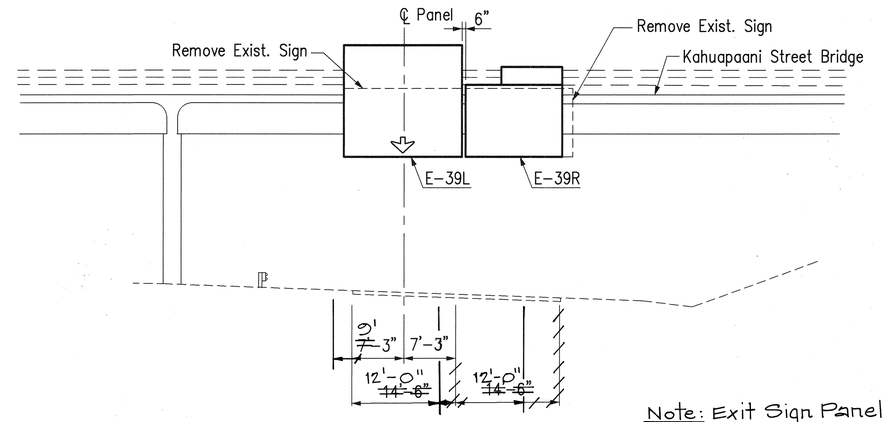

SIGN LAYOUT E-39L & E-39R

Ramp ES Sta. 50+13

Note: Exit Sign Panels on top of CMS Signs, shall be adjacent to the right beacon. (Looking at Sign)

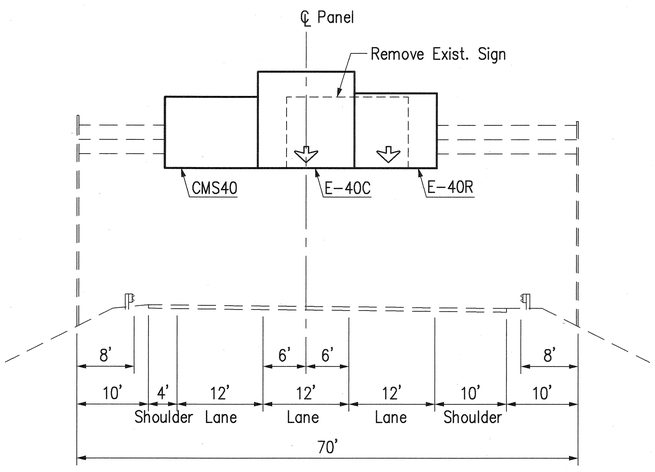

SIGN LAYOUT CMS40, E-40C & E-40R

Ramp WE Sta. 244+25

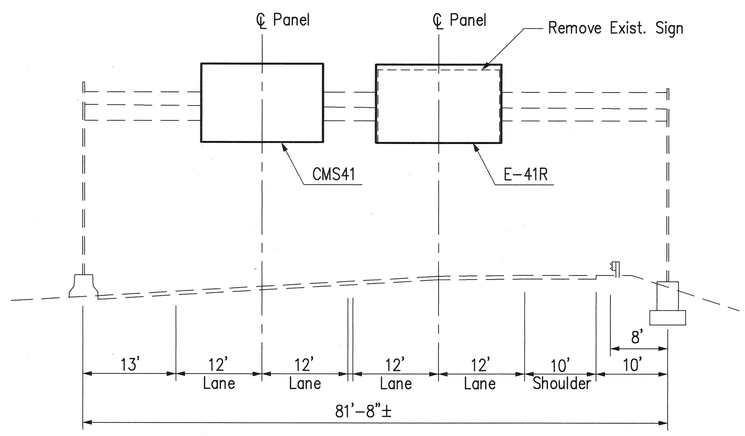

SIGN LAYOUT CMS41 & E-41R

Ramp P Sta. 12+00

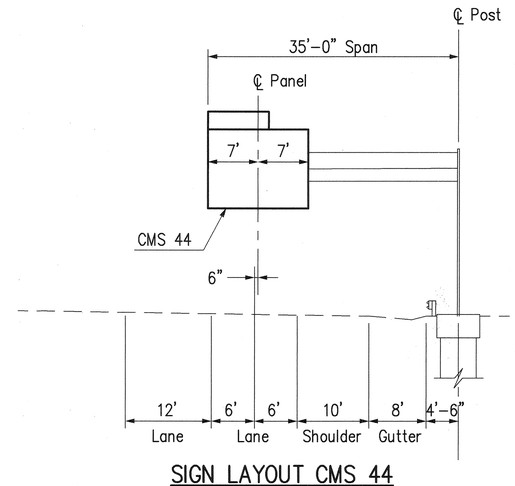

SIGN LAYOUT CMS 44

Moanalua Freeway Inbound Sta. 181+00

RANDALL M. URASAKI
LICENSED PROFESSIONAL ENGINEER
No. 7269-C
HAWAII, U.S.A.

THIS WORK WAS PREPARED BY ME OR UNDER MY SUPERVISION.

STATE OF HAWAII
DEPARTMENT OF TRANSPORTATION
HIGHWAYS DIVISION

DESTINATION SIGNS
SIGN LAYOUTS
HALAWA INTERCHANGE

H-3 FINISH (UNIT II)
FAIP NO. I-H3-1(75), UNIT II
LEEWARD SECTION

SCALE: 1" = 10' DATE: JANUARY 1997

SHEET NO. 6P6 OF 20 SHEETS

856

ORIGINAL PLAN | SURVEY PLOTTED BY | DRAWN BY | TRACED BY | DESIGNED BY | QUANTITIES BY | CHECKED BY | DATE
NOTE BOOK No.

CAD by J. Mimura, 55-52

Last Saved: J:\H3RF\RFU2\SIGN\SLO-HIC2.dwg 02/24/97 at 07:55

FED. ROAD DIST. NO.	STATE	FED. AID PROJ. NO.	FISCAL YEAR	SHEET NO.	TOTAL SHEETS
HAWAII	HAW.	I-H3-1(75), UNIT II	1997	ADD. 856S-1	1102

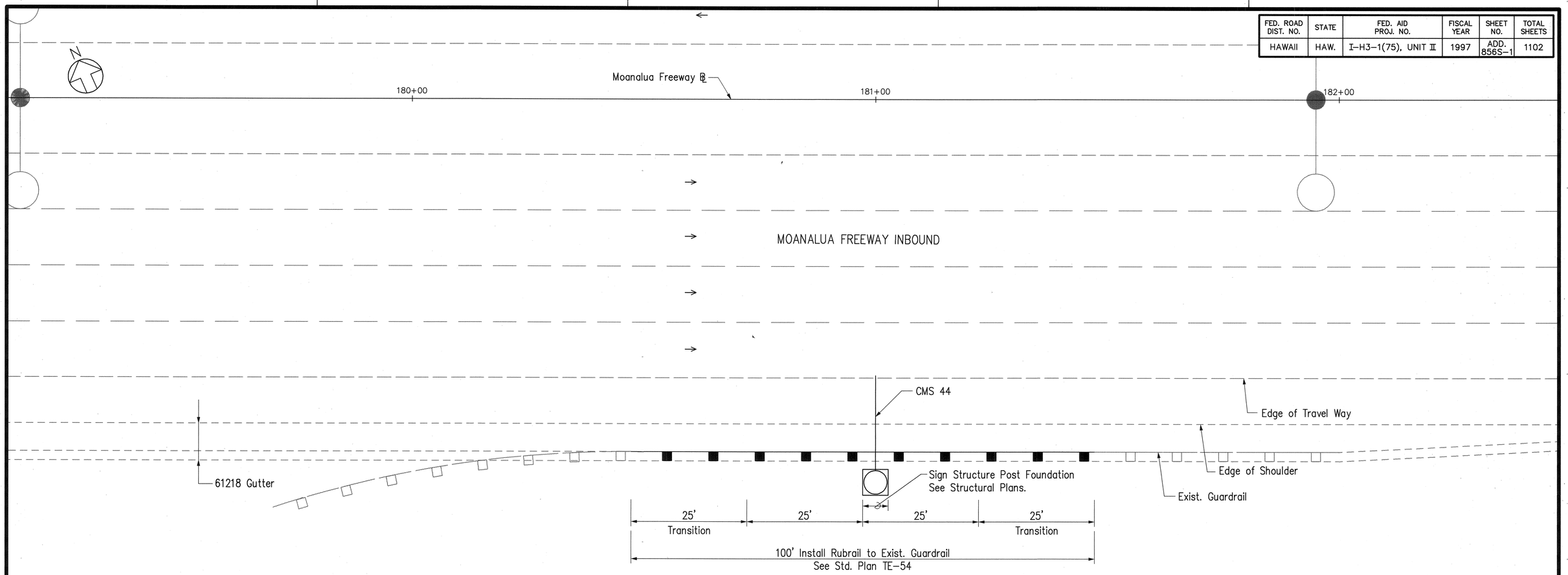

CMS 44 LOCATION PLAN

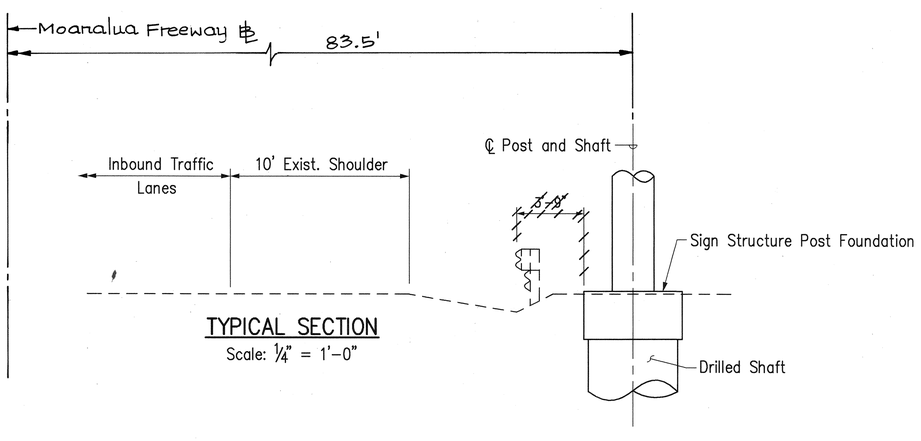

TYPICAL SECTION

Scale: ¼" = 1'-0"

ORIGINAL PLAN	SURVEY PLOTTED BY	DATE
	DRAWN BY	
	TRACED BY	
NOTE BOOK	DESIGNED BY	
	QUANTITIES BY	
No.	CHECKED BY	

CAD by L. Fujioka, 95-55

Last Saved: J:\H3RF\RFU2\C2\CP-MF6.dwg 05/01/97 at 13:58

RANDALL M. URASAKI
LICENSED PROFESSIONAL ENGINEER
No. 7269-C
HAWAII, U.S.A.

THIS WORK WAS PREPARED BY ME OR UNDER MY SUPERVISION.

Date	Revision
5/2/97	Added Sheet

STATE OF HAWAII
DEPARTMENT OF TRANSPORTATION
HIGHWAYS DIVISION

DESTINATION SIGNS
ROADWAY CONSTRUCTION
CMS44

H-3 FINISH (UNIT II)
FAIP NO. I-H3-1(75), UNIT II
LEEWARD SECTION

SCALE: 1" = 10' DATE: MAY 1997

SHEET NO. 6P6A OF 20 SHEETS

ADD. 856S-1

FED. ROAD DIST. NO.	STATE	FED. AID PROJ. NO.	FISCAL YEAR	SHEET NO.	TOTAL SHEETS
HAWAII	HAW.	I-H3-1(75), UNIT II	1997	857	1102

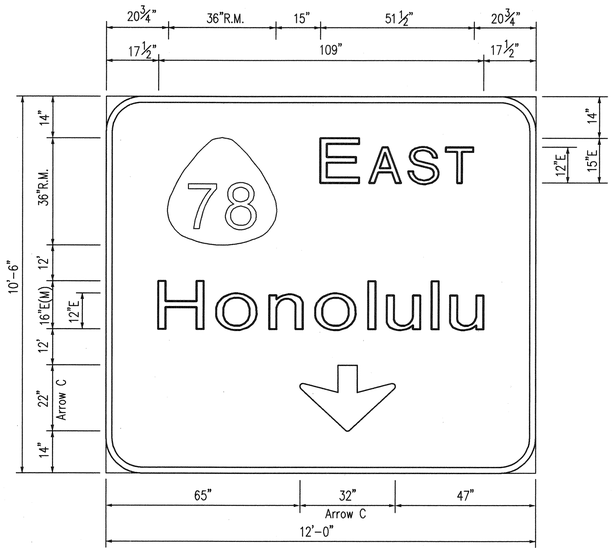

E-2L

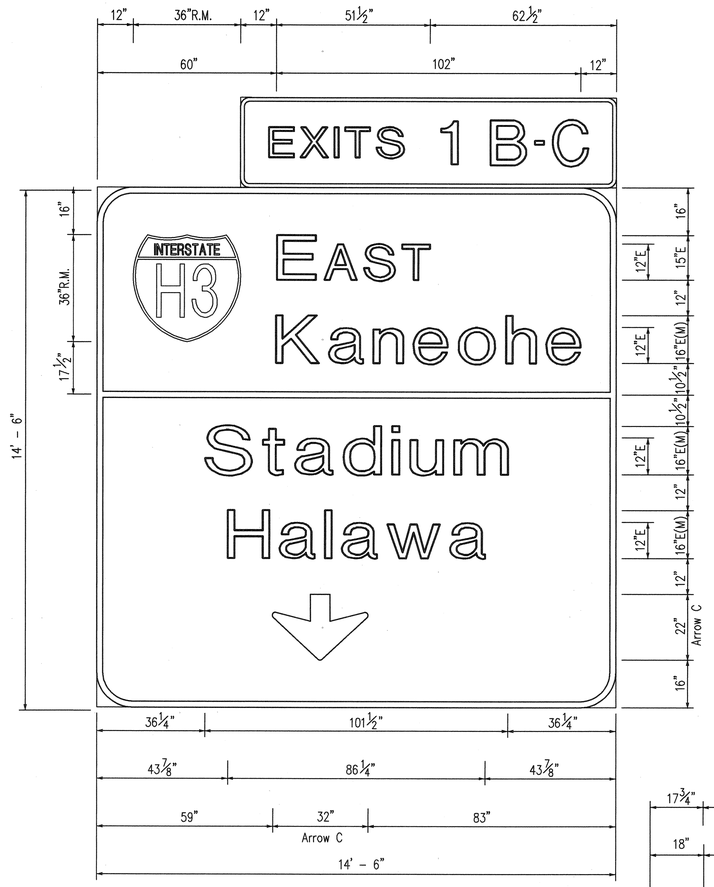

E-2C

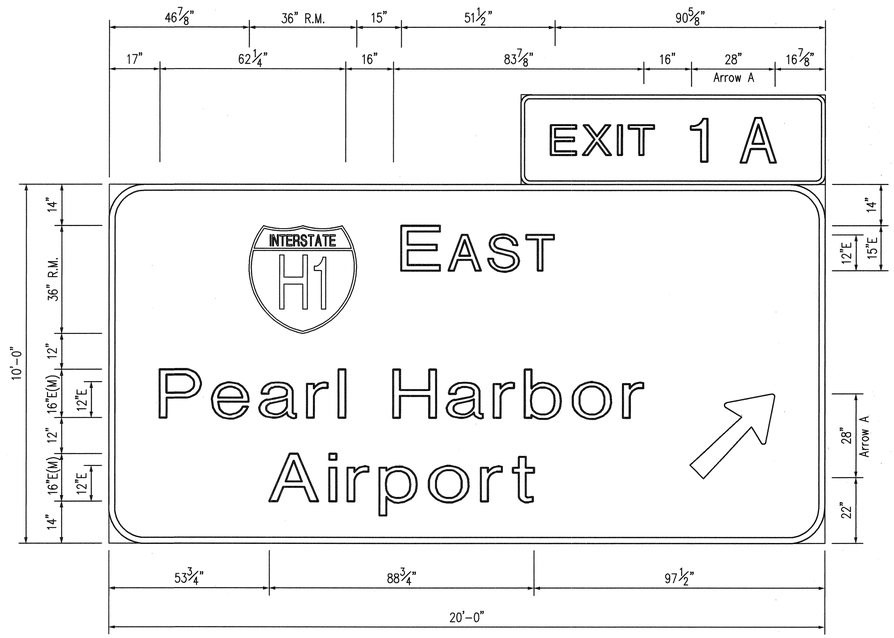

E-2R

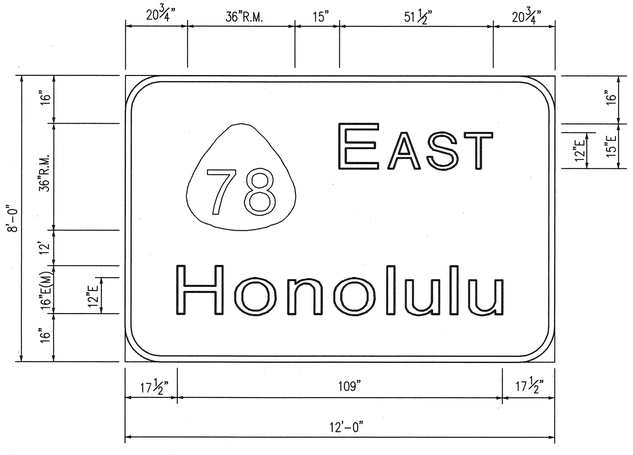

E-6L

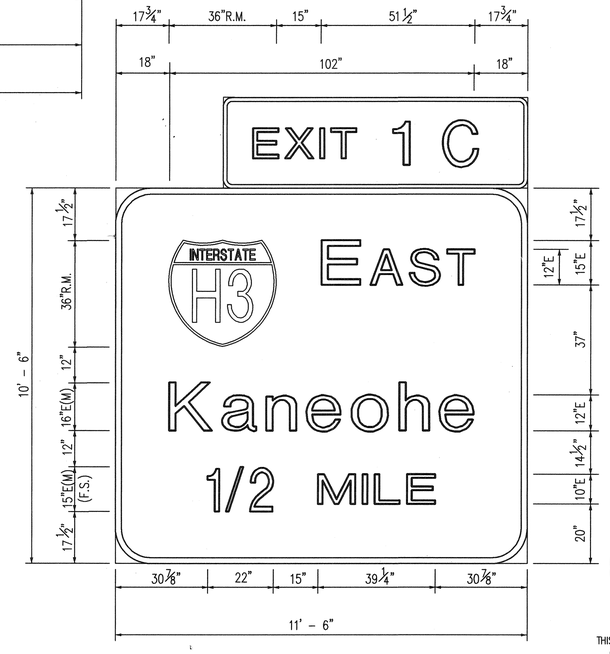

E-6C

RANDALL M. URASAKI
LICENSED PROFESSIONAL ENGINEER
No. 7269-C
HAWAII, U.S.A.

THIS WORK WAS PREPARED BY ME OR UNDER MY SUPERVISION.

STATE OF HAWAII
DEPARTMENT OF TRANSPORTATION
HIGHWAYS DIVISION

DESTINATION SIGNS
SIGN DETAILS
HALAWA INTERCHANGE

H-3 FINISH (UNIT II)
FAIP NO. I-H3-1(75), UNIT II
LEEWARD SECTION

SCALE: 1/2" = 1'-0" DATE: JANUARY 1997

SHEET NO. 6P7 OF 20 SHEETS

ORIGINAL PLAN	SURVEY PLOTTED BY	DATE
	DRAWN BY "	"
NOTE BOOK	TRACED BY "	"
	DESIGNED BY "	"
No.	QUANTITIES BY "	"
	CHECKED BY "	"

CAD by J. Mimura, 55-52

Last Saved: J:\H3RF\RFU2\SIGN\SD-HIC1.dwg 02/24/97 at 07:56

FED. ROAD DIST. NO.	STATE	FED. AID PROJ. NO.	FISCAL YEAR	SHEET NO.	TOTAL SHEETS
HAWAII	HAW.	I-H3-1(75), UNIT II	1997	858	1102

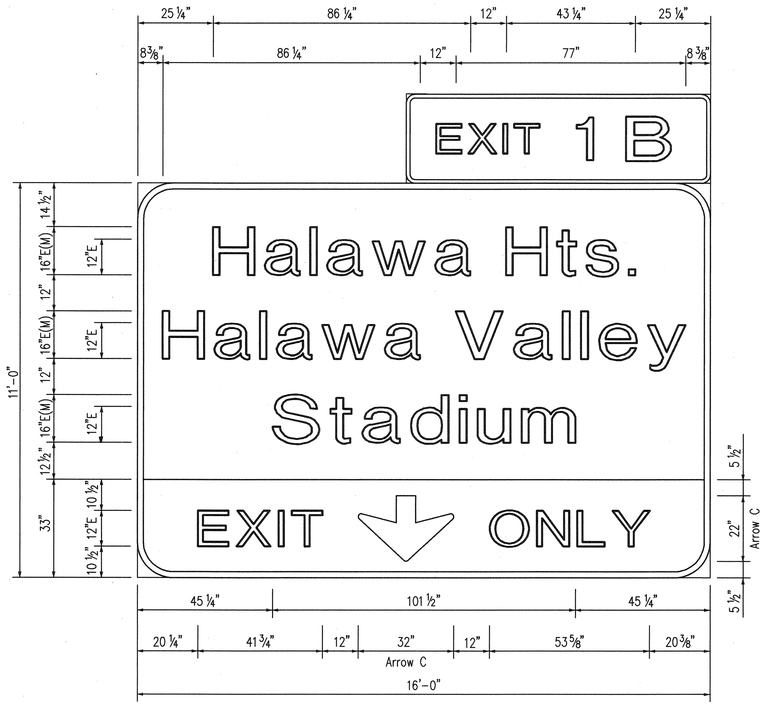

E-6R

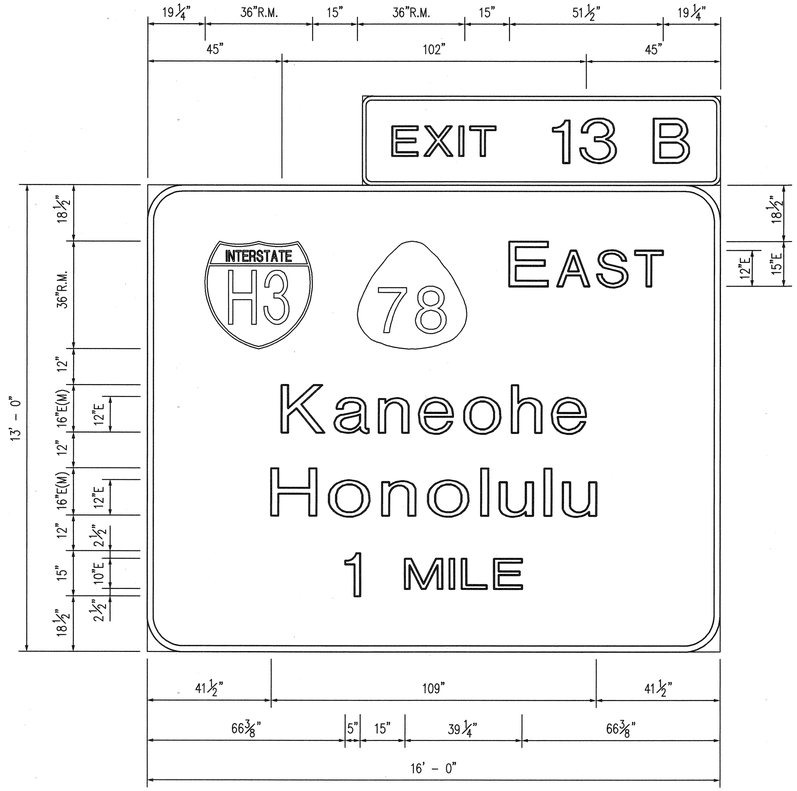

E-7

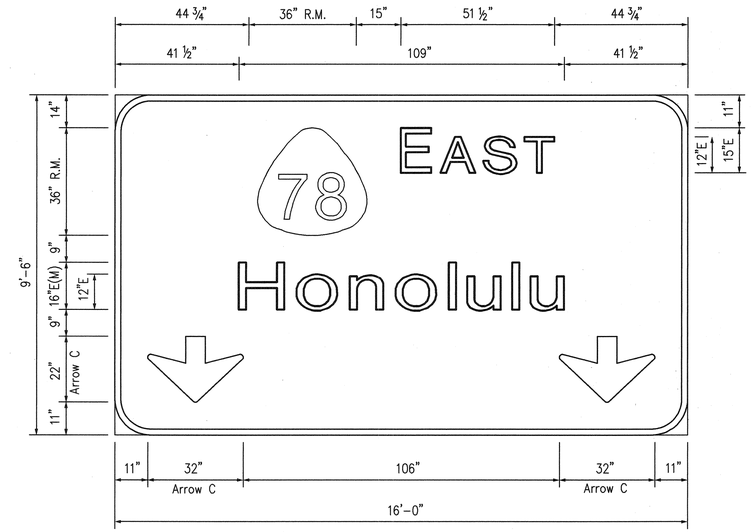

E-15L

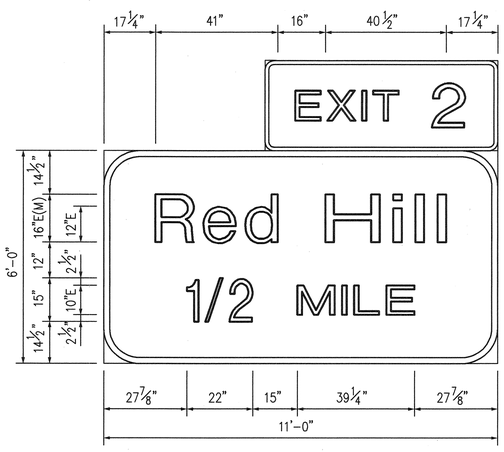

E-15C

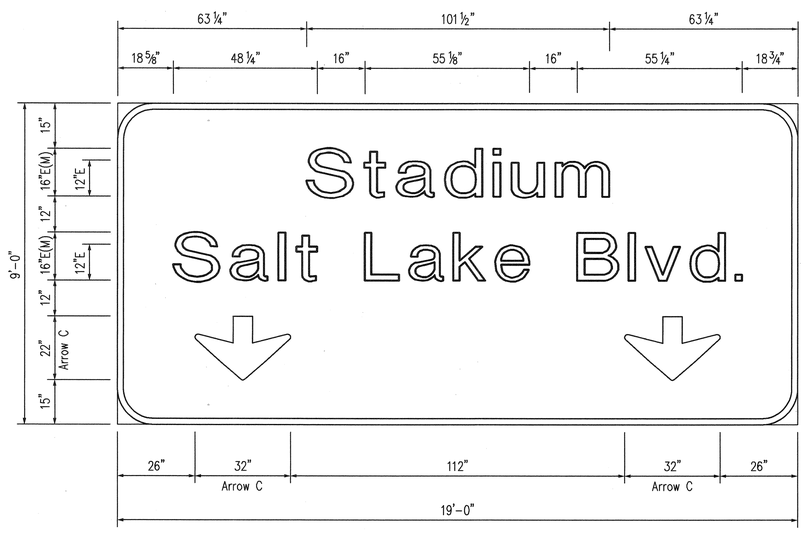

E-27L

ORIGINAL PLAN	
SURVEY PLOTTED BY	DATE
DRAWN BY	
TRACED BY	
NOTE BOOK DESIGNED BY	
QUANTITIES BY	
No. CHECKED BY	

CAD by J. Mimuro, 55-52

Last Saved: J:\H3RF\RFU2\SIGN\SD-HIC2.dwg 02/24/97 at 08:09

RANDALL M. URASAKI
LICENSED PROFESSIONAL ENGINEER
No. 7269-C
HAWAII, U.S.A.

THIS WORK WAS PREPARED BY ME OR UNDER MY SUPERVISION.

STATE OF HAWAII
DEPARTMENT OF TRANSPORTATION
HIGHWAYS DIVISION

DESTINATION SIGNS
SIGN DETAILS
HALAWA INTERCHANGE

H-3 FINISH (UNIT II)
FAIP NO. I-H3-1(75), UNIT II
LEEWARD SECTION

SCALE: 1/2" = 1'-0" DATE: JANUARY 1997

SHEET NO. 6P8 OF 20 SHEETS

FED. ROAD DIST. NO.	STATE	FED. AID PROJ. NO.	FISCAL YEAR	SHEET NO.	TOTAL SHEETS
HAWAII	HAW.	I-H3-1(75), UNIT II	1997	859	1102

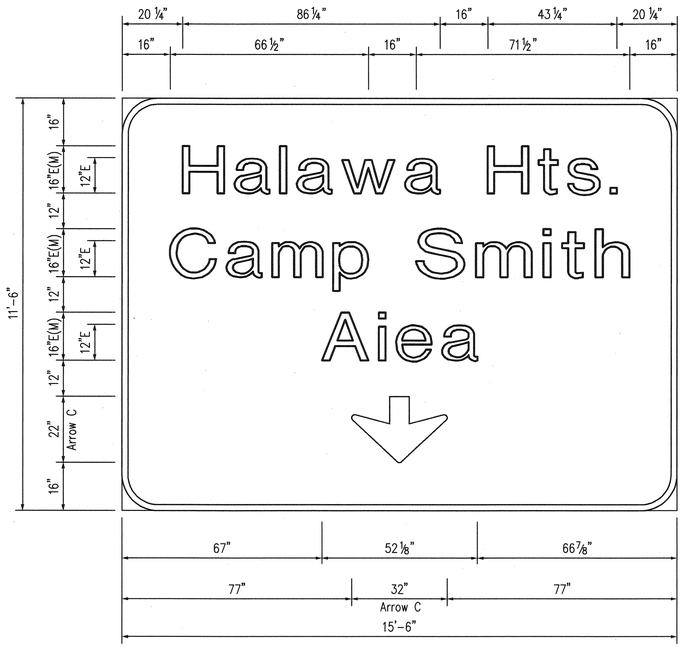

E-27C

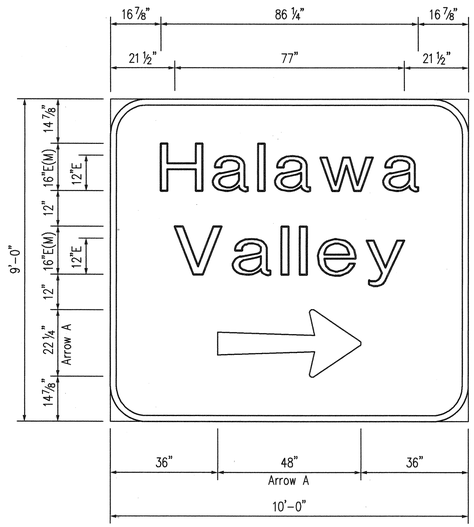

E-27R

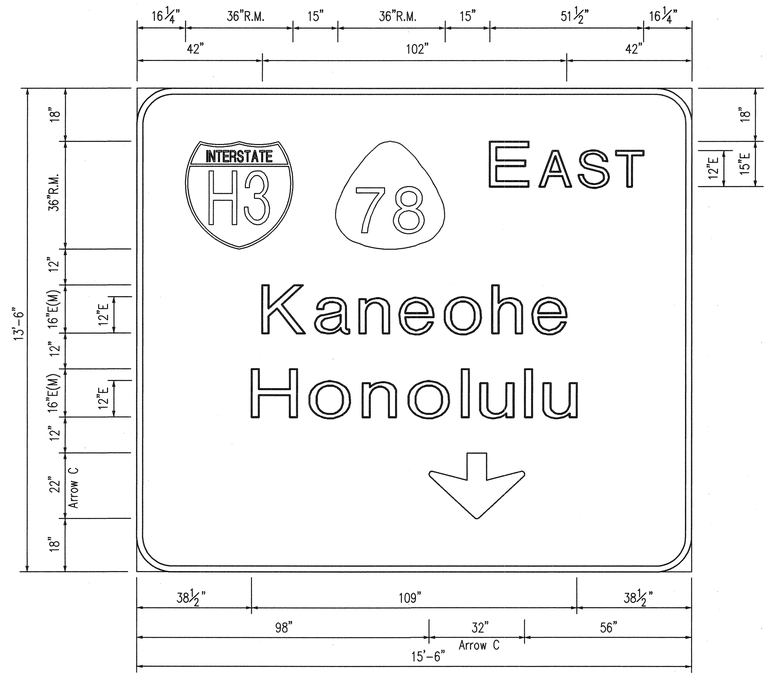

E-30L

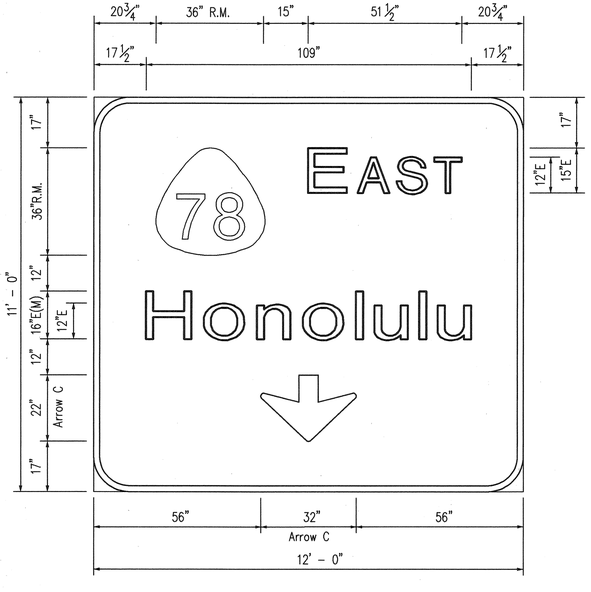

E-30R

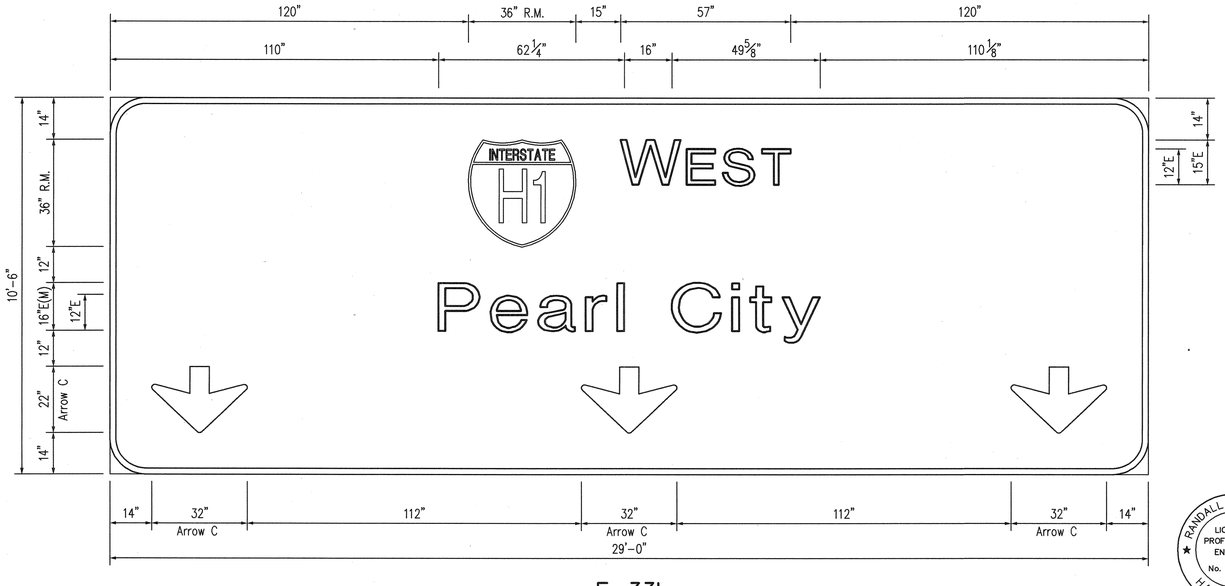

E-33L

RANDALL M. URASAKI
LICENSED PROFESSIONAL ENGINEER
No. 7269-C
HAWAII, U.S.A.

THIS WORK WAS PREPARED BY ME OR UNDER MY SUPERVISION.

STATE OF HAWAII
DEPARTMENT OF TRANSPORTATION
HIGHWAYS DIVISION

DESTINATION SIGNS
SIGN DETAILS
HALAWA INTERCHANGE

H-3 FINISH (UNIT II)
FAIP NO. I-H3-1(75), UNIT II
LEEWARD SECTION

SCALE: 1/2" = 1'-0" DATE: JANUARY 1997

SHEET NO. 6P9 OF 20 SHEETS

ORIGINAL PLAN
NOTE BOOK No. ____
SURVEY PLOTTED BY ____ DATE ____
DRAWN BY ____
TRACED BY ____
DESIGNED BY ____
QUANTITIES BY ____
CHECKED BY ____

CAD by J. MINURA, 55-52

Last Saved: J:\H3RF\RFU2\SIGN\SD-HIC3.dwg 02/24/97 at 08:10

FED. ROAD DIST. NO.	STATE	FED. AID PROJ. NO.	FISCAL YEAR	SHEET NO.	TOTAL SHEETS
HAWAII	HAW.	I-H3-1(75), UNIT II	1997	860	1102

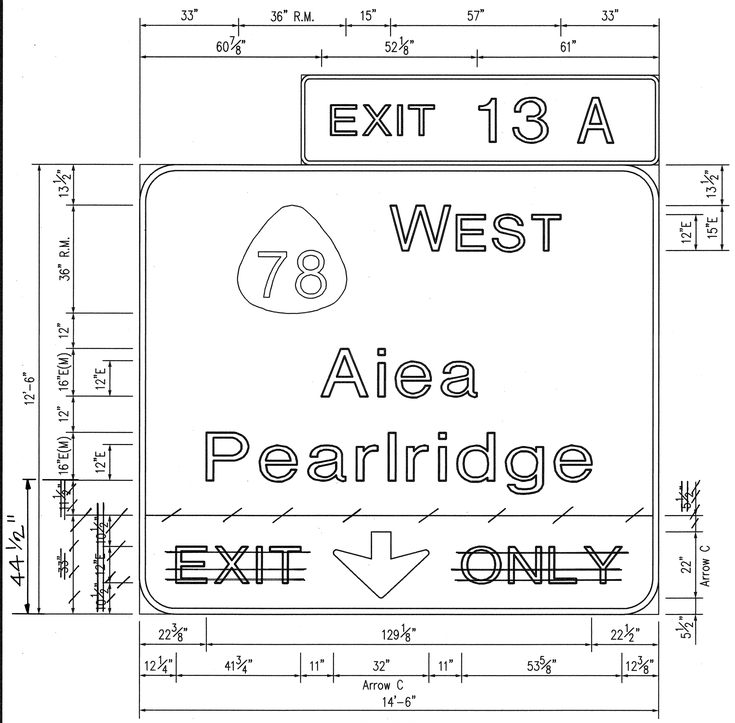

E-33C

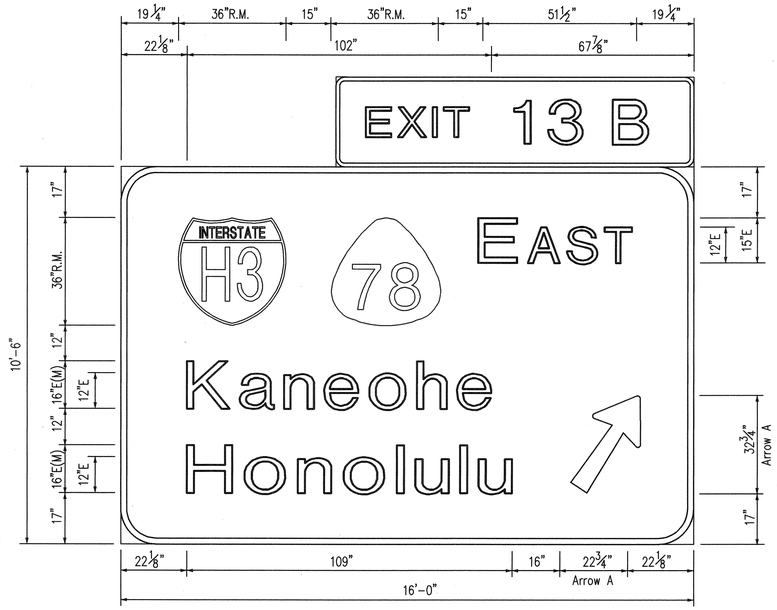

E-33R

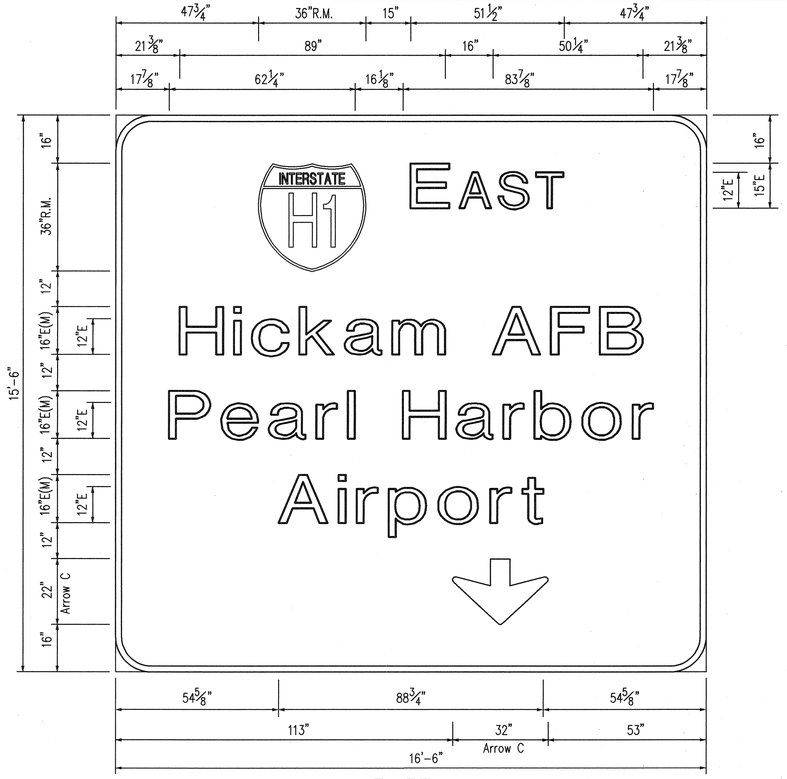

E-37L

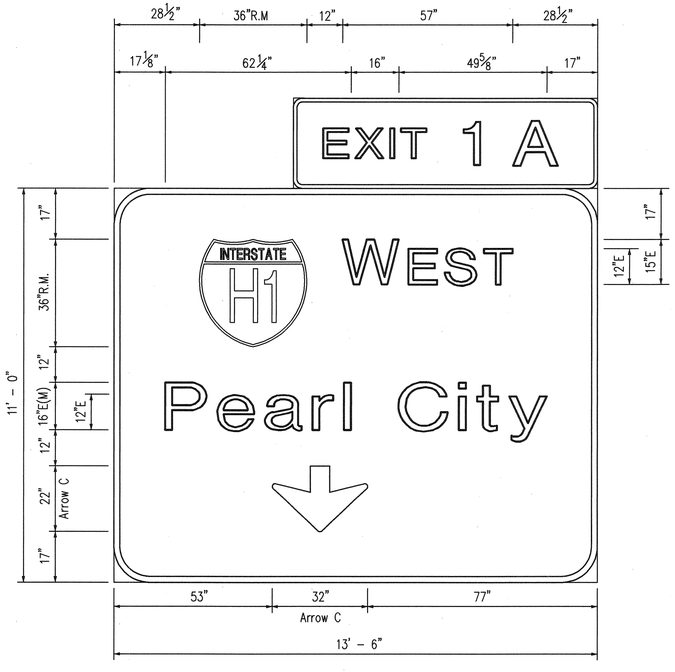

E-37C

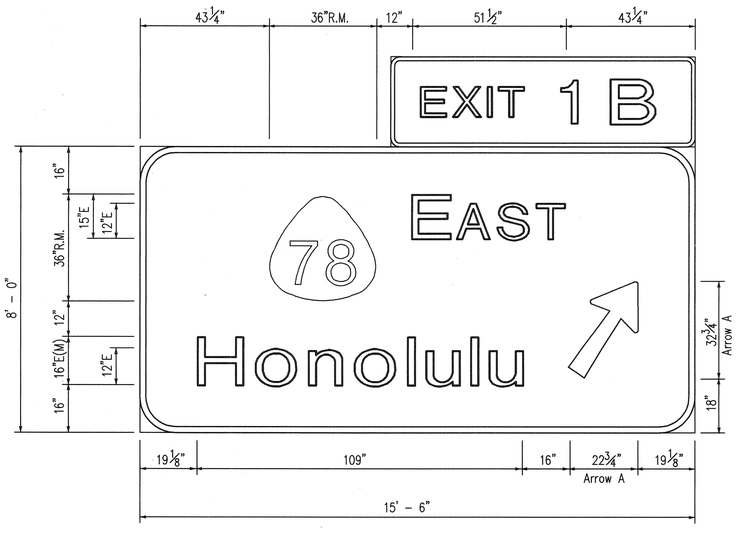

E-37R

ORIGINAL PLAN	SURVEY PLOTTED BY	DATE
	DRAWN BY	
NOTE BOOK	TRACED BY	
	DESIGNED BY	
	QUANTITIES BY	
No.	CHECKED BY	

CAD by J. MINAURA, 55-52

Last Saved: J:\H3RF\RFU2\SIGN\SD-HIC4.dwg 02/24/97 at 08:11

RANDALL M. URASAKI
LICENSED PROFESSIONAL ENGINEER
No. 7269-C
HAWAII, U.S.A.

THIS WORK WAS PREPARED BY ME OR UNDER MY SUPERVISION.

STATE OF HAWAII
DEPARTMENT OF TRANSPORTATION
HIGHWAYS DIVISION

DESTINATION SIGNS
SIGN DETAILS
HALAWA INTERCHANGE

H-3 FINISH (UNIT II)
FAIP NO. I-H3-1(75), UNIT II
LEEWARD SECTION

SCALE: 1/2" = 1'-0" DATE: JANUARY 1997

SHEET NO. 6P10 OF 20 SHEETS

FED. ROAD DIST. NO.	STATE	FED. AID PROJ. NO.	FISCAL YEAR	SHEET NO.	TOTAL SHEETS
HAWAII	HAW.	I-H3-1(75), UNIT II	1997	861	1102

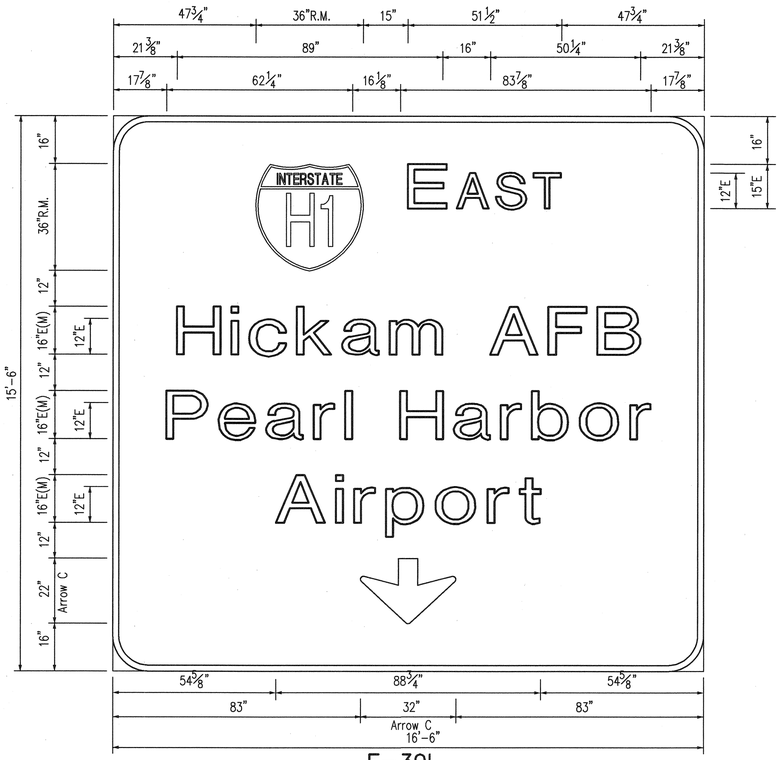

E-39L

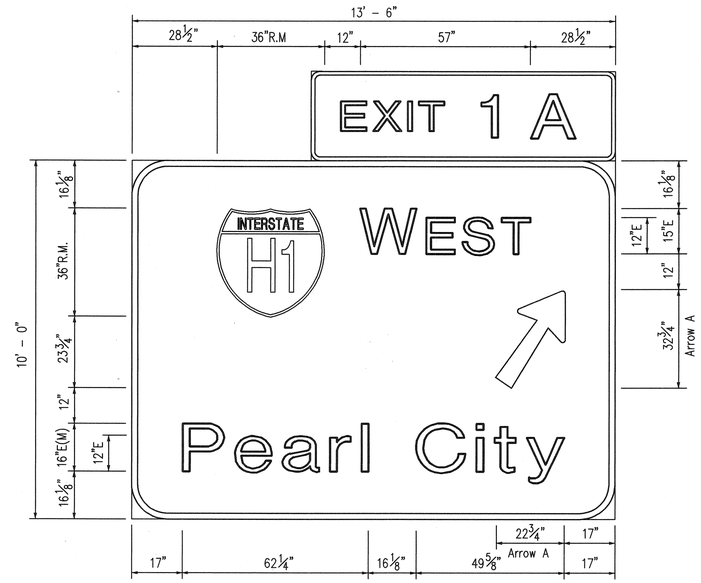

E-39R

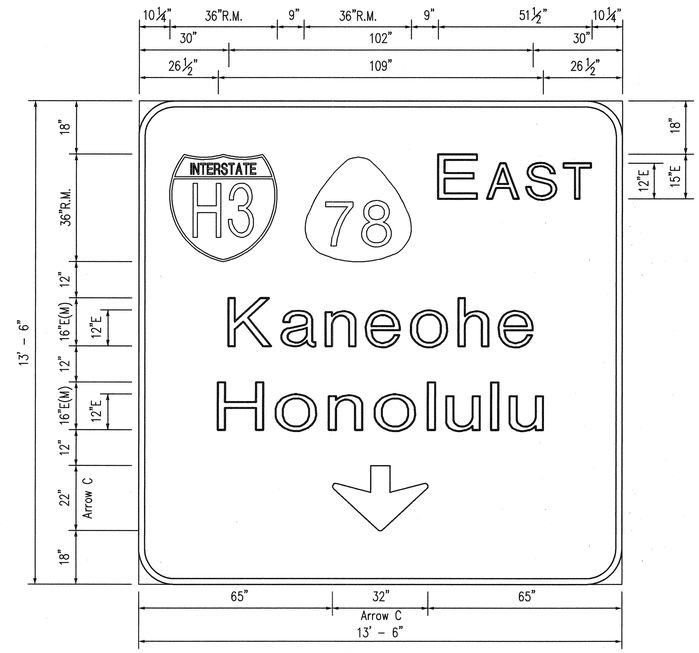

E-40C

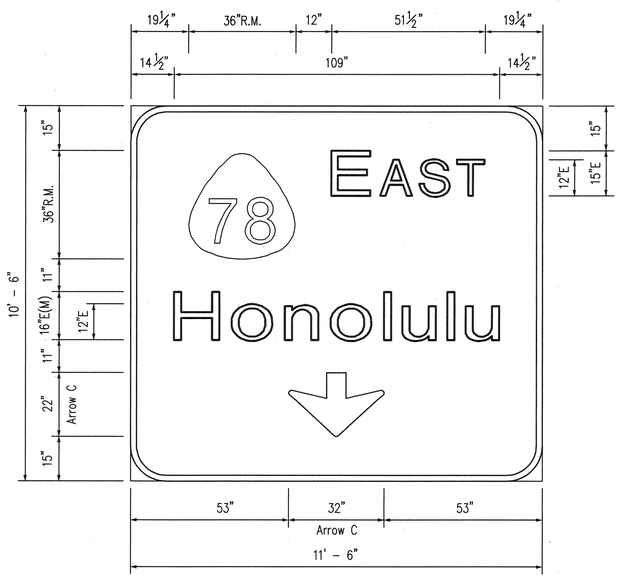

E-40R

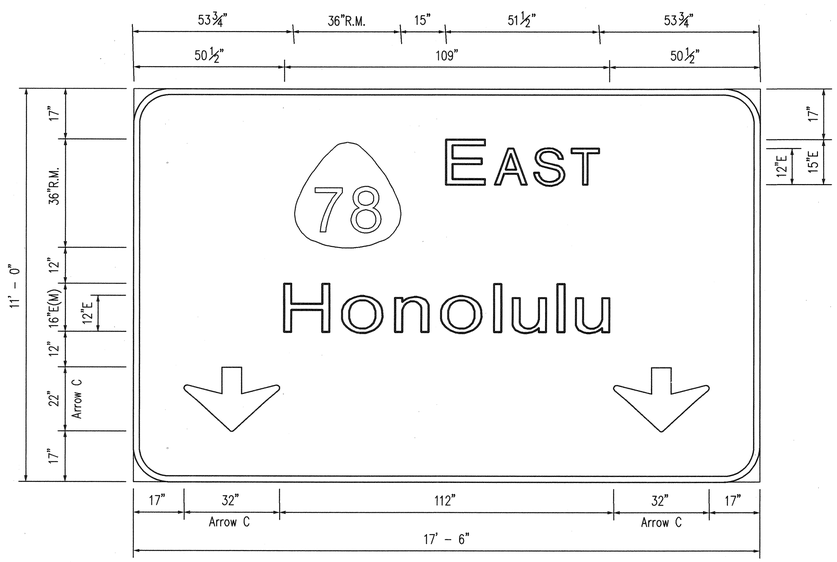

E-41R

ORIGINAL PLAN	SURVEY PLOTTED BY	DATE
	DRAWN BY	"
	TRACED BY	"
NOTE BOOK	DESIGNED BY	"
	QUANTITIES BY	"
No.	CHECKED BY	"

CAD by J. MINURA, 55-52

Last Saved: J:\H3RF\RFU2\SIGN\SD-HIC5.dwg 02/24/97 at 08:12

RANDALL M. URASAKI
LICENSED PROFESSIONAL ENGINEER
No. 7269-C
HAWAII, U.S.A.

THIS WORK WAS PREPARED BY ME OR UNDER MY SUPERVISION.

STATE OF HAWAII
DEPARTMENT OF TRANSPORTATION
HIGHWAYS DIVISION

DESTINATION SIGNS
SIGN DETAILS
HALAWA INTERCHANGE

H-3 FINISH (UNIT II)
FAIP NO. I-H3-1(75), UNIT II
LEEWARD SECTION

SCALE: 1/2" = 1'-0" DATE: JANUARY 1997

SHEET NO. 6P11 OF 20 SHEETS

861

FED. ROAD DIST. NO.	STATE	FED. AID PROJ. NO.	FISCAL YEAR	SHEET NO.	TOTAL SHEETS
HAWAII	HAW.	I-H3-1(75), UNIT II	1997	C.O. 862	1102

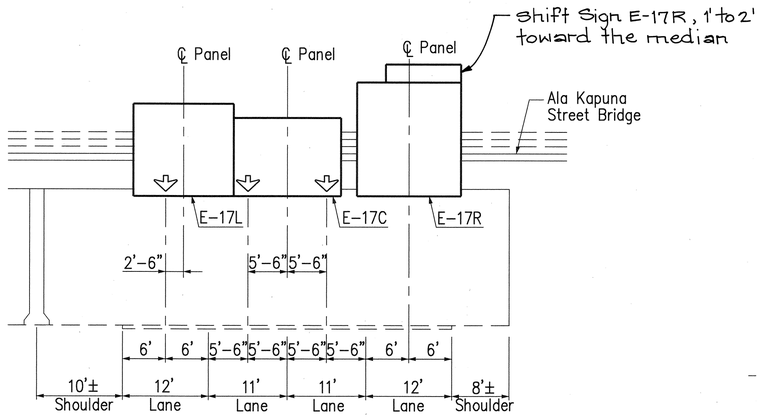

NOTE:
Remove exist. sign panels

SIGN LAYOUT E-17L, E-17C & E-17R

Moanalua Freeway Outbound Sta. 226+00±

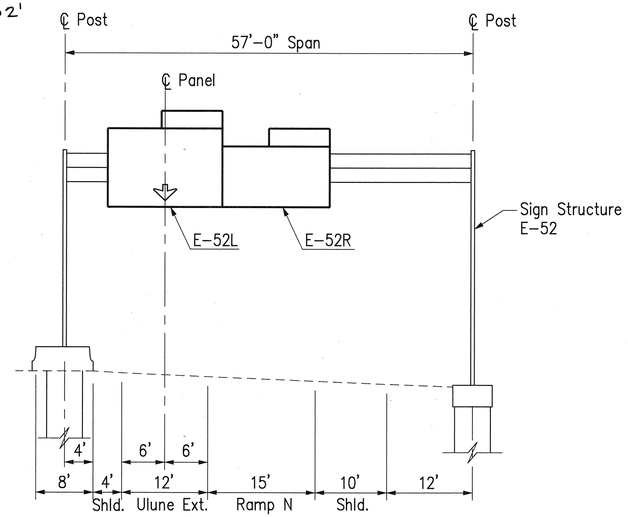

SIGN LAYOUT E-52L & E-52R

Ramp N Sta. 34+76±

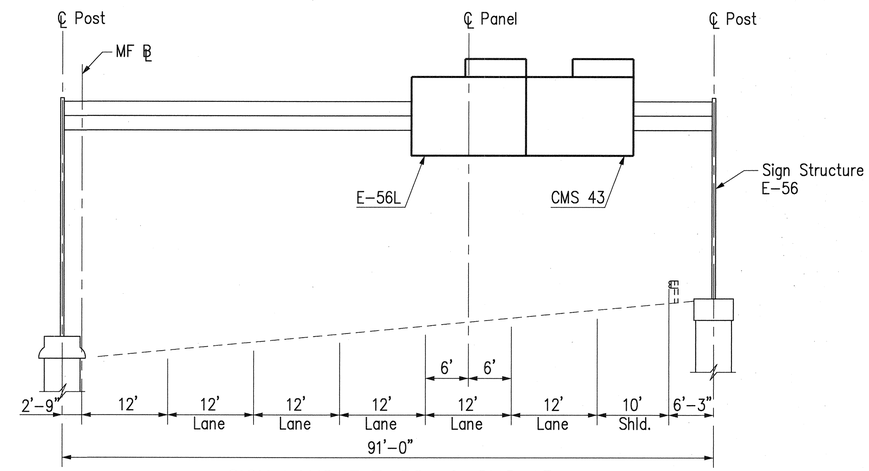

SIGN LAYOUT E-56L & CMS 43

Moanalua Freeway Outbound Sta. 213+90

NOTE:
Exit Sign Panels on top of CMS Signs shall be adjacent to the right beacon (Looking at sign).

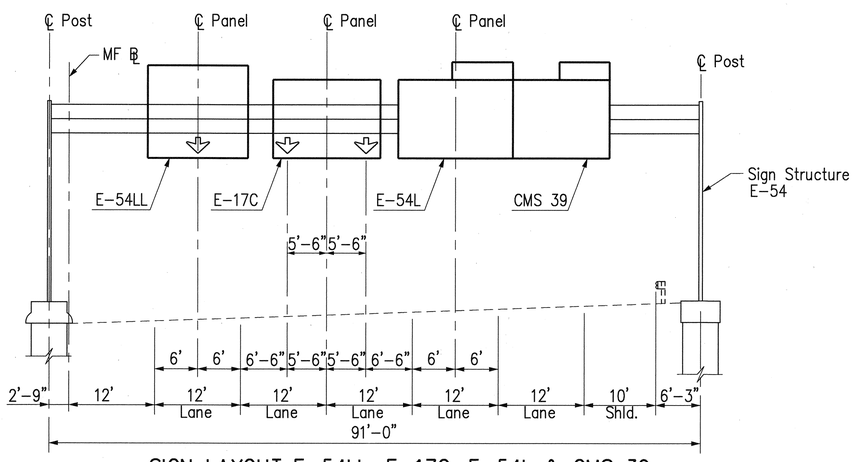

SIGN LAYOUT E-54LL, E-17C, E-54L & CMS 39

Moanalua Freeway Outbound Sta. 207+25±

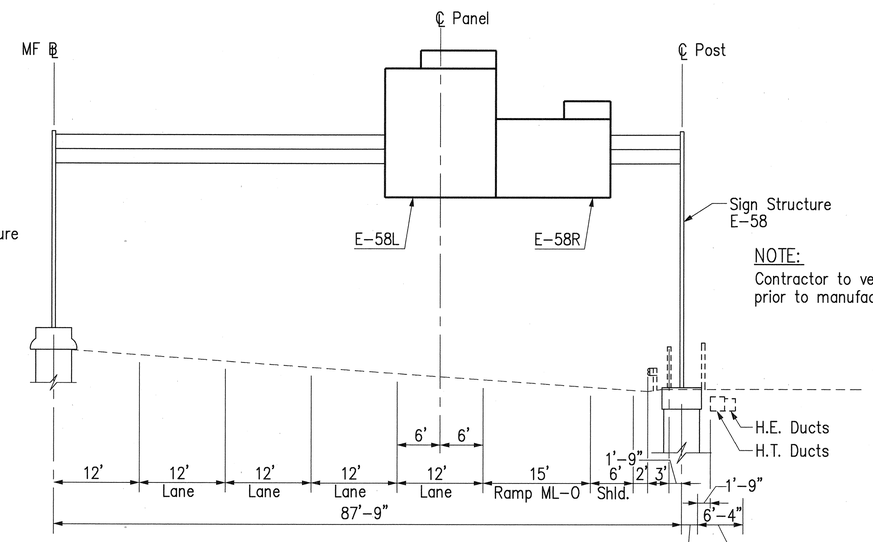

NOTE:
Contractor to verify span length prior to manufacturing sign bridge.

SIGN LAYOUT E-58L & E-58R

Moanalua Freeway Outbound Sta. 264+00

RANDALL M. URASAKI
LICENSED PROFESSIONAL ENGINEER
No. 7269-C
HAWAII, U.S.A.

THIS WORK WAS PREPARED BY ME OR UNDER MY SUPERVISION.

Date	Revision
5/22/98	Added Signs E-54LL & E-17C to Sign Structure E-54

STATE OF HAWAII
DEPARTMENT OF TRANSPORTATION
HIGHWAYS DIVISION

DESTINATION SIGNS
SIGN LAYOUTS
MOANALUA FREEWAY

H-3 FINISH (UNIT II)
FAIP NO. I-H3-1(75), UNIT II
LEEWARD SECTION

SCALE: 1" = 10' DATE: JANUARY 1997

SHEET NO. 6P12 OF 20 SHEETS

C.O. 862

ORIGINAL PLAN | SURVEY PLOTTED BY | DRAWN BY | TRACED BY | DESIGNED BY | QUANTITIES BY | CHECKED BY | DATE
NOTE BOOK No.

CAD by J. MINURA, 55-52

Last Saved: J:\H3RF\RFU2\CO\SIGN\CO-MF2.DWG.dwg 05/29/98 at 16:59

FED. ROAD DIST. NO.	STATE	FED. AID PROJ. NO.	FISCAL YEAR	SHEET NO.	TOTAL SHEETS
HAWAII	HAW.	I-H3-1(75), UNIT II	1997	ADD. 862S-1	1102

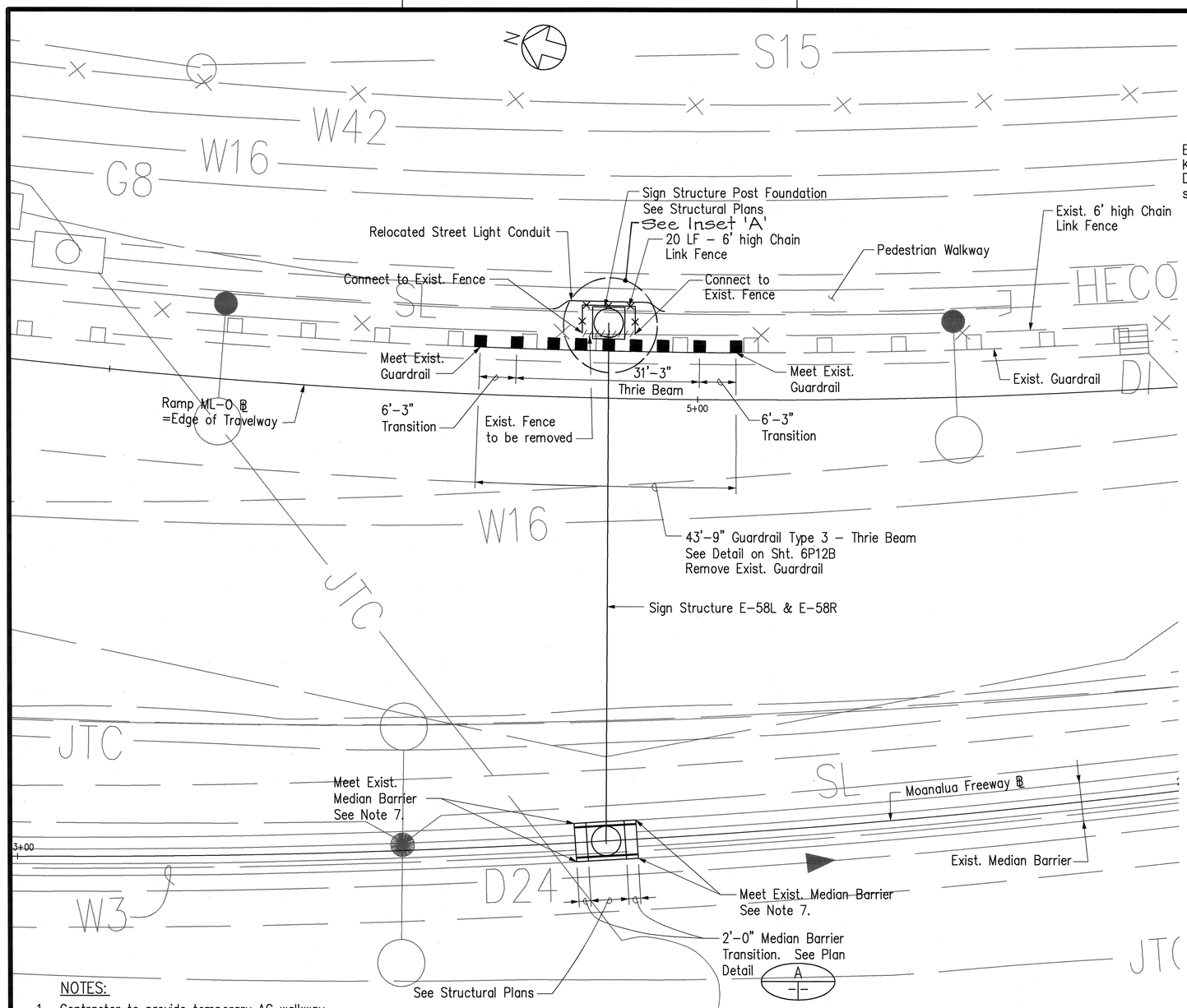

SIGN STRUCTURE E-58L & E-58R LOCATION PLAN

Scale: 1" = 10'

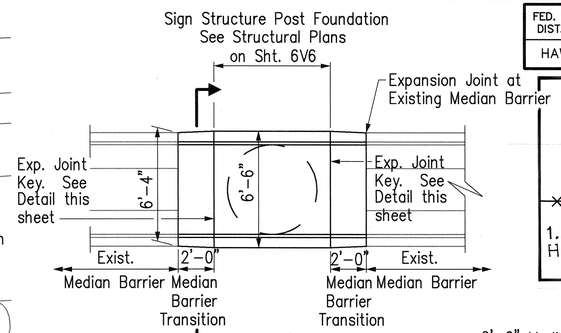

PLAN DETAIL A

Scale: ¼" = 1'-0"

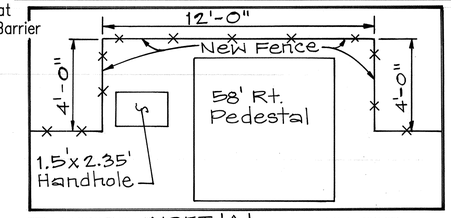

INSET 'A'

N.T.S.

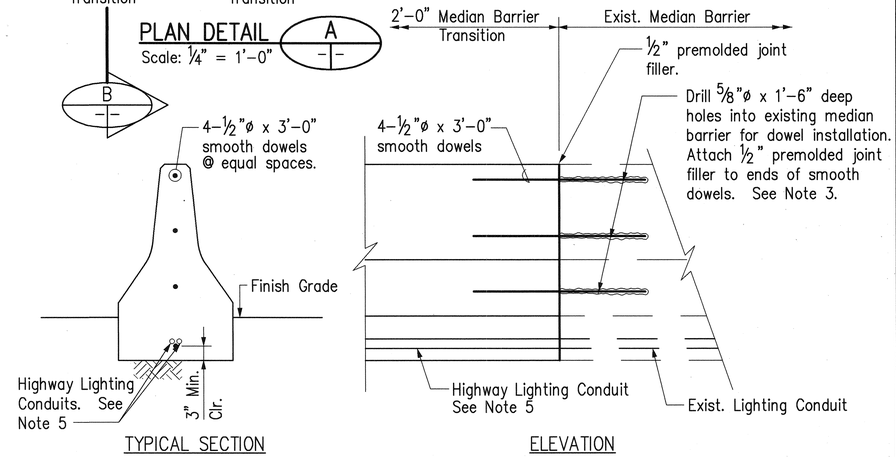

TYPICAL SECTION

ELEVATION

EXPANSION JOINT DETAIL @ EXISTING MEDIAN BARRIER

Scale: ½" = 1'-0"

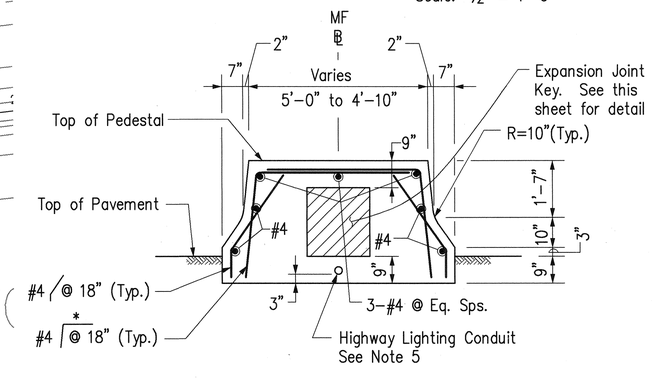

SECTION B

Scale: ½" = 1'-0"

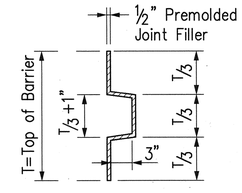

TOP VIEW

EXPANSION JOINT KEY

Not to Scale

NOTES:

1. Contractor to provide temporary AC walkway for pedestrians during construction. Temporary AC walkway to be removed and area grassed upon completion of sign structure. Payment shall be considered incidental to the Median Barrier Transition.
2. Contractor to verify sign structure span length prior to fabrication of sign structure.
3. The holes for dowels shall be drilled perpendicular to the existing concrete surfaces. When the drill contacts any existing rebar, the hole shall be filled with epoxy grout and a replacement shall be drilled so that the spacing of dowels will be maintained. Contractor shall avoid cutting existing rebar.
4. Contractor shall maintain highway lighting during construction. Payment shall be considered incidental to the Median Barrier Transition.
5. Highway Lighting Conduits and Cables shall be replaced within the Median Barrier Transitions. Conduits shall be 2"ø Galv. Steel to match exist. conduits.
6. Payment for Relocation of fence and highway lighting conduits and cables shall be considered incidental to the Median Barrier Transition.
7. See Expansion Joint Detail @ Existing Median Barrier this sheet. Expansion Joint occurs at each of the four (4) corners. Payment shall be considered incidental to the Median Barrier Transition.

MEDIAN BARRIER TRANSITION AT SIGN STRUCTURE MOANALUA FREEWAY OUTBOUND STA. 264+00

RANDALL M. URASAKI
LICENSED PROFESSIONAL ENGINEER
No. 7269-C
HAWAII, U.S.A.

THIS WORK WAS PREPARED BY ME OR UNDER MY SUPERVISION.

Date	Revision
5/2/97	Added sheet

STATE OF HAWAII
DEPARTMENT OF TRANSPORTATION
HIGHWAYS DIVISION

DESTINATION SIGNS ROADWAY CONSTRUCTION SIGN STRUCTURE E-58L&E-58R

H-3 FINISH (UNIT II)
FAIP NO. I-H3-1(75), UNIT II
LEEWARD SECTION

SCALE: AS SHOWN DATE: MAY 1997

SHEET NO. 6P12A OF 20 SHEETS

ADD. 862S-1

ORIGINAL PLAN | SURVEY PLOTTED BY | DRAWN BY | TRACED BY | DESIGNED BY | QUANTITIES BY | CHECKED BY | DATE
NOTE BOOK No.

CAD by L. Fujitani, 55-55

Last Saved: J:\H3RF\RFU2\SIGN\SS-E58.dwg 04/30/97 at 14:30

FED. ROAD DIST. NO.	STATE	FED. AID PROJ. NO.	FISCAL YEAR	SHEET NO.	TOTAL SHEETS
HAWAII	HAW.	I-H3-1(75), UNIT II	1997	ADD. 862S-2	1102

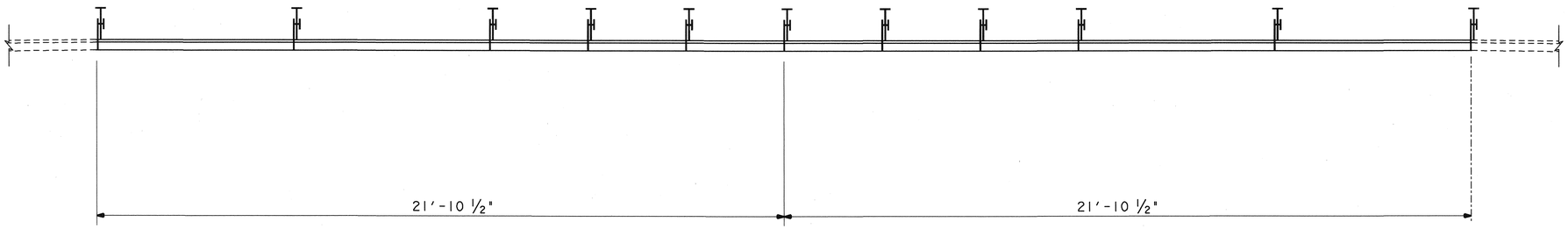

PLAN
Scale: 1/2" = 1'-0"

Moanalua Freeway
℄ Sta. 264+00
=℄ Sign Structure E-58L & E-58R Post

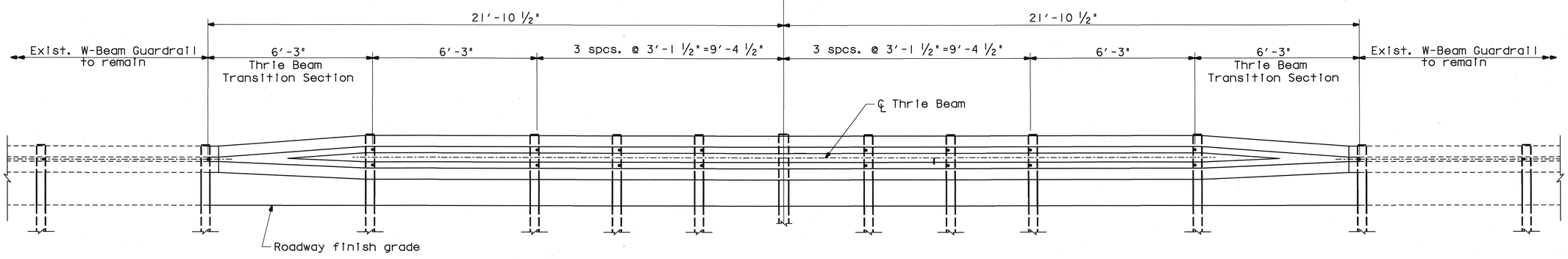

ELEVATION
Scale: 1/2" = 1'-0"

NOTE:

Payment for Thrie Beam Transition Section shall be paid for under Guardrail Type 3 - Thrie Beam.

GUARDRAIL TYPE 3 - THRIE BEAM AT SIGN STRUCTURE E-58L & E-58R

RANDALL M. URASAKI
LICENSED PROFESSIONAL ENGINEER
No. 7269-C
HAWAII, U.S.A.

THIS WORK WAS PREPARED BY ME OR UNDER MY SUPERVISION.

Date	Revision
5/2/97	Added sheet

STATE OF HAWAII
DEPARTMENT OF TRANSPORTATION
HIGHWAYS DIVISION

DESTINATION SIGNS
ROADWAY CONSTRUCTION DETAILS
SIGN STRUCTURE E-58I & E-58R

H-3 FINISH (UNIT I)
FAIP NO. I-H3-1(75), UNIT II
LEEWARD SECTION

SCALE: AS SHOWN DATE: MAY 1997

SHEET NO. 6P12B OF 20 SHEETS

ADD. 862S-2

ORIGINAL PLAN | SURVEY PLOTTED BY | DRAWN BY | TRACED BY | DESIGNED BY | QUANTITIES BY | CHECKED BY | DATE | NOTE BOOK No.

$$$$$$$$$$$$DGNSPEC$$$$$$$$$$ $$$$$$$$SYTIME$$$$$$$$

FED. ROAD DIST. NO.	STATE	FED. AID PROJ. NO.	FISCAL YEAR	SHEET NO.	TOTAL SHEETS
HAWAII	HAW.	I-H3-1(75), UNIT II	1997	863	1102

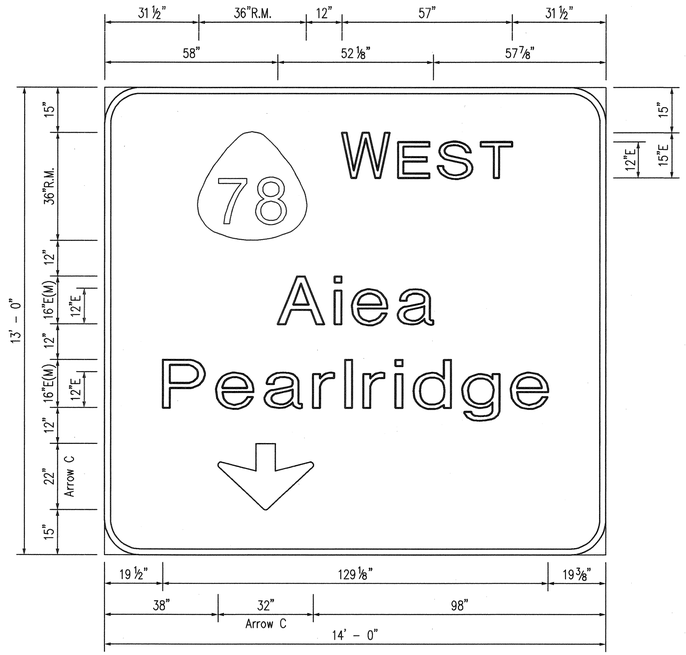

E-17L

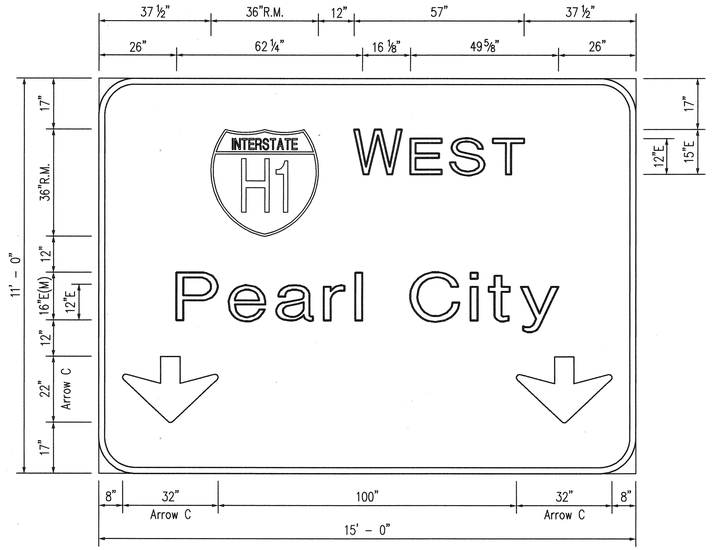

E-17C

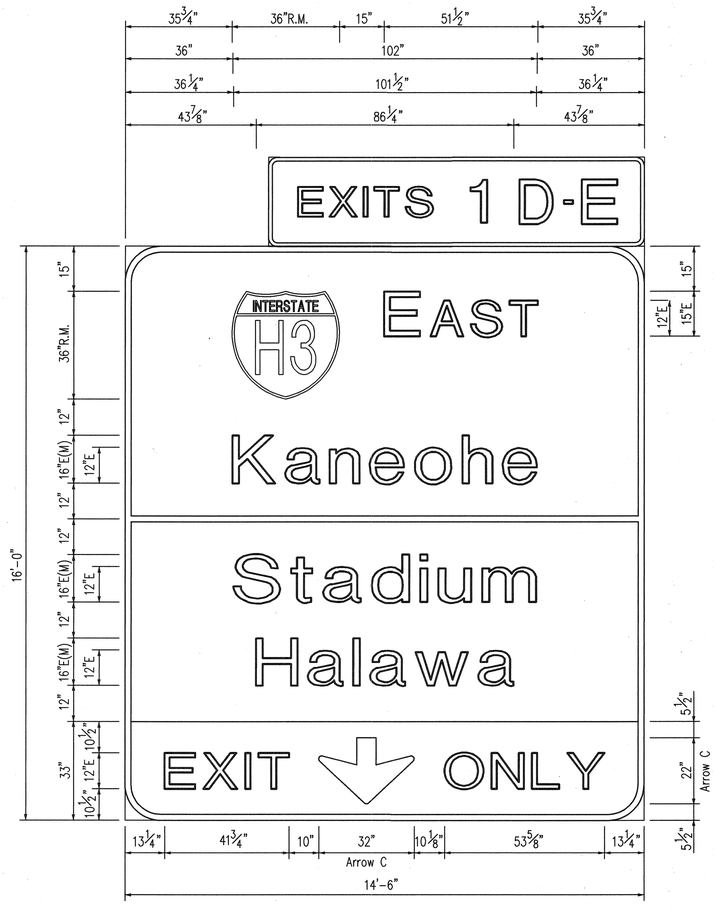

E-17R

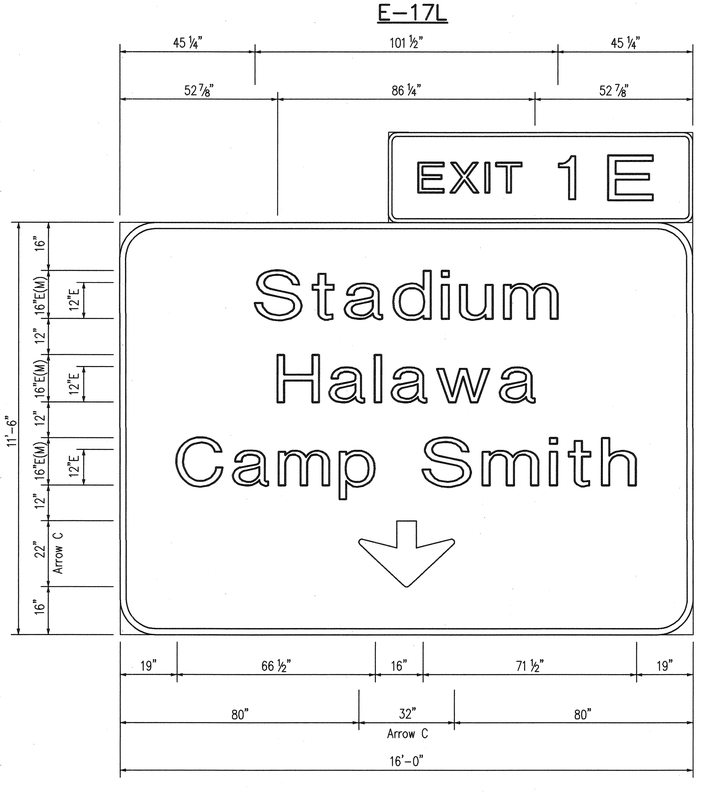

E-52L

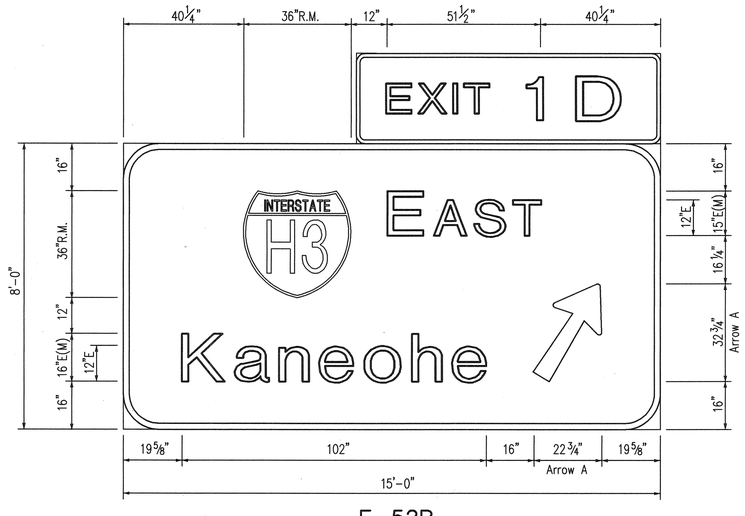

E-52R

RANDALL M. URASAKI
LICENSED PROFESSIONAL ENGINEER
No. 7269-C
HAWAII, U.S.A.

THIS WORK WAS PREPARED BY ME OR UNDER MY SUPERVISION.

STATE OF HAWAII
DEPARTMENT OF TRANSPORTATION
HIGHWAYS DIVISION

DESTINATION SIGNS
SIGN DETAILS
MOANALUA FREEWAY

H-3 FINISH (UNIT II)
FAIP NO. I-H3-1(75), UNIT II
LEEWARD SECTION

SCALE: 1/2" = 1'-0" DATE: JANUARY 1997

SHEET NO. 6P13 OF 20 SHEETS

ORIGINAL PLAN
SURVEY PLOTTED BY ____ DATE
DRAWN BY "
TRACED BY "
NOTE BOOK RECORDED BY "
QUANTITIES BY "
CHECKED BY "
No. ____

CAD by J. IWAKIRA 55-52

Last Saved: J:\H3RF\RFU2\SIGN\SD-MF2.dwg 02/24/97 at 08:22

FED. ROAD DIST. NO.	STATE	FED. AID PROJ. NO.	FISCAL YEAR	SHEET NO.	TOTAL SHEETS
HAWAII	HAW.	I-H3-1(75), UNIT II	1997	C.O. 864	1102

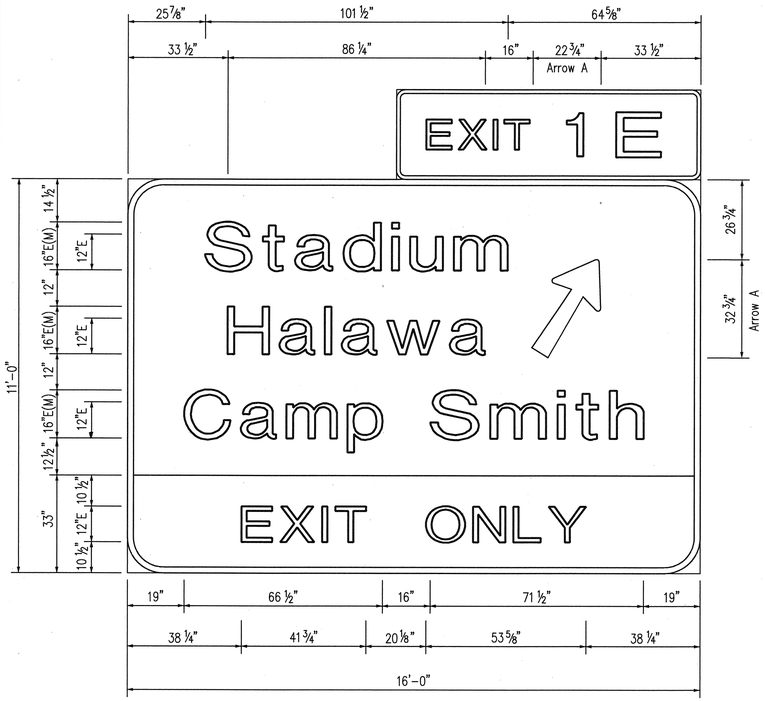

E-54L

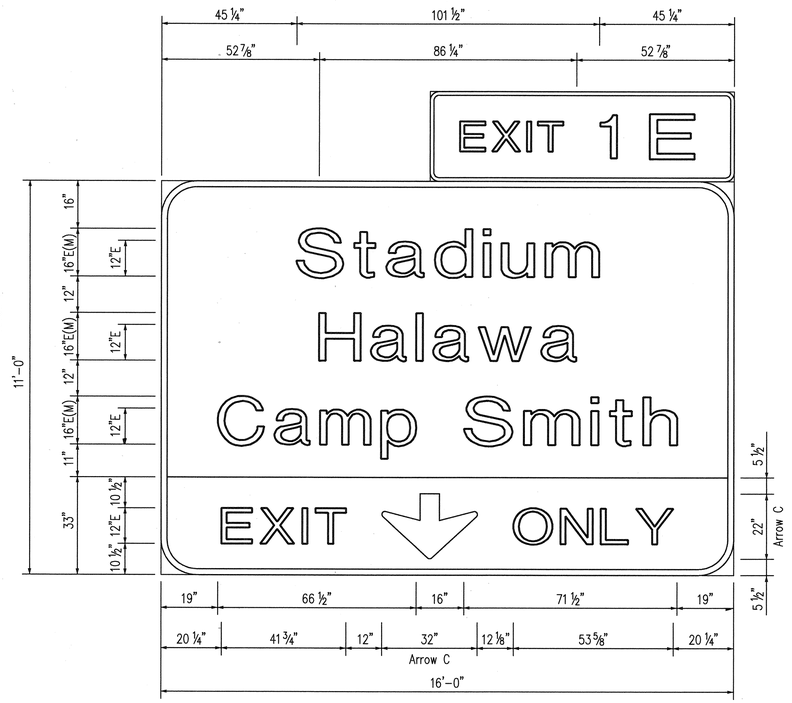

E-56L

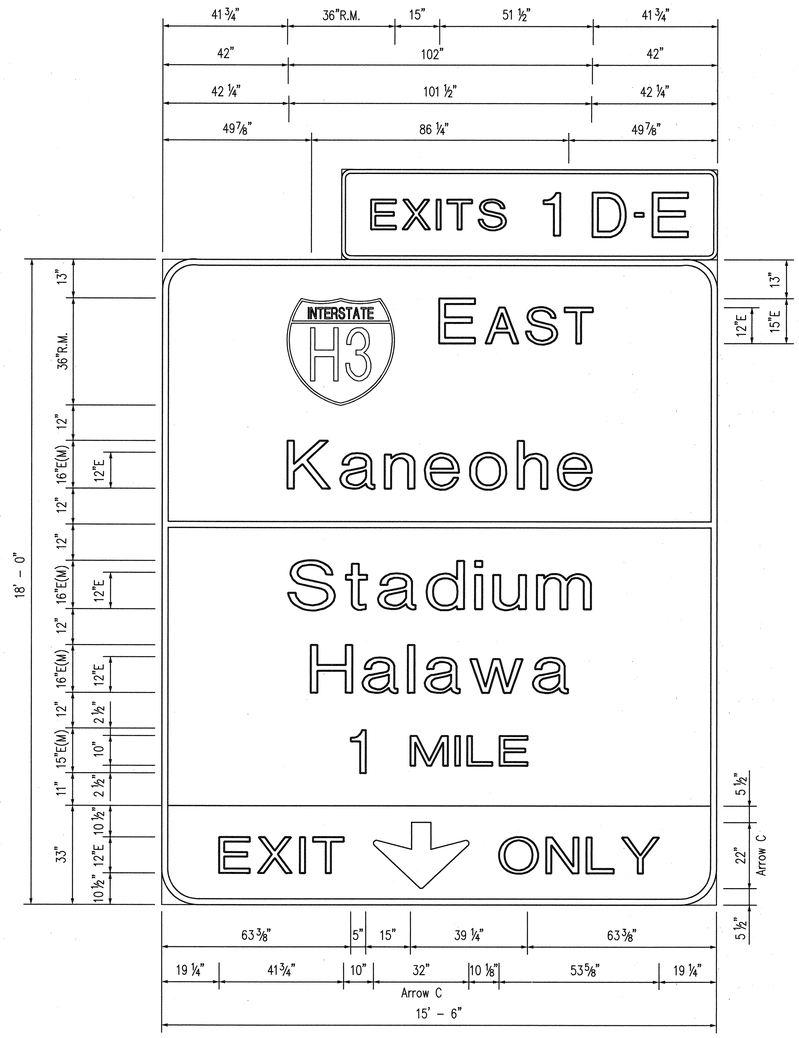

E-58L

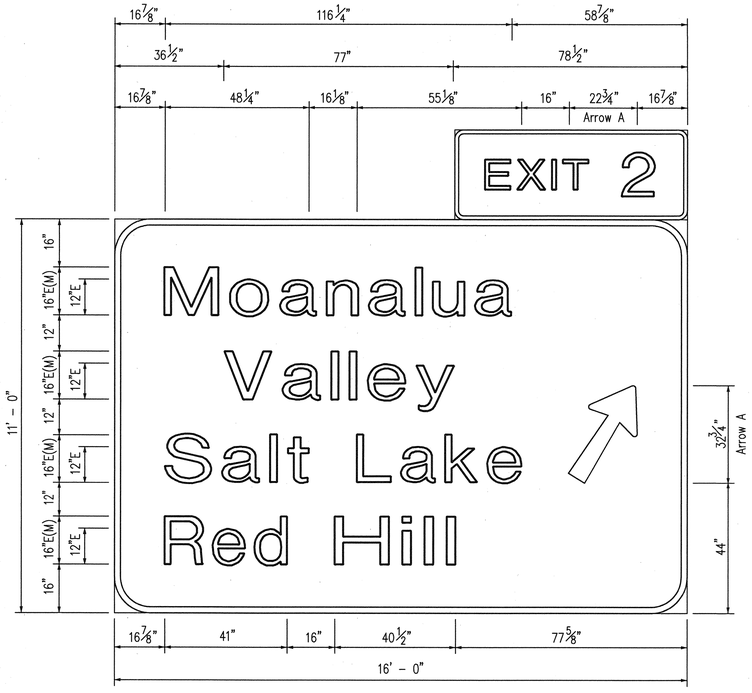

E-58R

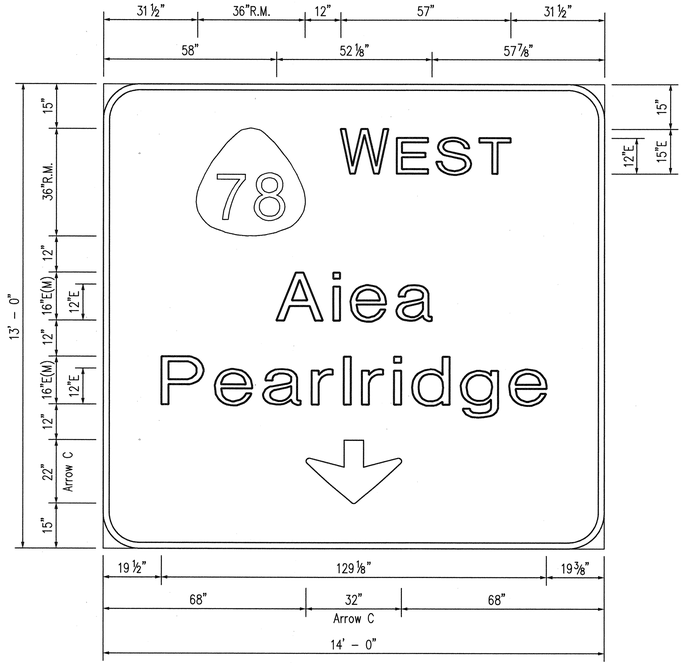

E-54LL

Date	Revision
5/22/98	Added Sign E-54LL

STATE OF HAWAII
DEPARTMENT OF TRANSPORTATION
HIGHWAYS DIVISION

DESTINATION SIGNS
SIGN DETAILS
MOANALUA FREEWAY

H-3 FINISH (UNIT II)
FAIP NO. I-H3-1(75), UNIT II
LEEWARD SECTION

SCALE: 1/2" = 1'-0" DATE: JANUARY 1997

RANDALL M. URASAKI
LICENSED PROFESSIONAL ENGINEER
No. 7269-C
HAWAII, U.S.A.

THIS WORK WAS PREPARED BY ME OR UNDER MY SUPERVISION.

ORIGINAL PLAN	SURVEY PLOTTED BY	DATE
	DRAWN BY	
NOTE BOOK	TRACED BY	
	DESIGNED BY	
	QUANTITIES BY	
No.	CHECKED BY	

CAD by J. Minami, 55-52

Last Saved: J:\H3RF\RFU2\CO\SIGN\Co-mf1.dwg.dwg 06/02/98 at 08:20

FED. ROAD DIST. NO.	STATE	FED. AID PROJ. NO.	FISCAL YEAR	SHEET NO.	TOTAL SHEETS
HAWAII	HAW.	I-H3-1(75), UNIT II	1997	865	1102

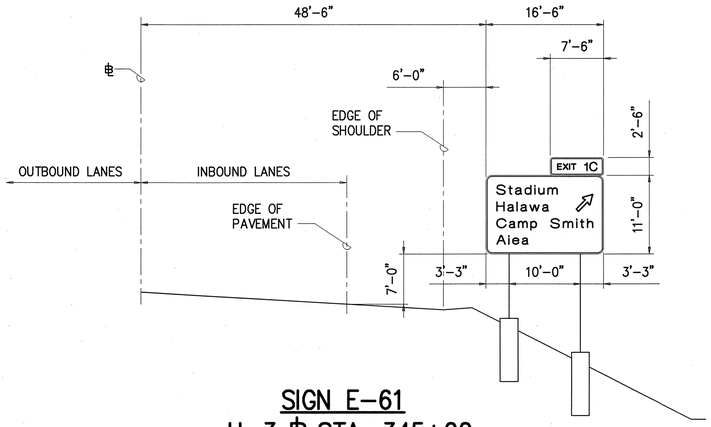

SIGN E-61
H-3 ℄ STA. 345+00

SCALE: 1" = 10'-0"

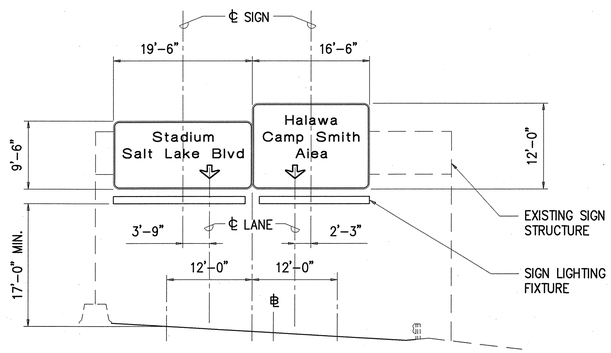

SIGN E-62
RAMP M ℄ STA. 19+33

SCALE: 1" = 10'-0"

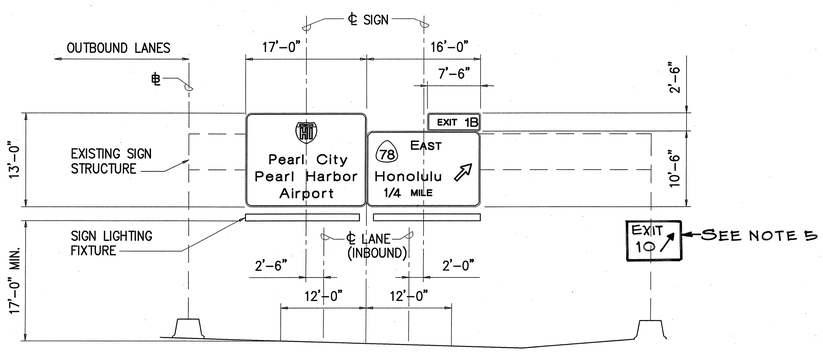

SIGN E-63
H-3 ℄ STA. 336+90

SCALE: 1" = 10'-0"

GENERAL SIGN NOTES

1. ALL LETTERS, NUMERALS, AND SYMBOLS SHALL CONFORM TO THE LATEST FHWA PUBLICATIONS:
   a. "MANUAL ON UNIFORM TRAFFIC CONTROL DEVICES FOR STREETS AND HIGHWAYS", AND AS AMENDED.
   b. "STANDARD ALPHABETS FOR HIGHWAY SIGNS", AND AS AMENDED.
   c. "STANDARD HIGHWAY SIGNS", AND AS AMENDED.
2. LETTERS, NUMERALS, SYMBOLS, AND BORDERS SHALL BE DEMOUNTABLE ALUMINUM CUT-OUTS WITH WHITE REFLECTIVE SHEETING OR CLEAR REFLEX REFLECTORS AND SHALL BE FASTENED ON THE SIGN PANEL WITH BLIND RIVETS. BACKGROUND FOR THE SIGNS SHALL BE GREEN PORCELAIN ENAMEL.
3. SIGN PANELS SHALL BE LAMINATED ALUMINUM OR SOLID ALUMINUM EXTRUDED.
4. SIGN E-61 SHALL BE GROUND MOUNTED. SEE STANDARD PLAN TE-23 FOR DETAILS.
5. SIGN D-1 SHALL BE ~~GROUND MOUNTED. SEE STANDARD PLAN TE-02 FOR DETAILS.~~ MOUNTED ON THE RIGHT POST OF SIGN STRUCTURE E-63 AT A HEIGHT OF 7'-0" ABOVE PAVEMENT ELEVATION.
6. SIGNS E-61 AND D-1 SHALL NOT BE ILLUMINATED.

ORIGINAL PLAN		
	SURVEY PLOTTED BY	DATE
	DRAWN BY	
	TRACED BY	
NOTE BOOK	DESIGNED BY	
	QUANTITIES BY	
No.	CHECKED BY	

RONALD M. UEMURA LICENSED PROFESSIONAL ENGINEER NO. 4441-C HAWAII, USA

1/14/97

This work was prepared by me or under my supervision.

STATE OF HAWAII
DEPARTMENT OF TRANSPORTATION
HIGHWAYS DIVISION

SIGNING & PAVEMENT MARKINGS
SIGN LAYOUTS
MAKAI QUARRY VIADUCT

H-3 FINISH (UNIT II)
FAIP NO. I-H3-1(75), UNIT II
LEEWARD SECTION

SCALE: AS NOTED DATE: JAN. 1997

SHEET No. 6P15 OF 20 SHEETS

R:\89047\89047D03 01/30/97 16:12 LO

FED. ROAD DIST. NO.	STATE	FED. AID PROJ. NO.	FISCAL YEAR	SHEET NO.	TOTAL SHEETS
HAWAII	HAW.	I-H3-1(75), UNIT II	1997	866	1102

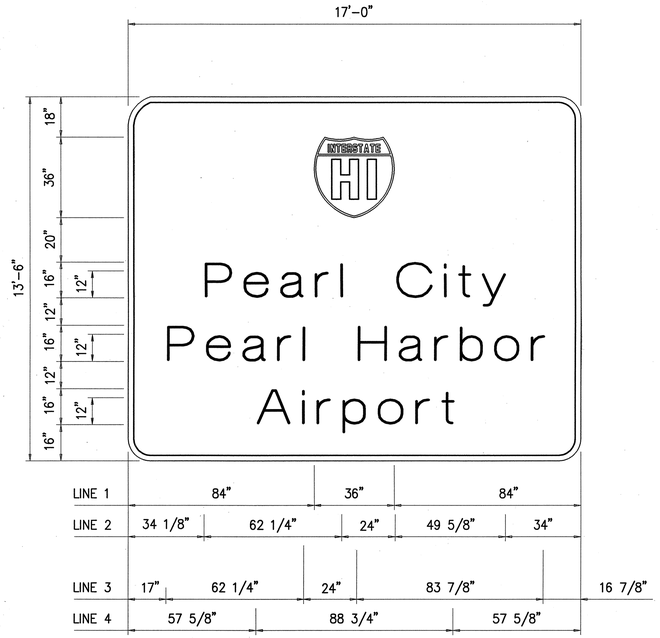

SIGN E-60L
SCALE: 3/8" = 1'-0"

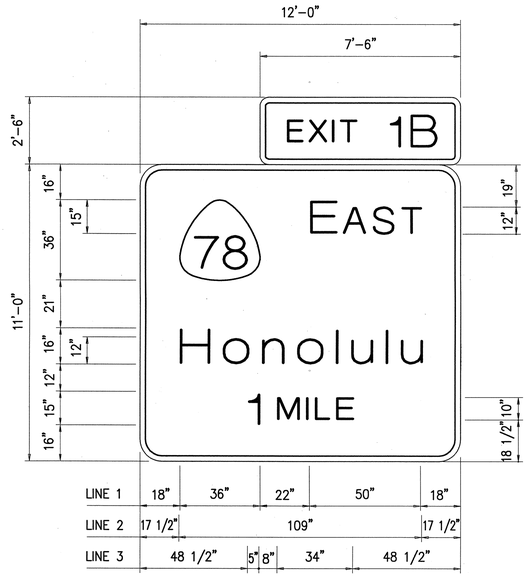

SIGN E-60C
SCALE: 3/8" = 1'-0"

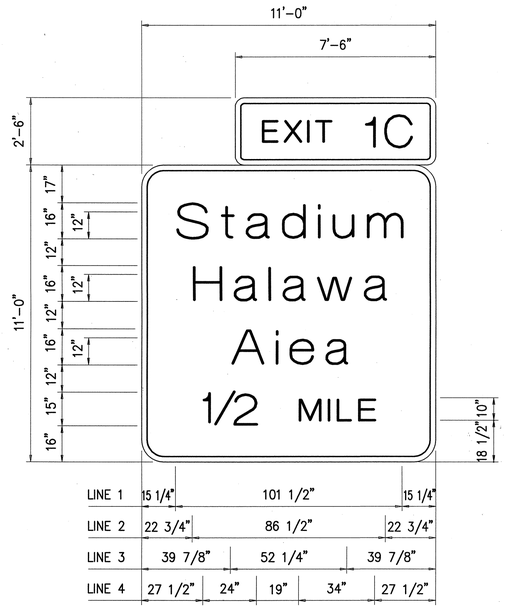

SIGN E-60R
SCALE: 3/8" = 1'-0"

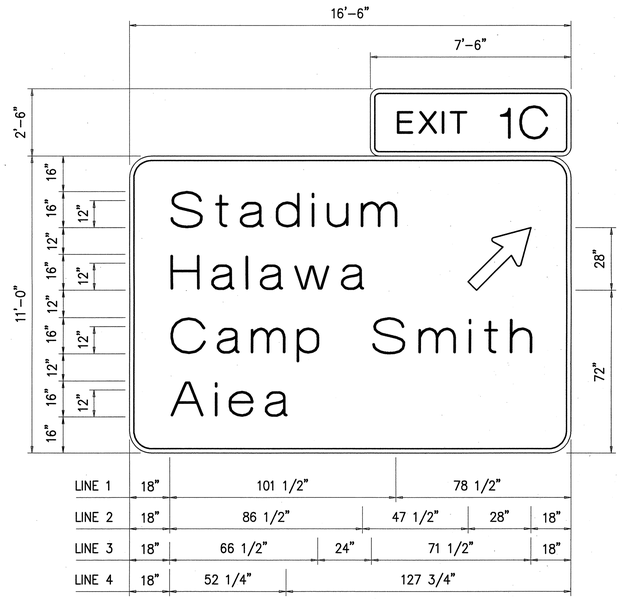

SIGN E-61
SCALE: 3/8" = 1'-0"

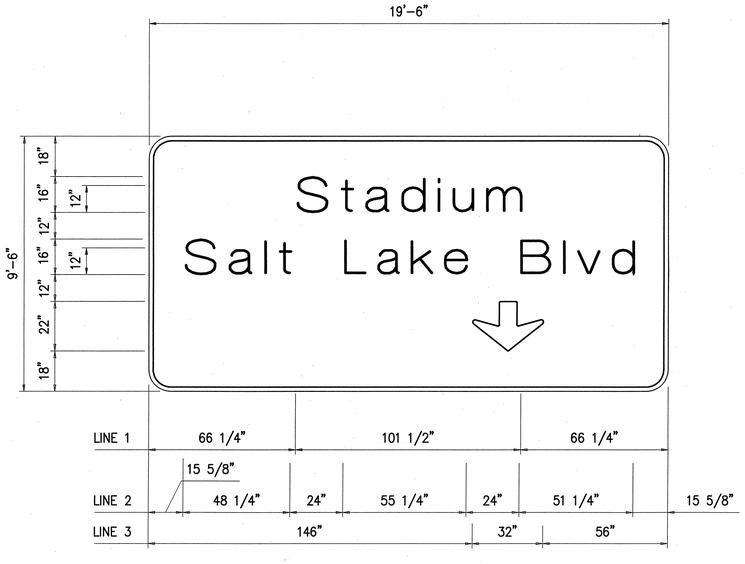

SIGN E-62L
SCALE: 3/8" = 1'-0"

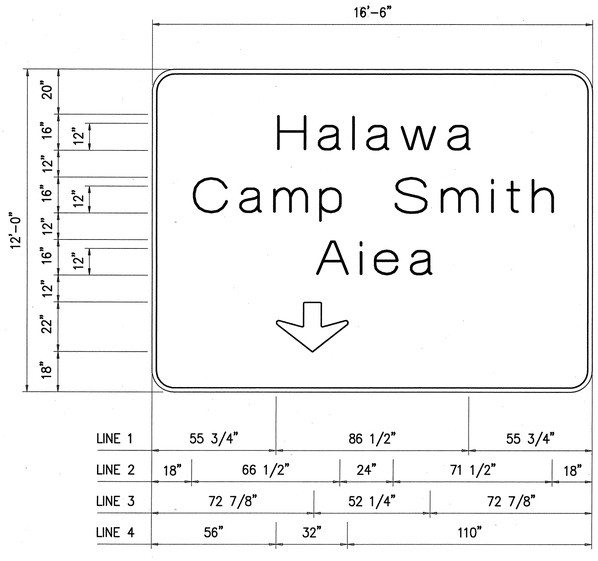

SIGN E-62R
SCALE: 3/8" = 1'-0"

ORIGINAL PLAN	SURVEY PLOTTED BY	DATE
	DRAWN BY	
	TRACED BY	
NOTE BOOK	DESIGNED BY	
	QUANTITIES BY	
No.	CHECKED BY	

R:\89047\89047D01 01/29/97 16:05 LO

RONALD M. UEMURA
LICENSED PROFESSIONAL ENGINEER
NO. 4441-C
HAWAII, USA

1/29/97

This work was prepared by me or under my supervision.

STATE OF HAWAII
DEPARTMENT OF TRANSPORTATION
HIGHWAYS DIVISION

SIGNING & PAVEMENT MARKINGS
SIGN DETAILS
MAKAI QUARRY VIADUCT

H-3 FINISH (UNIT II)
FAIP NO. I-H3-1(75), UNIT II
LEEWARD SECTION

SCALE: AS NOTED DATE: JAN. 1997

SHEET No. 6P16 OF 20 SHEETS

FED. ROAD DIST. NO.	STATE	FED. AID PROJ. NO.	FISCAL YEAR	SHEET NO.	TOTAL SHEETS
HAWAII	HAW.	I-H3-1(75), UNIT II	1997	867	1102

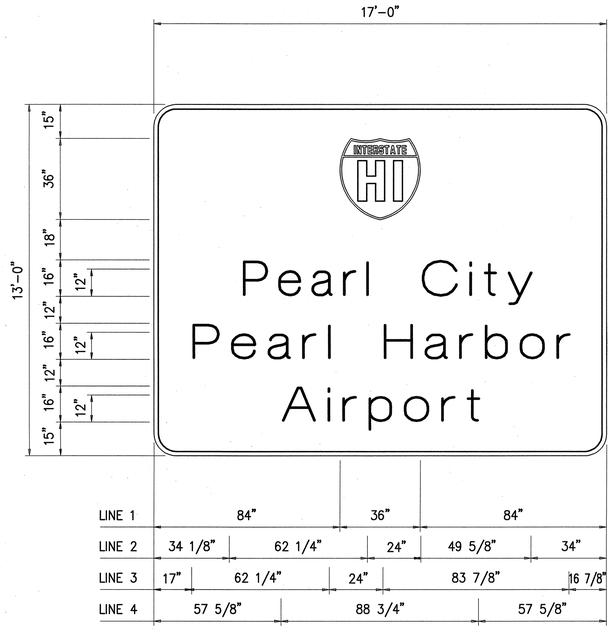

SIGN E-63L
SCALE: 3/8" = 1'-0"

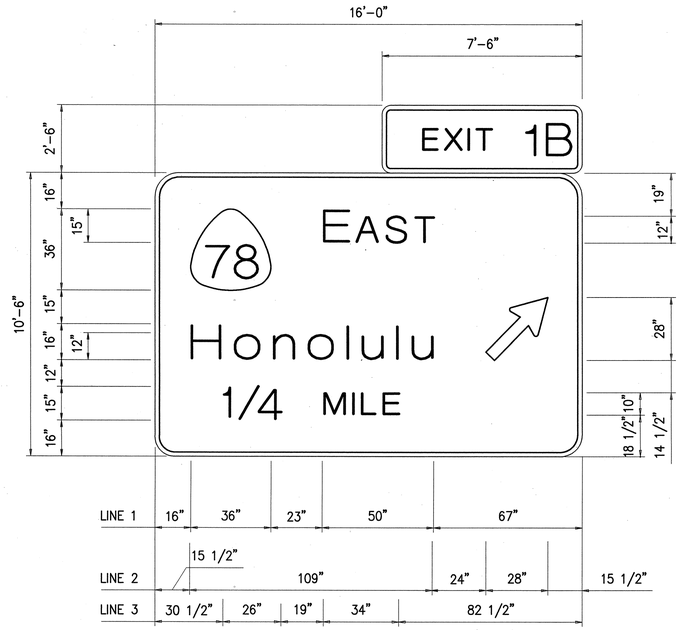

SIGN E-63R
SCALE: 3/8" = 1'-0"

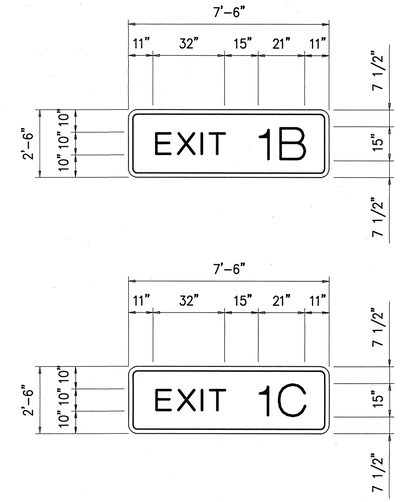

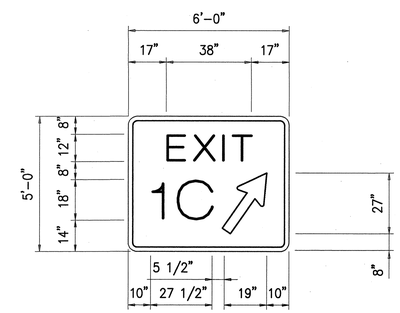

SIGN D-1
SCALE: 3/8" = 1'-0"

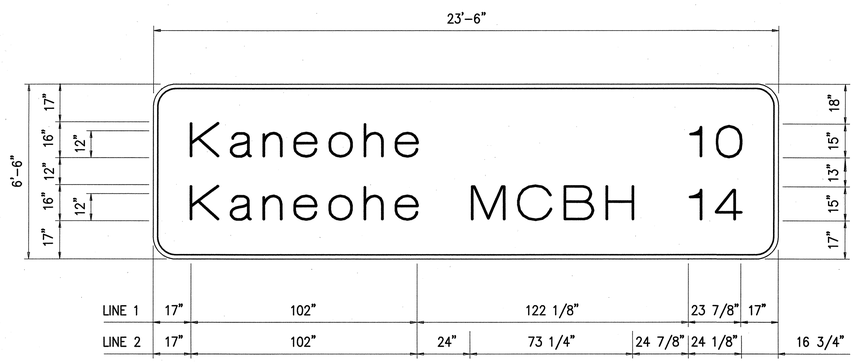

SIGN E-64
SCALE: 3/8" = 1'-0"

ORIGINAL PLAN		
	SURVEY PLOTTED BY	DATE
	DRAWN BY	
	TRACED BY	
NOTE BOOK	DESIGNED BY	
	QUANTITIES BY	
No.	CHECKED BY	

R:\89047\89047D02 01/30/97 16:19 LO

RONALD M. UBEMURA
LICENSED PROFESSIONAL ENGINEER
NO. 4441-C
HAWAII, USA

1/29/97

This work was prepared by me or under my supervision.

STATE OF HAWAII
DEPARTMENT OF TRANSPORTATION
HIGHWAYS DIVISION

SIGNING & PAVEMENT MARKINGS
SIGN DETAILS
MAKAI QUARRY VIADUCT

H-3 FINISH (UNIT II)
FAIP NO. I-H3-1(75), UNIT II
LEEWARD SECTION

SCALE: AS NOTED DATE: JAN. 1997

SHEET No. 6P17 OF 20 SHEETS

FED. ROAD DIST. NO.	STATE	FED. AID PROJ. NO.	FISCAL YEAR	SHEET NO.	TOTAL SHEETS
HAWAII	HAW.	I-H3-1(75), UNIT II	1997	868	1102

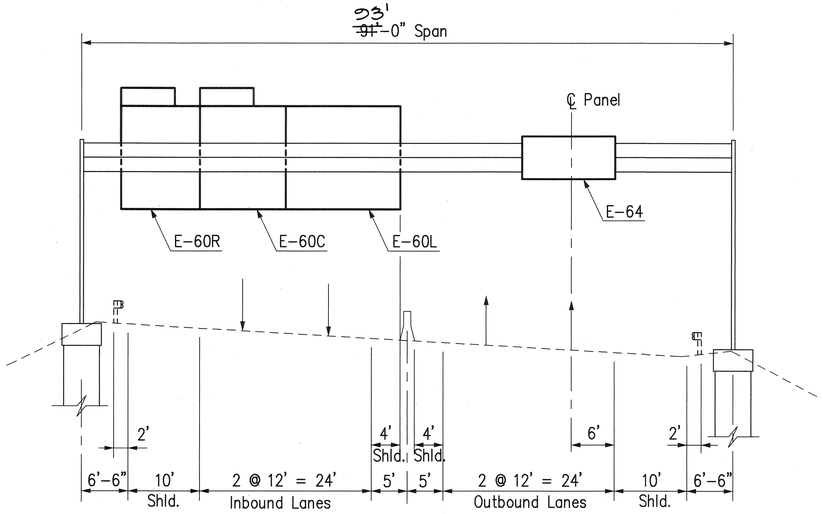

NOTE:
Signs E-60R, E-60C, & E-60L install in direction of traffic. See Structural Plans.

SIGN LAYOUT E-60L, E-60C, E-60R & E-64

Interstate Route H-3 ℄ Sta. 374+75

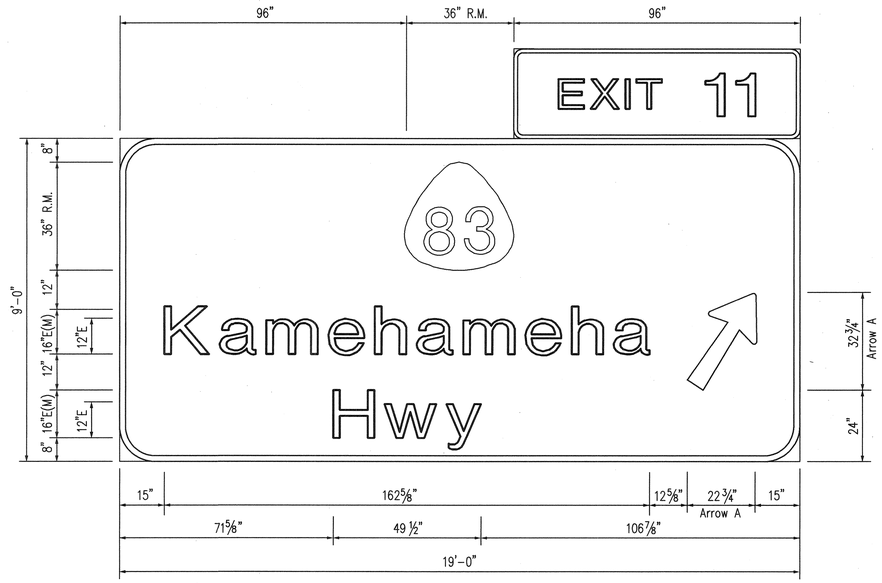

E-76R

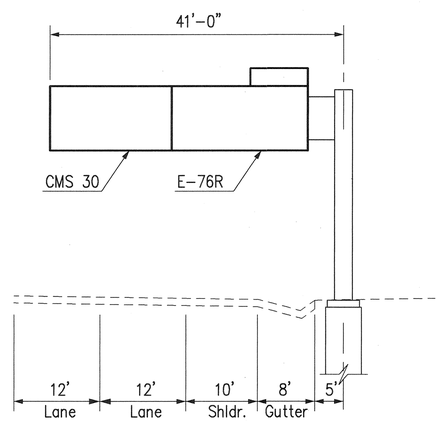

SIGN LAYOUT CMS30 & E-76R

Interstate Route H-3 Inbound Sta. 522+55

RANDALL M. URASAKI
LICENSED PROFESSIONAL ENGINEER
No. 7269-C
HAWAII, U.S.A.

THIS WORK WAS PREPARED BY ME OR UNDER MY SUPERVISION.

STATE OF HAWAII
DEPARTMENT OF TRANSPORTATION
HIGHWAYS DIVISION

DESTINATION SIGNS
SIGN LAYOUTS & DETAILS
QUARRY VIA. & HALEKOU I/C

H-3 FINISH (UNIT II)
FAIP NO. I-H3-1(75), UNIT II
LEEWARD SECTION

SCALE: 1" = 10' DATE: JANUARY 1997

SHEET NO. 6P18 OF 20 SHEETS

868

ORIGINAL PLAN | SURVEY PLOTTED BY | DATE
DRAWN BY
TRACED BY
NOTE BOOK | DESIGNED BY
QUANTITIES BY
No. | CHECKED BY

CAD by: J. MIMURA, 55-52

Last Saved: J:\H3RF\RFU2\SIGN\H3-SD1.dwg 02/24/97 at 08:27

FED. ROAD DIST. NO.	STATE	FED. AID PROJ. NO.	FISCAL YEAR	SHEET NO.	TOTAL SHEETS
HAWAII	HAW.	I-H3-1(75), UNIT II	1997	869	1102

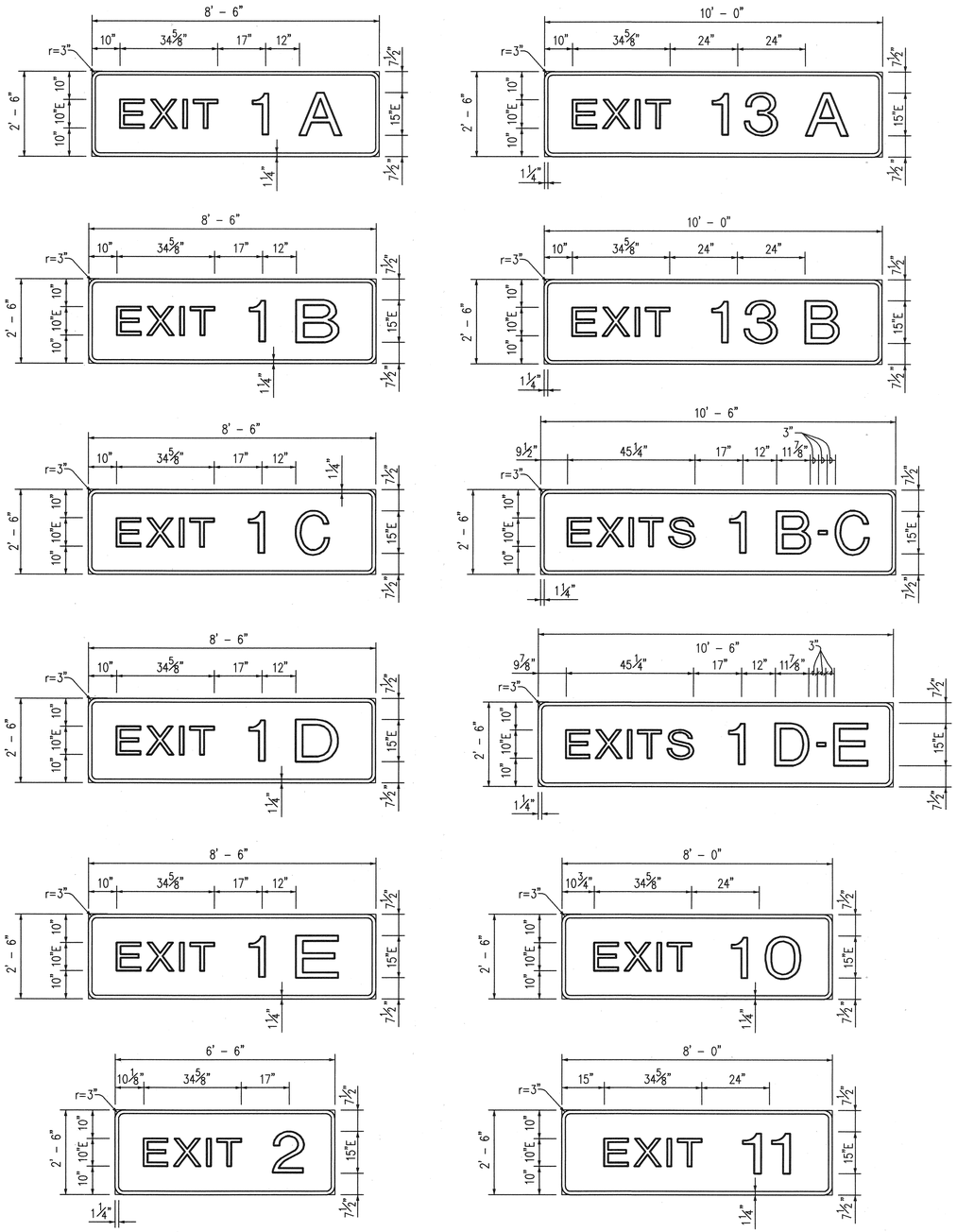

EXIT PANEL DETAILS

Scale: 1/2" = 1'-0"

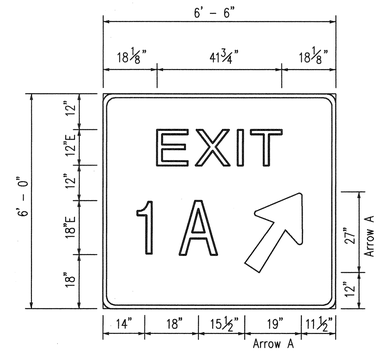

D-1A

Scale: 1/2" = 1'-0"

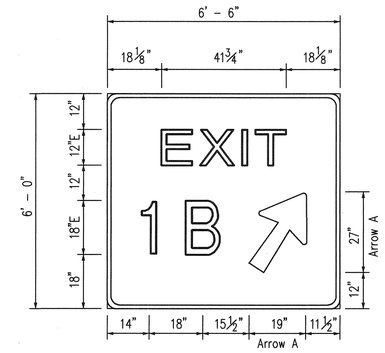

D-1B

Scale: 1/2" = 1'-0"

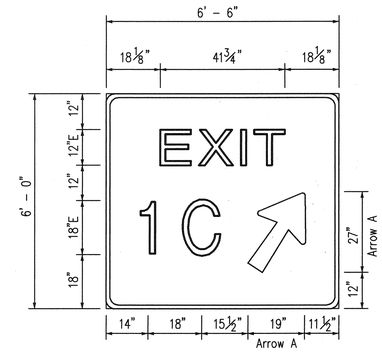

D-1C

Scale: 1/2" = 1'-0"

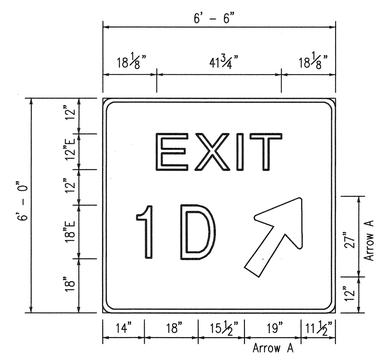

D-1D

Scale: 1/2" = 1'-0"

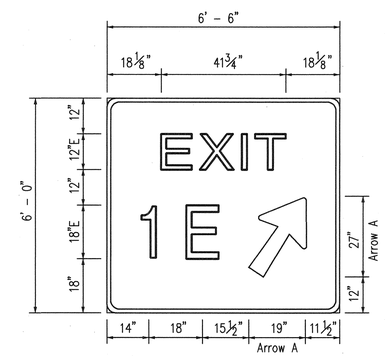

D-1E

Scale: 1/2" = 1'-0"

RANDALL M. URASAKI
LICENSED PROFESSIONAL ENGINEER
No. 7269-C
HAWAII, U.S.A.

THIS WORK WAS PREPARED BY ME OR UNDER MY SUPERVISION.

STATE OF HAWAII
DEPARTMENT OF TRANSPORTATION
HIGHWAYS DIVISION

DESTINATION SIGNS
SIGN DETAILS
MISCELLANEOUS

H-3 FINISH (UNIT II)
FAIP NO. I-H3-1(75), UNIT II
LEEWARD SECTION

SCALE: AS SHOWN DATE: JANUARY 1997

SHEET NO. 6P19 OF 20 SHEETS

869

ORIGINAL PLAN
NOTE BOOK No. ___
SURVEY PLOTTED BY ___ DATE
DRAWN BY "
TRACED BY "
DESIGNED BY "
QUANTITIES BY "
CHECKED BY "

CAD by J. MINURA, 55-52

Last Saved: J:\H3RF\RFU2\SIGN\SD-EXIT.dwg 02/24/97 at 08:28

FED. ROAD DIST. NO.	STATE	FED. AID PROJ. NO.	FISCAL YEAR	SHEET NO.	TOTAL SHEETS
HAWAII	HAW.	I-H3-1(75), UNIT II	1997	870	1102

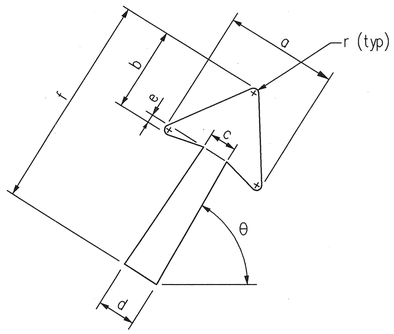

SIGN	ARROW A – DIMENSIONS							
	Inches							Degrees
	a	b	c	d	e	f	r	θ
D-1A D-1B D-1C D-1D D-1E	18 1/4	14	4 1/2	6	1 1/2	29 1/4	3/4	60
E-8C E-8R E-33R E-37R E-39R E-52R E-54L E-58R	22 1/4	17	5 3/8	7 1/8	1 3/4	35 5/8	1	60
E-2 E-50R	22 1/4	17	5 3/8	7 1/8	1 3/4	35 5/8	1	45
E-27R	22 1/4	17	5 3/8	7 1/8	1 3/4	48	1	0

ARROW A
N.T.S.

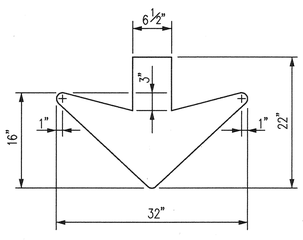

ARROW C
N.T.S.

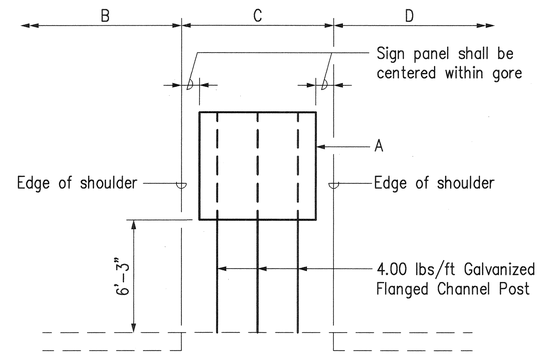

SIGN LAYOUT D-1A, D-1B, D-1C, D-1D & D-1E

NOTES FOR 'D' SIGNS:

1. For dimensions not shown, see Standard Plan TE-02.
2. Sign Layout shown in direction of traffic.

RANDALL M. URASAKI
LICENSED PROFESSIONAL ENGINEER
No. 7269-C
HAWAII, U.S.A.

THIS WORK WAS PREPARED BY ME OR UNDER MY SUPERVISION.

STATE OF HAWAII
DEPARTMENT OF TRANSPORTATION
HIGHWAYS DIVISION

DESTINATION SIGNS
SIGN DETAILS & SIGN LAYOUT
MISCELLANEOUS

H-3 FINISH (UNIT II)
FAIP NO. I-H3-1(75), UNIT II
LEEWARD SECTION

SCALE: 1/4" = 1'-0" DATE: JANUARY 1997

SHEET NO. 6P20 OF 20 SHEETS

ORIGINAL PLAN | SURVEY PLOTTED BY | DRAWN BY | TRACED BY | DESIGNED BY | QUANTITIES BY | CHECKED BY | DATE
NOTE BOOK No.

CAD by J. MINURA, 55-52

Last Saved: J:\H3RF\RFU2\SIGN\SL0-H1W2.dwg 02/24/97 at 08:29

FED. ROAD DIST. NO.	STATE	FED. AID PROJ. NO.	FISCAL YEAR	SHEET NO.	TOTAL SHEETS
HAWAII	HAW.	I-H3-1(75), UNIT II	1997	871	1102

1. DESIGN SPECIFICATIONS:

AASHTO Standard Specifications for Structural Supports for Highway Signs, Luminaires and Traffic Signals, 1994 Edition.

2. DESIGN DATA:

WIND LOADING: Design wind speed = 80 mph. For wind load normal to face of sign and transverse to face of sign, see Design Specifications.

ICE LOAD: None.

STRUCTURAL STEEL: ASTM A36.

HIGH STRENGTH BOLTS: ASTM A325 (Friction – Type Connection).

ALUMINUM MEMBERS: Aluminum Alloy 6061-T6.

STEEL PIPE: ASTM A53 Type E Grade B

3. WELDING:

All welding to be continuous welds and as noted on the plans. All welding shall conform to the requirements of ANSI/AASHTO/AWS D1.5-88, "Bridge Welding Code".

4. MATERIALS:

A. Galvanized surfaces of overhead sign support structures shall be painted to dark green color. See Specifications.

B. Contact surfaces in high strength (H.S.) bolt connections shall not be painted. The galvanizing on these surfaces shall be lightly scored by wire brushing prior to assembly.

C. High strength bolts shall be galvanized, furnished and installed in conformance with current ASTM A325 with lubricated nuts.

D. Leveling grout shall be non-shrink and non-metallic.

E. Anchor bolts to be ASTM A449 galvanized.

F. Aluminum members and surfaces in contact with structural steel shall be 1/16" thick neoprene sheet.

5. CONSTRUCTION METHOD:

See Hawaii Standard Specifications for road and bridge construction, 1994 Edition, AASHTO Standard Specifications for structural supports for Highway Signs, Luminaires and Traffic Signals, current Edition and Special Provisions for this project.

6. GENERAL:

A. Prior to fabrication of the sign support structures, the Contractor shall verify in the field the exact location of each of the anchor bolts installed and the post elevation at the top of the supporting concrete.

B. Payment for the overhead sign support structures, sign panel mounting brackets and modifications of the existing sign support structures shall be made as described in the Special Provisions.

C. All sign support structures are viewed in the direction of traffic, unless noted otherwise.

D. The Contractor shall probe to locate the existing utilities and shall notify the respective owners prior to commencing with foundation work.

7. LEGEND AND ABBREVIATIONS:

&	And	Lt.	Left
@	At	Max.	Maximum
Alum.	Aluminum	Min.	Minimum
℄	Baseline	O.C.	On center
Bot.	Bottom	O.D.	Outside diameter
Brg.	Bearing	Opng.	Opening
℄	Centerline	o/s	Offset
Cl, Clr.	Clear	ℙ	Plate
CM	Changeable message	Pt	Point of tangent
CMS	Changeable message sign	Pvmt.	Pavement
Conc.	Concrete	Rect.	Rectangular
Conn.	Connection	Reloc.	Relocated
Cont.	Continuous	Req'd.	Required
Dia.	Diameter	Rt.	Right
Diag.	Diagonal	Sect.	Section
E.F.	Each face	Sht.	Sheet
Eq.	Equal	S.S.	Stainless Steel
Eq. Spc.	Equal spaces	Std.	Standard
Exist.	Existing	Stiff.	Stiffener
Flex.	Flexible	Symm.	Symmetrical
FM	Fixed message	t, Thk.	Thick
FMS	Fixed message sign	Typ.	Typical
Galv.	Galvanized	Ult.	Ultimate
Gr.	Ground	Vert.	Vertical
H.S.	High strength	VMS	Variable message sign
I.B.	Inbound	WP	Weatherproof
Jt.	Joint	w/	With

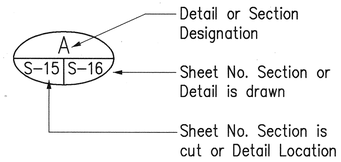

8. FOUNDATION:

Use 5'-0" diameter Drilled Shafts. For Details see Sht. Nos. 6V6 and 6V7.

ORIGINAL PLAN | SURVEY PLOTTED BY | DRAWN BY | TRACED BY | DESIGNED BY | QUANTITIES BY | CHECKED BY | DATE
NOTE BOOK No.

CAD by D. Burgess. 55-52

HUI PANG CHEN
LICENSED PROFESSIONAL ENGINEER
No. 3865-S
HAWAII, U.S.A.

THIS WORK WAS PREPARED BY ME OR UNDER MY SUPERVISION.

STATE OF HAWAII
DEPARTMENT OF TRANSPORTATION
HIGHWAYS DIVISION

DESTINATION SIGNS
SIGN STRUCTURES
GENERAL NOTES

H-3 FINISH (UNIT II)
FAIP NO. I-H3-1(75), UNIT II
LEEWARD SECTION

SCALE: NONE DATE: JANUARY 1997

SHEET NO. 6V1 OF 14 SHEETS

Last Saved: J:\H3RF\RFU2\SIGN\SS-NOTE3.dwg 03/02/97 at 13:23

FED. ROAD DIST. NO.	STATE	FED. AID PROJ. NO.	FISCAL YEAR	SHEET NO.	TOTAL SHEETS
HAWAII	HAW.	I-H3-1(75), UNIT II	1997	872	1102

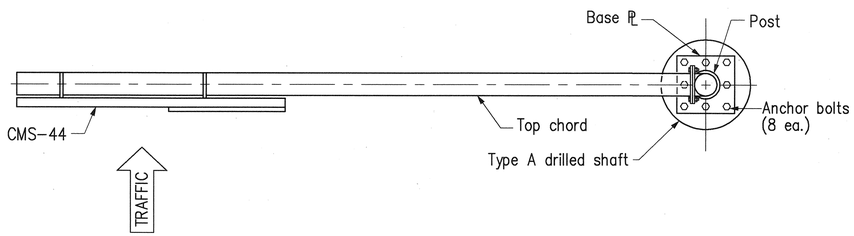

PLAN – CANTILEVER SIGN STRUCTURE CMS-44

Not to Scale

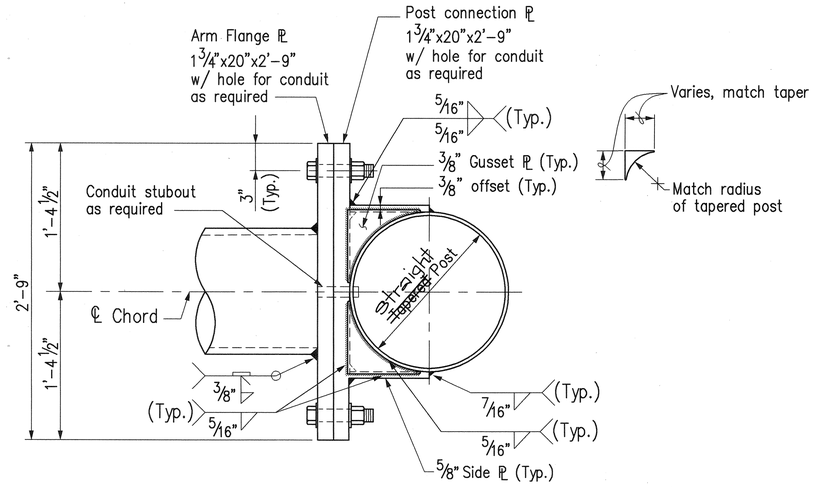

SECTION C
Scale : 1½" = 1'-0"

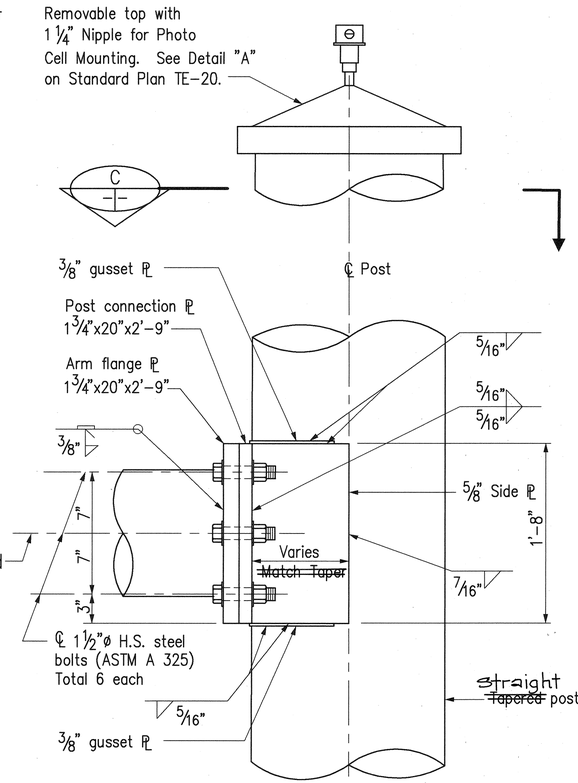

POST ELEVATION – SIGN STRUCTURE CMS-44

Scale : 1½" = 1'-0"

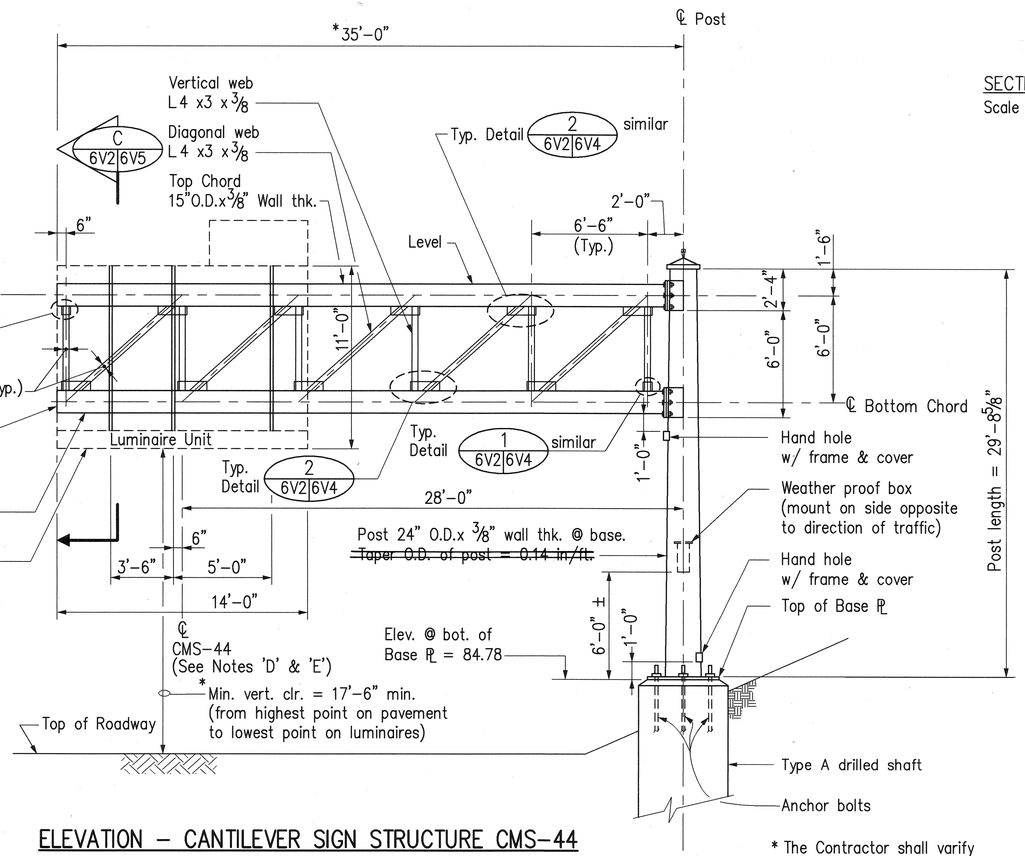

ELEVATION – CANTILEVER SIGN STRUCTURE CMS-44

MOANALUA FREEWAY INBOUND STA. 181+00
Not To Scale

* The Contractor shall varify the dimensions in field prior to fabrication of structure.

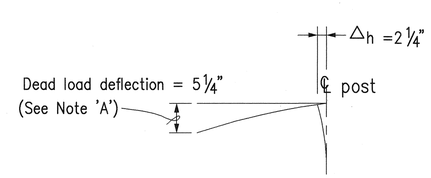

DEAD LOAD DEFLECTIONS FOR SIGN STRUCTURE CMS-44

Not To Scale

NOTES:

A. The dead load deflection includes the effect of the weight of the truss. A camber shall be provided to accommodate this deflection.

B. Provide conduit stubouts in bottom chord for luminaire wiring as required. At these locations, place handholes on bottom side of chord 1'-0" from hole.

C. For sign structure notes, see Sht. No. 6V1.

D. CMS 44 panel is State-Furnished. For assembly and mounting details, see Sht. No. SY-98.

E. The Contractor shall furnish and install mounting bracket as shown on this sheet and Sht. No. 6V5 for CMS 44.

HUI PANG CHEN
LICENSED PROFESSIONAL ENGINEER
No. 3865-S
HAWAII, U.S.A.

THIS WORK WAS PREPARED BY ME OR UNDER MY SUPERVISION.

Hui Pang Chen

STATE OF HAWAII
DEPARTMENT OF TRANSPORTATION
HIGHWAYS DIVISION

DESTINATION SIGNS
SIGN STRUCTURES
CANTILEVER TYPE

H-3 FINISH (UNIT II)
FAIP NO. I-H3-1(75), UNIT II
LEEWARD SECTION

SCALE: AS SHOWN DATE: JANUARY 1997

SHEET NO. 6V2 OF 14 SHEETS

872

ORIGINAL PLAN | SURVEY PLOTTED BY | DRAWN BY | TRACED BY | DESIGNED BY | QUANTITIES BY | CHECKED BY | DATE
NOTE BOOK No.

CAD by D. Burgess, 55-52

Last Saved: J:\H3RF\RFU2\SIGN\CMS-44.dwg 03/02/97 at 13:45

FED. ROAD DIST. NO.	STATE	FED. AID PROJ. NO.	FISCAL YEAR	SHEET NO.	TOTAL SHEETS
HAWAII	HAW.	I-H3-1(75), UNIT II	1997	873	1102

SIGN STRUCTURE	LOCATION	A	B	C	D	E	TRUSS PANEL SPACING	TOP & BOT CHORD SIZE	VERT. WEB SIZE	DIAG. WEB SIZE	LEFT & RIGHT POST SIZE @ BASE	DEAD LOAD DEFLECTION	ELEV. BOT. OF BASE ℙ	
													LEFT POST	RIGHT POST
E-52L & E-52R	Ramp N Sta. 34+76±	57'-0"	27'-6"	43'-0"	26'-11 3/16"	31'-5 3/16"	8 Equal Panels @ 6'-9"	14" O.D.x 3/8" thk. Wall	L5x3x5/16	L5x3x5/16	20"O.D.x3/8" thk. Wall	1/16"	137.54	133.04
E-54L & CMS-39	Moanalua Freeway O.B. Sta. 207+25±	91'-0"	19'-6"	34'-3"	25'-2 9/16"	30'-5 1/2"	14 Equal Panels @ 6'-3 7/16"	20" O.D.x3/8" thk. Wall	L5x3x3/8	L5x3x3/8	26"O.D.x3/8" thk. Wall	1/4"	184.99	179.74
E-56L & CMS-43	Moanalua Freeway O.B. Sta. 213+90	91'-0"	18'-9"	34'-3"	32'-0 15/16"	28'-10 13/16"	14 Equal Panels @ 6'-3 7/16"	20" O.D.x3/8" thk. Wall	L5x3x3/8	L5x3x3/8	26"O.D.x3/8" thk. Wall	1/4"	228.89	232.07
E-58L & E-58R	Moanalua Freeway B.L. Sta. 264+00	87'-9"	18'-0"	33'-9"	26'-10 15/16"	35'-3 1/4"	14 Equal Panels @ 6'-0 5/8"	20" O.D.x3/8" thk. Wall	L5x3x3/8	L5x3x3/8	26"O.D.x3/8" thk. Wall	1/4"	93.67	85.31
E-60 (L,C,R) & E-64	H-3 B.L. Sta. 374+~~75~~ 72 See Notes G & H	93'-0"	32'-0"	73'-0"	30'-9 15/16"	34'-10 15/16"	13 Equal Panels @ 6'-3 7/16" 2 Equal Panels @ 4'-1 3/4" Adjacent to Right Post	20" O.D.x3/8" thk. Wall	L5x3x3/8	L5x3x3/8	26"O.D.x3/8" thk. Wall	1/4"	163.64	159.56
E-37L, E-37C & E-37R	H-3 B.L. Sta. 261+25	75'-0"	28'-0"±	58'-6"±	28'-7 1/2"	28'-7 1/2"	12 Equal Panels @ 6'-0"	14" O.D.x3/8" thk. Wall	L5x3x3/8	L5x3x3/8	20"O.D.x3/8" thk. Wall	1/8"	61.06	61.05

NOTES: (Cont.)

H. The outbound Drilled shaft location is to be moved 4.5' from Plan Location away from PCC.

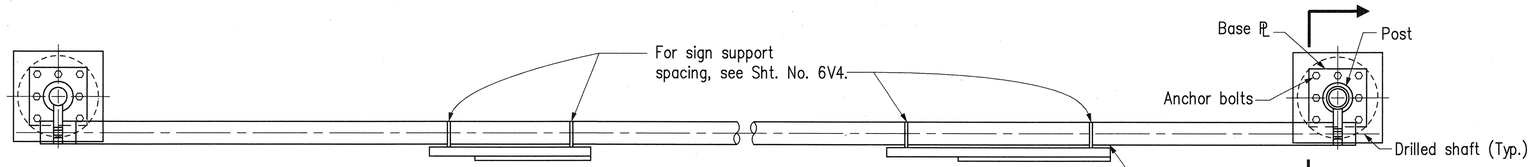

PLAN – OVERHEAD SIGN STRUCTURES

Not To Scale

(E-52L & E-52R, E-54L & CMS-39, E-56L & CMS-43, E-58L & E-58R, E-60 (L, C, & R), & E-64, E-37L, E-37C & E-37R)

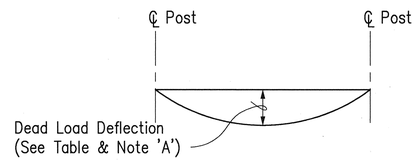

DEAD LOAD DEFLECTION

Not To Scale

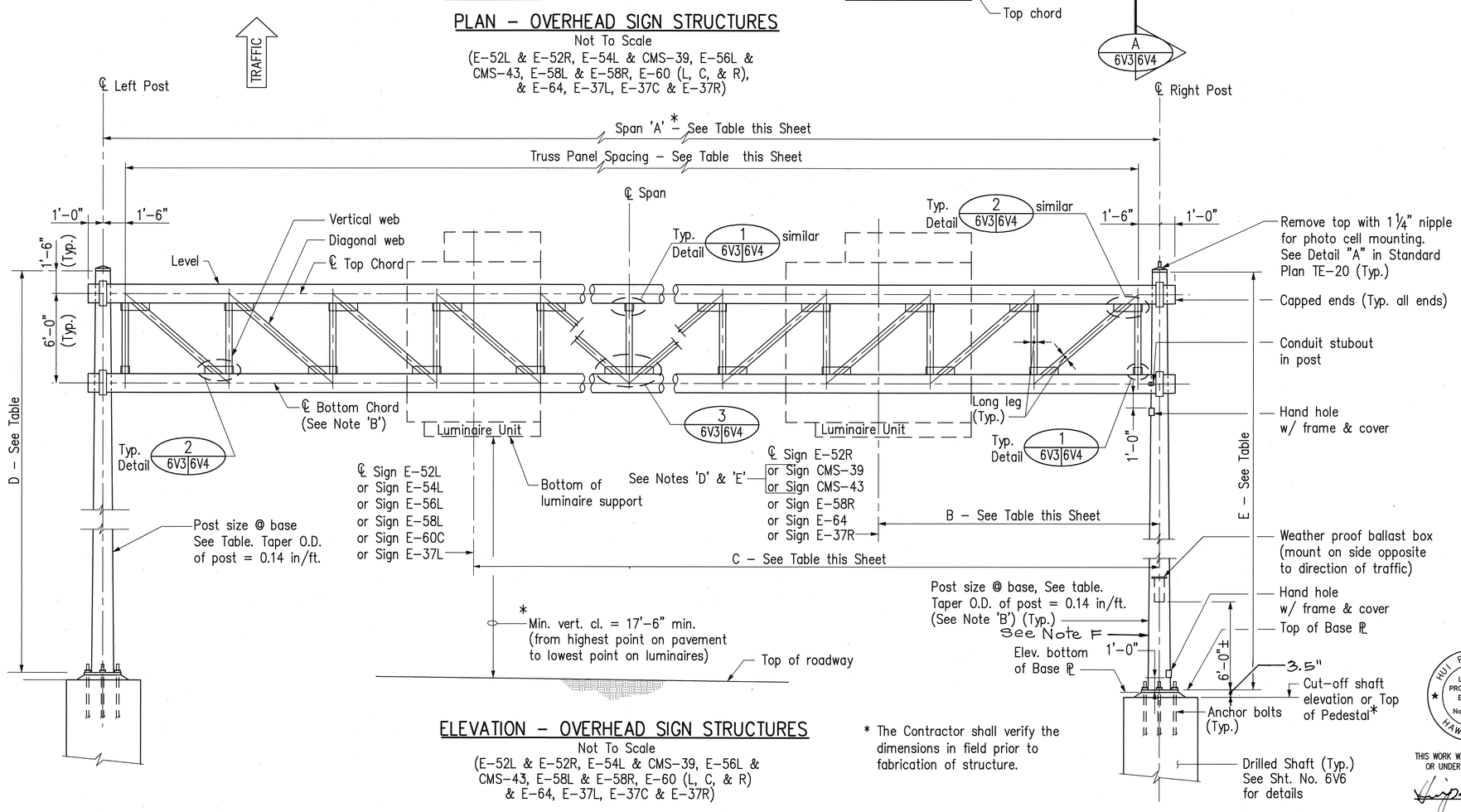

ELEVATION – OVERHEAD SIGN STRUCTURES

Not To Scale

(E-52L & E-52R, E-54L & CMS-39, E-56L & CMS-43, E-58L & E-58R, E-60 (L, C, & R) & E-64, E-37L, E-37C & E-37R)

* The Contractor shall verify the dimensions in field prior to fabrication of structure.

NOTES:

A. The dead load deflection includes the effect of the weight of the truss. A camber shall be provided to accommodate this deflection.

B. Provide conduit stubouts in bottom chord for luminaire wiring as required. At these locations, place handholes on bottom side of chord 1'-0" from hole.

C. For sign structure notes, see Sht. No. 6V1.

D. CMS 39 and CMS 43 sign panels are State-Furnished. For assembly and mounting details, see Sht. No. SY-98.

E. The Contractor shall furnish and install mounting brackets as shown on Sht. No. 6V5 for CMS 39 and CMS43.

F. Sign Structures E-37, E-52, E-54, E-56, E-58, E-60 are supported by straight Poles.

G. The Inbound Drilled Shaft location is to be moved 2.5' from Plan Location towards the PCC.

Date	Revision
10/10/97	Revised Table for Sign Structure E-60 (L,C,R) & E-64, E-37(L,C,R). Revised Shaft Cut-off on Elevation
4/21/97	Revised Table, Added Sign E-37L, E-37C & E-37R

STATE OF HAWAII
DEPARTMENT OF TRANSPORTATION
HIGHWAYS DIVISION

DESTINATION SIGNS
SIGN STRUCTURES
OVERHEAD TYPE

H-3 FINISH (UNIT II)
FAIP NO. I-H3-1(75), UNIT II
LEEWARD SECTION

SCALE: AS SHOWN DATE: JANUARY 1997

HUI PANG CHEN
LICENSED PROFESSIONAL ENGINEER
No. 3865-S
HAWAII, U.S.A.

THIS WORK WAS PREPARED BY ME OR UNDER MY SUPERVISION.

Hui Pang Chen

SHEET NO. 6V3 OF 14 SHEETS

C.O. ADD. 873

ORIGINAL PLAN | SURVEY PLOTTED BY | DRAWN BY | TRACED BY | DESIGNED BY | QUANTITIES BY | CHECKED BY | DATE | NOTE BOOK | No.

CAD by D. Burgess, 55-52

Last Saved: J:\H3RF\RFU2\CO\SIGN\CO-OVRHD.dwg 10/09/97 at 11:16

FED. ROAD DIST. NO.	STATE	FED. AID PROJ. NO.	FISCAL YEAR	SHEET NO.	TOTAL SHEETS
HAWAII	HAW.	I-H3-1(75), UNIT II	1997	874	1102

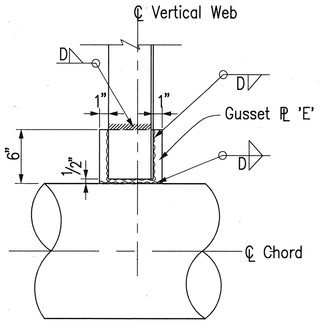

DETAIL 1
Not To Scale 6V2,6V3 | 6V4

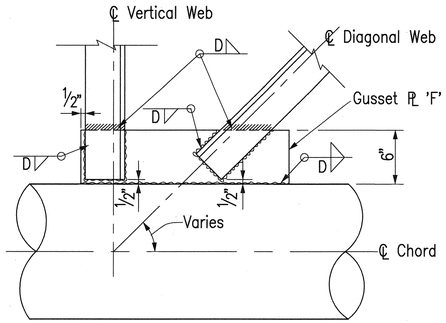

DETAIL 2
Not To Scale 6V2,6V3 | 6V4

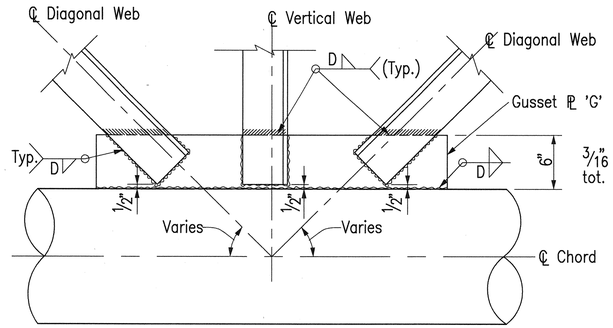

DETAIL 3
Not To Scale 6V2,6V3 | 6V4

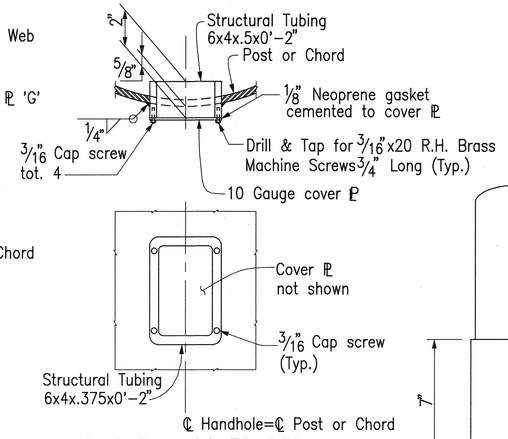

HANDHOLE & COVER DETAILS
Not To Scale

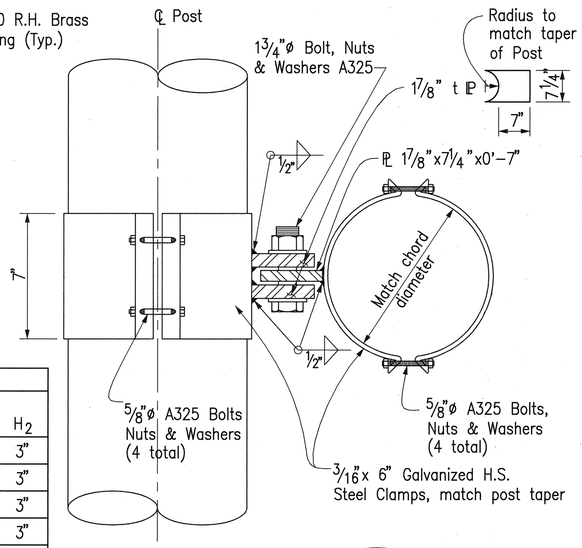

SECTION A
Scale: 3" = 1'-0" 6V3 | 6V4

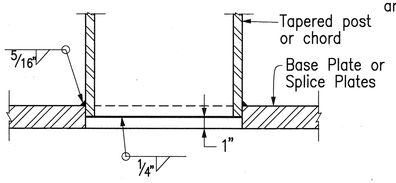

POST TO BASE PLATE & SPLICE WELDING DETAIL
Not To Scale

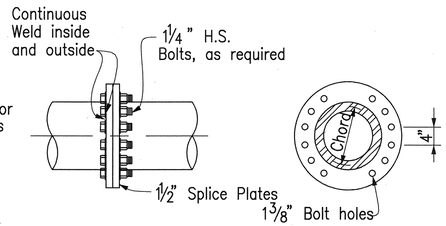

FIELD SPLICE DETAIL
Not To Scale

NOTE:
Field splice or Shop splice located at top & bottom chords of each truss shall be staggered and at alternating locations. Indicate splice locations on shop fabrication drawings for approval. In no case shall splices be located at midspan of the truss.

SIGN STRUCTURE	GUSSET PLATE Weld 'D'	'E'	'F'	'G'	BASE PLATE ANCHOR BOLT ø	PLATE	H_1	H_2
CMS-44	1/4"	ℙ 1/2"x 6"x 0'-6"	ℙ 1/2"x 6"x 2'-3"	–	2"	ℙ 2"x35"x2'-11"	1'-2 1/2"	3"
E-52L & E-52R	1/4"	ℙ 1/2"x 6"x 0'-7"	ℙ 1/2"x 6"x 2'-3"	ℙ 1/2"x 6"x 3'-10"	1 3/4"	ℙ 1 3/4"x31"x2'-7"	1'-0 1/2"	3"
E-54L & CMS-39	1/4"	ℙ 1/2"x 6"x 0'-7"	ℙ 1/2"x 6"x 2'-0"	ℙ 1/2"x 6"x 3'-3"	2"	ℙ 2 1/4"x41"X3'-5"	1'-5 1/2"	3"
E-56L & CMS-43	1/4"	ℙ 1/2"x 6"x 0'-7"	ℙ 1/2"x 6"x 2'-0"	ℙ 1/2"x 6"x 3'-3"	2"	ℙ 2 1/4"x41"X3'-5"	1'-5 1/2"	3"
E-58L & E-58R	1/4"	ℙ 1/2"x 6"x 0'-7"	ℙ 1/2"x 6"x 1'-9"	ℙ 1/2"x 6"x 2'-9"	2"	ℙ 2 1/4"x41"X3'-5"	1'-5 1/2"	3"
E-60 (L, C, R) & E-64	1/4"	ℙ 1/2"x 6"x 0'-7"	ℙ 1/2"x 6"x 2'-0"	ℙ 1/2"x 6"x 3'-3"	2"	ℙ 2 1/4"x41"X3'-5"	1'-5 1/2"	3"
E-37L, E-37C & E-37R	1/4"	ℙ 1/2"x 6"x 0'-7"	ℙ 1/2"x 6"x 1'-9"	ℙ 1/2"x 6"x 2'-9"	2"	ℙ 2 1/4"x31"X2'-7"	1'-0 1/2"	3"

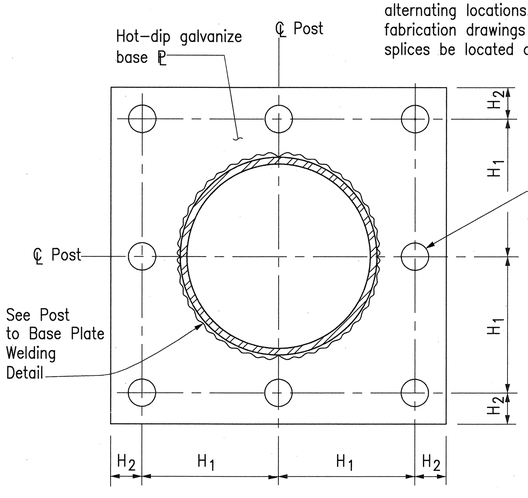

BASE PLATE DETAILS
Not To Scale

NOTE:
The Contractor shall verify the locations of the anchor bolts prior to fabrication of base ℙ

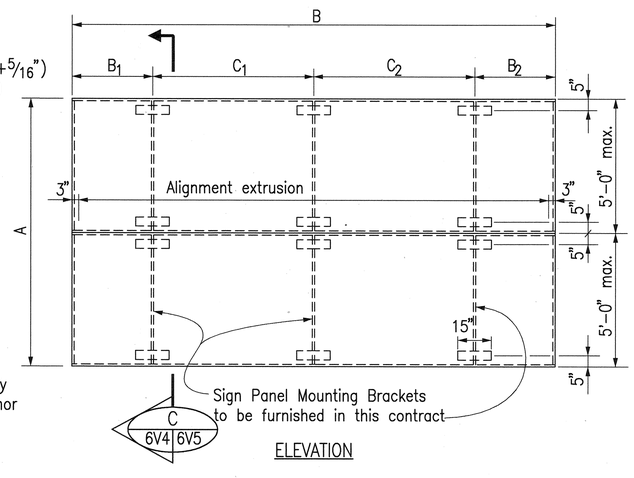

ELEVATION

TYPICAL FIXED MESSAGE SIGN (FMS) ASSEMBLY
Not To Scale
(For Sign Panel Assembly Detail, see Standard Plan TE-25)

FMS SIGN SUPPORT SPACING

SIGN	A	B	B_1	B_2	C_1	C_2	Alum. Mounting Beam
E-52L	11'-6"	16'-0"	1'-9"	2'-3"	6'-9"	5'-3"	L 5x3x1/2
E-52R	8'-0"	15'-0"	2'-0"	1'-3"	5'-0"	6'-9"	L 6x3 1/2x1/2
E-54L	11'-0"	16'-0"	2'-6"	9"	6'-3"	6'-6"	L 6x3 1/2x1/2
E-56L	11'-0"	16'-0"	2'-6"	9"	6'-3"	6'-6"	L 6x3 1/2x1/2
E-58L	18'-0"	15'-6"	1'-9"	2'-0"	6'-0"	5'-9"	C 6x3x5.77
E-58R	11'-0"	16'-0"	2'-0"	1'-6"	6'-0"	6'-6"	L 6x3 1/2x1/2
E-60L	13'-6"	17'-0"	1'-3"	2'-0"	7'-3"	6'-6"	L 6x3 1/2x1/2
E-60C	11'-0"	12'-0"	3'-0"	2'-3"	---	---	L 6x3 1/2x1/2
E-60R	11'-0"	11'-0"	1'-9"	2'-6"	---	---	L 6x3 1/2x1/2
E-64	6'-6"	23'-6"	3'-0"	3'-0"	8'-9"	8'-9"	C 6x3x5.77
E-37L	15'-6"	16'-6"	2'-0"	2'-0"	6'-3"	6'-3"	C 6x3x5.77
E-37C	11'-0"	13'-6"	3'-0"	1'-9"	---	---	L 6x3 1/2x1/2
E-37R	8'-0"	15'-6"	2'-0"	2'-0"	5'-9"	5'-9"	L 6x3 1/2x1/2

Date	Revision
10/10/97	Revised Base ℙ for Sign Structures E-52(L&R), E-37(L,C,R,). Revised Table for FMS Sign Support Spacing.
4/21/97	Revised Table, Added Sign E-37L, E-37C & E-37R

HUI PANG CHEN
LICENSED PROFESSIONAL ENGINEER
No. 3865-S
HAWAII, U.S.A.

THIS WORK WAS PREPARED BY ME OR UNDER MY SUPERVISION.

Huipang Chen

STATE OF HAWAII
DEPARTMENT OF TRANSPORTATION
HIGHWAYS DIVISION

DESTINATION SIGNS
SIGN STRUCTURES
CONNECTION DETAILS – 1

H-3 FINISH (UNIT II)
FAIP NO. I-H3-1(75), UNIT II
LEEWARD SECTION

SCALE: AS SHOWN DATE: JANUARY 1997

SHEET NO. 6V4 OF 14 SHEETS

ORIGINAL PLAN | SURVEY PLOTTED BY | DRAWN BY | TRACED BY | DESIGNED BY | QUANTITIES BY | CHECKED BY | DATE
NOTE BOOK No.

CAD by D. Burgess, 55-52

Last Saved: J:\H3RF\RFU2\CO\SIGN\CO-CON1.dwg 10/09/97 at 11:19

C.O. ADD. 874

FED. ROAD DIST. NO.	STATE	FED. AID PROJ. NO.	FISCAL YEAR	SHEET NO.	TOTAL SHEETS
HAWAII	HAW.	I-H3-1(75), UNIT II	1997	875	1102

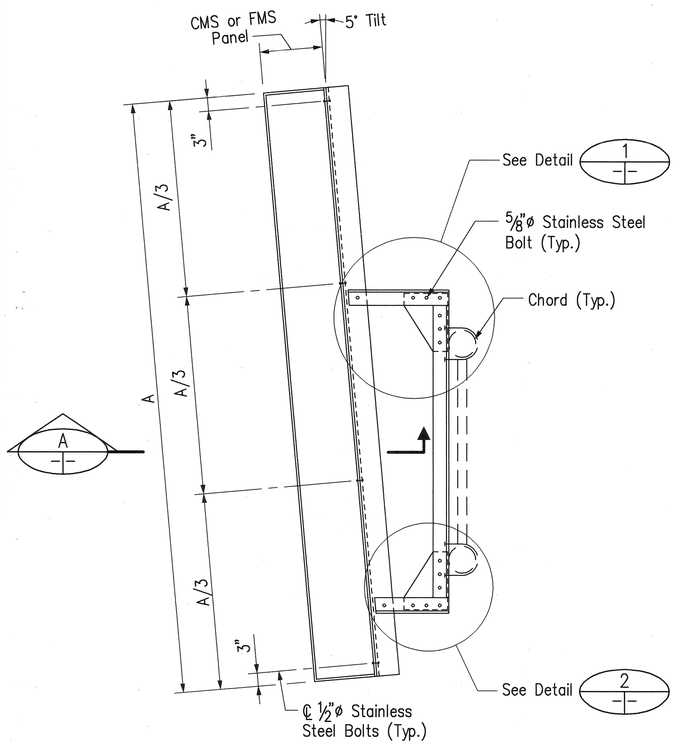

MOUNTING BRACKET DETAIL C
Not To Scale
6V2,6V4,6V5 | 6V5

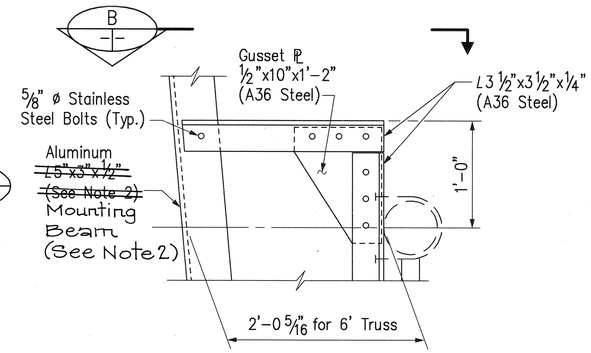

DETAIL 1
Not To Scale

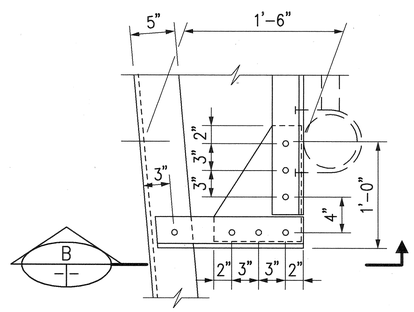

DETAIL 2
Not To Scale

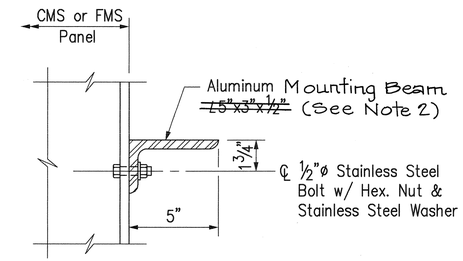

SECTION A
Scale: 3" = 1'-0"
6V5,6V8 | 6V5

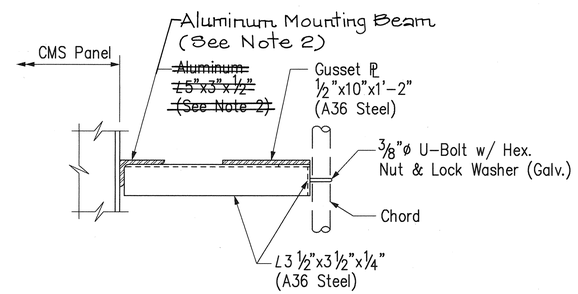

SECTION B
Not To Scale

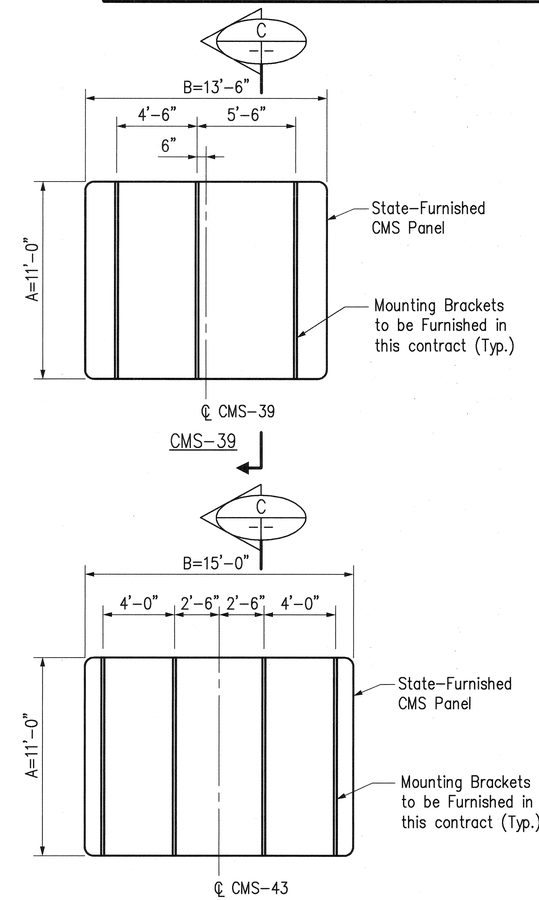

CMS SIGN SUPPORT SPACING
Not to Scale

NOTES:

1. The dimensions for height of existing truss and locations of CMS panel mounting brackets shall be verified in field prior to fabrication of CMS panel and mounting bracket.
2. Contact surface between structural steel and aluminum shall be separated with min. 1/16" thick neoprene gasket.
3. The ∠8"x4"x1/2" light blocking member shall prevent sign luminaires from illuminating the changeable message matrix modules while allowing the illumination of the fixed message portion of the sign. Location 'X' shall be determined after the changeable message sign and sign luminaires have been installed and are in operating condition. The ∠8"x4"x1/2" light blocking member shall be adjusted in the field to determine location 'X' in the presence of the Engineer. Field adjustments shall occur at night while both luminaires and changeable message signs are illuminated. Scheduling of field adjustments of light blocking member shall be coordinated with the Electrical Contractor to simultaneously adjust the luminaires. Location 'X' is subject to approval by the Engineer.
4. Drill 7/8"ø hole on the gusset plate while conflicting with U-Bolt.

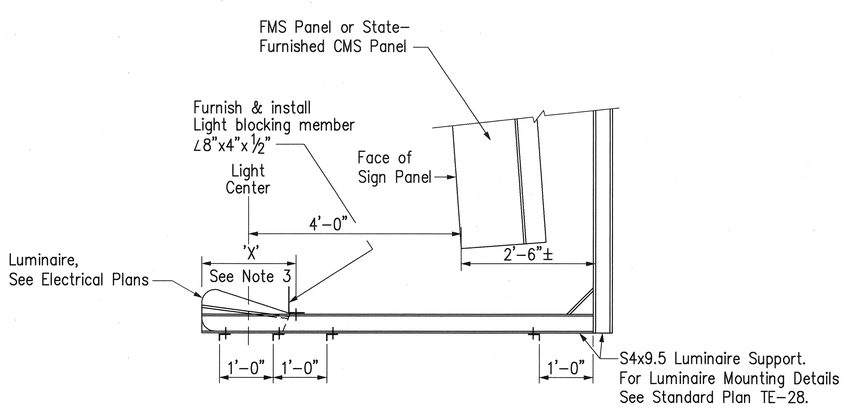

LUMINAIRE MOUNTING
Scale: 3/4" = 1'-0"

ORIGINAL PLAN	SURVEY PLOTTED BY	DATE
	DRAWN BY	
NOTE BOOK	TRACED BY	
	DESIGNED BY	
No.	QUANTITIES BY	
	CHECKED BY	

CAD by D. Burgess, 05-52

Last Saved: J:\H3RF\RFU2\SIGN\CONNDET2.dwg 02/27/97 at 13:29

HUI PANG CHEN
LICENSED PROFESSIONAL ENGINEER
No. 3865-S
HAWAII, U.S.A.

THIS WORK WAS PREPARED BY ME OR UNDER MY SUPERVISION.

STATE OF HAWAII
DEPARTMENT OF TRANSPORTATION
HIGHWAYS DIVISION

DESTINATION SIGNS
SIGN STRUCTURES
CONNECTION DETAILS – 2

H-3 FINISH (UNIT II)
FAIP NO. I-H3-1(75), UNIT II
LEEWARD SECTION

SCALE: AS SHOWN DATE: JANUARY 1997

SHEET NO. 6V5 OF 14 SHEETS

875

FED. ROAD DIST. NO.	STATE	FED. AID PROJ. NO.	FISCAL YEAR	SHEET NO.	TOTAL SHEETS
HAWAII	HAW.	I-H3-1(75), UNIT II	1997	876	1102

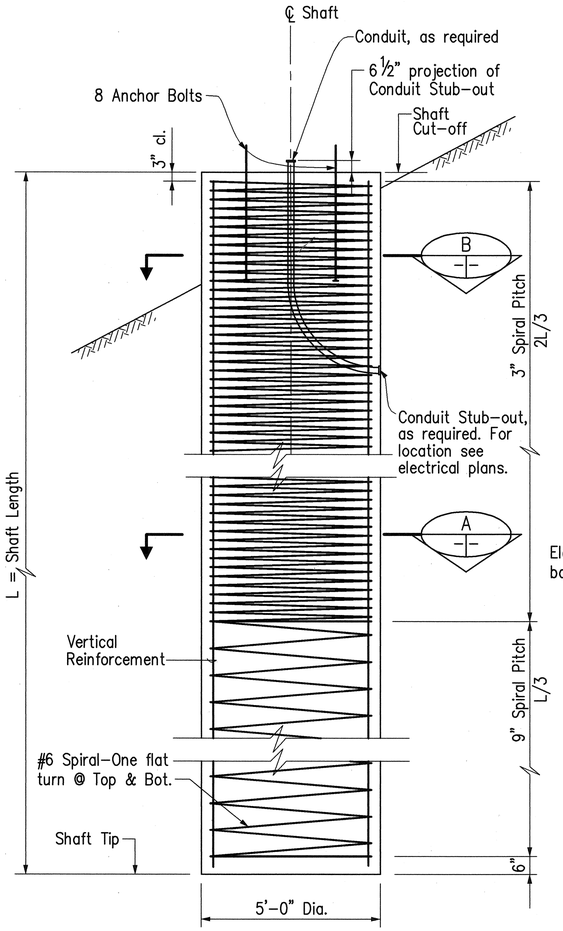

TYPE A DRILLED SHAFT ELEVATION
Not To Scale

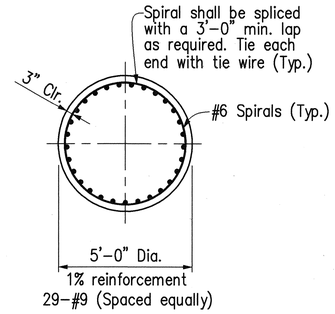

SECTION A
Scale: 3/8" = 1'-0"

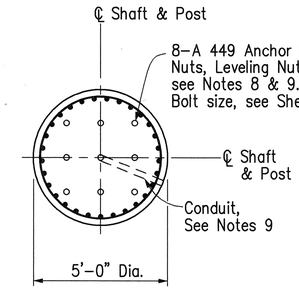

SIGN STRUCTURES
CMS-44, E-52L & E-52R

SECTION B
Scale: 3/8" = 1'-0"

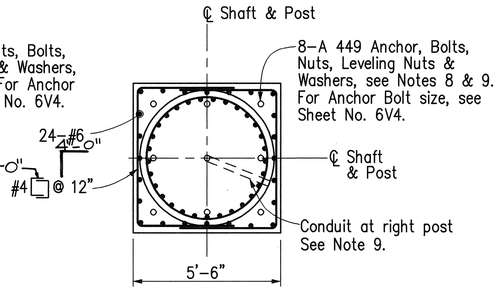

SIGN STRUCTURES
E-54L & CMS-39, E-56L & CMS-43,
E-58L & E-58R, E-60(L, C, R) & E-64

SECTION C
Scale: 3/8" = 1'-0"

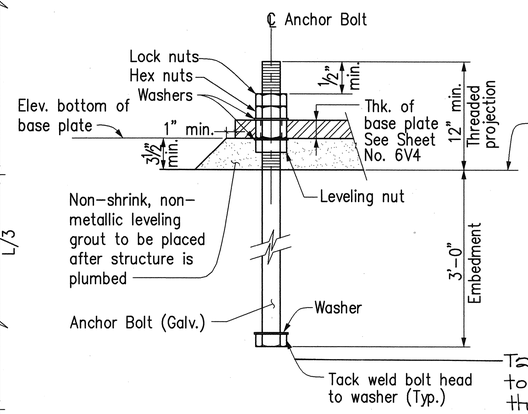

ANCHOR BOLT DETAIL
Not To Scale

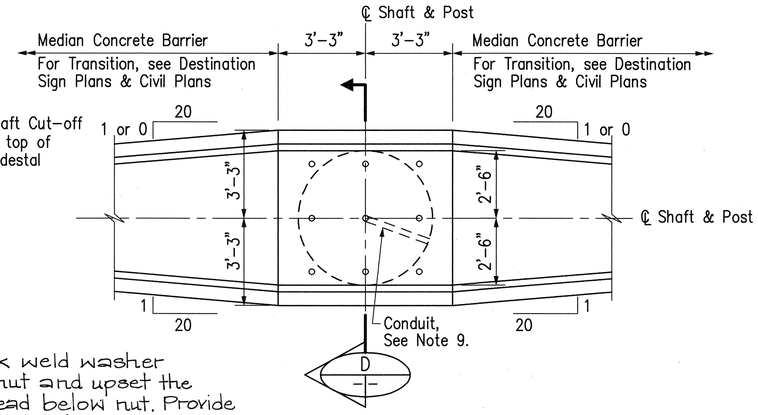

PLAN AT MEDIAN
Scale: 3/8" = 1'-0"

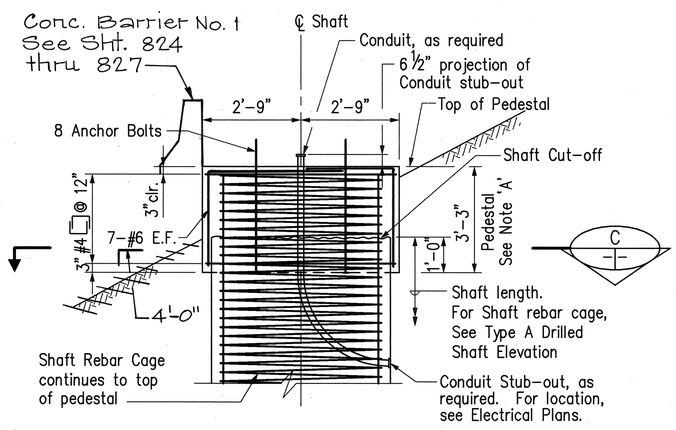

TYPE B DRILLED SHAFT ELEVATION
Not To Scale

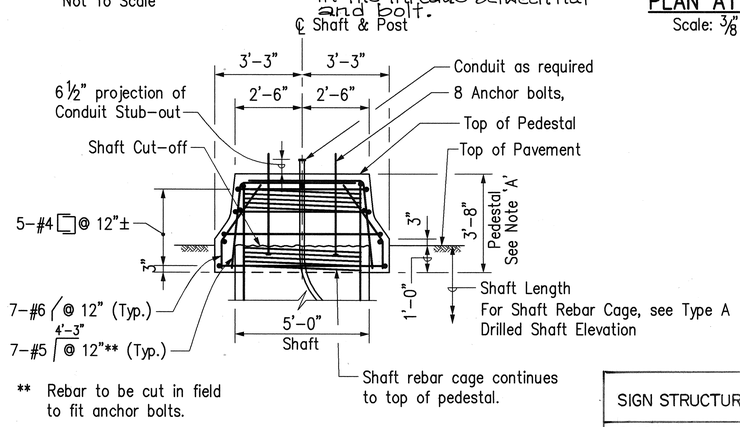

** Rebar to be cut in field to fit anchor bolts.

TYPE C DRILLED SHAFT ELEVATION

SECTION D
Scale: 3/8" = 1'-0"

NOTE 'A':

Pedestal on top of drilled shaft shall be considered incidental to Drilled Shaft and will not be paid for separately.

SIGN STRUCTURE	@LEFT POST AS-BUILT TIP ELEV.	@RIGHT POST AS-BUILT TIP ELEV.
CMS-44	—	64.8
E-52L & E-52R	114.73	111.0
E-54L & CMS-39	155.81	152.5
E-56L & CMS-43	206.2	210.26
E-58L & E-58R	61.0	54.3
E-60L & E-60R	137.89	131.67
E-37L & E-37R	35.75	34.08

NOTES:

1. Centering devices shall be used to maintain the reinforcement cage in position within the shaft hole.
2. Provide sizing hoops as a guide for the fabrication of the rebar cage.
3. Provide temporary stiffeners to strengthen the rebar cage during lifting. Stiffeners are to be removed prior to puring of concrete.
4. Splices in the longitudinal steel, if required, should be staggered so as not to occur at the same horizontal plane along the rebar cage. The stagger shall be 1'-0" minimum.
5. Use #6 circular spiral for rebar cage. Circular ties shall not be used in drilled shafts except otherwise noted.
6. The rebar cage shall be fabricated and stored so as to avoid distortion during transportation to the job site and to avoid contamination with mud or other deleterious material.
7. The spiral pitch may be opened wider at the location where the Conduit Stub-out is required in the Shaft. During the construction of the Shaft, the Contractor shall seal the end of the Conduit Stub-out and provide a device to indentify its location in the Shaft for later Conduit connection. The conduit and conduit stub-out will be considered incidental to drilled shaft and will not be paid for separately.
8. For installation of anchor bolts, the Contractor shall provide rigid templates at top and ties at bottom to maintain the anchor bolts in proper locations.
9. The anchor bolts and Conduit shall be installed prior to pouring shaft concrete and shall be protected at all times during construction.
10. Concrete for drilled shafts shall have a minimum 28 days compressive strength of 4500 PSI.
11. All reinforcing steel shall be ASTM A615 Grade 60.
12. For all drilled shafts, the Contractor shall provide a minimum 5'-0" long temporary casing to control the upper drilled hole size.
13. For borings and locations, see Sht. Nos. 6H1 through 6H8.

SIGN STRUCTURE	@ LEFT POST SHAFT TYPE	SHAFT LENGTH	SHAFT CUT-OFF ELEV.	@ RIGHT POST SHAFT TYPE	SHAFT LENGTH	SHAFT CUT-OFF ELEV.
CMS-44	–	–	–	A	20'	~~84.78~~ 80.8
E-52L & E-52R	E* ~~C~~	20'	~~134.87~~ 133.73	A	20'	~~130.79~~ 128.5
E-54L & CMS-39	C	25'	~~182.32~~ 180.31	B	25'	~~177.49~~ 175.5
E-56L & CMS-43	C	20'	~~226.22~~ 226.5	B	20'	~~229.82~~ 227.26
E-58L & E-58R	C ~~E~~*	30'	~~91.00~~ 87.0	B	30'	~~83.06~~ 80.3
E-60 (L, C, R) & E-64	B	25'	~~161.39~~ 160.89	B	25'	~~157.31~~ 153.67
E-37L, E-37C & E-37R	G*	25'	~~60.81~~ 56.55	F*	25'	~~60.80~~ 56.08

* See Sht. No. 6V7A

Date	Revision
4/21/97	Revised Table, Added Sign E-37L, E-37C & E-37R

HUI PANG CHEN
LICENSED PROFESSIONAL ENGINEER
No. 3865-S
HAWAII, U.S.A.

THIS WORK WAS PREPARED BY ME OR UNDER MY SUPERVISION.

Hui Pang Chen

STATE OF HAWAII
DEPARTMENT OF TRANSPORTATION
HIGHWAYS DIVISION

DESTINATION SIGNS
SIGN STRUCTURES
FOUNDATION DETAILS

H-3 FINISH (UNIT II)
FAIP NO. I-H3-1(75), UNIT II
LEEWARD SECTION

SCALE: AS SHOWN DATE: JANUARY 1997

SHEET NO. 6V6 OF 14 SHEETS

ADD 876

ORIGINAL PLAN
SURVEY PLOTTED BY
DRAWN BY
TRACED BY
DESIGNED BY
QUANTITIES BY
CHECKED BY
DATE
NOTE BOOK
No.

CAD by D. Burgess, 55-52

Last Saved: J:\H3RF\RFU2\SIGN\S-SHAFT1.dwg 04/17/97 at 15:33

FED. ROAD DIST. NO.	STATE	FED. AID PROJ. NO.	FISCAL YEAR	SHEET NO.	TOTAL SHEETS
HAWAII	HAW.	I-H3-1(75), UNIT II	1997	877	1102

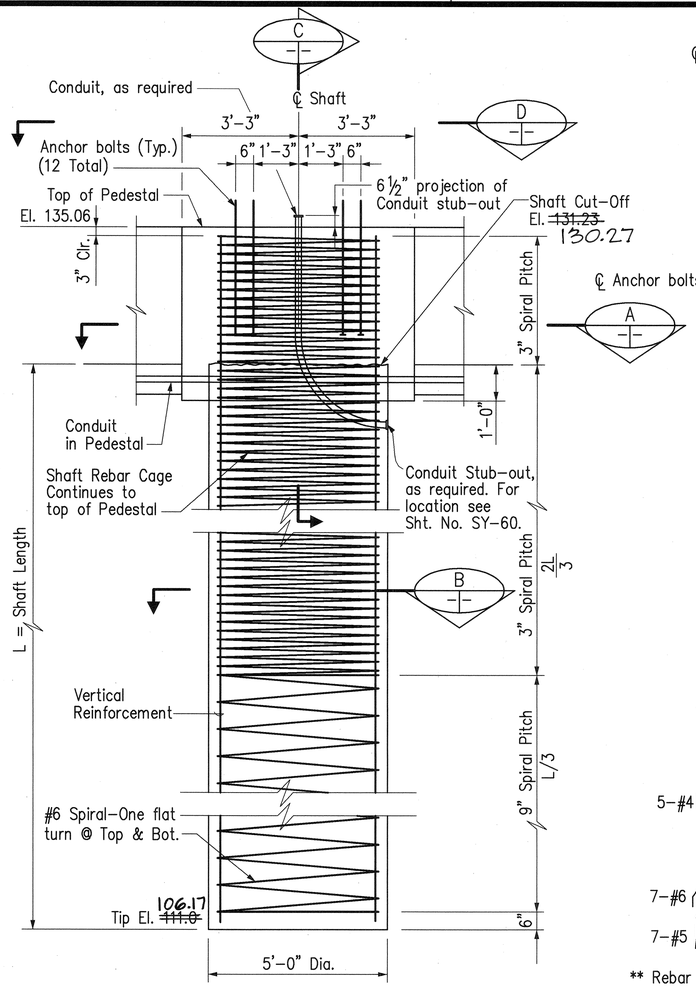

TYPE D DRILLED SHAFT ELEVATION FOR VMS 37

Not To Scale

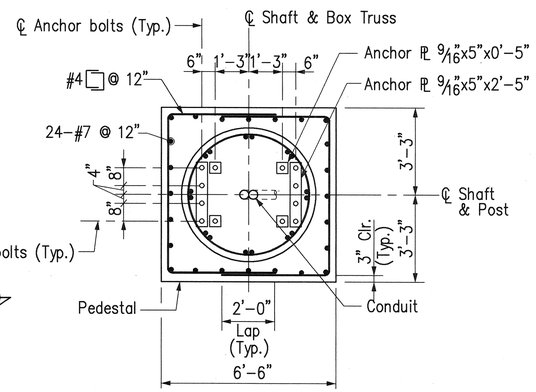

SECTION A
Scale: 3/8" = 1'-0"

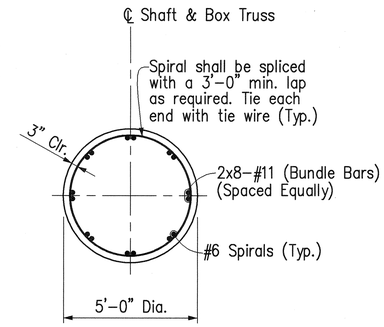

SECTION B
Scale: 3/8" = 1'-0"

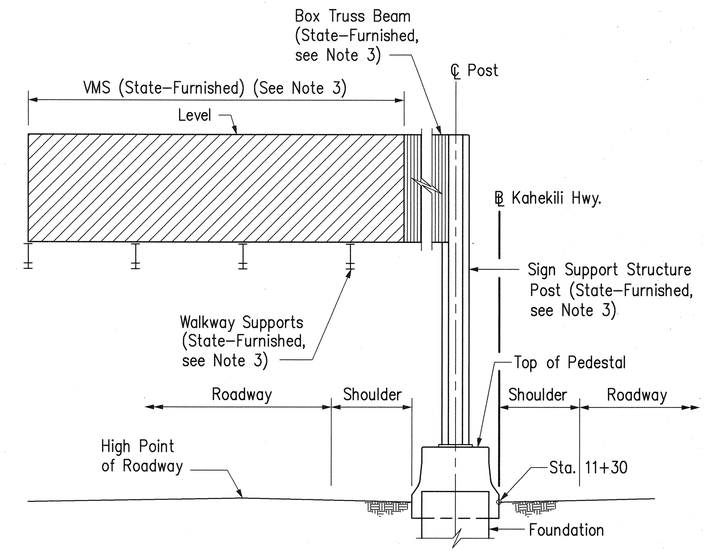

SIGN STRUCTURE FOR VMS 37

Not to Scale

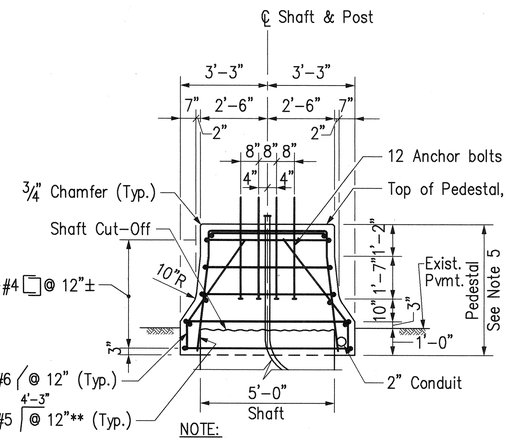

** Rebar to be cut in field
to fit anchor bolts.

NOTE:
Shaft Rebar Cage
not shown for clarity

SECTION C
Scale: 3/8" = 1'-0"

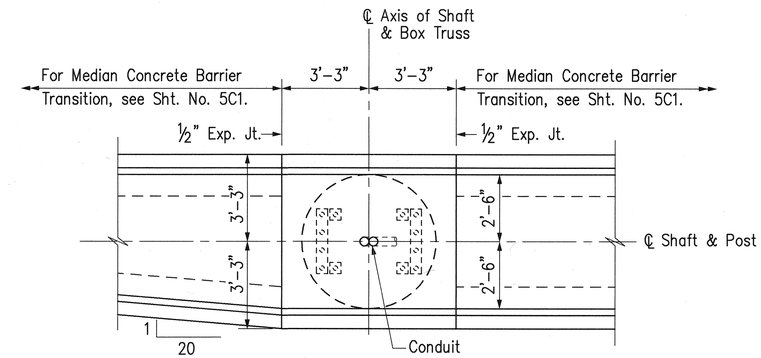

VIEW D
Scale: 3/8" = 1'-0"

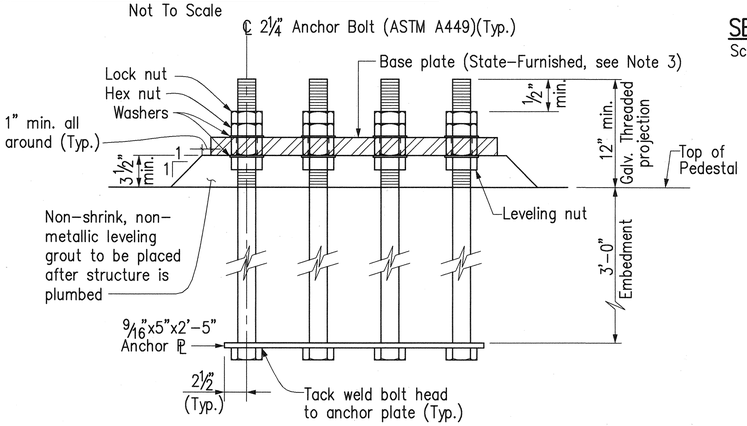

ANCHOR BOLT DETAIL

Not To Scale

NOTES:

1. The Contractor shall furnish and install drilled shaft, anchor plates, anchor bolts, hex nuts, lock nuts, leveling nuts, washers, and leveling grout for VMS 37 as shown.
2. For drilled shaft notes, see Sht. No. 6V6.
3. For State-Furnished Sigh Support Structure (Box Truss Beam, Support Post, Walkway Supports) and VMS, see Sht. No. SY-103.
4. For Location of conduit stub-out, see Sht. No. SY-60.
5. Pedestal on top of drilled shaft shall be considered incidental to "5'-0" Diameter Drilled Shaft Type D for Sign Structure" and will not be paid for separately.

HUI PANG CHEN
LICENSED PROFESSIONAL ENGINEER
No. 3865-S
HAWAII, U.S.A.

THIS WORK WAS PREPARED BY ME
OR UNDER MY SUPERVISION.

STATE OF HAWAII
DEPARTMENT OF TRANSPORTATION
HIGHWAYS DIVISION

DESTINATION SIGNS
SIGN STRUCTURES
VMS 37 FOUNDATION

H-3 FINISH (UNIT II)
FAIP NO. I-H3-1(75), UNIT II
LEEWARD SECTION

SCALE: AS SHOWN DATE: JANUARY 1997

SHEET NO. 6V7 OF 14 SHEETS

877

ORIGINAL PLAN | SURVEY PLOTTED BY | DRAWN BY | TRACED BY | DESIGNED BY | QUANTITIES BY | CHECKED BY | DATE
NOTE BOOK No. ___

CAD by D. Burgess, 55-52.

Last Saved: J:\H3RF\RFU2\WINDWARD\WIN-FND.dwg 03/02/97 at 14:19

FED. ROAD DIST. NO.	STATE	FED. AID PROJ. NO.	FISCAL YEAR	SHEET NO.	TOTAL SHEETS
HAWAII	HAW.	I-H3-1(75), UNIT II	1997	ADD. 877S-1	1102

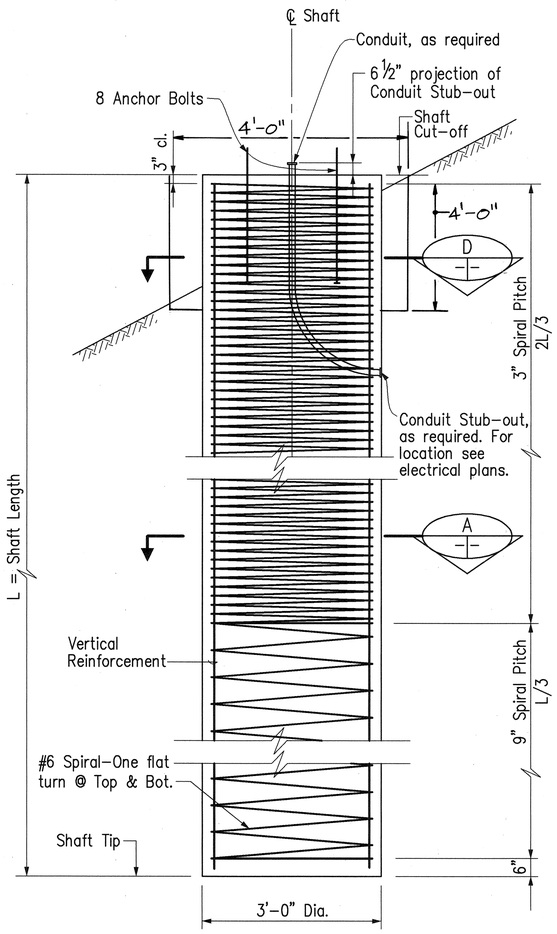

TYPE F DRILLED SHAFT ELEVATION

Not To Scale

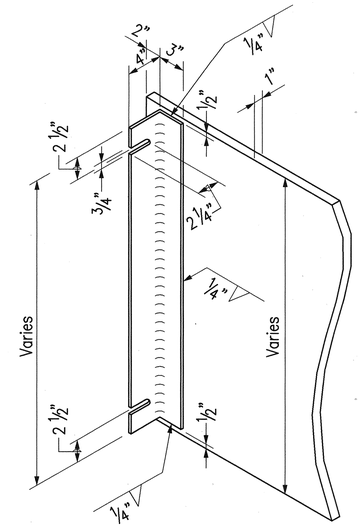

COVER PLATE DETAIL

Scale: 1½" = 1'-0"

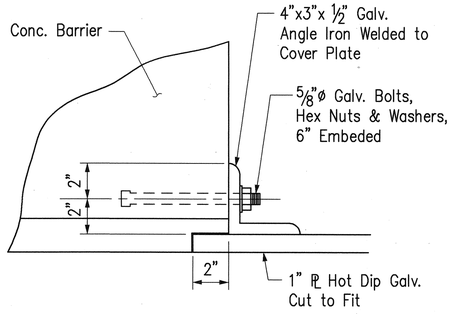

COVER PLATE ANCHOR DETAIL

Scale: 3" = 1'-0"

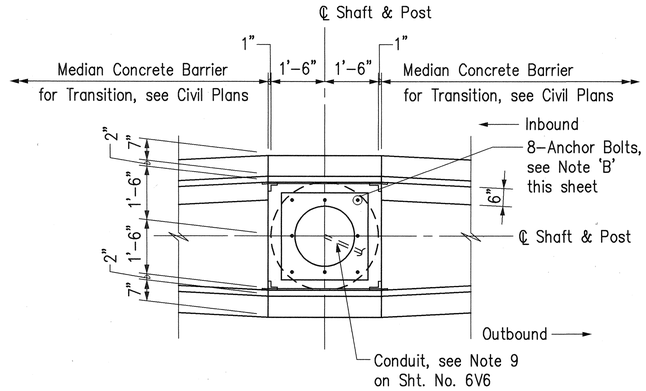

PLAN AT MEDIAN

SIGN STRUCTURE E-37L, E-37C & E-37R

Scale: ½" = 1'-0"

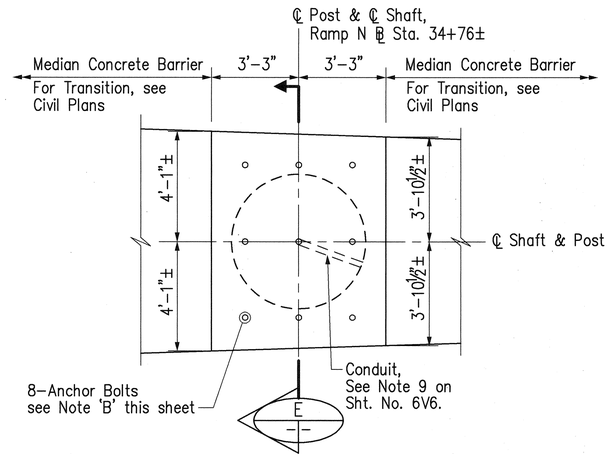

PLAN AT MEDIAN

SIGN STRUCTURE E-52L & E-52R

Scale: ⅜" = 1'-0"

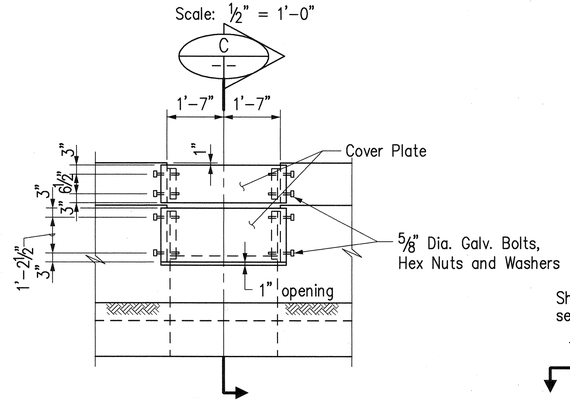

SIDE ELEVATION AT MEDIAN

SIGN STRUCTURE E-37L, E-37C & E-37R

Scale: ½" = 1'-0"

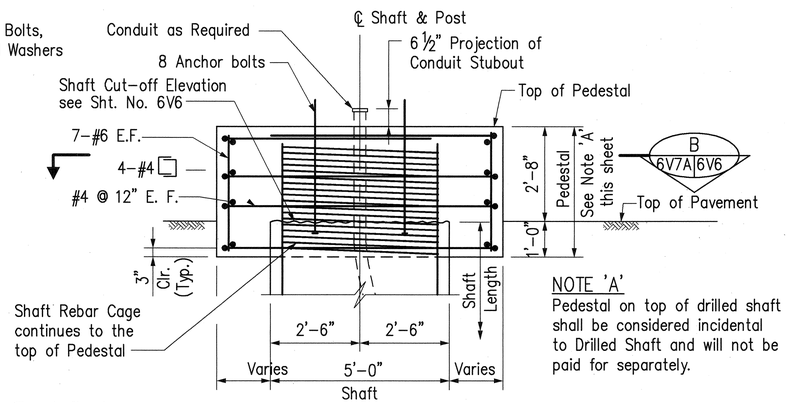

For shaft rebar cage, see Type A Drilled Shaft Elevation on Sht. No. 6V6.

TYPE E DRILLED SHAFT ELEVATION

SECTION E

Scale: ½" = 1'-0"

NOTE 'A'

Pedestal on top of drilled shaft shall be considered incidental to Drilled Shaft and will not be paid for separately.

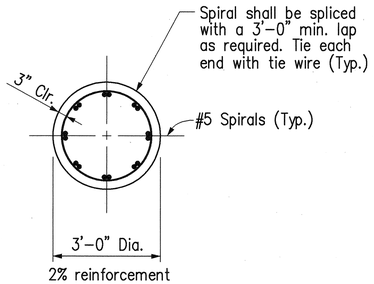

2% reinforcement
8 Sets 2-#10 bundled
(Spaced equally)

SECTION A

Scale: ½" = 1'-0"

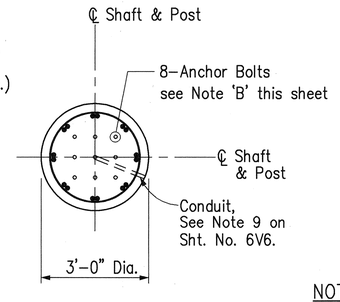

SECTION D

Scale: ½" = 1'-0"

NOTE: 'B'

Anchor Bolts, Bolts, Nuts, Leveling Nuts & Washers, see Notes 8 & 9 on Sht. No. 6V6. For Anchor Bolt size & Details, see Sht. No. 6V4 & Sht. No. 6V6.

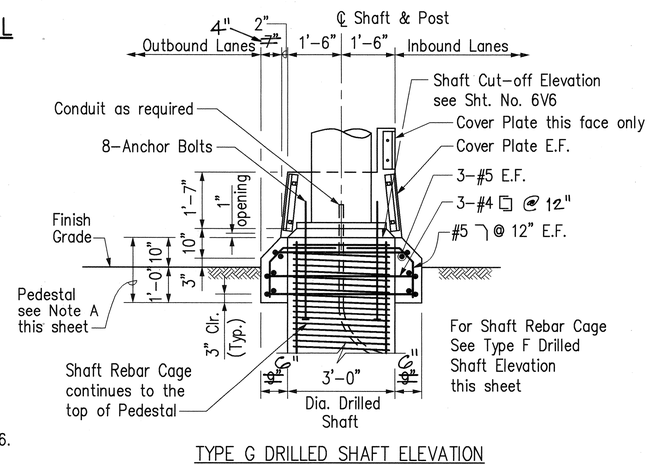

TYPE G DRILLED SHAFT ELEVATION

SECTION C

Scale: ½" = 1'-0"

NOTE:

See Notes on Sht. No. 6V6.

HUI PANG CHEN
LICENSED PROFESSIONAL ENGINEER
No. 3865-S
HAWAII, U.S.A.

THIS WORK WAS PREPARED BY ME OR UNDER MY SUPERVISION.

Hui Pang Chen

Date	Revision
5/2/97	Added Cover Plate
4/21/97	Added this Sheet

STATE OF HAWAII
DEPARTMENT OF TRANSPORTATION
HIGHWAYS DIVISION

DESTINATION SIGNS
SIGN STRUCTURES
FOUNDATION DETAILS

H-3 FINISH (UNIT II)
FAIP NO. I-H3-1(75), UNIT II
LEEWARD SECTION

SCALE: AS SHOWN DATE:

SHEET NO. 6V7A OF 14 SHEETS

ADD. 877S-1

ORIGINAL PLAN | SURVEY PLOTTED BY | DRAWN BY | TRACED BY | DESIGNED BY | QUANTITIES BY | CHECKED BY | DATE
NOTE BOOK No.

CAD by D. Burgess, 55-52

Last Saved: J:\H3RF\RFU2\SIGN\S-SHAFT2.dwg 04/29/97 at 14:39

FED. ROAD DIST. NO.	STATE	FED. AID PROJ. NO.	FISCAL YEAR	SHEET NO.	TOTAL SHEETS
HAWAII	HAW.	I-H3-1(75), UNIT II	1997	C.O. 877S-2	1102

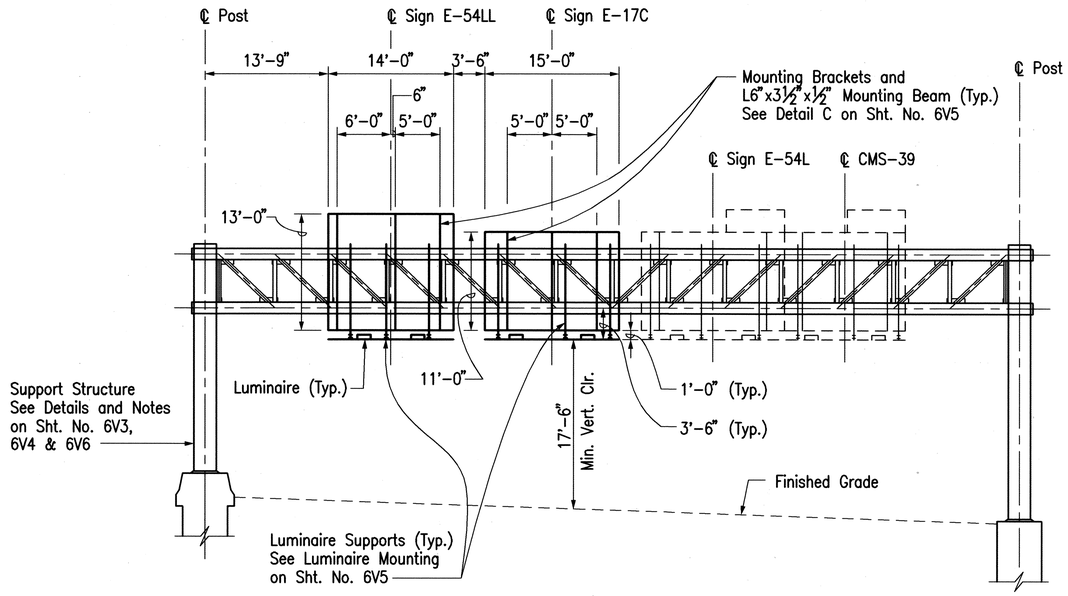

ELEVATION – SIGN E-54LL & CMS-39

MOANALUA FREEWAY OUTBOUND STA. 207+25±

Scale: ⅛" = 1'-0"

Date	Revision
7/10/98	Added Signs E-54LL & E-17C

HUI PANG CHEN
LICENSED PROFESSIONAL ENGINEER
No. 3865-S
HAWAII, U.S.A.

THIS WORK WAS PREPARED BY ME OR UNDER MY SUPERVISION.

Huipang Chen

STATE OF HAWAII
DEPARTMENT OF TRANSPORTATION
HIGHWAYS DIVISION

DESTINATION SIGNS
SIGN STRUCTURES

H-3 FINISH (UNIT II)
FAIP NO. I-H3-1(75), UNIT II
LEEWARD SECTION

SCALE: AS SHOWN DATE:

SHEET NO. 6V7B OF 14 SHEETS

C.O. 877S-2

ORIGINAL PLAN | SURVEY PLOTTED BY | DRAWN BY | TRACED BY | DESIGNED BY | QUANTITIES BY | CHECKED BY | DATE
NOTE BOOK No.

CAD by J. Mimura, 55-52

Last Saved: J:\H3RF\RFU2\CO\SIGN\Co-e54.dwg.dwg 07/15/98 at 18:05

FED. ROAD DIST. NO.	STATE	FED. AID PROJ. NO.	FISCAL YEAR	SHEET NO.	TOTAL SHEETS
HAWAII	HAW.	I-H3-1(75), UNIT II	1997	878	1102

LEGEND

Exist. Sign to be removed

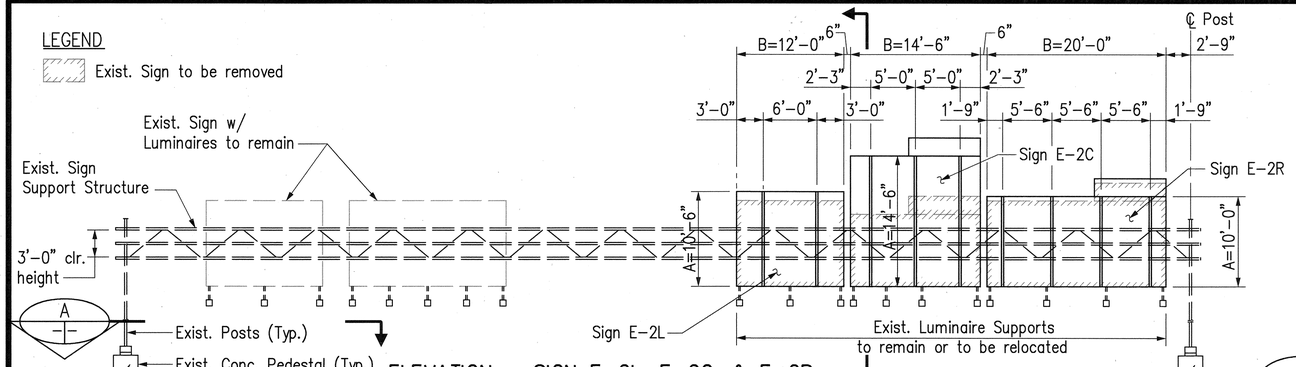

ELEVATION – SIGN E-2L, E-2C, & E-2R
MOANALUA FREEWAY INBOUND STA. 136+80
Scale: 1/8" = 1'-0"

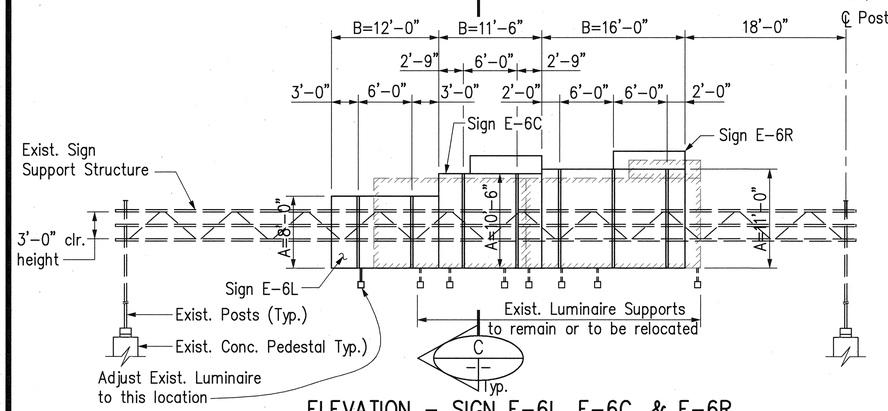

ELEVATION – SIGN E-6L, E-6C, & E-6R
MOANALUA FREEWAY INBOUND STA. 158+90
Scale: 1/8" = 1'-0"

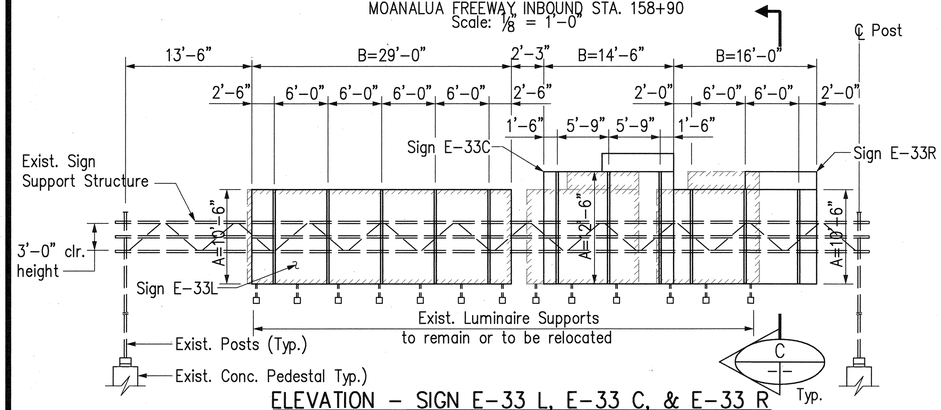

ELEVATION – SIGN E-33 L, E-33 C, & E-33 R
INTERSTATE ROUTE H-1 OUTBOUND STA. 6+05
Scale: 1/8" = 1'-0"

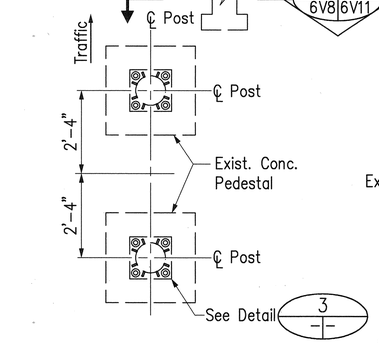

SECTION A
Scale: 1/2" = 1'-0"

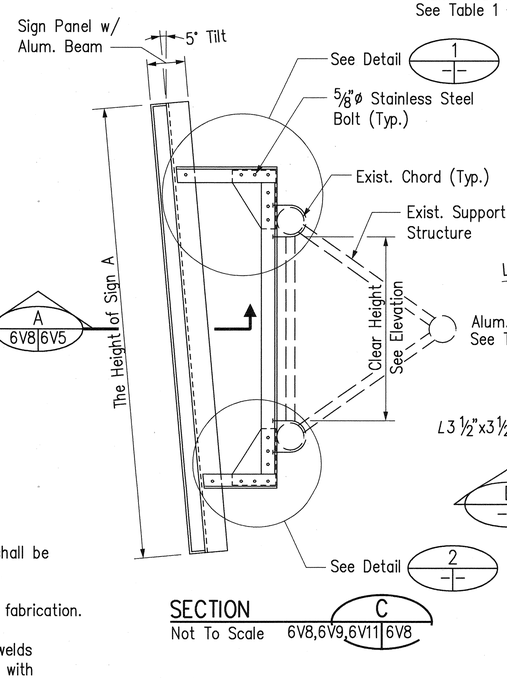

SECTION C
Not To Scale

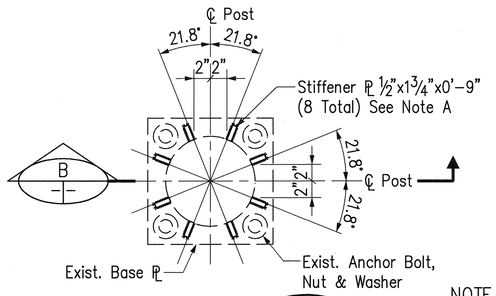

DETAIL 3
Scale: 1 1/2" = 1'-0"

NOTE A

The locations of Stiffener PL's shall be located to avoid interfering with existing anchor bolts, nuts and washers.

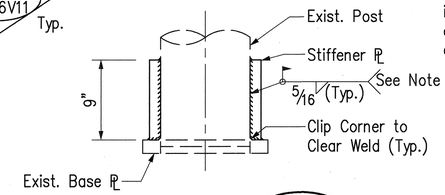

SECTION B
Scale: 1 1/2" = 1'-0"

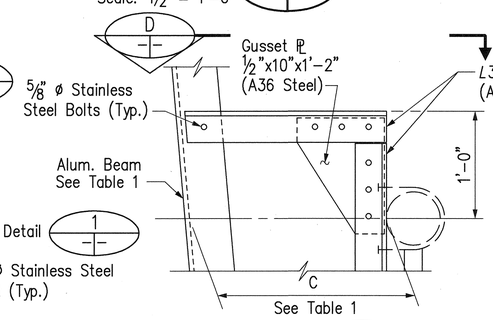

DETAIL 1
Not To Scale

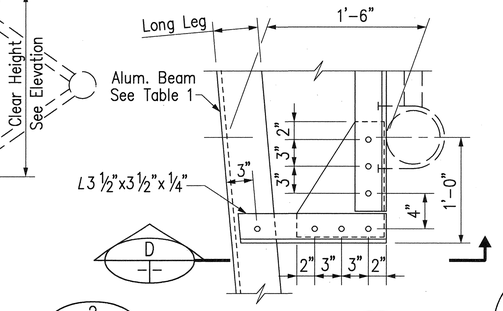

DETAIL 2
Not To Scale

FED. ROAD DIST. NO.	STATE	FED. AID PROJ. NO.	FISCAL YEAR	SHEET NO.	TOTAL SHEETS
HAWAII	HAW.	I-H3-1(75), UNIT II	1997	878	1102

TABLE 1

SIGN	CHORD O.D.* MAX.	CHORD O.D.* MIN.	"C"	ALUMINUM BEAM
E-2L	8.25"	6.15"	1'- 9 3/4"	L 5"X3"X1/2"
E-2C	8.25"	6.15"	1'- 9 3/4"	L 6"X3 1/2"X1/2"
E-2R	6.17"	4.06"	1'- 9 5/8"	L 5"X3"X1/2"
E-6L	7.06"	6.15"	1'- 9 3/4"	L 5"X3"X1/2"
E-6C	7.06"	6.15"	1'- 9 3/4"	L 5"X3"X1/2"
E-6R	7.06"	4.18"	1'- 9 5/8"	L 5"X3"X1/2"
E-8L	6.63"	6.63"	2'- 0 5/16"	L 5"X3"X1/2"
E-8C	6.63"	6.63"	2'- 0 5/16"	L 6"X3 1/2"X1/2"
E-8R	6.63"	6.63"	2'- 0 5/16"	L 6"X3 1/2"X1/2"
E-15L	4.5"	4.5"	1'- 10 3/16"	L 5"X3"X1/2"
E-15C	4.5"	4.5"	1'- 10 3/16"	L 5"X3"X1/2"
CMS 42	4.5"	4.5"	1'- 10 3/16"	**
E-27L	4.5"	4.5"	1'- 10 3/16"	L 5"X3"X1/2"
E-27C	4.5"	4.5"	1'- 10 3/16"	L 5"X3"X1/2"
E-27R	4.5"	4.5"	1'- 10 3/16"	L 5"X3"X1/2"
E-30L	4.5"	4.5"	1'- 10 3/16"	L 6"X3 1/2"X1/2"
E-30R	4.5"	4.5"	1'- 10 3/16"	L 5"X3"X1/2"
E-33L	7.06"	4.06"	1'- 9 5/8"	L 6"X3 1/2"X1/2"
E-33C	7.06"	4.18"	1'- 9 5/8"	L 5"X3"X1/2"
E-33R	6.15"	4.18"	1'- 9 5/8"	L 5"X3"X1/2"
CMS 40	4.5"	4.5"	1'- 10 3/16"	**
E-40C	4.5"	4.5"	1'- 10 3/16"	L 6"X3 1/2"X1/2"
E-40R	4.5"	4.5"	1'- 10 3/16"	L 5"X3"X1/2"
CMS 41	4.5"	4.5"	1'- 10 3/16"	**
E-41R	4.5"	4.5"	1'- 10 3/16"	L 6"X3 1/2"X1/2"

* The Chord O.D. (Outside Diameters) shown are approximate and shall be verified in field prior to fabrication of U-Bolts
**CMS sign panels are state furnished. For assembling and mounting details, see sheet no. SY-98

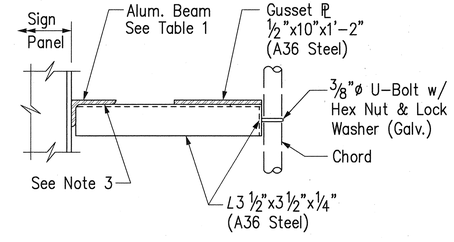

SECTION D
Not To Scale

NOTES:

1. All existing sign panel mounting brackets at the designated sign locations, if any, shall be removed and replaced by sign panel mounting brackets as shown.
2. The dimensions for height of existing truss and locations of sign panel mounting brackets shall be verified in field prior to fabrication of sign panel and mounting bracket.
3. Contact surface between structural steel aluminum shall be separated with a minimum 1/16" thick neoprene gasket.
4. All structural steel shall be hot-dip galvanized after fabrication.
5. The damaged existing galvanized coatings and field welds shall be repaired with field galvanizing in accordance with standard specifications.

Date	Revision
10/10/97	Revised Support Spacing for Sign E-2C in elevation, Sign E-2L, E-2C, E-2R.
4/21/97	Added Section E

STATE OF HAWAII
DEPARTMENT OF TRANSPORTATION
HIGHWAYS DIVISION

DESTINATION SIGNS
EXISTING SIGN STRUCTURES
SIGN MOUNTING DETAILS – 1

H-3 FINISH (UNIT II)
FAIP NO. I-H3-1(75), UNIT II
LEEWARD SECTION

SCALE: AS SHOWN DATE: JANUARY 1997

HUI PANG CHEN
LICENSED PROFESSIONAL ENGINEER
No. 3865-S
HAWAII, U.S.A.

THIS WORK WAS PREPARED BY ME OR UNDER MY SUPERVISION.

SHEET NO. 6V8 OF 14 SHEETS

ORIGINAL PLAN | SURVEY PLOTTED BY | DRAWN BY | TRACED BY | DESIGNED BY | QUANTITIES BY | CHECKED BY | DATE
NOTE BOOK | No.

CAD by D. Burgess, SS-52

Last Saved: J:\H3RF\RFU2\CO\SIGN\CO-SMD-1.dwg 10/09/97 at 12:08

C.O. ADD. 878

FED. ROAD DIST. NO.	STATE	FED. AID PROJ. NO.	FISCAL YEAR	SHEET NO.	TOTAL SHEETS
HAWAII	HAW.	I-H3-1(75), UNIT II	1997	879	1102

LEGEND

Exist. Sign to be removed

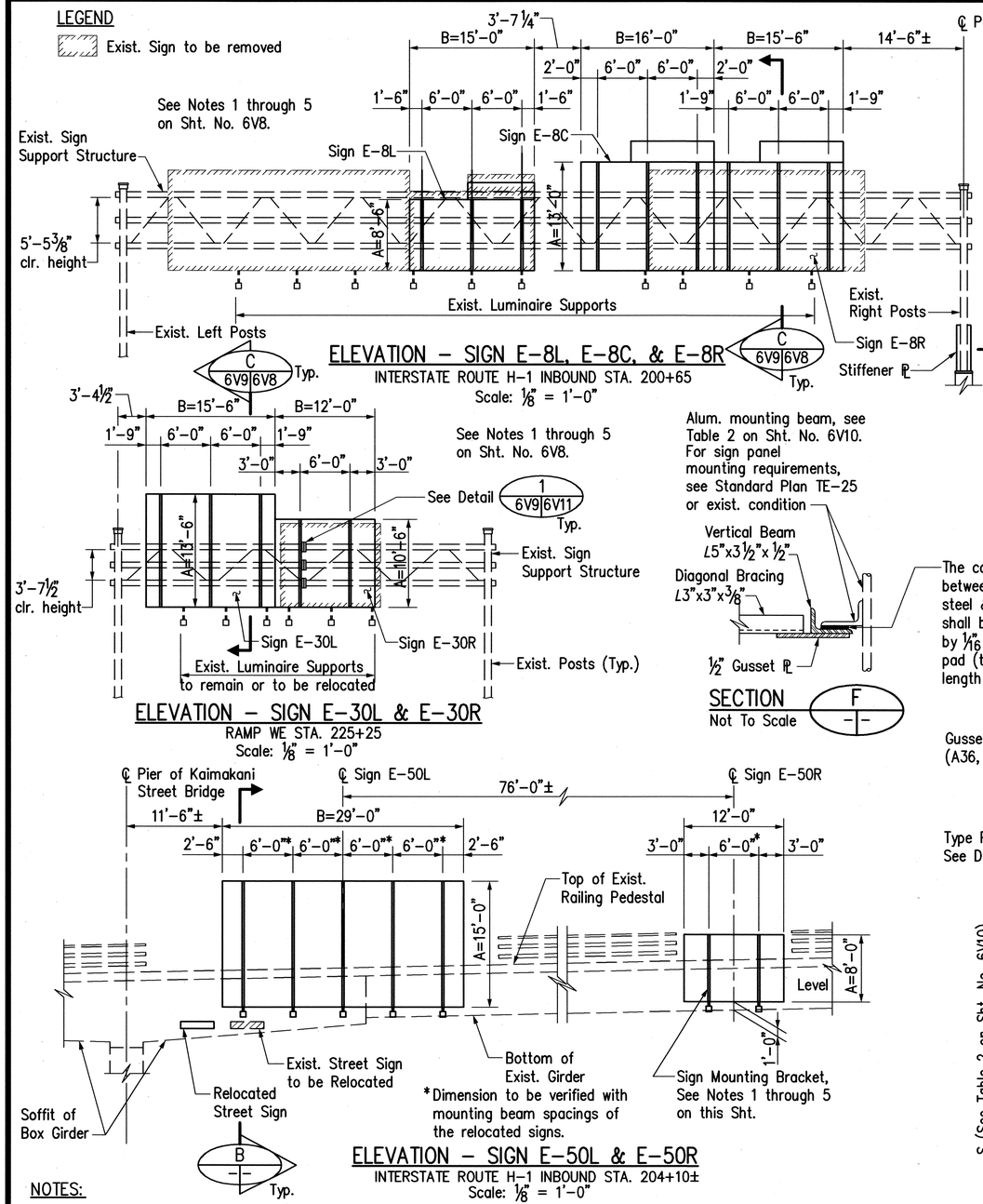

ELEVATION – SIGN E-8L, E-8C, & E-8R

INTERSTATE ROUTE H-1 INBOUND STA. 200+65

Scale: ⅛" = 1'-0"

ELEVATION – SIGN E-30L & E-30R

RAMP WE STA. 225+25

Scale: ⅛" = 1'-0"

ELEVATION – SIGN E-50L & E-50R

INTERSTATE ROUTE H-1 INBOUND STA. 204+10±

Scale: ⅛" = 1'-0"

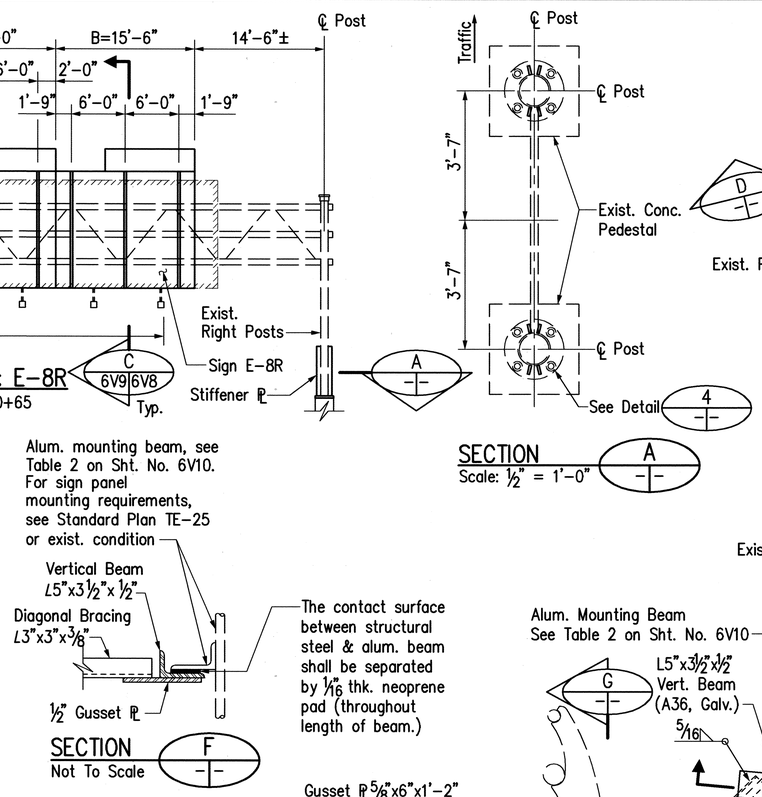

SECTION A

Scale: ½" = 1'-0"

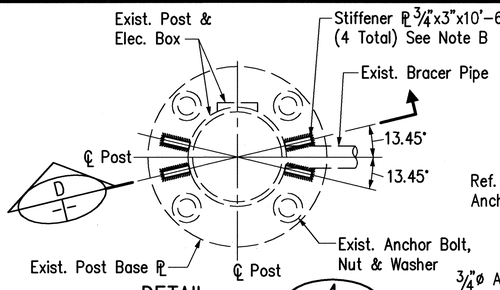

DETAIL 4

Scale: 1½" = 1'-0"

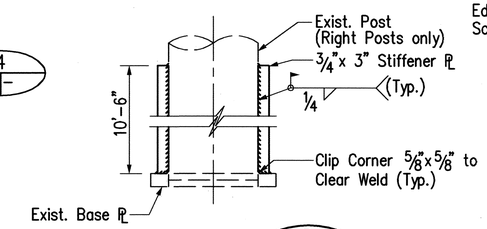

SECTION D

Scale: 1½" = 1'-0"

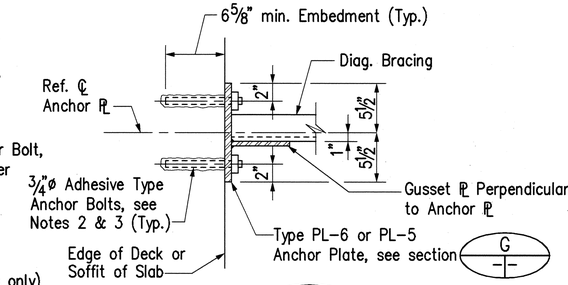

SECTION E

Scale: 1½" = 1'-0"

NOTE B

The locations of Stiffener PL's shall be located to avoid interfering with existing anchor bolts, nuts, washers and bracer pipes.

SECTION F

Not To Scale

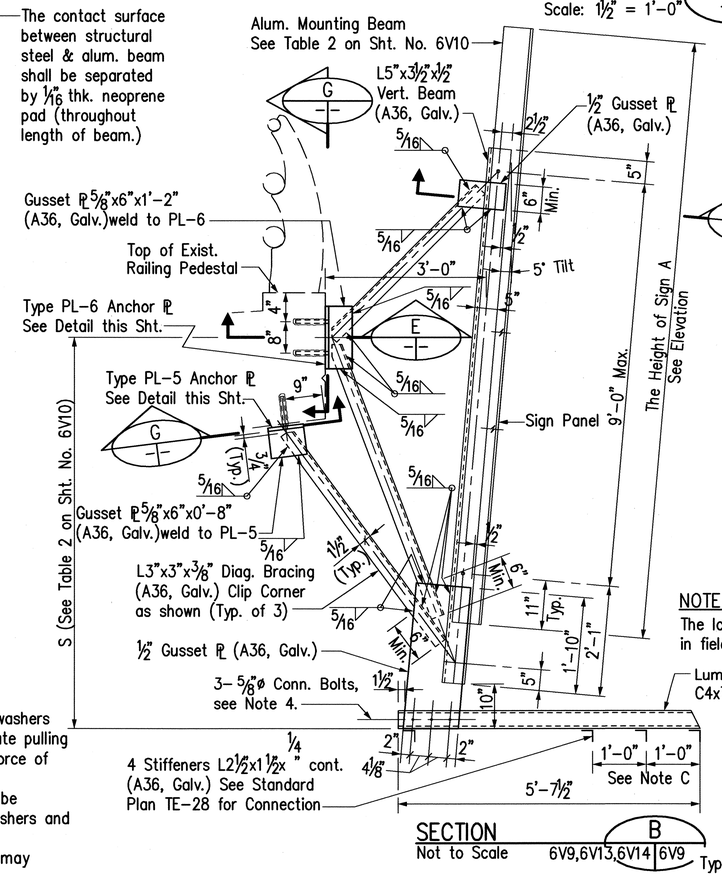

SECTION B

Not to Scale

6V9,6V13,6V14 6V9 Typ.

NOTE C

The location of angle may be adjusted in field for luminaire mounting.

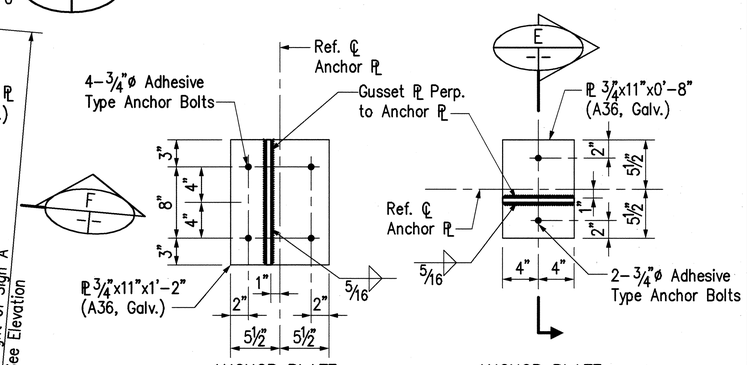

ANCHOR PLATE TYPE PL-6

ANCHOR PLATE TYPE PL-5

SECTION G

Scale: 1½" = 1'-0"

NOTES:

1. Prior to fabrication of sign supports, the Contractor shall install the adhesive type anchor bolts in accordance with Note 2 and the bolts pattern as shown. The spacings of sign supports as shown shall be verified with the anchor bolt installed and adjusted accordingly.
2. The Contractor shall avoid cutting existing rebars during drill. When the drill contacts any existing rebars, the hole shall be filled with epoxy grout and a replacement hole shall be drilled so that the anchor bolt pattern is maintained. The adhesive type anchor shall be installed per recommendation of manufacturer.
3. The ¾"ø adhesive type anchor bolt with hex nut and washers shall be stainless steel and develop a minimum ultimate pulling force of 28,000 lbs. and a minimum ultimate shear force of 27,000 lbs.
4. The ⅝"ø connection bolts for mounting brackets shall be ASTM A325 High Strength bolts with hex nuts and washers and shall all be hot-dipped galvanized.
5. The required bolt holes in aluminum mounting beams may be field drilled.

Date	Revision
12/3/97	Revised Luminaire Support Stiffeners on Section B. Added Note C.
10/10/97	Modified Mounting Beam Note in Section F. Modified Dimensions in Section B.

STATE OF HAWAII
DEPARTMENT OF TRANSPORTATION
HIGHWAYS DIVISION

DESTINATION SIGNS
EXISTING SIGN STRUCTURES
SIGN MOUNTING DETAILS – 2

H-3 FINISH (UNIT II)
FAIP NO. I-H3-1(75), UNIT II
LEEWARD SECTION

SCALE: AS SHOWN DATE:

HUI PANG CHEN
LICENSED PROFESSIONAL ENGINEER
No. 3865-S
HAWAII, U.S.A.

THIS WORK WAS PREPARED BY ME OR UNDER MY SUPERVISION.

SHEET NO. 6V9 OF 14 SHEETS

C.O. 879

ORIGINAL PLAN | SURVEY PLOTTED BY | DRAWN BY | TRACED BY | DESIGNED BY | QUANTITIES BY | CHECKED BY | DATE | NOTE BOOK | No.

CAD by D. Burgess, 55-52

Last Saved: J:\H3RF\RFU2\CO\SIGN\CO-SMD-2.dwg 12/03/97 at 15:39

FED. ROAD DIST. NO.	STATE	FED. AID PROJ. NO.	FISCAL YEAR	SHEET NO.	TOTAL SHEETS
HAWAII	HAW.	I-H3-1(75), UNIT II	1997	C.O. 880	1102

LEGEND

Exist. Sign to be removed

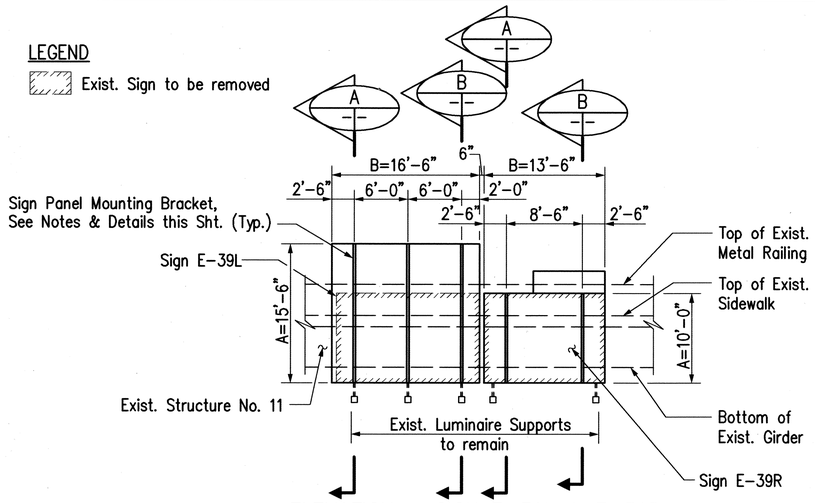

ELEVATION – SIGN E-39L & E-39R

RAMP ES 50+13

Scale: 1/8" = 1'-0"

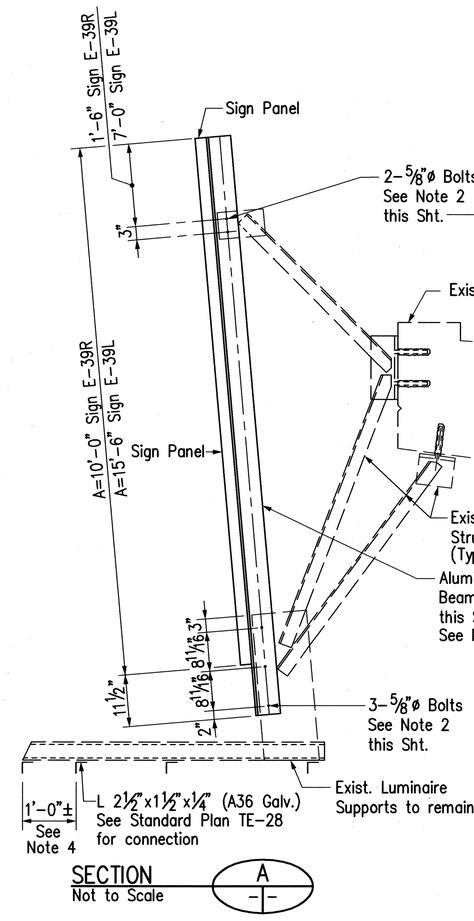

SECTION A

Not to Scale

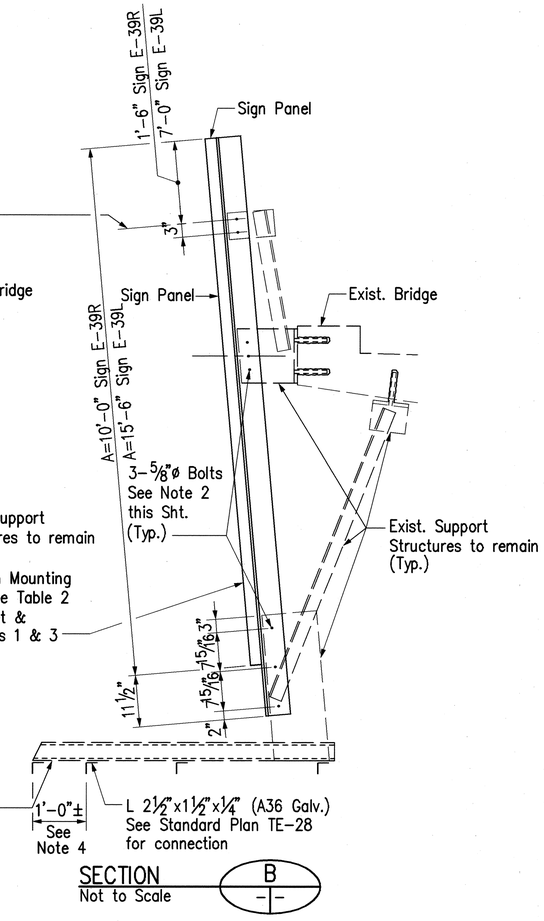

SECTION B

Not to Scale

TABLE 2

Sign	Alum. Mounting Beam	S (ft)-(in)
E-17L	L 6x3 1/2x1/2	5'-3"
E-17C	L 6x3 1/2x1/2	5'-3"
E-17R	L 6x3 1/2x1/2	5'-3"
E-50L	L 5x3x1/2	5'-3"
E-50R	L 5x3x1/2	5'-3"
E-64L	L 6x3 1/2x1/2	3'-8"
E-64R	L 6x3 1/2x1/2	3'-8"
E-68L	L 6x3 1/2x1/2	6'-6"
E-68R	L 5x3x1/2	6'-6"
E-74R	L 6x3 1/2x1/2	6'-6"
E-39L	C 6x3x5.77	Exist.
E-39R	L 6x3 1/2x1/2	Exist.

NOTES:

1. All existing sign panel and aluminum mounting beams at the designated sign locations shall be removed and replaced by the aluminum beams and sign panels as shown. The locations of the sign panel mounting bracket bolt holes in the aluminum mounting beams shall be verified in field prior to fabrication of members.
2. Provide 5/8"øx2"± long High Strength Bolts with hex nuts and hard plate washers (A325, Galv.), and 1/16" thick of neoprene pads at the contact surface between structural steel and aluminum at the locations as shown. The removed connection bolts and neoprene pads shall not be reused. The lengths and locations of connection bolts shall be verified in field.
3. The bolt holes in aluminum mounting beam may be field drilled.
4. The location of angle may be adjusted in field for luminaire mounting.

ORIGINAL PLAN	SURVEY PLOTTED BY	DATE
	DRAWN BY	
	TRACED BY	
NOTE BOOK	DESIGNED BY	
	QUANTITIES BY	
No.	CHECKED BY	

CAD by D. Burgess, 55-52

Last Saved: J:\H3RF\RFU2\CO\SIGN\CO-SMD-3.dwg 12/03/97 at 15:05

HUI PANG CHEN
LICENSED PROFESSIONAL ENGINEER
No. 3865-S
HAWAII, U.S.A.

THIS WORK WAS PREPARED BY ME OR UNDER MY SUPERVISION.

Huipang Chen

Date	Revision
12/3/97	Added one Luminaire Support Stiffener on Sections A & B. Added Note 4.
10/10/97	Revised Support Spacing for Sign E-39R. Added Table 2, modified dimensions in Sections A & B.

STATE OF HAWAII
DEPARTMENT OF TRANSPORTATION
HIGHWAYS DIVISION

DESTINATION SIGNS
EXISTING SIGN STRUCTURES
SIGN MOUNTING DETAILS – 3

H-3 FINISH (UNIT II)
FAIP NO. I-H3-1(75), UNIT II
LEEWARD SECTION

SCALE: AS SHOWN DATE:

SHEET NO. 6V10 OF 14 SHEETS

C.O. 880

FED. ROAD DIST. NO.	STATE	FED. AID PROJ. NO.	FISCAL YEAR	SHEET NO.	TOTAL SHEETS
HAWAII	HAW.	I-H3-1(75), UNIT II	1997	881	1102

LEGEND

Exist. Sign to be removed

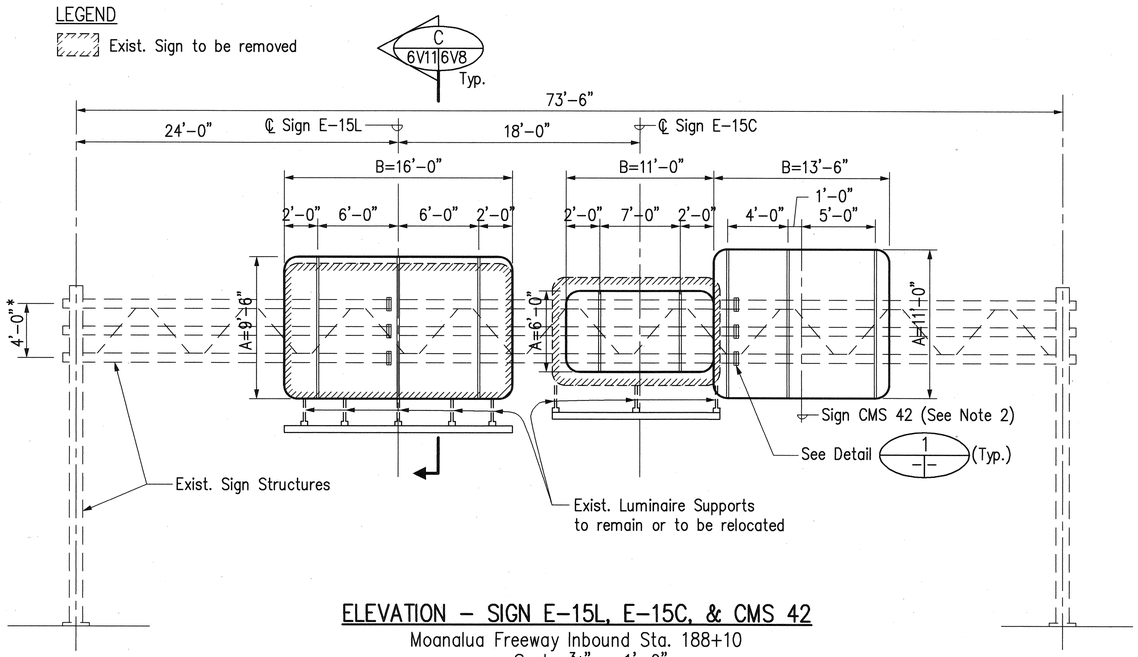

ELEVATION – SIGN E-15L, E-15C, & CMS 42

Moanalua Freeway Inbound Sta. 188+10
Scale: 3/16" = 1'-0"

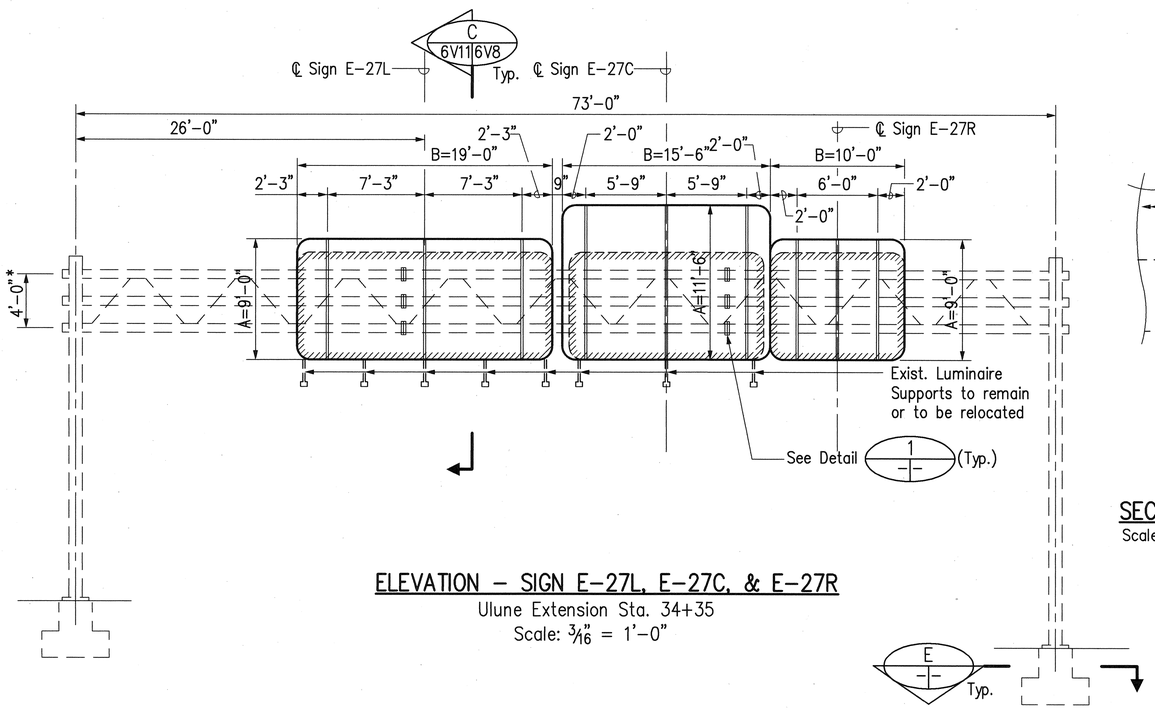

ELEVATION – SIGN E-27L, E-27C, & E-27R

Ulune Extension Sta. 34+35
Scale: 3/16" = 1'-0"

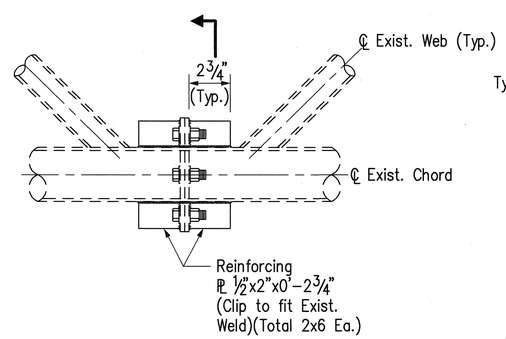

DETAIL 1

Not to Scale 6V9,6V11,6V12 6V11

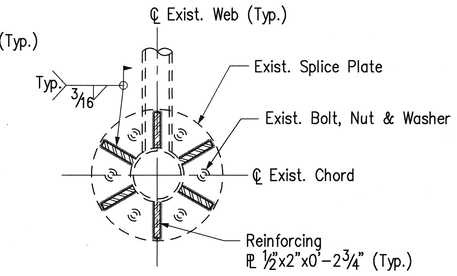

SECTION A

Not to Scale

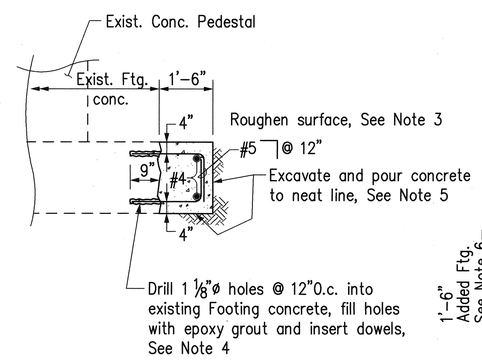

SECTION D

Scale: 1/2" – 1'-0"

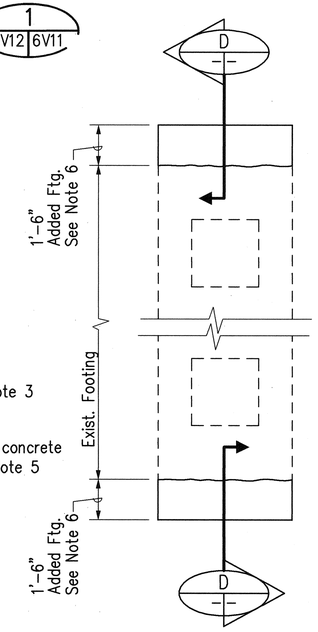

SECTION E

Scale: 3/8" – 1'-0" 6V8,6V11,6V12 6V11

LEGEND

Exist. Sign to be removed

NOTE:

1. See Notes 1 through 5 on Sht. No. 6V8.
2. CMS Panel and Mounting Brackets for CMS 42 are State-Furnished. For assembly and mounting details see Sht. No. SY-98.
3. The interface between new and old concrete shall be clean, free of laitance and roughened to a full amplitude of approximately 1/4".
4. The contractor shall avoid cutting the existing rebars during drill. When the drill contacts any existing rebar, the holes shall be filled with epoxy grout and replacement hole shall be drilled so that the spacing of dowels to be maintained. Minimum edge distance to ℄ of drill hole shall be 4".
5. Spread footings shall be excavated and poured to neat line. In case of over excavation, space between footing and ground shall be filled with concrete at the Contractor's expense and as directed by the Engineer. The minimum quality of the fill concrete shall be class D.
6. Payment for added footing including excavation, concrete and rebars for "Sign Structure E-2L, E-2C & E-2R", "Sign Structure E-27L, E-27C & E-27R" and "Sign Structure E-40C, E-40R & CMS-40" shall be incidental to the corresponding pay item "Sign Structure E-___, E-___ & E-___."

HUI PANG CHEN
LICENSED PROFESSIONAL ENGINEER
No. 3865-S
HAWAII, U.S.A.

THIS WORK WAS PREPARED BY ME OR UNDER MY SUPERVISION.

Hui Pang Chen

Date	Revision
4/21/97	Added Foundation Details & Section E

STATE OF HAWAII
DEPARTMENT OF TRANSPORTATION
HIGHWAYS DIVISION

DESTINATION SIGNS
EXISTING SIGN STRUCTURES
SIGN MOUNTING DETAILS – 4

H-3 FINISH (UNIT II)
FAIP NO. I-H3-1(75), UNIT II
LEEWARD SECTION

SCALE: AS SHOWN DATE: JANUARY 1997

SHEET NO. 6V11 OF 14 SHEETS

ADD. 881

ORIGINAL PLAN	SURVEY PLOTTED BY	DATE
	DRAWN BY	
NOTE BOOK	TRACED BY	
	DESIGNED BY	
No.	QUANTITIES BY	
	CHECKED BY	

CAD by D. Burgess, 53-52

Last Saved: J:\H3RF\RFU2\SIGN\SLO-MISC.dwg 04/18/97 at 07:48

FED. ROAD DIST. NO.	STATE	FED. AID PROJ. NO.	FISCAL YEAR	SHEET NO.	TOTAL SHEETS
HAWAII	HAW.	I-H3-1(75), UNIT II	1997	882	1102

LEGEND

Exist. Sign to be removed

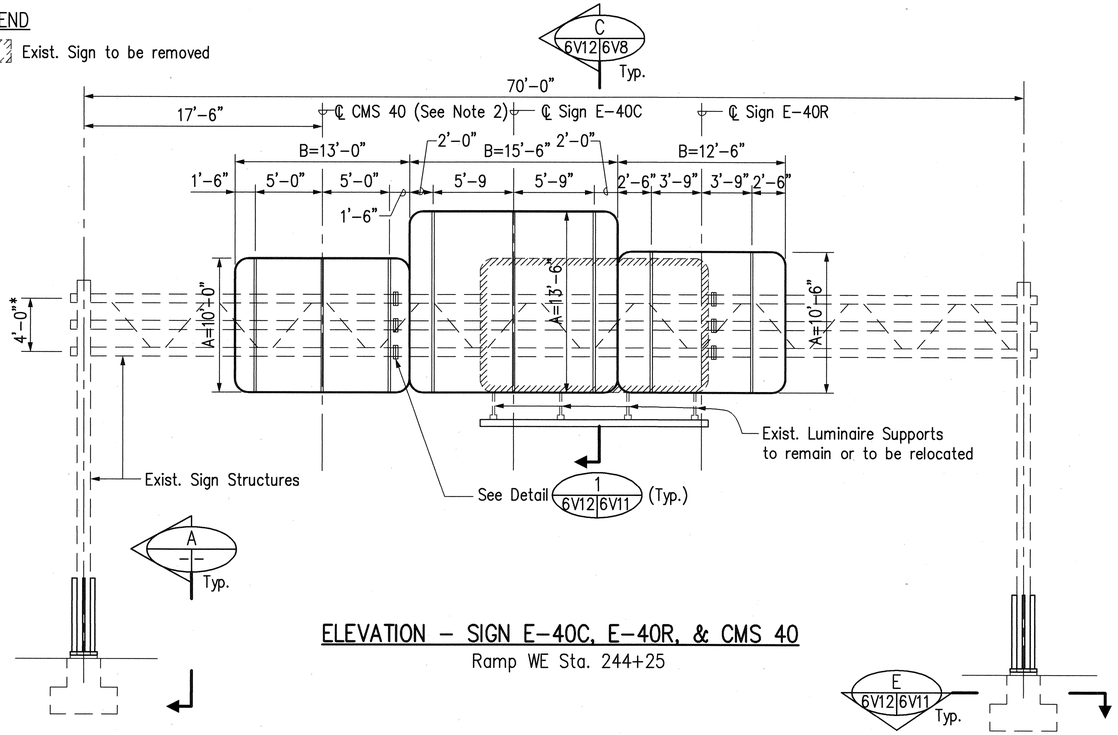

ELEVATION – SIGN E-40C, E-40R, & CMS 40

Ramp WE Sta. 244+25

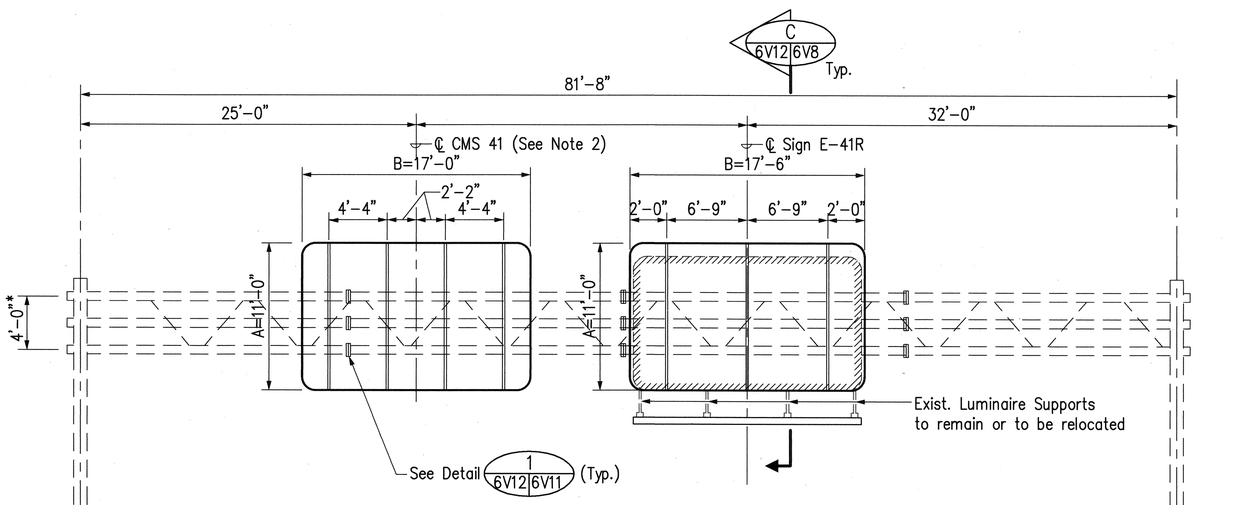

ELEVATION – SIGN E-41R & CMS 41

Ramp P Sta. 12+00 (Existing E-38)

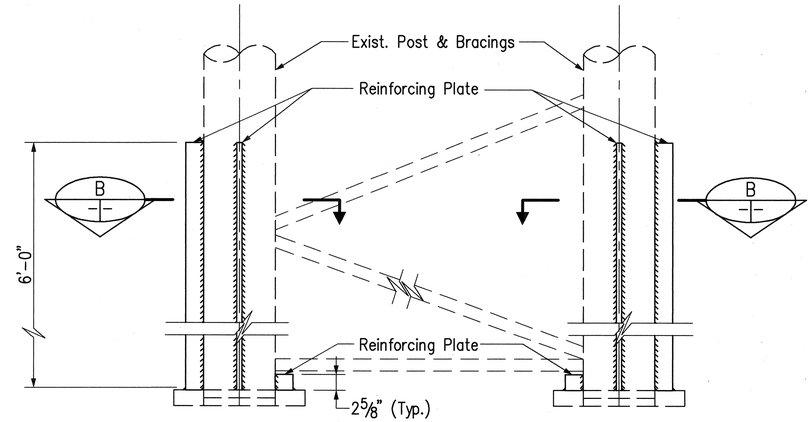

SECTION A
Not to Scale

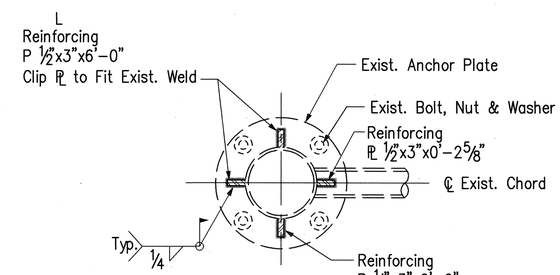

SECTION B
Not to Scale

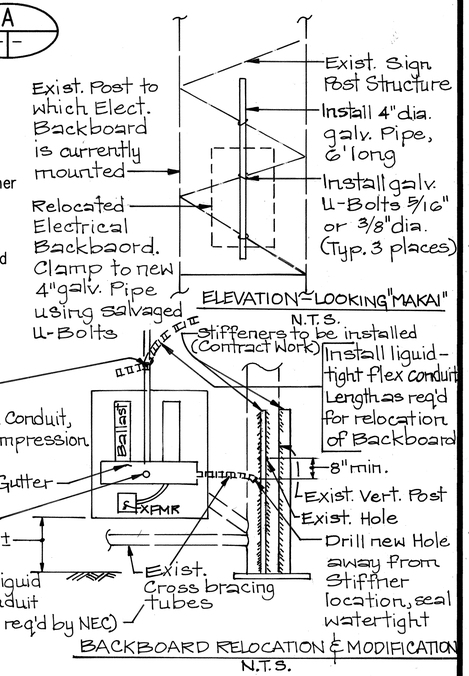

NOTE:

1. See Notes 1 through 5 on Sht. No. 6V8.
2. CMS Sign Panel and Mounting Brackets for CMS 42 are State-Furnished. For assembly and mounting details see Sht. No. SY-98.

HUI PANG CHEN
LICENSED PROFESSIONAL ENGINEER
No. 3865-S
HAWAII, U.S.A.

THIS WORK WAS PREPARED BY ME OR UNDER MY SUPERVISION.

Hui Pang Chen

Date	Revision
4/21/97	Added Section E

STATE OF HAWAII
DEPARTMENT OF TRANSPORTATION
HIGHWAYS DIVISION

DESTINATION SIGNS
EXISTING SIGN STRUCTURES
SIGN MOUNTING DETAILS – 5

H-3 FINISH (UNIT II)
FAIP NO. I-H3-1(75), UNIT II
LEEWARD SECTION

SCALE: 3/16' = 1'-0" DATE: JANUARY 1997

SHEET NO. 6V12 OF 14 SHEETS

ADD. 882

ORIGINAL PLAN | SURVEY PLOTTED BY | DRAWN BY | TRACED BY | DESIGNED BY | QUANTITIES BY | CHECKED BY | DATE | NOTE BOOK No.

CAD by D. Burgess, 55-52

Last Saved: J:\H3RF\RFU2\SIGN\SLOMISC2.dwg 04/16/97 at 17:47

FED. ROAD DIST. NO.	STATE	FED. AID PROJ. NO.	FISCAL YEAR	SHEET NO.	TOTAL SHEETS
HAWAII	HAW.	I-H3-1(75), UNIT II	1997	883	1102

NOTE:

See Notes 1 through 5 on Sht. No. 6V9.

LEGEND

Exist. Sign to be removed

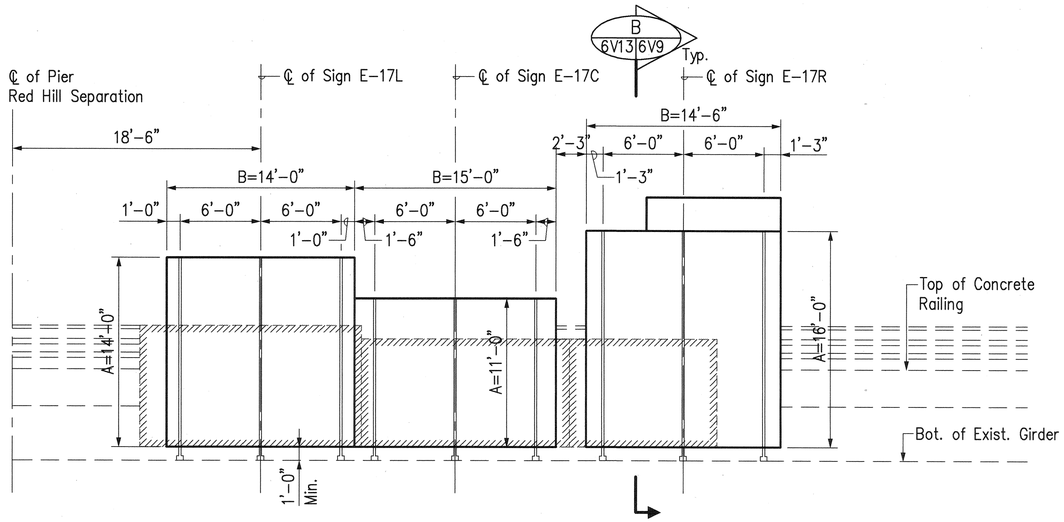

ELEVATION – SIGN E-17L, E-17C, & E-17R

Moanalua Freeway Sta. 226+00±

Scale: 3/16" = 1'-0"

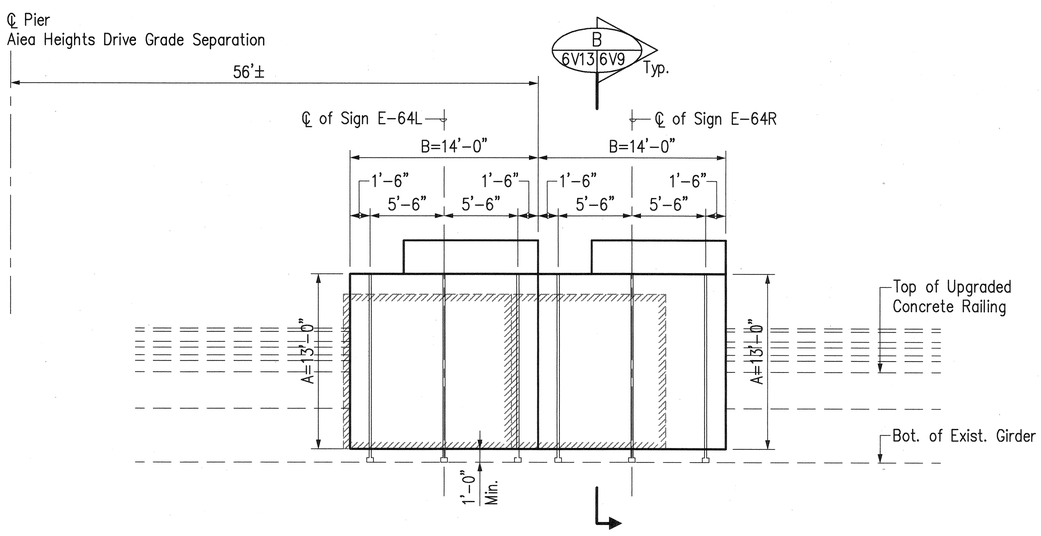

ELEVATION – SIGN E-64L & E-64R

Interstate Route H-1 Inbound Sta. 191+88±

Scale: 3/16" = 1'-0"

ORIGINAL PLAN | SURVEY PLOTTED BY | DRAWN BY | TRACED BY | DESIGNED BY | QUANTITIES BY | CHECKED BY | DATE

NOTE BOOK No.

CAD by D. Burgess, 55-52

Last Saved: J:\H3RF\RFU2\SIGN\SLOMISC4.dwg 03/02/97 at 15:36

HUI PANG CHEN
LICENSED PROFESSIONAL ENGINEER
No. 3865-S
HAWAII, U.S.A.

THIS WORK WAS PREPARED BY ME OR UNDER MY SUPERVISION.

Huipang Chen

STATE OF HAWAII
DEPARTMENT OF TRANSPORTATION
HIGHWAYS DIVISION

DESTINATION SIGNS
EXISTING SIGN STRUCTURES
SIGN MOUNTING DETAILS – 6

H-3 FINISH (UNIT II)
FAIP NO. I-H3-1(75), UNIT II
LEEWARD SECTION

SCALE: 3/16" = 1'-0" DATE: JANUARY 1997

SHEET NO. 6V13 OF 14 SHEETS

883

FED. ROAD DIST. NO.	STATE	FED. AID PROJ. NO.	FISCAL YEAR	SHEET NO.	TOTAL SHEETS
HAWAII	HAW.	I-H3-1(75), UNIT II	1997	884	1102

NOTES:

1. See Notes 1 through 5 on Sht No. 6V9.
2. The existing sign panels, sign panel mounting brackets, and luminaire supports while interfere with the new sign mounting brackets shall be removed.

LEGEND:

Exist. Structure to be removed

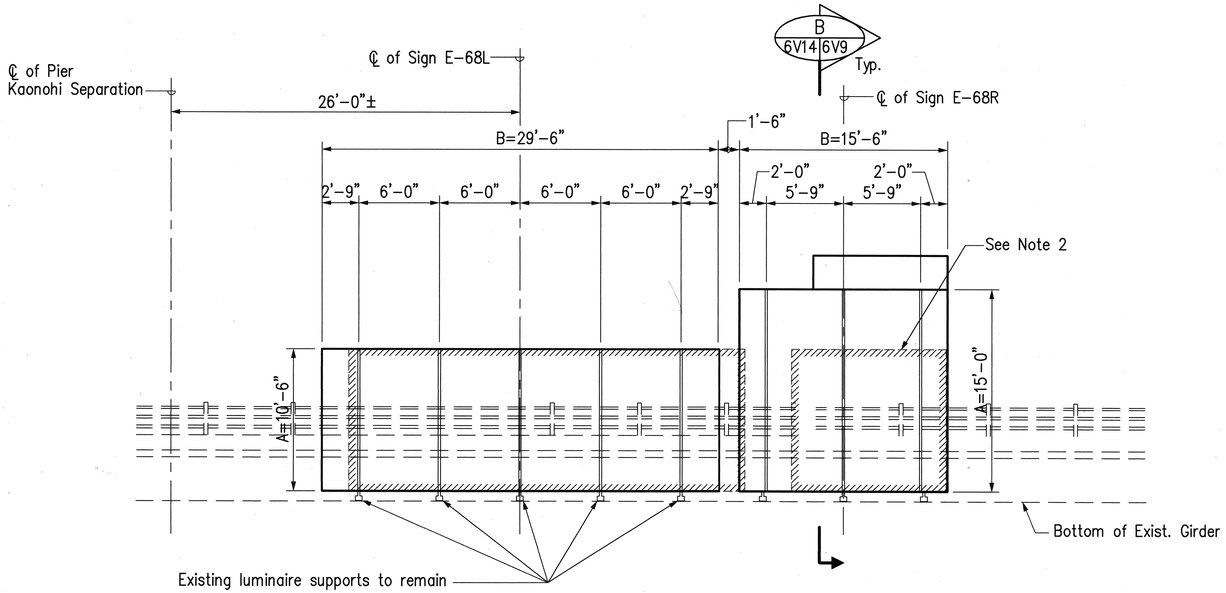

ELEVATION – SIGN E-68L & E-68R

Interstate Route H-1 Inbound Sta. 138+75±

Scale: 3/16" = 1'-0"

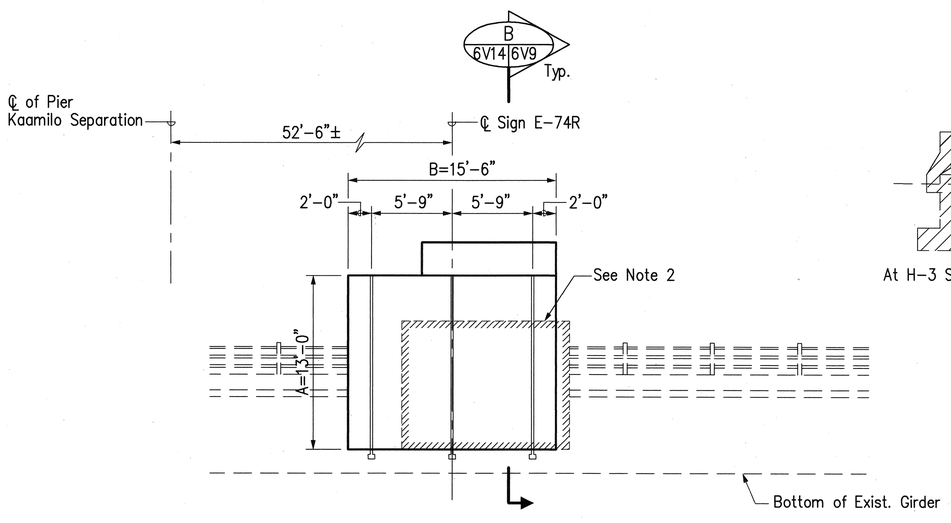

ELEVATION – SIGN E-74R

Interstate Route H-1 Inbound Sta. 172+38±

Scale: 3/16" = 1'-0"

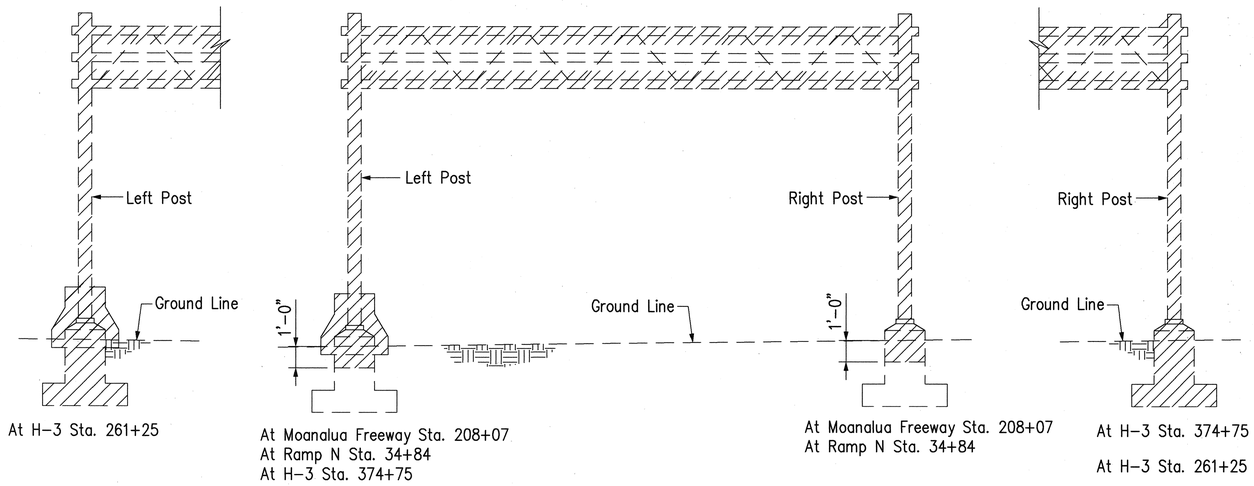

REMOVAL OF EXISTING SIGN STRUCTURE

N.T.S.

Date	Revision
4/21/97	Revised Removal of Exist. Structures

STATE OF HAWAII
DEPARTMENT OF TRANSPORTATION
HIGHWAYS DIVISION

DESTINATION SIGNS
EXISTING SIGN STRUCTURES
SIGN MOUNTING DETAILS – 7

H-3 FINISH (UNIT II)
FAIP NO. I-H3-1(75), UNIT II
LEEWARD SECTION

SCALE: AS SHOWN DATE: JANUARY 1997

HUI PANG CHEN
LICENSED PROFESSIONAL ENGINEER
No. 3865-S
HAWAII, U.S.A.

THIS WORK WAS PREPARED BY ME OR UNDER MY SUPERVISION.

Hui Pang Chen

SHEET NO. 6V14 OF 14 SHEETS

ADD. 884

ORIGINAL PLAN
SURVEY PLOTTED BY
DRAWN BY
TRACED BY
DESIGNED BY
QUANTITIES BY
CHECKED BY
DATE
NOTE BOOK
No.

CAD by D. Burgess, 55-52

Last Saved: J:\H3RF\RFU2\SIGN\SLOMISC3.dwg 04/16/97 at 17:52

FED. ROAD DIST. NO.	STATE	FED. AID PROJ. NO.	FISCAL YEAR	SHEET NO.	TOTAL SHEETS
HAWAII	HAW.	I-H3-1(75), UNIT II	1997	C.O. 884S-1	1102

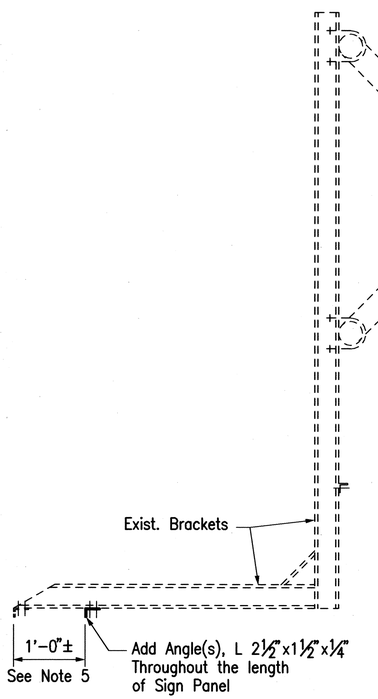

TYPE I

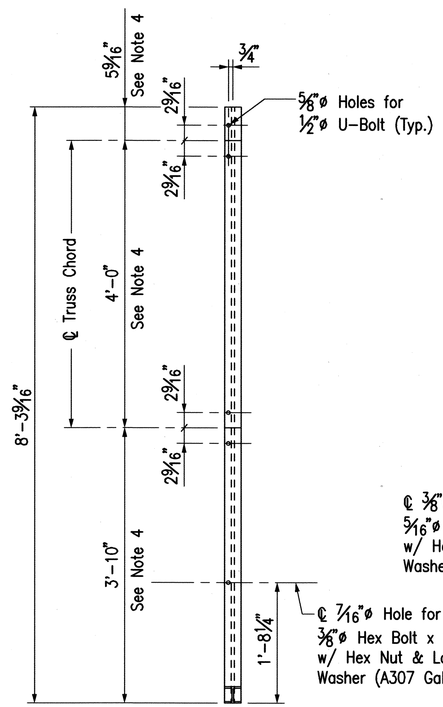

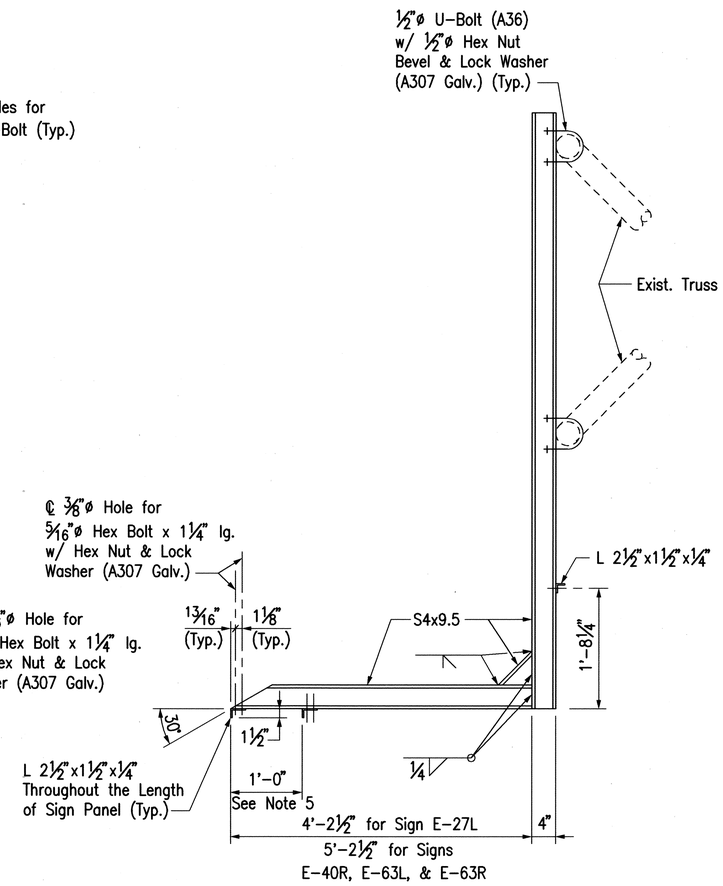

TYPE II

LUMINAIRE MOUNTING BRACKET MODIFICATION

SIGN	TYPE I	TYPE II
E-2L	X	–
E-2C	X	–
E-2R	X	–
E-6L	X	–
E-6C	X	–
E-6R	X	–
E-8L	X	–
E-8C	X	–
E-8R	X	–
E-15L	X	–
E-15C	X	–
CMS 42	–	–
E-27L	–	3*
E-27C	X	–
E-27R	X	–
E-30L	X	–
E-30R	X	–
E-33L	X	–
E-33C	X	–
E-33R	X	–
CMS 40	–	–
E-40C	X	–
E-40R	–	3*
CMS 41	–	–
E-41R	X	–
E-62L	–	**
E-62R	–	**
E-63L	–	3*
E-63R	–	3*

LEGEND

– Modification not required

X Modification required

* Number of brackets required

** Existing luminaire mounting brackets to be relocated per locations specified in Electrical Drawings.

*** Dimensions to be verified in field.

SIGN PANEL MOUNTING BRACKETS

Sign	Chord O.D. Max.	Chord O.D. Min.	"C"	Aluminum Beam
E-62L	4.5"***	4.5"***	1'-10 3/16"	L 5"X3"X1/2"
E-62R	4.5"***	4.5"***	1'-10 3/16"	L 5"X3"X1/2"
E-63L	4.5"	4.5"	1'-10 3/16"	L 6"X3 1/2"X1/2"
E-63R	4.5"	4.5"	1'-10 3/16"	L 5"X3"X1/2"

LUMINAIRE MOUNTING BRACKET MODIFICATION

1" = 1'-0"

NOTES:

1. For Sign Panel Mounting Bracket Details, see Section C and Notes on Sht. No. C.O. ADD. 878.
2. For location of signs E-62L, E-62R, E-63L, & E-63R, see Sht. No. 865.
3. For sign assembly and bracket spacing, see Standard Plan TE-25.
4. Dimensions to be verified and adjusted in field to match the existing brackets.
5. Location of angle may be adjusted in field for luminaire mounting.
6. All structural steel shall be ASTM A36, hot-dipped galvanized after fabrication.

HUI PANG CHEN
LICENSED PROFESSIONAL ENGINEER
No. 3865-S
HAWAII, U.S.A.

THIS WORK WAS PREPARED BY ME OR UNDER MY SUPERVISION.

Hui Pang Chen

Date	Revision
12/3/97	Added Sheet

STATE OF HAWAII
DEPARTMENT OF TRANSPORTATION
HIGHWAYS DIVISION

DESTINATION SIGNS
EXISTING SIGN STRUCTURES
SIGN MOUNTING DETAILS-8

H-3 FINISH (UNIT II)
FAIP NO. I-H3-1(75), UNIT II
LEEWARD SECTION

SCALE: AS SHOWN DATE: DECEMBER 1997

SHEET NO. 6V14A OF 14 SHEETS

C.O. 884S-1

ORIGINAL PLAN | SURVEY PLOTTED BY | DRAWN BY | TRACED BY | DESIGNED BY | QUANTITIES BY | CHECKED BY | DATE
NOTE BOOK No.

CAD by D. Burgess, 55-52

Last Saved: J:\H3RF\RFU2\CO\STRUCT\CO-LUM.dwg 12/03/97 at 15:37

FED. ROAD DIST. NO.	STATE	FED. AID PROJ. NO.	FISCAL YEAR	SHEET NO.	TOTAL SHEETS
HAWAII	HAW.	I-H3-1(75), UNIT II	1997	885	1102

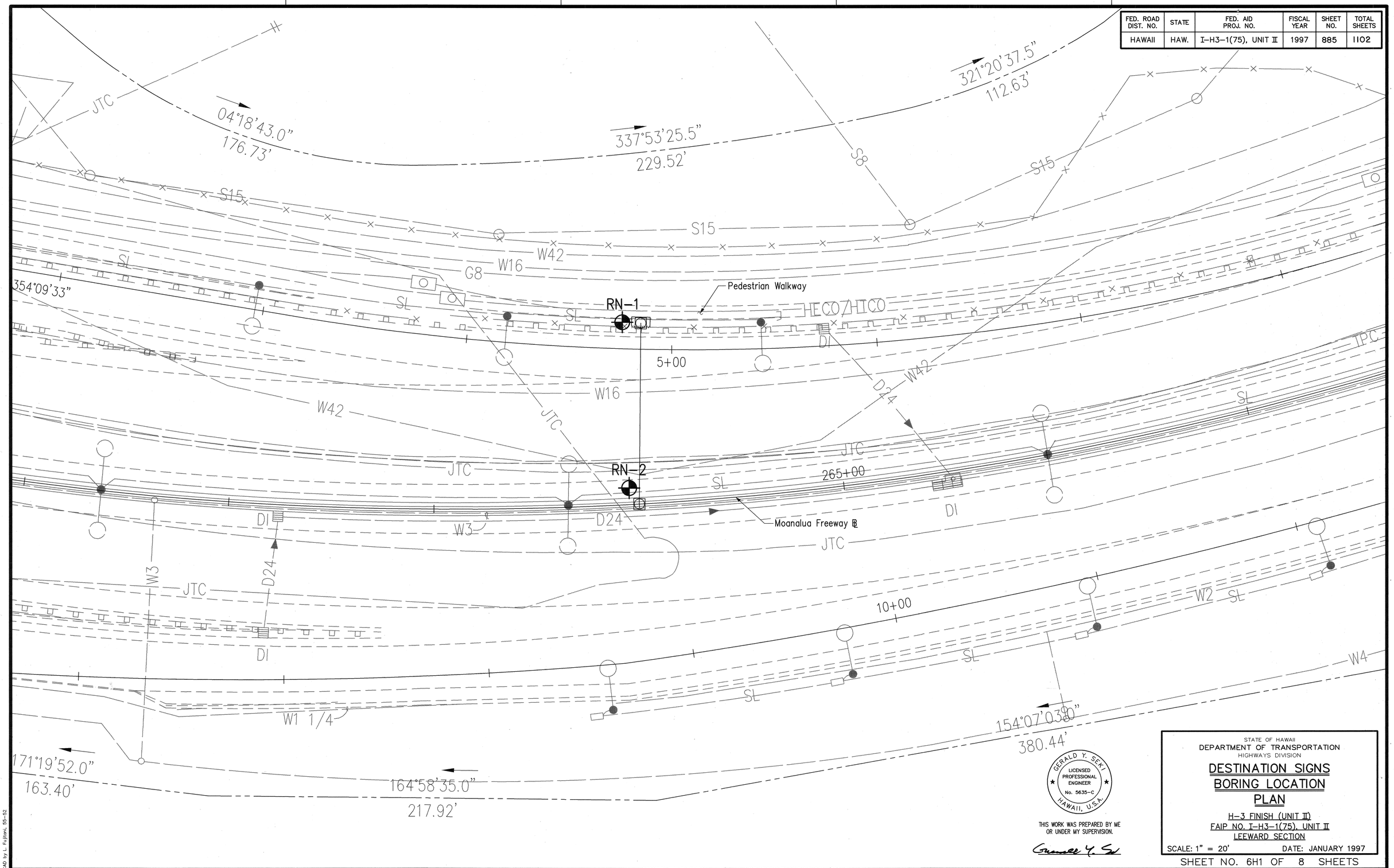

GERALD Y. SEKI
LICENSED PROFESSIONAL ENGINEER
No. 5635-C
HAWAII, U.S.A.

THIS WORK WAS PREPARED BY ME OR UNDER MY SUPERVISION.

STATE OF HAWAII
DEPARTMENT OF TRANSPORTATION
HIGHWAYS DIVISION

DESTINATION SIGNS BORING LOCATION PLAN

H-3 FINISH (UNIT II)
FAIP NO. I-H3-1(75), UNIT II
LEEWARD SECTION

SCALE: 1" = 20' DATE: JANUARY 1997

SHEET NO. 6H1 OF 8 SHEETS

ORIGINAL PLAN		
	SURVEY PLOTTED BY	DATE
	DRAWN BY	" " "
	TRACED BY	" " "
NOTE BOOK	DESIGNED BY	
	QUANTITIES BY	
No.	CHECKED BY	

CAD by L. Fujitani, 55-52

Last Saved: J:\H3RF\RFU2\SIGN\RN1.dwg 01/28/97 at 14:12

FED. ROAD DIST. NO.	STATE	FED. AID PROJ. NO.	FISCAL YEAR	SHEET NO.	TOTAL SHEETS
HAWAII	HAW.	I-H3-1(75), UNIT II	1997	886	1102

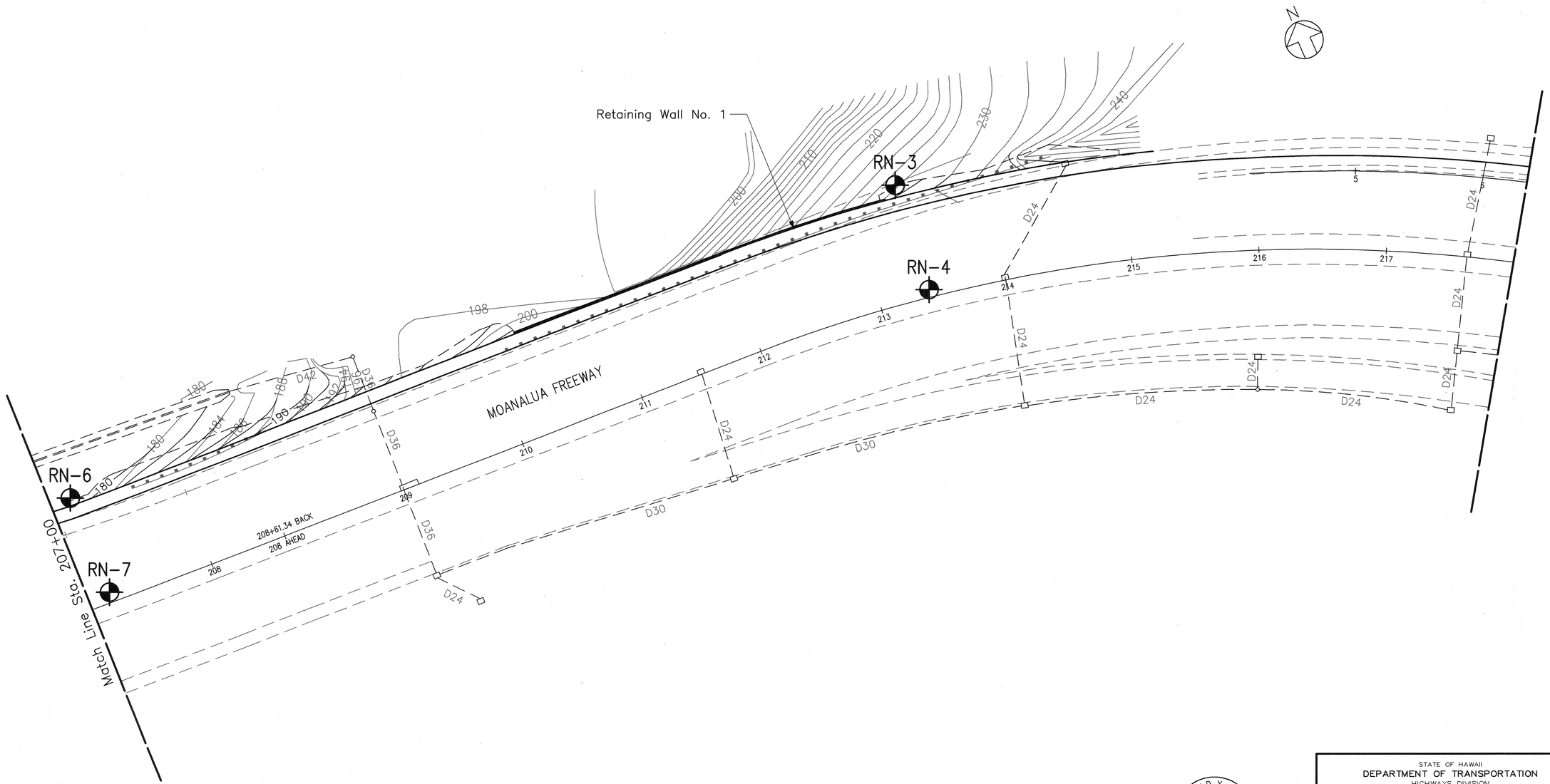

ORIGINAL PLAN		
	SURVEY PLOTTED BY	DATE
	DRAWN BY	" "
	TRACED BY	" "
NOTE BOOK	DESIGNED BY	" "
	QUANTITIES BY	
No.	CHECKED BY	

CAD by L. Fujitani, 55-52

Last Saved: J:\H3RF\RFU2\GEOTECH\DRN04.dwg 01/28/97 at 13:52

GERALD Y. SEKI
LICENSED PROFESSIONAL ENGINEER
No. 5635-C
HAWAII, U.S.A.

THIS WORK WAS PREPARED BY ME OR UNDER MY SUPERVISION.

STATE OF HAWAII
DEPARTMENT OF TRANSPORTATION
HIGHWAYS DIVISION

DESTINATION SIGNS BORING LOCATION PLAN

H-3 FINISH (UNIT II)
FAIP NO. I-H3-1(75), UNIT II
LEEWARD SECTION

SCALE: 1" = 40' DATE: JANUARY 1997

SHEET NO. 6H2 OF 8 SHEETS

FED. ROAD DIST. NO.	STATE	FED. AID PROJ. NO.	FISCAL YEAR	SHEET NO.	TOTAL SHEETS
HAWAII	HAW.	I-H3-1(75), UNIT II	1997	887	1102

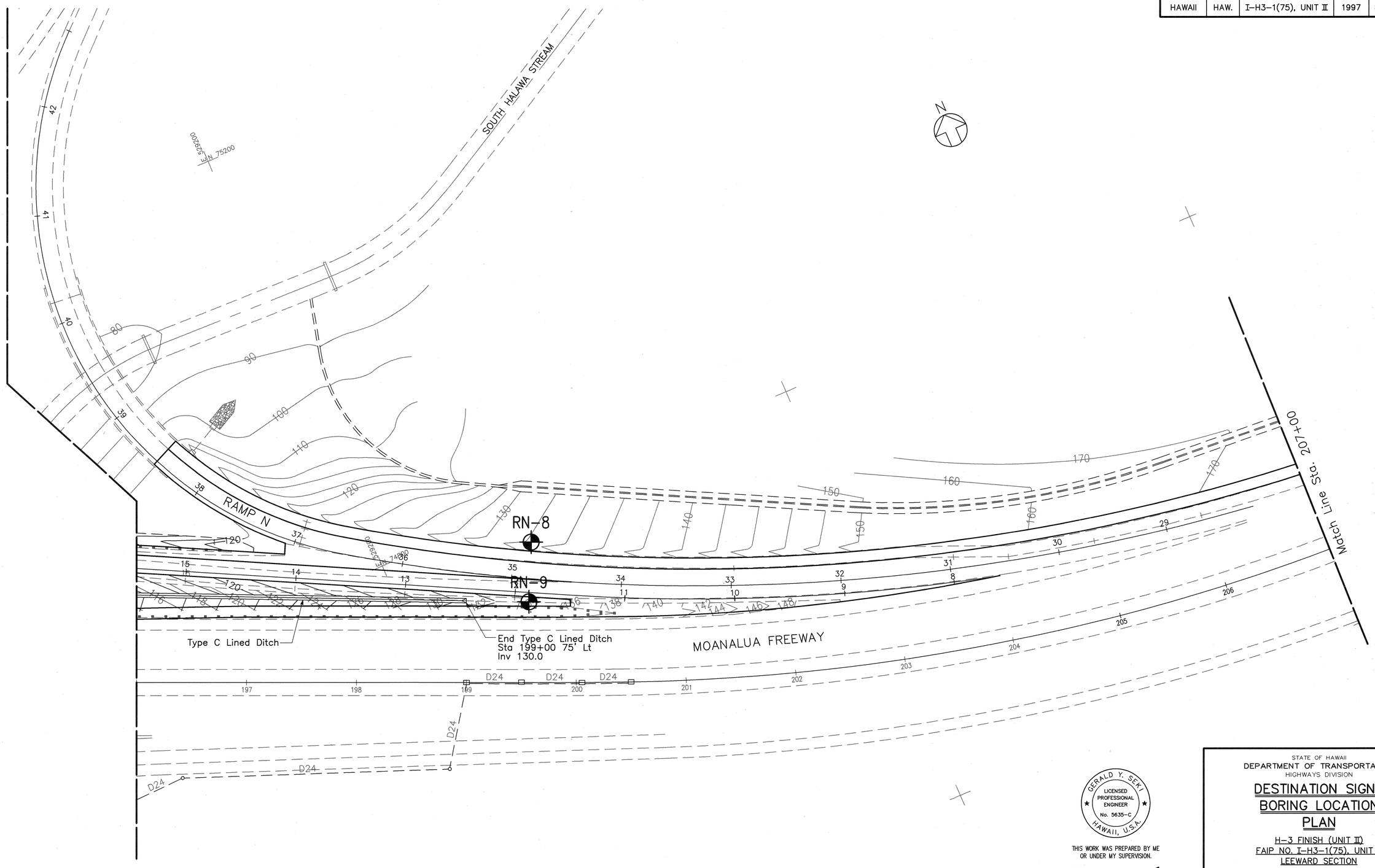

ORIGINAL PLAN		
	SURVEY PLOTTED BY	DATE
	DRAWN BY	"
	TRACED BY	"
NOTE BOOK	DESIGNED BY	"
	QUANTITIES BY	"
No.	CHECKED BY	"

CAD by L. Fujitani, 55-52

Last Saved: J:\HJRF\RFU2\GEOTECH\DRN03.dwg 01/28/97 at 13:51

GERALD Y. SEKI
LICENSED PROFESSIONAL ENGINEER
No. 5635-C
HAWAII, U.S.A.

THIS WORK WAS PREPARED BY ME OR UNDER MY SUPERVISION.

STATE OF HAWAII
DEPARTMENT OF TRANSPORTATION
HIGHWAYS DIVISION

DESTINATION SIGNS BORING LOCATION PLAN

H-3 FINISH (UNIT II)
FAIP NO. I-H3-1(75), UNIT II
LEEWARD SECTION

SCALE: 1" = 40' DATE: JANUARY 1997

SHEET NO. 6H3 OF 8 SHEETS

FED. ROAD DIST. NO.	STATE	FED. AID PROJ. NO.	FISCAL YEAR	SHEET NO.	TOTAL SHEETS
HAWAII	HAW.	I-H3-1(75), UNIT II	1997	888	1102

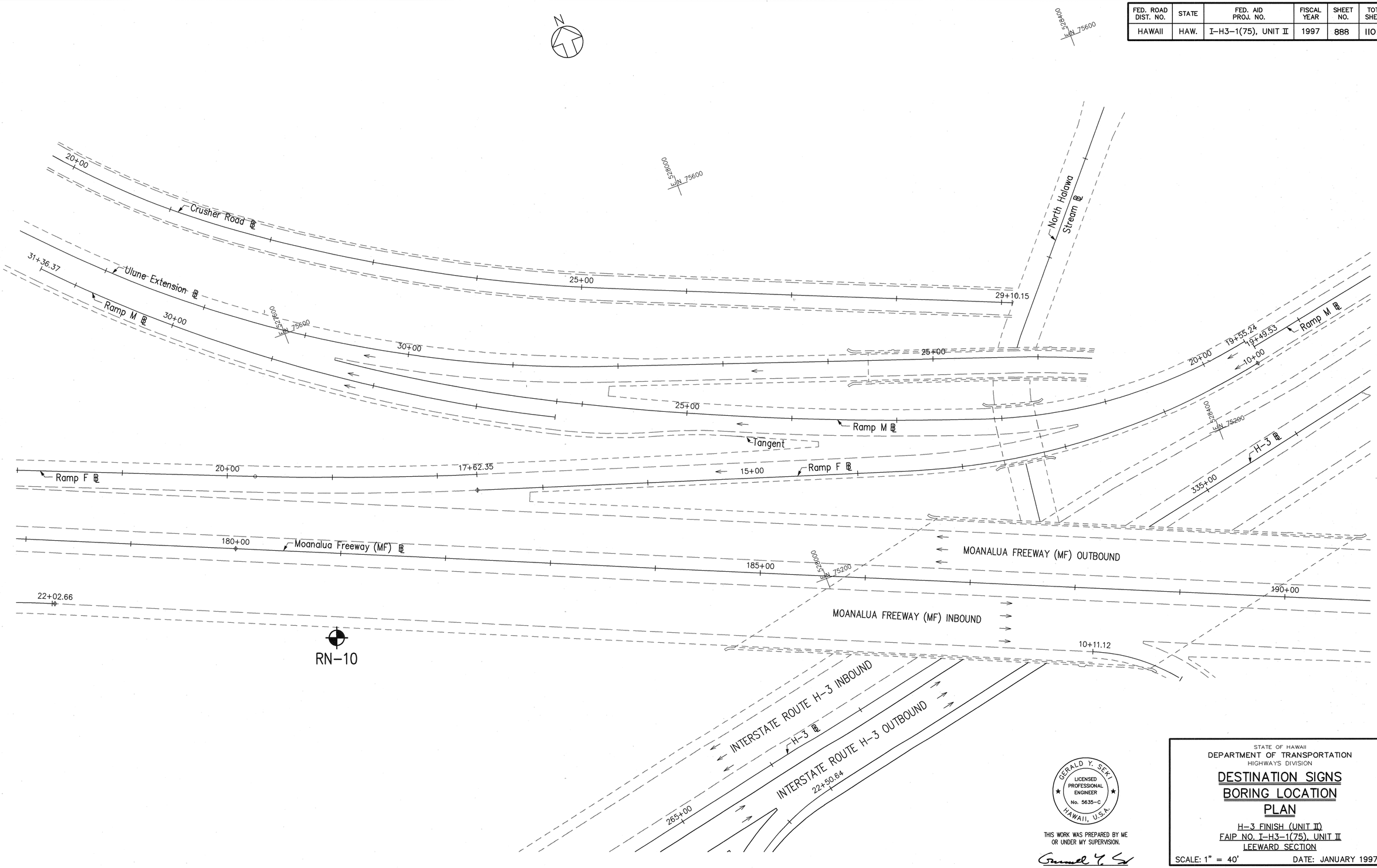

GERALD Y. SEKI
LICENSED PROFESSIONAL ENGINEER
No. 5635-C
HAWAII, U.S.A.

THIS WORK WAS PREPARED BY ME OR UNDER MY SUPERVISION.

STATE OF HAWAII
DEPARTMENT OF TRANSPORTATION
HIGHWAYS DIVISION

DESTINATION SIGNS BORING LOCATION PLAN

H-3 FINISH (UNIT II)
FAIP NO. I-H3-1(75), UNIT II
LEEWARD SECTION

SCALE: 1" = 40' DATE: JANUARY 1997

SHEET NO. 6H4 OF 8 SHEETS

888

ORIGINAL PLAN		SURVEY PLOTTED BY	DATE
		DRAWN BY	" " " "
		TRACED BY	
		DESIGNED BY	
		QUANTITIES BY	
NOTE BOOK		CHECKED BY	
	No.		

CAD by L. Fujitani, 55-52

Last Saved: J:\H3RF\RFU2\GEOTECH\RN10.dwg 01/28/97 at 13:54

FED. ROAD DIST. NO.	STATE	FED. AID PROJ. NO.	FISCAL YEAR	SHEET NO.	TOTAL SHEETS
HAWAII	HAW.	I-H3-1(75), UNIT II	1997	889	1102

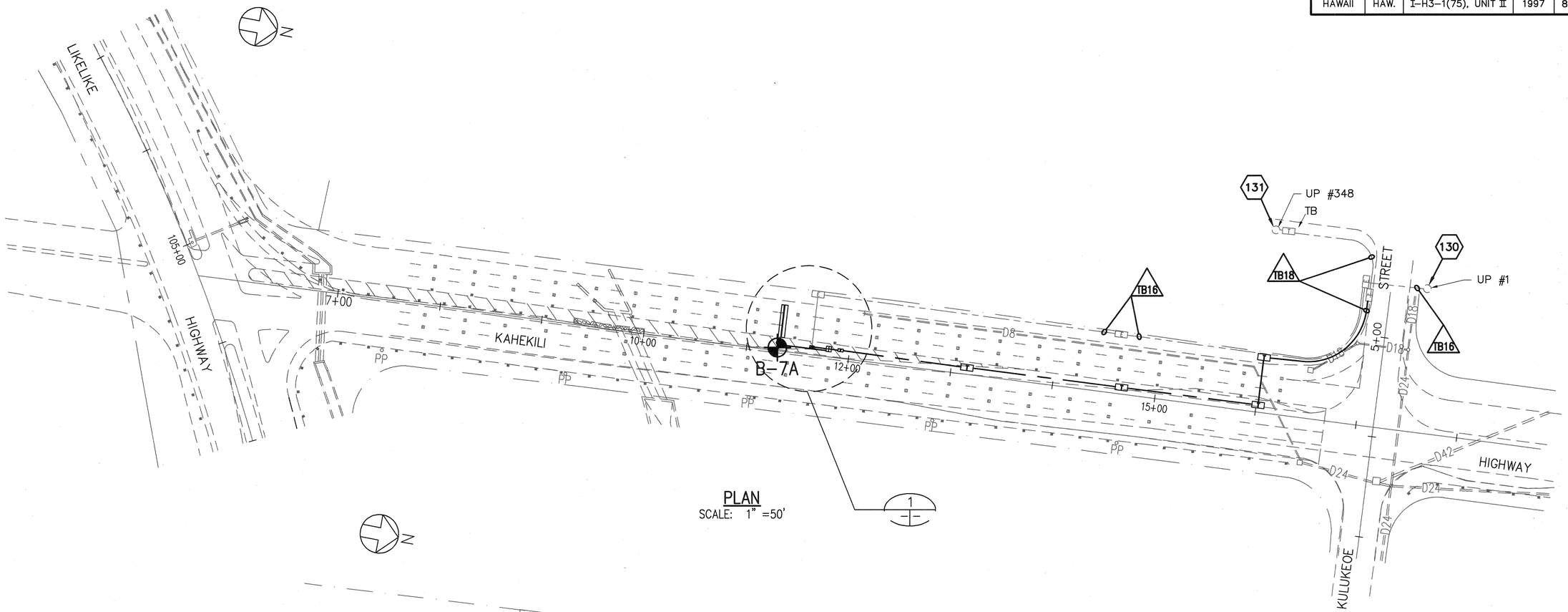

PLAN
SCALE: 1" =50'

1

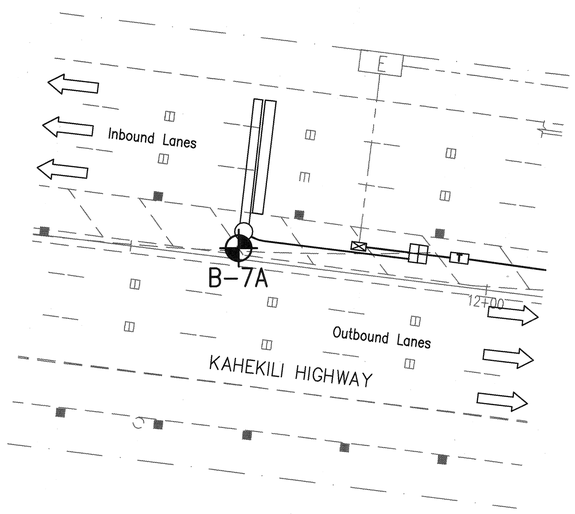

DETAIL VMS 37
SCALE: 1" = 40'

1

ORIGINAL PLAN		SURVEY PLOTTED BY	DATE
		DRAWN BY	"
		TRACED BY	"
NOTE BOOK		DESIGNED BY	"
		QUANTITIES BY	
		CHECKED BY	
	No.		

CAD by L. Fujitani, 55-52

Last Saved: J:\HJRF\RFU2\SIGN\BORLOC.dwg 01/28/97 at 14:09

GERALD Y. SEKI
LICENSED PROFESSIONAL ENGINEER
No. 5635-C
HAWAII, U.S.A.

THIS WORK WAS PREPARED BY ME OR UNDER MY SUPERVISION.

STATE OF HAWAII
DEPARTMENT OF TRANSPORTATION
HIGHWAYS DIVISION

DESTINATION SIGNS BORING LOCATION PLAN

H-3 FINISH (UNIT II)
FAIP NO. I-H3-1(75), UNIT II
LEEWARD SECTION

SCALE: AS SHOWN DATE: JANUARY 1997

SHEET NO. 6H5 OF 8 SHEETS

FED. ROAD DIST. NO.	STATE	FED. AID PROJ. NO.	FISCAL YEAR	SHEET NO.	TOTAL SHEETS
HAWAII	HAW.	I-H3-1(75), UNIT II	1997	890	1102

LEGEND

UNIFIED SOIL CLASSIFICATION SYSTEM (USCS)

MAJOR DIVISIONS			TYPICAL NAMES	
COARSE-GRAINED SOILS MORE THAN 50% OF MATERIAL RETAINED ON NO. 200 SIEVE	GRAVELS MORE THAN 50% OF COARSE FRACTION RETAINED ON NO. 4 SIEVE	CLEAN GRAVELS LESS THAN 5% FINES	GW	WELL GRADED GRAVELS, GRAVEL-SAND MIXTURES, LITTLE OR NO FINES
			GP	POORLY GRADED GRAVELS, GRAVEL SAND MIXTURES, LITTLE OR NO FINES
		GRAVELS WITH FINES MORE THAN 12% FINES	GM	SILTY GRAVELS, POORLY GRADED GRAVEL-SAND-SILT MIXTURES
			GC	CLAYEY GRAVELS, POORLY GRADED GRAVEL-SAND-CLAY MIXTURES
	SANDS 50% OR MORE OF COARSE FRACTION PASSING THROUGH NO. 4 SIEVE	CLEAN SANDS LESS THAN 5% FINES	SW	WELL GRADED SANDS, GRAVELLY SANDS, LITTLE OR NO FINES
			SP	POORLY GRADED SANDS, GRAVELLY SANDS, LITTLE OR NO FINES
		SANDS WITH FINES MORE THAN 12% FINES	SM	SILTY SANDS, POORLY GRADED SAND-SILT MIXTURES
			SC	CLAYEY SANDS, POORLY GRADED SAND-CLAY MIXTURES
FINE-GRAINED SOILS 50% OR MORE OF MATERIAL PASSING THROUGH NO. 200 SIEVE	SILTS AND CLAYS LIQUID LIMIT LESS THAN 50		ML	INORGANIC SILTS AND VERY FINE SANDS, ROCK FLOUR, SILTY OR CLAYEY FINE SANDS, WITH SLIGHT PLASTICITY
			CL	INORGANIC CLAYS OF LOW TO MEDIUM PLASTICITY, GRAVELLY CLAYS, SANDY CLAYS, SILTY CLAYS, LEAN CLAYS
			OL	ORGANIC SILTS AND ORGANIC SILT-CLAYS OF LOW PLASTICITY
	SILTS AND CLAYS LIQUID LIMIT 50 OR MORE		MH	INORGANIC SILTS, MICACEOUS OR DIATOMACEOUS FINE SANDY OR SILTY SOILS, ELASTIC SILTS
			CH	INORGANIC CLAYS OF HIGH PLASTICITY, FAT CLAYS
			OH	ORGANIC CLAYS OF MEDIUM TO HIGH PLASTICITY
HIGHLY ORGANIC SOILS			Pt	PEAT AND OTHER HIGHLY ORGANIC SOILS

NOTE: DUAL SYMBOLS ARE USED TO INDICATE BORDERLINE SOIL CLASSIFICATIONS

LEGEND:

2-INCH O.D. SPLIT-SPOON SAMPLE — WATER LEVEL — 3-INCH O.D. THIN-WALL TUBE SAMPLE — 2.5-INCH O.D. S-H SAMPLE

2.5-INCH OR 1.9-INCH O.D. CORE-BARREL SAMPLE

Parsons Brinckerhoff

BORING LOG LEGEND

H-3 Finish Unit II

FAIP No. I-H3-1(75)

DATE: JAN. 1997

PROJECT NO. 3506V080

PLATE NO. A

DEFINITION OF TERMS

SOIL DESCRIPTION

Density of Consistency

Granular Soil		Cohesive Soil	
Relative Density	Blow Count, N	Consistency	Blow Count, N
Very Loose	0-4	Very soft	0-2
Loose	4-10	Soft	2-4
Medium Density	10-30	Medium	4-8
Dense	30-50	Stiff	8-15
Very Dense	50 or more	Very Stiff	15-30
		Hard	30 or more

ROCK DESCRIPTION

WEATHERING

Unweathered	No visible sign of rock material weathering, perhaps slight discoloration on major discontinuity surfaces
Slightly weathered	Discoloration indicates weathering of rock material and discontinuity surfaces. All the rock material may be discolored by weathering and may be somewhat weaker externally than in its fresh condition.
Moderately weathered	Less than half of the rock material is decomposed and/or disintegrated to a soil. Fresh or discolored rock is present either as a continuous framework or as corestones.
Highly weathered	More than half of the rock material is decomposed and/or disintegrated to a soil. Fresh or discolored rock is present either as a discontinuous framework or as corestones.

CONTINUITY

Term	Length of Drill Core Stem Pieces
Sound	>8"
Slightly Fractured	4"-8"
Moderately Fractured	1"-4"
Closely Fractured	<1"

HARDNESS

Weak	Can be peeled by a pocket knife, shallow indentations made or crumbles by firm blow with point of geological hammer
Medium Strong	Cannot be scraped or peeled with a pocket knife, specimen can be fractured with single firm blow or geological hammer
Strong	Specimen requires more than one blow of geological hammer to fracture it

GERALD Y. SEKI — LICENSED PROFESSIONAL ENGINEER No. 5635-C — HAWAII, U.S.A.

THIS WORK WAS PREPARED BY ME OR UNDER MY SUPERVISION.

STATE OF HAWAII
DEPARTMENT OF TRANSPORTATION
HIGHWAYS DIVISION

DESTINATION SIGNS
BORING LOG LEGEND

H-3 FINISH (UNIT II)
FAIP NO. I-H3-1(75), UNIT II
LEEWARD SECTION

SCALE: NONE DATE: JANUARY 1997

SHEET NO. 6H6 OF 8 SHEETS

ORIGINAL PLAN — SURVEY PLOTTED BY ____ DATE ____ TRACED BY ____ DESIGNED BY ____ QUANTITIES BY ____ CHECKED BY ____ NOTE BOOK ____ No. ____

CAD by L. Fujioni, 55-52

Last Saved: J:\H3RF\RFU2\SIGN\DSBNOTES.dwg 01/28/97 at 14:11

FED. ROAD DIST. NO.	STATE	FED. AID PROJ. NO.	FISCAL YEAR	SHEET NO.	TOTAL SHEETS
HAWAII	HAW.	I-H3-1(75), UNIT II	1997	891	1102

PB 100 YEARS — Parsons Brinckerhoff

H-3 Finish Unit II
FAIP No. I-H3-1(75)
Oahu, Hawaii

BORING NO. RN- 1

OTHER LAB TESTS	DRY UNIT WEIGHT (pcf)	MOISTURE CONTENT (%)	CORE RECOVERY (%)	R.Q.D (%)	NUMBER OF BLOWS/FT	SAMPLE TYPE AND NUMBER	DEPTH IN FEET	GRAPHIC SYMBOL	U.S.C.S	GEOTECHNICAL DESCRIPTION
		7			40	SP-1			GC	Mottled brown clayey GRAVEL with sand, dense, dry (Fill)
		34			38	SP-2			SC	Mottled brown and gray clayey SAND with gravel, dense, moist (Fill)
TX	75	28			600ps /1'	ST-3	5			
	80	34			600ps /.8'	ST-4			MH	Reddish brown silty CLAY with some gravel and cobbles, hard, moist (Fill)
		29	100	0	73/.7'	SP-5 CB-6	10			
		31			66	SP-7				
					600ps /0'	ST-8				
		20			100/.4'	SH-9				
			27	0		CB-10	15			
		22			46	SP-11	20		MH	Reddish brown clayey SILT with sand and gravel, hard, moist (Residual)
		37			31	SP-12	25			
		27			50/.5'	SP-13	30		MH	Dark brown silty CLAY with fine sand, hard, moist (Residual)
							35			End boring at 31.0 ft. on 9/8/95
										Groundwater not encountered.
							40			

SAMPLE TYPE
CB - Core Barrel
DN - Denison Barrel
SB - Split Barrel (2.5")
SP - Standard Penetration
ST - Thin-Wall Tube
SH - S & H Barrel (2.5")

OTHER LAB TESTS
CN - Consolidation
DS - Direct Shear
PI - Atterberg Limits
SA - Sieve Analysis
TX - Triaxial Compression
UC - Unconfined Compression

BORING LOCATION: Sta.264+48, o/s 89'L
GROUND SURFACE ELEVATION: + 85 ft.
DATE(S) DRILLED: 9/7/95 to 9/8/95
DRILLER: HGG
LOGGED BY: BC,FB
TYPE RIG: CME 55
PROJECT NO. 3506V080
PLATE NO. A- 1

PB 100 YEARS — Parsons Brinckerhoff

H-3 Finish Unit II
FAIP No. I-H3-1(75)
Oahu, Hawaii

BORING NO. RN- 2

OTHER LAB TESTS	DRY UNIT WEIGHT (pcf)	MOISTURE CONTENT (%)	CORE RECOVERY (%)	R.Q.D (%)	NUMBER OF BLOWS/FT	SAMPLE TYPE AND NUMBER	DEPTH IN FEET	GRAPHIC SYMBOL	U.S.C.S	GEOTECHNICAL DESCRIPTION
		11			70	SP-1			GM	2.5" AC
		11			50/.5'	SP-2			SC	Gray brown silty GRAVEL with sand, very dense, damp (Base Course)
		21			48	SP-3	5			Grayish brown clayey SAND with gravel, dense, dry (Fill)
					500ps /0'	ST-4				
		12			37	SP-5				
		10			69	SP-6	10			Grades to very dense
									SC	Grayish brown clayey SAND with gravel, loose, wet (Fill)
		22			8	SP-7	15			
		10			7	SP-8	20		MH	Dark brown silty CLAY with cobble and traces of mudrock fragments, medium, moist
		30	70	0		CB-9				
TX	89	33			14	SH-10				
		25			18	SP-11	25			Grades to very stiff
									SC	Dark brown clayey SAND with mudrock fragments, very dense, moist
	89	25			104	SH-12	30			
										End boring at 31.5 ft. on 9/11/95
							35			Groundwater not encountered.
							40			

SAMPLE TYPE
CB - Core Barrel
DN - Denison Barrel
SB - Split Barrel (2.5")
SP - Standard Penetration
ST - Thin-Wall Tube
SH - S & H Barrel (2.5")

OTHER LAB TESTS
CN - Consolidation
DS - Direct Shear
PI - Atterberg Limits
SA - Sieve Analysis
TX - Triaxial Compression
UC - Unconfined Compression

BORING LOCATION: Sta.264+48, o/s 8'L
GROUND SURFACE ELEVATION: + 91 ft.
DATE(S) DRILLED: 9/11/95 to 9/11/95
DRILLER: HGG
LOGGED BY: BC,EH,FB
TYPE RIG: CME 55
PROJECT NO. 3506V080
PLATE NO. A- 2

PB 100 YEARS — Parsons Brinckerhoff

H-3 Finish Unit II
FAIP No. I-H3-1(75)
Oahu, Hawaii

BORING NO. RN- 3

OTHER LAB TESTS	DRY UNIT WEIGHT (pcf)	MOISTURE CONTENT (%)	CORE RECOVERY (%)	R.Q.D (%)	NUMBER OF BLOWS/FT	SAMPLE TYPE AND NUMBER	DEPTH IN FEET	GRAPHIC SYMBOL	U.S.C.S	GEOTECHNICAL DESCRIPTION
		13			46	SP-1			SC	Grayish brown clayey SAND with gravel, dense, damp (Fill)
		15			34	SP-2			MH	Reddish brown clayey SILT with sand and gravel, very stiff to hard, damp (Fill)
		17			27	SP-3	5			
		13			54	SP-4				
		10			41	SH-5	10			
UC	93	27			130	SH-6			CH	Reddish brown silty CLAY, hard, moist (Residual)
							15			
		21			60/.4'	SP-7 CB-8 CB-9	20			Gray BASALT, slightly weathered, moderately fractured, strong
			75 100	0 40						
			100	43		CB-10	25			
							30			End boring at 30.0 ft. on 9/19/95
							35			Groundwater not encountered.
							40			

SAMPLE TYPE
CB - Core Barrel
DN - Denison Barrel
SB - Split Barrel (2.5")
SP - Standard Penetration
ST - Thin-Wall Tube
SH - S & H Barrel (2.5")

OTHER LAB TESTS
CN - Consolidation
DS - Direct Shear
PI - Atterberg Limits
SA - Sieve Analysis
TX - Triaxial Compression
UC - Unconfined Compression

BORING LOCATION: Sta.213+40, o/s 85'L
GROUND SURFACE ELEVATION: +230 ft.
DATE(S) DRILLED: 9/18/95 to 9/19/95
DRILLER: HGG
LOGGED BY: BC,EH,FB
TYPE RIG: Deitrich D-25
PROJECT NO. 3506V080
PLATE NO. A- 3

PB 100 YEARS — Parsons Brinckerhoff

H-3 Finish Unit II
FAIP No. I-H3-1(75)
Oahu, Hawaii

BORING NO. RN- 4

OTHER LAB TESTS	DRY UNIT WEIGHT (pcf)	MOISTURE CONTENT (%)	CORE RECOVERY (%)	R.Q.D (%)	NUMBER OF BLOWS/FT	SAMPLE TYPE AND NUMBER	DEPTH IN FEET	GRAPHIC SYMBOL	U.S.C.S	GEOTECHNICAL DESCRIPTION
		12			41	SP-1			GM	2.5" AC
		32			39	SP-2			MH	Gray and brown silty GRAVEL with sand, dense, damp (Base Course)
	81	32			500ps /.4'	ST-3	5			Mottled gray brown clayey SILT, hard, moist (Residual)
TX PI	82	33			110	SH-4				Grades to mottled brown
		40			37	SP-5	10			
		32			80/.4'	SP-6	15		MH	Gray clayey SILT, hard, moist (Saprolite)
			90	18		CB-7				Gray BASALT, slightly weathered, closely to moderately fractured, strong
			100	48		CB-8	20			
			100	48		CB-9	25			
							30			Reddish brown CLINKER
										End boring at 30.2 ft. on 9/12/95
							35			
							40			

SAMPLE TYPE
CB - Core Barrel
DN - Denison Barrel
SB - Split Barrel (2.5")
SP - Standard Penetration
ST - Thin-Wall Tube
SH - S & H Barrel (2.5")

OTHER LAB TESTS
CN - Consolidation
DS - Direct Shear
PI - Atterberg Limits
SA - Sieve Analysis
TX - Triaxial Compression
UC - Unconfined Compression

BORING LOCATION: Sta.213+40, o/s 6'L
GROUND SURFACE ELEVATION: +227 ft.
DATE(S) DRILLED: 9/12/95 to 9/12/95
DRILLER: HGG
LOGGED BY: BC,EH,FB
TYPE RIG: CME 55
PROJECT NO. 3506V080
PLATE NO. A- 4

PB 100 YEARS — Parsons Brinckerhoff

H-3 Finish Unit II
FAIP No. I-H3-1(75)
Oahu, Hawaii

BORING NO. RN- 6

OTHER LAB TESTS	DRY UNIT WEIGHT (pcf)	MOISTURE CONTENT (%)	CORE RECOVERY (%)	R.Q.D (%)	NUMBER OF BLOWS/FT	SAMPLE TYPE AND NUMBER	DEPTH IN FEET	GRAPHIC SYMBOL	U.S.C.S	GEOTECHNICAL DESCRIPTION
		20			38	SP-1			MH	Brown clayey SILT with traces of sand and gravel, hard, damp (Fill)
		10			50/.5'	SP-2				
	83	26			550ps /.3'	ST-3	5			
		38			38	SP-4			MH	Mottled brown clayey SILT with sand, hard, moist (Residual)
	87	35			550ps /.9'	ST-5	10			
		34			43	SP-6	15		MH	Mottled gray clayey SILT, hard, moist (Residual)
	80	32			600ps /.5'	ST-7	20		MH	Gray clayey SILT, stiff, moist (Saprolite)
					50/0'	SP-8 CB-9	25			Gray BASALT, slightly weathered, moderately fractured, strong
			100	40						
							30			End boring at 30.0 ft. on 9/5/95
							35			Groundwater not encountered.
							40			

SAMPLE TYPE
CB - Core Barrel
DN - Denison Barrel
SB - Split Barrel (2.5")
SP - Standard Penetration
ST - Thin-Wall Tube
SH - S & H Barrel (2.5")

OTHER LAB TESTS
CN - Consolidation
DS - Direct Shear
PI - Atterberg Limits
SA - Sieve Analysis
TX - Triaxial Compression
UC - Unconfined Compression

BORING LOCATION: Sta.206+55, o/s 88'L
GROUND SURFACE ELEVATION: +180 ft.
DATE(S) DRILLED: 9/5/95 to 9/5/95
DRILLER: HGG
LOGGED BY: BC,EH,FB
TYPE RIG: CME 55
PROJECT NO. 3506V080
PLATE NO. A- 6

PB 100 YEARS — Parsons Brinckerhoff

H-3 Finish Unit II
FAIP No. I-H3-1(75)
Oahu, Hawaii

BORING NO. RN- 7

OTHER LAB TESTS	DRY UNIT WEIGHT (pcf)	MOISTURE CONTENT (%)	CORE RECOVERY (%)	R.Q.D (%)	NUMBER OF BLOWS/FT	SAMPLE TYPE AND NUMBER	DEPTH IN FEET	GRAPHIC SYMBOL	U.S.C.S	GEOTECHNICAL DESCRIPTION
		11			32	SP-1			GM	2" AC
		27			25	SP-2			MH	Gray silty GRAVEL with sand, dense, damp (Base Course)
		37								Reddish brown clayey SILT, very stiff, moist (Fill)
TX	88	33			550ps /1.3'	ST-3	5			
	108	15			16	SH-4			MH	Reddish brown clayey SILT with sand and gravel, stiff, moist (Fill)
TX	80	43			650ps /1.5'	ST-5	10		MH	Brown and gray clayey SILT, very stiff, moist (Residual)
		49			19	SP-6	15			
	84	36			145	SH-7	20		ML	Brown gray clayey SILT and GRAVEL, hard, moist (Saprolite)
		35			53	SP-8	25			
		28			50/.4'	SP-9	30			Gray BASALT fragments, dense
										End boring at 30.4 ft. on 9/13/95
							35			Groundwater not encountered.
							40			

SAMPLE TYPE
CB - Core Barrel
DN - Denison Barrel
SB - Split Barrel (2.5")
SP - Standard Penetration
ST - Thin-Wall Tube
SH - S & H Barrel (2.5")

OTHER LAB TESTS
CN - Consolidation
DS - Direct Shear
PI - Atterberg Limits
SA - Sieve Analysis
TX - Triaxial Compression
UC - Unconfined Compression

BORING LOCATION: Sta.206+55, o/s 6'L
GROUND SURFACE ELEVATION: +180 ft.
DATE(S) DRILLED: 9/13/95 to 9/13/95
DRILLER: HGG
LOGGED BY: BC,EH,FB
TYPE RIG: CME 55
PROJECT NO. 3506V080
PLATE NO. A- 7

PB 100 YEARS — Parsons Brinckerhoff

H-3 Finish Unit II
FAIP No. I-H3-1(75)
Oahu, Hawaii

BORING NO. RN- 8

OTHER LAB TESTS	DRY UNIT WEIGHT (pcf)	MOISTURE CONTENT (%)	CORE RECOVERY (%)	R.Q.D (%)	NUMBER OF BLOWS/FT	SAMPLE TYPE AND NUMBER	DEPTH IN FEET	GRAPHIC SYMBOL	U.S.C.S	GEOTECHNICAL DESCRIPTION
		7			14	SP-1			MH	Brown clayey SILT with sand and gravel, stiff to very stiff, damp (Fill)
		16			26	SP-2				
	90	25			600ps /.5'	ST-3	5		MH	Brown clayey SILT with gravel, stiff, moist (Residual)
		-			50/0'	SP-4				
		29			60	SP-5	10		MH	Mottled brown clayey SILT, hard, moist (Residual)
		32			600ps /.4'	ST-6	15		MH	Brown clayey SILT, stiff, moist (Residual)
		28			50/.3'	SP-7	20			Grades to hard
		31			68	SP-8	25			
		24			34	SP-9	30		SM	Gray brown silty SAND with gravel, dense, moist (Saprolite)
										End boring at 31.5 ft. on 9/6/95
							35			Groundwater not encountered.
							40			

SAMPLE TYPE
CB - Core Barrel
DN - Denison Barrel
SB - Split Barrel (2.5")
SP - Standard Penetration
ST - Thin-Wall Tube
SH - S & H Barrel (2.5")

OTHER LAB TESTS
CN - Consolidation
DS - Direct Shear
PI - Atterberg Limits
SA - Sieve Analysis
TX - Triaxial Compression
UC - Unconfined Compression

BORING LOCATION: Sta.34+85, o/s 32'R
GROUND SURFACE ELEVATION: +132 ft.
DATE(S) DRILLED: 9/6/95 to 9/6/95
DRILLER: HGG
LOGGED BY: BC,EH,FB
TYPE RIG: CME 55
PROJECT NO. 3506V080
PLATE NO. A- 8

ORIGINAL PLAN
SURVEY PLOTTED BY ____ DATE ____
DRAWN BY ____
TRACED BY ____
DESIGNED BY ____
QUANTITIES BY ____
CHECKED BY ____
NOTE BOOK ____
No. ____

GERALD Y. SEKI — LICENSED PROFESSIONAL ENGINEER No. 5835-C — HAWAII, U.S.A.

THIS WORK WAS PREPARED BY ME OR UNDER MY SUPERVISION.

STATE OF HAWAII
DEPARTMENT OF TRANSPORTATION
HIGHWAYS DIVISION

DESTINATION SIGNS BORING LOGS

H-3 FINISH (UNIT II)
FAIP NO. I-H3-1(75), UNIT II
LEEWARD SECTION

SCALE: NONE — DATE: JANUARY 1997

SHEET NO. 6H7 OF 8 SHEETS

891

FED. ROAD DIST. NO.	STATE	FED. AID PROJ. NO.	FISCAL YEAR	SHEET NO.	TOTAL SHEETS
HAWAII	HAW.	I-H3-1(75), UNIT II	1997	892	1102

PB 100 YEARS — Parsons Brinckerhoff

H-3 Finish Unit II
FAIP No. I-H3-1(75)
Oahu, Hawaii

BORING NO. **RN- 9**

OTHER LAB TESTS	DRY UNIT WEIGHT (pcf)	MOISTURE CONTENT (%)	CORE RECOVERY (%)	R.Q.D (%)	NUMBER OF BLOWS/FT	SAMPLE TYPE AND NUMBER	DEPTH IN FEET	U.S.C.S	GEOTECHNICAL DESCRIPTION
		16			17	SP-1		GM	2.5" AC
	84	35 34			600psi /1.3'	ST-2		MH	Gray silty GRAVEL with sand, medium density, damp (Base Course)
		47			51	SP-3	5	ML	Reddish brown clayey SILT with sand and traces of gravel, stiff to hard, moist (Fill)
			27	0		CB-4			Gray brown clayey SILT with sand, hard, moist (Residual)
		27			50/.5'	SP-5	10		
			50	0		CB-6			Brown volcanic TUFF, medium strong (Mudrock)
			25	0		CB-7			
							15		
		30			35	SP-8		MH	Reddish brown clayey SILT, hard, moist (Residual)
		25			600psi /0'	ST-9	20		
UC	97	28			120	SH-10			
	82	34			650psi /.7'	ST-11	25		
		36			75/.7'	SP-12			
								MH	Mottled reddish brown clayey SILT with fine sand, hard, moist (Residual)
		29			700psi /.1'	ST-13	30		
		34			73	SP-14			End boring at 31.6 ft. on 9/8/95
									Groundwater not encountered.
							35		
							40		

SAMPLE TYPE
CB - Core Barrel; DN - Denison Barrel; SB - Split Barrel (2.5"); SP - Standard Penetration; ST - Thin-Wall Tube; SH - S & H Barrel (2.5")

OTHER LAB TESTS
CN - Consolidation; DS - Direct Shear; PI - Atterberg Limits; SA - Sieve Analysis; TX - Triaxial Compression; UC - Unconfined Compression

BORING LOCATION: Sta.34+85, o/s 20'L
GROUND SURFACE ELEVATION: +132 ft.
DATE(S) DRILLED: 9/8/95 to 9/8/95
DRILLER: HGG
LOGGED BY: BC,EH,FB
TYPE RIG: CME 55
PROJECT NO. 3506V080
PLATE NO. A- 9

PB 100 YEARS — Parsons Brinckerhoff

H-3 Finish Unit II
FAIP No. I-H3-1(75)
Oahu, Hawaii

BORING NO. **B- 7A**

OTHER LAB TESTS	DRY UNIT WEIGHT (pcf)	MOISTURE CONTENT (%)	CORE RECOVERY (%)	R.Q.D (%)	NUMBER OF BLOWS/FT	SAMPLE TYPE AND NUMBER	DEPTH IN FEET	U.S.C.S	GEOTECHNICAL DESCRIPTION
		49			13	SP-1		CH	Mottled reddish brown CLAY with traces of roots and decomposed rock, stiff to medium, moist
		50			7	SP-2			
PI	72	50				ST-3	5		
PI		51						CH	Mottled brown CLAY, stiff to very stiff, moist
		63			13	SP-4	10		
PI CN	62	64				ST-5	15		
PI		38			30	SP-6	20		
		49				ST-7	25		
		63			12	SP-8	30	CH	Mottled brown CLAY with traces of decomposed rock, stiff, moist
	67	52				ST-9	35	CH	Grayish brown CLAY, stiff to hard, moist
			78	10		CB-10	40		Gray BASALT, slightly weathered, closely fractured, strong

SAMPLE TYPE
CB - Core Barrel; DN - Denison Barrel; SB - Split Barrel (2.5"); SP - Standard Penetration; ST - Thin-Wall Tube; SH - S & H Barrel (2.5")

OTHER LAB TESTS
CN - Consolidation; DS - Direct Shear; PI - Atterberg Limits; SA - Sieve Analysis; TX - Triaxial Compression; UC - Unconfined Compression

BORING LOCATION: Sta. 11+30, o/s 5'L
GROUND SURFACE ELEVATION: + 126 ft.
DATE(S) DRILLED: 3/15/94 to 3/16/94
DRILLER: HGG
LOGGED BY: BC
TYPE RIG: Mobile B-50
PROJECT NO. 3506V080
PLATE NO. A- 11

PB 100 YEARS — Parsons Brinckerhoff

H-3 Finish Unit II
FAIP No. I-H3-1(75)
Oahu, Hawaii

BORING NO. **RN-10**

OTHER LAB TESTS	DRY UNIT WEIGHT (pcf)	MOISTURE CONTENT (%)	CORE RECOVERY (%)	R.Q.D (%)	NUMBER OF BLOWS/FT	SAMPLE TYPE AND NUMBER	DEPTH IN FEET	U.S.C.S	GEOTECHNICAL DESCRIPTION
		39 19			22	SP-1		CH	Brownish gray CLAY with sand, gravel, cobbles and boulders, very stiff, damp (Fill)
PI		27			26	SP-2			
TX	93	28			550psi /.5'	ST-3	5		
					50/0'	SP-4	10		
								MH	Gray and brown silty CLAY with sand and gravel, hard, moist (Alluvium)
		44			36	SP-5	15		
		45			600psi /.2'	ST-6	20		
TX PI	68	64			19	SH-7	25		Grades to medium
								MH	Mottled brown silty CLAY with sand and gravel, very stiff, moist (Alluvium)
		49			25	SP-8	30		
		57			25	SP-9	35		
									End boring at 36.5 ft. on 9/3/96.
									Groundwater not encountered.
							40		

SAMPLE TYPE
CB - Core Barrel; DN - Denison Barrel; SB - Split Barrel (2.5"); SP - Standard Penetration; ST - Thin-Wall Tube; SH - S & H Barrel (2.5")

OTHER LAB TESTS
CN - Consolidation; DS - Direct Shear; PI - Atterberg Limits; SA - Sieve Analysis; TX - Triaxial Compression; UC - Unconfined Compression

BORING LOCATION: Sta.181+00, o/s 80'R
GROUND SURFACE ELEVATION: + 88 ft.
DATE(S) DRILLED: 9/3/96 to 9/3/96
DRILLER: HGG
LOGGED BY: BC, PM
TYPE RIG: CME 55
PROJECT NO. 3506V080
PLATE NO. A- 10

PB 100 YEARS — Parsons Brinckerhoff

H-3 Finish Unit II
FAIP No. I-H3-1(75)
Oahu, Hawaii

BORING NO. **B- 7A**

OTHER LAB TESTS	DRY UNIT WEIGHT (pcf)	MOISTURE CONTENT (%)	CORE RECOVERY (%)	R.Q.D (%)	NUMBER OF BLOWS/FT	SAMPLE TYPE AND NUMBER	DEPTH IN FEET	U.S.C.S	GEOTECHNICAL DESCRIPTION
			90	17		CB-11	45		Gray BASALT, slightly weathered, moderately fractured, strong
			95	0		CB-12	50		End boring at 50 ft. on 3/16/94.
							55		Groundwater Level at: Depth (ft) / Time / Date: 18 / 1:30 pm / 3/15/94; 13.5 / 4:50 pm / 3/16/94
							60		Laboratory Vane Shear (psf): ST-3 2050, 1650, 1900; ST-5 1120, 1480, 1100
							65		
							70		
							75		
							80		

SAMPLE TYPE
CB - Core Barrel; DN - Denison Barrel; SB - Split Barrel (2.5"); SP - Standard Penetration; ST - Thin-Wall Tube; SH - S & H Barrel (2.5")

OTHER LAB TESTS
CN - Consolidation; DS - Direct Shear; PI - Atterberg Limits; SA - Sieve Analysis; TX - Triaxial Compression; UC - Unconfined Compression

BORING LOCATION: Sta. 11+30, o/s 5'L
GROUND SURFACE ELEVATION: + 126 ft.
DATE(S) DRILLED: 3/15/94 to 3/16/94
DRILLER: HGG
LOGGED BY: BC
TYPE RIG: Mobile B-50
PROJECT NO. 3506V080
PLATE NO. A- 12

ORIGINAL PLAN — NOTE BOOK — No. ____
SURVEY PLOTTED BY ____ DATE ____
DRAWN BY ____
TRACED BY ____
DESIGNED BY ____
QUANTITIES BY ____
CHECKED BY ____

GERALD Y. SEKI — LICENSED PROFESSIONAL ENGINEER — No. 5635-C — HAWAII, U.S.A.

THIS WORK WAS PREPARED BY ME OR UNDER MY SUPERVISION.

Gerald Y. Seki

STATE OF HAWAII
DEPARTMENT OF TRANSPORTATION
HIGHWAYS DIVISION

DESTINATION SIGNS
BORING LOGS

H-3 FINISH (UNIT II)
FAIP NO. I-H3-1(75), UNIT II
LEEWARD SECTION

SCALE: NONE — DATE: JANUARY 1997

SHEET NO. 6H8 OF 8 SHEETS

892