FED. ROAD DIST. NO.	STATE	FED. AID PROJ. NO.	FISCAL YEAR	SHEET NO.	TOTAL SHEETS
HAWAII	HAW.	TQ-F-078-1(18)	1978	43	266

TOTAL EARTHWORK QUANTITIES

	UNIT 3A
GRADED AREA	14.18 AC
EXCAVATION	73,330 C.Y.
EMBANKMENT	12,554 C.Y.

OWNER & DEVELOPER: STATE OF HAWAII
TAX MAP KEY: 1-1-35

GENERAL NOTES:

1. ALL GRADING AND WORK SHALL BE DONE IN ACCORDANCE WITH CHAPTER 23, GRADING, SOIL EROSION AND SEDIMENT CONTROL OF THE REVISED ORDINANCES OF HONOLULU, 1969, AS AMENDED (ORDINANCE NUMBERS 3968, 4294 & 4538) AND ALL GRADING WORK SHALL BE DONE IN ACCORDANCE WITH "SOIL ENGINEERING REPORT, MOANALUA ROAD, PUULOA ROAD TO MIDDLE STREET, PROJECT NO. U-078-1(14), DEPARTMENT OF TRANSPORTATION, HIGHWAYS DIVISION, MATERIALS TESTING & RESEARCH BRANCH" OCTOBER 1976.
2. ABANDONED DRAINAGE STRUCTURES: SALVAGE FRAME & COVER; DEMOLISH 3' BELOW FINISH GRADE; PLUG ALL PIPES WITH CLASS D CONCRETE; DEMOLISH BOTTOM; FILL AND COMPACT. ALL WORK TO BE CONSIDERED AS PART OF CONTRACT ITEM NO. 604.1430 "EXIST. DRAIN. STRUCT. TO BE COMPLETELY DEMOLISH."
3. ELEVATIONS ARE BASED ON MEAN SEA LEVEL (MSL=0). LOCATION AND BENCH MARK DATA IS SHOWN ON SHEET D-3
4. ESTIMATED GRADING STARTING DATE: FEB. 1979 COMPLETION DATE: SEPT 1980
5. REMOVE PLUG AND CONNECT TO EXISTING DRAINAGE STRUCTURE WORK SHALL BE INCIDENTAL TO VARIOUS CONTRACT ITEMS.
6. THE CONTRACTOR SHALL REMOVE ALL SILT AND DEBRIS RESULTING FROM HIS WORK AND DEPOSITED IN DRAINAGE FACILITIES, ROADWAYS AND OTHER AREAS. THE COSTS INCURRED FOR ANY NECESSARY REMEDIAL ACTION BY THE CHIEF ENGINEER SHALL BE PAYABLE BY THE CONTRACTOR.
7. THE CONTRACTOR, AT HIS OWN EXPENSE, SHALL KEEP THE PROJECT AREA AND SURROUNDING AREA FREE FROM DUST NUISANCE. THE WORK SHALL BE IN CONFORMANCE WITH THE AIR POLLUTION CONTROL STANDARDS AND REGULATIONS OF THE STATE DEPARTMENT OF HEALTH.
8. ALL SLOPES AND EXPOSED AREAS SHALL BE SODDED OR PLANTED IMMEDIATELY AFTER THE GRADING WORK HAS BEEN COMPLETED.
9. NO GRADING WORK SHALL BE DONE ON SATURDAYS, SUNDAYS AND HOLIDAYS AT ANYTIME WITHOUT PRIOR NOTICE TO THE CHIEF ENGINEER.
10. LIMITS OF GRADED AREA SHALL BE FLAGGED BEFORE THE COMMENCEMENT OF THE GRADING WORK.
11. ALL GRADING OPERATIONS SHALL BE PERFORMED IN CONFORMANCE WITH THE APPLICABLE PROVISIONS OF THE WATER POLLUTION CONTROL AND WATER QUALITY STANDARDS CONTAINED IN THE PUBLIC HEALTH REGULATIONS, STATE DEPARTMENT OF HEALTH, ON WATER POLLUTION CONTROL AND WATER QUALITY STANDARDS.
12. TEMPORARY EROSION CONTROL PROCEDURES SHALL BE SUBMITTED FOR APPROVAL PRIOR TO APPLICATION FOR A GRADING PERMIT.
13. THE CITY SHALL BE INFORMED OF THE LOCATION OF THE BORROW/DISPOSAL SITE FOR THE PROJECT WHEN THE APPLICATION FOR A GRADING PERMIT IS MADE. THE BORROW/DISPOSAL SITE MUST ALSO FULFILL THE REQUIREMENTS OF THE GRADING ORDINANCE.

LEGEND

- 10 — EXISTING CONTOUR LINE
- 10 — FINISH CONTOUR LINE
- WATER FLOW DIRECTION
- EXISTING DRAIN TO BE REMOVED OR ABANDONED WITH PLUG

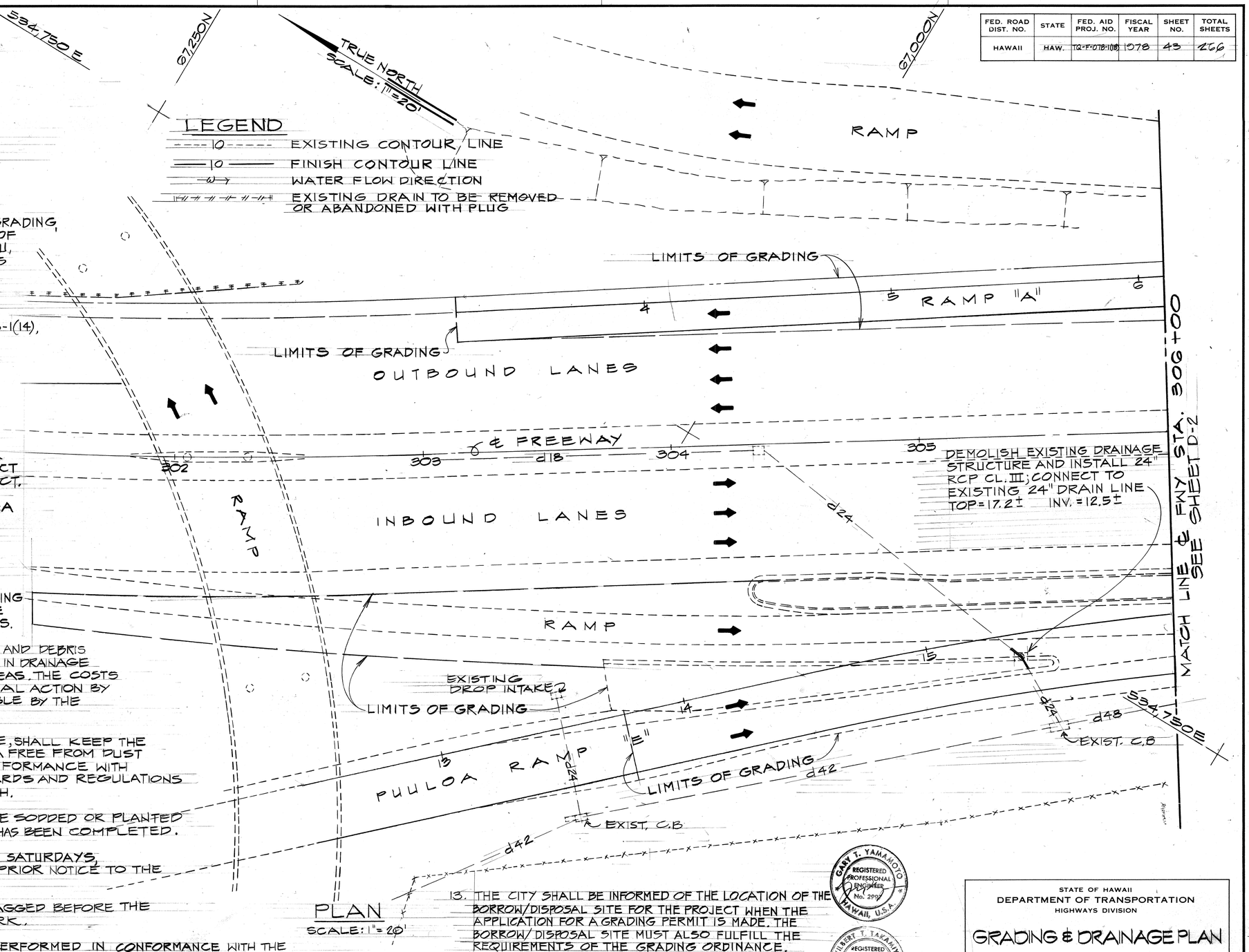

PLAN
SCALE: 1" = 20'

AREA TO BE GRADED = 0.55 ACRES

APPROVED FOR GRADING ONLY

L. Young 8/9/78
CHIEF, DIVISION OF ENGINEERING DATE

GARY T. YAMAMOTO REGISTERED PROFESSIONAL ENGINEER No. 299 HAWAII, U.S.A.

WILBERT T. TAKAMIYA REGISTERED PROFESSIONAL ENGINEER No. 1684 HAWAII, U.S.A.

THIS WORK WAS PREPARED BY ME OR UNDER MY SUPERVISION

STATE OF HAWAII
DEPARTMENT OF TRANSPORTATION
HIGHWAYS DIVISION

GRADING & DRAINAGE PLAN

MOANALUA ROAD
PUULOA I.C. TO MIDDLE ST. - UNIT 3A
F.A. Proj. No. TQ-F-078-1 (18)

SCALE: AS SHOWN DATE: NOV. 15, 1978

SHEET No. D-1 OF 7 SHEETS

ORIGINAL PLAN — SURVEY PLOTTED BY / DRAWN BY / TRACED BY / DESIGNED BY / QUANTITIES BY / CHECKED BY / DATE / NOTE BOOK / No.

FED. ROAD DIST. NO.	STATE	FED. AID PROJ. NO.	FISCAL YEAR	SHEET NO.	TOTAL SHEETS
HAWAII	HAW.	TQ-F-078-1(18)	1978	44	266

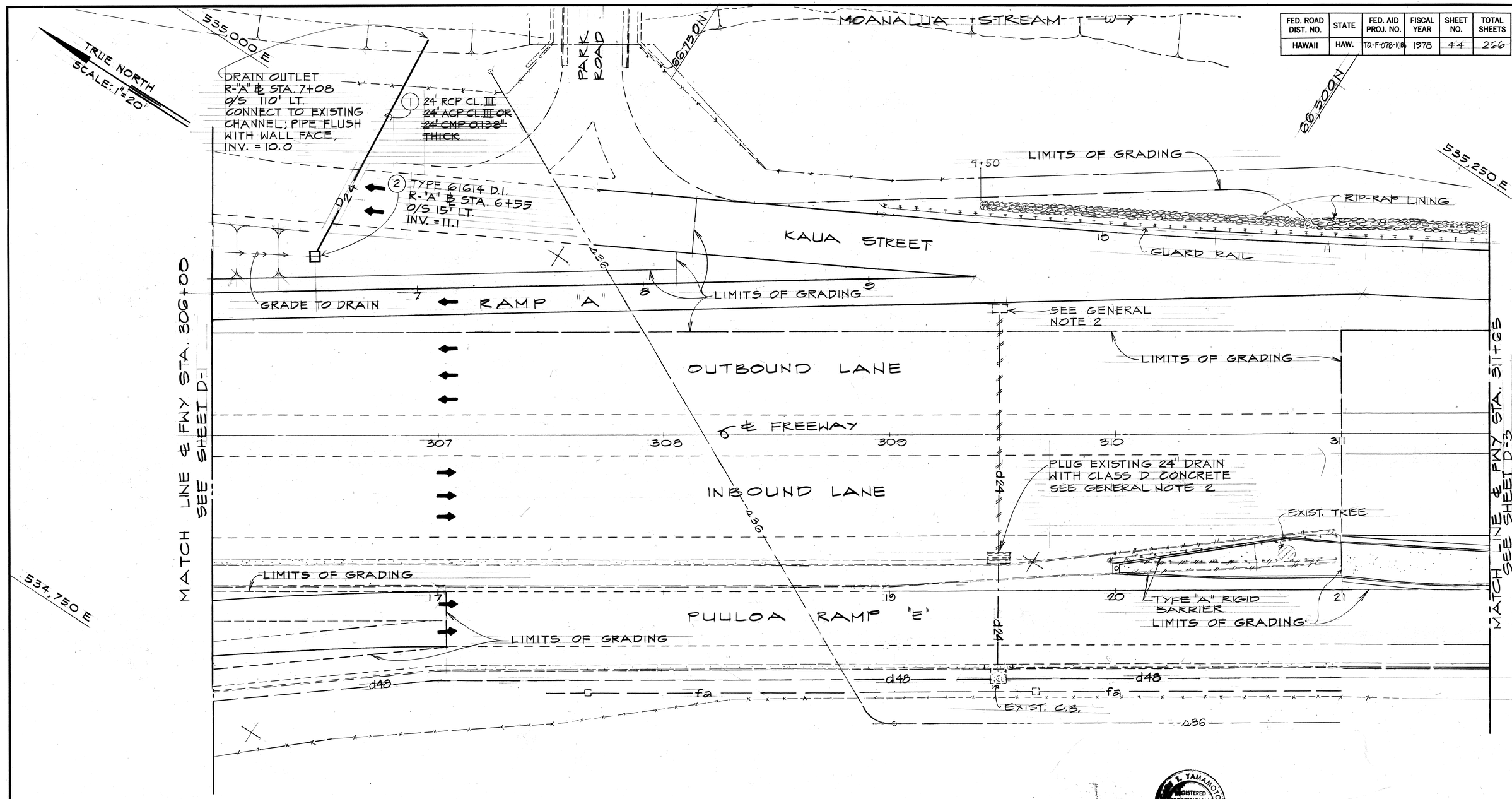

ORIGINAL PLAN		DATE
	SURVEY PLOTTED BY	
	DRAWN BY	"
	TRACED BY	"
NOTE BOOK	DESIGNED BY	"
	QUANTITIES BY	"
No.	CHECKED BY	"

PLAN

SCALE: 1" = 20'

AREA TO BE GRADED = 0.86 ACRES

APPROVED FOR GRADING ONLY:

J. Kyong 8/9/78

CHIEF, DIVISION OF ENGINEERING DATE

T. YAMAMOTO REGISTERED PROFESSIONAL ENGINEER No. 2907 HAWAII, U.S.A.

WILBERT T. TAKANIYA REGISTERED PROFESSIONAL ENGINEER No. 1684 HAWAII, U.S.A.

Wilbert T. Takaniya

THIS WORK WAS PREPARED BY ME OR UNDER MY SUPERVISION

STATE OF HAWAII
DEPARTMENT OF TRANSPORTATION
HIGHWAYS DIVISION

GRADING & DRAINAGE PLAN

MOANALUA ROAD
PUULOA I.C. TO MIDDLE ST. - UNIT 3A
F.A. Proj. No. TQ-F-078-1(18)

SCALE: AS SHOWN DATE: NOV. 15, 1978

SHEET No. D-2 OF 7 SHEETS

FED. ROAD DIST. NO.	STATE	FED. AID PROJ. NO.	FISCAL YEAR	SHEET NO.	TOTAL SHEETS
HAWAII	HAW.	TQ-F-078-1(18)	1978	45	266

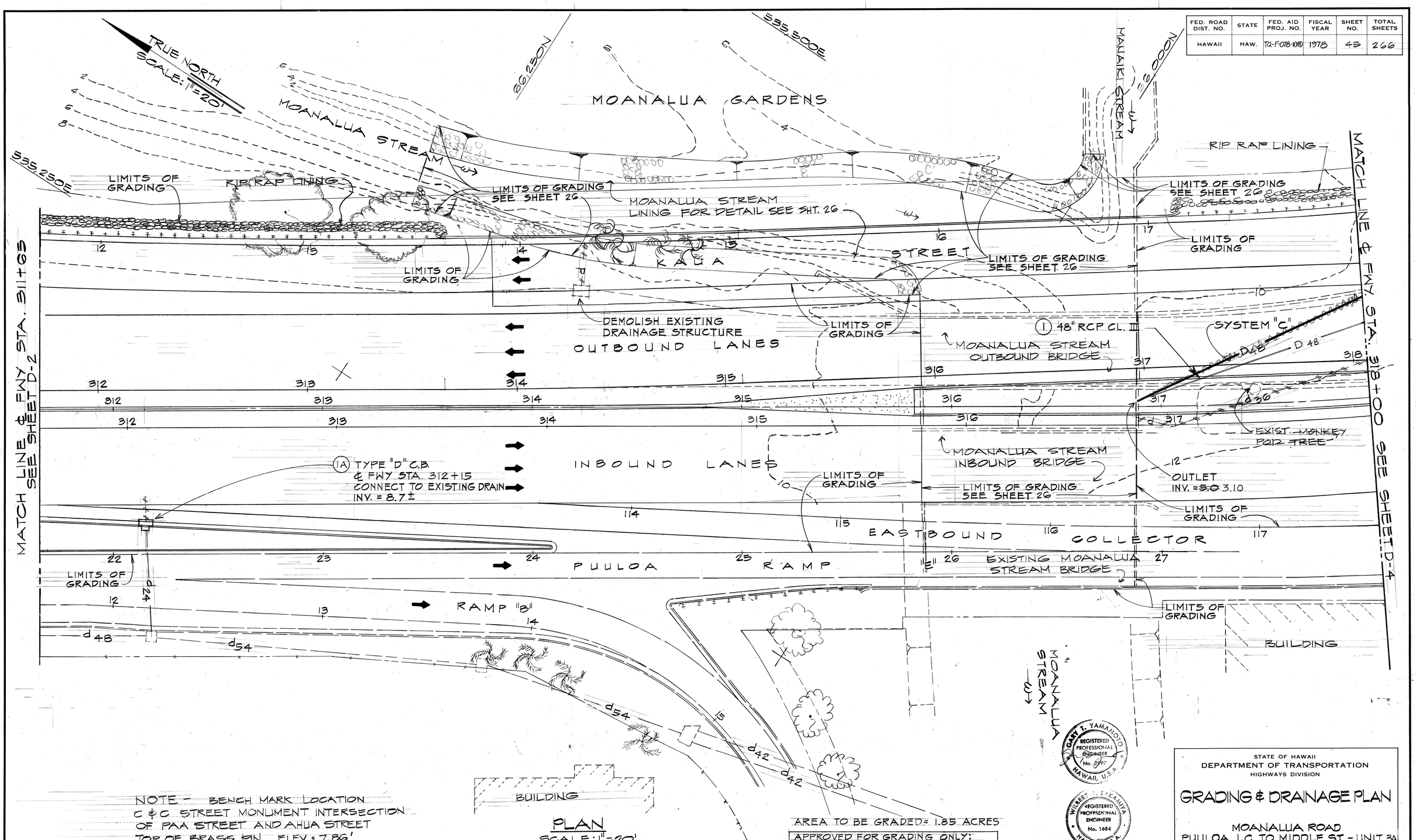

FED. ROAD DIST. NO.	STATE	FED. AID PROJ. NO.	FISCAL YEAR	SHEET NO.	TOTAL SHEETS
HAWAII	HAW.	TQ-F-078-1(18)	1978	46	266

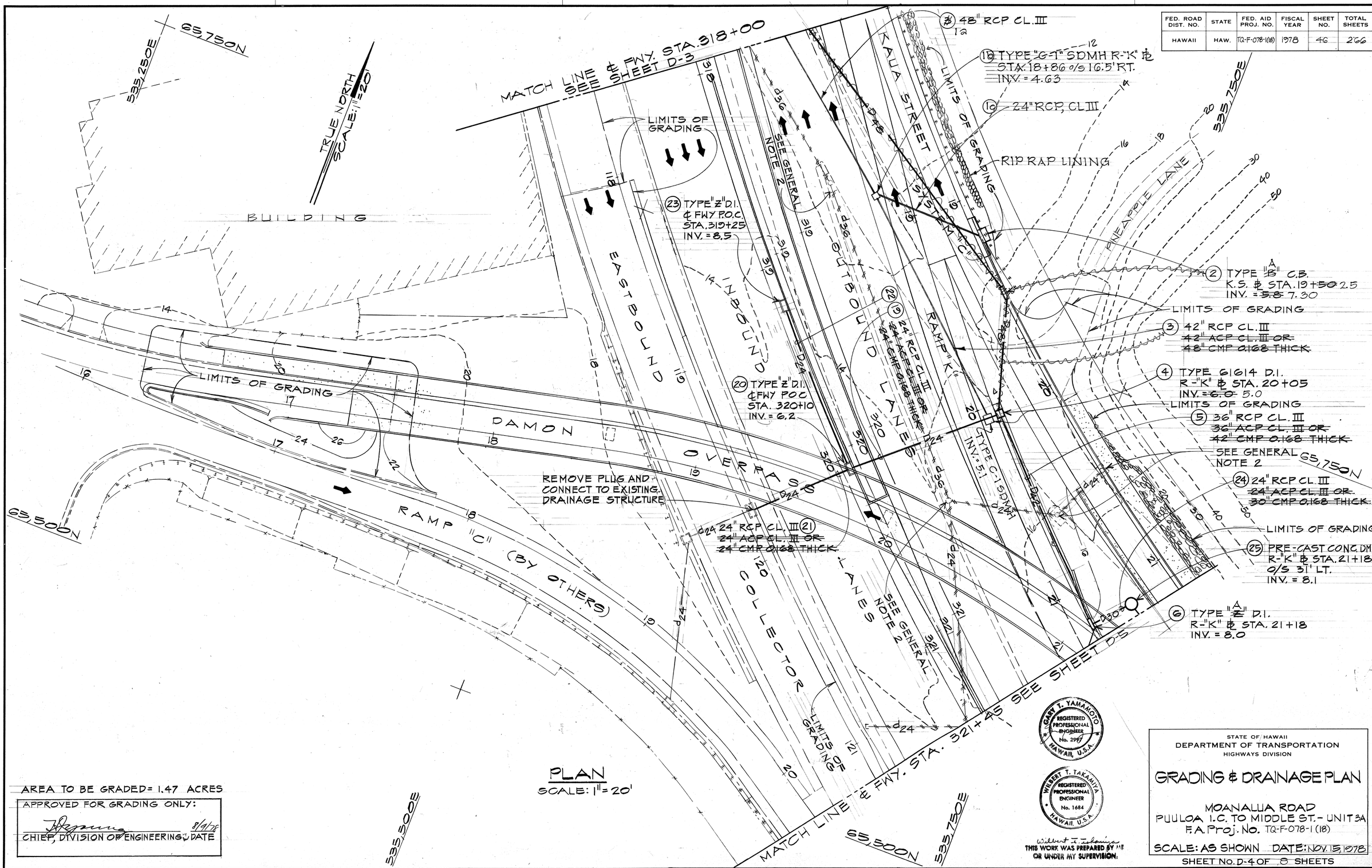

PLAN
SCALE: 1" = 20'

AREA TO BE GRADED = 1.47 ACRES

APPROVED FOR GRADING ONLY:

8/9/78
CHIEF, DIVISION OF ENGINEERING DATE

ORIGINAL PLAN		DATE
	SURVEY PLOTTED BY	
	TRAVERSE BY	
	TRACED BY	
NOTE BOOK	DESIGNED BY	
	QUANTITIES BY	
No.	CHECKED BY	

GARY T. YAMAMOTO
REGISTERED PROFESSIONAL ENGINEER
No. 2997
HAWAII, U.S.A.

WILBERT T. TAKANIYA
REGISTERED PROFESSIONAL ENGINEER
No. 1684
HAWAII, U.S.A.

Wilbert T. Takaniya
THIS WORK WAS PREPARED BY ME OR UNDER MY SUPERVISION.

STATE OF HAWAII
DEPARTMENT OF TRANSPORTATION
HIGHWAYS DIVISION

GRADING & DRAINAGE PLAN

MOANALUA ROAD
PUULOA I.C. TO MIDDLE ST. - UNIT 3A
F.A. Proj. No. TQ-F-078-1(18)

SCALE: AS SHOWN DATE: NOV. 15, 1978

SHEET No. D-4 OF 8 SHEETS

FED. ROAD DIST. NO.	STATE	FED. AID PROJ. NO.	FISCAL YEAR	SHEET NO.	TOTAL SHEETS
HAWAII	HAW.	TQ-F-078-1(18)	1978	47	266

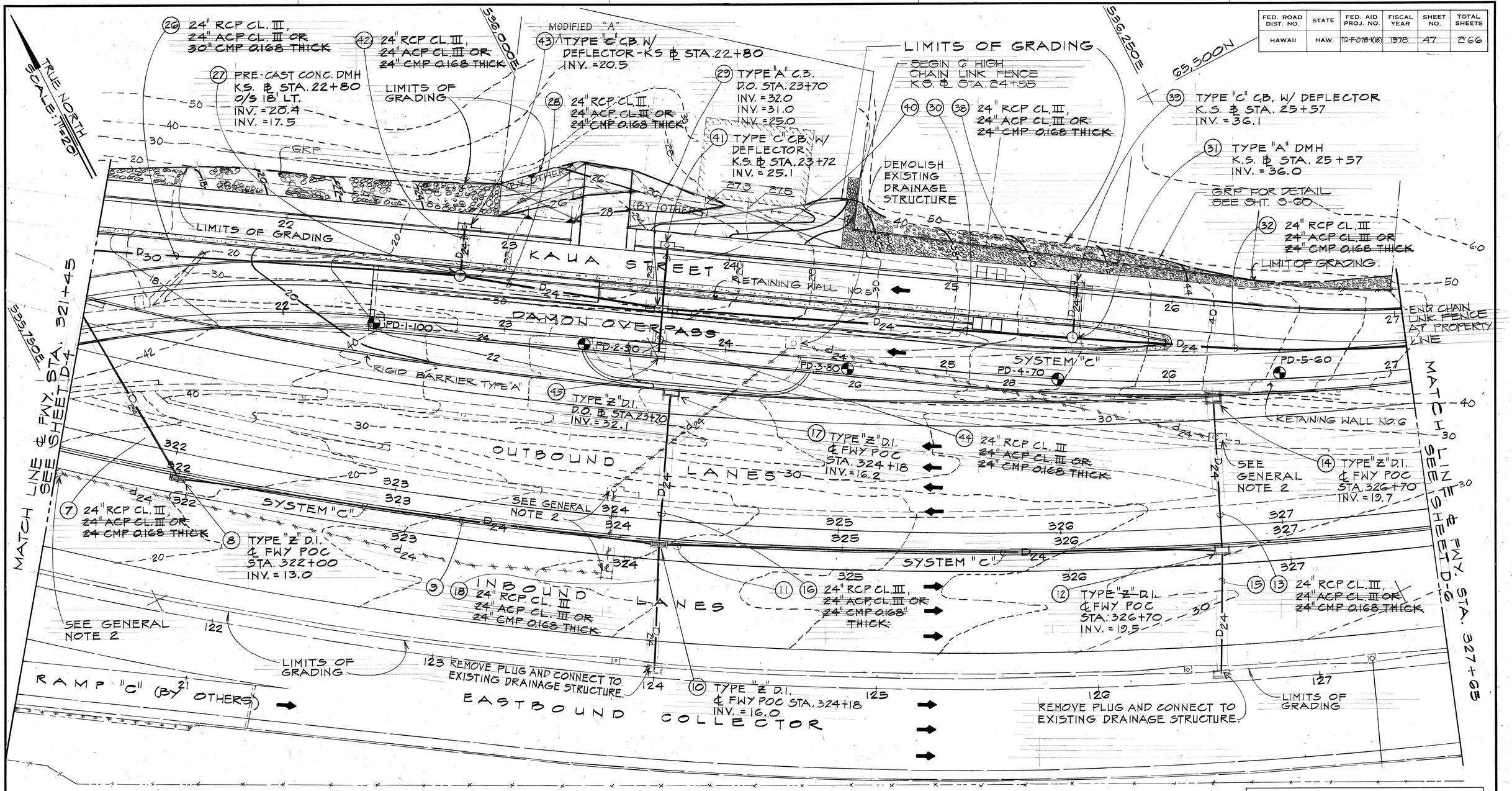

AREA TO BE GRADED = 2.95 ACRES

APPROVED FOR GRADING ONLY:

8/9/78

CHIEF, DIVISION OF ENGINEERING DATE

LEGEND

PD-1-100 PROOF DRILL BORING NO. 1 APPROXIMATE DEPTH 100'

PLAN

SCALE: 1" = 20'

GARY T. YAMAMOTO REGISTERED PROFESSIONAL ENGINEER No. 2997 HAWAII, U.S.A.

HERBERT T. TAKAMIYA REGISTERED PROFESSIONAL ENGINEER No. 1684 HAWAII, U.S.A.

THIS WORK WAS PREPARED BY ME OR UNDER MY SUPERVISION.

STATE OF HAWAII
DEPARTMENT OF TRANSPORTATION
HIGHWAYS DIVISION

GRADING & DRAINAGE PLAN

MOANALUA ROAD
PUULOA I.C. TO MIDDLE ST. - UNIT 3A
F.A. Proj. No. TQ-F-078-1(18)

SCALE: AS SHOWN DATE: NOV. 15, 1978

SHEET NO. D-5 OF 7 SHEETS

ORIGINAL PLAN | NOTE BOOK | No.

SURVEY PLOTTED BY | DRAWN BY | TRACED BY | DESIGNED BY | QUANTITIES BY | CHECKED BY | DATE

FED. ROAD DIST. NO.	STATE	FED. AID PROJ. NO.	FISCAL YEAR	SHEET NO.	TOTAL SHEETS
HAWAII	HAW.	TQ-F-078-1(18)	1978	48	266

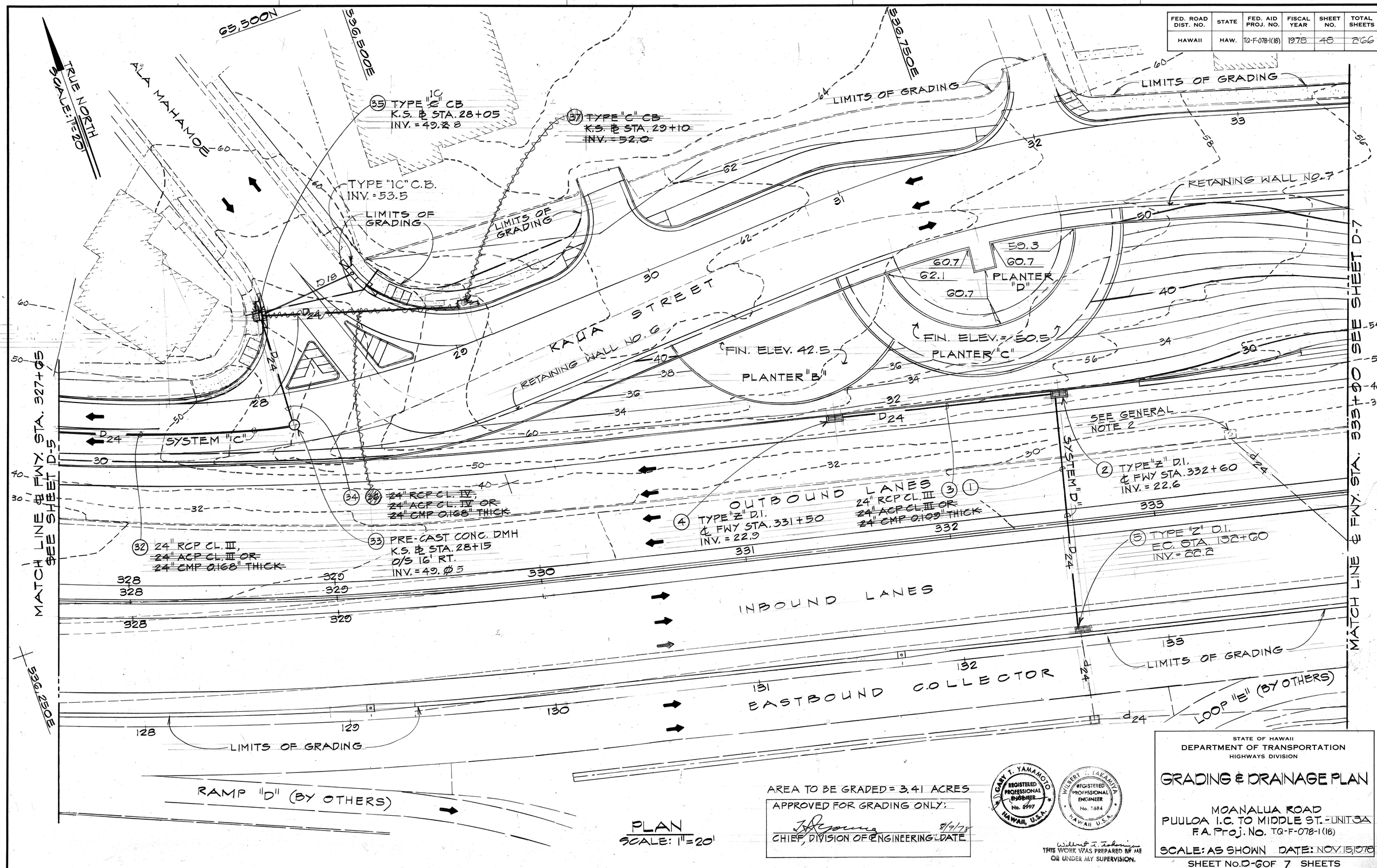

PLAN
SCALE: 1"=20'

AREA TO BE GRADED = 3.41 ACRES

APPROVED FOR GRADING ONLY:

CHIEF, DIVISION OF ENGINEERING — DATE 8/9/78

GARY T. YAMAMOTO — REGISTERED PROFESSIONAL ENGINEER No. 8997 — HAWAII, U.S.A.

WILBERT T. TAKAHIYA — REGISTERED PROFESSIONAL ENGINEER No. 1684 — HAWAII, U.S.A.

THIS WORK WAS PREPARED BY ME OR UNDER MY SUPERVISION.

STATE OF HAWAII
DEPARTMENT OF TRANSPORTATION
HIGHWAYS DIVISION

GRADING & DRAINAGE PLAN

MOANALUA ROAD
PUULOA I.C. TO MIDDLE ST.-UNIT 3A
F.A. Proj. No. TQ-F-078-1(18)

SCALE: AS SHOWN DATE: NOV. 15, 1976

SHEET No. D-6 OF 7 SHEETS

ORIGINAL PLAN		DATE
	SURVEY PLOTTED BY	
	DRAWN BY	
	TRACED BY	
	DESIGNED BY	
NOTE BOOK	QUANTITIES BY	
No.	CHECKED BY	

FED. ROAD DIST. NO.	STATE	FED. AID PROJ. NO.	FISCAL YEAR	SHEET NO.	TOTAL SHEETS
HAWAII	HAW.	TQ-F-078-1(18)	1978	49	266

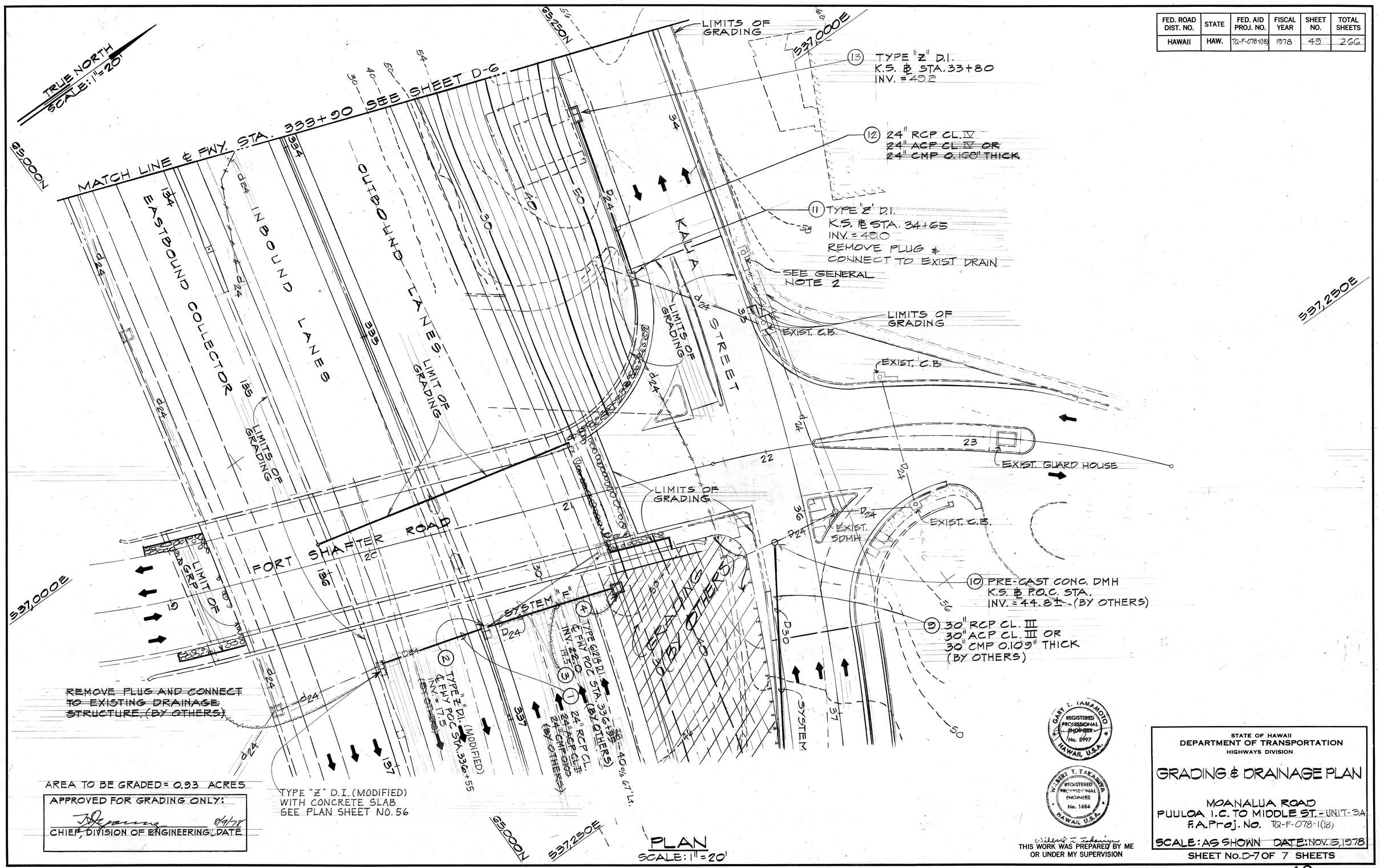

AREA TO BE GRADED = 0.93 ACRES

APPROVED FOR GRADING ONLY:

8/9/78

CHIEF, DIVISION OF ENGINEERING DATE

PLAN
SCALE: 1" = 20'

ORIGINAL PLAN		
	SURVEY PLOTTED BY	DATE
	DRAWN BY	
	TRACED BY	
NOTE BOOK	DESIGNED BY	
	QUANTITIES BY	
No.	CHECKED BY	

GARY T. YAMAMOTO — REGISTERED PROFESSIONAL ENGINEER No. 2997 — HAWAII, U.S.A.

WILBERT T. TAKAMIYA — REGISTERED PROFESSIONAL ENGINEER No. 1684 — HAWAII, U.S.A.

Wilbert T. Takamiya
THIS WORK WAS PREPARED BY ME OR UNDER MY SUPERVISION

STATE OF HAWAII
DEPARTMENT OF TRANSPORTATION
HIGHWAYS DIVISION

GRADING & DRAINAGE PLAN

MOANALUA ROAD
PUULOA I.C. TO MIDDLE ST. - UNIT-3A
F.A. Proj. No. TQ-F-078-1(18)

SCALE: AS SHOWN DATE: NOV. 15, 1978

SHEET No. D-7 OF 7 SHEETS

FED. ROAD DIST. NO.	STATE	FED. AID PROJ. NO.	FISCAL YEAR	SHEET NO.	TOTAL SHEETS
HAWAII	HAW.	TQ-F-078-1(18)	1978	50	266

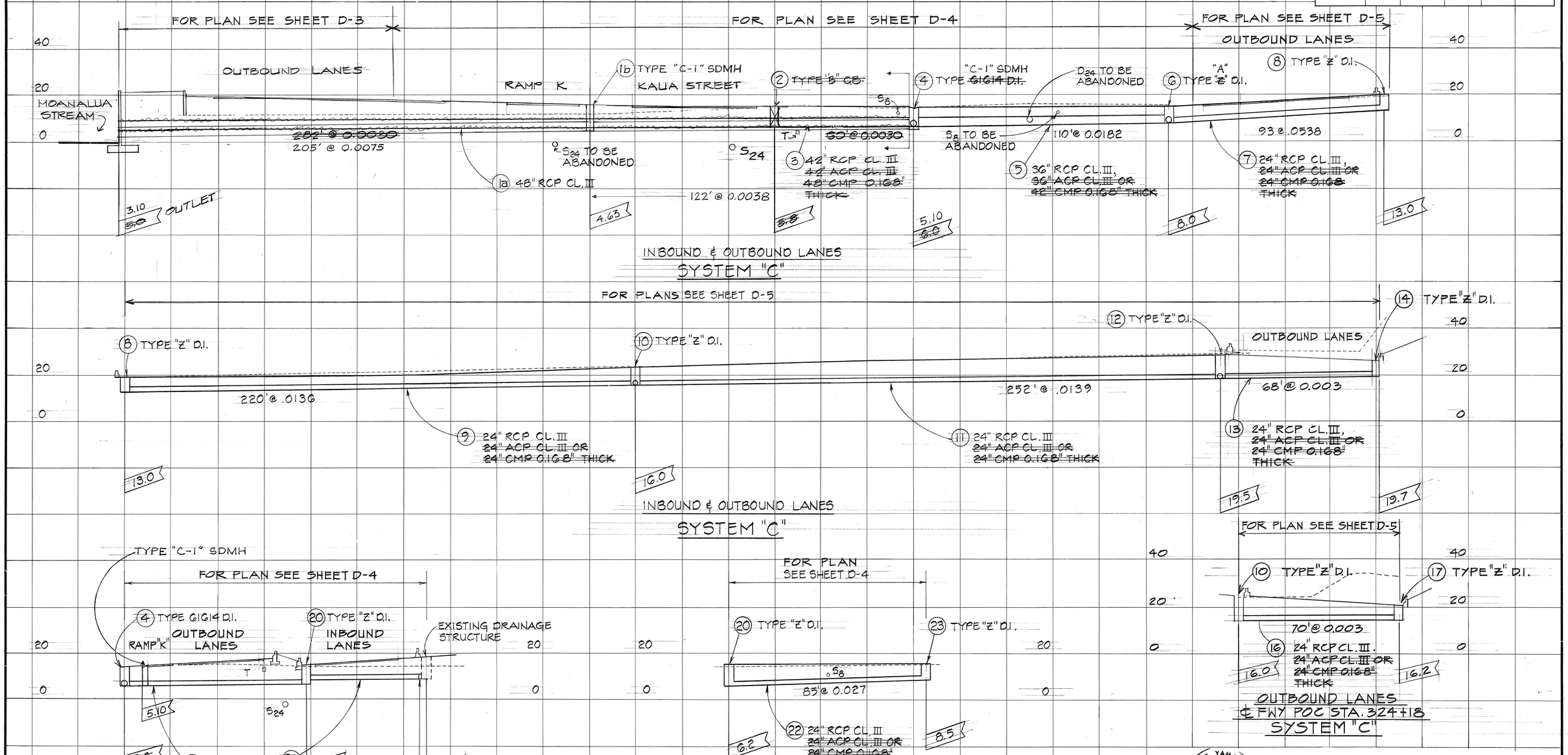

PROFILES

SCALES: HORIZ. 1" = 20'
VERT. 1" = 20'

GARY T. YAMAMOTO
REGISTERED PROFESSIONAL ENGINEER
No. 2997
HAWAII, U.S.A.

WILBERT T. TAKANIYA
REGISTERED PROFESSIONAL ENGINEER
No. 1684
HAWAII, U.S.A.

Wilbert T. Takaniya
THIS WORK WAS PREPARED BY ME OR UNDER MY SUPERVISION

STATE OF HAWAII
DEPARTMENT OF TRANSPORTATION
HIGHWAYS DIVISION

DRAINAGE PROFILE
SYSTEM "C"
MOANALUA ROAD
PUULOA I.C. TO MIDDLE ST. - UNIT 3A
F.A. Proj. NO. TQ-F-078-1(18)

SCALE: AS SHOWN DATE: NOV. 15, 1978

SHEET No. 1 OF 3 SHEETS

ORIGINAL PLAN
SURVEY PLOTTED BY
DRAWN BY
TRACED BY
DESIGNED BY
QUANTITIES BY
CHECKED BY
DATE
NOTE BOOK
No.

FED. ROAD DIST. NO.	STATE	FED. AID PROJ. NO.	FISCAL YEAR	SHEET NO.	TOTAL SHEETS
HAWAII	HAW.	TQ-F-078-1(18)	1978	51	266

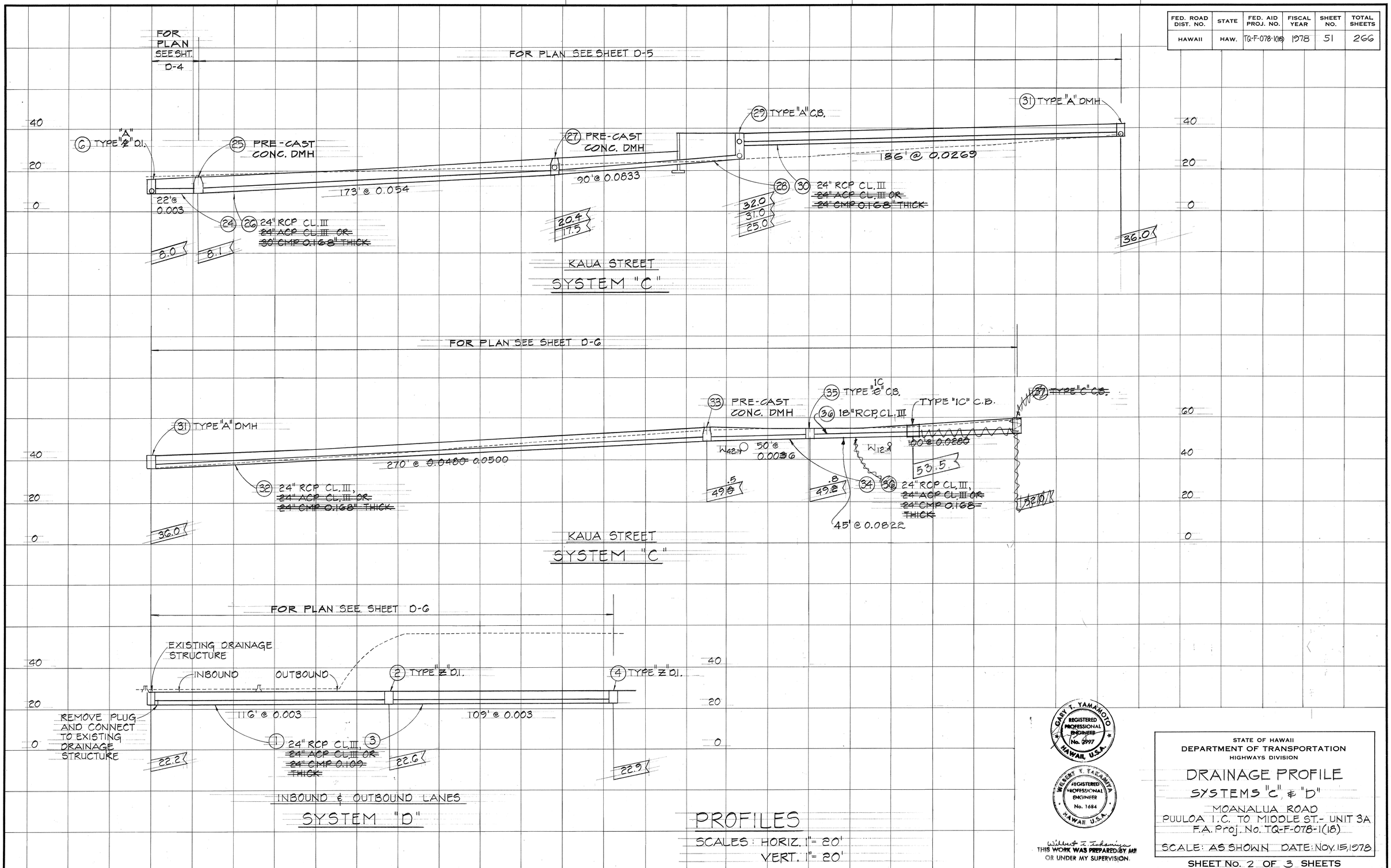

PROFILES

SCALES: HORIZ. 1" = 20'
VERT. 1" = 20'

GARY Y. YAMAMOTO
REGISTERED PROFESSIONAL ENGINEER
No. 2997
HAWAII, U.S.A.

WESLEY Y. TAKAMIYA
REGISTERED PROFESSIONAL ENGINEER
No. 1684
HAWAII, U.S.A.

THIS WORK WAS PREPARED BY ME OR UNDER MY SUPERVISION.

STATE OF HAWAII
DEPARTMENT OF TRANSPORTATION
HIGHWAYS DIVISION

DRAINAGE PROFILE
SYSTEMS "C" & "D"
MOANALUA ROAD
PUULOA I.C. TO MIDDLE ST. - UNIT 3A
F.A. Proj. No. TQ-F-078-1(18)

SCALE: AS SHOWN DATE: NOV. 15, 1978

SHEET No. 2 OF 3 SHEETS

ORIGINAL PLAN | NOTE BOOK No. | SURVEY PLOTTED BY | DRAWN BY | TRACED BY | DESIGNED BY | QUANTITIES BY | CHECKED BY | DATE

FED. ROAD DIST. NO.	STATE	FED. AID PROJ. NO.	FISCAL YEAR	SHEET NO.	TOTAL SHEETS
HAWAII	HAW.	TQ-F-078-1(18)	1978	52	266

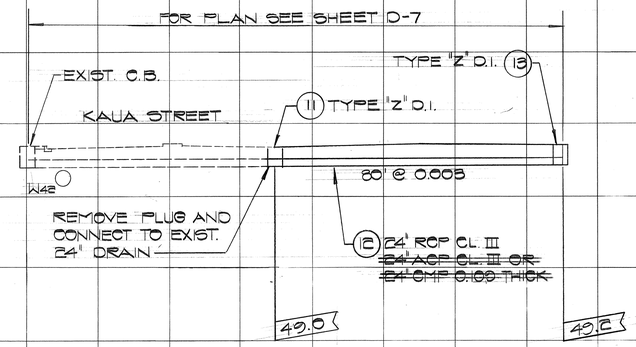

KAUA STREET
SYSTEM "E"

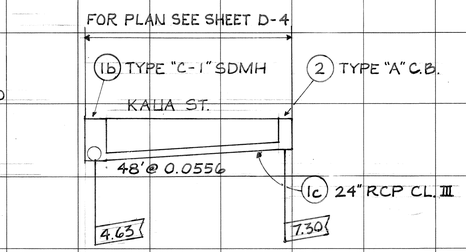

INBOUND & OUTBOUND LANES
SYSTEM "C"

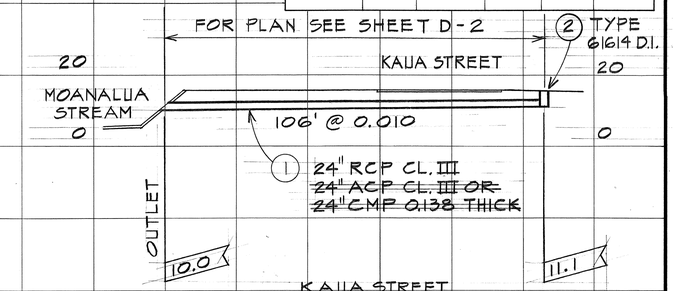

KAUA STREET
℄ R-"A" STA. 6+55
SYSTEM "A"

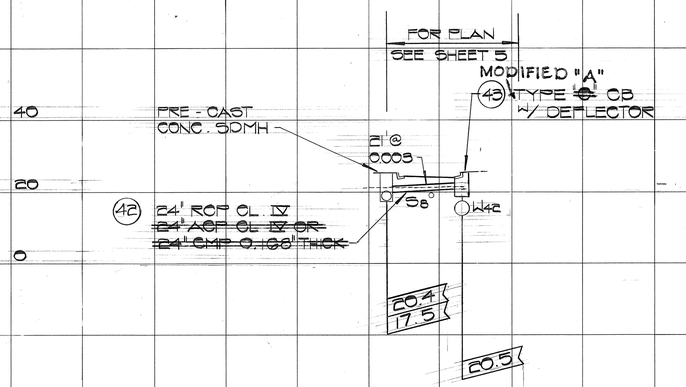

KAUA STREET
SYSTEM "C"

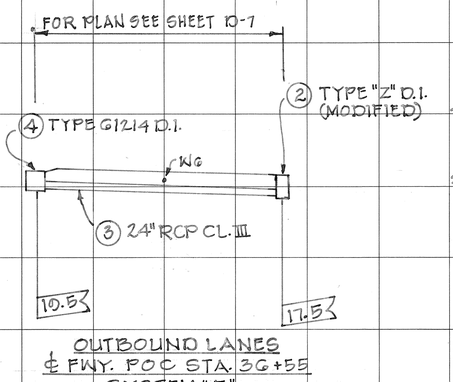

OUTBOUND LANES
℄ FWY. POC STA. 36+55
SYSTEM "F"

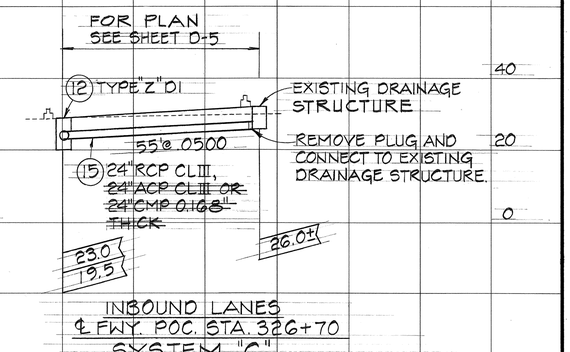

INBOUND LANES
℄ FWY. POC. STA. 326+70
SYSTEM "C"

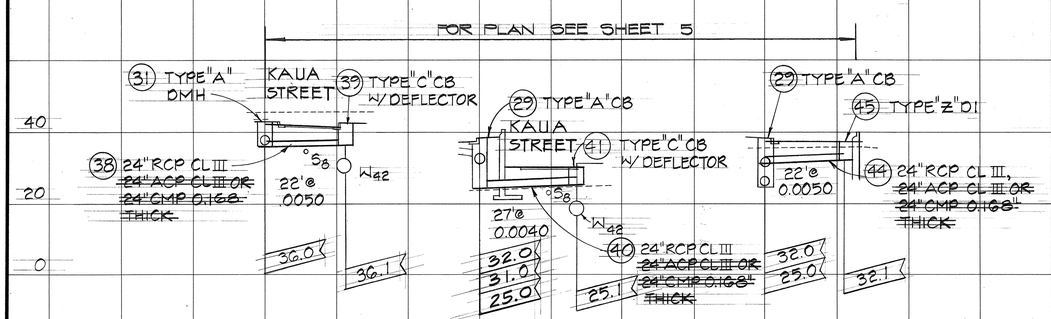

KAUA STREET
SYSTEM "C"

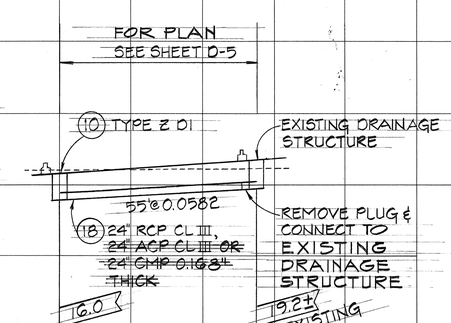

INBOUND LANES
℄ FWY. POC STA. 324+18
SYSTEM "C"

PROFILES

SCALES: 1" = 20'
1" = 20'

ORIGINAL PLAN	DATE
SURVEY PLOTTED BY	
DRAWN BY	
TRACED BY	
DESIGNED BY	
QUANTITIES BY	
CHECKED BY	
NOTE BOOK	
No.	

GARY T. YAMAMOTO — REGISTERED PROFESSIONAL ENGINEER No. 2997 — HAWAII, U.S.A.

WILBERT T. TAKAHIRA — REGISTERED PROFESSIONAL ENGINEER No. 1684 — HAWAII U.S.A.

Wilbert T. Takahira
THIS WORK WAS PREPARED BY ME OR UNDER MY SUPERVISION.

STATE OF HAWAII
DEPARTMENT OF TRANSPORTATION
HIGHWAYS DIVISION

DRAINAGE PROFILE
SYSTEMS "A", "C" & I
MOANALUA ROAD
PUULOA I.C. TO MIDDLE ST. - UNIT 3A
F.A. Proj. No. TQ-F-078-1(18)

SCALE: AS SHOWN DATE: NOV. 15, 1978

SHEET No. 3 OF 3 SHEETS

See SA7

See SA7

FED. ROAD DIST. NO.	STATE	FED. AID PROJ. NO.	FISCAL YEAR	SHEET NO.	TOTAL SHEETS
HAWAII	HAW.	TQ-F-018-1(18)	1978	53	266

DRAINAGE SUMMARY

STRUCTURES — ESTIMATED QUANTITIES

DRAINAGE SHEET	ITEM NUMBER	TYPE	STRUCTURE EXCAVATION FOR DRAINAGE SYSTEM	CONCRETE FOR DRAINAGE SYSTEM	CEMENT RUBBLE MASONRY	REINFORCING STEEL FOR DRAINAGE SYSTEM	BED COURSE MATERIAL	24-INCH RCP, CL. III	48-INCH RCP, CL. III	24-INCH CMP, SHT. THICK. 0.109 INCH OR 24-INCH RCP, CL. III OR 24-INCH ACP, CL. III	24-INCH CMP, SHT. THICK. 0.138 INCH OR 24-INCH RCP, CL. III OR 24-INCH ACP, CL. III	24-INCH CMP, SHT. THICK. 0.168 INCH OR 24-INCH RCP, CL. III OR 24-INCH ACP, CL. III	24-INCH CMP, SHT. THICK. 0.168 INCH OR 24-INCH RCP, CL. IV OR 24-INCH ACP, CL. IV	30-INCH CMP, SHT. THICK. 0.168 INCH OR 24-INCH RCP W/ CONC. COLL. CL. III OR 24-INCH ACP W/ CONC. COLL. CL. III	42-INCH CMP, SHT. THICK. 0.168 INCH OR 36-INCH RCP, CL. III OR 36-INCH ACP, CL. III	48-INCH CMP, SHT. THICK. 0.168 INCH OR 42-INCH RCP, CL. III OR 42-INCH ACP, CL. III	PRECAST CONCRETE STORM DRAIN MANHOLE	TYPE "A" C.I. FRAME AND COVER	TYPE "B" C.I. FRAME AND COVER	TYPE "P" C.I. FRAME AND COVER	TYPE A-12 STEEL FRAME & GRATE	TYPE 61614 STEEL FRAME & GRATE	ITEM NUMBER	DRAINAGE SHEET
		ITEM NO.	206	503		602	603		603		603			603		603				603	603	604	604	604	604	604	604		
			.2020	.0021		.1020	.0011		.1018		.7220	.7224	.7228	.7230	.7304	.7550	.7555	.0370	.2150	.2160	.2170	.2320	.2330		
		UNIT	CU. YD.	CU. YD.	CU. YD.	LB.	CU. YD.	LIN. FT.	LIN. FT.	LIN. FT.	LIN. FT.	LIN. FT.	LIN. FT.	LIN. FT.	LIN. FT.	LIN. FT.	LIN. FT.	LIN. FT.	EACH	EACH	EACH	EACH	EACH		
D-2	1	DRAINLINE	94				21					106												1	D-2
	2	61614 D.I.	1	2.9		100																	1	2	
D-3	1	DRAINLINE	602				107		282															1	D-3
	1A	"D" C.B.	15	4.3		87														1				1A	
D-1								10																	
D-4	2	"C" C.B.	39	9.7		138														1				2	D-4
	3	DRAINLINE	125				21										60							3	
	4	61614 D.I.	17	3.9		33																	1	4	
	5	DRAINLINE	179				32									110								5	
	6	"Z" D.I.	21	5.0		918															2			6	
	19	DRAINLINE	15				15					79												19	
	20	"Z" D.I.	21	5.2		750															2			20	
	21	DRAINLINE	44				10					32												21	
	22	DRAINLINE	103				16					85												22	
	23	"Z" D.I.	16	4.1		616															2			23	
	24	DRAINLINE	30				4							22										24	
	25	D.M.H.	16	1.8		151												6			1			25	
D-5	7	DRAINLINE	99				18					93												7	D-5
	8	"Z" D.I.	19	4.8		919															2			8	
	9	DRAINLINE	251				42					220												9	
	10	"Z" D.I.	19	4.6		699															2			10	
	11	DRAINLINE	359				49					252												11	
	12	"Z" D.I.	21	5.2		750															2			12	
	13	DRAINLINE	88				13					68												13	
	14	"Z" D.I.	16	4.1		616															2			14	
	15	DRAINLINE	45				11					55												15	
	16	DRAINLINE	73				13					70												16	

REGISTERED PROFESSIONAL ENGINEER No. 1684 HAWAII U.S.A.

THIS WORK WAS PREPARED BY ME OR UNDER MY SUPERVISION

FED. ROAD DIST. NO.	STATE	FED. AID PROJ. NO.	FISCAL YEAR	SHEET NO.	TOTAL SHEETS
HAWAII	HAW.	TQ-F-078-1(6)	1978	54	266

DRAINAGE SUMMARY

STRUCTURES — ESTIMATED QUANTITIES

DRAINAGE SHEET	ITEM NUMBER	TYPE	206 STRUCTURE EXCAVATION FOR DRAINAGE SYSTEM	503 CONCRETE FOR DRAINAGE SYSTEM	508 CEMENT RUBBLE MASONRY	602 REINFORCING STEEL FOR DRAINAGE SYSTEM	603 BED COURSE MATERIAL	603 24-INCH RCP, CL. III	603 48-INCH RCP, CL. III	603 24-INCH CMP, SHT. THICK. 0.109 INCH OR 24-INCH RCP, CL. III OR 24-INCH ACP, CL. III	603 24-INCH CMP, SHT. THICK. 0.138 INCH OR 24-INCH RCP, CL. III OR 24-INCH ACP, CL. III	603 24-INCH CMP, SHT. THICK. 0.168 INCH OR 24-INCH RCP, CL. III OR 24-INCH ACP, CL. III	603 24-INCH CMP, SHT. THICK. 0.168 INCH OR 24-INCH RCP, CL. IV OR 24-INCH ACP, CL. IV	603 30-INCH CMP, SHT. THICK. 0.168 INCH OR 24-INCH RCP W/ CONC. COLL. CL. III OR 24-INCH ACP W/ CONC. COLL. CL. III	603 42-INCH CMP, SHT. THICK. 0.168 INCH OR 36-INCH RCP, CL. III OR 36-INCH ACP, CL. III	603 48-INCH CMP, SHT. THICK. 0.168 INCH OR 42-INCH RCP, CL. III OR 42-INCH ACP, CL. III	604 PRECAST CONCRETE STORM DRAIN MANHOLE	604 TYPE "A" C.I. FRAME AND COVER	604 TYPE "B" C.I. FRAME AND COVER	604 TYPE "P" C.I. FRAME AND COVER	604 TYPE A-12 STEEL FRAME & GRATE	604 TYPE 61614 STEEL FRAME & GRATE	ITEM NUMBER	DRAINAGE SHEET
		ITEM NO.	.2020	.0021	.0100	.1020	.0011	.1010	.1018	.7220	.7224	.7228	.7230	.7304	.7550	.7555	.0370	.2150	.2160	.2170	.2320	.2330		
		UNIT	CU. YD.	CU. YD.	CU. YD.	LB.	CU. YD.	LIN. FT.	LIN. FT.	LIN. FT.	LIN. FT.	LIN. FT.	LIN. FT.	LIN. FT.	LIN. FT.	LIN. FT.	LIN. FT.	EACH	EACH	EACH	EACH	EACH		
D-5	17	"Z" D.I.	12	3.2		498															2		17	D-5
	18	DRAINLINE	37				11					55											18	
	26	DRAINLINE	217				33							173									26	
	27	D.M.H.	10	2.1		209											3			1			27	
	28	DRAINLINE	40				17					30											28	
	29	"A" C.B.		11.7		155													1				29	
	30	DRAINLINE	1				36					186											30	
	31	"A" D.M.H.		3.2		139												1					31	
	32	DRAINLINE	110				52					270											32	
	38	DRAINLINE	20				4					22											38	
	39	"C" C.B.	20	5.8		114													1				39	
	40	DRAINLINE					5					27											40	
	41	"C" C.B.		5.2		114													1				41	
	42	DRAINLINE	3				4						21										42	
	43	"C" C.B.	4	5.5		114													1				43	
	44	DRAINLINE	14				4					22											44	
	45	"Z" D.I.	10	3.2		498															2		45	
D-6	1	DRAINLINE	111				22			116													1	D-6
	2	"Z" D.I.	14	3.7		565															2		2	
	3	DRAINLINE	111				21			109													3	
	4	"Z" D.I.	15	3.8		565															2		4	
	33	D.M.H.	10	1.9		165											3			1			32	
	34	DRAINLINE	44				10						50										33	
	35	"C" C.B.	22	6.1		122													1				34	
	36	DRAINLINE	104				19						100											
	37	"C" C.B.	26	7.3		122													1					

GARY T. YAMAMOTO — REGISTERED PROFESSIONAL ENGINEER No. 4997 — HAWAII, U.S.A.

WILBERT T. TAKAMIYA — REGISTERED PROFESSIONAL ENGINEER No. 1684 — HAWAII, U.S.A.

Wilbert T. Takamiya

THIS WORK WAS PREPARED BY ME OR UNDER MY SUPERVISION

FED. ROAD DIST. NO.	STATE	FED. AID PROJ. NO.	FISCAL YEAR	SHEET NO.	TOTAL SHEETS
HAWAII	HAW.	TQ-F-018-1(18)	1978	55	266

DRAINAGE SUMMARY

STRUCTURES — ESTIMATED QUANTITIES

DRAINAGE SHEET	ITEM NUMBER	ITEM NO.	206	503	602	603	603	603	603	603	603	603	603	603	603	603	604	604	604	604	604	604	ITEM NUMBER	DRAINAGE SHEET
			.2020	.0021	.1020	.0011	.1010	.1018	.7220	.7224	.7228	.7230	.7304	.7550	.7555	.0370	.2150	.2160	.2170	.2320	.2330			
		TYPE	STRUCTURE EXCAVATION FOR DRAINAGE SYSTEM	CONCRETE FOR DRAINAGE SYSTEM	REINFORCING STEEL FOR DRAINAGE SYSTEM	BED COURSE MATERIAL	24-INCH RCP, CL. III	48-INCH RCP, CL. III	24-INCH CMP, SHT. THICK. 0.109 INCH OR 24-INCH RCP, CL. III OR 24-INCH ACP, CL. III	24-INCH CMP, SHT. THICK. 0.138 INCH OR 24-INCH RCP, CL. III OR 24-INCH ACP, CL. III	24-INCH CMP, SHT. THICK. 0.168 INCH OR 24-INCH RCP, CL. III OR 24-INCH ACP, CL. III	24-INCH CMP, SHT. THICK. 0.168 INCH OR 24-INCH RCP, CL. IV OR 24-INCH ACP, CL. IV	30-INCH CMP, SHT. THICK. 0.168 INCH OR 24-INCH RCP W/ CONC. COLL. CL. III OR 24-INCH ACP W/ CONC. COLL. CL. III	42-INCH CMP, SHT. THICK. 0.168 INCH OR 36-INCH RCP, CL. III OR 36-INCH ACP, CL. III	48-INCH CMP, SHT. THICK. 0.168 INCH OR 42-INCH RCP, CL. III OR 42-INCH ACP, CL. III	PRECAST CONCRETE STORM DRAIN MANHOLE	TYPE "A" C.I. FRAME AND COVER	TYPE "B" C.I. FRAME AND COVER	TYPE "P" C.I. FRAME AND COVER	TYPE A-12 STEEL FRAME & GRATE	TYPE 61614 STEEL FRAME & GRATE		
		UNIT	CU. YD.	CU. YD.	LB.	CU. YD.	LIN. FT.	LIN. FT.	LIN. FT.	LIN. FT.	LIN. FT.	LIN. FT.	LIN. FT.	LIN. FT.	LIN. FT.	UN. FT.	EACH	EACH	EACH	EACH	EACH		
D-6	5	"Z" D.I.	16	4.1	595														2					D-6
D-7	11	"Z" D.I.	12	3.1	498														2					D-7
	12	DRAINLINE	70			15			80															
	13	"Z D.I.	14	3.8	565														2					
25		"D" C.B.	13	3.8	82													1						25
25		DRAINLINE	67			14			72															25
72		"C" D.I.	7	1.9															1					72
		TOTAL	3614	133.0	10,897	630	10	282	377	106	1646	175	195	110	60	12	1	8	3	20	2			

WILBERT T. TSUKAMIZA
REGISTERED PROFESSIONAL ENGINEER
No. 1684
HAWAII U.S.A.

Wilbert T. Tsukamiza
THIS WORK WAS PREPARED BY ME OR UNDER MY SUPERVISION

FED. ROAD DIST. NO.	STATE	FED. AID PROJ. NO.	FISCAL YEAR	SHEET NO.	TOTAL SHEETS
HAWAII	HAW.	TQ-F-078-1(18)	1978	56	266

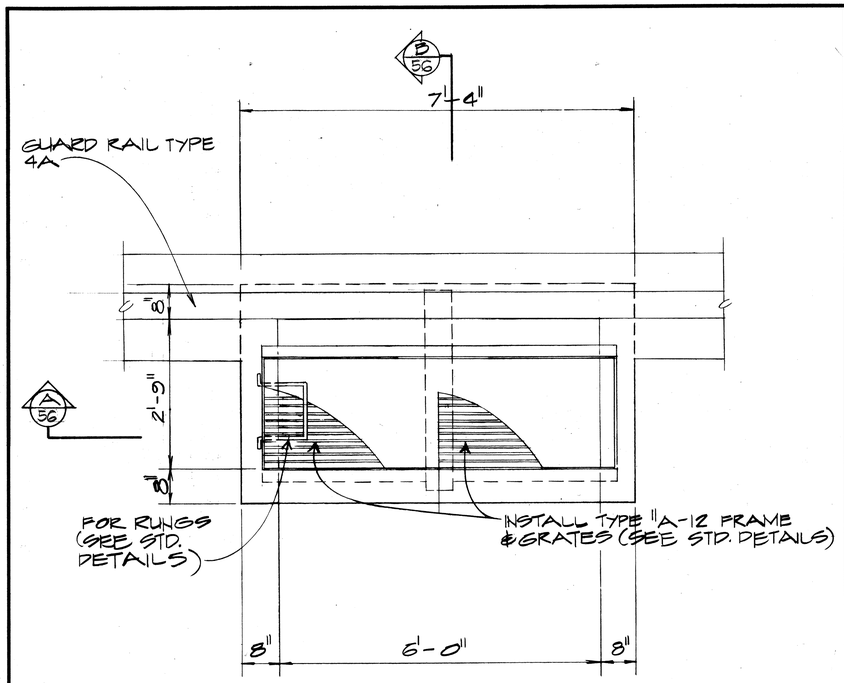

PLAN

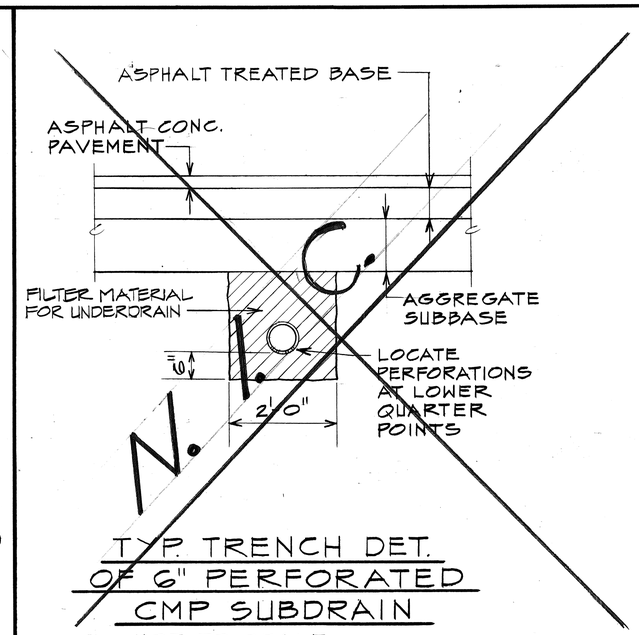

TYP. TRENCH DET. OF 6" PERFORATED CMP SUBDRAIN

NOT TO SCALE

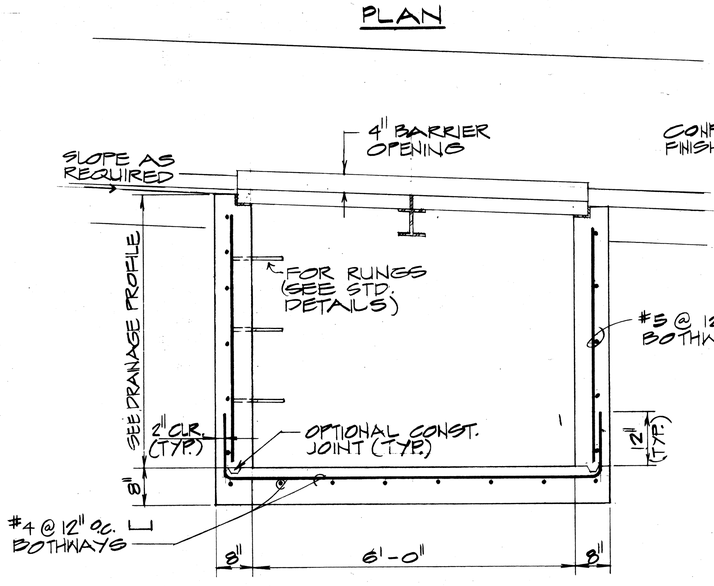

SECTION A 56

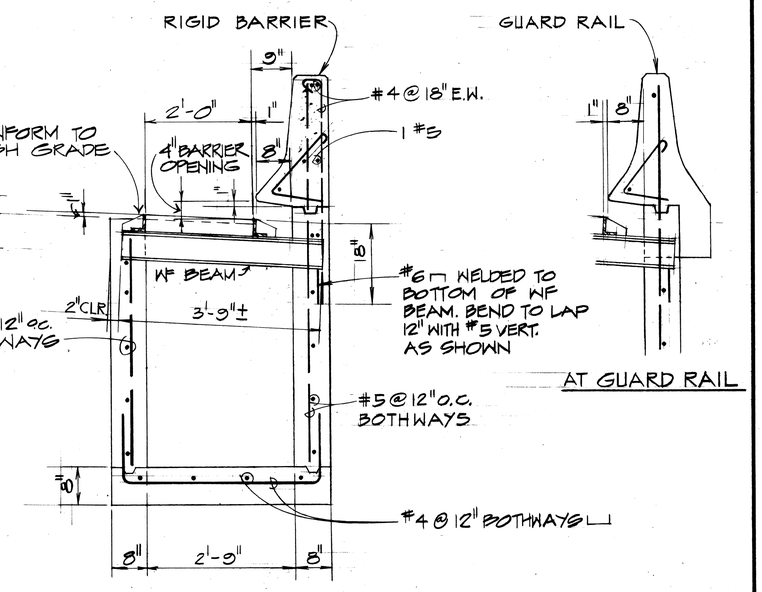

SECTION B 56

AT GUARD RAIL

DROP INTAKE TYPE "Z"

SCALE: 3/4" = 1'-0"

GENERAL NOTES:

1. PAYMENT FOR MISCELLANEOUS ITEMS SUCH AS ROCK SAND RUNGS ETC. IS TO BE INCIDENTAL TO CONCRETE FOR DRAINAGE SYSTEM.
2. RUNGS SHALL NOT BE INSTALLED OVER PIPE CONNECTIONS AND THE LOWEST RUNG SHALL NOT BE MORE THAN 24" ABOVE THE INVERT.
3. REINFORCED CONCRETE DESIGN DATA: f_c' = 3,000 PSI (28 DAYS)
   f_y = 40,000 PSI
   DEFORMED BARS
4. FOR SPLICES NOT DETAILED, OVERLAP BARS 24 BAR DIAMETER OR 12" MINIMUM; STAGGER ALL SPLICES AS APPROVED BY THE ENGINEER.
5. UNLESS SHOWN OTHERWISE WALL REINFORCING BARS WILL BE #5 @ 12" O.C. MINIMUM BOTH DIRECTIONS CENTERED IN SLAB AND AND BENT INTO TOP SLAB WHERE APPLICABLE.
6. ALL VERTICAL WALL REINFORCING BARS TO BE BENT INTO TOP SLAB A MINIMUM OF 12".
7. BEND WALL REINFORCEMENT AROUND PIPE CULVERT WHERE APPLICABLE.
8. SLAB REINFORCEMENT TO BE CENTERED.
9. ALL CONCRETE SHALL BE CLASS "A" UNLESS OTHERWISE NOTED.

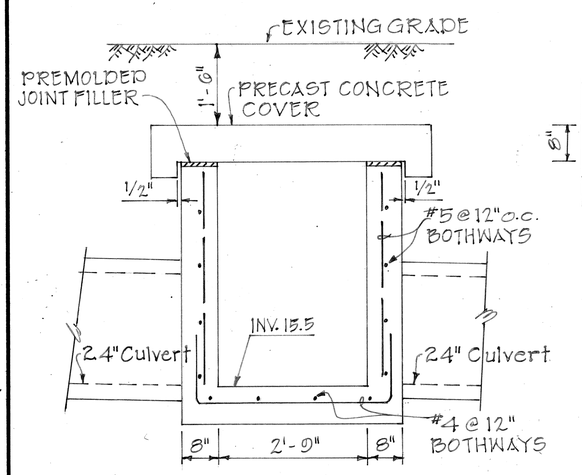

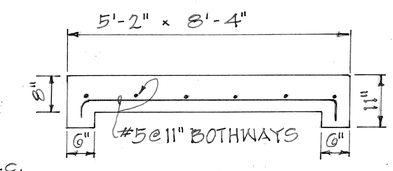

PRECAST CONC. COVER

DROP INTAKE TYPE "Z" MODIFICATION FOR CONC. COVER

E.C. STA. 136+50

Scale: 3/4" = 1'-0"

GARY T. YAMAMOTO
REGISTERED PROFESSIONAL ENGINEER
No. 2917
HAWAII, U.S.A.

WILBERT T. TAKAHIRA
REGISTERED PROFESSIONAL ENGINEER
No. 1684
HAWAII, U.S.A.

Wilbert T. Takahira

THIS WORK WAS PREPARED BY ME OR UNDER MY SUPERVISION.

STATE OF HAWAII
DEPARTMENT OF TRANSPORTATION
HIGHWAYS DIVISION

DRAINAGE DETAILS

MOANALUA ROAD
PUULOA I.C. TO MIDDLE ST. - UNIT 3A
F.A. PROJ. NO. TQ-F-078-1(18)

SCALE: AS SHOWN DATE: NOV. 15, 1978

SHEET No. 1 OF 10 SHEETS

ORIGINAL PLAN	SURVEY PLOTTED BY	DATE
	DRAWN BY	
	TRACED BY	
NOTE BOOK	DESIGNED BY	
	QUANTITIES BY	
No.	CHECKED BY	

FED. ROAD DIST. NO.	STATE	FED. AID PROJ. NO.	FISCAL YEAR	SHEET NO.	TOTAL SHEETS
HAWAII	HAW.	TQ-F-078-1	1978	57	266

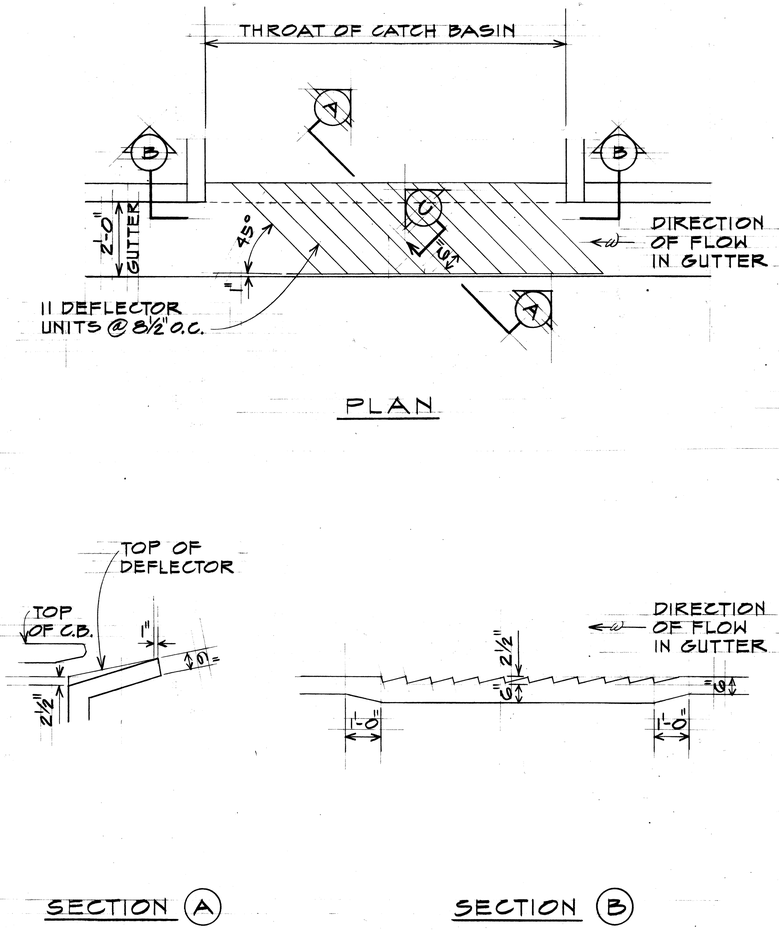

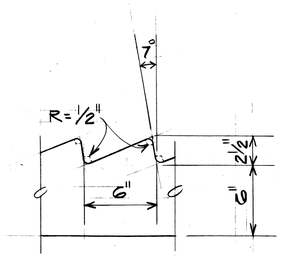

SECTION C

CATCH BASIN DEFLECTOR DETAILS

NOT TO SCALE

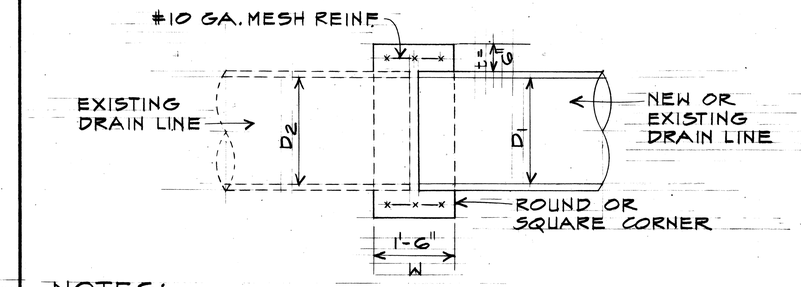

NOTES:

1. DRAIN LINE D_1 AND D_2 MAY BE OF DIFFERENT SIZE AND TYPE.
2. COLLAR INSTALLATION TO BE INCIDENTAL TO PIPE COST.
3. FOR DRAIN LINE CONNECTION TO EXISTING DRAIN BOX MAKE CONCRETE COLLAR t=6", W=6" WITH MESH REINFORCING.

CONCRETE COLLAR CONNECTION

SCALE: 3/4"=1'-0"

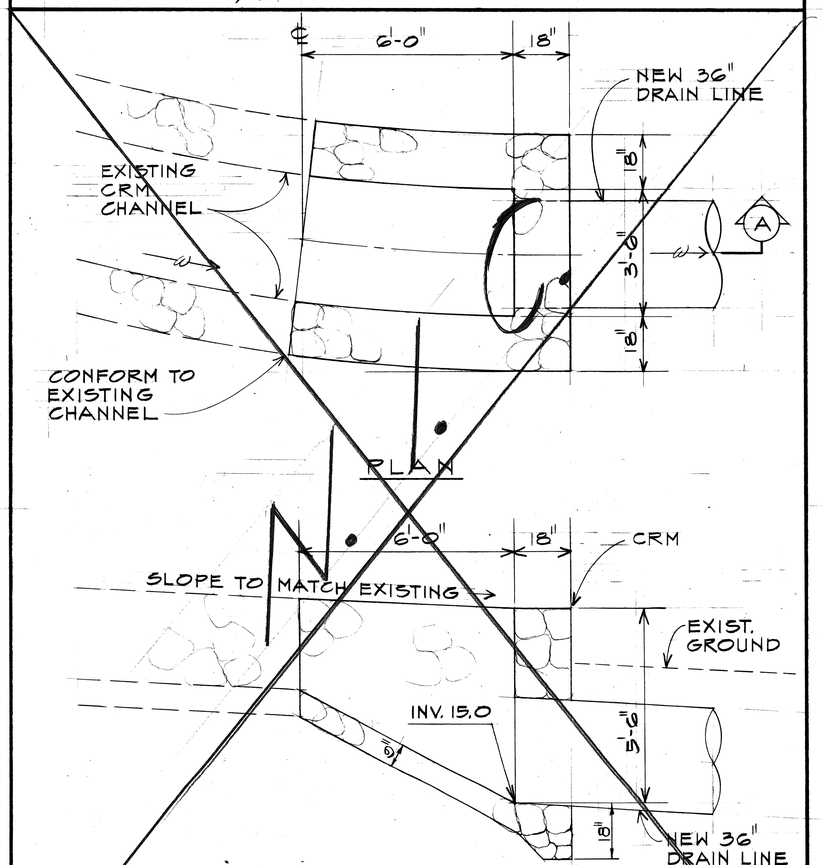

SECTION A

INLET SYSTEM "I"

FOR LOCATION SEE SHEET D-

SCALE: ½"=1'-0"

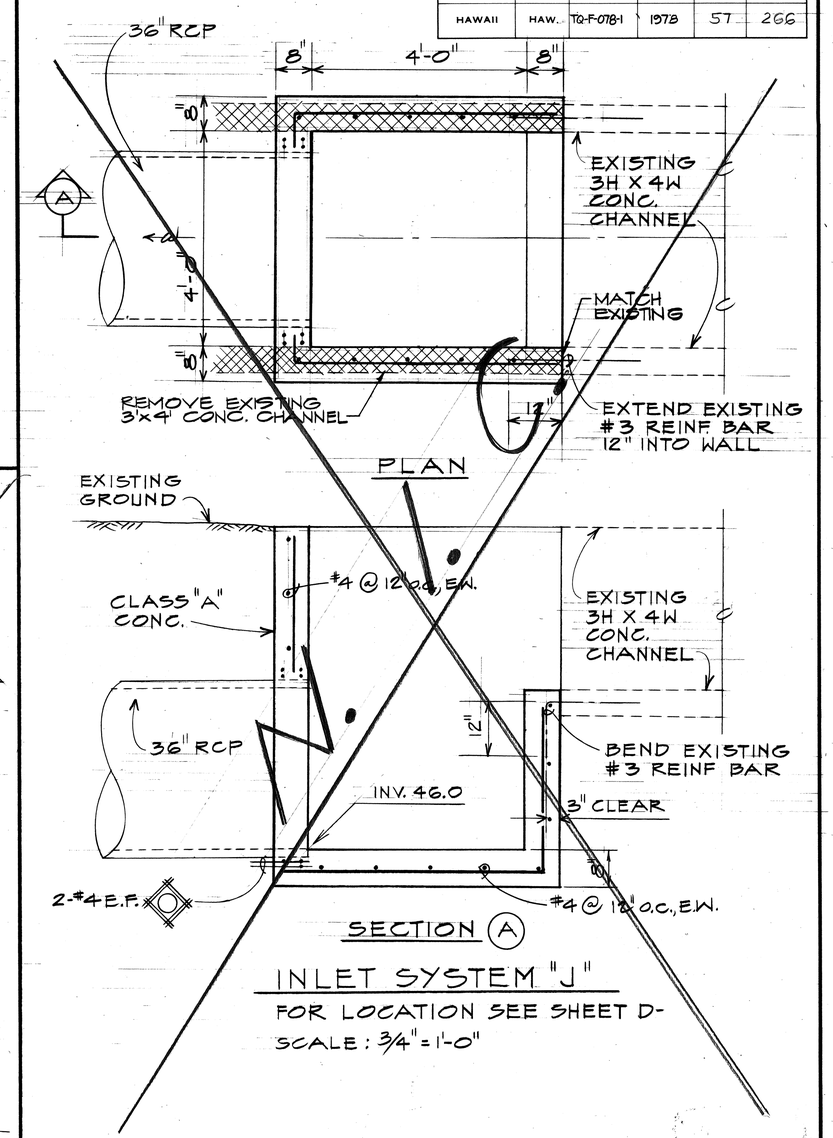

SECTION A

INLET SYSTEM "J"

FOR LOCATION SEE SHEET D-

SCALE: 3/4"=1'-0"

GARY T. YAMAMOTO
REGISTERED PROFESSIONAL ENGINEER
No. 2997
HAWAII, U.S.A.

WILBERT T. TAKAMIYA
REGISTERED PROFESSIONAL ENGINEER
No. 1684
HAWAII, U.S.A.

Wilbert T. Takamiya

THIS WORK WAS PREPARED BY ME OR UNDER MY SUPERVISION.

STATE OF HAWAII
DEPARTMENT OF TRANSPORTATION
HIGHWAYS DIVISION

DRAINAGE DETAILS

MOANALUA ROAD
PUULOA I.C TO MIDDLE ST. - UNIT 3
F.A. Proj. No. TQ-F-078-1(18)

SCALE: AS SHOWN DATE: NOV. 15, 1978

SHEET No. 2 OF 10 SHEETS

ORIGINAL PLAN		DATE
	SURVEY PLOTTED BY	
	DRAWN BY	
	TRACED BY	
	DESIGNED BY	
	QUANTITIES BY	
NOTE BOOK	CHECKED BY	
No.		

2/17/59

FED. ROAD DIST. NO.	STATE	FED. AID PROJ. NO.	FISCAL YEAR	SHEET NO.	TOTAL SHEETS
HAWAII	HAW.	TQ-F-078-1(12)	1978	58	266

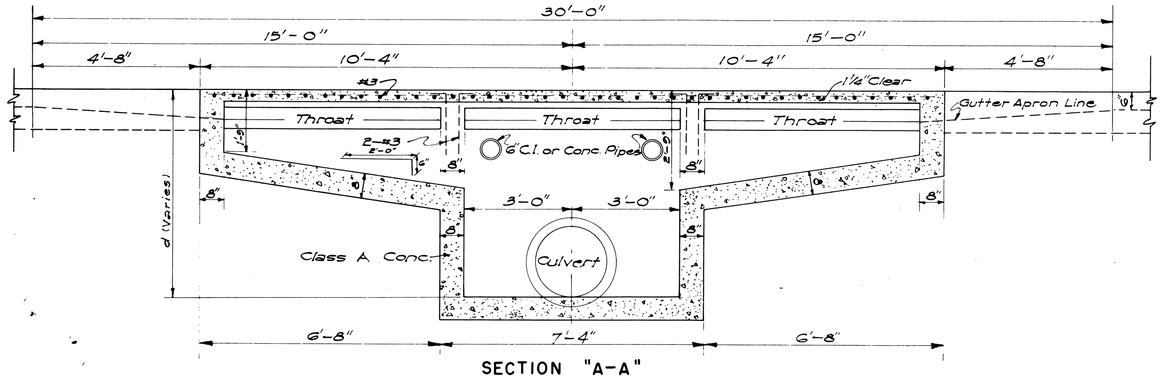

SECTION "A-A"

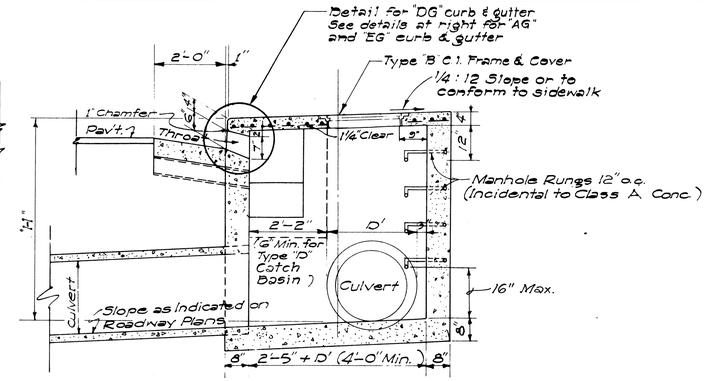

SECTION "B-B"

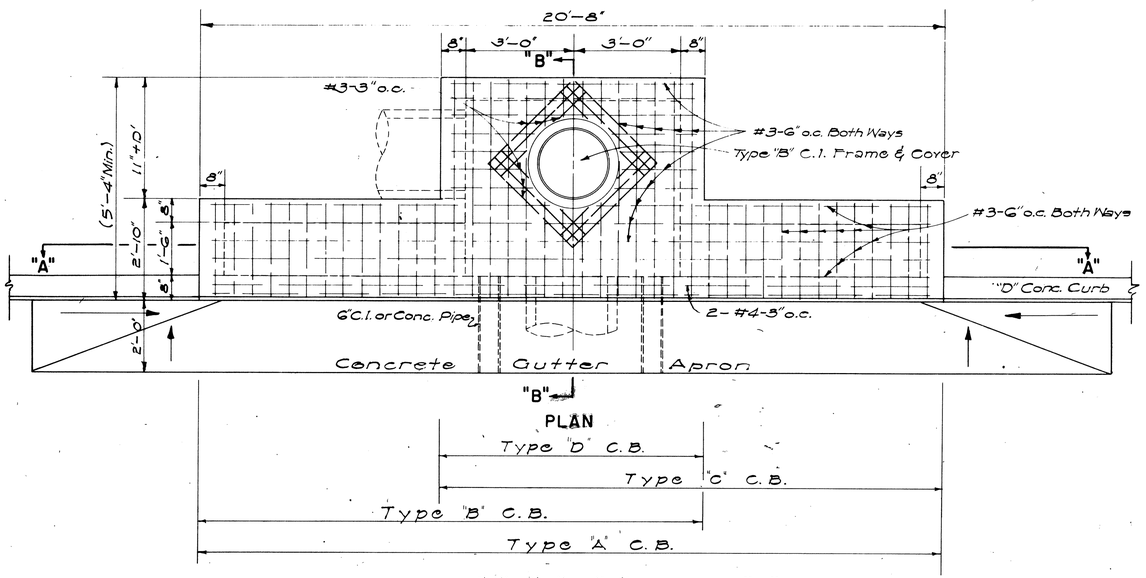

PLAN

DETAILS OF TYPES "A", "B", "C" AND "D" CATCH BASINS

SCALE: 1/2" = 1'-0"

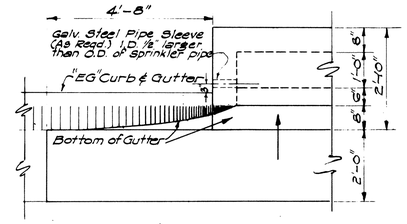

DETAIL OF CATCH BASIN WITH "EG" CURB & GUTTER

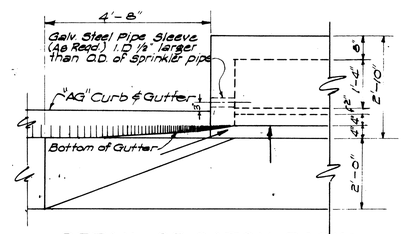

DETAIL OF CATCH BASIN WITH "AG" CURB & GUTTER

SCALE: 1/2" = 1'-0"

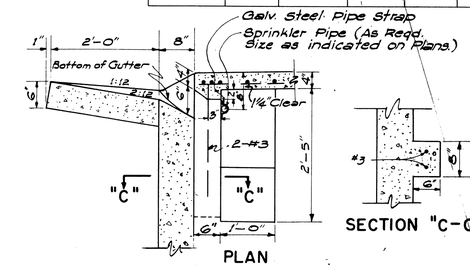

PLAN

SECTION "C-C"

THROAT DETAIL FOR "EG" CURB & GUTTER

SCALE: 3/4" = 1'-0"

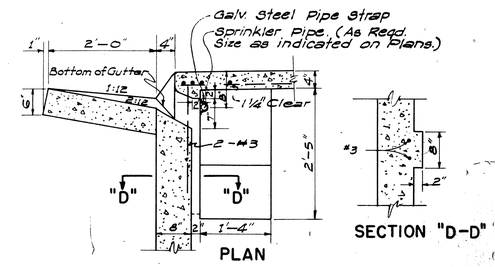

PLAN

SECTION "D-D"

THROAT DETAIL FOR "AG" CURB & GUTTER

SCALE: 3/4" = 1'-0"

GENERAL NOTES

1. Quantities based on d' = 5.75' and D' = 30".
2. Quantities do not include concrete for Gutter Apron.
3. The Contractor shall install two 6" Cast Iron or Concrete Pipes as incidental to Class A Concrete for Construction Drainage. The Engineer shall determine the exact location in the field.
4. Culvert shall leave C.B. from any position and any direction indicated by plans or ordered by the Engineer. Culvert may both enter and leave C.B. so that C.B. will also act as Manhole.
5. The Contractor shall install Galvanized Steel Pipe Sleeves and Straps as incidental to Sprinkler System.
6. The type of curb and/or gutter (Type 1, 2, 3, etc.) shall conform to the type specified on the roadway plans.
7. Manhole Rungs (12" o.c.) are required when "H" is greater than 4 feet 6 inches. Only one rung (16 inches from the bottom) is required if "H" is 4 feet 6 inches or less. Type "B" Cast Iron Frame and Cover and Manhole Rungs may be placed at any location as ordered by the Engineer.

ESTIMATED QUANTITIES

Type	Class A Conc	Struct. Exc.	Reinf Steel	Gutter Length
"A"	7.5 c.y.	24.7 c.y.	145 lb.	30'-0"
"B"	6.0 c.y.	21.5 c.y.	108 lb.	23'-4"
"C"	6.0 c.y.	21.5 c.y.	108 lb.	23'-4"
"D"	4.9 c.y.	16.5 c.y.	77 lb.	16'-8"

NO.	REVISION	APPROVED BY	DATE
1	Spacing on Manhole Rungs to conform to OSHA.	H.T.	1-21-75

APPROVAL RECOMMENDED: G. Yakano — 12-17-69
HYDRAULIC DESIGN ENGINEER — DATE

APPROVED: Shelton G. Galan — 12-17-69
ASSISTANT CHIEF, ENGINEERING — DATE

STATE OF HAWAII
DEPARTMENT OF TRANSPORTATION
HIGHWAYS DIVISION
STANDARD DETAILS

CATCH BASINS

Scale: As Noted — Date: July, 1969

SHEET Nº 3 OF 10 SHEETS — DH 1

58

ORIGINAL PLAN — NOTE BOOK No. — SURVEY PLOTTED BY — DESIGNED BY C.Y.M. — DRAWN BY — TRACED BY — QUANTITIES BY — CHECKED BY — DATE

FED. ROAD DIST. NO.	STATE	FED. AID PROJ. NO.	FISCAL YEAR	SHEET NO.	TOTAL SHEETS
HAWAII	HAW.	TQ-F-018-1(18)	1978	C.0.58 S-1	266

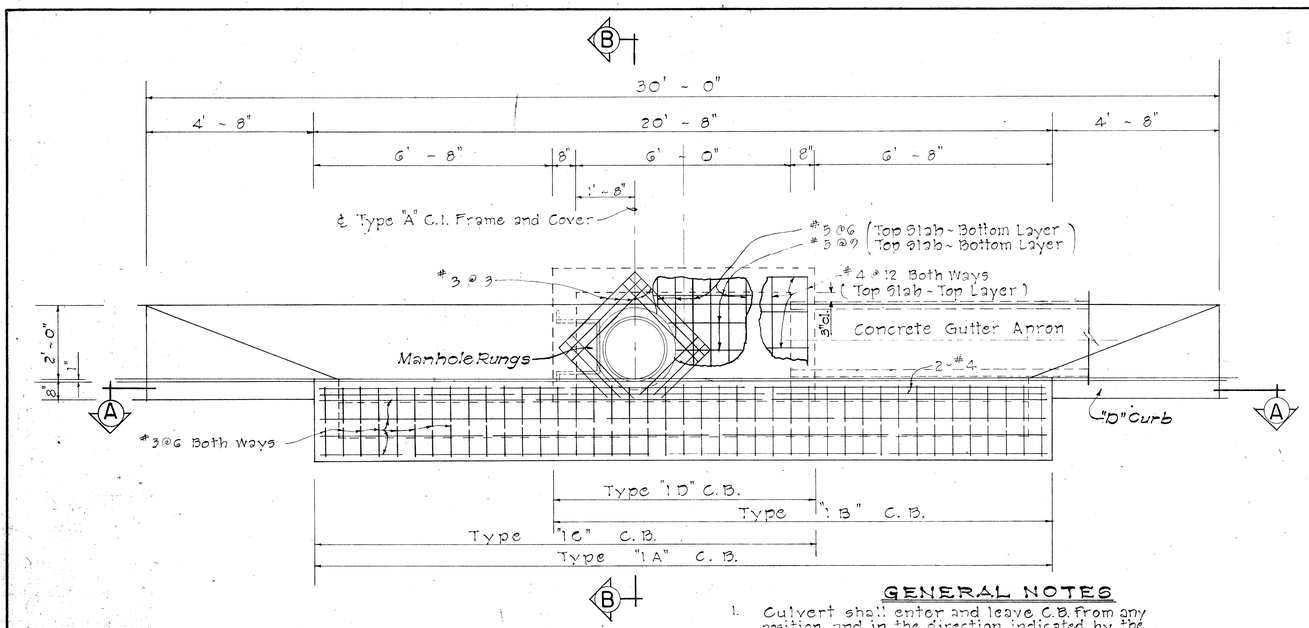

PLAN

Scale: 1/2" = 1' - 0"

GENERAL NOTES

1. Culvert shall enter and leave C.B. from any position and in the direction indicated by the plans or ordered by the Engineer.
2. D' shall be the maximum outside dimension of the culvert at the C.B. wall.
3. The type of curb and/or gutter (Type 1, 2, 3, etc.) shall conform to the type specified on the roadway plans.
4. Manhole Rungs (12" o.c.) are required when "H" is greater than 4 feet 6 inches. Only one rung (16 inches from the bottom) is required if "H" is 4 feet 6 inches or less. Type "A" C.I. Frame & Cover and Manhole Rungs may be placed at any location as ordered by the Engineer.

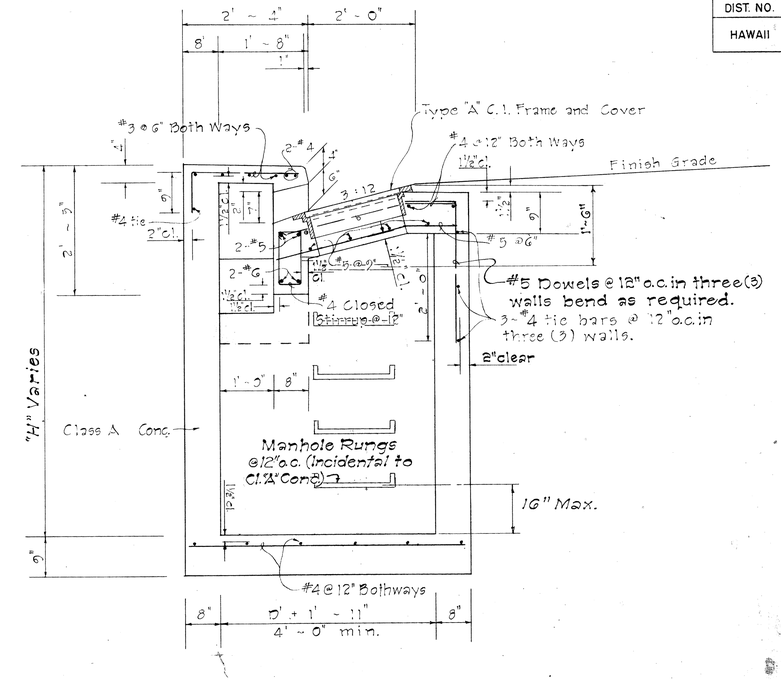

SECTION "B-B"

Scale: 3/4" = 1' - 0"

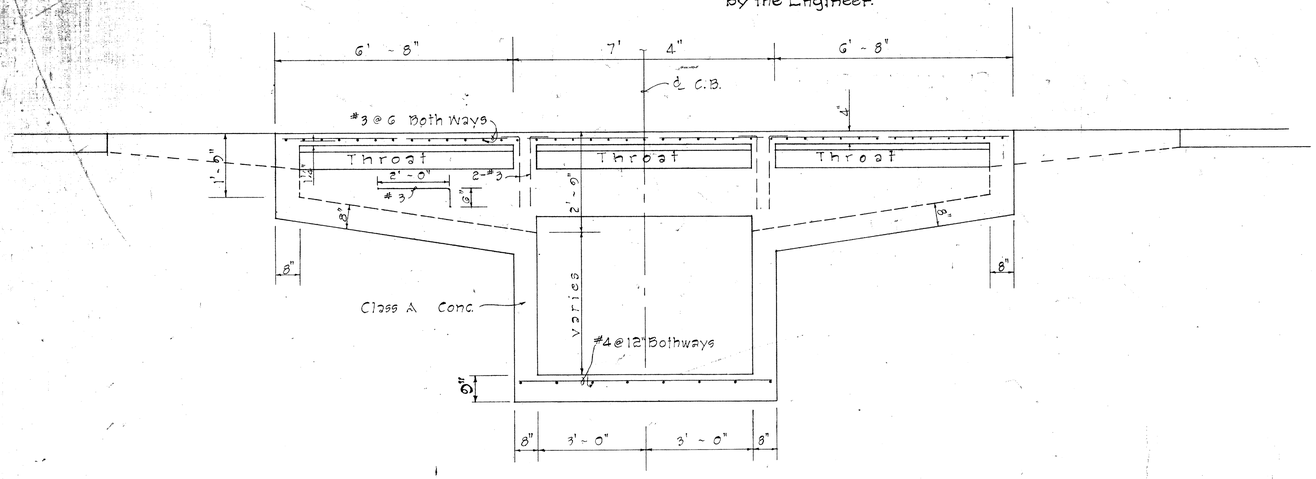

SECTION "A-A"

Scale: 1/2" = 1' - 0"

DETAILS OF TYPE "IA", "IB", "IC" AND "ID" CATCH BASIN

NO.	REVISION	APPROVED BY	DATE
1	Spacing on Manhole Rungs to conform to OSHA.	H.T.	1-21-75

APPROVAL RECOMMENDED:
G. Takano
HYDRAULIC DESIGN ENGINEER — DATE 12-17-69

APPROVED:
ASSISTANT CHIEF, ENGINEERING — DATE 12-17-69

STATE OF HAWAII
DEPARTMENT OF TRANSPORTATION
HIGHWAYS DIVISION

STANDARD DETAILS

TYPE "IA", "IB", "IC", AND "ID" CATCH BASINS

Scale: As Noted — Date: July, 1969

SHEET No. 3A OF 10 SHEETS — DH 3

C.0.58 S-1

ORIGINAL PLAN	SURVEY PLOTTED BY	DATE
	DRAWN BY	"
	TRACED BY	"
NOTE BOOK	DESIGNED BY	"
	QUANTITIES BY	"
No.	CHECKED BY	"

FED. ROAD DIST. NO.	STATE	FED. AID. PROJECT	FISCAL YEAR	SHEET NO.	TOTAL SHEETS
HAWAII	HAWAII	TQ-F-078-(10)	1978	59	266

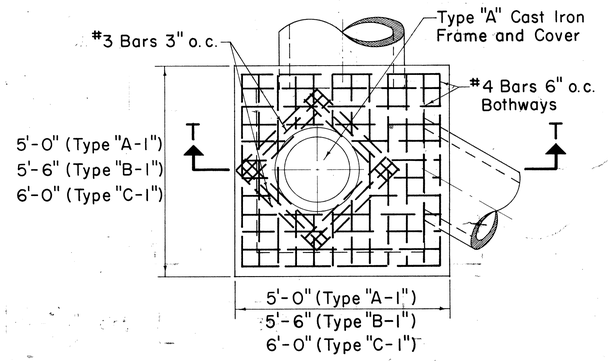

PLAN

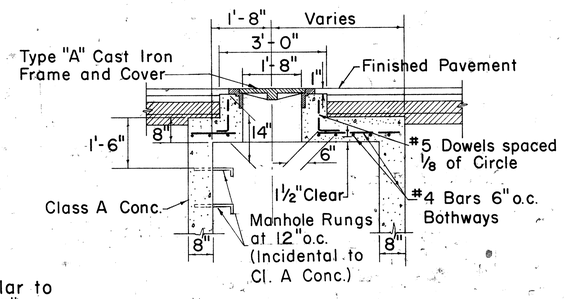

Note:
Bottom detail similar to Type "A", "B", & "C".

SECTION T-T

TYPE "A-1", "B-1", & "C-1" STORM DRAIN MANHOLE TOP DETAIL UNDER PAVEMENT

Scale: ½" = 1'-0"

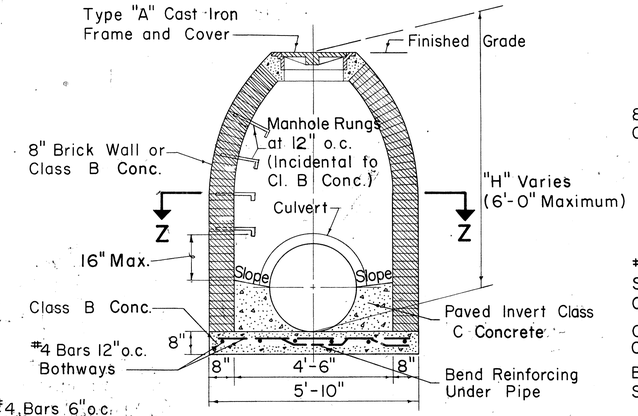

SECTION Y-Y

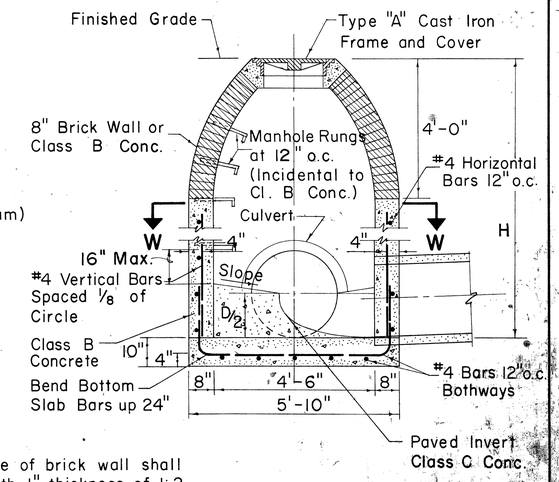

SECTION X-X

NOTE:

1. Exterior surface of brick wall shall be plastered with 1" thickness of 1:2 Cement Mortar.
2. Number, size and direction of culvert at manhole to be as shown on plans.
3. Paved invert not required at drop manholes.
4. All Class C Concrete to be incidental to Class B Concrete.

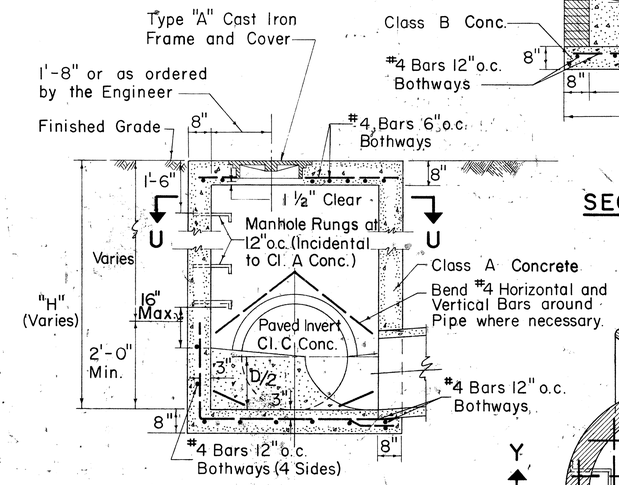

SECTION V-V

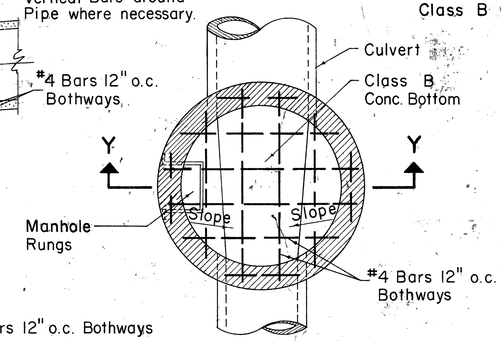

SECTION Z-Z

TYPE "D" STORM DRAIN MANHOLE

Scale: ½" = 1'-0"

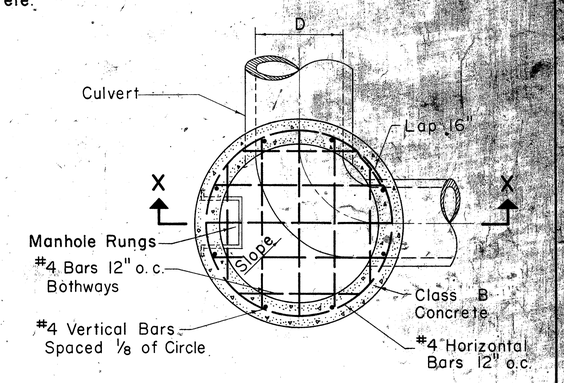

SECTION W-W

TYPE "E" STORM DRAIN MANHOLE

Scale: ½" = 1'-0"

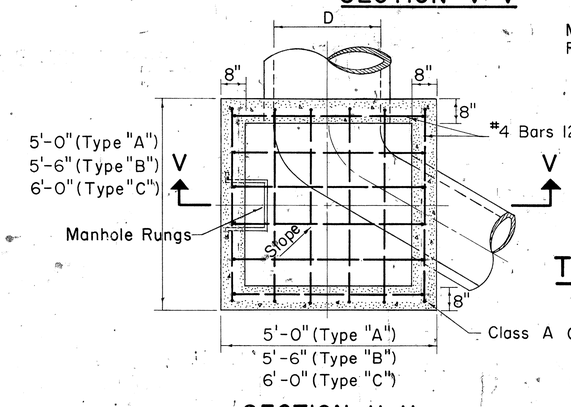

SECTION U-U

TYPE "A", "B", & "C" S.D.M.H.

Scale: ½" = 1'-0"

GENERAL NOTES

1. Culvert shall enter and leave S.D.M.H. from any position and in the direction indicated by the plans or ordered by the Engineer.
2. Manhole Rungs (12" o.c.) are required when "H" is greater than 4'-6". Only one rung (16" from the bottom) is required if "H" is 4'-6" or less. Type "A" C.I. Frame and Cover and Manhole Rungs may be placed at any location as ordered by the Engineer.

APPROVAL RECOMMENDED
G. Yalano — 12-17-69
HYDRAULIC DESIGN ENGINEER — DATE

APPROVED:
[illegible] — 12-17-69
ASS'T. CHIEF ENGINEERING — DATE

NO.	REVISION	APPROVED BY	DATE
1	Spacing on Manhole Rungs to conform to OSHA.	H.T.	1-21-75

STATE OF HAWAII
DEPARTMENT OF TRANSPORTATION
HIGHWAYS DIVISION

STANDARD DETAILS
STORM DRAIN MANHOLES

Scales: As Noted — Date: July 1, 1969

SHEET NO. 4 OF 18 SHEETS DH 5

FED. ROAD DIST. NO.	STATE	FED. AID PROJ. NO.	FISCAL YEAR	SHEET NO.	TOTAL SHEETS
HAWAII	HAW.	TQ-F-078-1(18)	1978	60	266

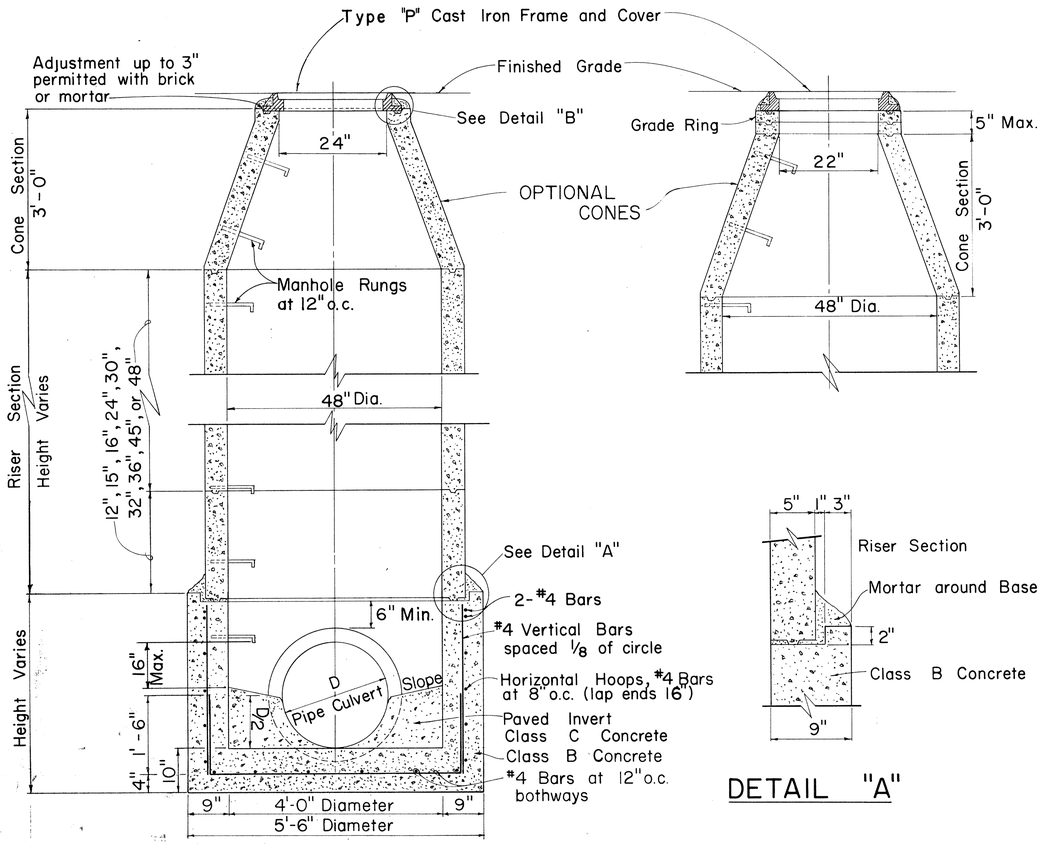

TYPICAL SECTIONS PRECAST CONCRETE MANHOLE

Not to Scale

DETAIL "A"

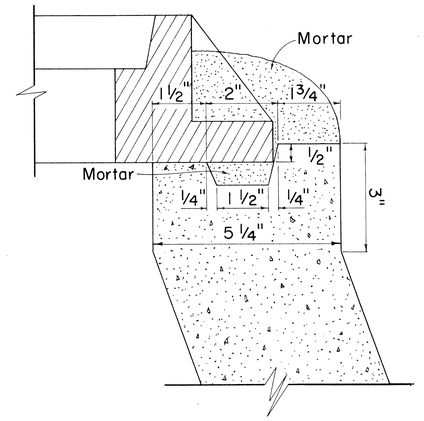

DETAIL "B"

Not to Scale

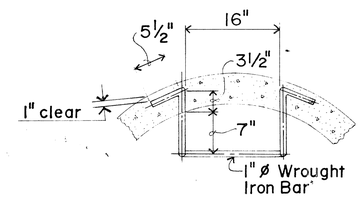

PLAN VIEW

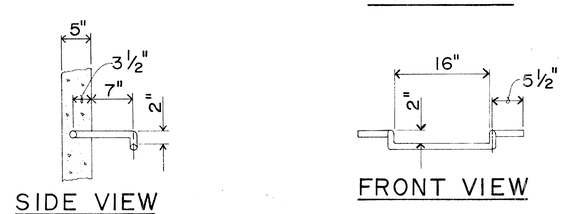

DETAIL OF MANHOLE RUNGS

Not to Scale

GENERAL NOTES

1. Manhole Rungs to be placed at 12" o.c. (Manhole Rungs incidental to Class B Concrete)
2. Select appropriate combination of risers and grade rings for required height.
3. All joints to be grouted as set.
4. The precast sections shall be constructed in accordance with the details shown on the plans and to the requirements of ASTM C 478
5. Manufacturers may submit to the Engineer for approval, prior to manufacturing, designs other than those shown on this sheet.
6. Reinforcing steel for precast sections shall be placed in accordance with the requirements of ASTM C 478
7. All Class C Concrete to be incidental to Class B Concrete.

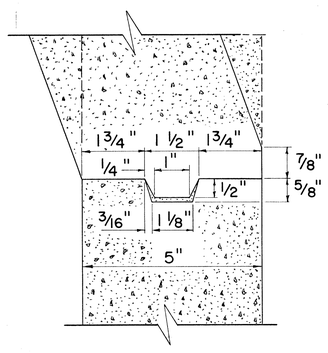

DETAIL FOR RISER JOINTS

Not to Scale

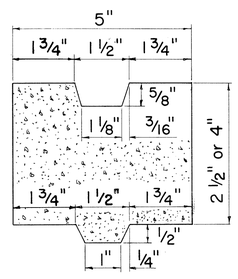

GRADE RING DETAIL

Not to Scale

ORIGINAL PLAN	SURVEY PLOTTED BY	DATE
	DRAWN BY	"
	TRACED BY	"
NOTE BOOK	DESIGNED BY	"
	QUANTITIES BY	"
No.	CHECKED BY	"

APPROVAL RECOMMENDED:

G. Takano — HYDRAULIC DESIGN ENGINEER — 2-2-71 DATE

APPROVED:

[illegible] — ASSISTANT CHIEF, ENGINEERING — 2-25-71 DATE

NO.	REVISION	APPROVED BY	DATE
1	Spacing and details of Manhole Rungs to conform to OSHA	H.T.	2/28/75

STATE OF HAWAII
DEPARTMENT OF TRANSPORTATION
HIGHWAYS DIVISION

STANDARD DETAILS

PRECAST CONCRETE STORM DRAIN MANHOLES

Not to Scale — Date: Nov., 1970

SHEET No. 5 OF 10 SHEETS DH 5A

FED. ROAD DIST. NO.	STATE	FED. AID PROJ. NO.	FISCAL YEAR	SHEET NO.	TOTAL SHEETS
HAWAII	HAW.	TQ-F-078-1(8)	1978	61	266

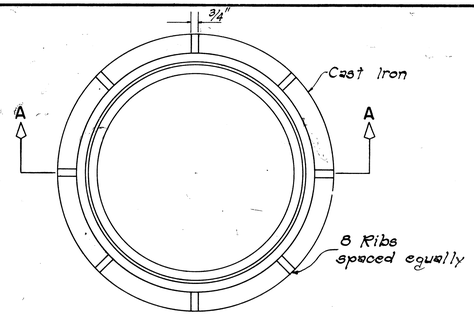

PLAN

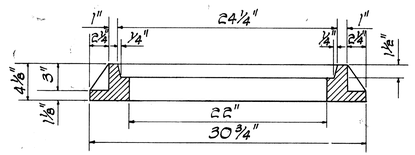

SECTION A-A

PLAN

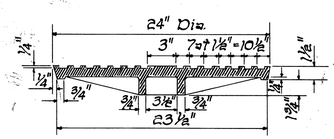

SECTION A-A

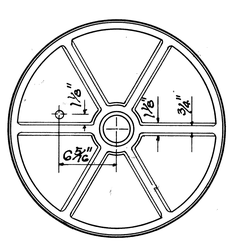

BOTTOM VIEW OF COVER

DETAILS OF TYPE "P"

CAST IRON FRAME AND COVER

SCALE: 1-1/2" = 1'-0"

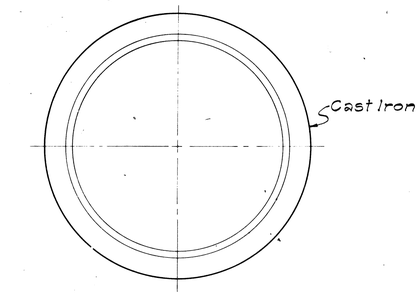

PLAN OF RIM

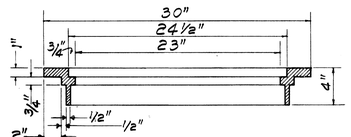

SECTION OF RIM

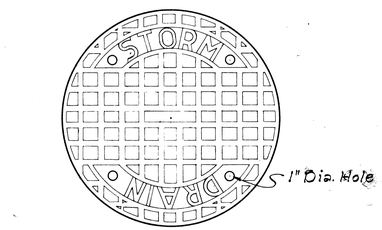

TOP VIEW OF COVER

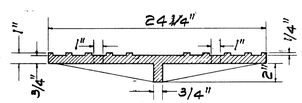

SECTION

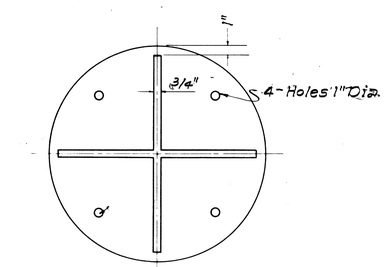

BOTTOM VIEW OF COVER

DETAILS OF TYPE "B"

CAST IRON FRAME AND COVER

SCALE: 1-1/2" = 1'-0"

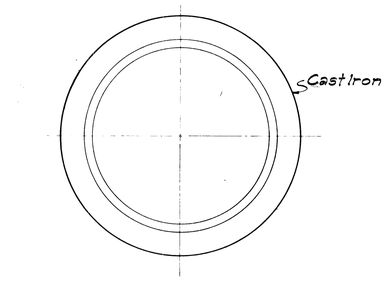

PLAN OF RIM

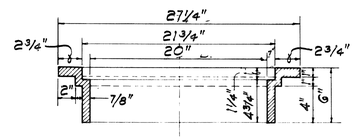

SECTION OF RIM

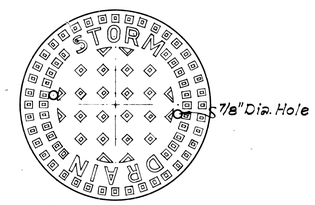

TOP VIEW OF COVER

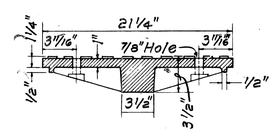

SECTION

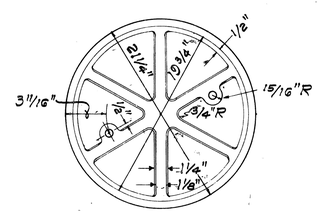

BOTTOM VIEW OF COVER

DETAILS OF TYPE "A"

CAST IRON FRAME AND COVER

SCALE: 1-1/2" = 1'-0"

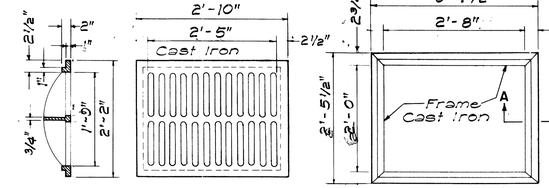

SECTION

TOP VIEW

TOP VIEW

TYPE C C.I. FRAME AND GRATE

SCALE: 3/4" = 1'-0"

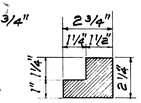

SECTION "A-A"

SCALE 3" = 1'-0"

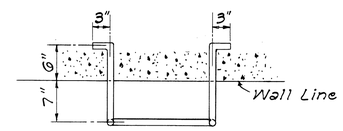

PLAN

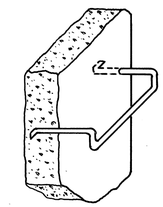

PICTORIAL VIEW

NOT TO SCALE

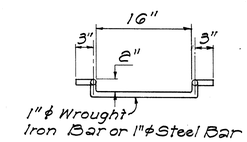

FRONT VIEW

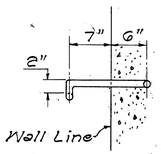

SIDE VIEW

DETAILS OF MANHOLE RUNG

SCALE: 1" = 1'-0"

APPROVAL RECOMMENDED:

HYDRAULIC DESIGN ENGINEER — DATE: 12-17-69

APPROVED:

ASSISTANT CHIEF, ENGINEERING — DATE: 12-17-69

NO.	REVISION	APPROVED BY	DATE
1.	Detail of Type "P" Cast Iron Frame and Cover	H.T.	1-6-71
2	Details of Manhole Rungs to conform to OSHA.	H.T.	1-21-75
3	Option for Manhole Rungs	H.T.	1-13-76

STATE OF HAWAII
DEPARTMENT OF TRANSPORTATION
HIGHWAYS DIVISION

STANDARD DETAILS

CATCH BASIN AND MANHOLE CASTINGS

Scale: As Noted — Date: July, 1969

SHEET Nº 6 OF 10 SHEETS DH 6

ORIGINAL PLAN	SURVEY PLOTTED BY	DATE
	DESIGNED BY	"
	DRAWN BY	"
NOTE BOOK	TRACED BY Calistro	"
	QUANTITIES BY	"
No.	CHECKED BY	"

61

FED. ROAD DIST. NO.	STATE	FED. AID PROJ. NO.	FISCAL YEAR	SHEET NO.	TOTAL SHEETS
HAWAII	HAW.	TQ-F-078-1(18)	1978	62	266

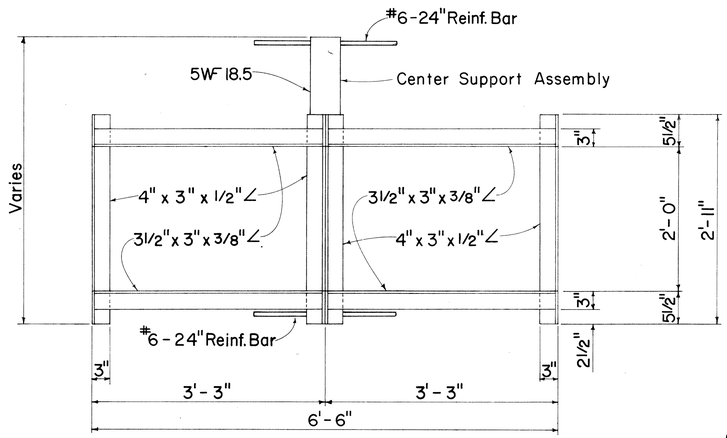

PLAN
(Two or More Grates)

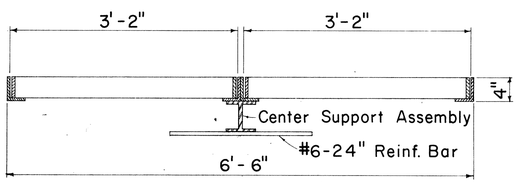

LONGITUDINAL SECTION
(Thru Frame & Grate)

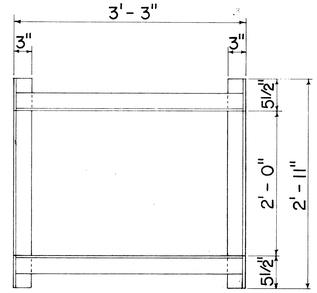

PLAN
(Single Grate)

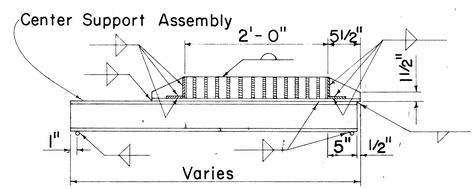

CROSS SECTION
(Thru Frame & Grate)

FRAME DETAILS
Scale: 1" = 1'-0"

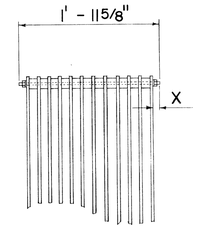

BOLTED END BLOCK
Scale: 1" = 1'-0"

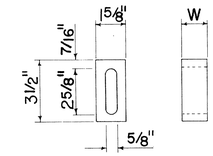

BAR SPACER
Scale: 3" = 1'-0"

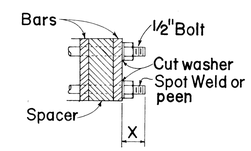

BOLTING DETAIL
Scale: 3" = 1'-0"

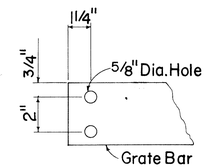

END OF BAR
Scale: 3" = 1'-0"

ALTERNATIVE BOLTED GRATE

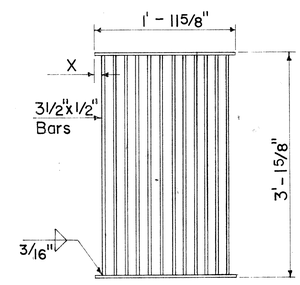

PLAN

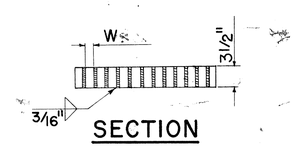

SECTION

ALTERNATIVE WELDED GRATE
Scale: 1" = 1'-0"

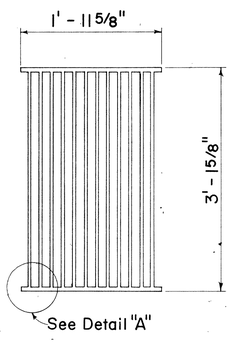

PLAN
Scale: 1" = 1'-0"

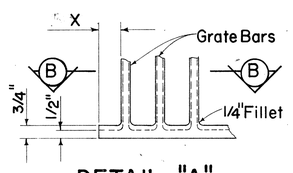

DETAIL "A"
Scale: 3" = 1'-0"

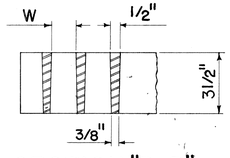

SECTION "B-B"
Scale: 3" = 1'-0"

ALTERNATIVE CAST MALLEABLE IRON OR CAST STEEL GRATE

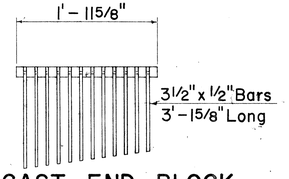

CAST END BLOCK
Scale: 1" = 1'-0"

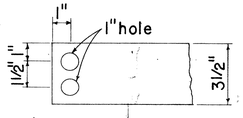

END OF BAR
Scale: 3" = 1'-0"

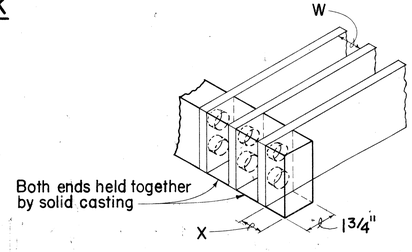

ALTERNATIVE CAST MALLEABLE IRON OR CAST STEEL END BLOCK GRATE

GENERAL NOTES

1. Contractor has the option of using cast malleable iron, cast steel, welded, bolted, cast malleable iron end block or cast steel end block grate.
2. Grates and Frames shall be hot dip galvanized after fabrication, see specifications.
3. All welds 3/8" unless otherwise noted.
4. Center support assembly shall be used when two or more grates are specified. Incidental to Types A-9 or A-12 Frame and Grates.
5. Refer to "Grate Bar Spacing Table" for Types A-9 and A-12 Grate dimensions.
6. The various materials shall conform to the specifications of ASTM as listed in the following tabulation and the Std. Specifications.

Material	ASTM Designation
Structural Steel	A283, Grade D
Cast Steel	A27, Grade 65-35
Malleable Iron Casting	A47, Gr. No. 35018

GRATE BAR SPACING TABLE

TYPE	NO. BARS	CLEAR BAR SPACING - W	X
A-9	9	2"	1 9/16"
A-12	12	1 3/8"	1 1/4"

NOTE:

1. Type A-9 – Use in locations off the roadbed on all types of highways.
2. Type A-12 – Use within the roadbed on all types of highways.

APPROVAL RECOMMENDED:
T. Takaoka — 12-17-69
HYDRAULIC DESIGN ENGINEER — DATE

APPROVED:
[signature] — 12-17-69
ASSISTANT CHIEF, ENGINEERING — DATE

NO.	REVISION	APPROVED BY	DATE

Scale: " = 1'-0"

STATE OF HAWAII
DEPARTMENT OF TRANSPORTATION
HIGHWAYS DIVISION

STANDARD DETAILS

TYPE A-9 AND A-12 FRAMES AND GRATES

Scales: As Noted — Date: Aug. 1968

SHEET No. 7 OF 10 SHEETS — DH 7

ORIGINAL PLAN		DATE
	SURVEY PLOTTED BY	7/68
	DRAWN BY L.C.M.	" 8/68
	TRACED BY L.C.M.	" 7/68
NOTE BOOK	DESIGNED BY H.K.M.	
	QUANTITIES BY	
No.	CHECKED BY H.K.M.	" 8/68

FED. ROAD DIST. NO.	STATE	FED. AID PROJ. NO.	FISCAL YEAR	SHEET NO.	TOTAL SHEETS
HAWAII	HAW.	TQ-F-078-1(18)	1978	63	266

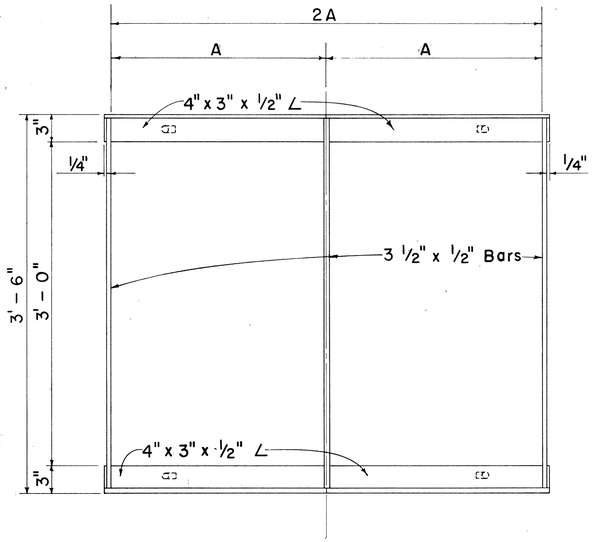

PLAN
Scale: 1 1/2" = 1'-0"

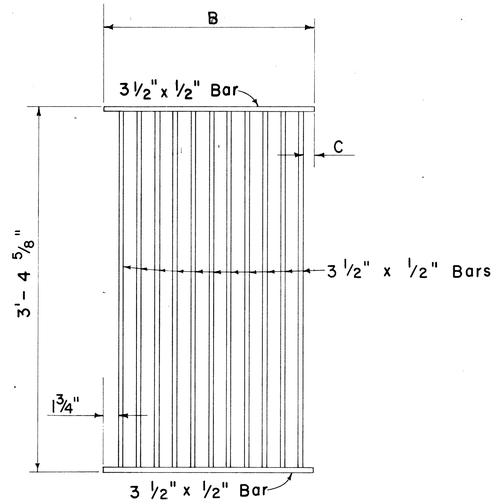

PLAN
Scale: 1 1/2" = 1'-0"

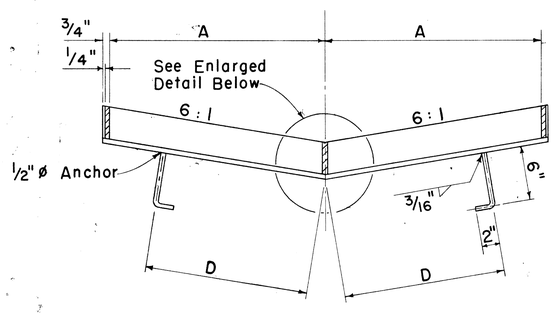

SECTION
Scale: 1 1/2" = 1'-0"

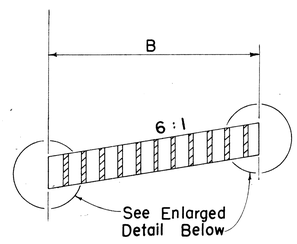

SECTION
Scale: 1 1/2" = 1'-0"

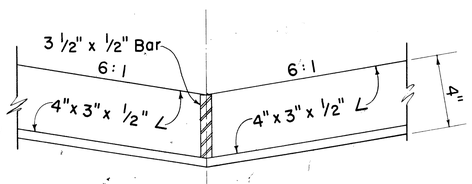

FRAME
Scale: 3" = 1'-0"

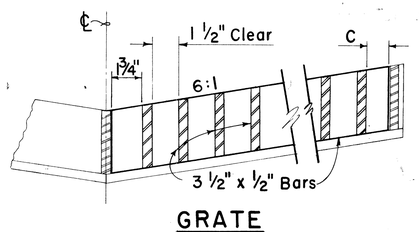

GRATE
Scale: 3" = 1'-0"

DETAILS OF TYPE 61614 OR 61616 STEEL FRAME AND GRATE

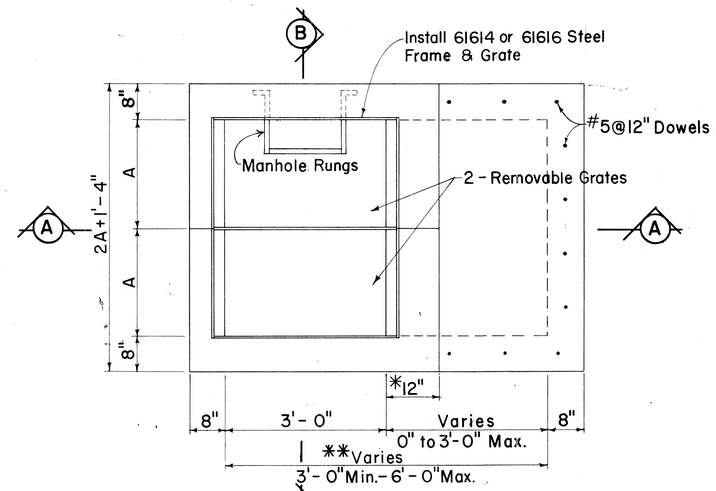

PLAN

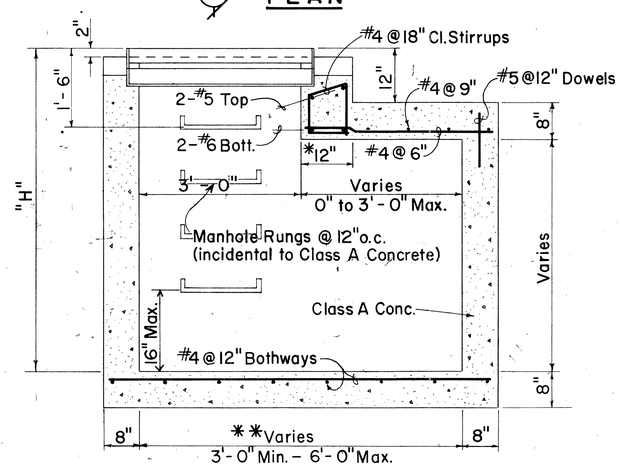

SECTION A - A

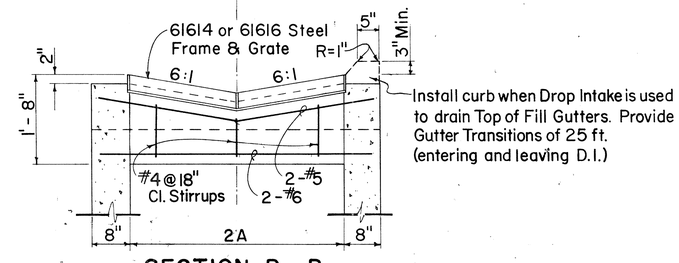

SECTION B - B

DETAILS OF 61614 OR 61616 DROP INTAKE

Scale: 3/4" = 1'- 0"

*For Minimum size box of 3'-0", use 8" and eliminate reinforcing steel shown in the top portion.

**For Culverts larger than 30", the minimum dimension shall be D'.

GENERAL NOTES

1. Grates and Frames shall be hot dip galvanized after fabrication, see specifications.
2. All welds 3/8" unless otherwise noted.
3. Refer to "Spacing Table" for Types 61614 & 61616 Drop Intake and Frame & Grates dimensions.
4. The Frame & Grate materials shall conform to the specifications of ASTM Designation Structural Steel A283, Grade D and the Standard Specifications.
5. Culvert shall leave Drop Intake from any position and any direction indicated by plans or ordered by the Engineer. Culverts may both enter and leave Drop Intake so that Drop Intake will act as manhole.
6. Manhole Rungs (12"o.c.) are required when "H" is greater than 4 feet 6 inches. Only one rung (16 inches from the bottom) is required if "H" is 4 feet 6 inches or less. Manhole Rungs may be placed at any location as ordered by the Engineer.

SPACING TABLE

TYPE	NO. BARS	A	B	C	D
61614	11	2'- 0"	1'- 11 1/2"	1 1/4"	1'- 6"
61616	17	3'- 0"	2'- 11 3/8"	1 1/8"	2'- 0"

NO.	REVISION	APPROVED BY	DATE
1	Curb for Top of Fill Gutters	H.T.	6-5-71
2	Spacing on manhole rungs to conform to OSHA.	H.T.	1-21-75

APPROVAL RECOMMENDED:
V. Takano — 12-17-69
HYDRAULIC DESIGN ENGINEER — DATE

APPROVED:
Charles E. Dalton — 12-17-69
ASSISTANT CHIEF, ENGINEERING — DATE

STATE OF HAWAII
DEPARTMENT OF TRANSPORTATION
HIGHWAYS DIVISION
STANDARD DETAILS
TYPE 61614 & 61616
GRATED DROP INTAKES

Scales: As Noted — Date: Feb. 1969

SHEET No. 8 OF 10 SHEETS — DH 8

ORIGINAL PLAN	SURVEY PLOTTED BY	DATE
	DRAWN BY	"
	TRACED BY	"
	DESIGNED BY	"
NOTE BOOK	QUANTITIES BY	"
No.	CHECKED BY	"

FED. ROAD DIST. NO.	STATE	FED. AID PROJ. NO.	FISCAL YEAR	SHEET NO.	TOTAL SHEETS
HAWAII	HAW.	TQ-F-078(10)	1978	64	266

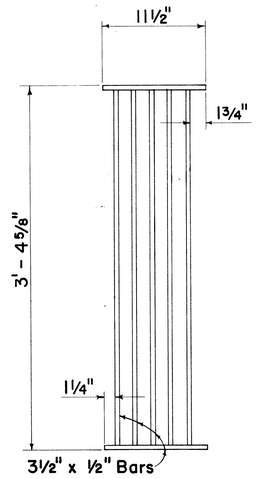

PLAN
Scale: 1½" = 1' - 0"

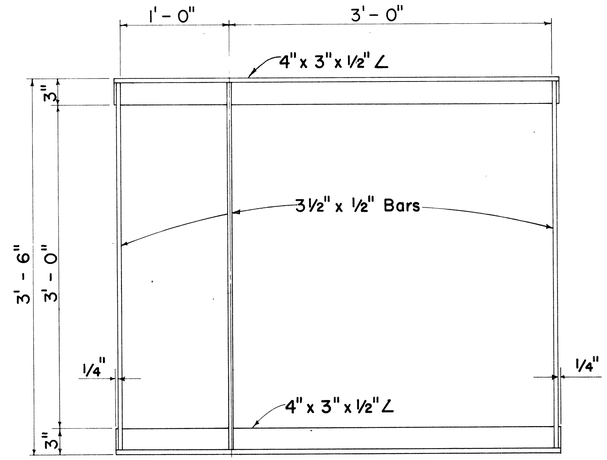

PLAN
Scale: 1½" = 1' - 0"

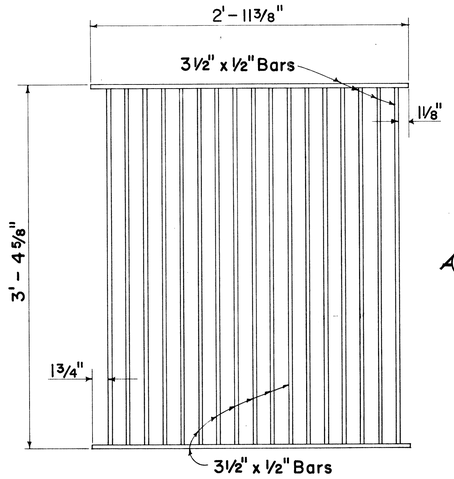

PLAN
Scale: 1½" = 1' - 0"

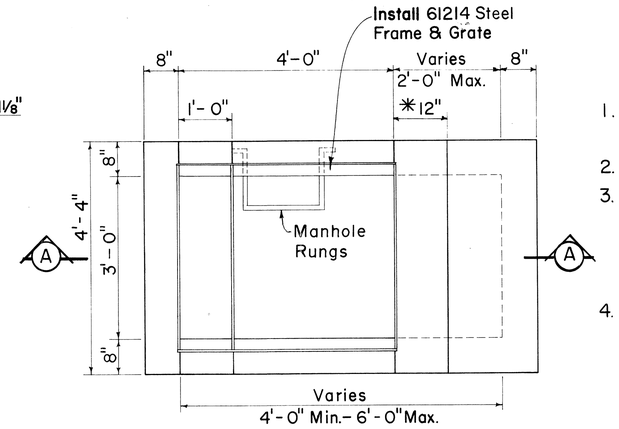

PLAN

GENERAL NOTES

1. Grates and Frames shall be hot dip galvanized after fabrication, see specifications.
2. All welds 3/8" unless otherwise noted.
3. The Frame & Grate materials shall conform to the specifications of ASTM Designation Structural Steel A283, Grade D and the Standard Specifications.
4. Culvert shall leave Drop Intake from any position and any direction indicated by plans or ordered by the Engineer. Culverts may both enter and leave Drop Intake so that Drop Intake will act as manhole.
5. Manhole Rungs (12" o.c.) are required when "H" is greater than 4 feet 6 inches. Only one rung (16 inches from the bottom) is required if "H" is 4 feet 6 inches or less. The Manhole Rungs may be placed at any location as ordered by the Engineer.

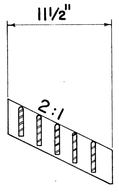

SECTION
Scale: 1½" = 1' - 0"

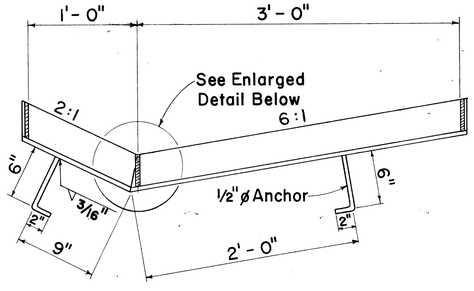

SECTION
Scale: 1½" = 1' - 0"

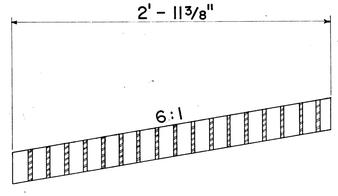

SECTION
Scale: 1½" = 1' - 0"

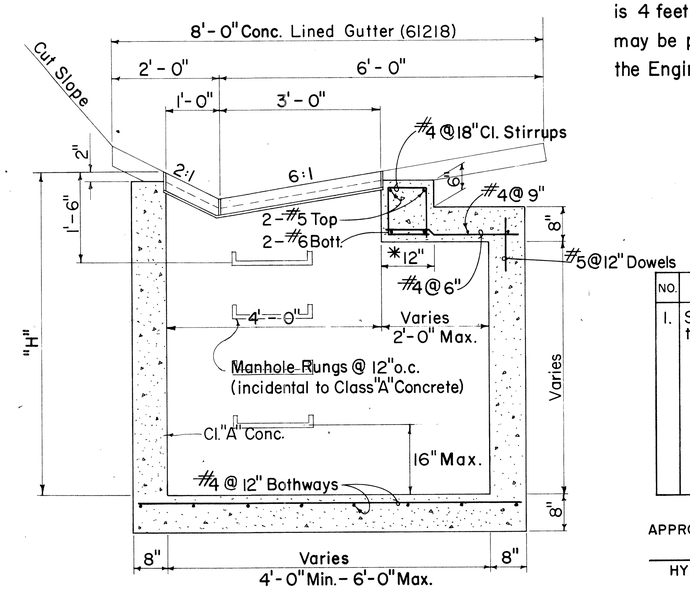

SECTION A - A

DETAIL OF 61214 DROP INTAKE
Scale: 3/4" = 1' - 0"

*For Minimum size box of 4'-0" only, use 8" and eliminate reinforcing steel shown in top portion.

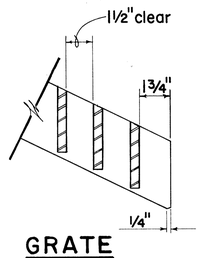

GRATE
Scale: 3" = 1' - 0"

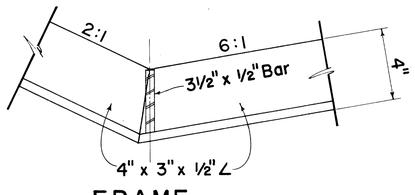

FRAME
Scale: 3" = 1' - 0"

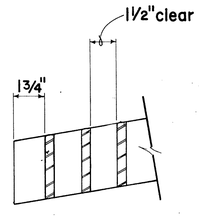

GRATE
Scale: 3" = 1' - 0"

DETAILS OF TYPE 61214 STEEL FRAME AND GRATES

NO.	REVISION	APPROVED BY	DATE
1.	Spacing on Manhole Rungs to conform to OSHA.	HT.	1-21-75

APPROVAL RECOMMENDED:
R. Takano — 12-17-69
HYDRAULIC DESIGN ENGINEER — DATE

APPROVED:
[illegible] — 12-17-69
ASSISTANT CHIEF, ENGINEERING — DATE

STATE OF HAWAII
DEPARTMENT OF TRANSPORTATION
HIGHWAYS DIVISION
STANDARD DETAILS
TYPE 61214
GRATED DROP INTAKE

Scales: As Noted — Date: July 1969

SHEET No. 9 OF 10 SHEETS — DH 9

ORIGINAL PLANS	SURVEY PLOTTED BY	DATE
	DRAWN BY	"
	TRACED BY	"
	DESIGNED BY	"
NOTE BOOK	QUANTITIES BY	"
No.	CHECKED BY	"

FED. ROAD DIST. NO.	STATE	FED. AID PROJ. NO.	FISCAL YEAR	SHEET NO.	TOTAL SHEETS
HAWAII	HAW.	TQ-F-078-1(18)	1978	65	266

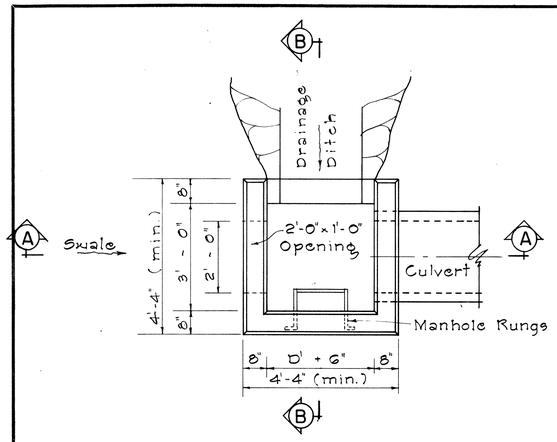

PLAN

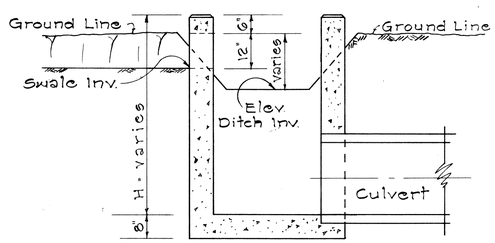

SECTION "A-A"

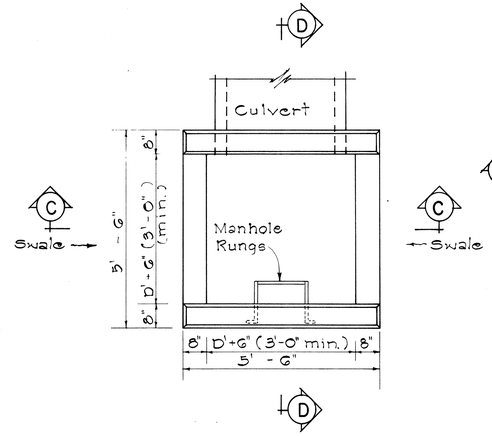

PLAN

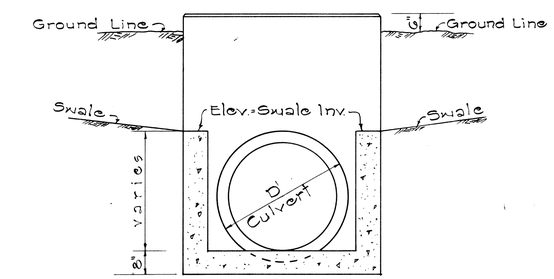

SECTION "C-C"

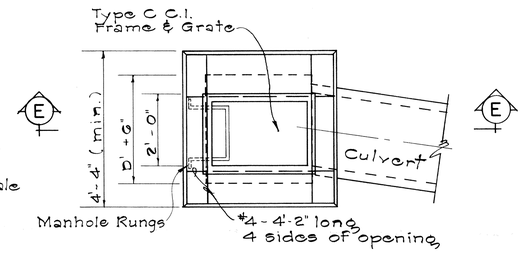

PLAN

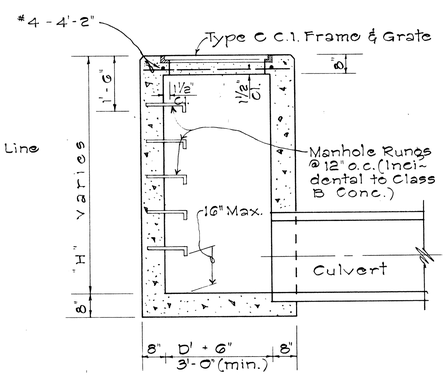

SECTION "E-E"

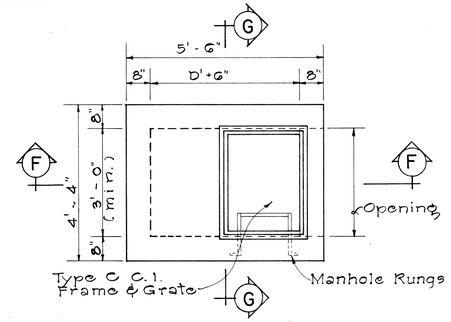

PLAN

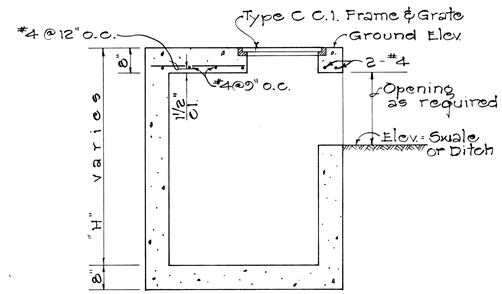

SECTION "F-F"

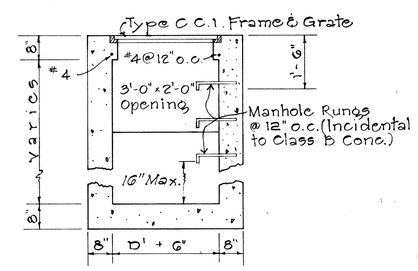

SECTION "G-G"

TYPE "C" GRATED CONCRETE DROP INTAKE

Scale: 1/2" = 1'-0"

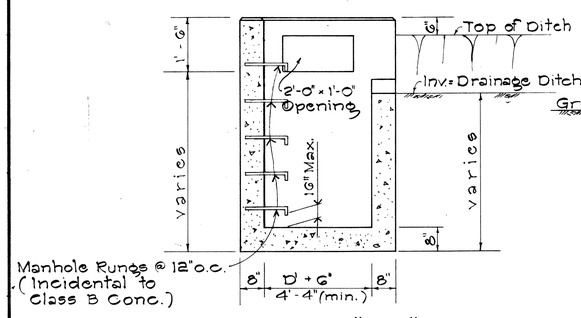

SECTION "B-B"

TYPE "A" CONCRETE DROP INTAKE

Scale: 1/2" = 1'-0"

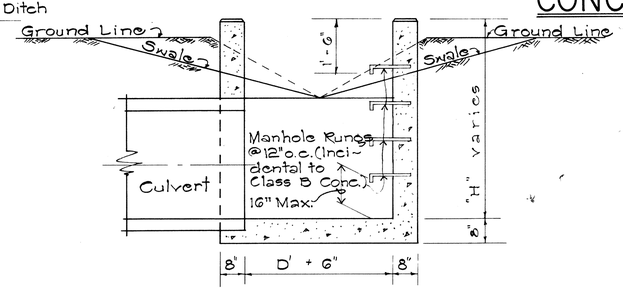

SECTION "D-D"

TYPE "B" CONCRETE DROP INTAKE

Scale: 1/2" = 1'-0"

TYPE "D" GRATED CONCRETE DROP INTAKE

Scale: 1/2" = 1'-0"

GENERAL NOTES

1. All concrete shall be Class "B" unless otherwise noted.
2. Exposed edges of all drainage structures shall be chamfered one inch.
3. Culvert shall enter and leave Drop Intake from any position and in the direction indicated by the plans or ordered by the Engineer.
4. Manhole Rungs (12" o.c.) are req'd. when "H" is greater than 4'-6". Only one rung (16 inches from the bottom) is required if "H" is 4'-6" or less. Manhole Rungs maybe placed at any location as ordered by the Engineer.

APPROVAL RECOMMENDED: G. Yakano — HYDRAULIC DESIGN ENGINEER — DATE 12-17-69

APPROVED: [signature] — ASSISTANT CHIEF, ENGINEERING — DATE 12-17-69

NO.	REVISION	APPROVED BY	DATE
1	Spacing on Manhole Rungs to conform to OSHA.	H.C.	1-21-75

STATE OF HAWAII
DEPARTMENT OF TRANSPORTATION
HIGHWAYS DIVISION
STANDARD DETAILS
TYPE "A", "B", "C", AND "D" CONCRETE DROP INTAKE

Scale: As Noted — Date: July, 1969

SHEET No. 10 OF 10 SHEETS DH19

ORIGINAL PLAN	SURVEY PLOTTED BY	DATE
	DRAWN BY	
	TRACED BY	
NOTE BOOK	DESIGNED BY	
No.	QUANTITIES BY	
	CHECKED BY	