| FED. ROAD DIST. NO. | STATE | FED. AID PROJ. NO. | FISCAL YEAR | SHEET NO. | TOTAL SHEETS |
|---|---|---|---|---|---|
| HAWAII | HAW. | I-H1-1(89):13 | 1971 | 182 | 362 |

# BRIDGE NOTES

a. DESIGN SPECIFICATIONS

"STANDARD SPECIFICATIONS FOR HIGHWAY BRIDGES," AASHO TENTH EDITION (1969) WITH SUBSEQUENT ADDITIONS AND MODIFICATIONS BY THE STATE OF HAWAII, DEPARTMENT OF TRANSPORTATION.

b. DESIGN LIVE LOAD

HS 20-44 OR INTERSTATE LOADING

c. DESIGN STRESSES

$f'c$ = 3000 PSI
$Fc$ = 1200 PSI
$n$ = 10
$fs$ = 20,000 PSI (TENSION)

SEE SHEETS 10S, 14S, 16S AND STANDARD PILE DRAWING FOR NOTES ON CONCRETE DESIGN STRESSES & TYPES OF PRESTRESSING STEEL FOR PRESTRESSED CONC. GIRDERS, C.I.P. CONC. BOX GIRDERS, & PRESTRESSED CONC. PILES.

d. MATERIALS

ALL REINFORCING STEEL TO BE ASTM DESIGNATION A615 GRADE 40. SEE NOTE "C" ABOVE REGARDING PRESTRESSING STEEL.

e. PILE CAPACITY

32 TON PILES. SEE NOTES ON SHEET 3S

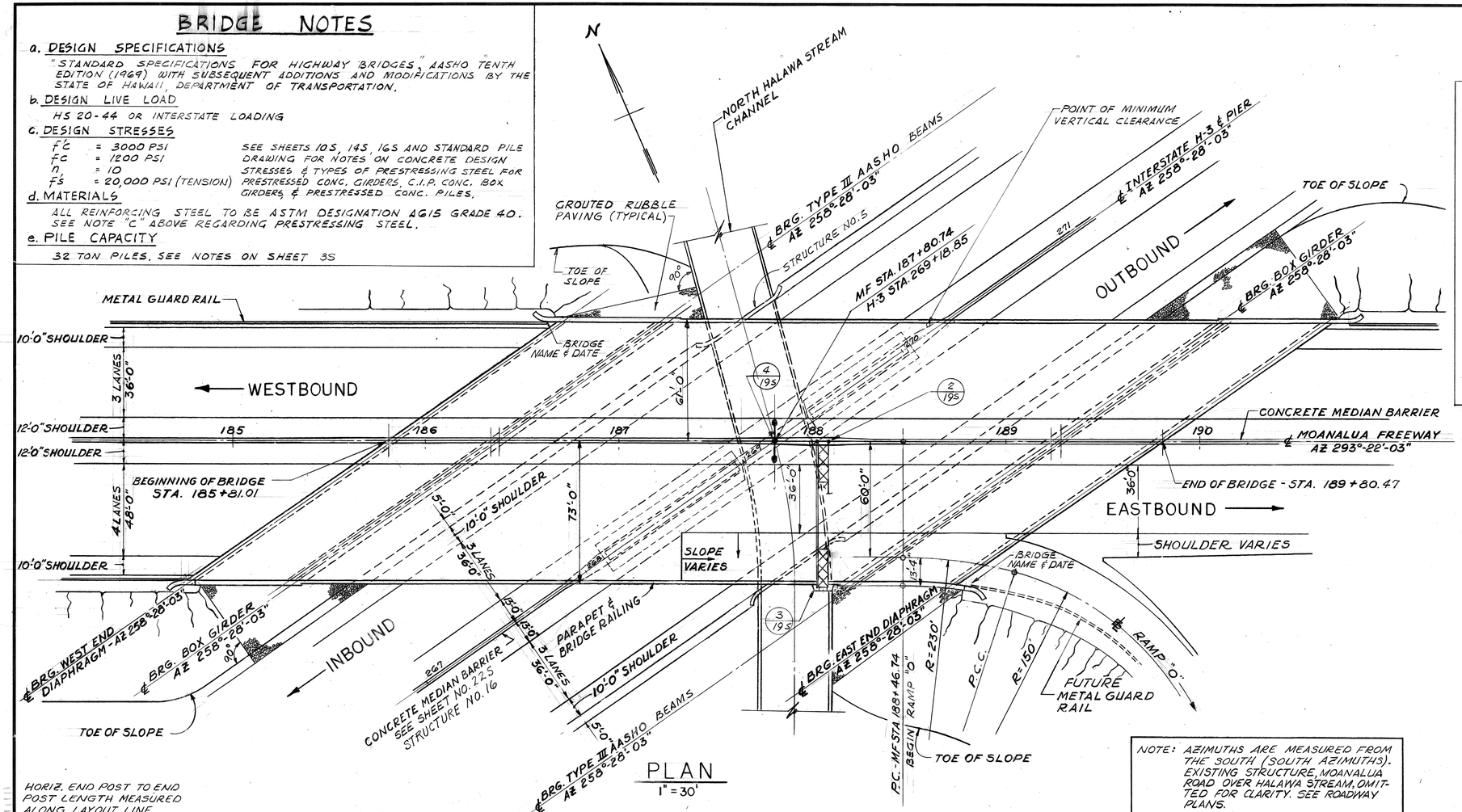


## PLAN
1" = 30'

NOTE: AZIMUTHS ARE MEASURED FROM THE SOUTH (SOUTH AZIMUTHS). EXISTING STRUCTURE, MOANALUA ROAD OVER HALAWA STREAM, OMITTED FOR CLARITY. SEE ROADWAY PLANS.

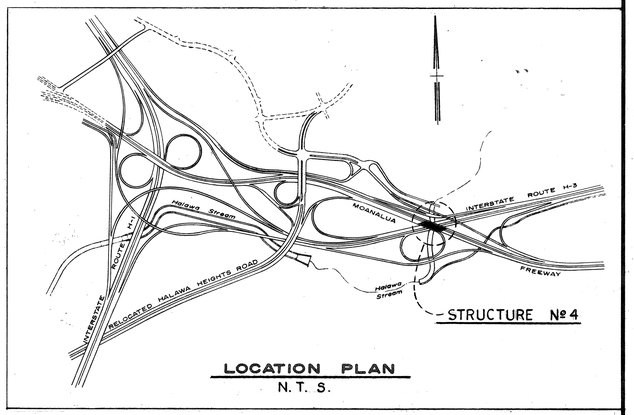


LOCATION PLAN
N. T. S.

## ESTIMATED QUANTITIES

| ITEM NO. | ITEM | UNIT | QUANTITY |
|---|---|---|---|
| 206.60 | STRUCTURE EXCAVATION FOR BRIDGES | C.Y. | 3010 |
| 503.071 | CONCRETE IN STRUCTURE No. 4 EXCEPT FOOTINGS & PRESTRESSED CAST-IN-PLACE STRUCTURES | L.S. | (1820 C.Y.) |
| 503.072 | CONCRETE IN STRUCTURE No. 4 FOOTINGS | L.S. | (1220 C.Y.) |
| 504.15 | TYPE III PRESTRESSED CONCRETE GIRDERS | L.S. | (1540 L.F.) |
| 504.50 | POST TENSIONING OPERATION FOR CAST-IN-PLACE STRUCTURES | L.S. | (212,400 LBS) |
| 504.60 | CONCRETE FOR PRESTRESSED CAST-IN-PLACE STRUCTURES | L.S. | (3210 C.Y.) |
| 505.001 | PILE LOAD TESTS | EA. | 4 |
| 505.040 | PRECAST, PRESTRESSED CONC. PILES, FURNISHED | L.F. | 42250 |
| 505.400 | PRECAST, PRESTRESSED CONC. PILES, DRIVEN | L.F. | 36300 |
| 507.10 | METAL BRIDGE RAILING-ONE RAIL ON PARAPET | L.F. | 786 |
| 507.70 | CONC. BRIDGE PARAPET, INCLUDING END POST | L.F. | 826 |
| 602.011 | REINFORCING STEEL IN STRUCTURE № 4. | L.S. | (1091,000 LBS) |
| 606.415 | GUARD RAIL, TYPE 4F | L.F. | 405 |
| 612.01 | GROUTED RUBBLE PAVING | C.Y. | 460 C.Y. |
| 505.700 | DRILLED HOLES FOR STRUCTURE NO. 4 | L.F. | 1900 |
| 505.800 | DRIVING TEST PILES FOR STRUCTURE NO. 4 | L.F. | 2050 |
| 506.03 | TFE STRUCTURAL BEARING EXPANSION PAD ASSEMBLAGE | L.S. | (36 UNITS) |

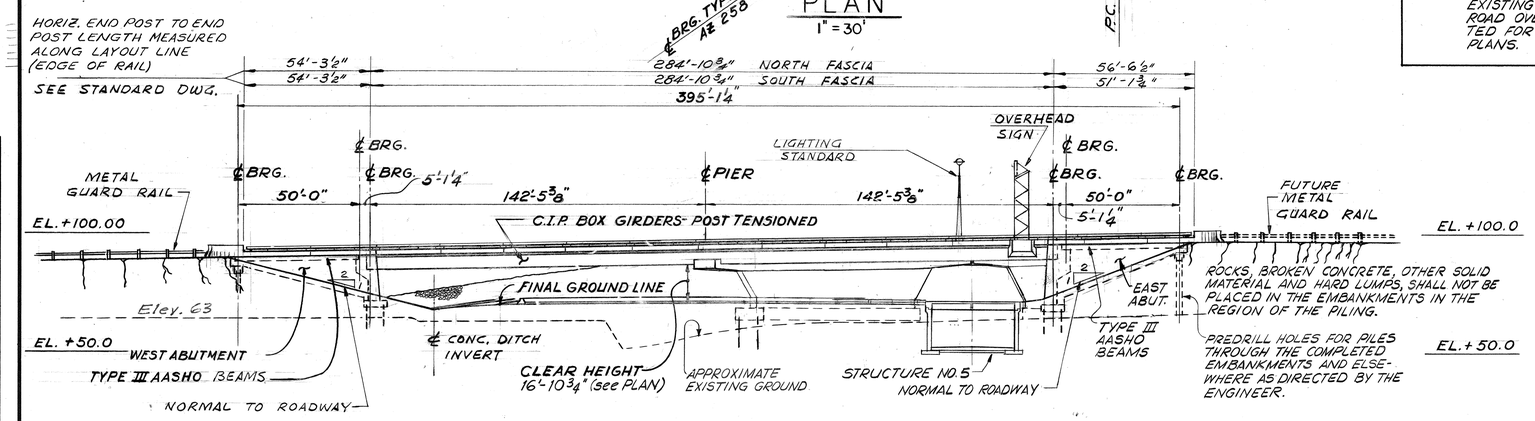


NOTE

DIMENSIONS ON ELEVATION ARE MEASURED PARALLEL TO ℄ MOANALUA FREEWAY UNLESS OTHERWISE NOTED.

## ELEVATION
1" = 30'

| ORIGINAL PLAN | SURVEY PLOTTED BY | DATE |
|---|---|---|
| | DRAWN BY | |
| | TRACED BY | 1/18/70 |
| NOTE BOOK | DESIGNED BY | |
| No. | QUANTITIES BY | |
| | CHECKED BY | |

THIS WORK WAS PREPARED BY ME OR UNDER MY SUPERVISION.
Wm. J. Armento

WILLIAM J. ARMENTO REGISTERED PROFESSIONAL ENGINEER No. 1943 HAWAII, U.S.A.

STATE OF HAWAII
DEPARTMENT OF TRANSPORTATION
HIGHWAYS DIVISION

HALAWA INTERCHANGE
STRUCTURE NO. 4

MOANALUA FREEWAY OVER H-3

GENERAL PLAN

PROJ. No. I-H1-1(89):13 DATE: MAY 1971

SHEET No. 1S OF 19S SHEETS

182

| FED. ROAD DIST. NO. | STATE | FED. AID PROJ. NO. | FISCAL YEAR | SHEET NO. | TOTAL SHEETS |
|---|---|---|---|---|---|
| HAWAII | HAW. | I-H1-1(89):13 | 1971 | 183 | 362 |

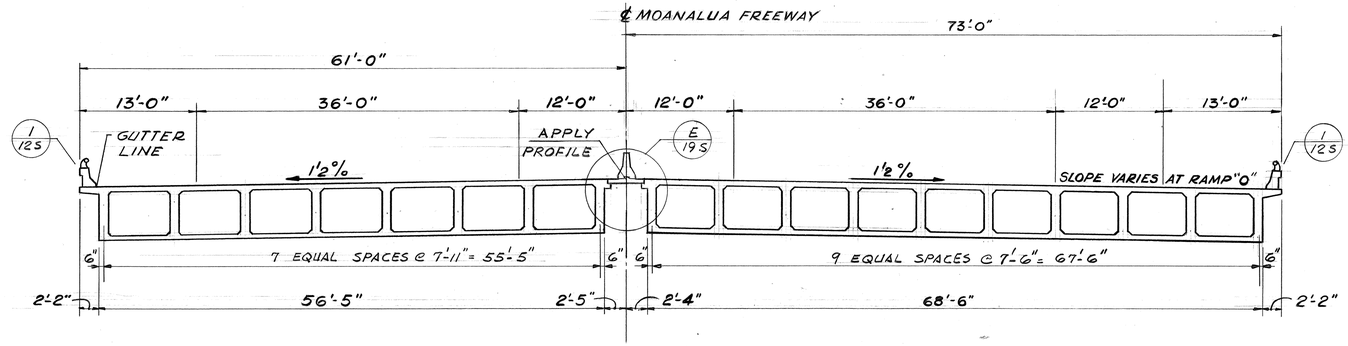


## TYPICAL CROSS SECTION-BOX GIRDERS

SCALE: 1/8"=1'-0"

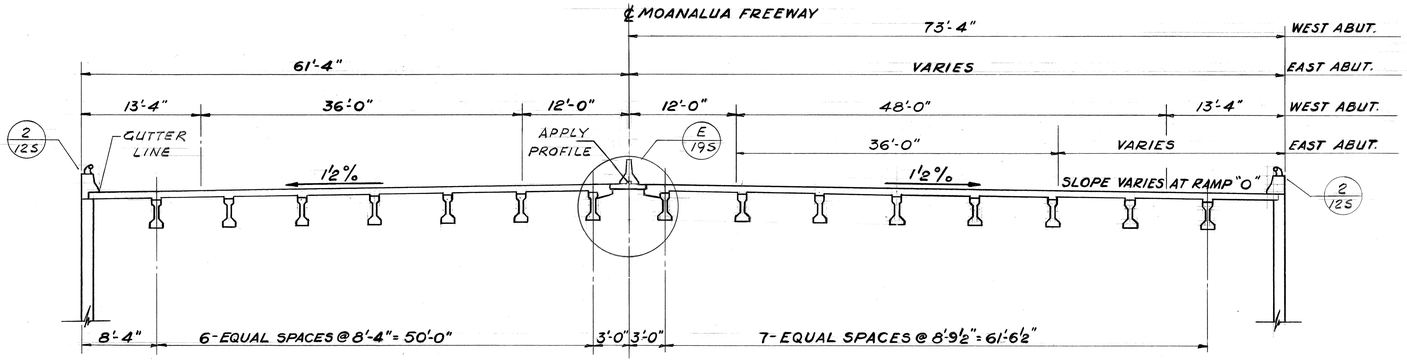


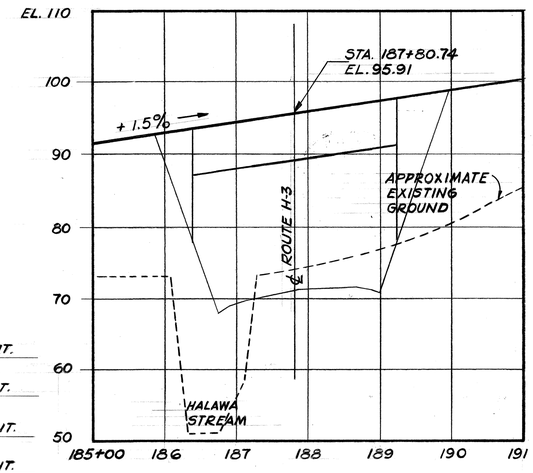


## PROFILE - MOANALUA FREEWAY

HORIZ. 1"=100' VERT. 1"=10'

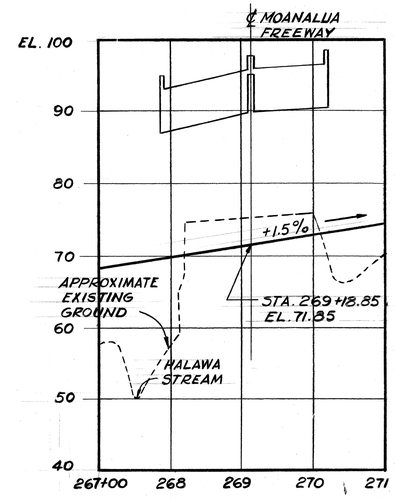


## PROFILE - INTERSTATE H-3

HORIZ. 1"=100' VERT. 1"=10'

## TYPICAL CROSS SECTION-TYPE III AASHO- BEAMS

SCALE: 1/8"=1'-0"

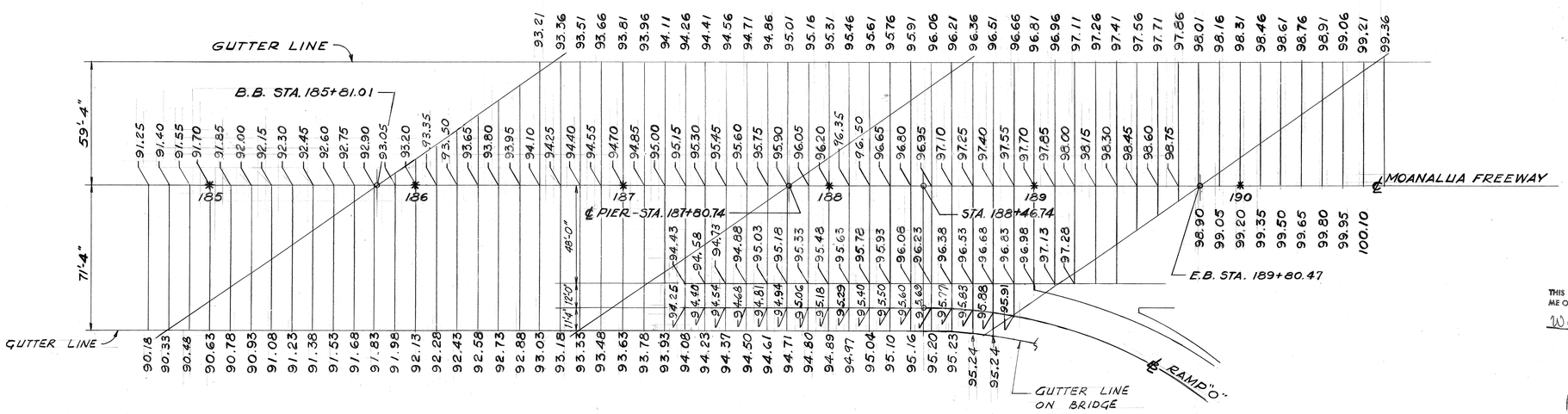


## 10 FT. GRID GRADES

SCALE: 1"=30'

## NOTES

1. CROSS-SECTIONS ARE PROJECTIONS ON A PLANE NORMAL TO ℄ MOANALUA FREEWAY
2. ALL DIMENSIONS ON CROSS SECTIONS ARE MEASURED NORMAL TO ℄ MOANALUA FREEWAY OR RADIAL TO RAMP "O".
3. GRID GRADE ELEVATIONS DO NOT INCLUDE ANY ALLOWANCE FOR CAMBER. SEE SHT. 145 FOR CAMBER DIAGRAM.

| ORIGINAL PLAN | | DATE |
|---|---|---|
| SURVEY PLOTTED BY | | |
| DRAWN BY | | |
| TRACED BY | | |
| DESIGNED BY | | |
| QUANTITIES BY | | |
| CHECKED BY | | |
| NOTE BOOK No. | | |

THIS WORK WAS PREPARED BY ME OR UNDER MY SUPERVISION.
Wm. J. Armento

WILLIAM J. ARMENTO REGISTERED PROFESSIONAL ENGINEER No. 1943 HAWAII, U.S.A.

STATE OF HAWAII
DEPARTMENT OF TRANSPORTATION
HIGHWAYS DIVISION

HALAWA INTERCHANGE STRUCTURE NO. 4

MOANALUA FREEWAY OVER H-3

TYPICAL CROSS SECTIONS, 10' GRID GRADES & PROFILES

PROJ. No. I-H1-1(89):13 DATE: MAY 1971

SHEET No. 25 OF 195 SHEETS

183

| FED. ROAD DIST. NO. | STATE | FED. AID PROJ. NO. | FISCAL YEAR | SHEET NO. | TOTAL SHEETS |
|---|---|---|---|---|---|
| HAWAII | HAW. | I-H1-1(89):13 | 1971 | 184 | 362 |




FOOTING SECTION

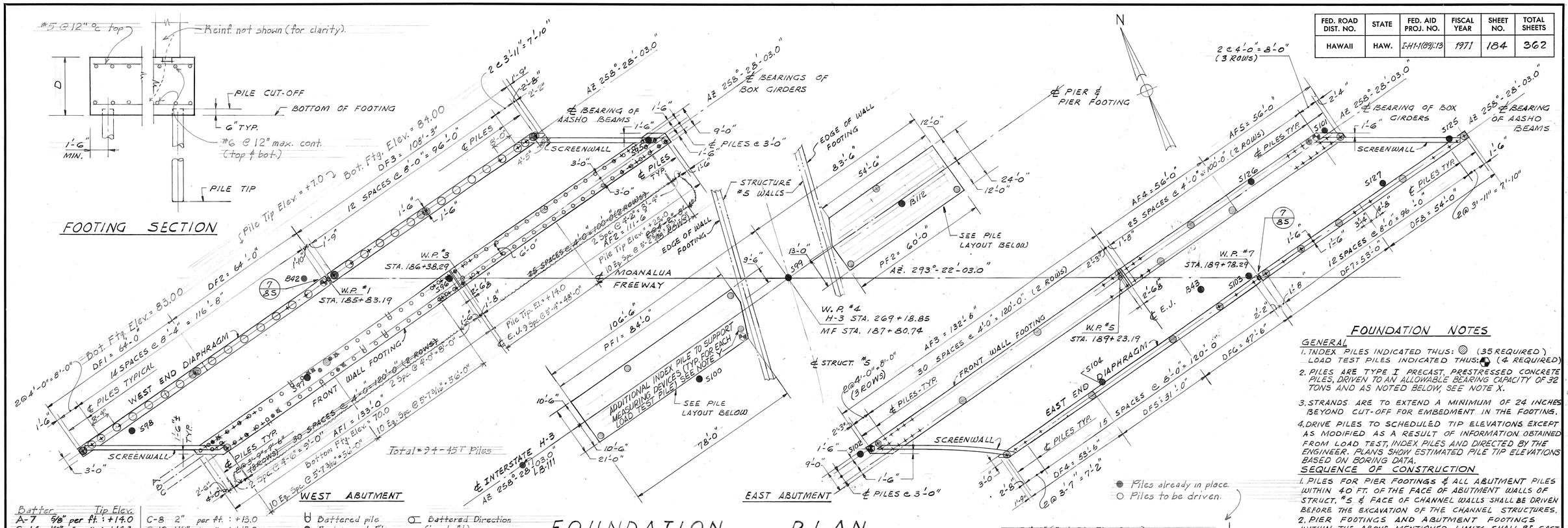


FOUNDATION PLAN

1" = 20'

| Batter | Tip Elev. |
|---|---|
| A-7 5/8" per ft. | : +14.0 |
| C-14 1/2" " " | : +14.3 |
| A-16 5/8" " " | : +11.8 |
| C-8 2" per ft. | : +13.0 |
| C-10 1 1/4" " " | : +15.0 |
| C-13 3/8" " " | : +11.3 |

Battered pile
Replacement Pile
Broken Pile
Battered Direction (i.e. left)

## FOOTING SCHEDULE

| MARK | FOOTING DIMENSIONS LENGTH (A) | WIDTH (B) | DEPTH (D) | NUMBER OF PILES | ELEVATIONS BOTTOM OF FOOTG | PILE CUTOFF | PILE TIP |
|---|---|---|---|---|---|---|---|
| DF1 | 64'-0" | 3'-0" | VARIES | 9 | 83.00 | 83.50 | +12.0 |
| DF2 | 64'-0" | 3'-0" | VARIES | 8 | 84.00 | 84.50 | +12.0 |
| DF3 | 108'-3" | 3'-0" | VARIES | 15 | 85.00 | 85.50 | +12.0 |
| AF1 | 133'-0" | 9'-0" | 3'-0" | 66 | 68.00 | 68.50 | +14.0 |
| AF2 | 111'-6" | 9'-0" | 3'-0" | 56 | 70.00 | 70.50 | +14.0 |
| | | | | | | | |
| PF1 | SEE | PLAN | 4'-6" | 168 | 62.50 | 63.00 | -3.0 |
| PF2 | SEE | PLAN | 5'-0" | 136 | 64.00 | 64.50 | -19.0 |
| | | | | | | | |
| | | | | | | | |
| | | | | | | | |
| | | | | | | | |
| AF3 | 132'-6" | 9'-0" | 3'-0" | 66 | 71.00 | 71.50 | +6.0 |
| AF4 | 56'-0" | 9'-0" | 3'-0" | 28 | 73.00 | 73.50 | +6.0 |
| AF5 | 56'-0" | 9'-0" | 3'-0" | 28 | 73.00 | 73.50 | +60.0 |
| | | | | | | | |
| DF4 | 53'-6" | 3'-0" | VARIES | 8 | 88.00 | 88.50 | +6.0 |
| DF5 | 31'-0" | 3'-0" | VARIES | 4 | 89.00 | 89.50 | +6.0 |
| DF6 | 47'-6" | 3'-0" | VARIES | 6 | 90.00 | 90.50 | +6.0 |
| DF7 | 53'-0" | 3'-0" | VARIES | 7 | 91.00 | 91.50 | +6.0 |
| DF8 | 54'-0" | 3'-0" | VARIES | 8 | 91.00 | 91.50 | +56.0 |

Notes: Diaphragm design to remain as shown on contract plans. For details not shown, see contract plans.

S96 ● - INDICATES MARK & APPROXIMATE LOCATIONS OF SOIL BORINGS

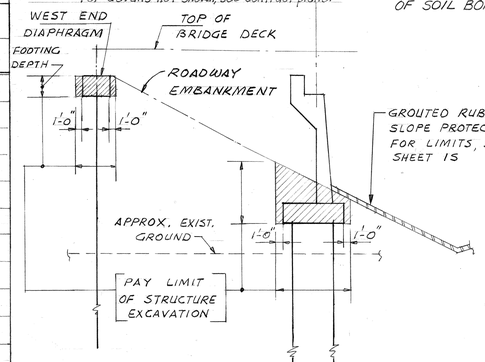


WEST ABUTMENT

WEST END SHOWN- EAST END SIMILAR

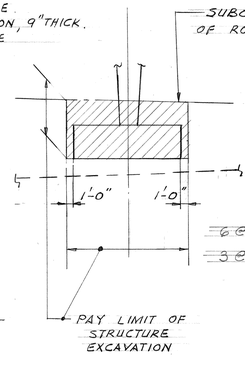


AT PF1 & PF2

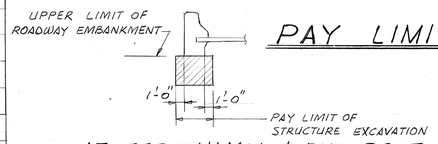


PAY LIMITS

AT SCREENWALL & END POST

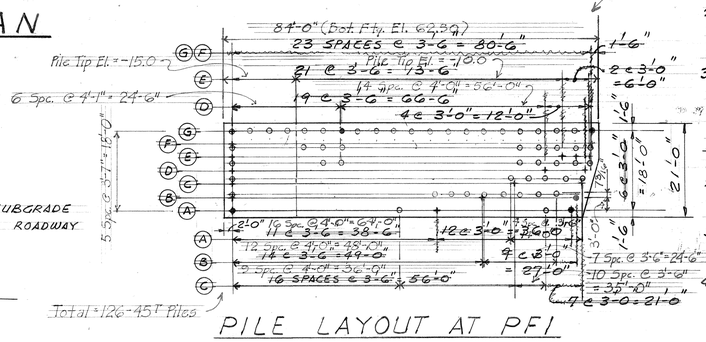


PILE LAYOUT AT PF1

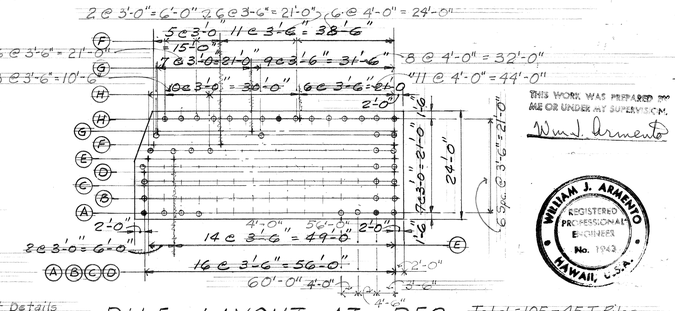


PILE LAYOUT AT PF2

● Piles already in place.
○ Piles to be driven.

Note:
1. Use same Elevation & Reinforcement Details shown in Contract Plans. (Bot. Ftg. 64.0/Pile tip -12.0)
2. For details not shown, see Contract Plans.

## FOUNDATION NOTES

GENERAL

1. INDEX PILES INDICATED THUS: ◎ (35 REQUIRED)
   LOAD TEST PILES INDICATED THUS: ● (4 REQUIRED)
2. PILES ARE TYPE I PRECAST, PRESTRESSED CONCRETE PILES, DRIVEN TO AN ALLOWABLE BEARING CAPACITY OF 32 TONS AND AS NOTED BELOW, SEE NOTE X.
3. STRANDS ARE TO EXTEND A MINIMUM OF 24 INCHES BEYOND CUT-OFF FOR EMBEDMENT IN THE FOOTINGS.
4. DRIVE PILES TO SCHEDULED TIP ELEVATIONS EXCEPT AS MODIFIED AS A RESULT OF INFORMATION OBTAINED FROM LOAD TEST, INDEX PILES AND DIRECTED BY THE ENGINEER. PLANS SHOW ESTIMATED PILE TIP ELEVATIONS BASED ON BORING DATA.

SEQUENCE OF CONSTRUCTION

1. PILES FOR PIER FOOTINGS & ALL ABUTMENT PILES WITHIN 40 FT. OF THE FACE OF ABUTMENT WALLS OF STRUCT. #5 & FACE OF CHANNEL WALLS SHALL BE DRIVEN BEFORE THE EXCAVATION OF THE CHANNEL STRUCTURES.
2. PIER FOOTINGS AND ABUTMENT FOOTINGS WITHIN THE ABOVE MENTIONED LIMITS SHALL BE CAST AFTER THE CONSTRUCTION OF THE STRUCT. #5 WALLS & CHANNEL WALLS ARE COMPLETED.
3. THE CONTRACTOR SHALL DRIVE THE TEMPORARY SHEET PILING IN THE AREAS SHOWN ON THE PLANS FOR THE STRUCT. #5 CONSTRUCTION PRIOR TO ANY EXCAVATION FOR THE CHANNEL STRUCTURES.

PIERS AND ABUTMENTS

1. EXCAVATE TO REQUIRED ELEVATIONS.
2. DRIVE LOAD TEST PILES, PERFORM LOAD TESTS AND DETERMINE DEPTH & DRIVING RESISTANCE REQUIRED TO DEVELOP SPECIFIED LOAD. (SEE NOTE X BELOW).
3. DRIVE INDEX PILES & DETERMINE TIP ELEVATIONS FOR REMAINING PILES. INDEX PILES SHALL BE DRIVEN BEFORE CASTING BALANCE OF PILES.
4. PREDRILL HOLES FOR PILES THROUGH THE COMPACTED EMBANKMENT AND ELSEWHERE AS DIRECTED BY THE ENGINEER. HOLES ARE TO BE 6" LARGER THAN THE PILE DIAMETER. AFTER DRIVING PILES, FILL VOID SPACE WITH FINE AGGREGATE AS SPECIFIED.

NOTE X:

LOAD TEST FOUR PILES FOR 45 TON CAPACITY (AS DIRECTED BY THE ENGINEER) BEFORE DRIVING BALANCE OF INDEX PILES. IF LOAD TESTS SHOW THAT 45 TON PILES SHOULD BE USED, ALL PILE FOUNDATIONS WILL BE REDESIGNED. (SEE SPECIFICATIONS.)

NOTE Y:

CHOICE OF TEST PILE USED TO SUPPORT MEASURING DEVICES MAY BE ALTERED UPON APPROVAL BY ENGINEER.

THIS WORK WAS PREPARED BY ME OR UNDER MY SUPERVISION.
William J. Armento

WILLIAM J. ARMENTO
REGISTERED PROFESSIONAL ENGINEER
No. 1942
HAWAII, U.S.A.

STATE OF HAWAII
DEPARTMENT OF TRANSPORTATION
HIGHWAYS DIVISION

HALAWA INTERCHANGE
STRUCTURE NO. 4

MOANALUA FREEWAY OVER H-3

FOUNDATION PLAN

PROJ. No. I-H1-1(89):13 DATE: MAY 1971

SHEET No. 35 OF 195 SHEETS

| ORIGINAL PLAN | | DATE |
|---|---|---|
| | SURVEY PLOTTED BY | |
| | DRAWN BY | |
| | TRACED BY | 1/25/70 |
| | DESIGNED BY | 1/25/70 |
| NOTE BOOK | QUANTITIES BY | " |
| | CHECKED BY | " |
| No. | | 3/29/70 |

1 S 4

| FED. ROAD DIST. NO. | STATE | FED. AID PROJ. NO. | FISCAL YEAR | SHEET NO. | TOTAL SHEETS |
|---|---|---|---|---|---|
| HAWAII | HAW. | I-H1-1(89):13 | 1971 | 185 | 362 |

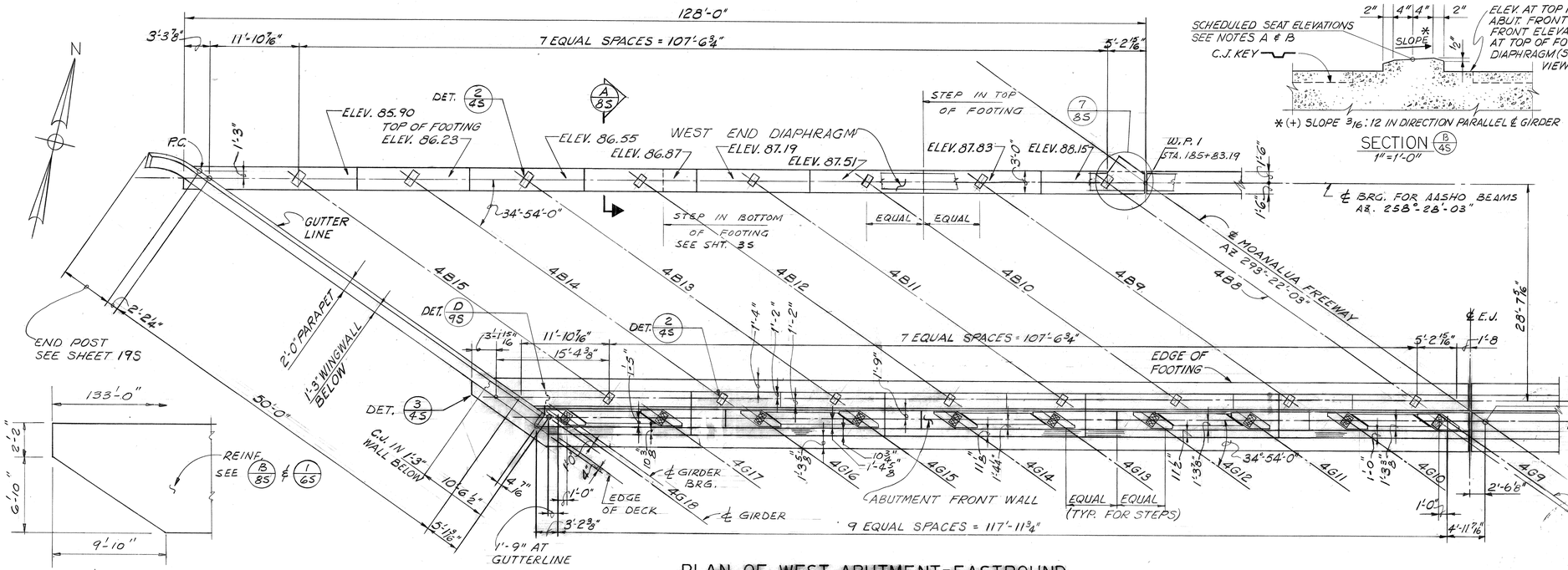


## PLAN OF WEST ABUTMENT-EASTBOUND

SCALE: ⅛" = 1'-0"




## PLAN OF FOOTING

## DETAIL 3/4S

| SEAT ELEVATIONS | | |
|---|---|---|
| BEAM OR GIRDER MARK | ELEVATION AT TOP OF CONCRETE LEVELING PAD AND CONCRETE PEDESTAL | |
| | FRONT WALL | END DIAPHRAGM |
| 4B8 | 89.07 | 88.32 |
| 4B9 | 88.75 | 88.00 |
| 4B10 | 88.43 | 87.68 |
| 4B11 | 88.11 | 87.36 |
| 4B12 | 87.79 | 87.04 |
| 4B13 | 87.47 | 86.72 |
| 4B14 | 87.15 | 86.40 |
| 4B15 | 86.82 | 86.07 |
| 4G9 | 87.56 | |
| 4G10 | 87.29 | |
| 4G11 | 87.01 | |
| 4G12 | 86.74 | |
| 4G13 | 86.47 | |
| 4G14 | 86.19 | |
| 4G15 | 85.92 | |
| 4G16 | 85.65 | |
| 4G17 | 85.37 | |
| 4G18 | 85.10 | |

SEE SECTIONS B/4S AND A/4S




SECTION B/4S
1" = 1'-0"

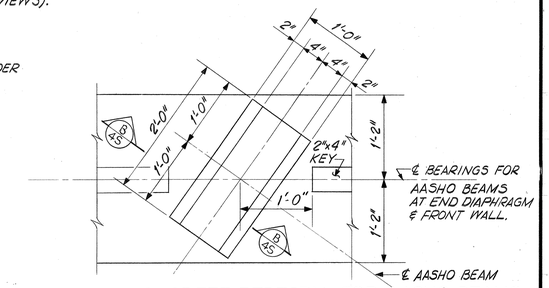


## PLAN-CONCRETE PEDESTAL FOR AASHO BEAMS

DETAIL 2/4S

NOTES:

A. CONCRETE PEDESTAL IS MONOLITHIC WITH BASE.

B. SLUSH GROUT ON CONC. SEAT IMMEDIATELY BEFORE PLACING GIRDER.

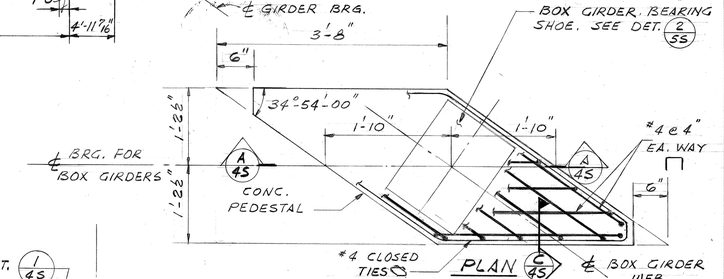


## PEDESTAL FOR BOX GIRDER BEARING

DETAIL 1/4S NO SCALE

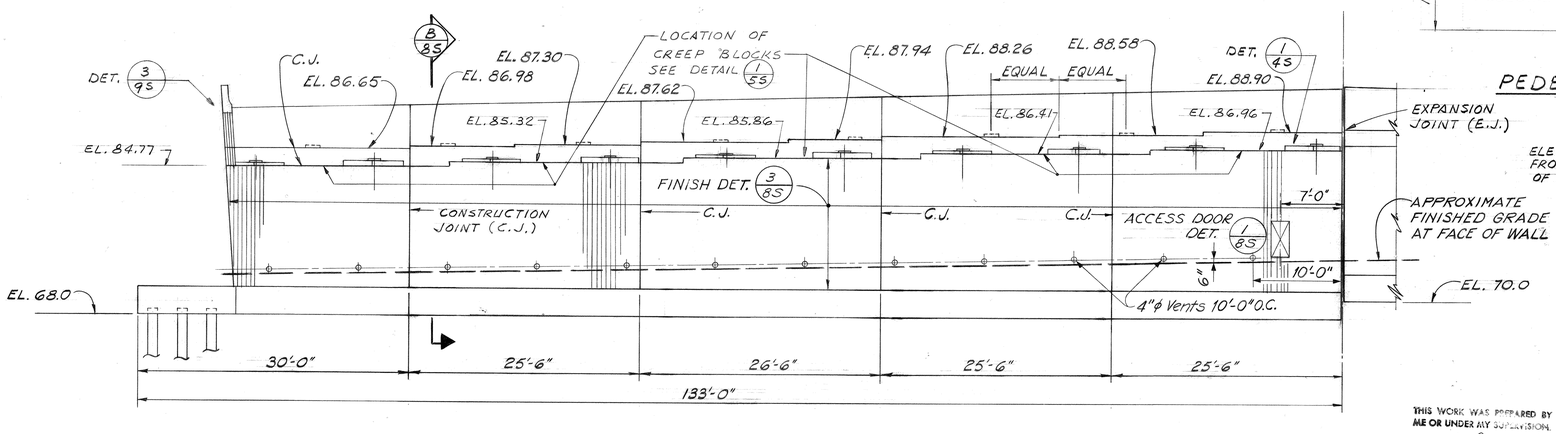


## FRONT ELEVATION OF WEST ABUTMENT-EASTBOUND

SCALE: ⅛" = 1'-0"

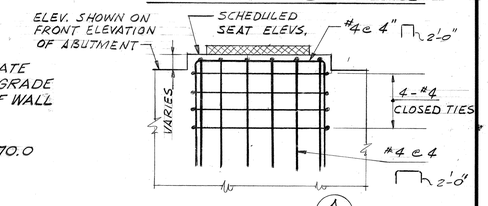


SECTION A/4S
NO SCALE

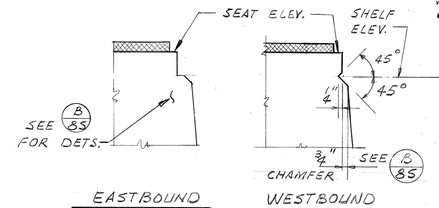


SECTION C/4S

THIS WORK WAS PREPARED BY ME OR UNDER MY SUPERVISION.
Wm. J. Armento

WILLIAM J. ARMENTO
REGISTERED PROFESSIONAL ENGINEER
No. 1543
HAWAII, U.S.A.

STATE OF HAWAII
DEPARTMENT OF TRANSPORTATION
HIGHWAYS DIVISION

HALAWA INTERCHANGE
STRUCTURE NO. 4
MOANALUA FREEWAY OVER H-3

WEST ABUTMENT, EASTBOUND

PROJ. No. I-H1-1(89):13 DATE: MAY 1971

SHEET No. 4S OF 19S SHEETS

| ORIGINAL PLAN | | DATE |
|---|---|---|
| | SURVEY PLOTTED BY | 5/24/70 |
| | DRAWN BY | " " " |
| | TRACED BY | 6/19/70 |
| | DESIGNED BY | 10/1970 |
| NOTE BOOK | QUANTITIES BY | " " " |
| No. | CHECKED BY | 5/24/70 |

185

| FED. ROAD DIST. NO. | STATE | FED. AID PROJ. NO. | FISCAL YEAR | SHEET NO. | TOTAL SHEETS |
|---|---|---|---|---|---|
| HAWAII | HAW. | I-H1-1(89):13 | 1971 | 186 | 362 |

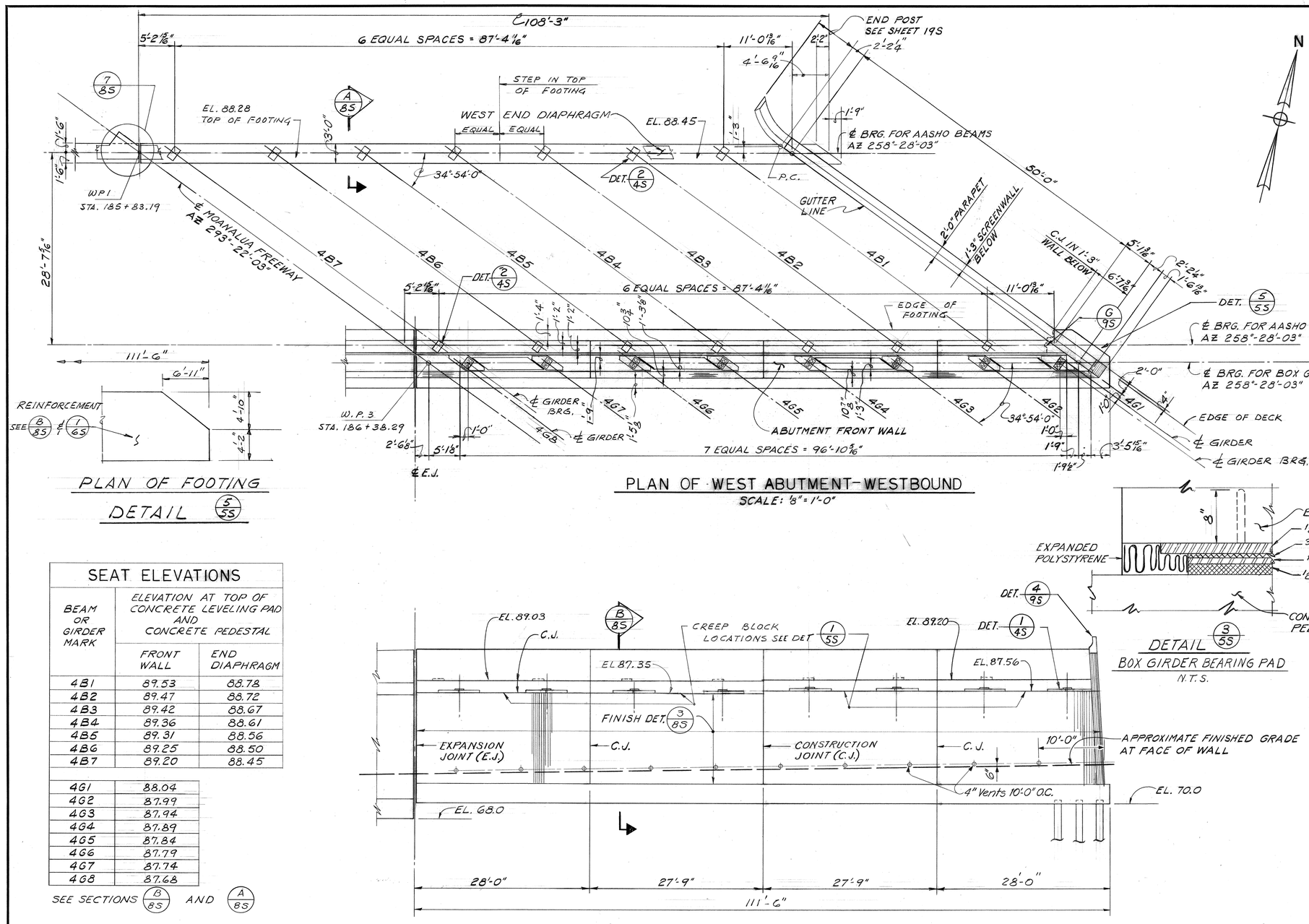


PLAN OF FOOTING DETAIL 5/5S

PLAN OF WEST ABUTMENT-WESTBOUND

SCALE: 1/8" = 1'-0"

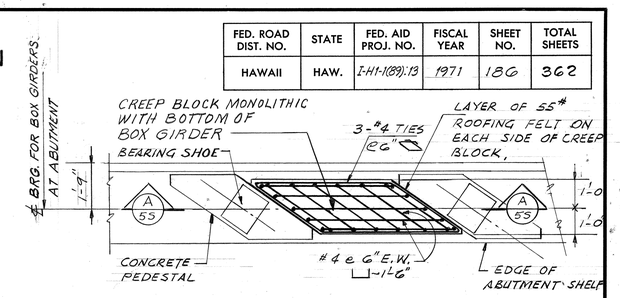


PLAN OF CREEP BLOCK DETAIL

DETAIL 1/5S

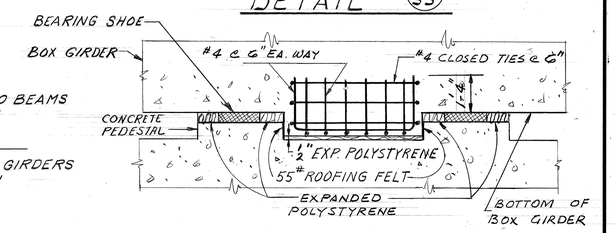


SECTION A/5S

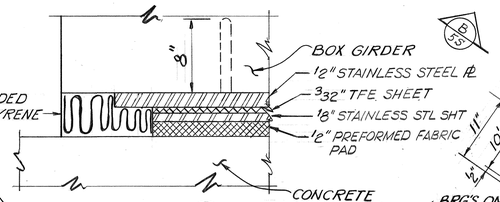


DETAIL 3/5S
BOX GIRDER BEARING PAD
N.T.S.

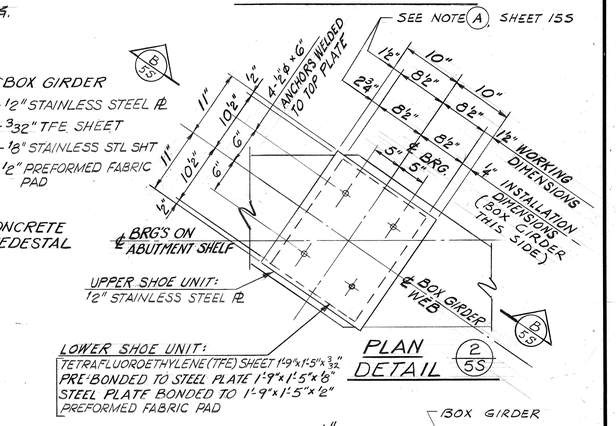


PLAN DETAIL 2/5S




FRONT ELEVATION OF WEST ABUTMENT-WESTBOUND

SCALE: 1/8" = 1'-0"

## SEAT ELEVATIONS

| BEAM OR GIRDER MARK | ELEVATION AT TOP OF CONCRETE LEVELING PAD AND CONCRETE PEDESTAL | |
|---|---|---|
| | FRONT WALL | END DIAPHRAGM |
| 4B1 | 89.53 | 88.78 |
| 4B2 | 89.47 | 88.72 |
| 4B3 | 89.42 | 88.67 |
| 4B4 | 89.36 | 88.61 |
| 4B5 | 89.31 | 88.56 |
| 4B6 | 89.25 | 88.50 |
| 4B7 | 89.20 | 88.45 |
| 4G1 | 88.04 | |
| 4G2 | 87.99 | |
| 4G3 | 87.94 | |
| 4G4 | 87.89 | |
| 4G5 | 87.84 | |
| 4G6 | 87.79 | |
| 4G7 | 87.74 | |
| 4G8 | 87.68 | |

SEE SECTIONS B/8S AND A/8S

| ORIGINAL PLAN | | |
|---|---|---|
| | SURVEY PLOTTED BY | DATE |
| | DRAWN BY | 8/24/70 |
| | TRACED BY | " " |
| | DESIGNED BY | 8/24/70 |
| NOTE BOOK | QUANTITIES BY | " " |
| No. | CHECKED BY | 3/24/70 |

THIS WORK WAS PREPARED BY ME OR UNDER MY SUPERVISION.

Wm. J. Armento

WILLIAM J. ARMENTO REGISTERED PROFESSIONAL ENGINEER No. 1942 HAWAII, U.S.A.

STATE OF HAWAII
DEPARTMENT OF TRANSPORTATION
HIGHWAYS DIVISION

HALAWA INTERCHANGE
STRUCTURE NO. 4
MOANALUA FREEWAY OVER H-3
WEST ABUTMENT,
WESTBOUND

PROJ. No. I-H1-1(89):13 DATE: MAY 1971

SHEET No. 5S OF 19S SHEETS

186

186

| FED. ROAD DIST. NO. | STATE | FED. AID PROJ. NO. | FISCAL YEAR | SHEET NO. | TOTAL SHEETS |
|---|---|---|---|---|---|
| HAWAII | HAW. | I-H1-1(89):13 | 1971 | 187 | 362 |

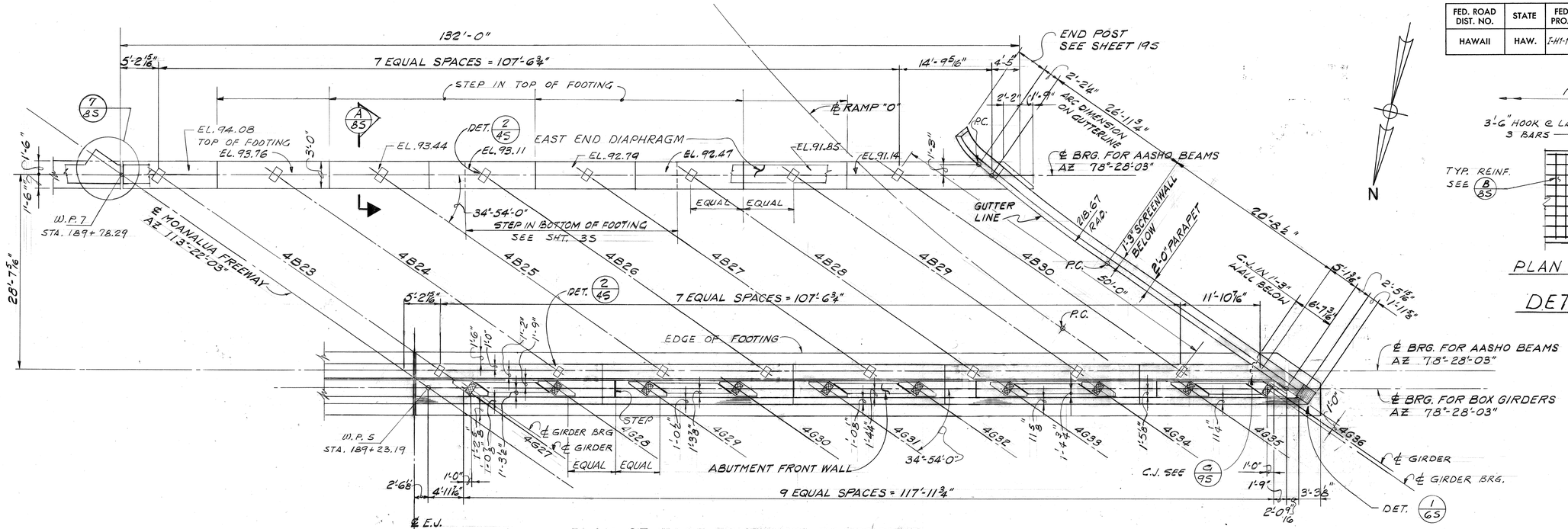


PLAN OF EAST ABUTMENT-EASTBOUND

SCALE: ⅛" = 1'-0"

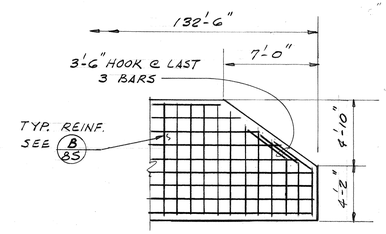


PLAN OF FOOTING

DETAIL 1/6S

## SEAT ELEVATIONS

| BEAM OR GIRDER MARK | ELEVATION AT TOP OF CONCRETE LEVELING PAD AND CONCRETE PEDESTAL | |
|---|---|---|
| | FRONT WALL | END DIAPHRAGM |
| 4B23 | 93.50 | 94.25 |
| 4B24 | 93.18 | 93.93 |
| 4B25 | 92.86 | 93.61 |
| 4B26 | 92.53 | 93.28 |
| 4B27 | 92.21 | 92.96 |
| 4B28 | 91.87 | 92.62 |
| 4B29 | 91.31 | 92.00 |
| 4B30 | 90.85 | 91.29 |
| 4G27 | 91.84 | |
| 4G28 | 91.56 | |
| 4G29 | 91.29 | |
| 4G30 | 91.01 | |
| 4G31 | 90.74 | |
| 4G32 | 90.47 | |
| 4G33 | 90.19 | |
| 4G34 | 89.92 | |
| 4G35 | 89.64 | |
| 4G36 | 89.37 | |

SEE SECTIONS B/8S AND A/8S

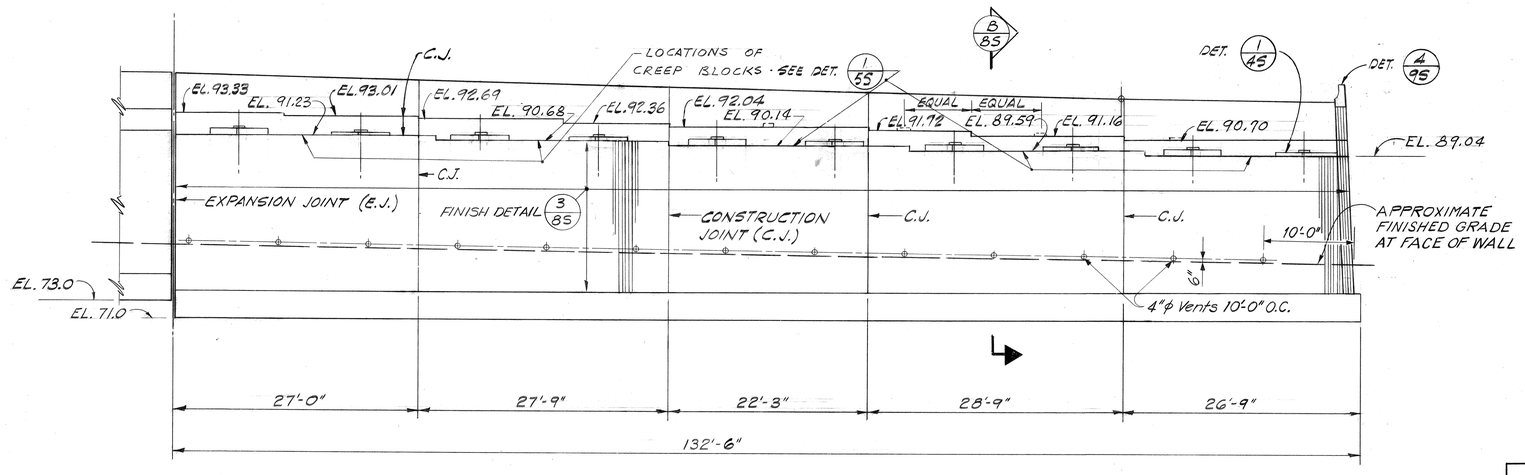


FRONT ELEVATION OF EAST ABUTMENT-EASTBOUND

SCALE: ⅛" = 1'-0"

THIS WORK WAS PREPARED BY ME OR UNDER MY SUPERVISION.

Wm. J. Armento

WILLIAM J. ARMENTO REGISTERED PROFESSIONAL ENGINEER No. 1943 HAWAII, U.S.A.

STATE OF HAWAII
DEPARTMENT OF TRANSPORTATION
HIGHWAYS DIVISION

HALAWA INTERCHANGE
STRUCTURE NO. 4
MOANALUA FREEWAY OVER H-3
EAST ABUTMENT, EASTBOUND

PROJ. No. I-H1-1(89):13 DATE: MAY 1971

SHEET No. 6S OF 19S SHEETS

187

| ORIGINAL PLAN | | DATE |
|---|---|---|
| | SURVEY PLOTTED BY | |
| | DRAWN BY R. Kobayashi | 5/1/70 |
| | TRACED BY | 5/1/70 |
| NOTE BOOK | DESIGNED BY M. A. de Mesquita | |
| | QUANTITIES BY | |
| No. | CHECKED BY Leo Ayres | 5/1/70 |

| FED. ROAD DIST. NO. | STATE | FED. AID PROJ. NO. | FISCAL YEAR | SHEET NO. | TOTAL SHEETS |
|---|---|---|---|---|---|
| HAWAII | HAW. | I-H1-1(89):13 | 1971 | 188 | 362 |

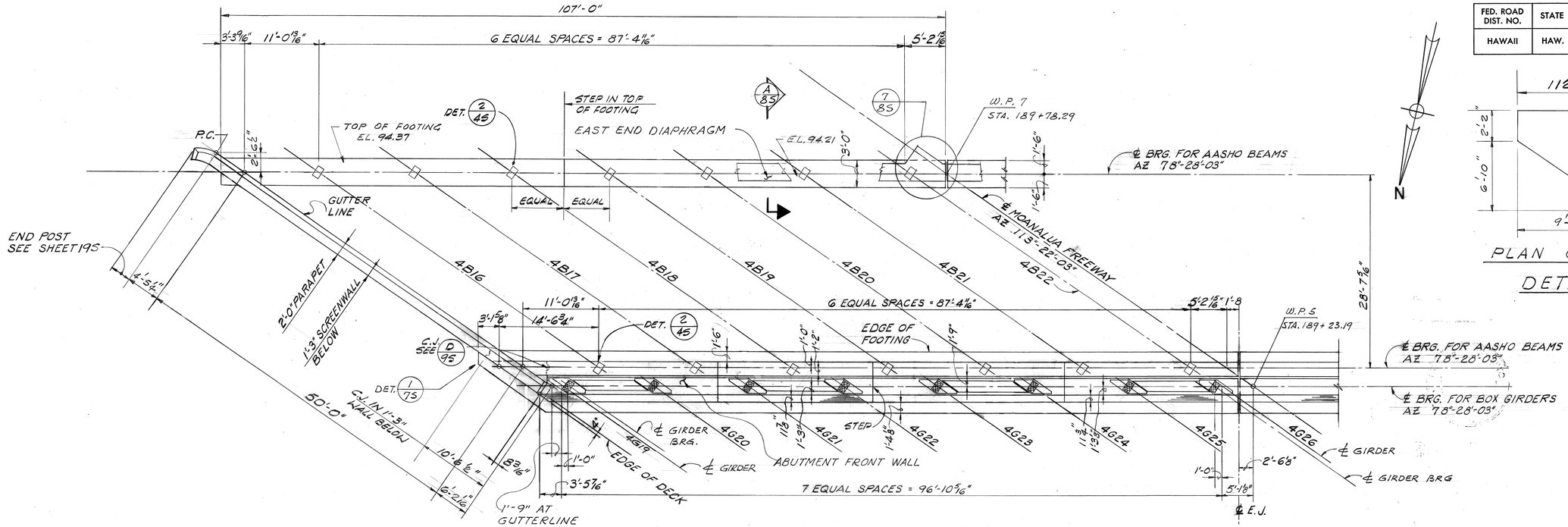


PLAN OF EAST ABUTMENT-WESTBOUND

SCALE: 1/8" = 1'-0"

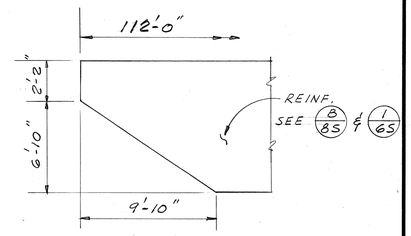


PLAN OF FOOTING

DETAIL 1/7S

## SEAT ELEVATIONS

| BEAM OR GIRDER MARK | ELEVATION AT TOP OF CONCRETE LEVELING PAD AND CONCRETE PEDESTAL | |
|---|---|---|
| | FRONT WALL | END DIAPHRAGM |
| 4B16 | 93.95 | 94.70 |
| 4B17 | 93.90 | 94.65 |
| 4B18 | 93.84 | 94.59 |
| 4B19 | 93.79 | 94.54 |
| 4B20 | 93.73 | 94.48 |
| 4B21 | 93.68 | 94.43 |
| 4B22 | 93.63 | 94.38 |
| 4G19 | 92.32 | |
| 4G20 | 92.27 | |
| 4G21 | 92.21 | |
| 4G22 | 92.16 | |
| 4G23 | 92.11 | |
| 4G24 | 92.06 | |
| 4G25 | 92.01 | |
| 4G26 | 91.96 | |

SEE SECTIONS B/8S AND A/8S

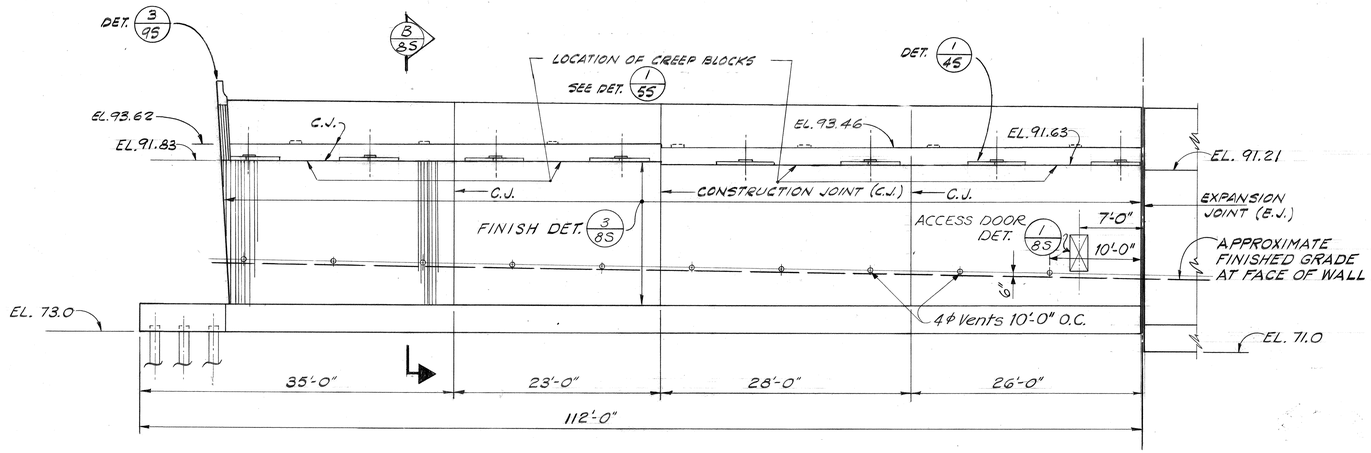


FRONT ELEVATION OF EAST ABUTMENT-WESTBOUND

SCALE: 1/8" = 1'-0"

| ORIGINAL PLAN | | DATE |
|---|---|---|
| | SURVEY PLOTTED BY | |
| | DRAWN BY | 5/24/70 |
| | TRACED BY | " " |
| | DESIGNED BY | " " |
| NOTE BOOK | TYPED BY | 12/2/70 |
| | QUANTITIES BY | " " |
| No. | CHECKED BY | 12/2/70 |

THIS WORK WAS PREPARED BY ME OR UNDER MY SUPERVISION.

Wm. J. Armento

WILLIAM J. ARMENTO REGISTERED PROFESSIONAL ENGINEER No. 1943 HAWAII, U.S.A.

STATE OF HAWAII
DEPARTMENT OF TRANSPORTATION
HIGHWAYS DIVISION

HALAWA INTERCHANGE
STRUCTURE NO. 4

MOANALUA FREEWAY OVER H-3

EAST ABUTMENT, WESTBOUND

PROJ. No. I-H1-1(89):13 DATE: MAY 1971

SHEET No. 7S OF 19S SHEETS

188

1 S S

| FED. ROAD DIST. NO. | STATE | FED. AID PROJ. NO. | FISCAL YEAR | SHEET NO. | TOTAL SHEETS |
|---|---|---|---|---|---|
| HAWAII | HAW. | I-H1-1(89):13 | 1971 | 189 | 362 |

1. * SLAB BARS PARALLEL TO AASHO BEAM.
2. ALL HORIZONTAL DIMENSIONS MEASURED NORMAL TO ℄ BRG.
3. INITIAL SET OF END BEAM TO BE RETARDED UNTIL COMPLETION OF SLAB POUR.

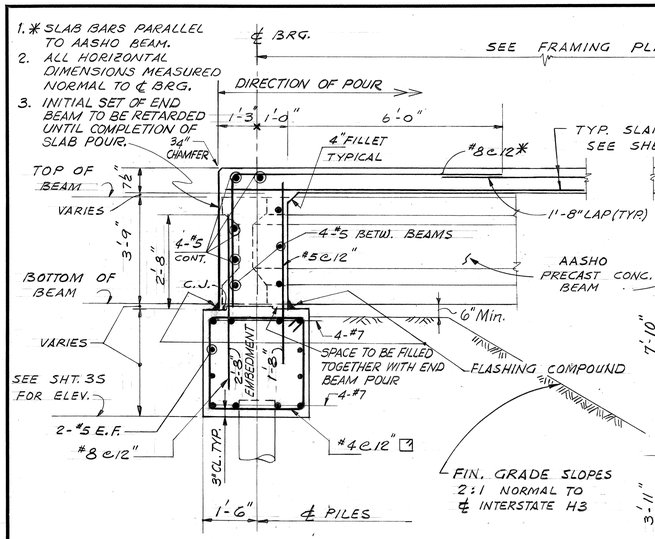


SECTION (A/8S)
1/2" = 1'-0

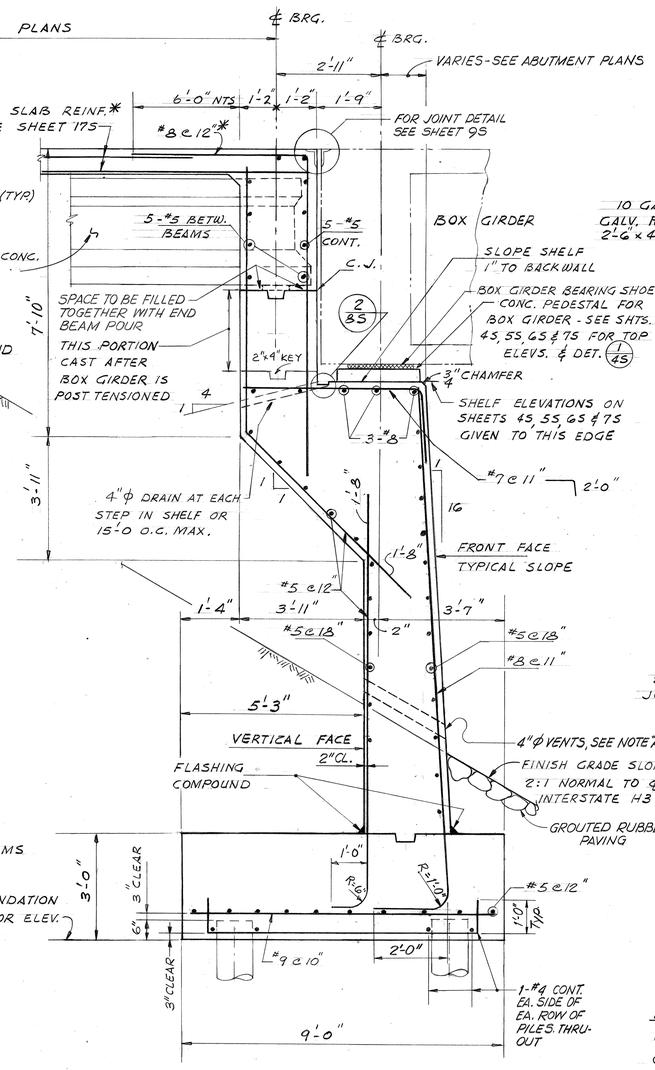


SECTION (B/8S)
1/2" = 1'-0

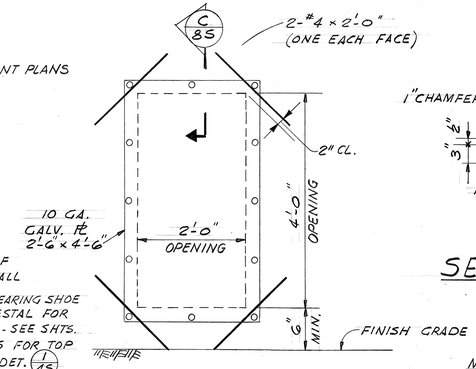


ACCESS DOOR DETAIL (1/8S)
3/4" = 1'-0"
SEE NOTE "A"

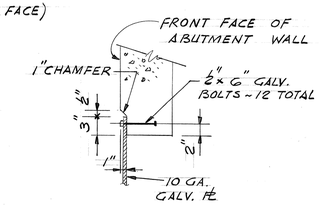


SECTION (G/8S)
1" = 1'-0

NOTE "A": PAYMENT FOR 4" ϕ VENTS, ACCESS DOOR AND ACCESS DOOR FASTENINGS SHALL BE INCLUDED WITH ITEM "CONCRETE IN STRUCTURE NO. 4 EXCEPT FOOTINGS & PRESTRESSED CAST-IN-PLACE STRUCTURES.

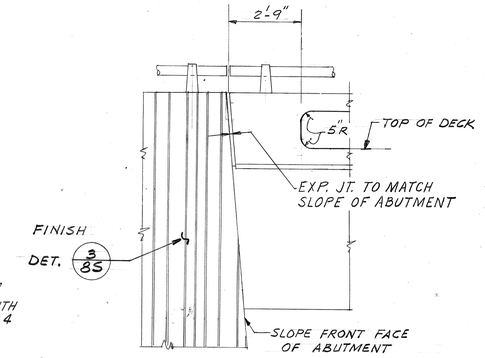


DETAIL (3/8S)
3/8" = 1'-0"

TYPICAL ELEVATION AT ABUTMENT CORNER

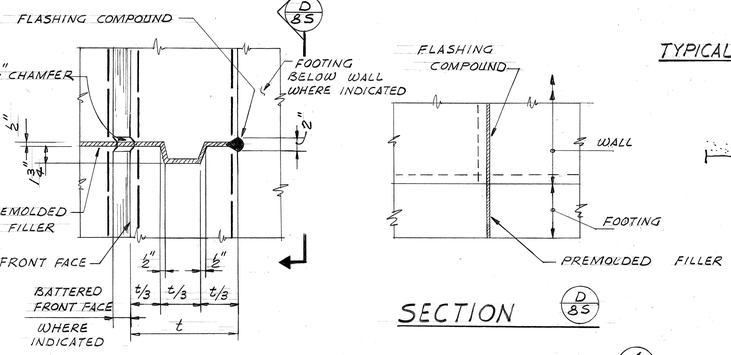


SECTION (D/8S)

EXPANSION JOINT DETAILS (4/8S)
1" = 1'-0"

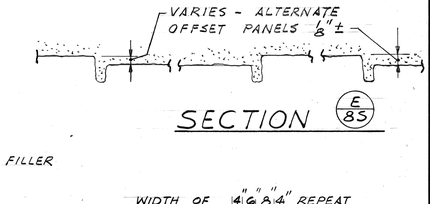


SECTION (E/8S)

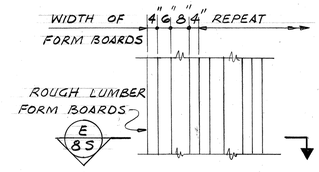


ROUGH FORMBOARD FINISH DETAIL (3/8S)

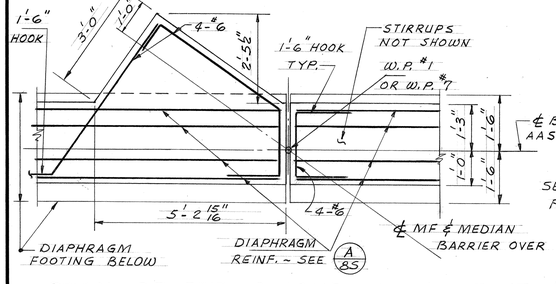


PLAN OF END DIAPHRAGM JOINT AT ℄ MF

DETAIL (7/8S)

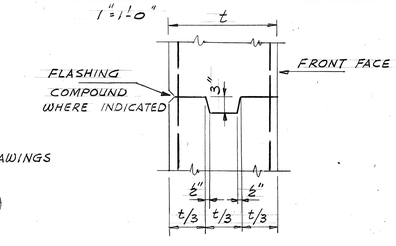


CONSTRUCTION JOINT DETAIL (5/8S)

NOTE: JOINTS INDICATED THUS ON DRAWINGS
E.J. = EXPANSION JOINT DET. (4/8S)
C.J. = CONSTRUCTION JOINT DETAIL (5/8S)

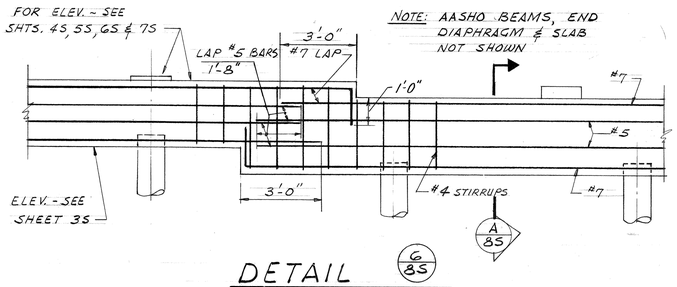


DETAIL (6/8S)

STEPPED FOOTING AT END DIAPHRAGMS

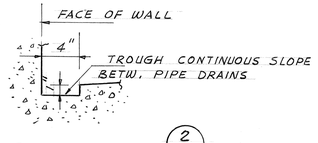


DETAIL (2/8S)
1 1/2" = 1'-0"

| ORIGINAL PLAN | | DATE |
|---|---|---|
| | SURVEY PLOTTED BY | 5/31/70 |
| | DRAWN BY | " " " " |
| | TRACED BY | 10/8/70 |
| NOTE BOOK | DESIGNED BY | 10/8/70 |
| | QUANTITIES BY | 5/29/70 |
| No. | CHECKED BY | |

THIS WORK WAS PREPARED BY ME OR UNDER MY SUPERVISION.
Wm. J. Armento

WILLIAM J. ARMENTO REGISTERED PROFESSIONAL ENGINEER No. 1943 HAWAII, U.S.A.

STATE OF HAWAII
DEPARTMENT OF TRANSPORTATION
HIGHWAYS DIVISION

HALAWA INTERCHANGE
STRUCTURE NO. 4
MOANALUA FREEWAY OVER H-3
ABUTMENT SECTIONS & DETAILS

PROJ. No. I-H1-1(89):13 DATE: MAY 1971

SHEET No. 8S OF 19S SHEETS

189

| FED. ROAD DIST. NO. | STATE | FED. AID PROJ. NO. | FISCAL YEAR | SHEET NO. | TOTAL SHEETS |
|---|---|---|---|---|---|
| HAWAII | HAW. | I-H1-1(89):13 | 1971 | 190 | 362 |

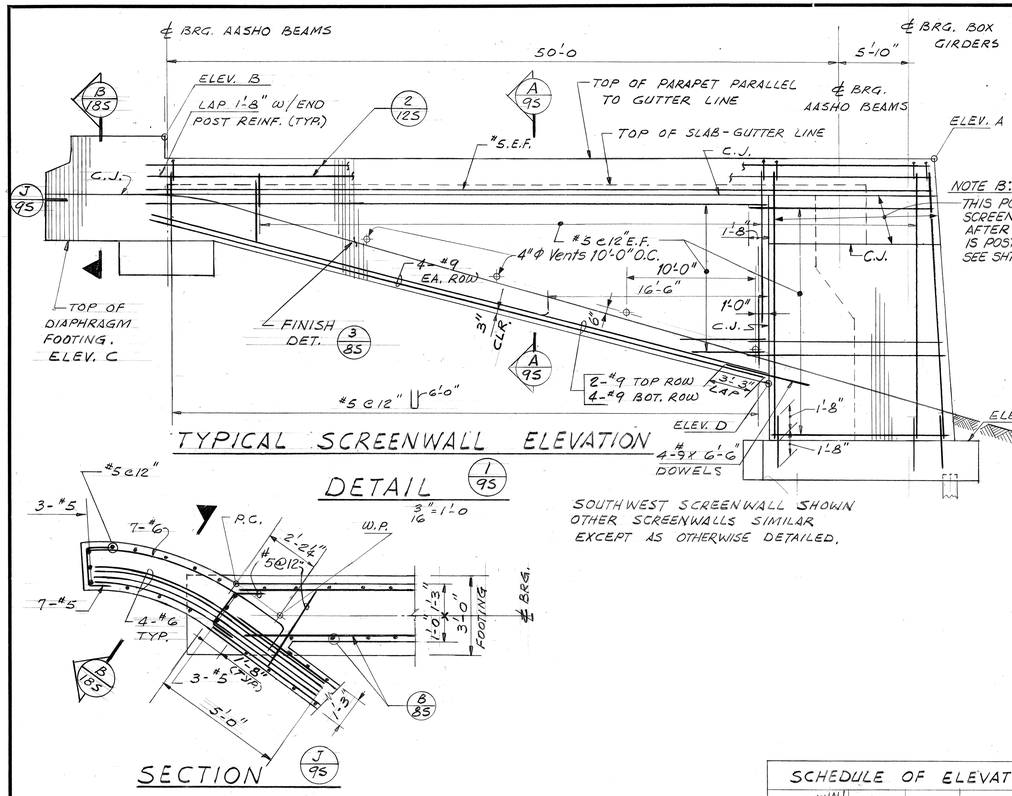


TYPICAL SCREENWALL ELEVATION

DETAIL 1/9S

3/16" = 1'-0




SECTION J/9S

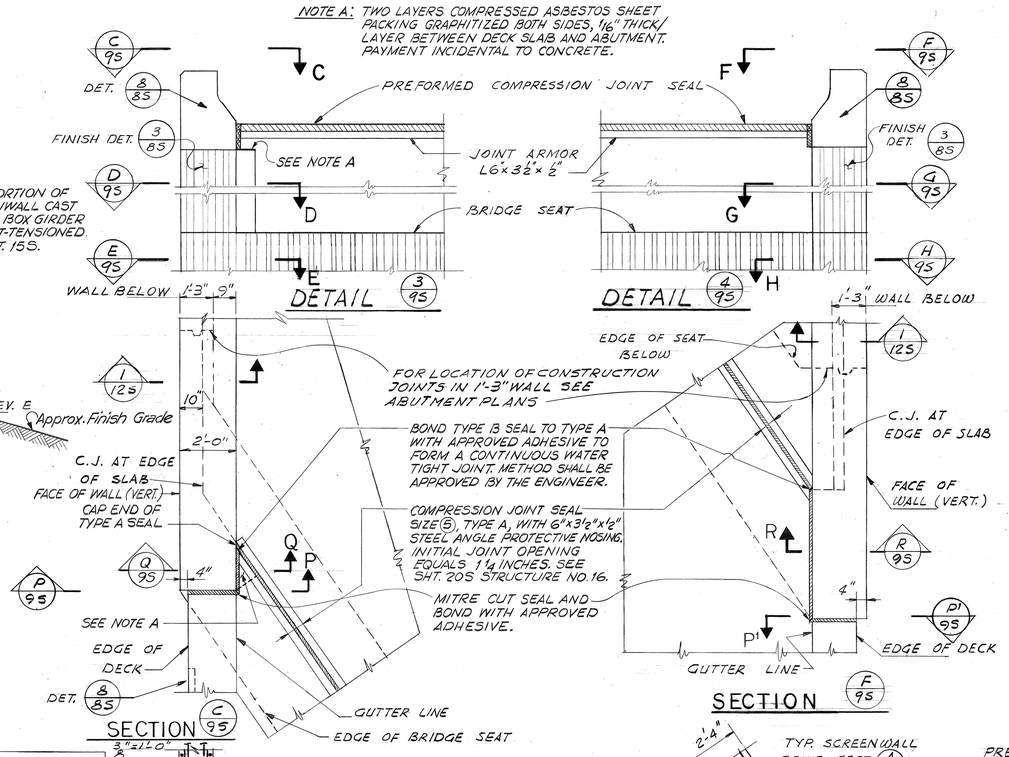


SECTION C/9S

SECTION F/9S

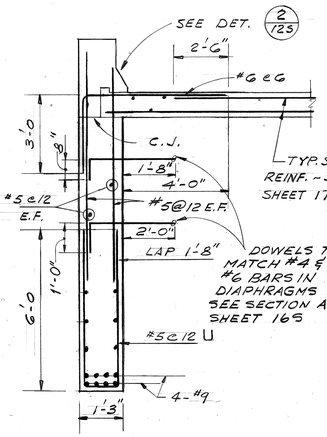


SECTION A/9S

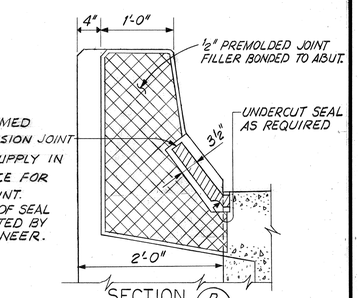


PREFORMED COMPRESSION JOINT SEAL. SUPPLY IN ONE PIECE FOR EACH JOINT. CAP END OF SEAL AS DIRECTED BY THE ENGINEER.

SECTION P/9S
1" = 1'-0"
SECTION P' SIMILAR

SCHEDULE OF ELEVATIONS

| SCREENWALL | A | B | C | D | E |
|---|---|---|---|---|---|
| SW | 93.13 | 93.49 | 85.90 | 75.11 | 71.0 |
| NW | 96.19 | 96.57 | 88.45 | 78.16 | 73.0 |
| SE | 96.95 | 98.45 | 91.14 | 78.83 | 74.0 |
| NE | 100.43 | 102.46 | 94.37 | 82.43 | 76.0 |

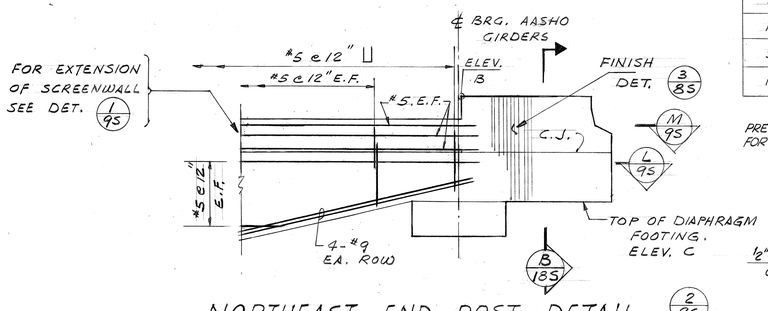


NORTHEAST END POST DETAIL 2/9S

3/16" = 1'-0

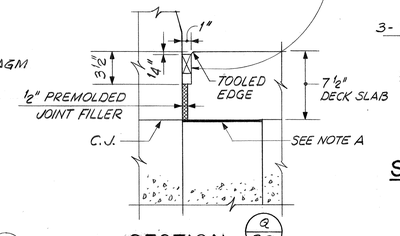


SECTION G/9S
1½" = 1'-0"

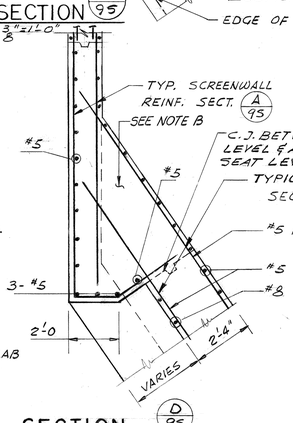


SECTION D/9S

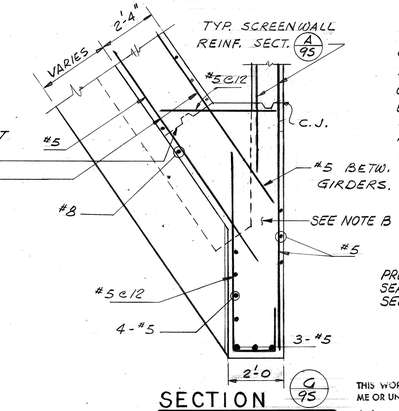


SECTION G/9S

THIS WORK WAS PREPARED BY ME OR UNDER MY SUPERVISION.
William Armento

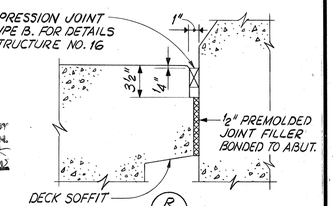


SECTION R/9S
1½" = 1'-0"

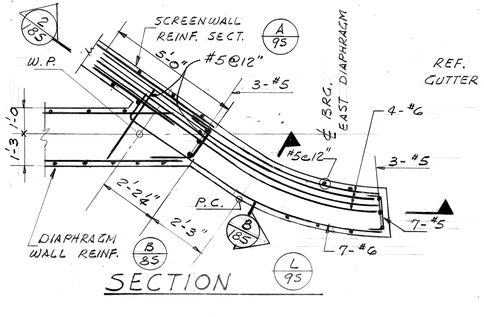


SECTION L/9S

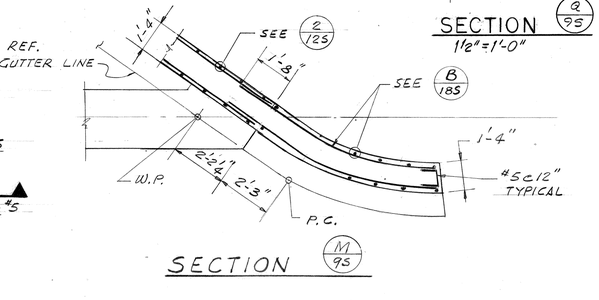


SECTION M/9S

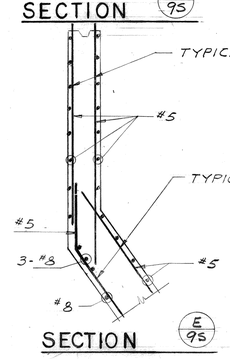


SECTION E/9S

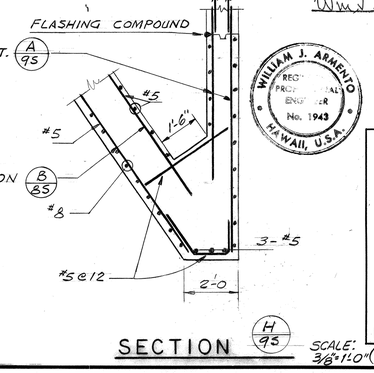


SECTION H/9S

WILLIAM J. ARMENTO REGISTERED PROFESSIONAL ENGINEER No. 1943 HAWAII, U.S.A.

STATE OF HAWAII
DEPARTMENT OF TRANSPORTATION
HIGHWAYS DIVISION

HALAWA INTERCHANGE
STRUCTURE NO. 4

MOANALUA FREEWAY OVER H-3

ABUTMENT SCREENWALLS

PROJ. No. I-H1-1(89):13 DATE: MAY 1971

SCALE: 3/8" = 1'-0" (UNLESS NOTED) SHEET No. 9S OF 19S SHEETS

| ORIGINAL PLAN | | DATE |
|---|---|---|
| | SURVEY PLOTTED BY | |
| | TRACED BY | |
| | DESIGNED BY | |
| NOTE BOOK | QUANTITIES BY | |
| No. | CHECKED BY | |

1 9 0

100 21-69 3

| FED. ROAD DIST. NO. | STATE | FED. AID PROJ. NO. | FISCAL YEAR | SHEET NO. | TOTAL SHEETS |
|---|---|---|---|---|---|
| HAWAII | HAW. | I-H1-1(89):13 | 1971 | 191 | 362 |

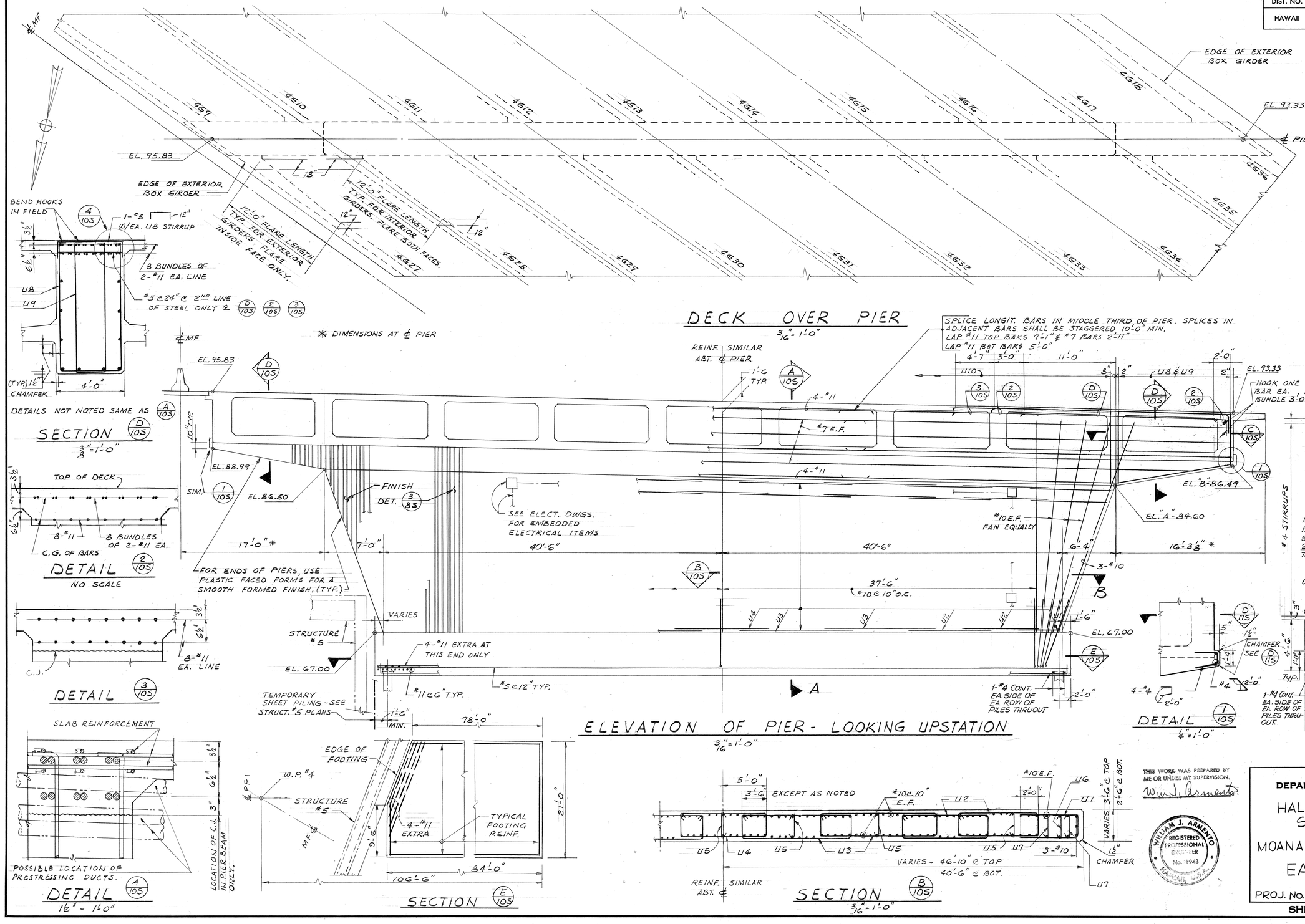





DETAILS NOT NOTED SAME AS A/10S

## SECTION D/10S
3/8" = 1'-0"




## DETAIL 2/10S
NO SCALE




## DETAIL 3/10S




## DETAIL 4/10S
1 1/2" = 1'-0"




## SECTION E/10S




## SECTION B/10S
3/16" = 1'-0"

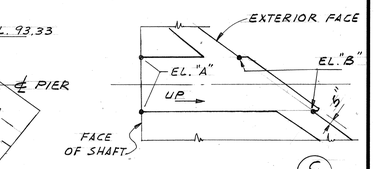


## SECTION C/10S




## DETAIL 1/10S
1/4" = 1'-0"

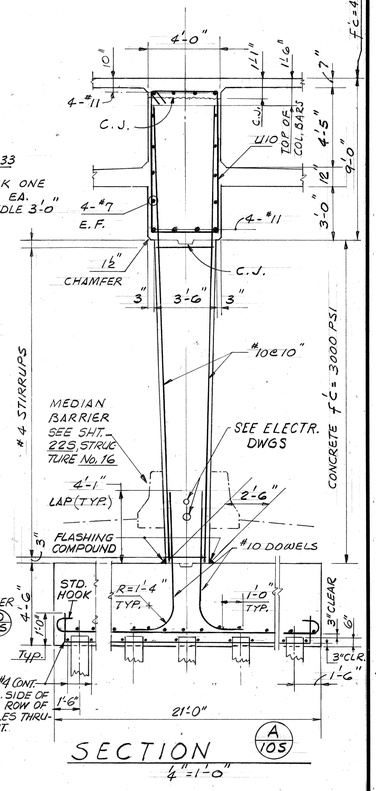


## SECTION A/10S
1/4" = 1'-0"

THIS WORK WAS PREPARED BY ME OR UNDER MY SUPERVISION.
William J. Armento

WILLIAM J. ARMENTO
REGISTERED PROFESSIONAL ENGINEER
No. 1943
HAWAII, U.S.A.

STATE OF HAWAII
DEPARTMENT OF TRANSPORTATION
HIGHWAYS DIVISION

HALAWA INTERCHANGE
STRUCTURE NO. 4

MOANALUA FREEWAY OVER H-3

EASTBOUND PIER

PROJ. No. I-H1-1(89):13 DATE: MAY 1971

SHEET No. 10S OF 19S SHEETS

| ORIGINAL PLAN | | DATE |
|---|---|---|
| | SURVEY PLOTTED BY | |
| | DRAWN BY | |
| | TRACED BY | |
| | DESIGNED BY | |
| NOTE BOOK | QUANTITIES BY | |
| No. | CHECKED BY | |

191

| FED. ROAD DIST. NO. | STATE | FED. AID PROJ. NO. | FISCAL YEAR | SHEET NO. | TOTAL SHEETS |
|---|---|---|---|---|---|
| HAWAII | HAW. | I-H1-1(89):13 | 1971 | 192 | 362 |

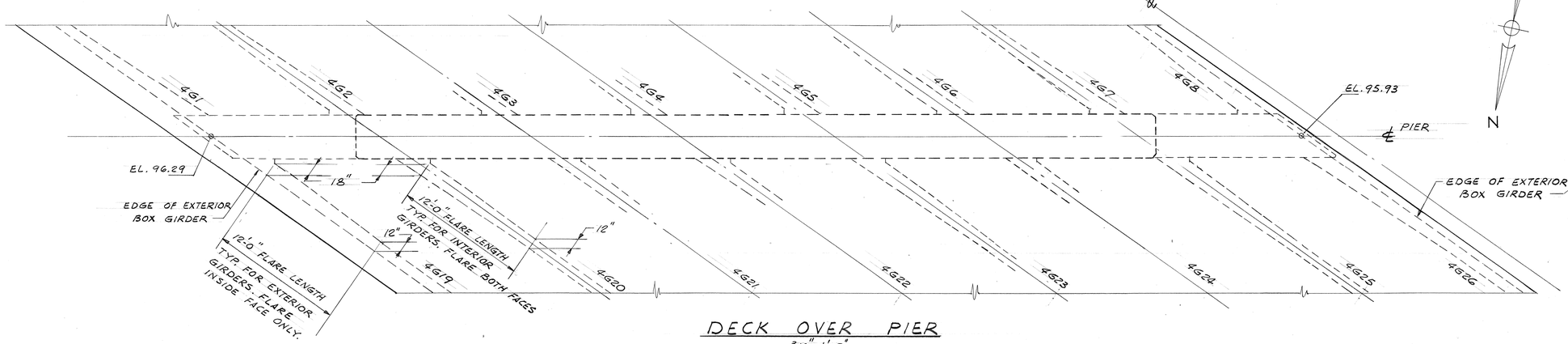


DECK OVER PIER
3/16" = 1'-0"

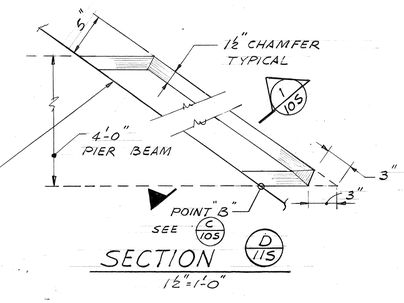


SECTION
1½" = 1'-0"

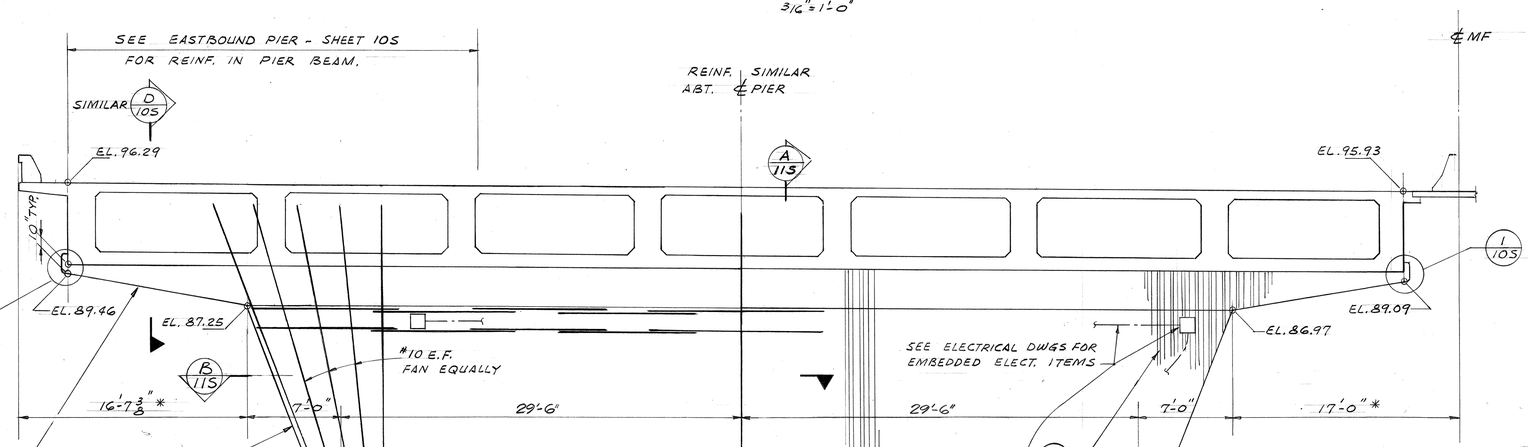


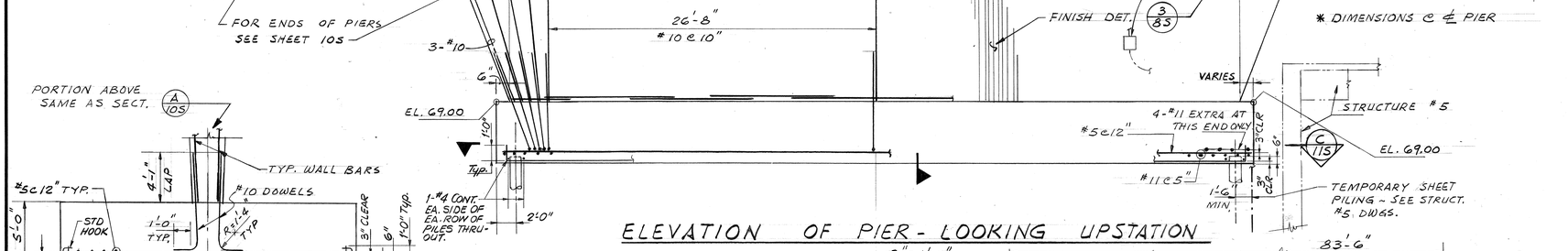


ELEVATION OF PIER - LOOKING UPSTATION
3/16" = 1'-0"

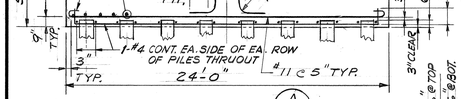


SECTION A/11S
3/16" = 1'-0"

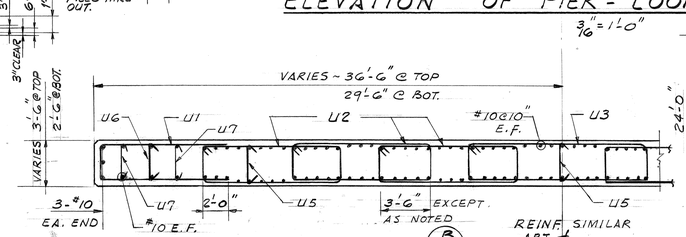


SECTION B/11S

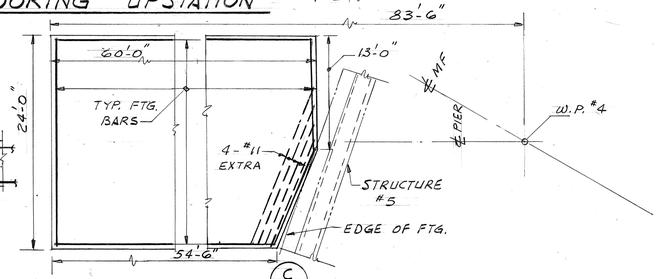


SECTION C/11S

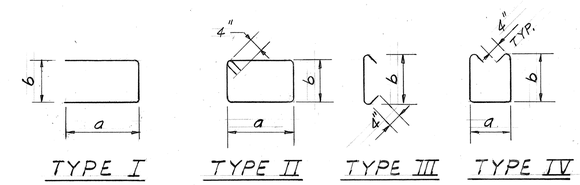


## STIRRUP SCHEDULE

| BAR MARK | TYPE | SIZE & SPACING | DIMENSIONS a | b | c | d | e | REMARKS |
|---|---|---|---|---|---|---|---|---|
| U1 | I | #4 @ 12" | VARIES | VARIES | | | | |
| U2 | II | #4 @ 12" | 10'-2" | VARIES | | | | |
| U3 | II | #4 @ 12" | 13'-6" | VARIES | | | | |
| U4 | II | #4 @ 12" | 10'-0" | VARIES | | | | |
| U5 | III | #4 @ 12" | — | VARIES | | | | |
| U6 | III | #4 @ 12" | — | | | | | TOP 12'-0" ONLY |
| U7 | III | #4 @ 12" | — | VARIES | | | | TOP 5'-0" ONLY |
| U8 | IV | #6 @ 8" | SEE D/10S | | | | | HOOK IN FIELD |
| U9 | IV | #6 @ 8" | SEE D/10S | | | | | HOOK IN FIELD |
| U10 | II | #6 @ 10" | SEE A/10S | | | | | |

THIS WORK WAS PREPARED BY ME OR UNDER MY SUPERVISION.
William J. Armento

WILLIAM J. ARMENTO REGISTERED PROFESSIONAL ENGINEER No. 1943 HAWAII, U.S.A.

STATE OF HAWAII
DEPARTMENT OF TRANSPORTATION
HIGHWAYS DIVISION

HALAWA INTERCHANGE
STRUCTURE NO. 4

MOANALUA FREEWAY OVER H-3

WESTBOUND PIER

PROJ. No. I-H1-1(89):13 DATE: MAY 1971

SHEET No. 11S OF 19S SHEETS

192

| | | DATE |
|---|---|---|
| ORIGINAL PLAN | SURVEY PLOTTED BY | |
| | TRACED BY | |
| | DESIGNED BY | |
| NOTE BOOK | QUANTITIES BY | |
| No. | CHECKED BY | |

192

| FED. ROAD DIST. NO. | STATE | FED. AID PROJ. NO. | FISCAL YEAR | SHEET NO. | TOTAL SHEETS |
|---|---|---|---|---|---|
| HAWAII | HAW. | I-H1-1(89):13 | 1971 | 193 | 362 |

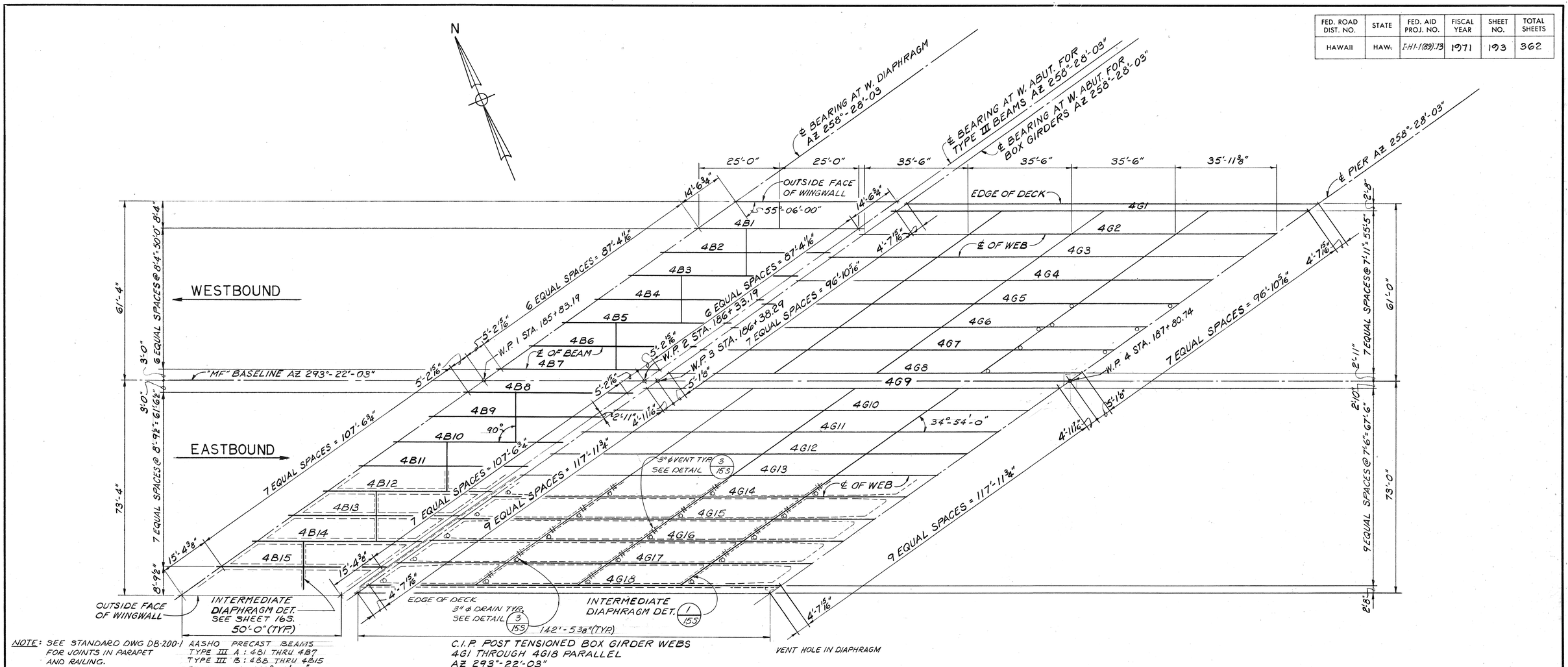


NOTE: SEE STANDARD DWG DB-200-1 FOR JOINTS IN PARAPET AND RAILING.

AASHO PRECAST BEAMS
TYPE III A : 4B1 THRU 4B7
TYPE III B : 4B8 THRU 4B15
PARALLEL AZ 293°-22'-03"
SEE SHEET 16S

## WEST FRAMING PLAN

SCALE: 1/16" = 1'-0"

NOTE:

FORMS SUPPORTING THE CONCRETE TOP SLAB OF BOX GIRDER IF LEFT IN PLACE, SHALL BE SUCH THAT THEY OFFER MINIMUM RESISTANCE TO POST TENSIONING OPERATION.

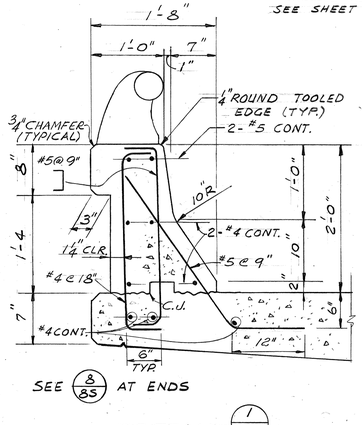


## DETAIL 1/12S

SCALE: 1" = 1'-0"

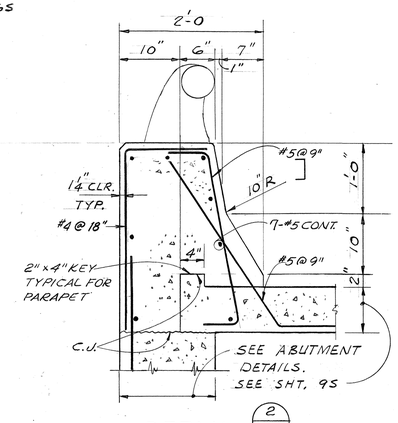


## DETAIL 2/12S

SCALE: 1" = 1'-0"

| ORIGINAL PLAN | | DATE |
|---|---|---|
| | SURVEY PLOTTED BY | 5/4/62 |
| | DRAWN BY | " " " |
| | TRACED BY | " " " |
| NOTE BOOK | DESIGNED BY | 5/19/70 |
| | QUANTITIES BY | " " " |
| No. | CHECKED BY | 5/21/70 |

THIS WORK WAS PREPARED BY ME OR UNDER MY SUPERVISION.

William J. Armento

WILLIAM J. ARMENTO REGISTERED PROFESSIONAL ENGINEER No. 1943 HAWAII, U.S.A.

STATE OF HAWAII
DEPARTMENT OF TRANSPORTATION
HIGHWAYS DIVISION

HALAWA INTERCHANGE
STRUCTURE NO. 4

MOANALUA FREEWAY OVER H-3

WEST FRAMING PLAN

PROJ. No. I-H1-1(89):13 DATE: MAY 1971

SHEET No. 12S OF 19S SHEETS

193

| FED. ROAD DIST. NO. | STATE | FED. AID PROJ. NO. | FISCAL YEAR | SHEET NO. | TOTAL SHEETS |
|---|---|---|---|---|---|
| HAWAII | HAW. | I-H1-1(89):13 | 1971 | 194 | 362 |

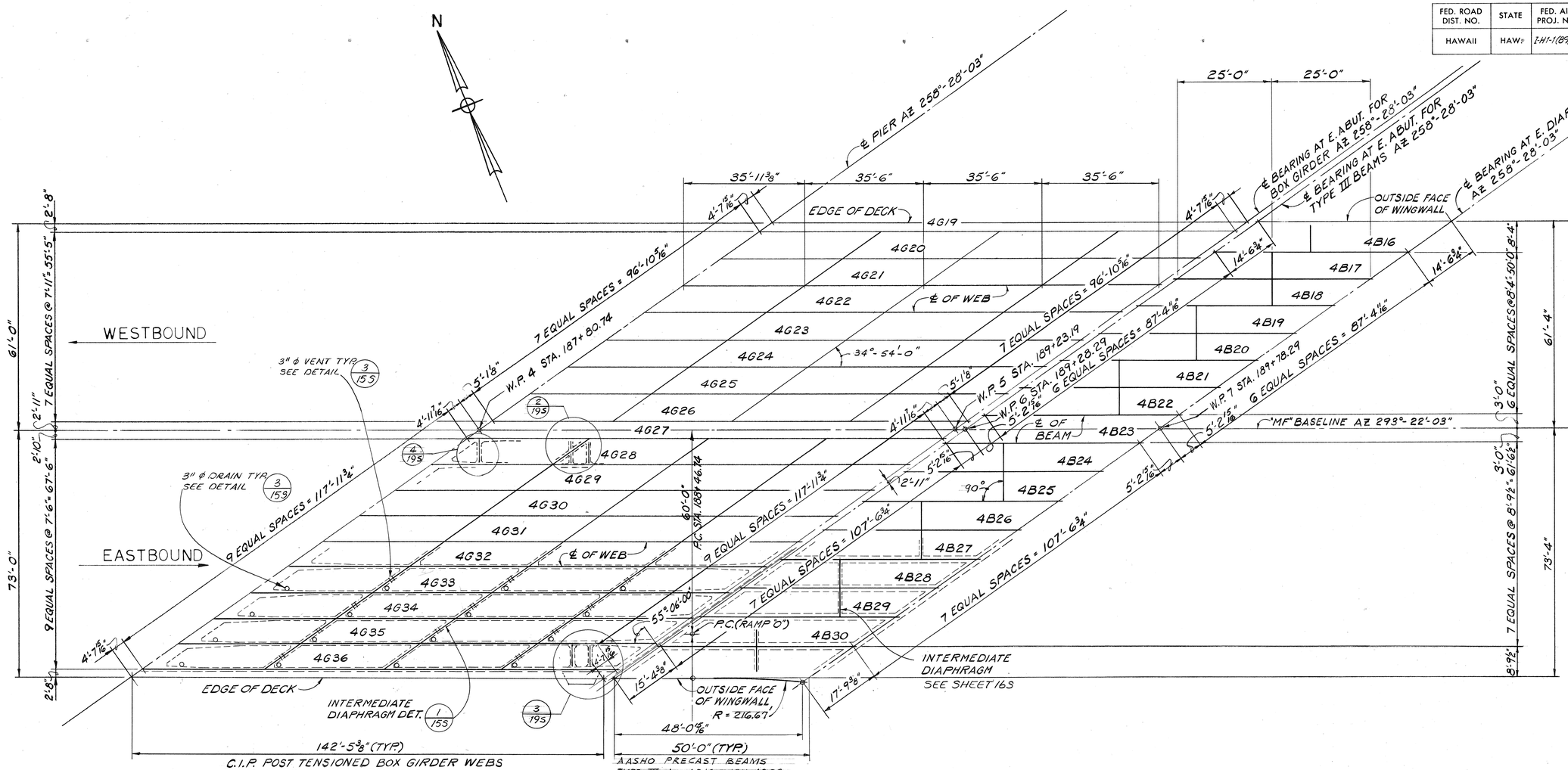


C.I.P. POST TENSIONED BOX GIRDER WEBS
4G19 THROUGH 4G36 PARALLEL
AZ 293°-22'-03"

AASHO PRECAST BEAMS
TYPE III A : 4B16 THRU 4B22
TYPE III B : 4B23 THRU 4B30
PARALLEL AZ 293°-22'-03". SEE SHEET 16S

## EAST FRAMING PLAN

SCALE: 1/16" = 1'-0"

NOTES:

1. POUR #2 SHALL BE MADE AFTER COMPLETION OF POUR #1 ON BOTH ENDS. POUR #2 MAY BE PLACED WITH POURS #1 WHEN APPROVED BY THE ENGINEER, PROVIDED THAT THE POUR #1 SECTIONS ADJOINING THE POUR #2 SECTIONS ARE PLACED IN THIS POUR AND THAT INITIAL SET OF POUR #2 BE RETARDED UNTIL COMPLETION OF BOTH POURS #1.
2. ALL REINF. IN SLABS, GIRDER WEBS & DIAPHRAGMS SHALL BE CONTINUOUS ACROSS CONSTRUCTION JOINTS. (C.J.)
3. SLAB C.J. PARALLEL TO PIER ℄
4. GIRDER WEB C.J. NORMAL TO GIRDER ℄.
5. SLAB C.J. SHALL BE SIMILAR TO DETAIL 5/8S
6. CONSTRUCTION JOINTS ARE OPTIONAL.

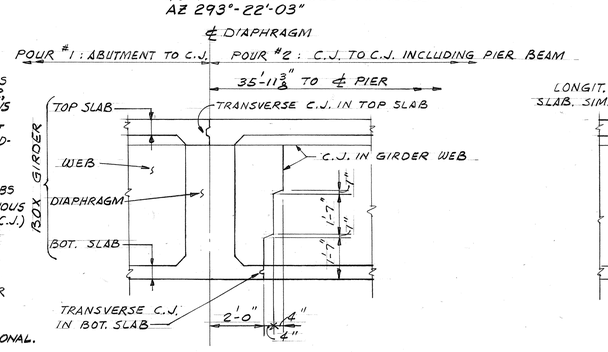


## DETAIL 1/13S

ELEVATION OF TYPICAL TRANSVERSE C.J.

3/8" = 1'-0"

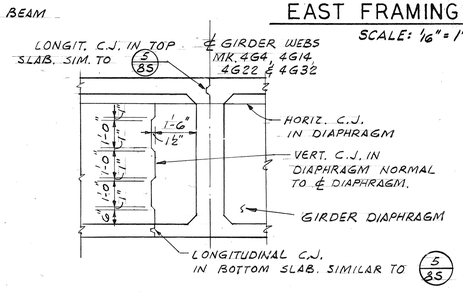


## DETAIL 2/13S

ELEVATION OF TYPICAL LONGITUDINAL C.J.

3/8" = 1'-0"

| ORIGINAL PLAN | | DATE |
|---|---|---|
| | SURVEY PLOTTED BY | 7/14/70 |
| | DRAWN BY | " " " " |
| | TRACED BY | 1/13/71 |
| NOTE BOOK | DESIGNED BY | 7/14/70 |
| No. | QUANTITIES BY | |
| | CHECKED BY | |

THIS WORK WAS PREPARED BY ME OR UNDER MY SUPERVISION.

Wm J. Armento

WILLIAM J. ARMENTO
REGISTERED PROFESSIONAL ENGINEER
No. 1943
HAWAII, U.S.A.

STATE OF HAWAII
DEPARTMENT OF TRANSPORTATION
HIGHWAYS DIVISION

HALAWA INTERCHANGE STRUCTURE NO. 4

MOANALUA FREEWAY OVER H-3

EAST FRAMING PLAN

PROJ. No. I-H1-1(89):13 DATE: MAY 1971

SHEET No. 13S OF 19S SHEETS

194

| FED. ROAD DIST. NO. | STATE | FED. AID PROJ. NO. | FISCAL YEAR | SHEET NO. | TOTAL SHEETS |
|---|---|---|---|---|---|
| HAWAII | HAW. | I-H1-1(89):13 | 1971 | 195 | 362 |

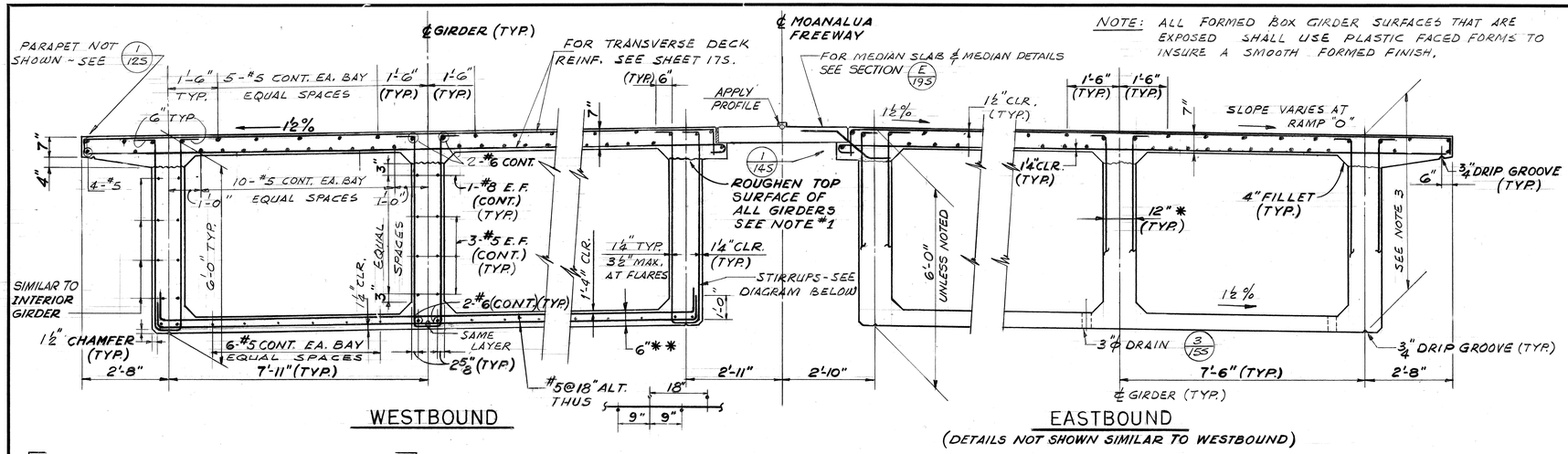


* WEB THICKNESS VARIES AT ABUTMENT AND PIER. SEE SHEET Nos 10S, 11S & 15S
** SOFFIT THICKNESS VARIES AT PIER. SEE DIAGRAM THIS SHEET.

## TYPICAL NORMAL BOX GIRDER SECTION

(LOOKING UPSTATION)
SCALE: ½"=1'-0"

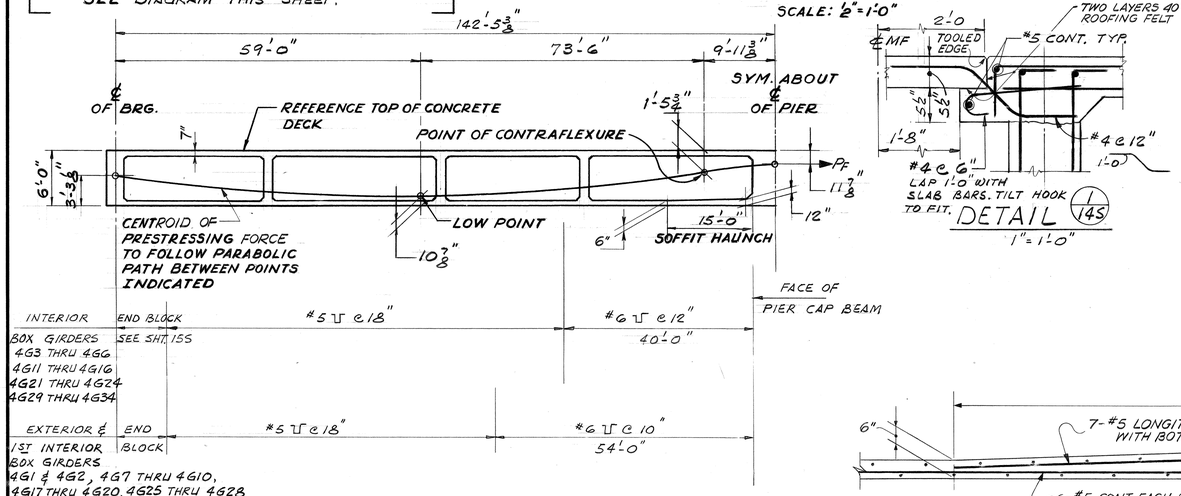


## PRESTRESSING PATH & STIRRUP SPACING

NO SCALE




## NOTES

1. THE ENTIRE SURFACE OF THE JOINT SHALL BE THOROUGHLY CLEANED OF SURFACE LAITANCE, CURING COMPOUND, AND OTHER MATERIAL FOREIGN TO THE CONCRETE, UNTIL CLEAN AGGREGATE IS EXPOSED. USE ABRASIVE BLAST CLEANING AFTER THE CURING PERIOD OR IMMEDIATELY BEFORE PLACING CONCRETE AT THE JOINT
2. FOR TOP SLAB TRANSVERSE REINFORCEMENT SEE SHEET 17S.
3. FOR GIRDERS 4G34 4G35 & 4G36 THE OVERALL DEPTH IS REDUCED BY THE INCREASED CROSS SLOPE UNDER RAMP O. SEE SHEET 2S.

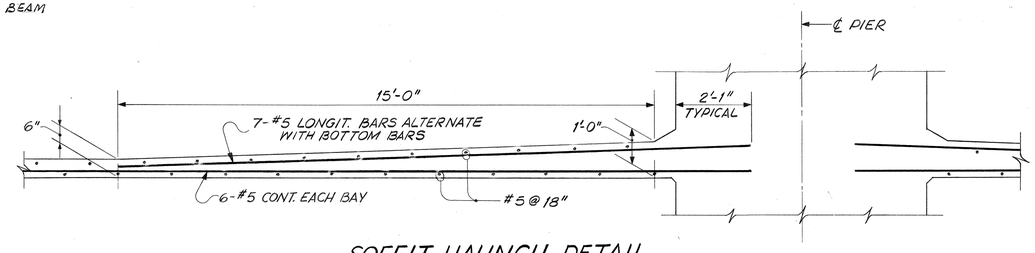


## SOFFIT HAUNCH DETAIL

½"=1'-0"

## PRESTRESSING NOTES

1. THE TOTAL FINAL PRESTRESSING FORCE, $P_F$, AT THE CENTERLINE OF PIER SHALL BE AS FOLLOWS, AFTER ALL LOSSES HAVE OCCURED:
   EASTBOUND ROADWAY = 1740 K/GIRDER x 10 GIRDERS = 17,400 K
   WESTBOUND ROADWAY = 1740 K/GIRDER x 8 GIRDERS = 13,920 K
   THE PRESTRESSING FORCE FOR EACH ROADWAY SHALL BE EQUALLY DISTRIBUTED IN ALL THE WEBS OF THE BOX GIRDER SUPPORTING THE ROADWAY. THE INITIAL JACKING FORCE SHALL BE DETERMINED MAKING ALLOWANCE FOR LOSSES DUE TO FRICTION, WOBBLE AND SEATING SLIP AS LISTED BELOW UNDER "DESIGN" AND FOR ALL OTHER CAUSES IN ACCORDANCE WITH THE AASHO STANDARD SPECIFICATIONS. THE STRESS IN THE PRESTRESSING STEEL, AFTER SEATING OF THE ANCHOR, SHALL NOT AT ANY LOCATION EXCEED 0.70f's. IT SHALL NOT EXCEED 0.60f's AFTER ALL LOSSES HAVE OCCURED.
2. EACH TENDON MUST BE SIMULTANEOUSLY JACKED FROM EACH END.
3. THE METALLIC ENCLOSURES AROUND THE TENDONS SHALL BE GALVANIZED RIGID DUCTS.
4. THE CONTRACTOR SHALL JACK THE TENDONS IN EACH WEB IN SUCH A MANNER THAT NO MORE THAN A DIFFERENTIAL OF ONE-THIRD OF THE PRESTRESSING FORCE IN ANY WEB EXISTS BETWEEN ADJACENT WEBS AND AT NO TIME DURING THE STRESSING OPERATION MAY MORE THAN ONE-SIXTH OF THE TOTAL PRESTRESSING FORCE BE APPLIED ECCENTRICALLY ABOUT THE LONGITUDINAL CENTERLINE OF EACH ROADWAY.
5. THE QUANTITY OF PRESTRESSING STEEL REQUIRED FOR POST-TENSIONING SHALL BE COMPUTED ON THE BASIS THAT THE MAXIMUM TENSILE STRESS IN THE PRESTRESSING STEEL AT THE JACKING END SHALL NOT EXCEED 70 PERCENT OF THE SPECIFIED MINIMUM ULTIMATE TENSILE STRENGTH OF THE PRESTRESSING STEEL.
6. THE CONTRACTOR SHALL SUBMIT FOR APPROVAL, ELONGATION AND JACKING COMPUTATIONS, BASED ON THE COEFFICIENT OF FRICTION AND WOBBLE AS LISTED BELOW.
7. DESIGN
   A. THE MINIMUM CYLINDER STRENGTH IN THE CONCRETE AT THE TIME OF PRESTRESSING SHALL BE 4000 PSI. THE MINIMUM 28 DAY STRENGTH OF THE CONCRETE IN THE BOX GIRDER SHALL BE 4500 PSI.
   B. THE HORIZONTAL CLEARANCE BETWEEN UNITS SHALL BE 2½" MINIMUM.
   THE UNITS MAY BE BUNDLED VERTICALLY IN GROUPS OF 3 MAXIMUM EXCEPT IN THE OUTER THIRD OF EACH SPAN ADJACENT TO THE ANCHORAGE. VERTICAL CLEARANCE BETWEEN THE BUNDLED UNITS SHALL BE 3" MINIMUM.
   C. SEATING LOSS OR SLIPPAGE AT THE ANCHORAGES SHALL NOT EXCEED 1/2 INCH.
   D. GIRDERS SHALL BE FLARED AS NECESSARY NEAR THE ANCHORAGE TO PROVIDE A MINIMUM OF 2" CONCRETE COVERING THE DUCTS. ONLY THE INTERIOR FACE MAY BE FLARED ON THE EXTERIOR GIRDER WEBS. WHERE INDIVIDUAL UNITS ARE FLARED HORIZONTALLY, THEY SHALL BE TIED TOGETHER AT THE POINT OF FLARE. BAR REINFORCEMENT THAT INTERFERES WITH THE PRESTRESSING TENDON ALIGNMENT MAY BE ADJUSTED AS DIRECTED BY THE ENGINEER.
   E. FOR THE DESIGN OF THE JACKING FORCE THE COEFFICIENT OF FRICTION "μ" IS TO BE ASSUMED EQUAL TO 0.25 AND THE WOBBLE COEFFICIENT "k" IS TO BE ASSUMED EQUAL TO 0.0002. THESE FIGURES SHALL BE VERIFIED IN THE FIELD BY FRICTION TESTS AS DIRECTED BY THE ENGINEER. HOWEVER THESE FIGURES SHALL BE USED AS A LOWER LIMIT REGARDLESS OF FIELD MEASUREMENT.

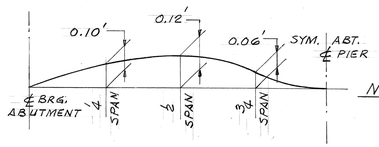


## CAMBER DIAGRAM

NO SCALE

NOTE:
THEORETICAL DOWNWARD DEAD LOAD DEFLECTION PLUS UPWARD PRESTRESS DEFLECTION SUM IS ZERO, HENCE AN UPWARD CAMBER INDICATED IN DIAGRAM WILL BE BUILT-IN TO THE GIRDER FOR ARCHITECTURAL REASON ONLY.

| ORIGINAL PLAN | SURVEY PLOTTED BY | DATE |
|---|---|---|
| | SURVEY BY | |
| | TRACED BY | |
| NOTE BOOK | DESIGNED BY | |
| | QUANTITIES BY | |
| No. | CHECKED BY | |

THIS WORK WAS PREPARED BY ME OR UNDER MY SUPERVISION.
Wm. J. Armento

WILLIAM J. ARMENTO REGISTERED PROFESSIONAL ENGINEER No. 1943 HAWAII

STATE OF HAWAII
DEPARTMENT OF TRANSPORTATION
HIGHWAYS DIVISION

HALAWA INTERCHANGE
STRUCTURE NO. 4
MOANALUA FREEWAY OVER H-3

BOX GIRDER DETAILS

PROJ. No. I-H1-1(89):13 DATE: MAY 1971

SHEET No. 14S OF 19S SHEETS

195

| FED. ROAD DIST. NO. | STATE | FED. AID PROJ. NO. | FISCAL YEAR | SHEET NO. | TOTAL SHEETS |
|---|---|---|---|---|---|
| HAWAII | HAW. | I-H1-1(89):13 | 1971 | 196 | 362 |

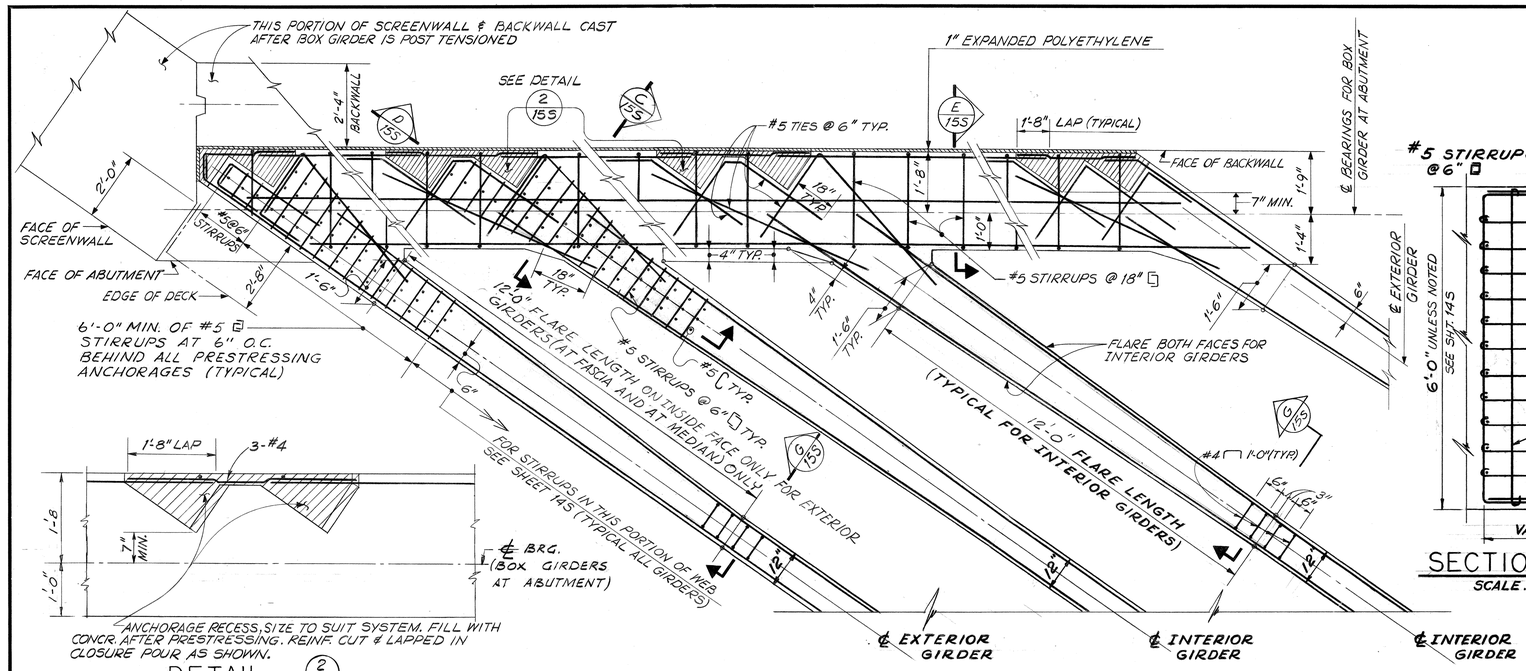


PLAN OF END OF BOX GIRDERS AT ABUTMENTS

SCALE: 1/2" = 1'-0"




DETAIL 2/15S

SCALE: 3/4" = 1'-0"

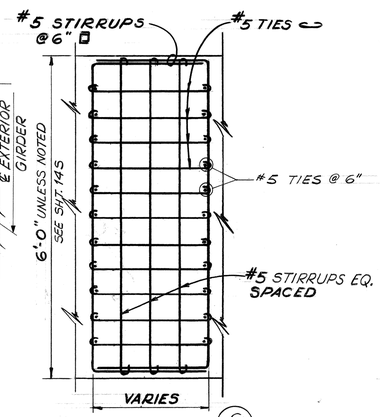


SECTION C/15S

SCALE: 3/4" = 1'-0"

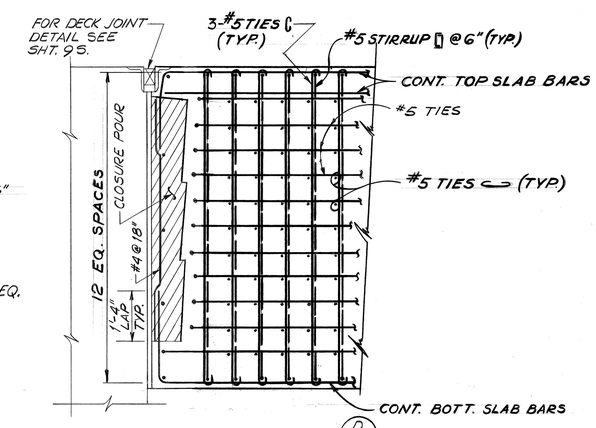


SECTION D/15S

SCALE: 3/4" = 1'-0"

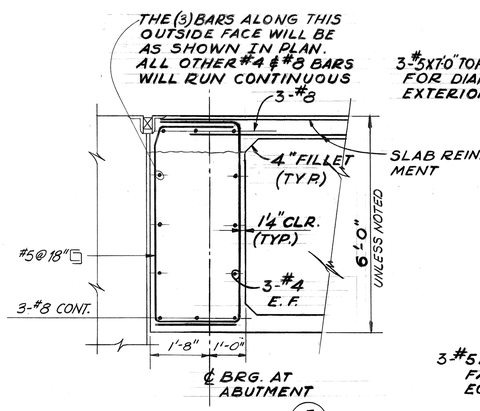


SECTION E/15S

SCALE: 1/2" = 1'-0"

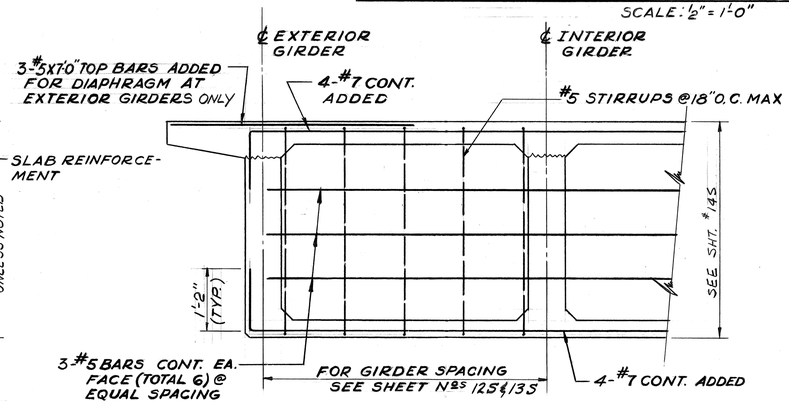


SECTION A/15S

SCALE: 1/2" = 1'-0"

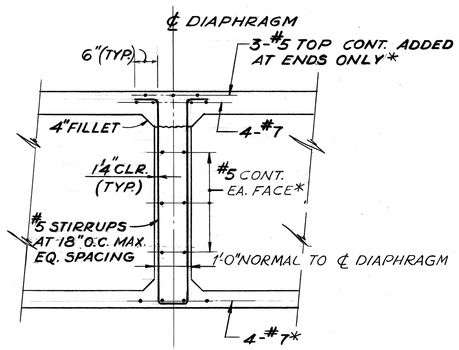


* BARS PLACED PARALLEL TO ℄ DIAPHRAGM

SECTION B/15S

SCALE: 1/2" = 1'-0"

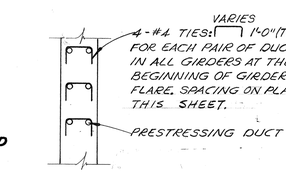


SECTION G/15S

SCALE: NONE

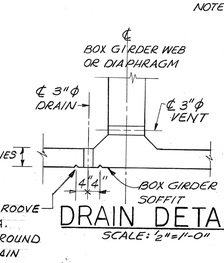


DRAIN DETAIL 3/15S

SCALE: 1/2" = 1'-0"

NOTE: DRAINS & VENTS TO BE MADE OF 3" ϕ NON-RUSTING MATERIAL. ONE DRAIN TO BE BUILT IN EACH SECTION OF BOX GIRDER SOFFIT BORDERED BY WEBS & DIAPHRAGMS. ONE VENT EACH DIAPHRAGM SECTION, DRAIN AT LOW POINT. AT PIER, DRAINS TO BE LOCATED 1'-6" AWAY FROM FACE OF PIER CAP BEAM.

NOTE (A)

AN ALLOWANCE OF 1¼" FOR CREEP, SHRINKAGE AND ELASTIC DEFORMATIONS OF THE BOX GIRDER CONCRETE HAS BEEN MADE ON DETAIL 2/15S. A SIMILAR ALLOWANCE SHALL BE MADE IN PLACING THE FORM WORK FOR THE ENDS OF THE BOX GIRDER AT THE ABUTMENTS.

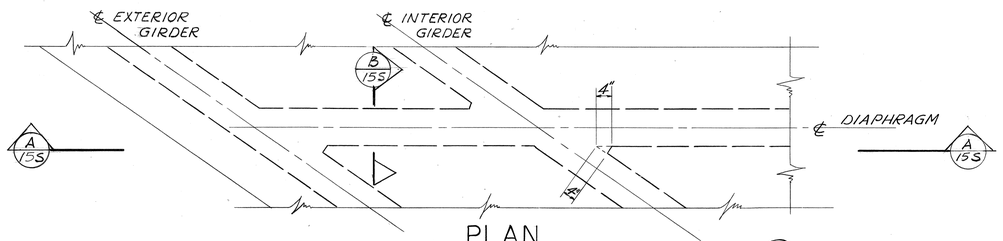


PLAN

INTERIOR DIAPHRAGM TYPICAL DETAILS 1/15S

SCALE: 1/2" = 1'-0"

| ORIGINAL PLAN | | |
|---|---|---|
| | SHEET PLOTTED BY | |
| | TRACED BY | |
| | DESIGNED BY | |
| NOTE BOOK | QUANTITIES BY | |
| | CHECKED BY | |
| No. | | |

| | DATE |
|---|---|
| " | 3/23/70 |
| " | 7/27/70 |

THIS WORK WAS PREPARED BY ME OR UNDER MY SUPERVISION.

Wm J. Armento

WILLIAM J. ARMENTO PROFESSIONAL ENGINEER No. 1943 HAWAII, U.S.A.

STATE OF HAWAII
DEPARTMENT OF TRANSPORTATION
HIGHWAYS DIVISION

HALAWA INTERCHANGE
STRUCTURE NO. 4

MOANALUA FREEWAY OVER H-3

BOX GIRDER END DETAILS

PROJ. No. I-H1-1(89):13 DATE: MAY 1971

SHEET No. 15S OF 19S SHEETS

196

| FED. ROAD DIST. NO. | STATE | FED. AID PROJ. NO. | FISCAL YEAR | SHEET NO. | TOTAL SHEETS |
|---|---|---|---|---|---|
| HAWAII | HAW. | I-H1-1(89):13 | 1971 | 197 | 362 |

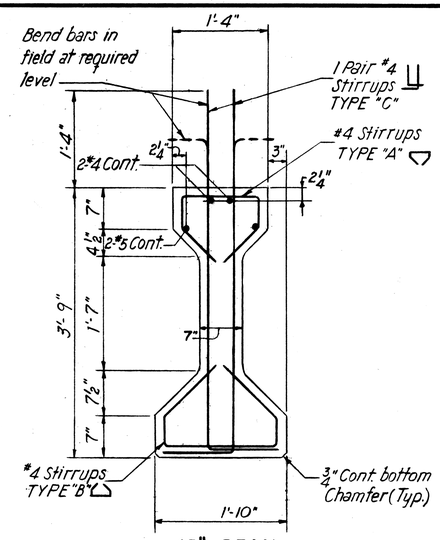


**45" BEAM**
**TYPE III**
1" = 1'-0"

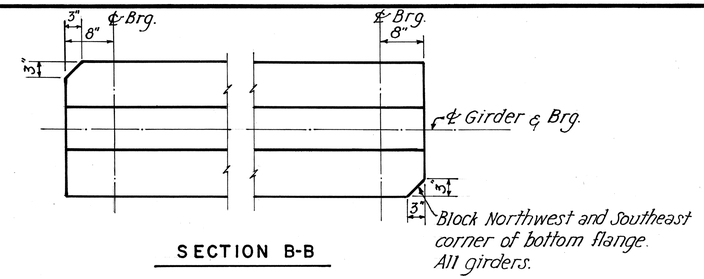


**SECTION B-B**

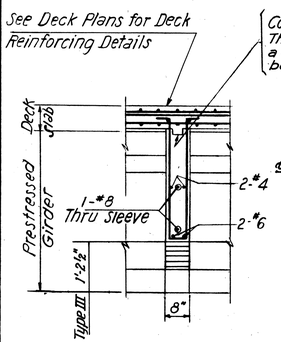


**SECTION A-A**
No Scale

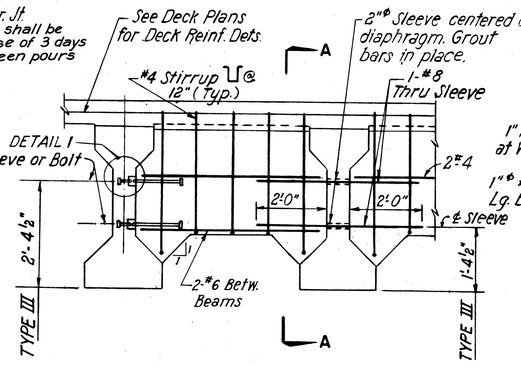


**TYPICAL INTERMEDIATE DIAPHRAGM**
No Scale

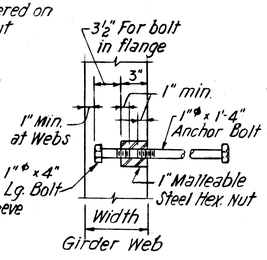


**DETAIL 1**
1½" = 1'-0"

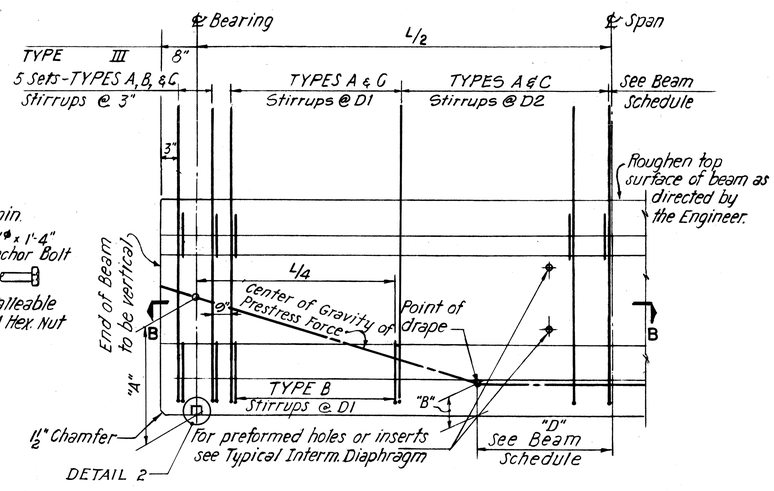


**LONGITUDINAL SECTION**
No Scale

## NOTES FOR PRESTRESSED BEAMS

1. Pretensioned strands shall be 7 wire ½"ϕ stress-relieved steel strands (Area = 0.153 in²) with an ultimate strength of 270 KSI. See Specifications.
   Initial Strand Stress = 189 KSI
   Strand Design Stress = 154 KSI
2. Non-prestressed reinforcing steel shall have a yield strength of 40 KSI.
3. Concrete shall have a 28 day strength of 5500 P.S.I.
4. Values of deflection based upon $E_{beam}$ = 3,800,000 P.S.I.
5. The calculated camber includes the effects of the prestress force and the weight of the beam after removal from bed.
6. The dead load deflection includes the combined effects of the weight of slab, haunch and diaphragm and the superimposed dead loads.
7. Strands on any one line shall be placed symmetrically about ℄ of beam.
8. Strands shall be placed starting on the outside points and shall be uniformly spaced across the beam.
9. Final strand patterns shall be submitted to the Engineer for approval.
10. Bundling of prestressing reinforcement shall comply with the notes and details shown on this drawing.
11. Adjustment of slab haunch for camber shall be determined by the Engineer.
12. Lifting devices, as approved by the Engineer shall be placed close to ℄ bearings. Location to be approved by the Engineer. In no case is a stirrup to be used as a lifting device.
13. See Framing Plans for layout, type, mark numbers, and length of individual girders. See Framing Plan for locations of diaphragms.
14. There shall be no change in the structural capacity of the prestressed girders as shown on the plans.

THIS WORK WAS PREPARED BY ME OR UNDER MY SUPERVISION.
Wm. J. Armento

WILLIAM J. ARMENTO
REGISTERED PROFESSIONAL ENGINEER
No. 1943
HAWAII, U.S.A.

## BEAM SCHEDULE

| BEAM TYPE | WORKING FORCE P F(KIPS) | CALC. CAMBER (INCHES) (SEE NOTE 5) | DEAD LOAD DEFLECTION (IN.) (SEE NOTE 6) | LOCATION OF CENTER OF GRAVITY OF PRESTRESS FORCE: DIST. TO PT. OF DRAPE "D" | DIST. "A" (IN) | DIST. "B" (IN) | STIRRUPS TYPE "A" & "C": NO. OF STIRRUPS AT SPCG. D1 | SPCG. D2 | REQUIRED MIN. ULTIMATE CONC. STRENGTH BEFORE RELEASE OF STRANDS (P.S.I.) | REMARKS |
|---|---|---|---|---|---|---|---|---|---|---|
| III | 424 | ½ | ⅜ | 7'-0" | 11.61 | 6.95 | 16 @ 9" | 18" | 4,000 | |
| | | | | | | | | | | |
| | | | | | | | | | | |
| | | | | | | | | | | |
| | | | | | | | | | | |
| | | | | | | | | | | |
| | | | | | | | | | | |
| | | | | | | | | | | |

## BUNDLING OF PRESTRESSING REINFORCEMENT

### ARRANGEMENT AND CLEARANCE FOR POST TENSIONED UNITS

1. Horizontal clearance between units equals 2" min.
2. Units may be bundled vertically in groups of 3 maximum.
3. Vertical clearance between bundled units equals 3" min.
4. Approval of the Engineer is required for deviation.

### ARRANGEMENT AND CLEARANCE FOR PRETENSIONED STRANDS

1. Strands may be bundled in groups as shown or in groups consisting of a maximum of 6 strands and separated at the ends.
2. The minimum distance "S" between groups or individual strands is 2" for ½" strands.
3. "S" is measured between centers of adjacent strands.
4. Approval of the Engineer is required for deviation.

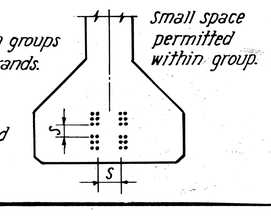


STATE OF HAWAII
**DEPARTMENT OF TRANSPORTATION**
**HIGHWAYS DIVISION**

HALAWA INTERCHANGE STRUCTURE NO. 4

MOANALUA FREEWAY OVER H-3

PRESTRESSED BEAMS

PROJ. No. I-H1-1 (89):13 DATE: MAY 1971

**SHEET No. 165 OF 195 SHEETS**

197

ORIGINAL PLAN | SURVEY PLOTTED BY | DRAWN BY | TRACED BY | DESIGNED BY | NOTE BOOK | QUANTITIES BY | CHECKED BY | DATE 1/5/71

PRINTED ON NO. 1000H CLEARPRINT

| FED. ROAD DIST. NO. | STATE | FED. AID PROJ. NO. | FISCAL YEAR | SHEET NO. | TOTAL SHEETS |
|---|---|---|---|---|---|
| HAWAII | HAW. | I-H1-1(89):13 | 1971 | 198 | 362 |




SECTION (A/17S) & (B/17S)
NO SCALE

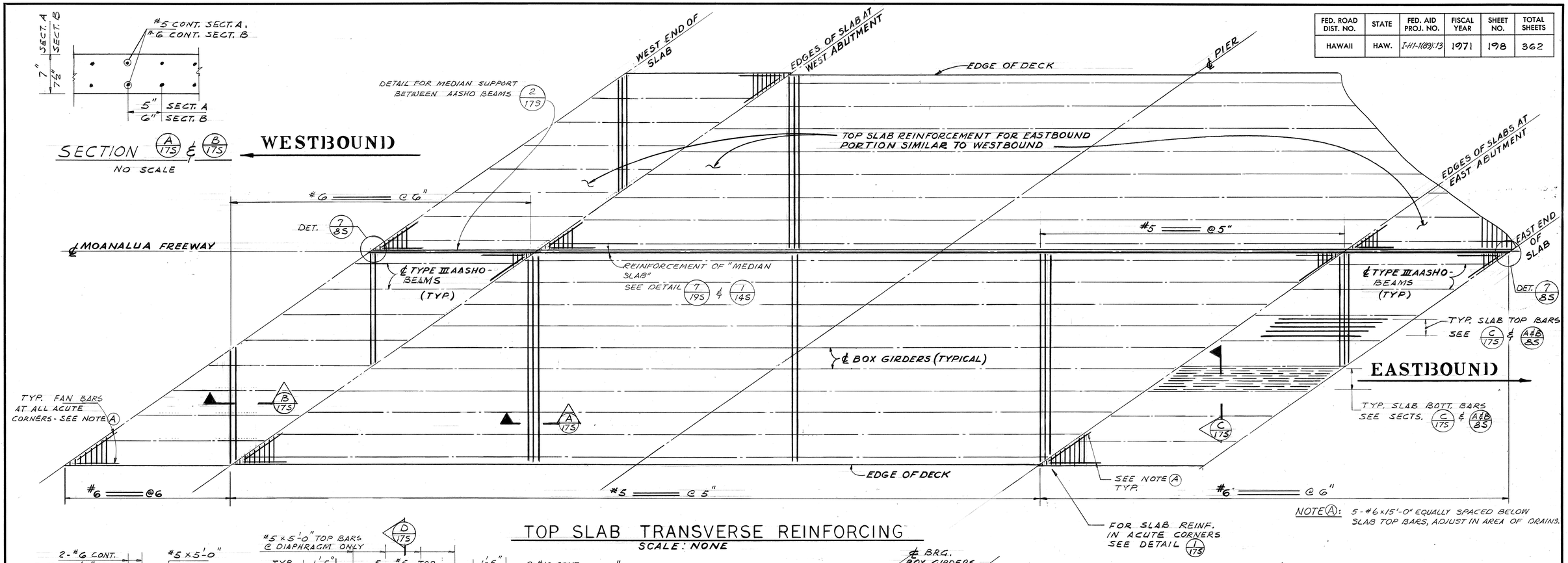


NOTE (A): 5 - #6 x 15'-0" EQUALLY SPACED BELOW SLAB TOP BARS, ADJUST IN AREA OF DRAINS.

## TOP SLAB TRANSVERSE REINFORCING

SCALE: NONE

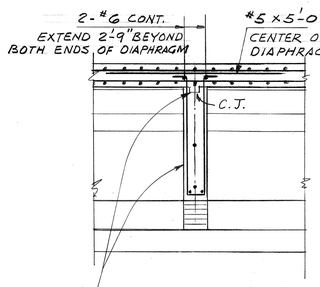


SECTION (D/17S)
½" = 1'-0"

THERE SHALL BE A LAPSE OF A MINIMUM OF 3 (THREE) DAYS BETWEEN POURS.

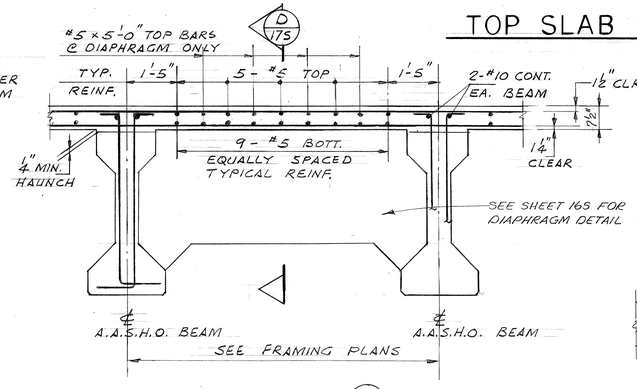


SECTION (C/17S)
N.T.S.

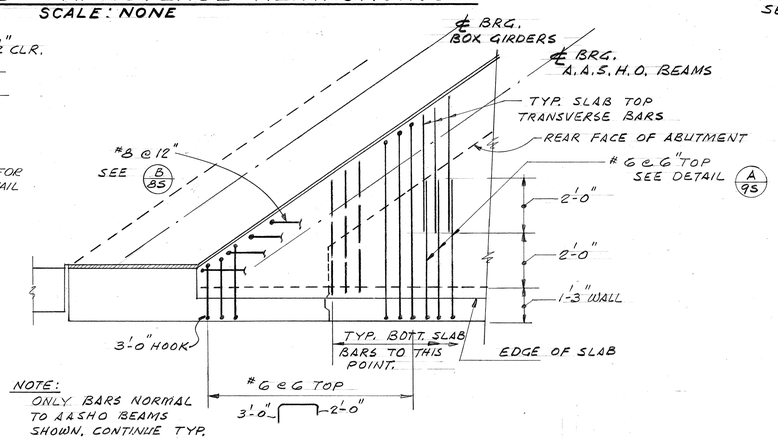


NOTE: ONLY BARS NORMAL TO AASHO BEAMS SHOWN. CONTINUE TYP. REINF. PARALLEL TO AASHO BEAMS INTO CORNER.

DETAIL (1/17S)
⅜" = 1'-0"

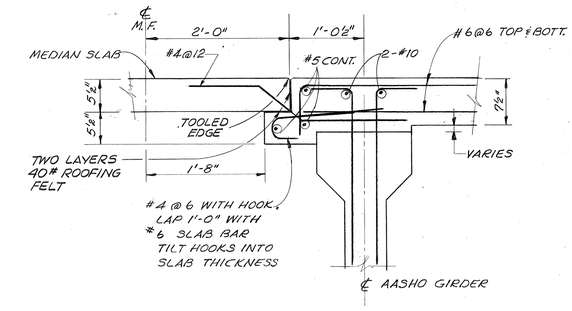


DETAIL (2/17S)
1" = 1'-0"

THIS WORK WAS PREPARED BY ME OR UNDER MY SUPERVISION.
Wm. J. Armento

WILLIAM J. ARMENTO REGISTERED PROFESSIONAL ENGINEER No. 1943 HAWAII, U.S.A.

STATE OF HAWAII
DEPARTMENT OF TRANSPORTATION
HIGHWAYS DIVISION

HALAWA INTERCHANGE
STRUCTURE NO. 4

MOANALUA FREEWAY OVER H-3

SLAB REINFORCING PLAN

PROJ. No. I-H1-1(89):13 DATE: MAY 1971

SHEET No. 17S OF 19S SHEETS

| ORIGINAL PLAN | | DATE |
|---|---|---|
| | SURVEY PLOTTED BY | |
| | DRAWN BY K. Kihara | 2/5/70 |
| | TRACED BY " " | " |
| | DESIGNED BY " " | 1/16/70 |
| NOTE BOOK | QUANTITIES BY " " | " |
| No. | CHECKED BY " " | 1/15/70 |

19S

| FED. ROAD DIST. NO. | STATE | FED. AID PROJ. NO. | FISCAL YEAR | SHEET NO. | TOTAL SHEETS |
|---|---|---|---|---|---|
| HAWAII | HAW. | I-H1-1(89):13 | 1971 | 199 | 362 |

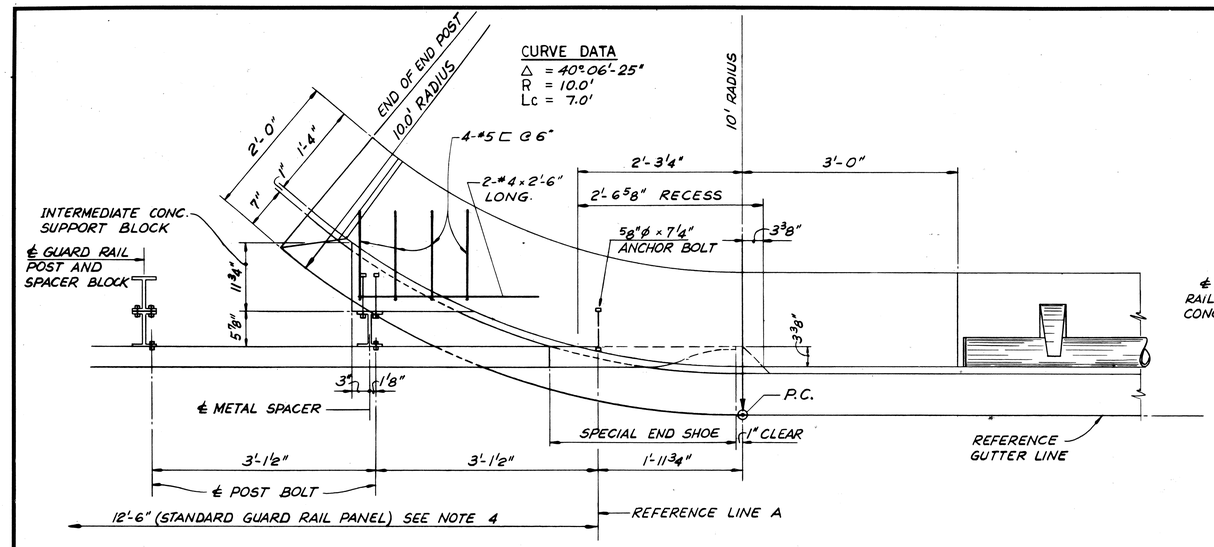


## PLAN

SCALE : 1" = 1'-0"

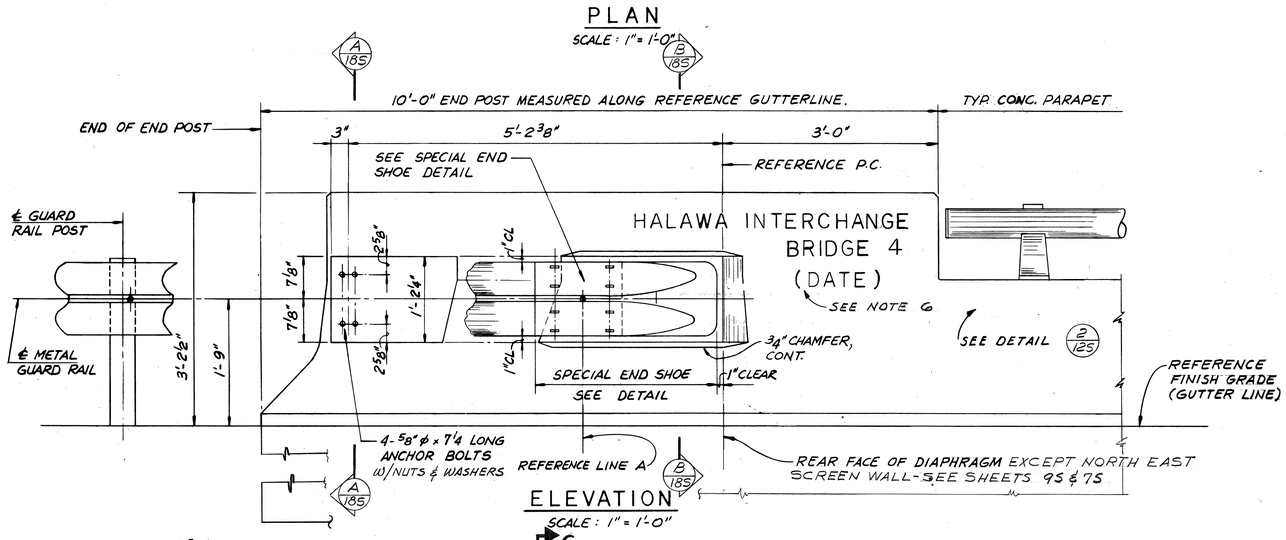


## ELEVATION

SCALE : 1" = 1'-0"

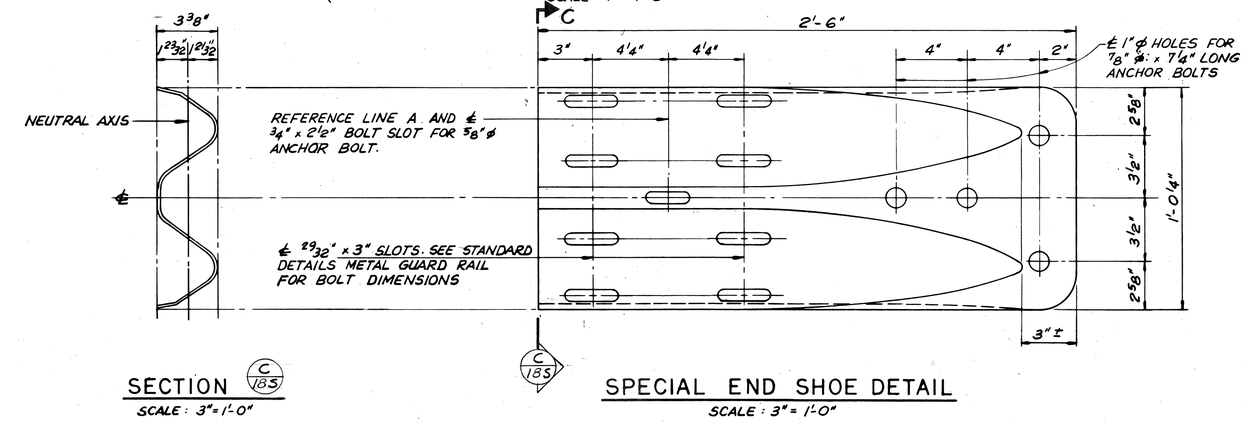


## SECTION C/185

SCALE : 3" = 1'-0"

## SPECIAL END SHOE DETAIL

SCALE : 3" = 1'-0"

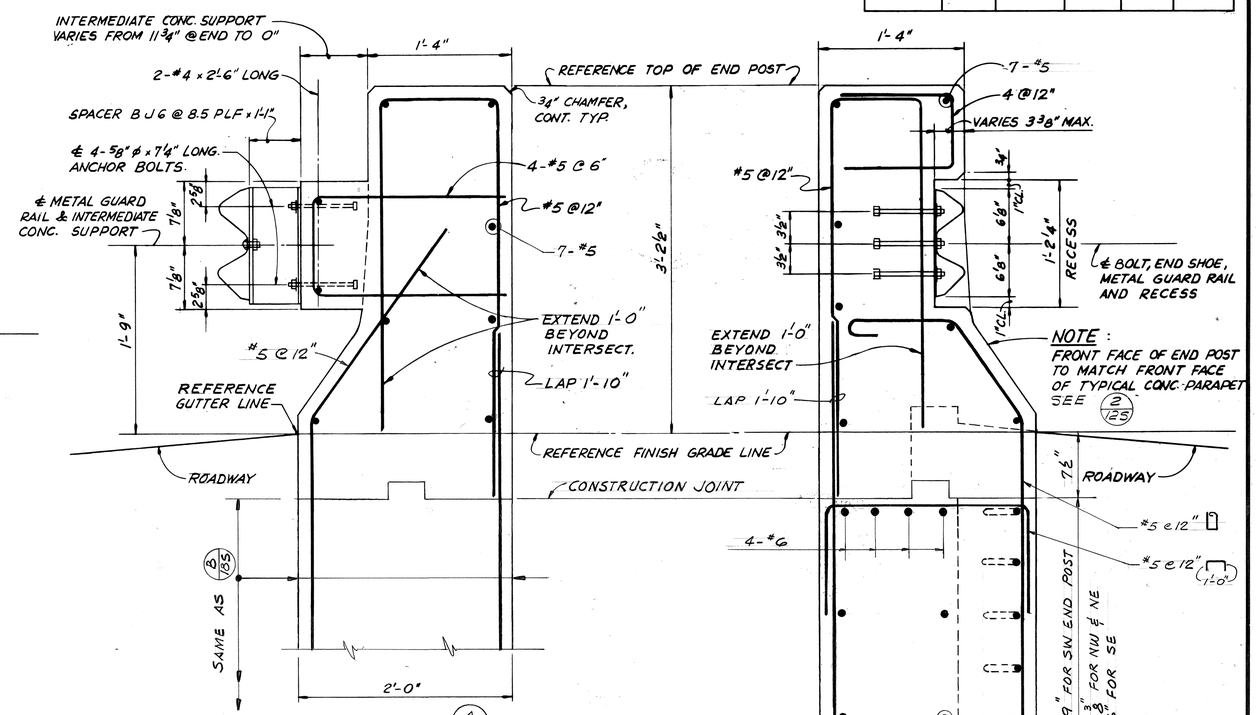


## SECTION A/185

SCALE : 1½" = 1'-0"

## SECTION B/185

SCALE : 1½" = 1'-0"

ALSO SEE DETAILS 1/95 & 2/95

## NOTES :

1.-ALL ANCHOR BOLTS SHALL BE HIGH STRENGTH BOLTS CONFORMING TO THE REQUIREMENTS OF A S T M A-325.

2.-ALL SHOE ASSEMBLY, INCLUDING ANCHOR BOLTS, NUTS AND WASHERS, SHALL BE GALVANIZED.

3.-SPECIAL END SHOE SHALL BE FABRICATED FROM 10 GAGE STEEL CONFORMING TO THE REQUIREMENTS OF AASHO 180.

4.-FIRST GUARD RAIL PANEL ADJOINING "SPECIAL END SHOE" SHALL BE OF GALVANIZED STEEL. SEE SPECIAL PROVISIONS FOR REQUIREMENTS.

5.-ANCHOR BOLT LENGTH GIVEN FROM UNDER BOLT HEAD.

6.-PLACE NAME OF STRUCTURE AS SHOWN. FOR LOCATION, SEE PLAN ON SHEET 1S. DATE SHOWN WILL BE YEAR STRUCTURE IS COMPLETED. LETTER SIZE AND DETAIL SEE STANDARD BRIDGE DETAILS.

| ORIGINAL PLAN | SURVEY PLOTTED BY | DATE |
|---|---|---|
| | DRAWN BY | |
| | TRACED BY | |
| NOTE BOOK | DESIGNED BY | |
| | QUANTITIES BY | |
| No. | CHECKED BY | |

THIS WORK WAS PREPARED BY ME OR UNDER MY SUPERVISION.

Wm. J. Armento

WILLIAM J. ARMENTO
REGISTERED PROFESSIONAL ENGINEER
No. 1943
HAWAII, U.S.A.

STATE OF HAWAII
DEPARTMENT OF TRANSPORTATION
HIGHWAYS DIVISION

HALAWA INTERCHANGE
STRUCTURE NO. 4

MOANALUA FREEWAY OVER H-3

CONC. END POST DETAILS

PROJ. No. I-H1-1(89):13 DATE: MAY 1971

SHEET No. 18S OF 19S SHEETS

199

| FED. ROAD DIST. NO. | STATE | FED. AID PROJ. NO. | FISCAL YEAR | SHEET NO. | TOTAL SHEETS |
|---|---|---|---|---|---|
| HAWAII | HAW. | F-HI-1(89);13 | 1971 | 200 | 362 |

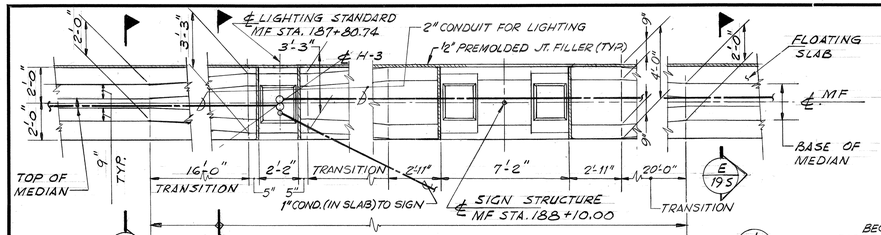


## PLAN OF MEDIAN BARRIER (1/195)

½" = 1'-0"

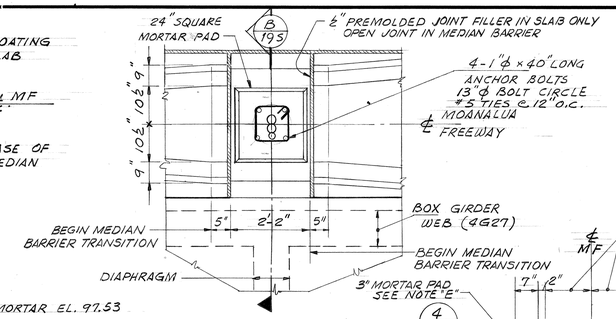


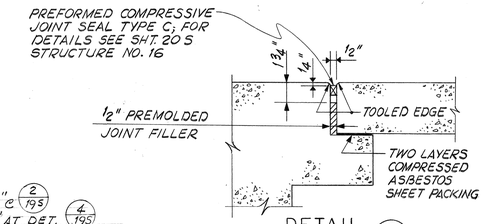


## DETAIL (8/195)

1½" = 1'-0"

### PAYMENT NOTES:

1. PAYMENT FOR "CONCRETE FOR PRESTRESSED CAST-IN-PLACE STRUCTURES" SHALL INCLUDE ALL EMBEDDED ITEMS i.e. ANCHOR BOLTS, PLATES ETC.
2. PAYMENTS FOR "CONCRETE BRIDGE PARAPET, INCLUDING END POST" AND "GUARD RAIL TYPE 4F" SHALL INCLUDE ALL CONCRETE & REINFORCEMENT ABOVE TOP OF BRIDGE DECK, COVER PLATES, COVER PLATE BOLTS & ALL JOINT MATERIALS ASSOCIATED WITH GUARD RAIL & PARAPETS. SEE STANDARD SPECIFICATIONS FOR METHOD OF MEASUREMENT.

**NOTE:**
FOR ADDITIONAL DETAILS OF EMBEDDED ELECTRICAL CONDUIT & OTHER MATERIAL SEE ELECTRICAL DRAWINGS.

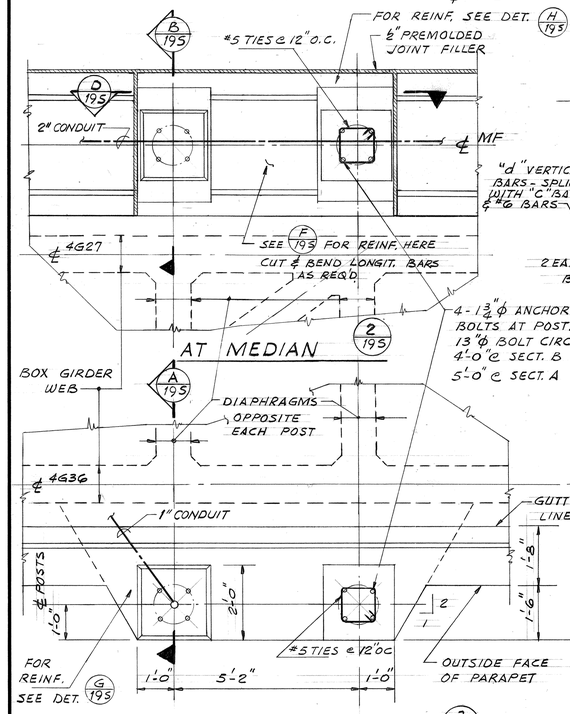


## AT MEDIAN (2/195)

## AT FASCIA GIRDER (3/195)

## PLAN OF SIGN POST SUPPORT

½" = 1'-0"

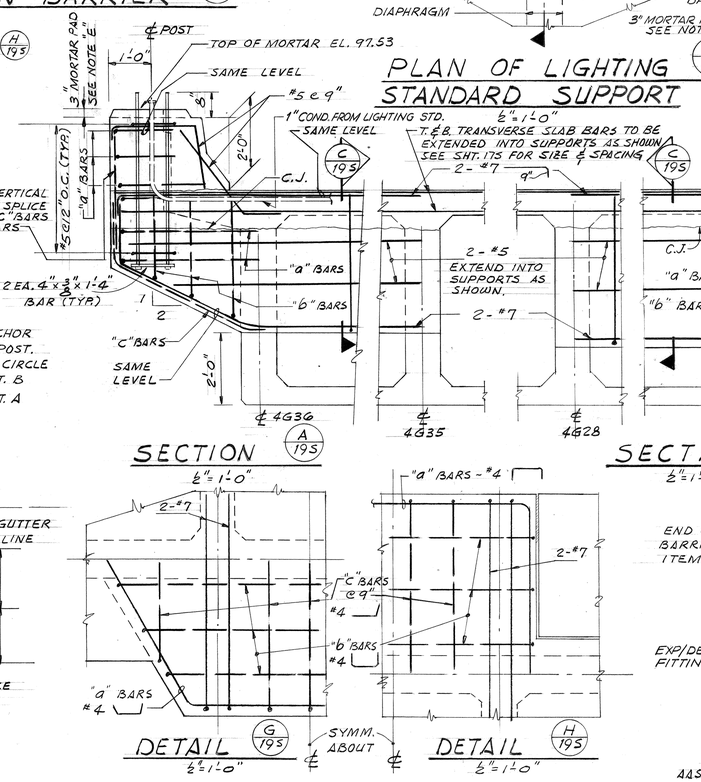


## PLAN OF LIGHTING STANDARD SUPPORT

½" = 1'-0"

## SECTION (A/195)

½" = 1'-0"

## SECTION (B/195)

½" = 1'-0"

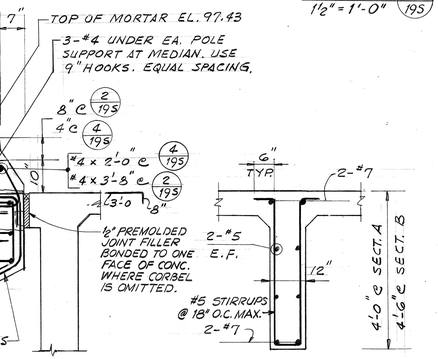


## SECTION (C/195)




## DETAIL (G/195)

½" = 1'-0"

## DETAIL (H/195)

½" = 1'-0"

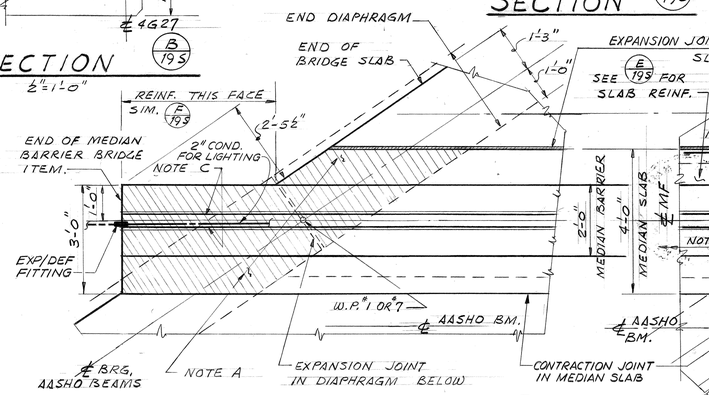


## AT END DIAPHRAGMS (5/195)

(FOR REINFORCING - SEE DET. (7/195))

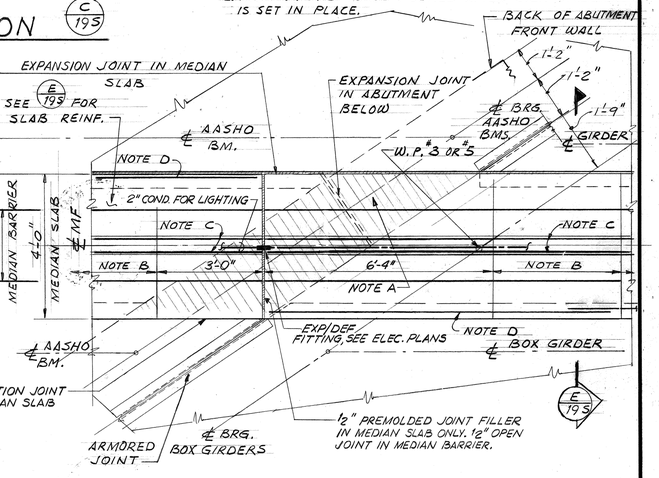


## AT ABUTMENT FRONT WALL (6/195)

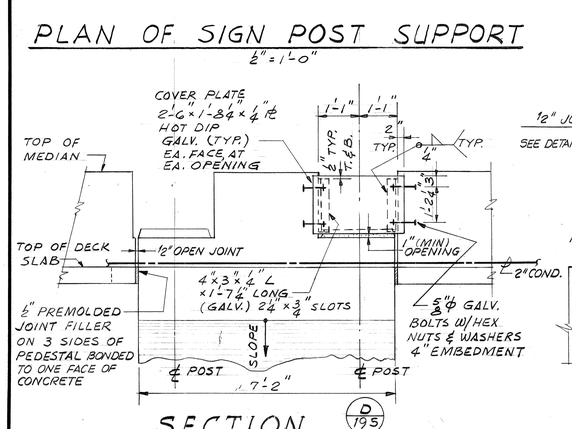


## SECTION (D/195)

NO SCALE

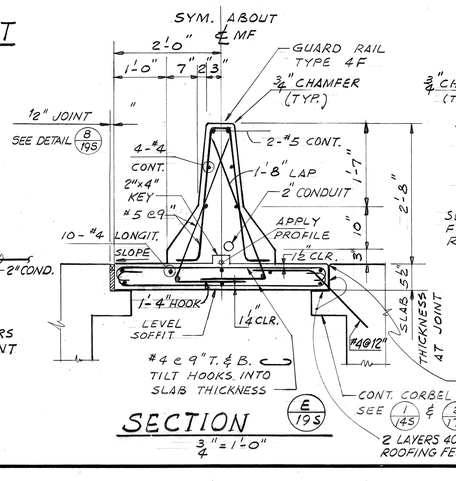


## SECTION (E/195)

¾" = 1'-0"

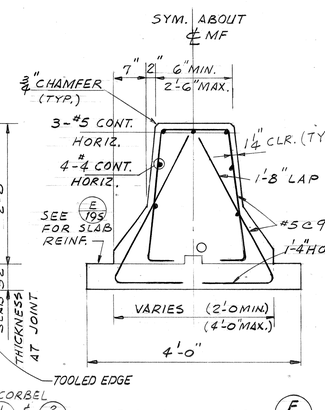


## SECTION (F/195)

¾" = 1'-0"

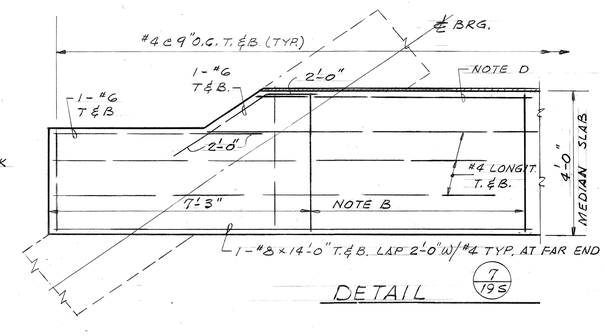


## DETAIL (7/195)

## MEDIAN JOINT PLANS

THIS WORK WAS PREPARED BY ME OR UNDER MY SUPERVISION.
Wm. J. Armento

WILLIAM J. ARMENTO REGISTERED PROFESSIONAL ENGINEER No. 1943 HAWAII, U.S.A.

STATE OF HAWAII
DEPARTMENT OF TRANSPORTATION
HIGHWAYS DIVISION

HALAWA INTERCHANGE STRUCTURE NO. 4

MOANALUA FREEWAY OVER H-3

MEDIAN DETAILS

PROJ. No. I-H1-1(89):13 DATE: MAY 1971

Scale ½" = 1'-0" U.N. SHEET No. 19S OF 19S SHEETS

| | | | |
|---|---|---|---|
| ORIGINAL PLAN | SURVEY PLOTTED BY | | DATE 5/21/70 |
| | DRAWN BY | | " " 5/21/70 |
| | TRACED BY | | " " 5/21/70 |
| | DESIGNED BY | J. Rodriguez | " " 5/21/70 |
| NOTE BOOK | QUANTITIES BY | | " " 5/21/70 |
| No. | CHECKED BY | R. Wakatsuki | " " 5/21/70 |

200