FED. ROAD DIST. NO.	STATE	FED. AID PROJ. NO.	FISCAL YEAR	SHEET NO.	TOTAL SHEETS
HAWAII	HAW.	I-H1-1(89):13	1971	211	362

Baseline Curve Data: Curve No. (63)

$\Delta = 13°-34'-45.0''$

$R = 1000.00'$

$L = 237.00'$

$T = 119.06'$

Note: Azimuths are measured from the South.

ESTIMATED QUANTITIES

ITEM NO.	ITEM	UNIT	QUANTITY
206.60	Structure Excavation for Bridges	C.Y.	1,500
503.077	Concrete in Structure No. 16 Except Footings	L.S.	1,200 C.Y.
503.078	Concrete in Structure No. 16 Footings	L.S.	500 C.Y.
504.17	Type IV Prestressed Concrete Girders	L.S.	3,545 L.F.
507.10	Metal Bridge Railing-One Rail on Parapet	L.F.	1,247
507.70	Conc. Bridge Parapet, Including End Post	L.F.	1,287
602.014	Reinforcing Steel in Structure No. 16	L.S.	323,000 lbs.
612.01	Grouted Rubble Paving	C.Y.	175
206.81	Filter Material for Structures	C.Y.	30

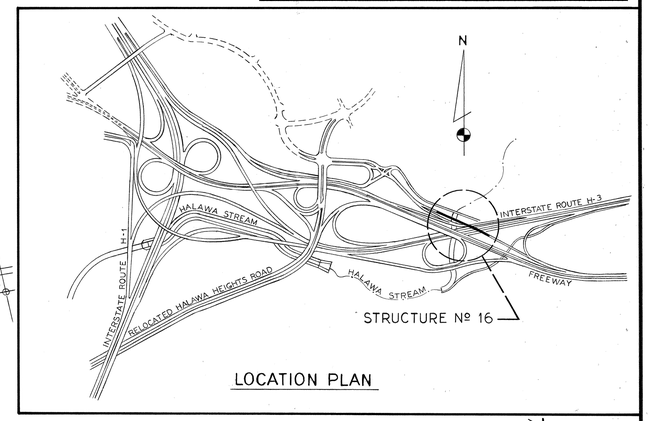

LOCATION PLAN

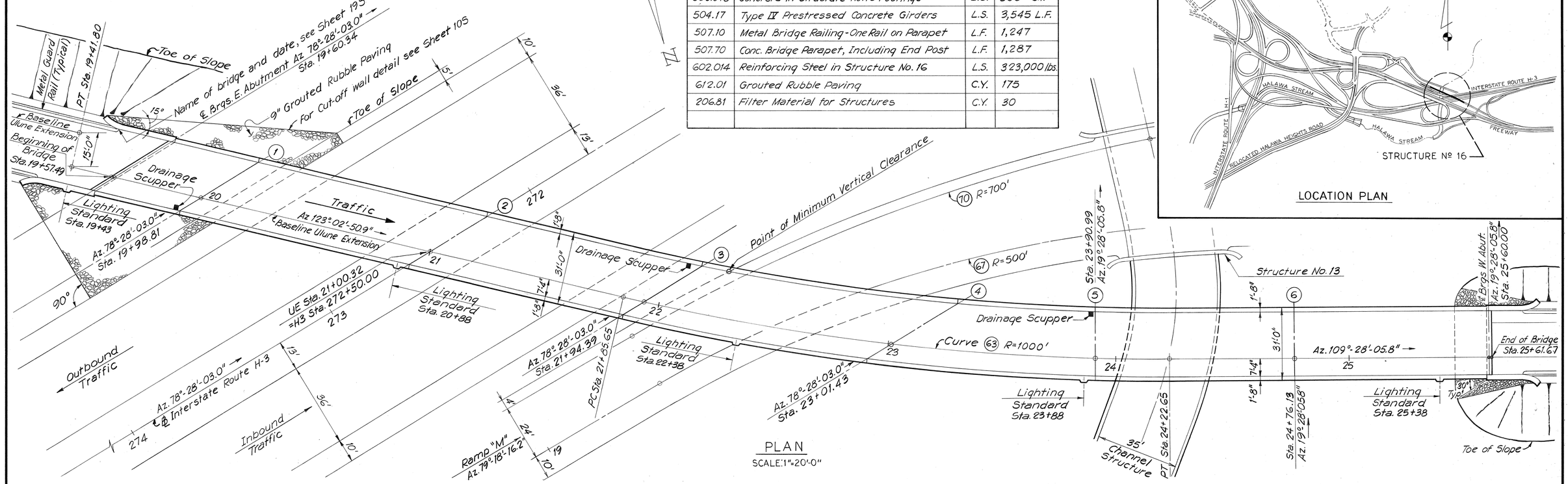

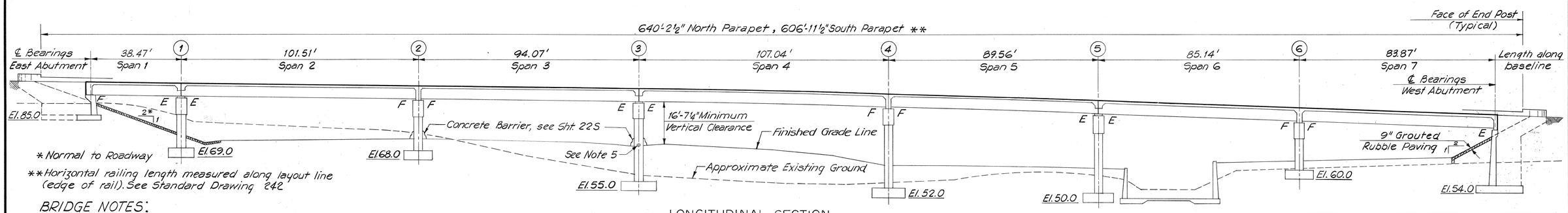

LONGITUDINAL SECTION
SCALE: 1"=20'-0"

* Normal to Roadway

** Horizontal railing length measured along layout line (edge of rail). See Standard Drawing 242

BRIDGE NOTES:

1. DESIGN SPECIFICATIONS
   "Standard Specifications for Highway Bridges" A.A.S.H.O. 1969 with subsequent additions and modifications by the State of Hawaii Department of Transportation.
2. DESIGN LIVE LOAD:
   H.S 20-44 or Interstate Loading.
3. DESIGN STRESSES:
   f'c = 3000 psi, see Sht 13S for Prestressed Conc. Girder Design Stresses.
   fc = 1200 psi
   n = 10
   fs = 20,000 psi tension
4. MATERIALS:
   All Reinf. Steel to be ASTM Designation A615 Grade 40.
5. Scupper Outfall Pipe South side of Bridge, see Sheet 22S.
6. For General Notes, see Sheet 241
7. For Metal Bridge Railing Details, see Sheets 242 & 243
8. For End Post Details, see Sheet 19S.
9. Allowable Foundation Pressure: 6000 psf.

ORIGINAL PLAN		DATE
	SURVEY PLOTTED BY	
	DRAWN BY	
	TRACED BY	
NOTE BOOK	DESIGNED BY	
	QUANTITIES BY	
No.	CHECKED BY	

THOMAS R. KUESEL REGISTERED PROFESSIONAL ENGINEER No. 1856 HAWAII, U. S. A.

THIS WORK WAS PREPARED BY ME OR UNDER MY SUPERVISION.

Thomas R. Kuesel

STATE OF HAWAII
DEPARTMENT OF TRANSPORTATION
HIGHWAYS DIVISION

HALAWA INTERCHANGE
STRUCTURE NO. 16

ULUNE EXTENSION VIADUCT

GENERAL PLAN

PROJ. NO. I-H1-1(89):13 DATE: MAY 1971

SHEET No. 1S OF 22S SHEETS

211

FED. ROAD DIST. NO.	STATE	FED. AID PROJ. NO.	FISCAL YEAR	SHEET NO.	TOTAL SHEETS
HAWAII	HAW.	I-H1-1(89):13	1971	212	362

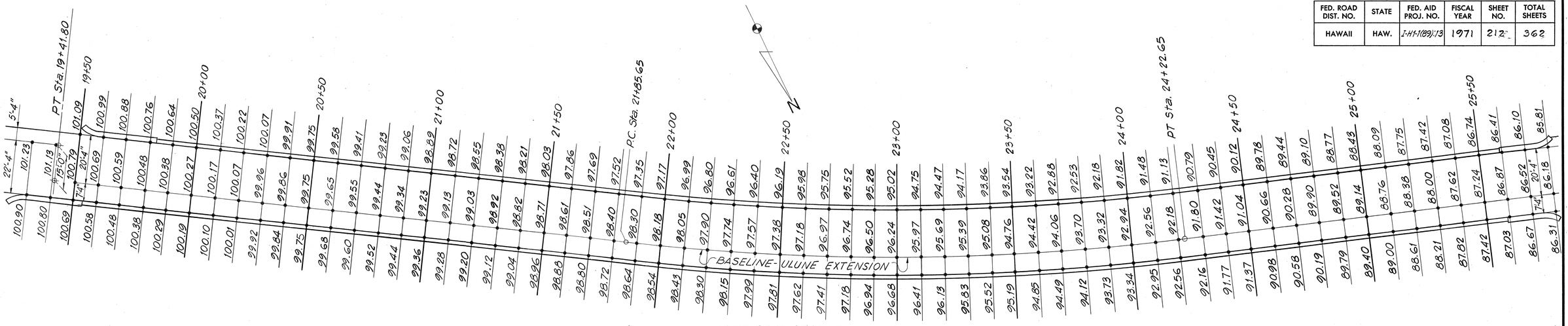

10FT GRID GRADES

SCALE: 1"=20'

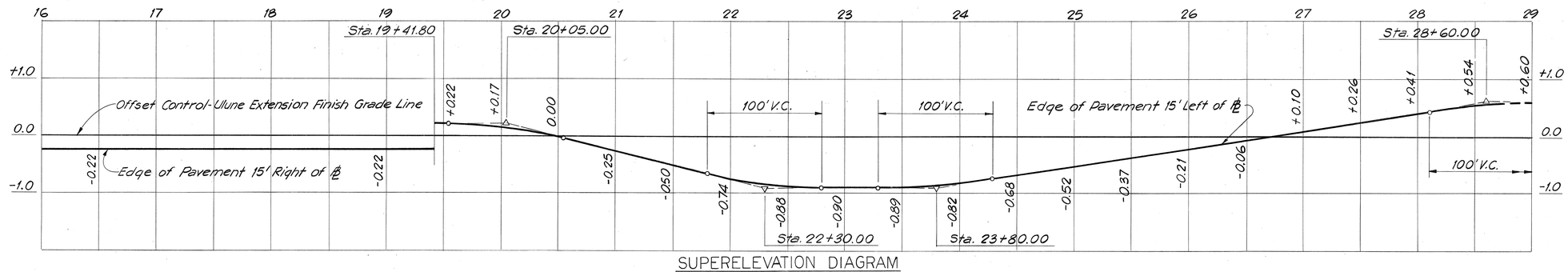

SUPERELEVATION DIAGRAM

SCALE: HORIZ. 1"=50'
VERT 1"=1'

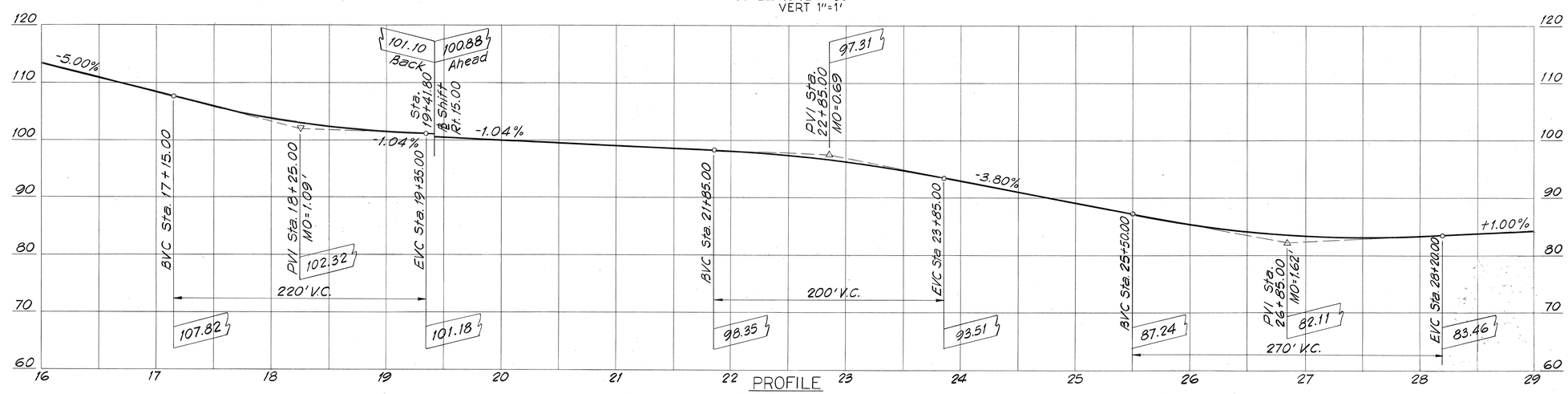

PROFILE

SCALE: HORIZ. 1"=50'
VERT. 1"=10'

ORIGINAL PLAN	SURVEY PLOTTED BY	DATE
	TRACED BY	
	DESIGNED BY	
NOTE BOOK	QUANTITIES BY	
No.	CHECKED BY	

THOMAS R. KUESEL
REGISTERED PROFESSIONAL ENGINEER
No. 1856
HAWAII, U.S.A.

THIS WORK WAS PREPARED BY ME OR UNDER MY SUPERVISION.

Thomas R. Kuesel

STATE OF HAWAII
DEPARTMENT OF TRANSPORTATION
HIGHWAYS DIVISION

HALAWA INTERCHANGE
STRUCTURE NO. 16

ULUNE EXTENSION VIADUCT

DECK ELEVATIONS & PROFILES

PROJ. NO. I-H1-1(89):13 DATE: MAY 1971

SHEET No. 25 OF 225 SHEETS

212

FED. ROAD DIST. NO.	STATE	FED. AID PROJ. NO.	FISCAL YEAR	SHEET NO.	TOTAL SHEETS
HAWAII	HAW.	I-HI-1(89):13	1971	213	362

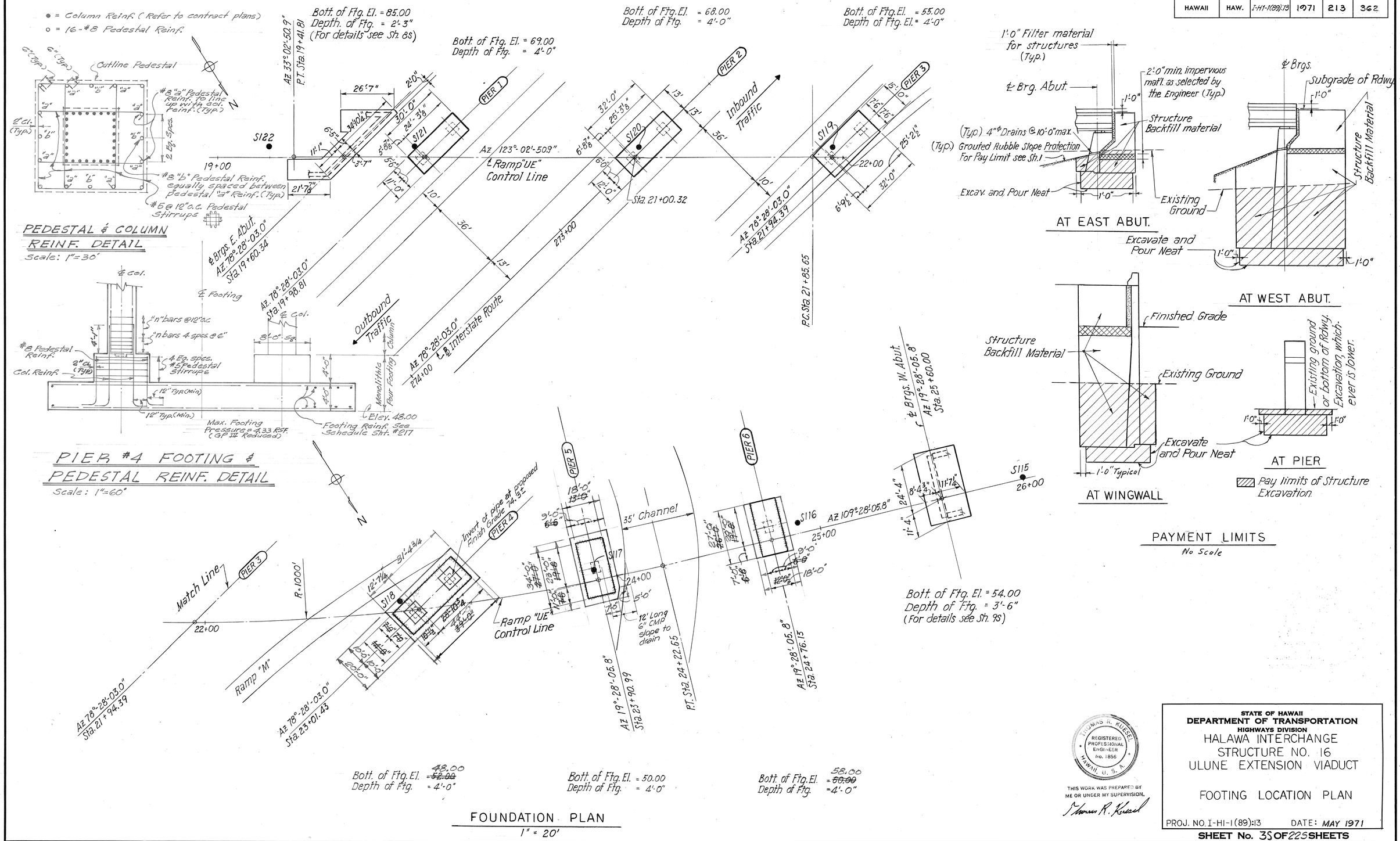

ORIGINAL PLAN		DATE
	SURVEY PLOTTED BY	
	TRACED BY J.A.S.	12/16/70
	DESIGNED BY " "	" "
NOTE BOOK	QUANTITIES BY " "	" "
No.	CHECKED BY	12/16/70

THOMAS R. KUESEL
REGISTERED PROFESSIONAL ENGINEER
No. 1856
HAWAII, U.S.A.

THIS WORK WAS PREPARED BY ME OR UNDER MY SUPERVISION.

Thomas R. Kuesel

STATE OF HAWAII
DEPARTMENT OF TRANSPORTATION
HIGHWAYS DIVISION

HALAWA INTERCHANGE
STRUCTURE NO. 16
ULUNE EXTENSION VIADUCT

FOOTING LOCATION PLAN

PROJ. NO. I-HI-1(89):13 DATE: MAY 1971

SHEET No. 3S OF 225 SHEETS

213

FED. ROAD DIST. NO.	STATE	FED. AID PROJ. NO.	FISCAL YEAR	SHEET NO.	TOTAL SHEETS
HAWAII	HAW.	I-H1-1(89):13	1971	214	362

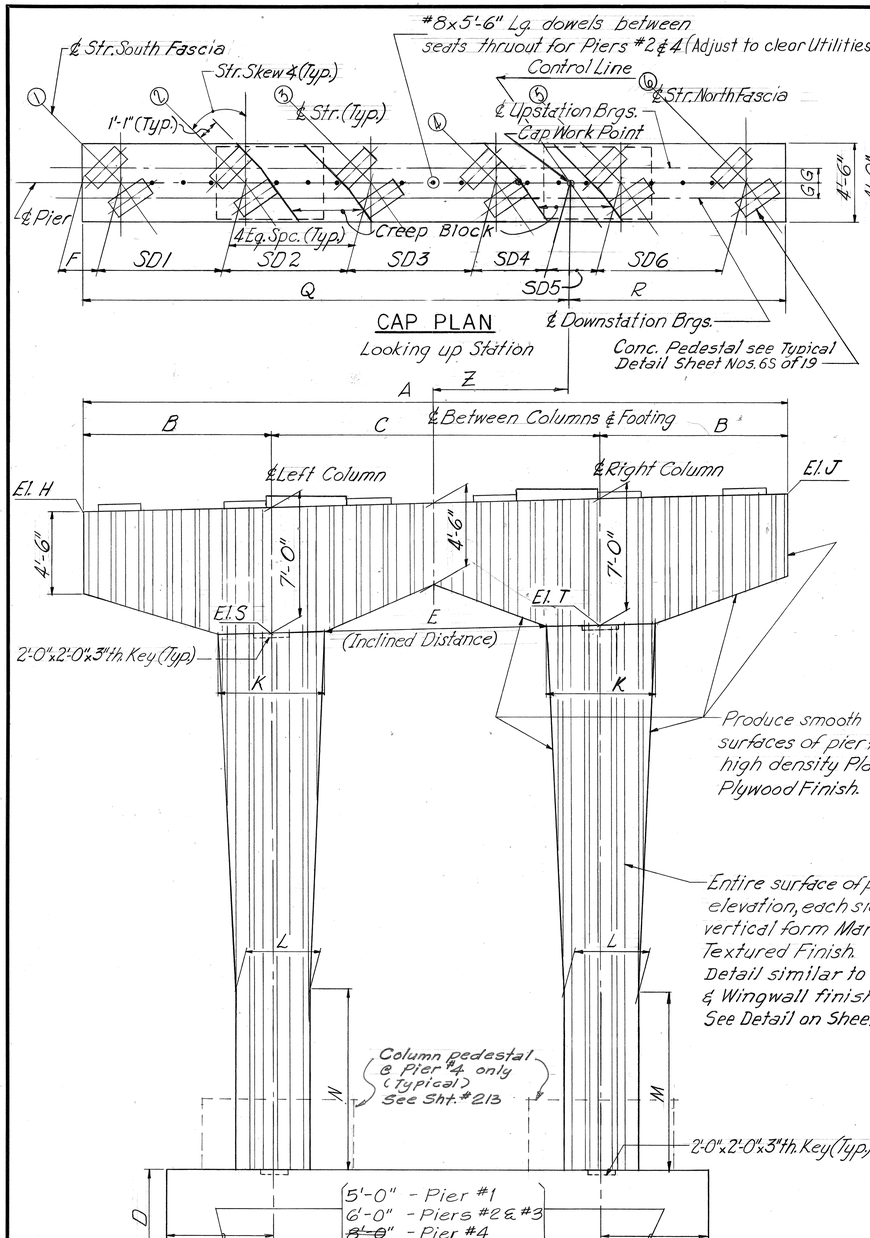

CAP PLAN

Looking up Station

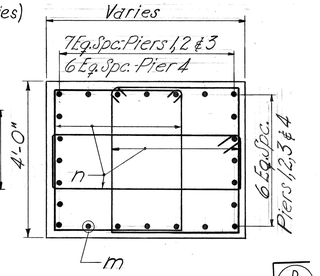

SECTION C-C

ELEVATION

Looking up Station

TYPE I PIER

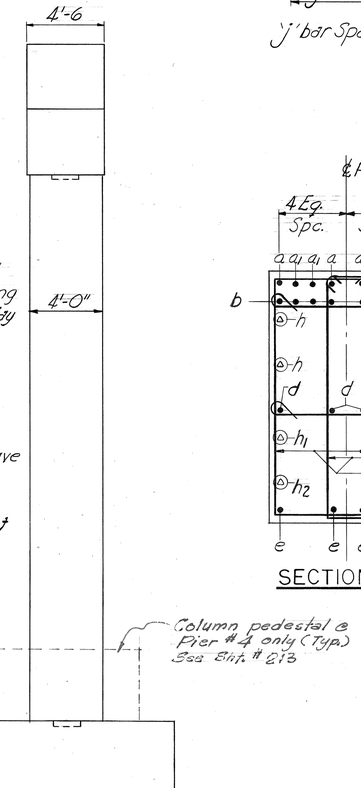

END VIEW

SECTION A-A

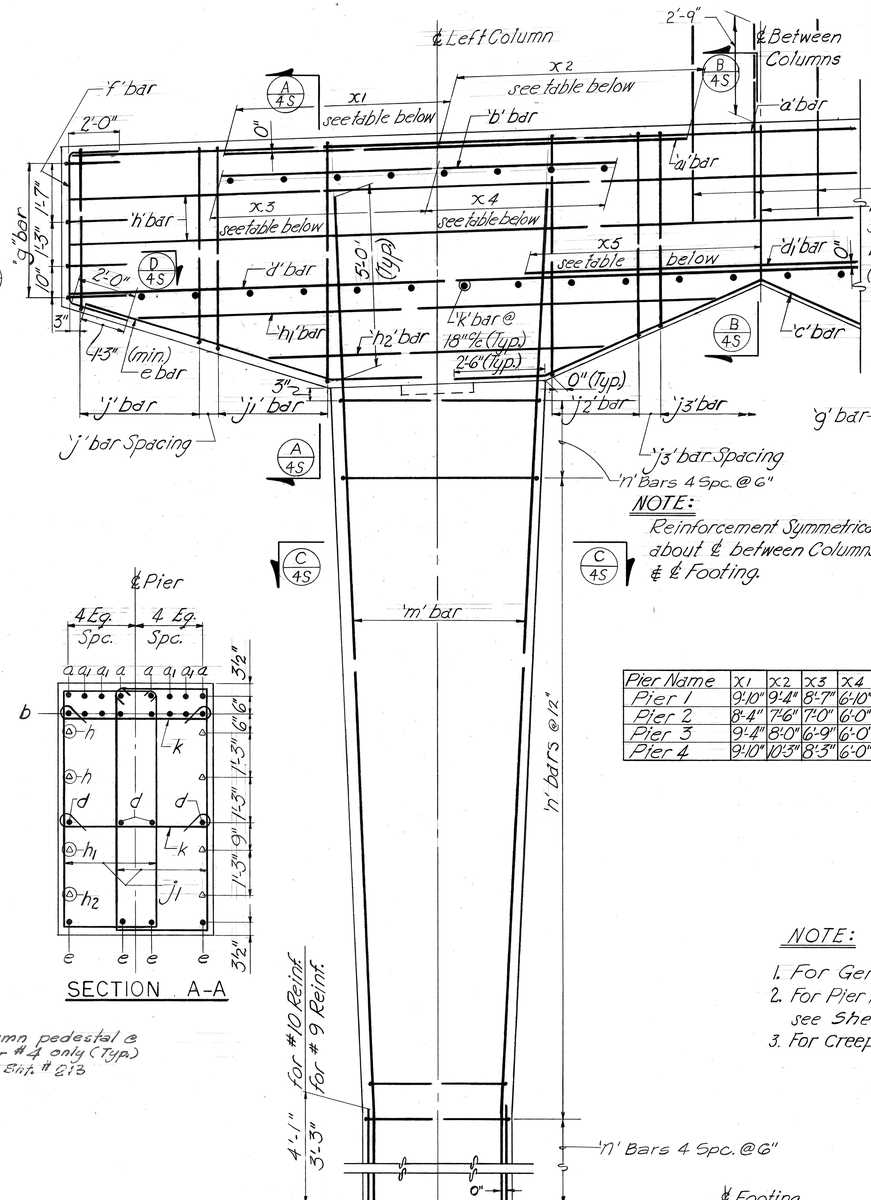

NOTE:

Reinforcement Symmetrical about ℄ between Columns & ℄ Footing.

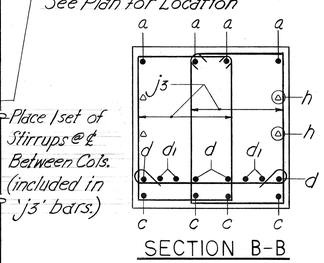

SECTION B-B

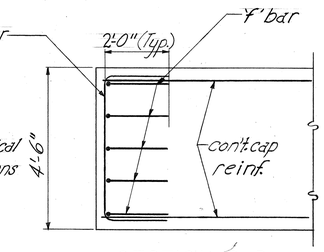

SECTION D-D

Pier Name	x1	x2	x3	x4	x5
Pier 1	9'-10"	9'-4"	8'-7"	6'-10"	6'-9"
Pier 2	8'-4"	7'-6"	7'-0"	6'-0"	8'-3"
Pier 3	9'-4"	8'-0"	6'-9"	6'-0"	—
Pier 4	9'-10"	10'-3"	8'-3"	6'-0"	—

NOTE:

1. For General Pier Notes see Sh. No. 5S.
2. For Pier Tables & Reinforcement Schedule see Sheet Nos. 7S.
3. For Creep Block Detail, see Sh. 6S.

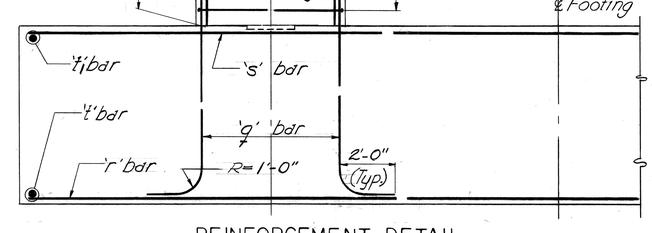

REINFORCEMENT DETAIL

THOMAS A. KUESEL REGISTERED PROFESSIONAL ENGINEER No. 1856 HAWAII, U.S.A.

THIS WORK WAS PREPARED BY ME OR UNDER MY SUPERVISION.

STATE OF HAWAII
DEPARTMENT OF TRANSPORTATION
HIGHWAYS DIVISION

HALAWA INTERCHANGE
STRUCTURE NO. 16
ULUNE EXTENSION VIADUCT

TYPE I PIER
GEOMETRY & REINFORCEMENT DETAILS

PROJ. NO. I-H1-1(89):13 DATE: MAY 1971

SHEET No. 4S OF 22S SHEETS

214

ORIGINAL PLAN	SURVEY PLOTTED BY	DATE
	DRAWN BY	
	TRACED BY	
NOTE BOOK	DESIGNED BY	
No.	QUANTITIES BY	
	CHECKED BY	

PRINTED ON NO. 1000H CLEARPRINT

FED. ROAD DIST. NO.	STATE	FED. AID PROJ. NO.	FISCAL YEAR	SHEET NO.	TOTAL SHEETS
HAWAII	HAW.	I-H1-1(89):13	1971	215	362

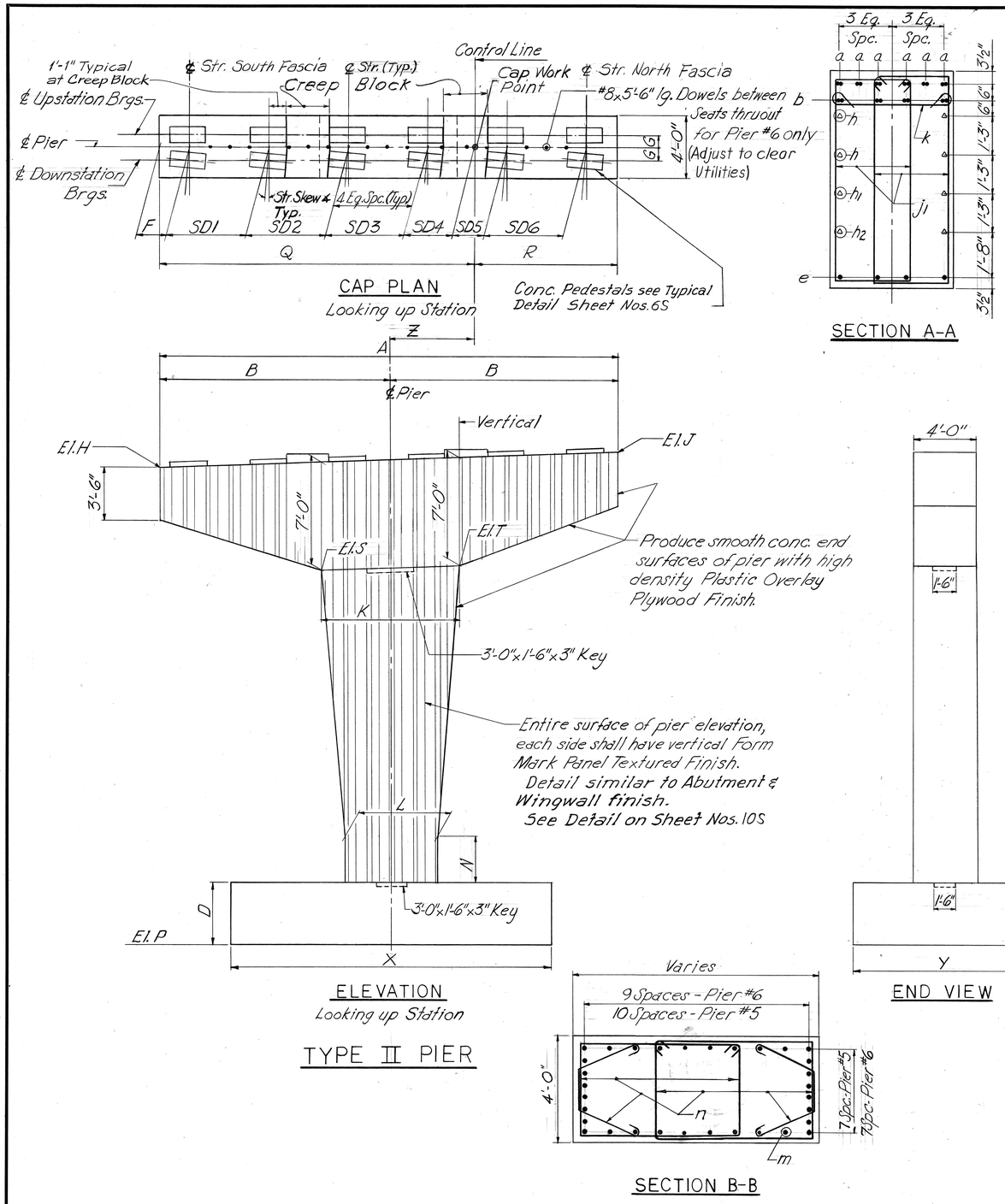

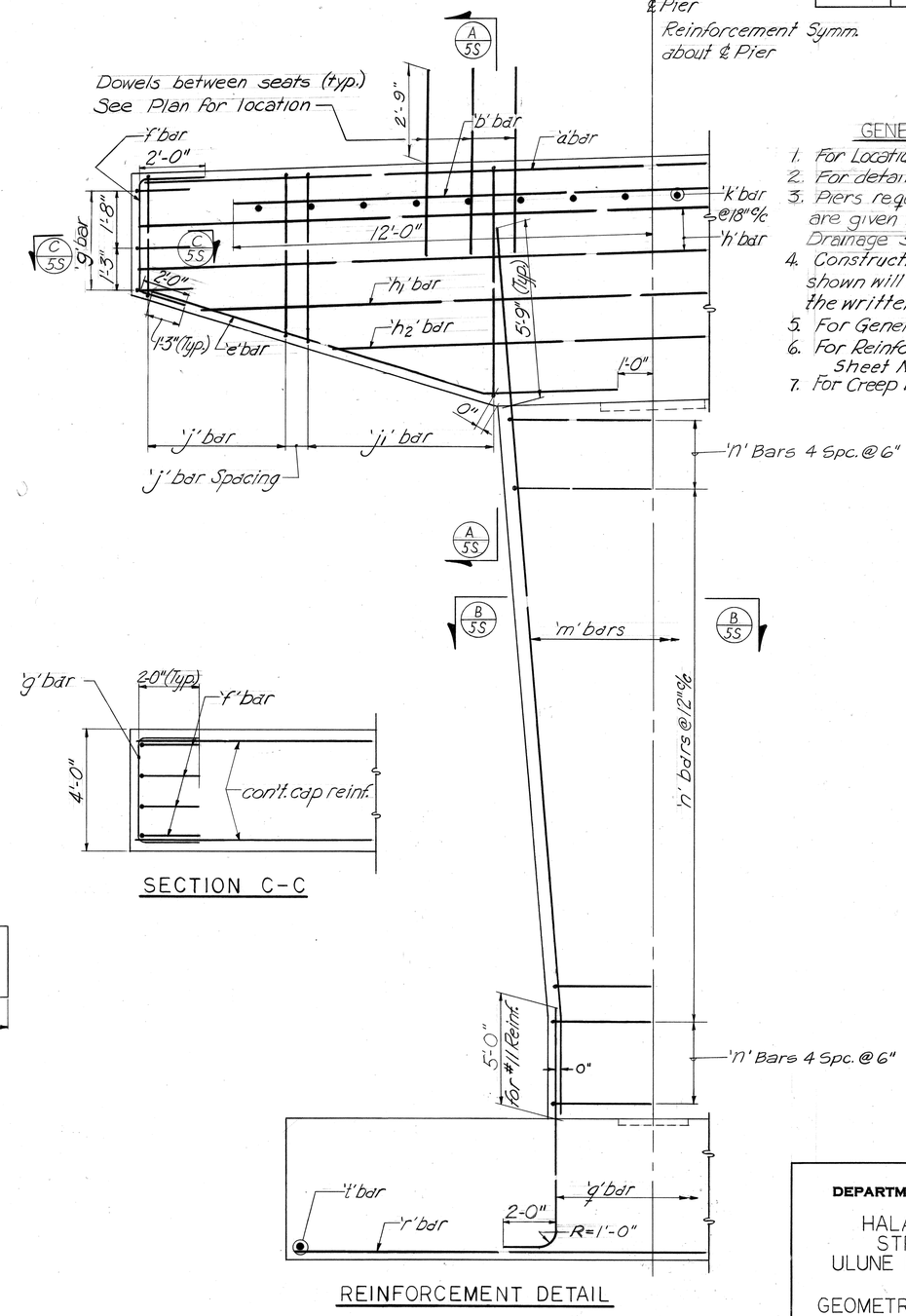

GENERAL PIER NOTES

1. For Location of Piers see General Plans.
2. For details of pedestals see Sh. No. 10a.6S
3. Piers requiring Embeded Drain Pipe are given in tables, For location of Drainage see Sh. Nos. 3S & 17S.
4. Construction Joints other than those shown will not be permitted without the written approval of the Engineer.
5. For General Notes see Sh. No. 2A1
6. For Reinforcement Schedule see Sheet No. 7S
7. For Creep Block Details, see Sh. 6S

THOMAS H. KUSSEL REGISTERED PROFESSIONAL ENGINEER No. 1856 HAWAII, U.S.A.

THIS WORK WAS PREPARED BY ME OR UNDER MY SUPERVISION.

STATE OF HAWAII
DEPARTMENT OF TRANSPORTATION
HIGHWAYS DIVISION

HALAWA INTERCHANGE
STRUCTURE NO. 16
ULUNE EXTENSION VIADUCT
TYPE II PIER
GEOMETRY & REINFORCEMENT DETAILS

PROJ. NO. I-HI-1(89):13 DATE: MAY 1971

SHEET No. 5S OF 22S SHEETS

215

ORIGINAL PLAN		DATE
	SURVEY PLOTTED BY	
	DRAWN BY	6/16/70
	TRACED BY	" " "
	DESIGNED BY	" " "
NOTE BOOK	QUANTITIES BY	" " "
No.	CHECKED BY	10/16/70

PRINTED ON NO. 1000H CLEARPRINT

FED. ROAD DIST. NO.	STATE	FED. AID PROJ. NO.	FISCAL YEAR	SHEET NO.	TOTAL SHEETS
HAWAII	HAW.	I-H1-1(89):13	1971	216	362

TABLE "A"

BRG. TYPE	THICKNESS "X"	WIDTH "Y"	REMARKS
E1	1"	5"	1-Lamination Req'd.
E2	1½"	7½"	2-Lamination Req'd.

TABLE "B"

PEDESTAL TYPE	LENGTH = b	WIDTH = a	CORRESPONDING EXP. BRG. TYPE
I	2'-4"	10"	E1
II	2'-4"	12½"	E2
III	2'-3"	10"	E1
IV	2'-3"	12½"	E2

Pedestal Type for each Stringer at Piers see Sheets 7S

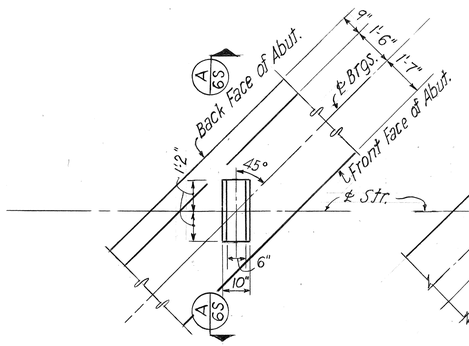

TYPICAL PEDESTAL DETAIL AT EAST ABUTMENT

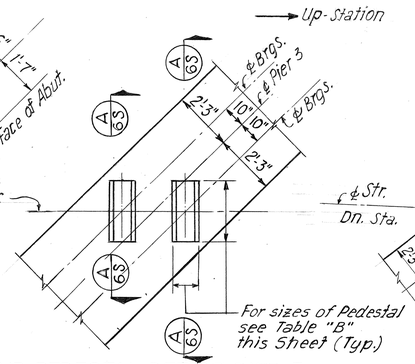

TYP. PEDESTAL DET. AT PIER 3

(Pad details at Piers 1 & 2 similar except as noted)

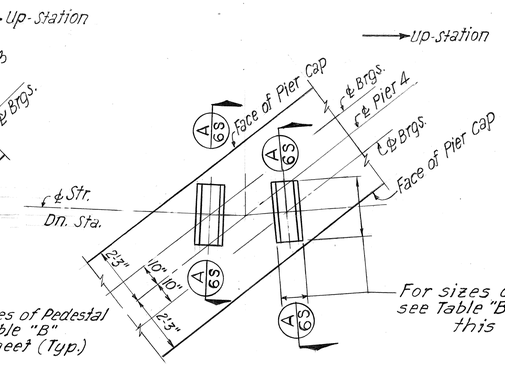

TYP. PEDESTAL DET. AT PIER 4

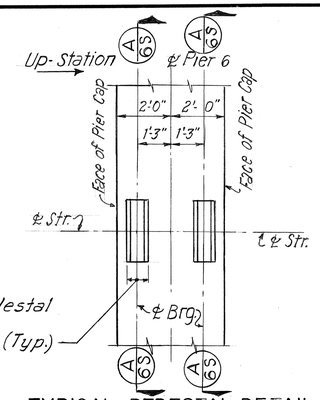

TYPICAL PEDESTAL DETAIL AT RADIAL PIERS

(Detail shown for Pier 6)
(Details similar for Pier 5 except as noted)

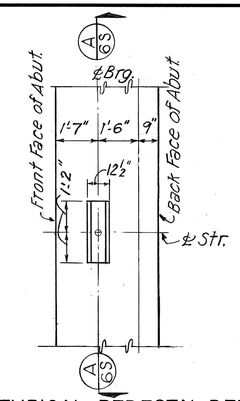

TYPICAL PEDESTAL DETAIL AT WEST ABUT.

NOTE: For Pedestal detail adjacent to creep Block see "Typical Detail at creep Block" on this Sheet.

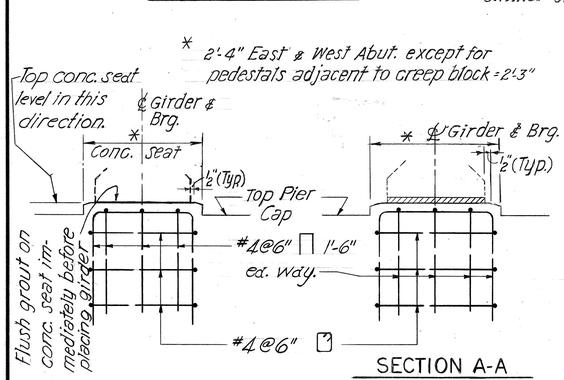

SECTION A-A FIXED BRGS.

SECTION A-A EXPAN. BRGS.

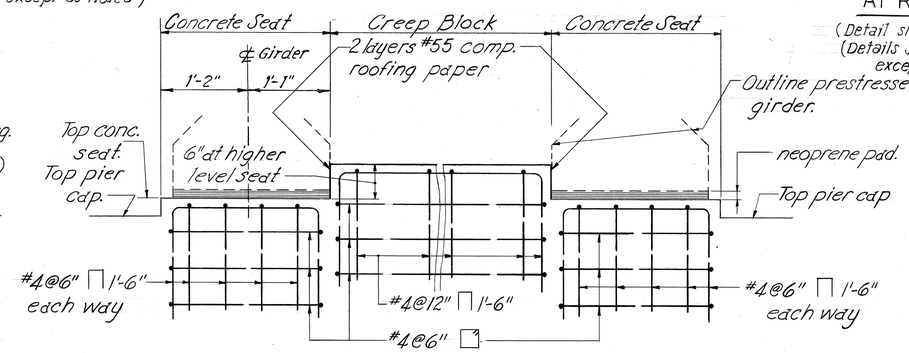

TYPICAL DETAIL AT CREEP BLOCK

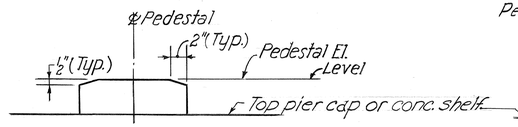

LEVEL PEDESTAL

Typical Pad Detail

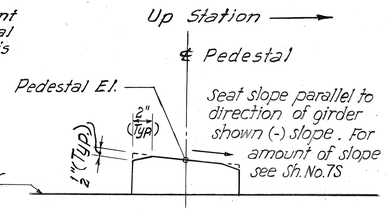

INCLINED PEDESTAL

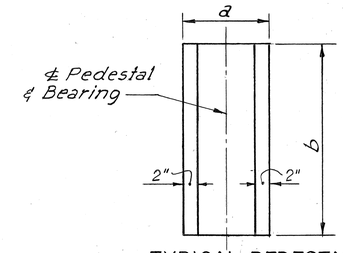

TYPICAL PEDESTAL

(See Table "B")

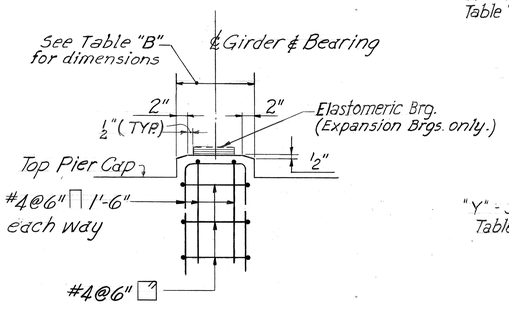

TYPICAL DET. AT PEDESTALS

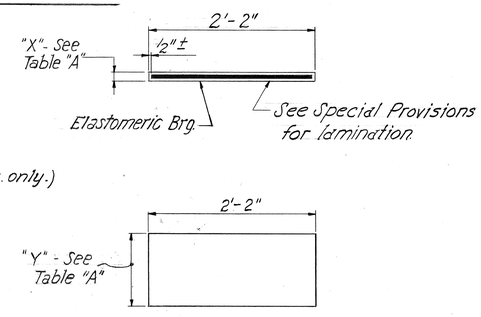

ELASTOMERIC BRG. DETS.

ORIGINAL PLAN	SURVEY PLOTTED BY	DATE
	DRAWN BY	10/16/70
	TRACED BY	
NOTE BOOK	DESIGNED BY	
No.	QUANTITIES BY	
	CHECKED BY	10/16/70

THOMAS R. KUESEL REGISTERED PROFESSIONAL ENGINEER No. 1856 HAWAII, U.S.A.

THIS WORK WAS PREPARED BY ME OR UNDER MY SUPERVISION.

STATE OF HAWAII
DEPARTMENT OF TRANSPORTATION
HIGHWAYS DIVISION

HALAWA INTERCHANGE
STRUCTURE NO. 16
ULUNE EXTENSION VIADUCT
TYPE I & II PIERS
MISCELLANEOUS DETAILS

PROJ. NO. I-H1-1(89):13 DATE: MAY 1971

SCALE: 3/8" = 1'-0" Unless Noted SHEET No. 6S OF 22S SHEETS

216

TABLE OF PIER DIMENSIONS AND ELEVATIONS

		PIER 1	PIER 2	PIER 3	PIER 4	PIER 5	PIER 6
PIER NAME							
PIER TYPE		I	I	I	I	II	II
WORK POINT STA. OF ℄ PIER		19 + 98.81	21 + 00.32	21 + 94.39	23 + 01.43	23 + 90.99	24 + 76.13
SOUTH AZIMUTH OF ℄ PIER		78°-28'-03.0"	78°-28'-03.0"	78°-28'-03.0"	78°-28'-03.0"	19°-28'-05.8"	19°-28'-05.8"
CAP	LENGTH OF CAP "A"	42'-0 1/2"	42'-0 1/2"	42'-0 1/2"	47'-10 3/4"	30'-0"	30'-0"
	CANTILEVER LENGTH "B"	11'-0 1/4"	11'-0 1/4"	11'-0 1/4"	12'-5 3/8"	15'-0"	15'-0"
	COLUMN SPACING "C"	20'-0"	20'-0"	20'-0"	23'-0"	—	—
	CHORD LENGTH "E"	14'-0"	14'-0"	14'-0 1/8"	17'-0 3/8"	—	—
	DIMENSION "F"	2'-6"	2'-6"	2'-6"	2'-9"	2'-0"	2'-0"
	DIST. ℄ BRGS. TO ℄ PIER "G"	10"	10"	10"	10"	1'-3"	1'-3"
	ELEVATION "H"	94.55	92.89	91.05	88.49	86.30	83.52
	ELEVATION "J"	94.55	93.84	92.94	91.30	87.95	84.72
	DISTANCE "Q"	30'-3 3/8"	30'-3 3/8"	30'-2 3/4"	33'-4 1/8"	21'-0"	21'-6"
	DISTANCE "R"	11'-9 1/2"	11'-9 1/2"	11'-9 3/4"	14'-6 5/8"	9'-0"	8'-6"
COLUMN	TOP WIDTH "K"	6'-0"	6'-0"	6'-0"	6'-0"	9'-0"	9'-0"
	BOTTOM WIDTH "L"	4'-10"	4'-11"	4'-8"	4'-1"	5'-6"	6'-9"
	HEIGHT "M"	2'-11"	3'-8"	10'-11"	8'-4"	—	—
	HEIGHT "N"	2'-11"	3'-4"	10'-0"	7'-0"	8'-8"	~~1'-10"~~ 2'-10"
	ELEVATION "S"	87.55	86.14	84.55	82.22	79.93	76.94
	ELEVATION "T"	87.55	86.59	85.45	83.57	80.43	77.30
	DIMENSION "Z"	9'-3 1/8"	9'-3 1/8"	9'-2 1/2"	9'-4 3/4"	6'-0"	6'-6"
STRINGER SPACING	DISTANCE SD1	7'-4 7/8"	7'-4 7/8"	7'-4 7/8"	8'-5 3/4"	5'-2 3/8"	5'-2 3/8"
	-do- SD2	7'-4 7/8"	7'-4 7/8"	7'-4 7/8"	8'-5 3/4"	5'-2 3/8"	5'-2 3/8"
	-do- SD3	7'-4 7/8"	7'-4 7/8"	7'-4 7/8"	8'-5 3/4"	5'-2 3/8"	5'-2 3/8"
	-do- SD4	5'-6 3/4"	5'-6 3/4"	5'-6 1/8"	5'-1 7/8"	3'-4 7/8"	3'-10 7/8"
	-do- SD5	1'-10 1/4"	1'-10 1/4"	1'-10 7/8"	3'-3 7/8"	1'-9 5/8"	1'-3 5/8"
	-do- SD6	7'-4 7/8"	7'-4 7/8"	7'-4 7/8"	8'-5 3/4"	5'-2 3/8"	5'-2 3/8"
UP-STATION ℄ BRGS. DISTANCE MEASURED ALONG ℄ PIER	(1) STRINGER / PAD TYPE	2B1 / II	3B1 / II	4B1 / II	5B1 / II	6B1 / II	7B1 / II
	(1) PAD ELEVATION / PAD SLOPE	94.80 / Level	93.25 / Level	91.53 / -(1/4:12)	89.06 / -(7/16:12)	86.77 / -(7/16:12)	83.93 / -(7/16:12)
	(1) STRINGER SKEW	X -12 1/8	-12 1/8	-14 1/4	-17 5/8	0	0
	(2) STRINGER / PAD TYPE	2B2 / IV	3B2 / II	4B2 / IV	5B2 / II	6B2 / IV	7B2 / II
	(2) PAD ELEVATION / PAD SLOPE	94.83 / Level	93.46 / Level	91.89 / -(1/4:12)	89.57 / -(7/16:12)	87.06 / -(7/16:12)	84.14 / -(7/16:12)
	(2) STRINGER SKEW	X -12 1/8	-12 1/8	-14 1/8	-17 3/8	0	0
	(3) STRINGER / PAD TYPE	2B3 / IV	3B3 / II	4B3 / IV	5B3 / II	6B3 / IV	7B3 / II
	(3) PAD ELEVATION / PAD SLOPE	94.85 / Level	93.64 / Level	92.24 / -(1/4:12)	90.07 / -(7/16:12)	87.34 / -(7/16:12)	84.35 / -(7/16:12)
	(3) STRINGER SKEW	X -12 1/8	-12 1/8	-13 7/8	-17 1/4	0	0
	(4) STRINGER / PAD TYPE	2B4 / IV	3B4 / II	4B4 / IV	5B4 / II	6B4 / IV	7B4 / II
	(4) PAD ELEVATION / PAD SLOPE	94.86 / Level	93.81 / Level	92.58 / -(1/4:12)	90.57 / -(3/8:12)	87.63 / -(7/16:12)	84.55 / -(7/16:12)
	(4) STRINGER SKEW	X -12 1/8	-12 1/8	-13 3/4	-17 1/8	0	0
	(5) STRINGER / PAD TYPE	2B5 / IV	3B5 / II	4B5 / IV	5B5 / II	6B5 / IV	7B5 / II
	(5) PAD ELEVATION / PAD SLOPE	94.86 / Level	93.96 / Level	92.89 / Level	91.06 / -(3/8:12)	87.91 / -(7/16:12)	84.76 / -(7/16:12)
	(5) STRINGER SKEW	X -12 1/8	-12 1/8	-13 1/2	-17	0	0
	(6) STRINGER / PAD TYPE	2B6 / II	3B6 / II	4B6 / II	5B6 / II	6B6 / II	7B6 / II
	(6) PAD ELEVATION / PAD SLOPE	94.85 / Level	94.09 / Level	93.19 / Level	91.55 / -(3/8:12)	88.20 / -(7/16:12)	84.97 / -(1/2:12)
	(6) STRINGER SKEW	X -12 1/8	-12 1/8	-13 3/8	-16 7/8	0	0
DOWN-STATION ℄ BRGS. DISTANCE MEASURED ALONG ℄ PIER	(1) STRINGER / PAD TYPE	1B1 / I	2B1 / II	3B1 / II	4B1 / II	5B1 / II	6B1 / II
	(1) PAD ELEVATION / PAD SLOPE	94.88 / Level	93.29 / Level	91.57 / Level	89.14 / -(1/4:12)	86.87 / -(7/16:12)	84.02 / -(7/16:12)
	(1) STRINGER SKEW	X -12 1/8	-12 1/8	-12 1/8	-14 1/4	+5/8	0
	(2) STRINGER / PAD TYPE	1B2 / III	2B2 / II	3B2 / IV	4B2 / II	5B2 / IV	6B2 / II
	(2) PAD ELEVATION / PAD SLOPE	94.90 / Level	93.49 / Level	91.94 / Level	89.65 / -(1/4:12)	87.15 / -(7/16:12)	84.23 / -(7/16:12)
	(2) STRINGER SKEW	X -12 1/8	-12 1/8	-12 1/8	-14 1/8	+3/4	0
	(3) STRINGER / PAD TYPE	1B3 / III	2B3 / II	3B3 / IV	4B3 / II	5B3 / IV	6B3 / II
	(3) PAD ELEVATION / PAD SLOPE	94.92 / Level	93.68 / Level	92.28 / Level	90.15 / -(1/4:12)	87.44 / -(7/16:12)	84.44 / -(7/16:12)
	(3) STRINGER SKEW	X -12 1/8	-12 1/8	-12 1/8	-13 7/8	+7/8	0
	(4) STRINGER / PAD TYPE	1B4 / III	2B4 / II	3B4 / IV	4B4 / II	5B4 / IV	6B4 / II
	(4) PAD ELEVATION / PAD SLOPE	94.93 / Level	93.84 / Level	92.61 / Level	90.64 / -(1/4:12)	87.72 / -(3/8:12)	84.65 / -(7/16:12)
	(4) STRINGER SKEW	X -12 1/8	-12 1/8	-12 1/8	-13 3/4	+7/8	0
	(5) STRINGER / PAD TYPE	1B5 / III	2B5 / II	3B5 / IV	4B5 / II	5B5 / IV	6B5 / II
	(5) PAD ELEVATION / PAD SLOPE	94.92 / Level	93.99 / Level	92.92 / Level	91.13 / Level	88.01 / -(3/8:12)	84.86 / -(7/16:12)
	(5) STRINGER SKEW	X -12 1/8	-12 1/8	-12 1/8	-13 1/2	+7/8	0
	(6) STRINGER / PAD TYPE	1B6 / I	2B6 / II	3B6 / II	4B6 / II	5B6 / II	6B6 / II
	(6) PAD ELEVATION / PAD SLOPE	94.91 / Level	94.11 / Level	93.21 / Level	91.62 / Level	88.29 / -(3/8:12)	85.06 / -(7/16:12)
	(6) STRINGER SKEW	X -12 1/8	-12 1/8	-12 1/8	-13 3/8	+7/8	0
FTG.	DIMENSION "X"	30'-0"	32'-0"	32'-0"	~~39'-0"~~ 44'-0"	~~27'-0"~~ 34'-0"	~~26'-0"~~ 27'-0"
	DIMENSION "Y"	11'-0"	12'-0"	15'-0"	~~14'-0"~~ 20'-0"	~~13'-0"~~ 18'-0"	~~12'-0"~~ 18'-0"
	HEIGHT "D"	4'-0"	4'-0"	4'-0"	4'-0"	4'-0"	4'-0"
	EL. BOTT. OF FTG. "P"	69.00	68.00	55.00	~~52.00~~ 48.00	50.00	~~60.00~~ 58.00
	DRAINAGE REQUIRED	YES	NO	YES	NO	YES	NO

FED. ROAD DIST. NO.	STATE	FED. AID PROJ. NO.	FISCAL YEAR	SHEET NO.	TOTAL SHEETS
HAWAII	HAW.	I-HI-1(89):13	1971	217	362

REINFORCEMENT SCHEDULE

PIER		PIER 1				PIER 2				PIER 3				PIER 4				PIER 5				PIER 6			
DESCRIPTION		SIZE	NO.	SPG.	LENGTH	SIZE	NO.	SPG.	LENGTH	SIZE	NO.	SPG.	LENGTH	SIZE	NO.	SPG.	LENGTH	SIZE	NO.	SPG.	LENGTH	SIZE	NO.	SPG.	LENGTH
CAP REINF.	a Bar	8	4	—	—	10	4	—	—	10	4	—	—	10	4	—	—	11	12*	—	—	11	12*	—	—
	a_1 "	8	8	—	19'-2"	10	8	—	15'-10"	10	8	—	17'-4"	10	8	—	20'-1"	—	—	—	—	—	—	—	—
	b "	8	16	—	15'-5"	10	12	—	13'-0"	10	8	—	12'-9"	10	16	—	14'-3"	11	8†	—	24'-0"	11	8†		24'-0"
	c "	6	4	—	—	6	4	—	—	6	4	—	—	6	4	—	—	—	—	—	—	—	—	—	—
	d "	9	4	—	—	10	4	—	—	8	4	—	—	10	4	—	—	—	—	—	—	—	—	—	—
	d_1 "	9	4	—	13'-6"	10	4	—	16'-6"	—	—	—	—	—	—	—	—	—	—	—	—	—	—	—	—
	e "	6	8	—	—	6	8	—	—	6	8	—	—	6	8	—	—	6	8	—	—	6	8	—	—
	f "	5	10	—	—	5	10	—	—	5	10	—	—	5	10	—	—	5	8	—	—	5	8	—	—
	g "	5	8	—	—	5	8	—	—	5	8	—	—	5	8	—	—	5	6	—	—	5	6	—	—
	h "	5	4	—	—	5	4	—	—	5	4	—	—	5	4	—	—	5	4	—	—	5	4	—	—
	h_1 "	5	4	—	—	5	4	—	—	5	4	—	—	5	4	—	—	5	2	—	—	5	2	—	—
	h2 "	5	4	—	—	5	4	—	—	5	4	—	—	5	4	—	—	5	2	—	—	5	2	—	—
	j "	5	20	10"	—	5	20	10"	—	5	20	10"	—	5	24	11"	—	6	32	12"	—	6	44	10"	—
	j_1 "	5	16	12"	—	5	16	12"	—	5	16	12"	—	5	16	12"	—	6	12	12"	—	6	12	15"	—
	j_2 "	5	16	12"	—	5	16	12"	—	5	16	12"	—	5	16	12"	—	—	—	—	—	—	—	—	—
	j_3 "	5	20	12"	—	5	20	12"	—	5	20	12"	—	5	22	12"	—	—	—	—	—	—	—	—	—
	k "	5	—	18"	—	5		18"	—	5	—	18"	—	5	—	18"	—	5	—	18"	—	5	—	18"	—
COL. REINF.	m "	9	52	—	—	9	52	—	—	10	52		—	10	48	—	—	11	34	—	—	11	32	—	—
	n "	5	See Sh. 4S		—	5	See Sh. 4S		—	5	See Sh. 4S		—	5	See Sh. 4S		—	5	See Sh. 5S		—	5	See Sh. 5S		—
FTG. REINF.	q "	9	52	—	—	9	52	—	—	10	52	—	—	10	48	—	—	11	44	—	—	11	32	—	—
	r "	8	12	—	—	8	13	—	—	10	16	—	—	10	~~47~~ 22	—	cont.	~~8~~ 11	~~36~~ 36	—	cont.	~~18~~ 19	~~29~~ 29	—	cont.
	s "	10	12	—	—	11	16	—	—	9	15	—	—	10	~~49~~ 49	—	cont.	—	—	—	—	—	—	—	—
	t "	6	32	—	—	7	34	—	—	8	44	—	—	~~19~~ 18	~~34~~ 47	—	cont.	~~11~~ 17	~~34~~ 34	—	cont.	~~19~~ 19	~~34~~ 34	—	cont.
	t_1 "	6	32	—	—	7	34	—	—	8	44	—	—	~~18~~ 18	~~34~~ 47	—	cont.	—	—	—	—	—	—	—	—

* = 6-2 Bar Bundles = 12 Bars
† = 4-2 Bar Bundles = 8 Bars

Notes:
1. The "Work Point Station of ℄ Pier" is the intersection of ℄ Pier with Control Line
2. For Orientation of Azimuth of ℄ Pier refer to Footing Location Plans.
3. All Azimuths are measured from the South.
4. All Piers are dimensioned looking Up-Station.
5. Dimensions A, B, F, SD1 thru SD6, Q, R & Z are measured along ℄ Pier.
6. Number of Bars shown is total for one pier.
7. For Details of Bearing Types, Pedestal Type see Sheet No. 6 of 19.
8. Pad slopes are in inches.
9. All pad dimensions shown in this dwg. refer to concrete pedestals.

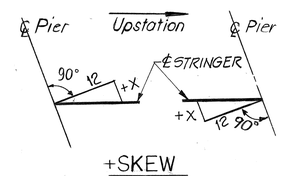

+SKEW

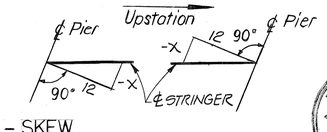

-SKEW

THOMAS N. KNUDSEN REGISTERED PROFESSIONAL ENGINEER No. 1886 HAWAII, U.S.A.

THIS WORK WAS PREPARED BY ME OR UNDER MY SUPERVISION.

Thomas N. Knudsen

STATE OF HAWAII
DEPARTMENT OF TRANSPORTATION
HIGHWAYS DIVISION
HALAWA INTERCHANGE
STRUCTURE NO. 16
ULUNE EXTENSION VIADUCT
TYPE I & II PIERS
PIER TABLE AND
REINFORCEMENT SCHEDULE
PROJ. NO. I-HI-1(89):13 DATE: MAY 1971

SHEET No. 7S OF 225 SHEETS

217

ORIGINAL PLAN		DATE
NOTE BOOK	SURVEY PLOTTED BY	
	DRAWN BY J.S.S.	12/16/70
	TRACED BY "	"
	DESIGNED BY "	"
No.	CHECKED BY L.L. 10-71	12/16/70

PRINTED ON NO. 1000H CLEARPRINT

FED. ROAD DIST. NO.	STATE	FED. AID PROJ. NO.	FISCAL YEAR	SHEET NO.	TOTAL SHEETS
HAWAII	HAW.	I-HI-1(89):13	1971	218	362

Note "A"
See Standard Drawing for notes and details of one rail combination type Metal Bridge Railing and included Lighting Standard.

	El. "A"	El. "B"
Section (A/8)	102.72	103.08
Section (B/8)	102.65	102.96

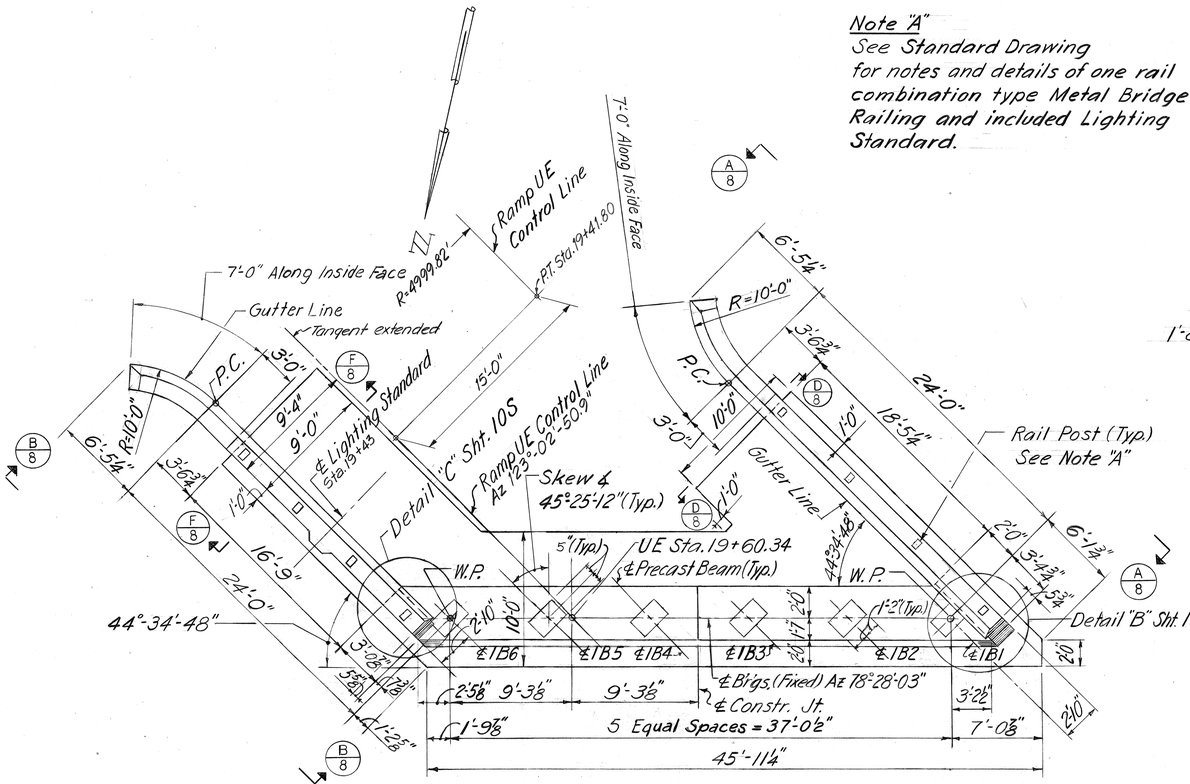

PLAN
SCALE: 3/16" = 1'-0"

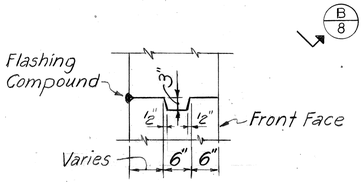

CONSTRUCTION JOINT DETAIL

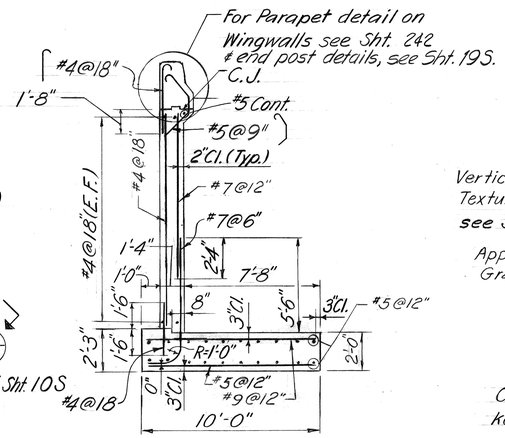

SECTION (F/8) SHOWN
SECTION (D/8) SIMILAR
SCALE: ¼" = 1'-0"

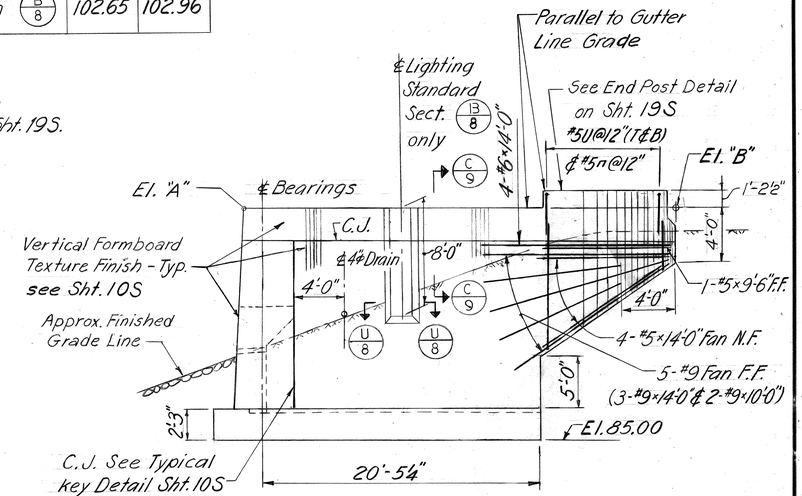

SECTION (A/8) SHOWN
SECTION (B/8) SIMILAR (OPP. HAND)
SCALE: 3/16" = 1'-0"

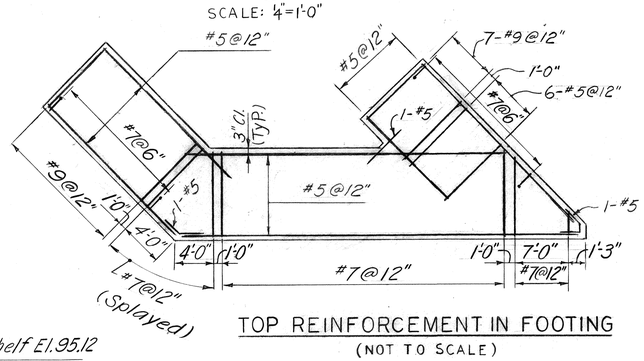

TOP REINFORCEMENT IN FOOTING
(NOT TO SCALE)

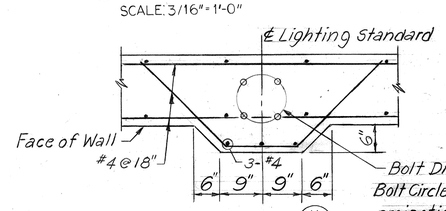

SECTION (U/8)
SCALE: ¾" = 1'-0"

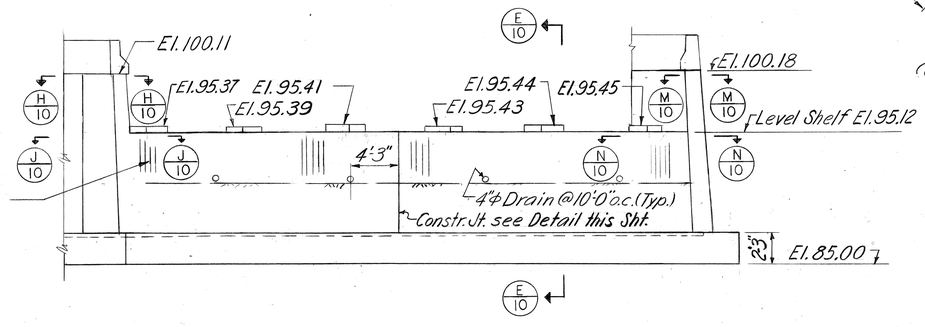

ELEVATION
SCALE: 3/16" = 1'-0"

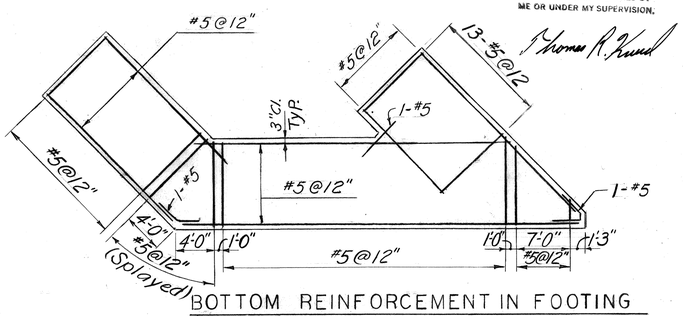

BOTTOM REINFORCEMENT IN FOOTING
(NOT TO SCALE)

THOMAS R. KUESER
REGISTERED PROFESSIONAL ENGINEER
No. 1856
HAWAII, U.S.A.
THIS WORK WAS PREPARED BY ME OR UNDER MY SUPERVISION.
Thomas R. Kueser

NOTES:
1. All Pedestals are Type I for details see Sht. 6S.
2. For location and details of utilities see Sht. 17S
3. For electrical conduit embedded in concrete see Electrical Plans.

STATE OF HAWAII
DEPARTMENT OF TRANSPORTATION
HIGHWAYS DIVISION
HALAWA INTERCHANGE
STRUCTURE NO. 16
ULUNE EXTENSION VIADUCT
EAST ABUTMENT

PROJ. NO. I-HI-1(89):13 DATE: MAY 1971

SCALE: AS SHOWN SHEET No. 8S OF 225 SHEETS

ORIGINAL PLAN		DATE
	SURVEY PLOTTED BY	
	DRAWN BY	12-16-70
	TRACED BY	12-16-70
NOTE BOOK	DESIGNED BY	12-16-70
	QUANTITIES BY	
No.	CHECKED BY	12-16-70

218

FED. ROAD DIST. NO.	STATE	FED. AID PROJ. NO.	FISCAL YEAR	SHEET NO.	TOTAL SHEETS
HAWAII	HAW.	I-HI-1(89):13	1971	219	362

	El. A	El. B
Section (A/9)	89.06	88.34
Section (B/9)	88.44	87.83

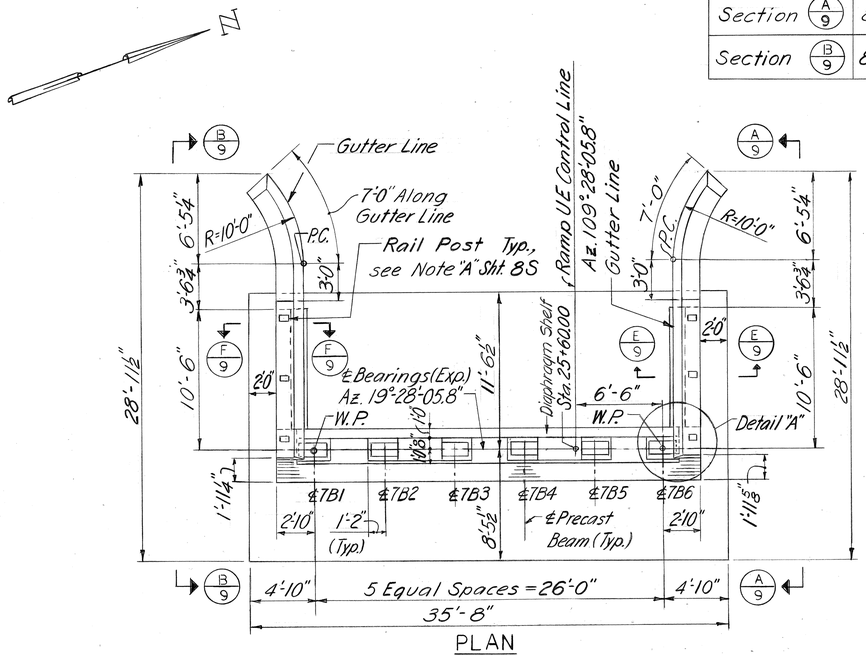

PLAN
Scale: 3/16" = 1'-0"

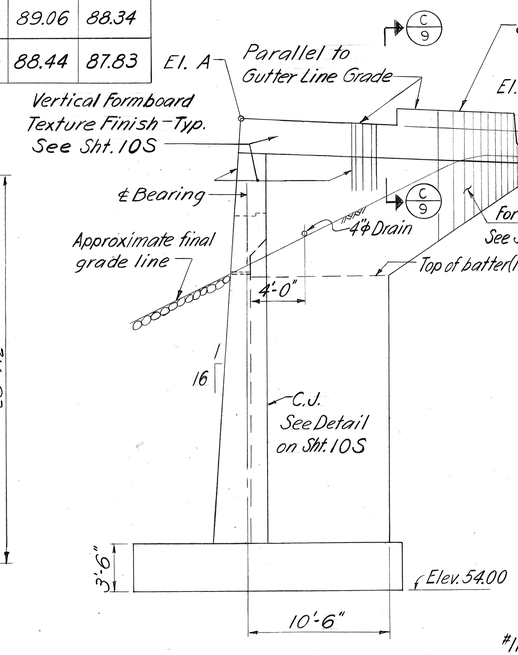

SECTION (A/9) SHOWN
SECTION (B/9) SIMILAR (OPP. HAND)
Scale: 3/16" = 1'-0"

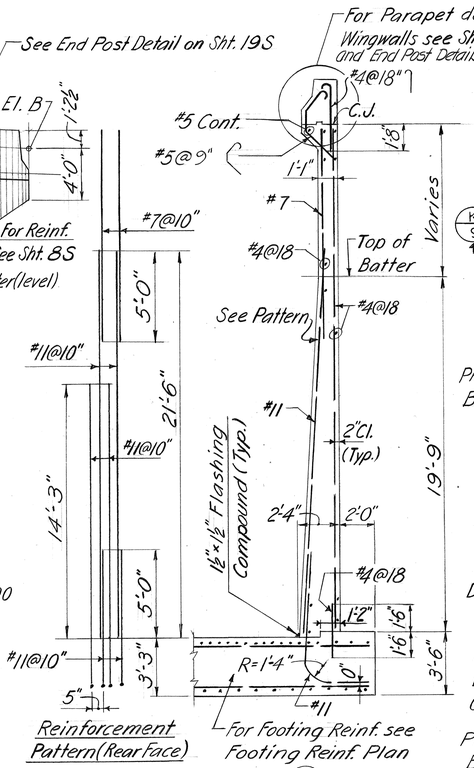

SECTION (E/9) SHOWN
SECTION (F/9) SIMILAR
Scale: 1/4" = 1'-0"

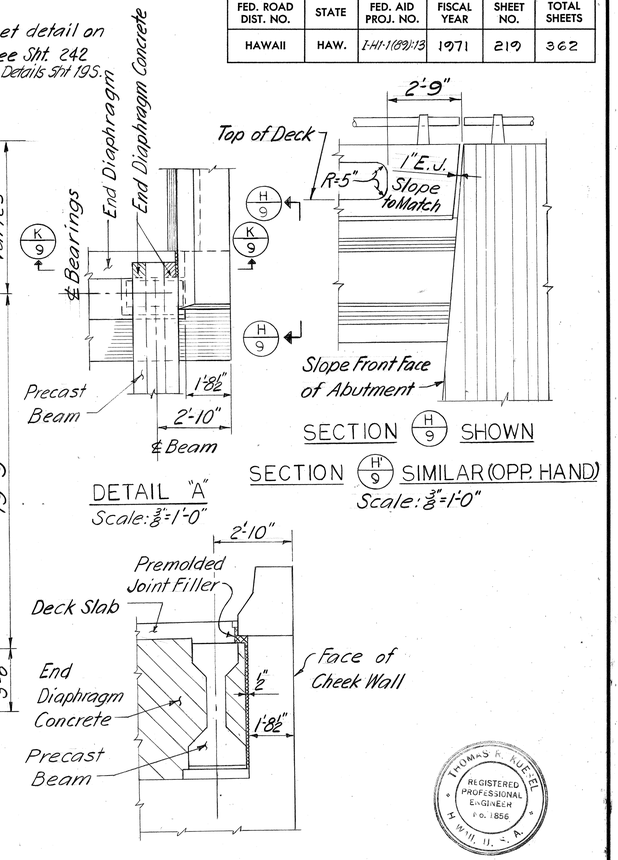

SECTION (K/9)
Scale: 3/8" = 1'-0"

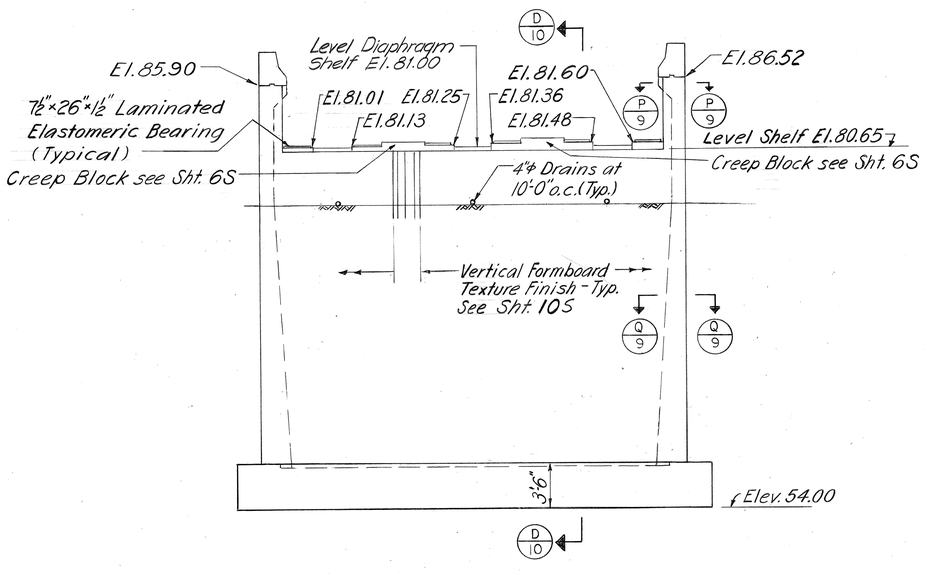

ELEVATION OF WEST ABUTMENT
(Superstructure not shown)
Scale: 3/16" = 1'-0"

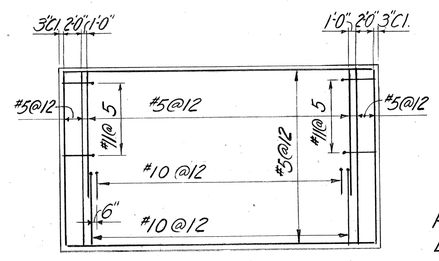

BOTTOM REINFORCEMENT IN FOOTING

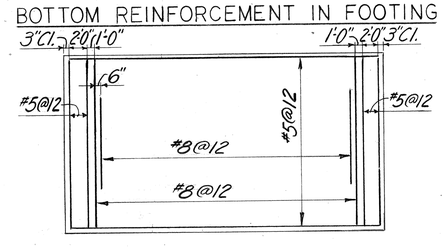

TOP REINFORCEMENT IN FOOTING
Not To Scale

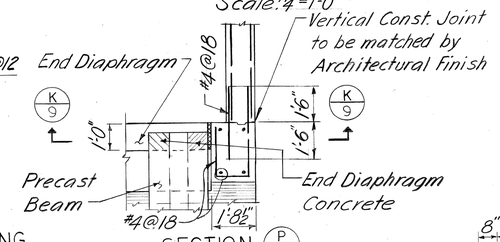

SECTION (P/9)
Scale: 3/8" = 1'-0"

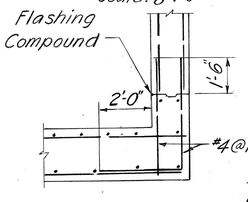

SECTION (Q/9)
Scale: 3/8" = 1'-0"

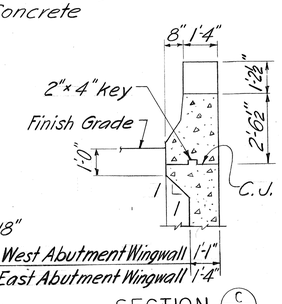

SECTION (C/9)
Scale: 3/8" = 1'-0"

THOMAS K. KUBEL
REGISTERED PROFESSIONAL ENGINEER
No. 1856
HAWAII, U.S.A.

THIS WORK WAS PREPARED BY ME OR UNDER MY SUPERVISION.

NOTES:

1. For location and details of drainage see Sht. 17S
2. Pedestals for Stringers 7B1 & 7B6 — Type II, and pedestals for Stringers 7B2 thru 7B5 — Type IV. For details of pedestals see Sht. 6S.
3. For location and details of utilities see Sht. 17S

ORIGINAL PLAN		DATE
	SURVEY PLOTTED BY	
	DRAWN BY	10-14-70
	TRACED BY	" "
	DESIGNED BY	12-16-70
NOTE BOOK	QUANTITIES BY	" "
	CHECKED BY	12-16-70
No.		

STATE OF HAWAII
DEPARTMENT OF TRANSPORTATION
HIGHWAYS DIVISION

HALAWA INTERCHANGE
STRUCTURE NO. 16
ULUNE EXTENSION VIADUCT
WEST ABUTMENT

PROJ. NO. I-HI-1 (89):13 DATE: MAY 1971

SCALE: AS SHOWN

SHEET No. 9S OF 22S SHEETS

219

FED. ROAD DIST. NO.	STATE	FED. AID PROJ. NO.	FISCAL YEAR	SHEET NO.	TOTAL SHEETS
HAWAII	HAW.	I-HI-1(89):13	1971	220	362

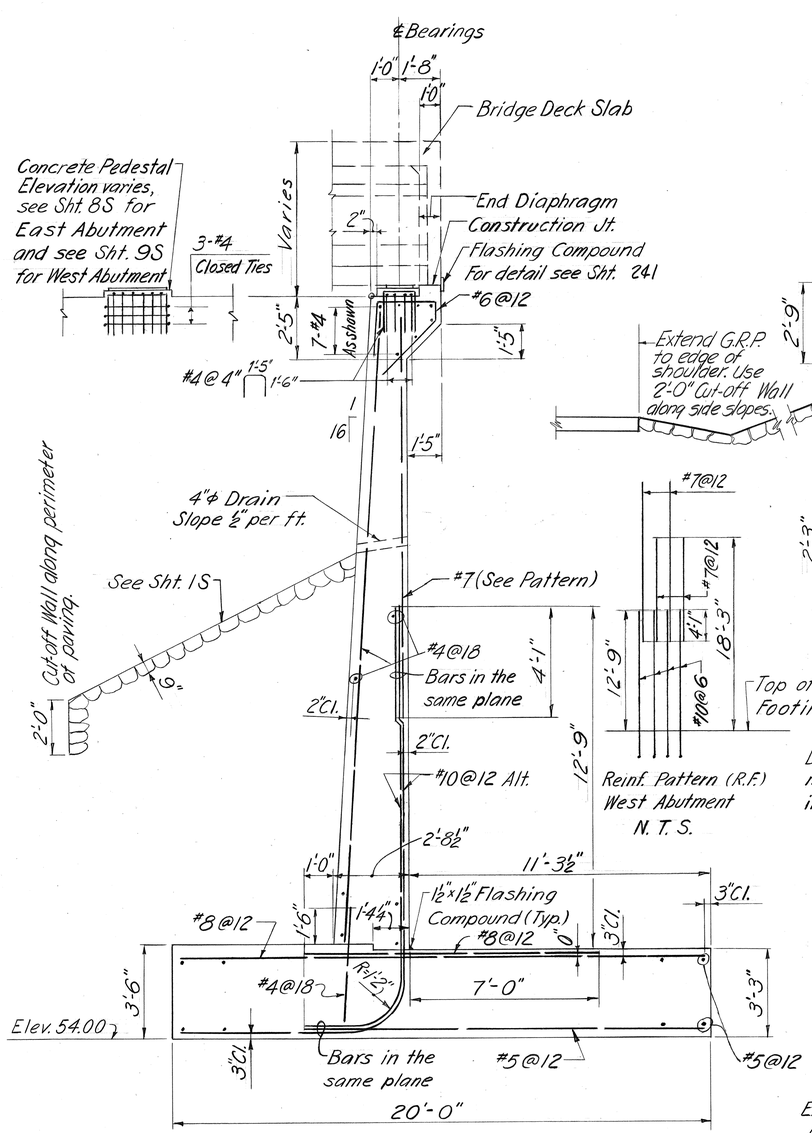

WEST ABUTMENT
SECTION (D/9)

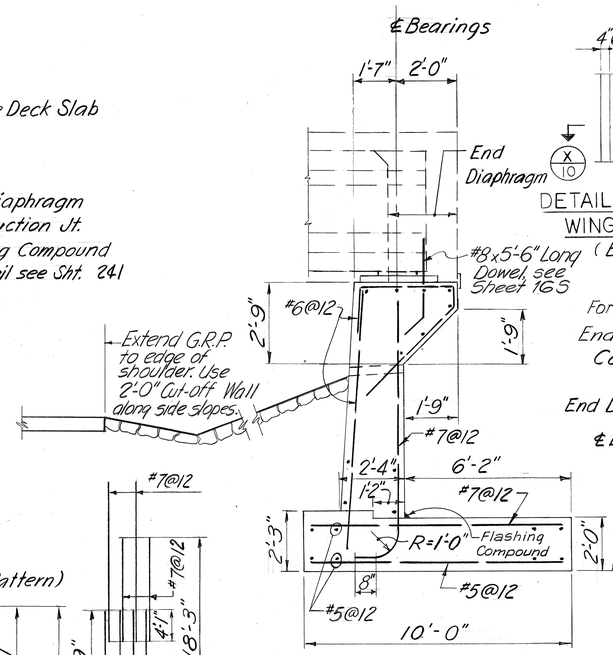

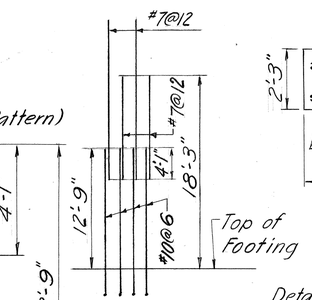

Reinf. Pattern (R.F.)
West Abutment
N. T. S.

EAST ABUTMENT
SECTION (E/8)

Details, Reinforcement & Dimensions not shown or noted are same as in Section (D/9) this sheet

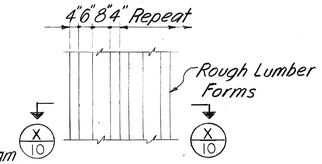

DETAIL OF ABUTMENT AND WINGWALL FINISH
(Board Finish)

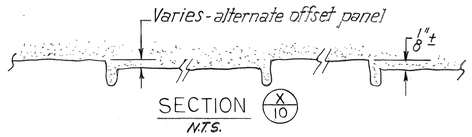

SECTION (X/10)
N.T.S.

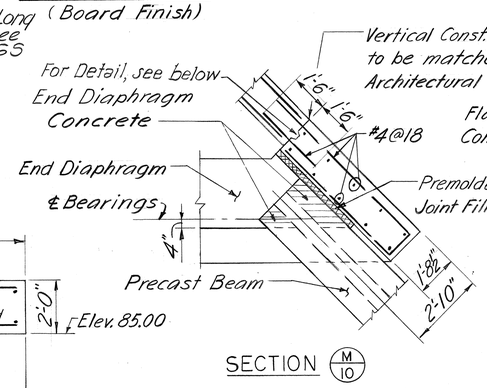

SECTION (M/10)

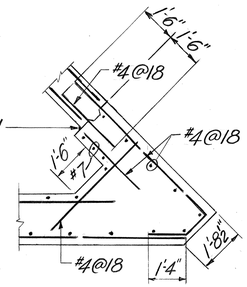

SECTION (N/10)

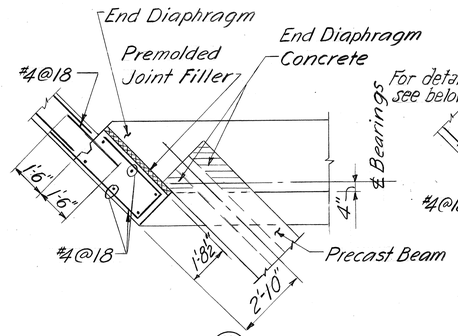

SECTION (H/10)

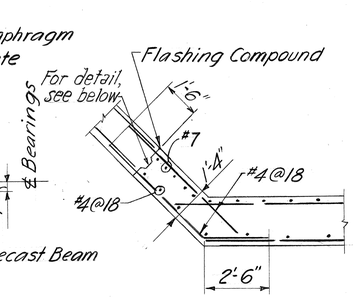

SECTION (J/10)

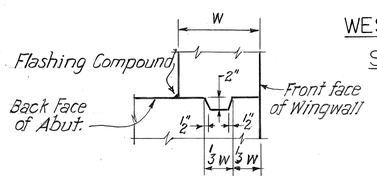

TYPICAL KEY DETAIL

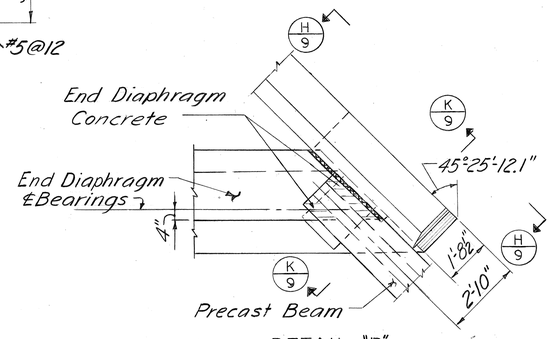

DETAIL "B"

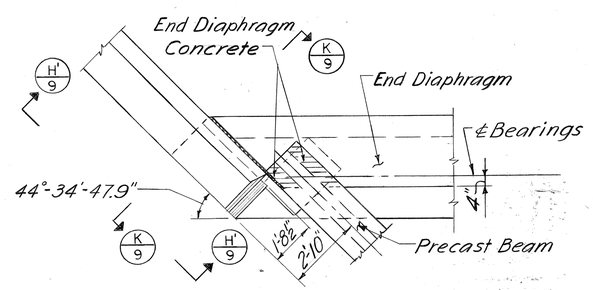

DETAIL "C"

NOTES

1. For West Abutment, Backfill should be placed simultaneously on both sides of Abutment up to Elev. 70.00 and for Wingwalls up to Elev. 78.00.

2. Backfill behind Abutments and Wingwalls shall be placed up to Bridge Seat before erection of the superstructure.

REGISTERED PROFESSIONAL ENGINEER No. 1856 HAWAII, U.S.A.

THIS WORK WAS PREPARED BY ME OR UNDER MY SUPERVISION.

ORIGINAL PLAN		DATE
	SURVEY PLOTTED BY	12-4-70
	DRAWN BY	"
	TRACED BY	12-16-70
NOTE BOOK	DESIGNED BY	"
	QUANTITIES BY	12-16-70
No.	CHECKED BY	"

STATE OF HAWAII
DEPARTMENT OF TRANSPORTATION
HIGHWAYS DIVISION

HALAWA INTERCHANGE
STRUCTURE NO. 16
ULUNE EXTENSION VIADUCT
ABUTMENT DETAILS

PROJ. NO. I-HI-1 (89):13 DATE: MAY 1971

SCALE: 3/8"=1'-0" Unless Noted

SHEET No. 10S OF 225 SHEETS

222 (1)

FED. ROAD DIST. NO.	STATE	FED. AID PROJ. NO.	FISCAL YEAR	SHEET NO.	TOTAL SHEETS
HAWAII	HAW.	I-H1-1(89):13	1971	221	362

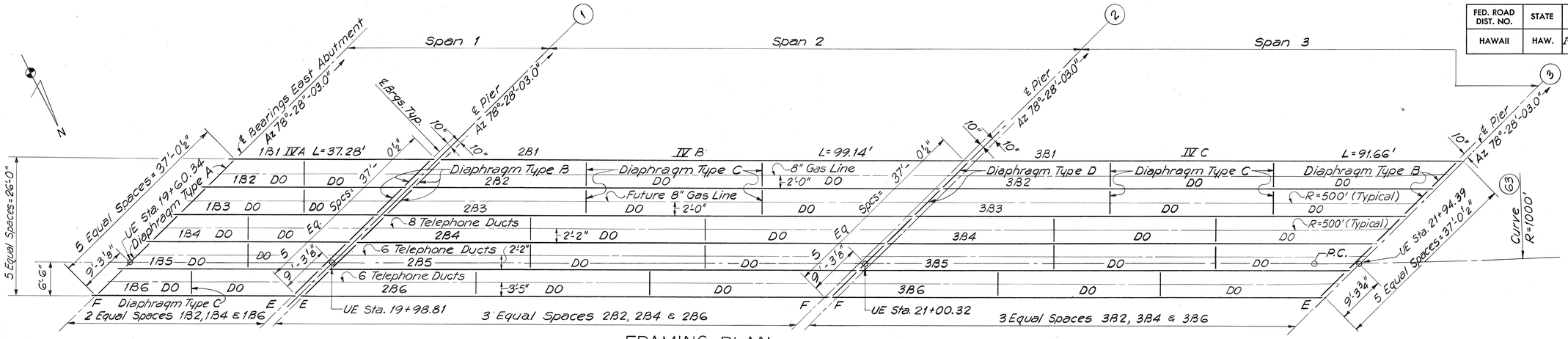

FRAMING PLAN

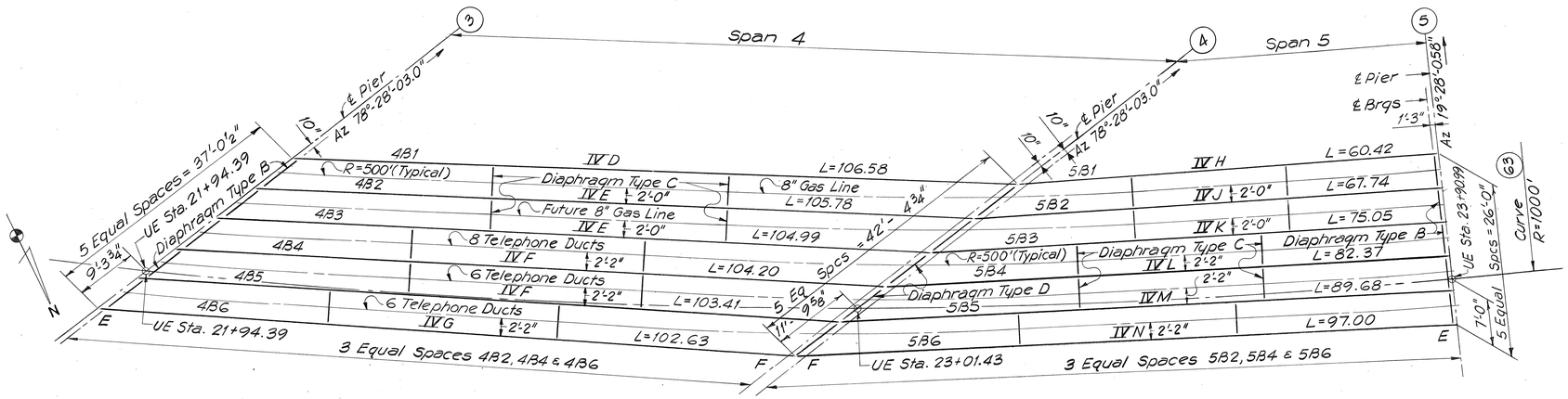

FRAMING PLAN

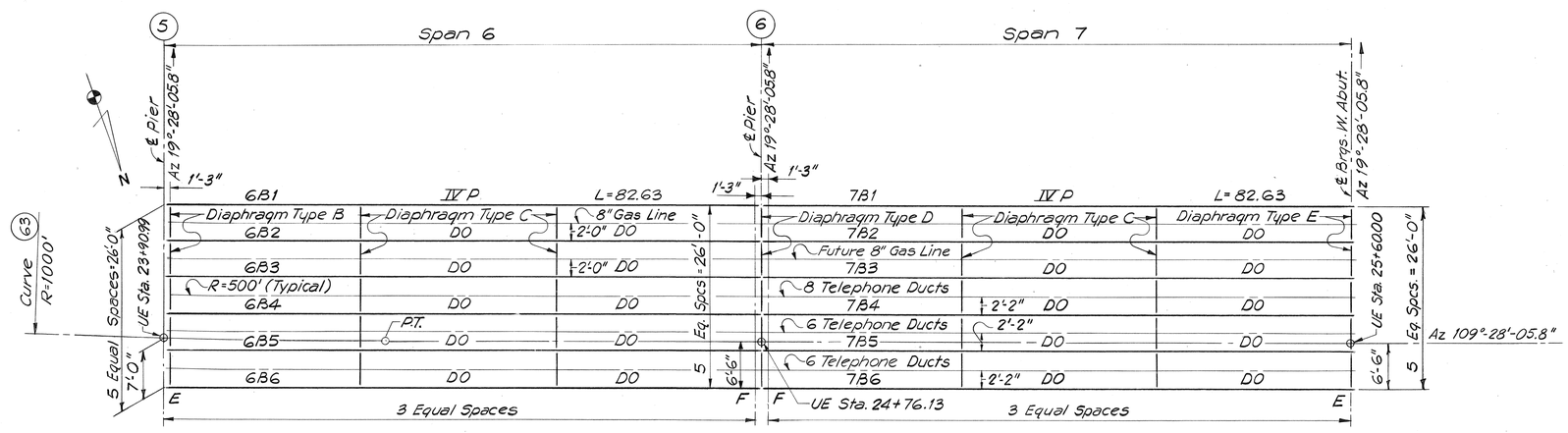

FRAMING PLAN

NOTES:

1. Span length "L" is horizontal distance between bearing centers and does not account for elastic shortening of the beam.
2. For details of Beam Type IV A and Diaphragm Type D see Sht. 12S.
3. For details of Beam Types IV B thru IV P and Diaphragm Type C see Sht. 13S.
4. For details of Diaphragm Types A, B & E see Sht. 16.
5. For Utility Details see Sht. 18S.

ORIGINAL PLAN	
SURVEY PLOTTED BY	
DRAWN BY	
TRACED BY	
DESIGNED BY	
QUANTITIES BY	
CHECKED BY	
NOTE BOOK	
No.	
DATE	

APPROVED:

T. H. Judd 2-8-71
Hawaiian Telephone Co., Ltd. Date

Paul C. Jones Vice Pres. 1-20-71
Honolulu Gas Co. Date

THOMAS K. KUE EL REGISTERED PROFESSIONAL ENGINEER No. 1856 HAWAII U.S.A.

THIS WORK WAS PREPARED BY ME OR UNDER MY SUPERVISION.

Thomas K. Kuel

STATE OF HAWAII
DEPARTMENT OF TRANSPORTATION
HIGHWAYS DIVISION

HALAWA INTERCHANGE
STRUCTURE NO. 16

ULUNE EXTENSION VIADUCT

FRAMING PLAN

PROJ. No. I-H1-1(89):13 DATE: MAY 1971

SHEET No. 11S OF 22S SHEETS

SCALE: 1" = 10'-0"

221

FED. ROAD DIST. NO.	STATE	FED. AID PROJ. NO.	FISCAL YEAR	SHEET NO.	TOTAL SHEETS
HAWAII	HAW.	I-H1-1(89)13	1971	222	362

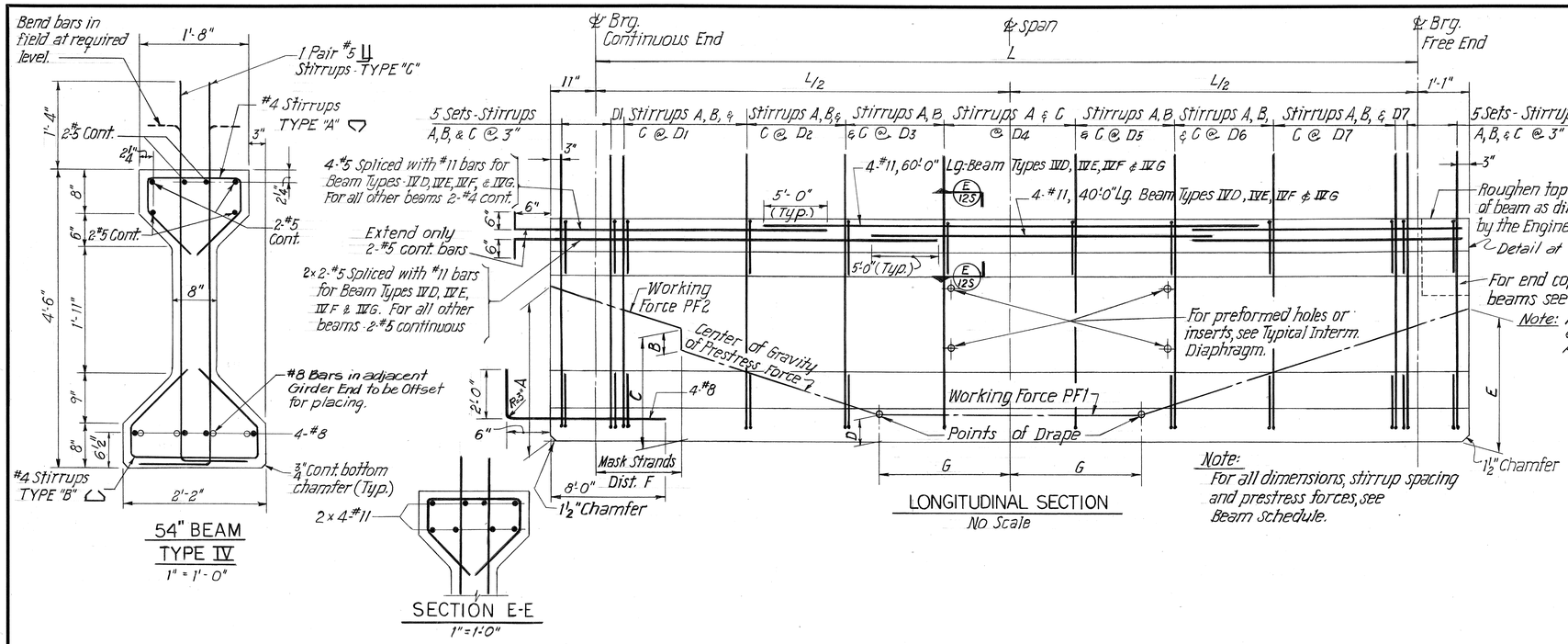

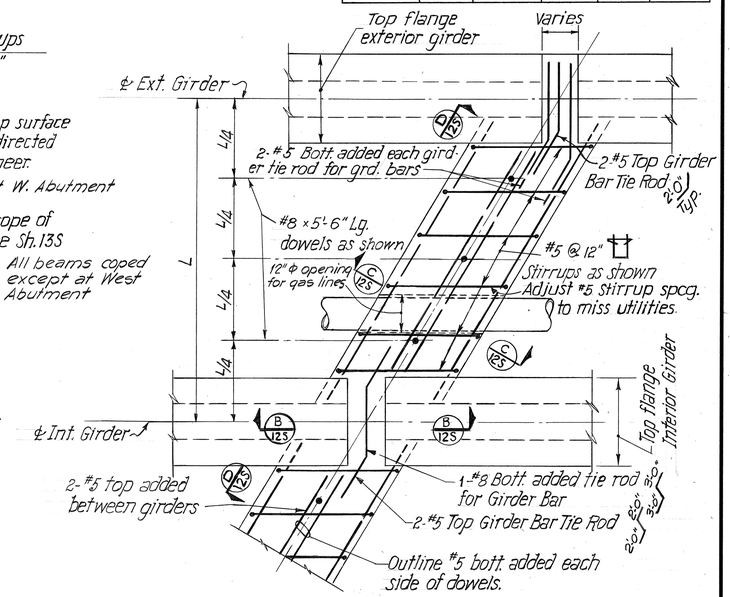

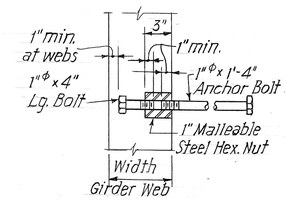

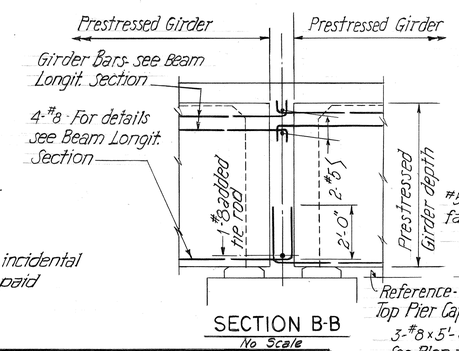

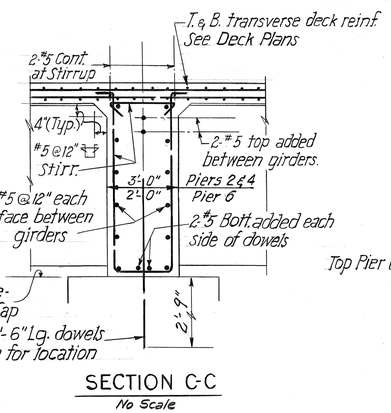

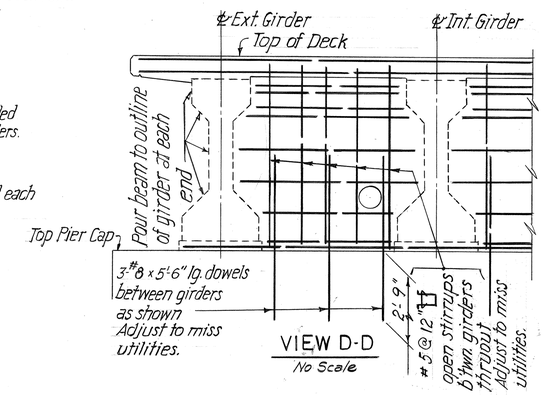

Notes:-

1. For notes pertaining to this sheet see Sh. No. 13S
2. Number of stirrups for "C" bars, indicates number of pairs.

BEAM SCHEDULE

① BEAM TYPE	② WORKING FORCE PF1 (KIPS)	③ WORKING FORCE PF2 (KIPS)	④ CALC. CAMBER (INCHES) (SEE NOTE 5)	⑤ DEAD LOAD DEFLECTION (IN) (SEE NOTE 6)	⑥ LOCATION OF CENTER OF GRAVITY OF PRESTRESS FORCE: DIST. TO PT. OF DRAPE "G"	DIST. TO CHANGE IN CTR. GRAVITY "F"	DIST. "A"	DIST. "B"	DIST. "C"	DIST. "D"	DIST. "E"	⑦ NO. AND SPG. OF STIRRUPS A, B, & C: NO. @ D1	NO. @ D2	NO. AND SPG. OF STIRRUPS A & C: NO. @ D3	SPACING D4	NO. AND SPG. OF STIRRUPS A, B, & C: NO. @ D6	NO. @ D7	⑧ REQUIRED MIN. ULTIMATE CONC. STRENGTH BEFORE RELEASE OF STRANDS (PSI)	⑨ REMARKS
IVB	989.0	707.0	-15/16	1	10'-0"	9'-11"	2'-0 5/16"	5 13/16"	1'-8 13/16"	6"	1'-6 5/16"	7@4 1/2"	9@9"	14@13"	18" Max.	10@18"	6@13"	5@6 1/2"	4000	
IVC	848.0	612.0	-3/4	11/16	9'-0"	9'-2"	1'-10 9/16"	4 3/16"	1'-6 7/16"	6"	1'-5 5/16"	7@5 1/2"	6@11"	10@16"	↑	9@18"	4@15"	5@7 1/2"	↑	
IVD	1083.0	801.0	-1	1 3/8	11'-0"	10'-7 3/4"	2'-2 7/16"	4 3/4"	1'-9 1/4"	6"	1'-8 3/8"	9@4"	11@8"	15@12"		10@18"	7@12"	7@6"		Extra Non-prestressed reinforcement added to Top Flange - See Sect. E-E
IVE	1036.0	754.0	-7/8	1 1/4	11'-0"	10'-7"	2'-1 7/8"	4 3/4"	1'-8 7/8"	6"	1'-7 7/8"	9@4 1/2"	9@9"	13@12"		10@18"	7@12"	7@6"		
IVF	1036.0	754.0	-15/16	1 3/16	10'-0"	10'-5"	2'-1 3/4"	4 3/4"	1'-8 1/2"	6"	1'-7 9/16"	9@4 1/2"	9@9"	14@13"		10@18"	7@12"	7@6"		
IVG	989.0	707.0	-7/8	1 1/8	10'-0"	10'-3"	2'-1 5/8"	4 7/8"	1'-8 5/8"	6"	1'-7 9/16"	9@4 1/2"	9@9"	14@13"		10@18"	6@13"	7@6 1/2"		
IVH	424.0	330.0	-3/16	5/8	6'-0"	6'-0 1/4"	2'-0 5/8"	3 13/16"	1'-7 9/16"	6"	1'-7 9/16"	5@7 1/2"	2@15"	6@18"		5@18"	2@18"	5@9"		
IVJ	518.0	377.0	-1/4	3/16	7'-0"	6'-9 1/4"	2'-1 3/8"	5 1/8"	1'-8 1/2"	6"	1'-7"	5@6 1/2"	3@13"	7@18"		5@18"	3@18"	5@9"		
IVK	612.0	424.0	-3/8	5/16	8'-0"	7'-6"	2'-0 1/4"	5 7/16"	1'-8 7/16"	6"	1'-7 1/2"	7@6"	4@12"	7@18"		8@18"	2@18"	5@9"		
IVL	707.0	565.0	-1/2	7/16	8'-0"	8'-2 3/4"	1'-9"	2 15/16"	1'-5 3/16"	6"	1'-5 3/8"	7@6 1/2"	4@18"	8@18"		8@18"	3@17"	5@8 1/2"		
IVM	801.0	612.0	-5/8	5/8	9'-0"	8'-11 1/2"	1'-10 7/8"	3 9/16"	1'-6 1/16"	6"	1'-6 3/8"	7@5 1/2"	6@11"	10@16"		9@18"	4@15"	5@7 1/2"		
IVN	942.0	707.0	-7/8	7/8	10'-0"	9'-8 3/8"	2'-0 3/4"	4 5/16"	1'-8 1/16"	6"	1'-7 3/8"	9@5"	7@10"	12@14"		8@18"	5@14"	7@7"		
IVP	754.0	612.0	-5/8	7/16	8'-6"	8'-3 1/8"	1'-9 1/2"	2 15/16"	1'-5 9/16"	6"	1'-5 5/8"	7@6 1/2"	4@13"	8@18"	18" Max	8@18"	3@17"	5@8 1/2"	4000	

PRINTED ON NO. 1000H CLEARPRINT

ORIGINAL PLAN	
SURVEY PLOTTED BY	DATE
DRAWN BY	10/16/70
TRACED BY	10/16/70
DESIGNED BY	10/16/70
NOTE BOOK	
QUANTITIES BY	
No.	CHECKED BY

THOMAS R. KUNZE — REGISTERED PROFESSIONAL ENGINEER No. 1656 — HAWAII, U. S. A.

THIS WORK WAS PREPARED BY ME OR UNDER MY SUPERVISION.

Thomas R. Kunze 2-8-71

APPROVED:

Hawaiian Telephone Co., Ltd. Date

Vice Pres. 1-26-71

Honolulu Gas Co. Date

STATE OF HAWAII
DEPARTMENT OF TRANSPORTATION
HIGHWAYS DIVISION

HALAWA INTERCHANGE
STRUCTURE NO. 16
ULUNE EXTENSION VIADUCT

PRESTRESSED BEAM SH. 1

PROJ NO. I-HI-1(89) 13 DATE MAY 1971

SHEET No. 12S OF 225 SHEETS

FED. ROAD DIST. NO.	STATE	FED. AID PROJ. NO.	FISCAL YEAR	SHEET NO.	TOTAL SHEETS
HAWAII	HAW.	I-H1-1(89):13	1971	223	362

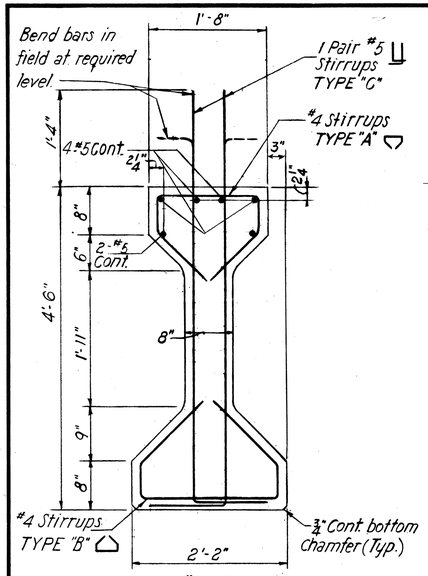

54" BEAM
TYPE IV
1" = 1'-0"

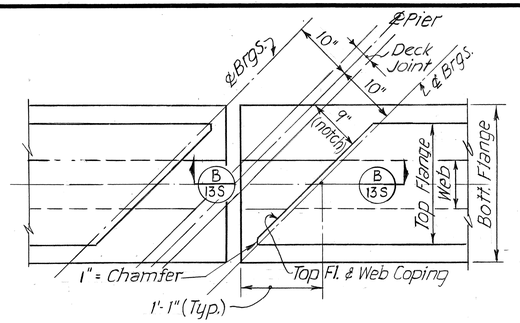

DETAIL AT EXPANSION BRGS.
Scale: 1" = 1'-0"

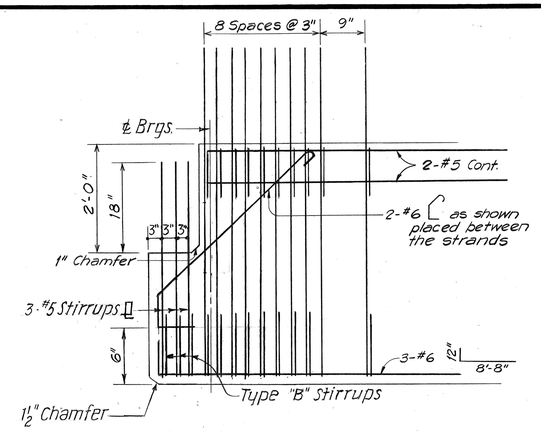

SECTION B-B
No Scale

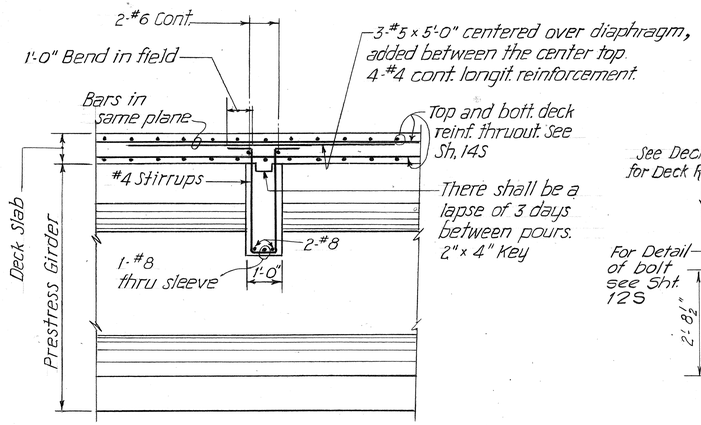

SECTION A-A
No Scale

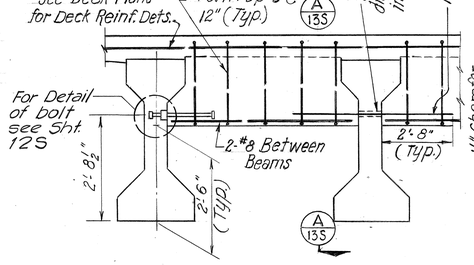

TYPE "C" INTERMEDIATE DIAPHRAGM
No Scale

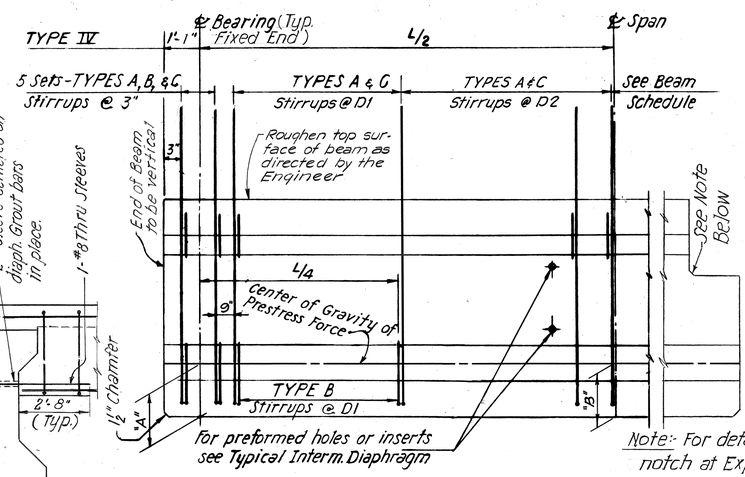

Note:- For details of the notch at Expansion End, see Detail on this sheet.

LONGITUDINAL SECTION
NO Scale

NOTES FOR PRESTRESSED BEAMS

1. Pretensioned strands shall be 7 wire ½"ϕ stress-relieved steel strands (Area = 0.153 in²) with an ultimate strength of 270 KSI. See Specifications.
   Initial Strand Stress = 189 KSI
   Strand Design Stress = 154 KSI
2. Non-prestressed reinforcing steel shall have a yield strength of 40 KSI.
3. Concrete shall have a 28 day strength of 5500 P.S.I.
4. Values of deflection based upon E_{beam} = 3,800,000 P.S.I.
5. The calculated camber includes the effects of the prestress force and the weight of the beam after removal from bed. See Notes 15. & 16
6. The dead load deflection includes the combined effects of the weight of slab, haunch and diaphragm and the superimposed dead loads.
7. Strands on any one line shall be placed symmetrically about ℄ of beam.
8. Strands shall be placed starting on the outside points and shall be uniformly spaced across the beam.
9. Final strand patterns shall be submitted to the Engineer for approval.
10. Bundling of prestressing reinforcement shall comply with the notes and details shown on this drawing.
11. Adjustment of slab haunch for camber shall be determined by the Engineer.
12. Lifting devices, as approved by the Engineer shall be placed close to ℄ bearings. Location to be approved by the Engineer. In no case is a stirrup to be used as a lifting device.
13. See Framing Plans for layout, type, mark numbers, and length of individual girders. See Framing Plan for locations of diaphragms.
14. There shall be no change in the structural capacity of the prestressed girders as shown on the plans.
15. Negative value shown for the calculated camber in the Beam Schedule, indicates a net upward deflection.
16. Camber values shown in Tables assume no losses or any camber growth of the beam.

BEAM SCHEDULE

BEAM TYPE	WORKING FORCE P F (KIPS)	CALC. CAMBER (INCHES) (SEE NOTE 5)	DEAD LOAD DEFLECTION (IN.) (SEE NOTE 6)	LOCATION OF CENTER OF GRAVITY OF PRESTRESS FORCE: DIST. TO PT. OF DRAPE "D"	DIST. "A" (IN)	DIST. "B" (IN)	STIRRUPS TYPE "A" & "C": NO. OF STIRRUPS AT SPCG. D1	SPCG. D2	REQUIRED MIN. ULTIMATE CONC. STRENGTH BEFORE RELEASE OF STRANDS (P.S.I.)	REMARKS
IV A	376.0	-1/16	—	—	1'-1½"	1'-1½"	12 @ 9"	18"	4000	NO DRAPED STRANDS

BUNDLING OF PRESTRESSING REINFORCEMENT

ARRANGEMENT AND CLEARANCE FOR POST TENSIONED UNITS

1. Horizontal clearance between units equals 2" min.
2. Units may be bundled vertically in groups of 3 maximum.
3. Vertical clearance between bundled units equals 3" min.
4. Approval of the Engineer is required for deviation.

ARRANGEMENT AND CLEARANCE FOR PRETENSIONED STRANDS

1. Strands may be bundled in groups as shown or in groups consisting of a maximum of 6 strands and separated at the ends.
2. The minimum distance "S" between groups or individual strands is 2" for ½" strands.
3. "S" is measured between centers of adjacent strands.
4. Approval of the Engineer is required for deviation.

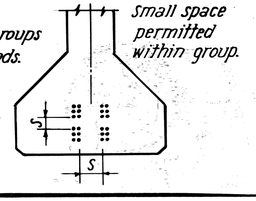

THOMAS N. KUEVER
REGISTERED PROFESSIONAL ENGINEER
No. 1856
HAWAII, U.S.A.

THIS WORK WAS PREPARED BY ME OR UNDER MY SUPERVISION.

Thomas N. Kuever

SCALE: AS SHOWN

STATE OF HAWAII
DEPARTMENT OF TRANSPORTATION
HIGHWAYS DIVISION

HALAWA INTERCHANGE
STRUCTURE NO. 16
ULUNE EXTENSION VIADUCT

PRESTRESSED BEAM SH. 2

PROJ. NO. I-H1-1(89):13 DATE: MAY 1971

SHEET No. 13S OF 225 SHEETS

ORIGINAL PLAN		DATE
SURVEY PLOTTED BY		
DRAWN BY		10/16/72
TRACED BY		10/16/72
DESIGNED BY		10/16/72
QUANTITIES BY		
CHECKED BY		10/16/72
NOTE BOOK		
No.		

PRINTED ON NO. 1000H CLEARPRINT

FED. ROAD DIST. NO.	STATE	FED. AID PROJ. NO.	FISCAL YEAR	SHEET NO.	TOTAL SHEETS
HAWAII	HAW.	I-H1-1(89):13	1971	224	362

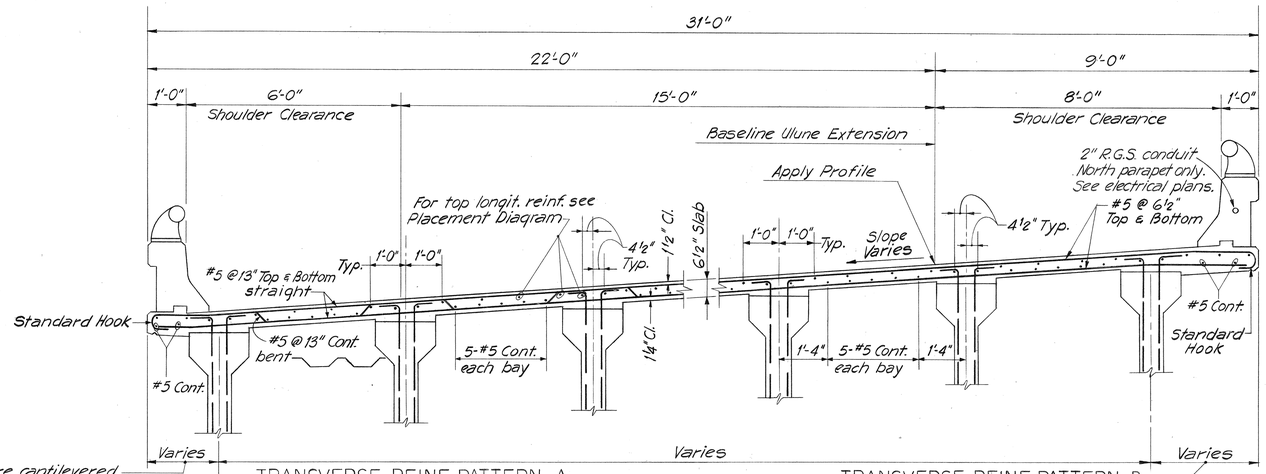

TRANSVERSE REINF. PATTERN A
(All of Spans 6 & 7 and center portion of Spans 2 & 3)

TYPICAL SECTIONS
SCALE: 1/2" = 1'-0"
(Looking Upstation)

TRANSVERSE REINF. PATTERN B
(All of Spans 1, 4 & 5 and ends of Spans 2 & 3)

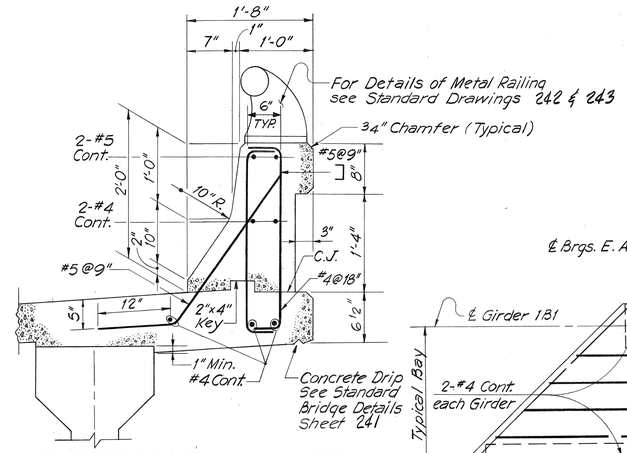

CONCRETE BRIDGE RAILING DETAIL
SCALE: 1" = 1'-0"

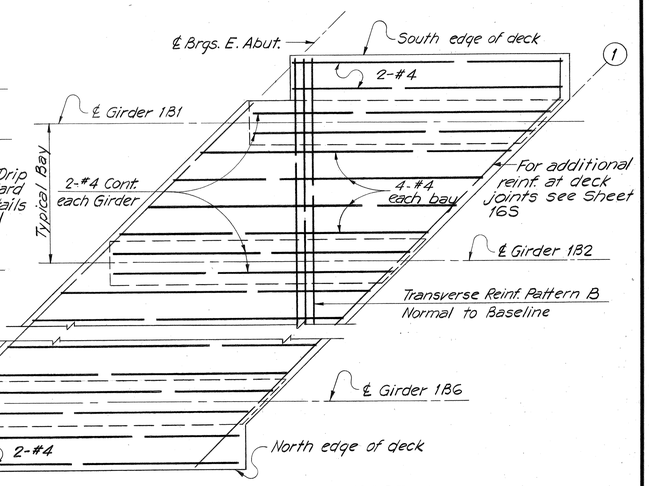

PLACEMENT DIAGRAM - DECK SLAB TOP LONGITUDINAL REINFORCEMENT
SPAN 1
SCALE: 1/8" = 1'-0" HORIZ.
3/8" = 1'-0" VERT.

NOTE "A"

Water reducing or retarding admixture conforming to AASHO Designation: M194 Type D, shall be added to the deck concrete over the pier within the indicated lines. The type of admixture shall be such that the dosage used will produce the retardation required. The type and dosage of the admixture, and the method of pour shall be approved by the Engineer. For details of transverse deck construction joint at these locations see Sht. 21S.

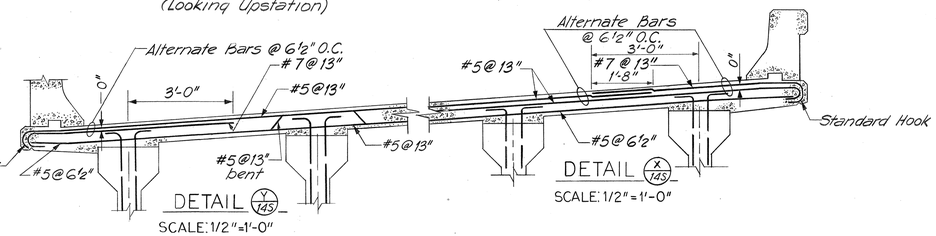

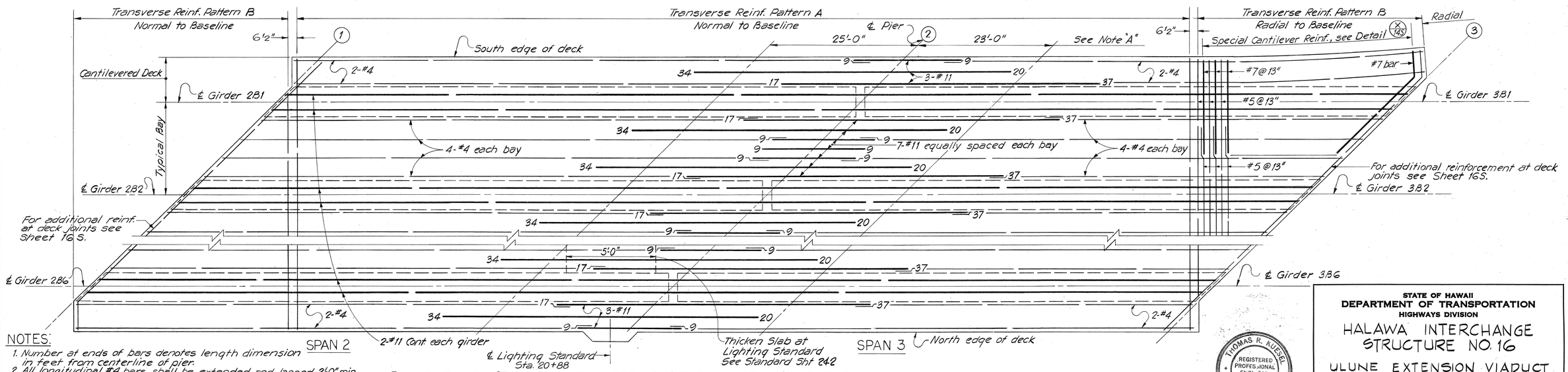

PLACEMENT DIAGRAM - DECK SLAB TOP LONGITUDINAL REINFORCEMENT
SPANS 2 & 3
SCALE: 1/8" = 1'-0" HORIZ.
3/8" = 1'-0" VERT.

NOTES:

1. Number at ends of bars denotes length dimension in feet from centerline of pier.
2. All longitudinal #4 bars shall be extended and lapped 2'-0" min. with the adjacent #11 bars as shown.
3. For additional slab reinforcement details see Typical Section this sheet.
4. For additional reinforcement at Lighting Standard see Standard Sht 242
5. For additional reinforcement at Drainage Scuppers see Sht 17S.
6. For additional reinforcement at Intermediate Diaphragms Type C see Sht 13S.
7. For additional reinforcement at End Diaphragms Type D see Sht 12S.

ORIGINAL PLAN		DATE
	SURVEY PLOTTED BY	
	DRAWN BY	"
	TRACED BY	"
	DESIGNED BY	"
NOTE BOOK	QUANTITIES BY	"
No.	CHECKED BY	"

THOMAS R. KUESEL
REGISTERED PROFESSIONAL ENGINEER
No. 4856
HAWAII, U.S.A.

THIS WORK WAS PREPARED BY ME OR UNDER MY SUPERVISION.

STATE OF HAWAII
DEPARTMENT OF TRANSPORTATION
HIGHWAYS DIVISION

HALAWA INTERCHANGE
STRUCTURE NO. 16
ULUNE EXTENSION VIADUCT
DECK REINFORCEMENT SHT. 1

PROJ. No. I-H1-1(89):13 DATE: MAY 1971

SHEET No. 14S OF 225 SHEETS

FED. ROAD DIST. NO.	STATE	FED. AID PROJ. NO.	FISCAL YEAR	SHEET NO.	TOTAL SHEETS
HAWAII	HAW.	I-H1-1(89):13	1971	225	362

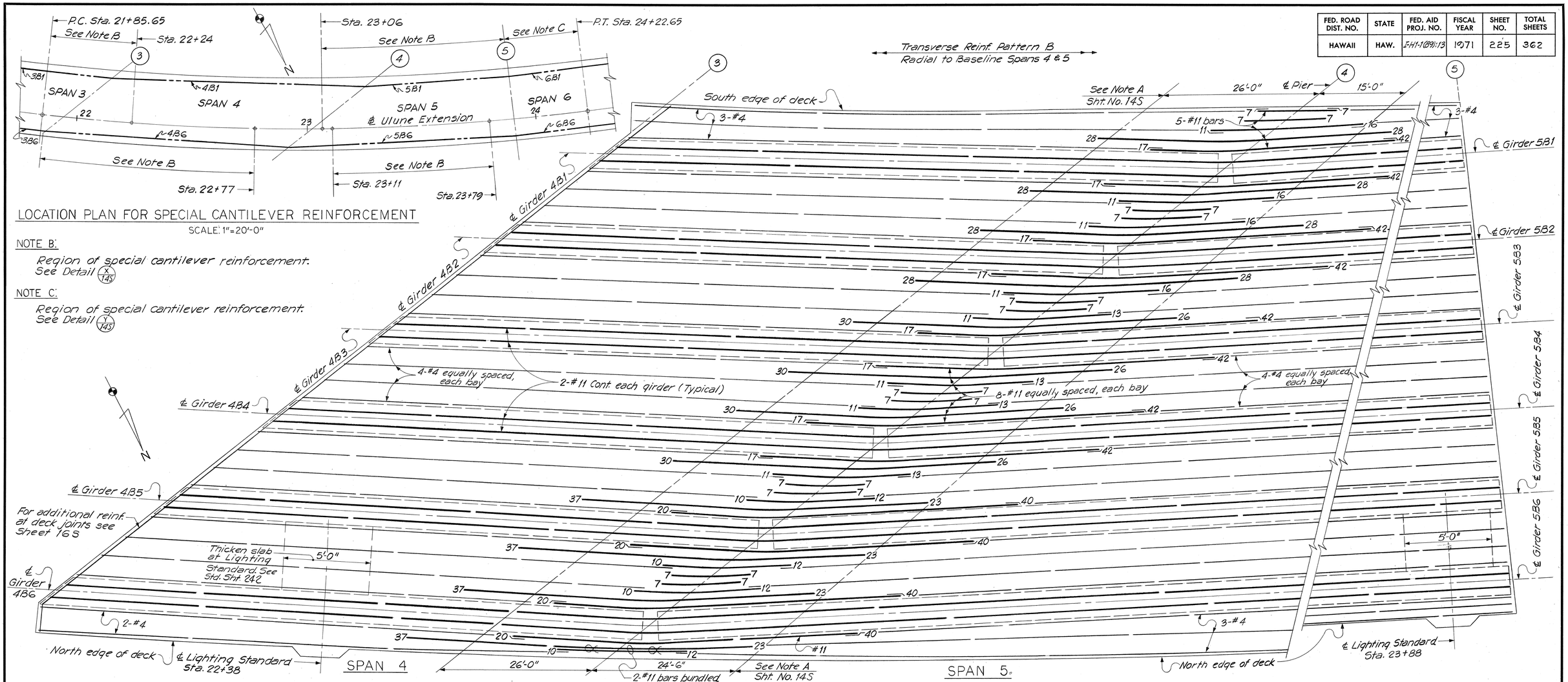

LOCATION PLAN FOR SPECIAL CANTILEVER REINFORCEMENT

SCALE: 1"=20'-0"

NOTE B:

Region of special cantilever reinforcement. See Detail X/14S

NOTE C:

Region of special cantilever reinforcement. See Detail Y/14S

PLACEMENT DIAGRAM - DECK SLAB TOP LONGITUDINAL REINFORCEMENT - SPANS 4 & 5 - SCALE: 1/8"=1'-0" HORIZ., 3/8"=1'-0" VERT.

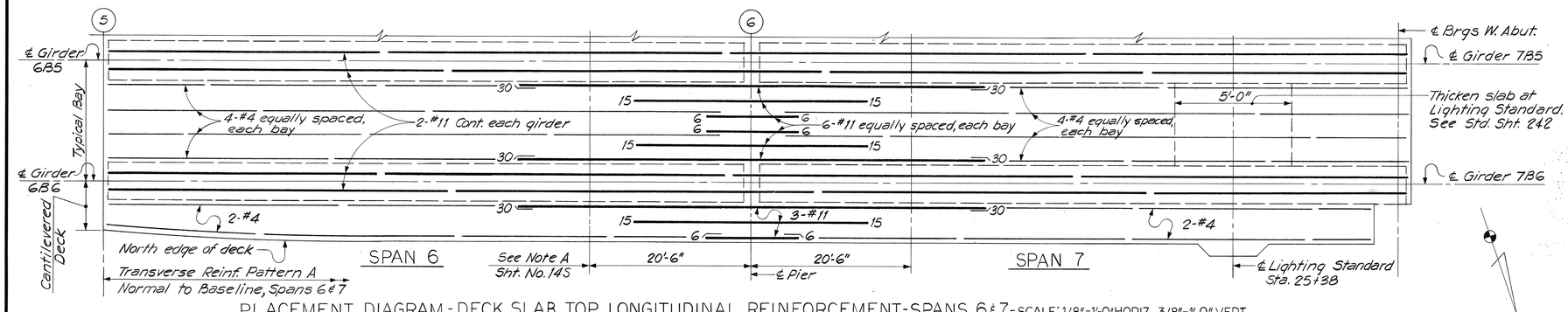

PLACEMENT DIAGRAM - DECK SLAB TOP LONGITUDINAL REINFORCEMENT - SPANS 6 & 7 - SCALE: 1/8"=1'-0" HORIZ., 3/8"=1'-0" VERT.

NOTES:

1. See Sheet No. 14S for notes.

THOMAS K. NUESE
REGISTERED PROFESSIONAL ENGINEER
NO. 1856
HAWAII, U.S.A.

THIS WORK WAS PREPARED BY ME OR UNDER MY SUPERVISION.

Thomas K. Nuese

STATE OF HAWAII
DEPARTMENT OF TRANSPORTATION
HIGHWAYS DIVISION

HALAWA INTERCHANGE
STRUCTURE NO. 16

ULUNE EXTENSION VIADUCT
DECK REINFORCEMENT SHT. 2

PROJ. NO. I-H1-1(89):13 DATE: MAY 1971

SHEET No. 155 OF 225 SHEETS

ORIGINAL PLAN		DATE
	SURVEY PLOTTED BY	
	DRAWN BY	
	TRACED BY	
	DESIGNED BY	
NOTE BOOK	QUANTITIES BY	
No.	CHECKED BY	

PRINTED ON NO. 1000H CLEARPRINT

FED. ROAD DIST. NO.	STATE	FED. AID PROJ. NO.	FISCAL YEAR	SHEET NO.	TOTAL SHEETS
HAWAII	HAW.	I-H1-1(89):13	1971	226	362

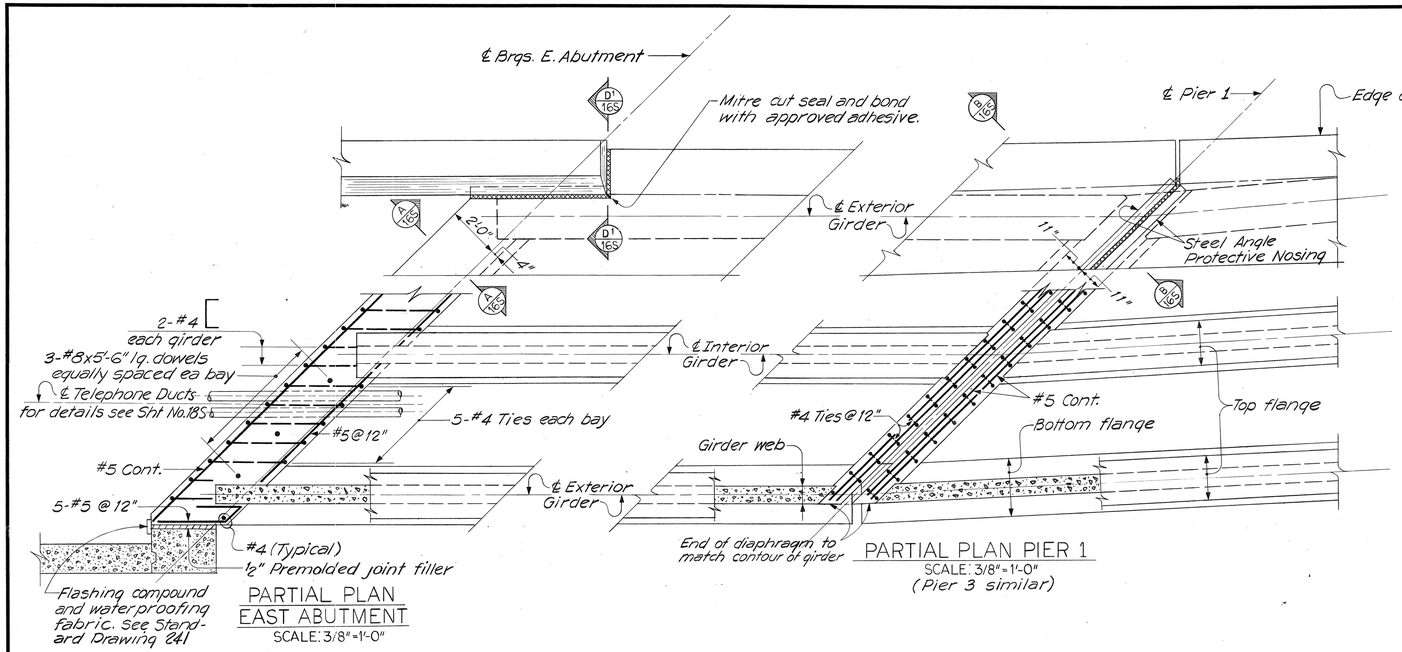

PARTIAL PLAN EAST ABUTMENT
SCALE: 3/8"=1'-0"

PARTIAL PLAN PIER 1
SCALE: 3/8"=1'-0"
(Pier 3 similar)

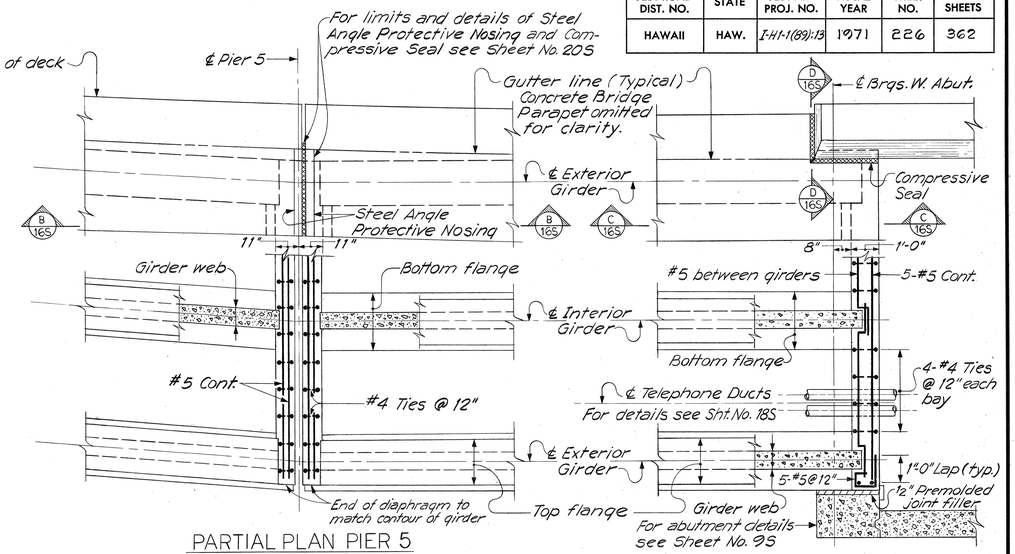

PARTIAL PLAN PIER 5
SCALE: 3/8"=1'-0"

PARTIAL PLAN WEST ABUTMENT
SCALE: 3/8"=1'-0"

USE OF COMPRESSIVE JOINT SEALS		
PIER NO.	SIZE	DIM. "X"
1	8 7	1¼"
3	8 5	1½"
5	4	1"

For additional dimensions see Sht. 20S

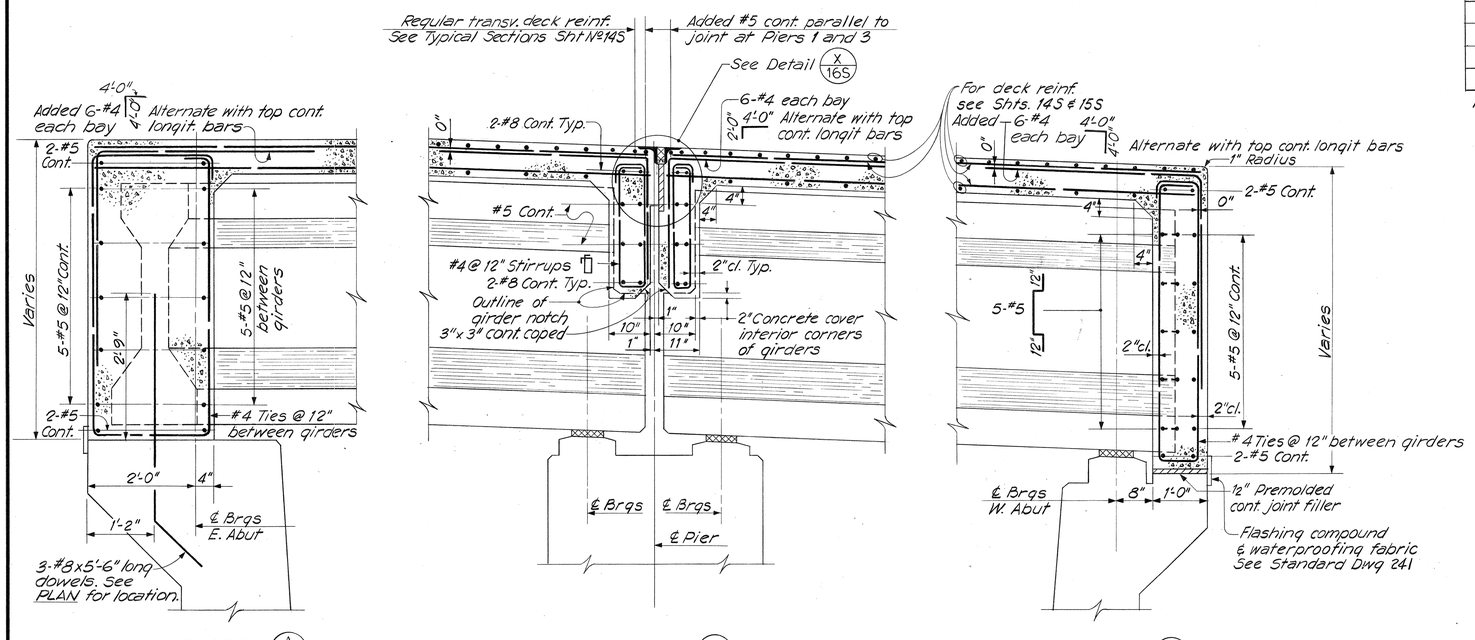

SECTION A 16S
END DIAPHRAGM TYPE A
SCALE: 3/4"=1'-0"

SECTION B 16S
END DIAPHRAGM TYPE B
SCALE: 3/4"=1'-0"

SECTION C 16S
END DIAPHRAGM TYPE C
SCALE: 3/4"=1'-0"

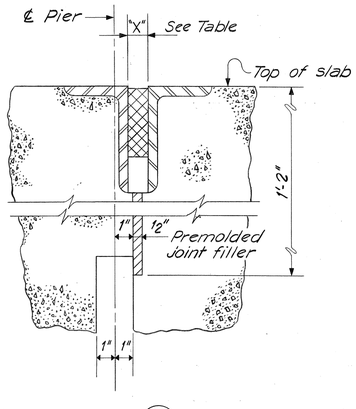

DETAIL X 16S
SCALE: 3"=1'-0"

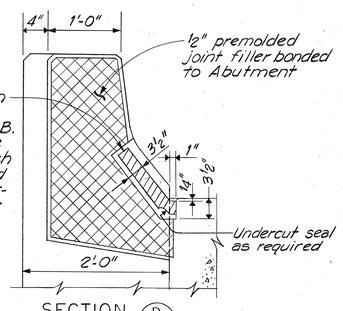

SECTION D 16S
SCALE: 1"=1'-0"
Section (D') similar except opposite hand.

APPROVED:

T. H. Quill 1-8-71
Hawaiian Telephone Co., Ltd. Date

Paul C. Jog Vice Pres. 1-22-71
Honolulu Gas Co. Date

THOMAS R. KUESEL REGISTERED PROFESSIONAL ENGINEER No. 1856 HAWAII, U.S.A.

THIS WORK WAS PREPARED BY ME OR UNDER MY SUPERVISION.

Thomas R. Kuesel

STATE OF HAWAII
DEPARTMENT OF TRANSPORTATION
HIGHWAYS DIVISION

HALAWA INTERCHANGE
STRUCTURE NO. 16

ULUNE EXTENSION VIADUCT
DECK & DIAPHRAGM DETAILS

PROJ. No. I-H1-1(89):13 DATE: MAY 1971

SHEET No. 16S OF 22S SHEETS

ORIGINAL PLAN | SURVEY PLOTTED BY | DRAWN BY | TRACED BY | DESIGNED BY | QUANTITIES BY | CHECKED BY | DATE | NOTE BOOK | No.

FED. ROAD DIST. NO.	STATE	FED. AID PROJ. NO.	FISCAL YEAR	SHEET NO.	TOTAL SHEETS
HAWAII	HAW.	I-HI-1(89)13	1971	227	362

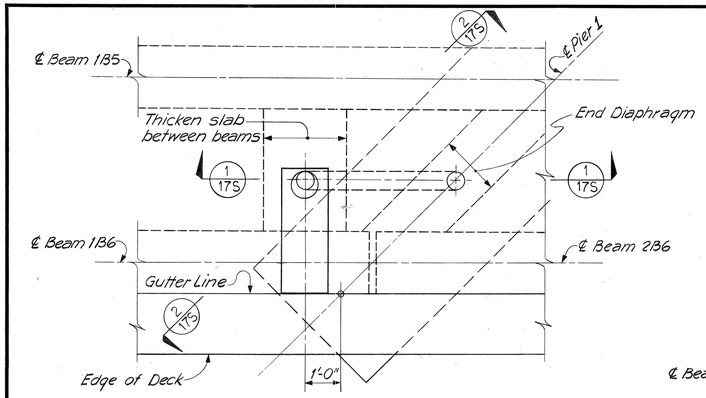

DRAINAGE AT PIER 1
1/2" = 1'-0"

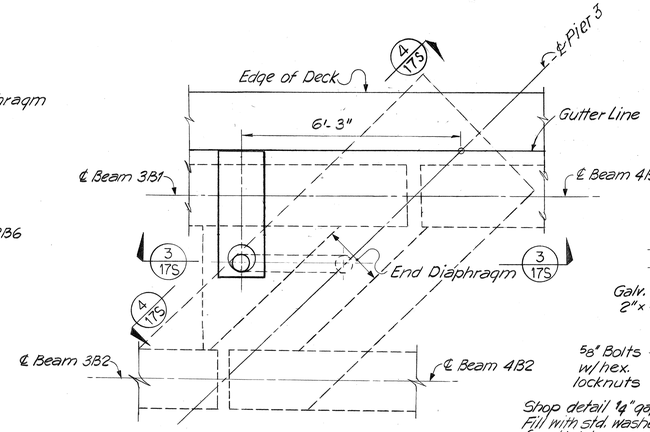

DRAINAGE AT PIER 3
1/2" = 1'-0"

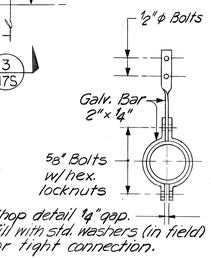

PIPE HANGER DETAIL
1" = 1'-0"

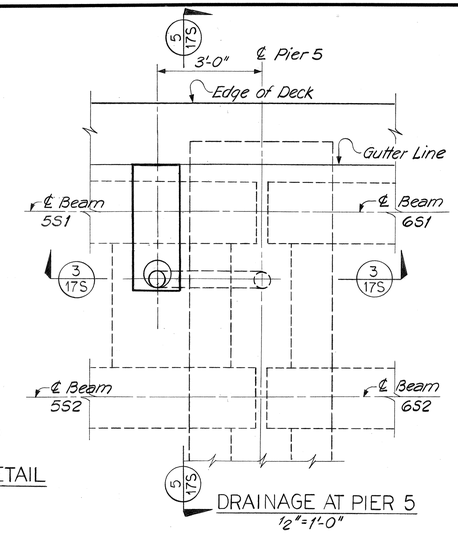

DRAINAGE AT PIER 5
1/2" = 1'-0"

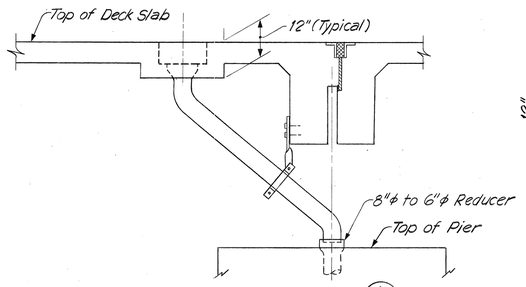

SECTION 1/17S
1/2" = 1'-0"

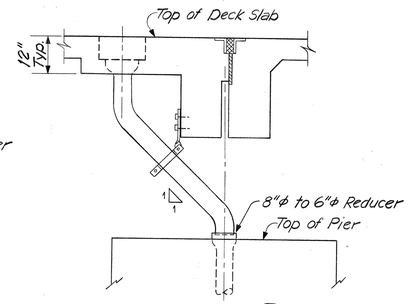

SECTION 3/17S
1/2" = 1'-0"

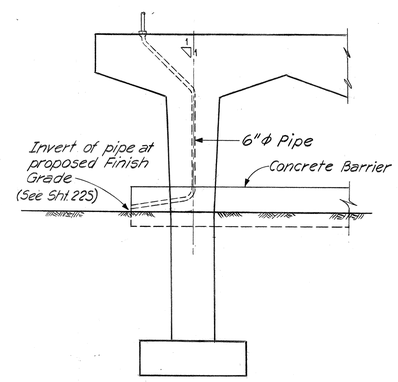

SECTION 4/17S
1/8" = 1'-0"

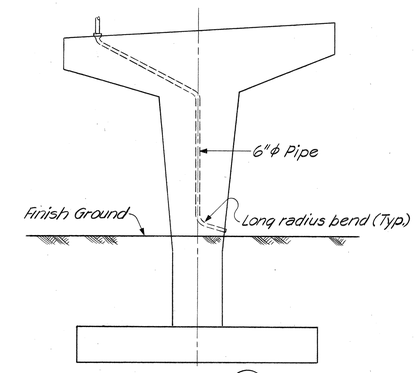

SECTION 5/17S
1/8" = 1'-0"

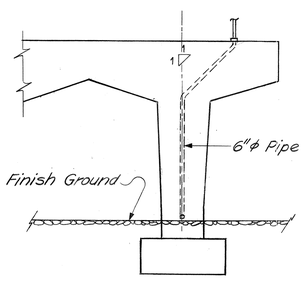

SECTION 2/17S
1/8" = 1'-0"

Notes:

1. All pipe and fittings to be 6"ϕ standard galv. steel A.S.T.M. A120 (welded type fittings to be A.S.T.M. A234 galv.)
2. Deck drains, grates and frames including cap screws and washers shall be galv. after fabrication is complete in accordance with the standard specifications.
3. All pipes, deck drains, hangers and miscellaneous fasteners are included for payment with the item "Concrete in Structure No. 16 Except Footings."

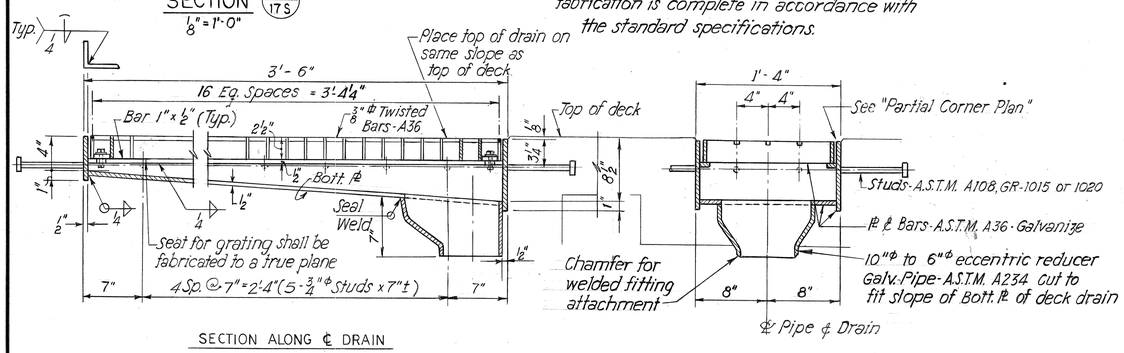

SECTION ALONG ℄ DRAIN

TYPE "A" DECK DRAIN GRATE & FRAME (5 REQ'D.)
1 1/2" = 1'-0"

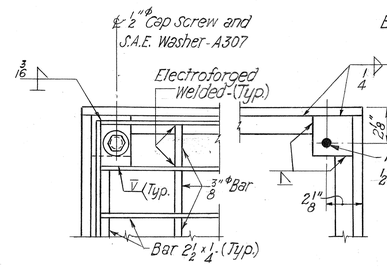

PARTIAL CORNER PLAN
3" = 1'-0"

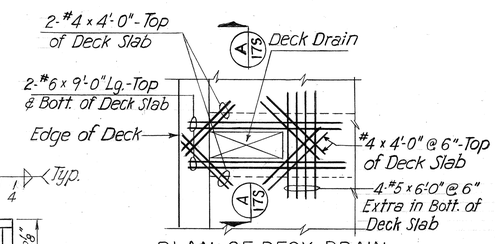

PLAN OF DECK DRAIN
N.T.S.

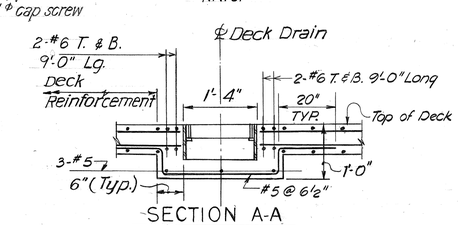

SECTION A-A
3/4" = 1'-0"

THIS WORK WAS PREPARED BY ME OR UNDER MY SUPERVISION.

Thomas R. Kuesel

STATE OF HAWAII
DEPARTMENT OF TRANSPORTATION
HIGHWAYS DIVISION

HALAWA INTERCHANGE
STRUCTURE NO. 16
ULUNE EXTENSION VIADUCT

DRAINAGE DETAILS

PROJ. NO. I-HI-1(89)13 DATE: MAY 1971

SHEET No. 17S OF 22S SHEETS

ORIGINAL PLAN	SURVEY PLOTTED BY	DATE
	DRAWN BY S.S.	10/16/70
	TRACED BY "	"
NOTE BOOK	DESIGNED BY "	"
	QUANTITIES BY "	10/16/70
No.	CHECKED BY Hijiya	

FED. ROAD DIST. NO.	STATE	FED. AID PROJ. NO.	FISCAL YEAR	SHEET NO.	TOTAL SHEETS
HAWAII	HAW.	I-H1-1(89):13	1971	228	362

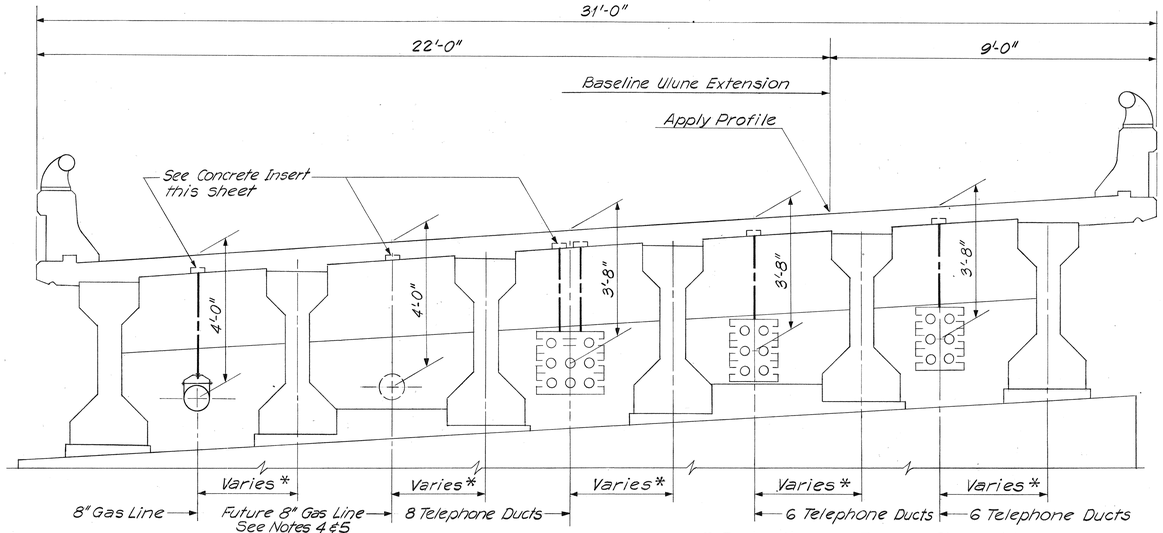

* For location see Framing Plans, Sht. 115

TYPICAL SECTION
Looking Upstation
SCALE: 1/2" = 1'-0"

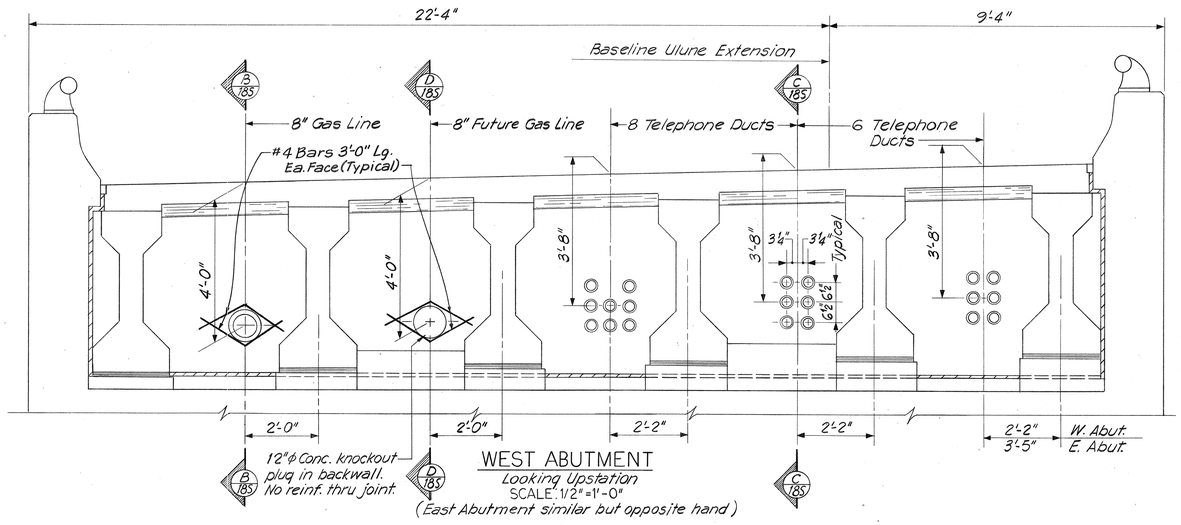

WEST ABUTMENT
Looking Upstation
SCALE: 1/2" = 1'-0"
(East Abutment similar but opposite hand)

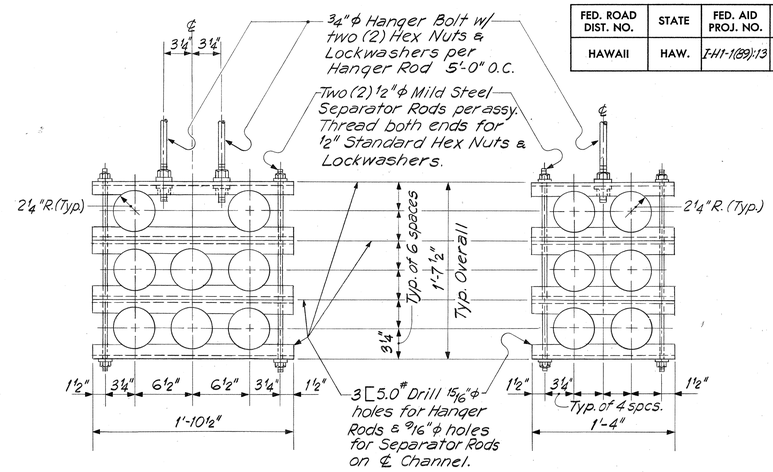

8 TELEPHONE DUCTS
SCALE: 1 1/2" = 1'-0"

6 TELEPHONE DUCTS
SCALE: 1 1/2" = 1'-0"

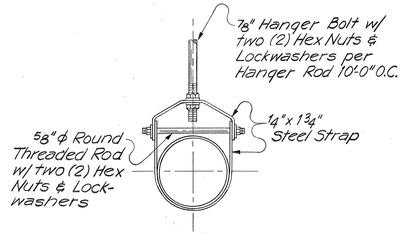

8" GAS LINE
SCALE: 1 1/2" = 1'-0"

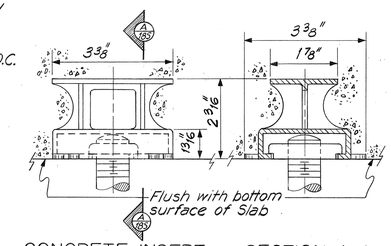

CONCRETE INSERT SECTION A-A
SCALE: 6" = 1'-0"

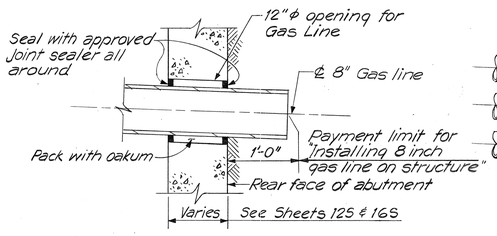

SECTION B-B
SCALE: 1" = 1'-0"

Note: Sections B-B & C-C apply to Diaphragm Type D at Piers 2, 4 & 6

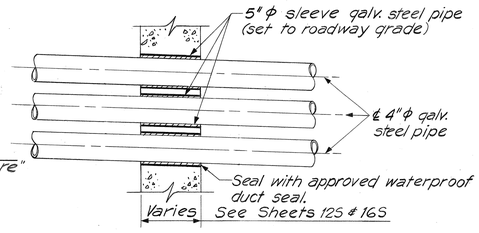

SECTION C-C
SCALE: 1" = 1'-0"

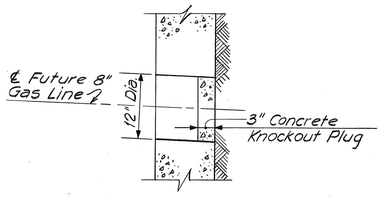

SECTION D-D
SCALE: 1" = 1'-0"

NOTES:

1. All metal shown on this sheet will be hot dip galvanized except as noted.
2. Spacing of all hangers to be at 5'-0" O.C. max. unless noted.
3. All telephone ducts are 4"φ galvanized steel pipe which are to be furnished by the Hawaiian Telephone Company and are to be installed by the Contractor.
4. All hanger assemblies including inserts are to be furnished and installed by the Contractor, including inserts for future 8" Gas Line.
5. Provide 12"φ opening for future Gas Line in Diaphragm Type D at Piers 2, 4 & 6.

THOMAS R. KUESEL REGISTERED PROFESSIONAL ENGINEER No. 1856 HAWAII, U.S.A.

THIS WORK WAS PREPARED BY ME OR UNDER MY SUPERVISION.

Thomas R. Kuesel

APPROVED:

F. H. Judd 2-8-71
Hawaiian Telephone Co., Ltd. Date

Paul C. Jay Vice Pres. 2-25-71
Honolulu Gas Co. Date

STATE OF HAWAII
DEPARTMENT OF TRANSPORTATION
HIGHWAYS DIVISION

HALAWA INTERCHANGE STRUCTURE NO. 16

ULUNE EXTENSION VIADUCT

UTILITY DETAILS

PROJ. No. I-H1-1(89):13 DATE: MAY 1971

SHEET No. 185 OF 225 SHEETS

ORIGINAL PLAN	SURVEY PLOTTED BY	DATE
	DRAWN BY	
	TRACED BY	
	DESIGNED BY	
NOTE BOOK	QUANTITIES BY	
No.	CHECKED BY	

FED. ROAD DIST. NO.	STATE	FED. AID PROJ. NO.	FISCAL YEAR	SHEET NO.	TOTAL SHEETS
HAWAII	HAW.	I-H1-1(89):13	1971	229	362

CURVE DATA
Δ = 40°06'-25"
R = 10.0'
Lc = 7.0'

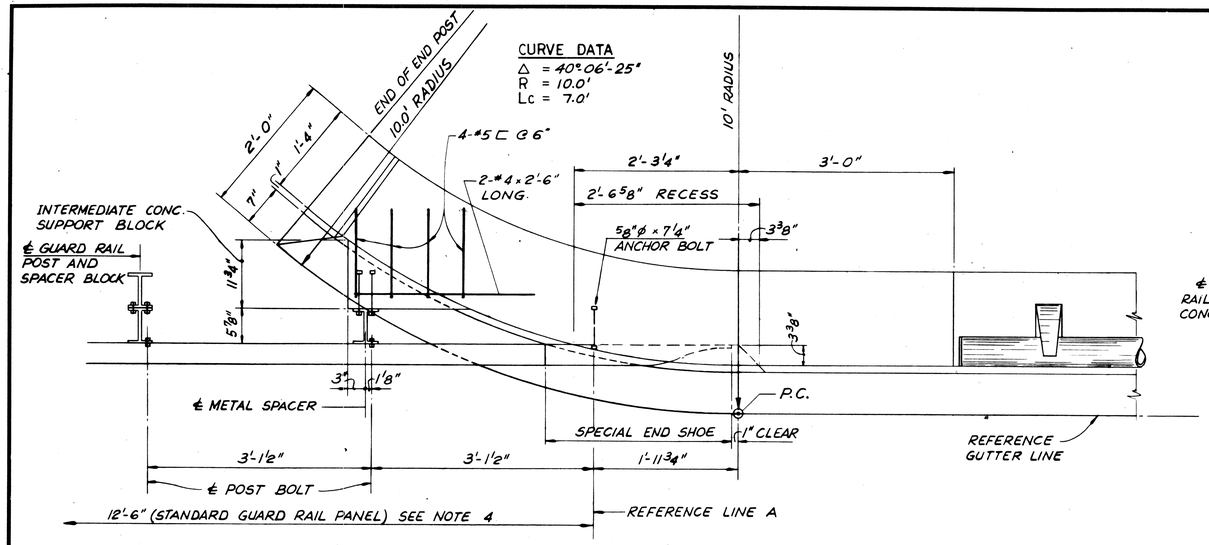

PLAN
SCALE: 1" = 1'-0"

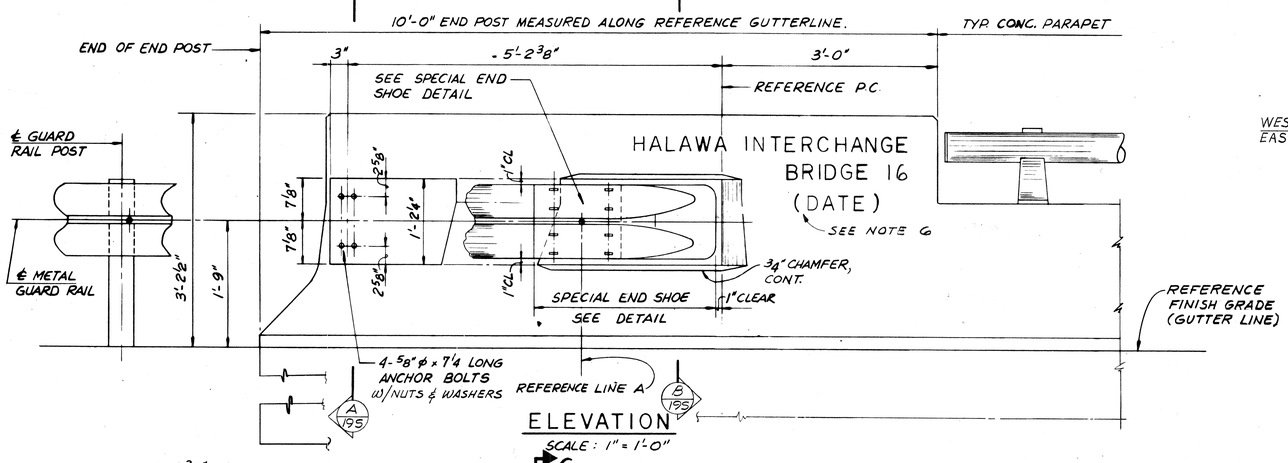

ELEVATION
SCALE: 1" = 1'-0"

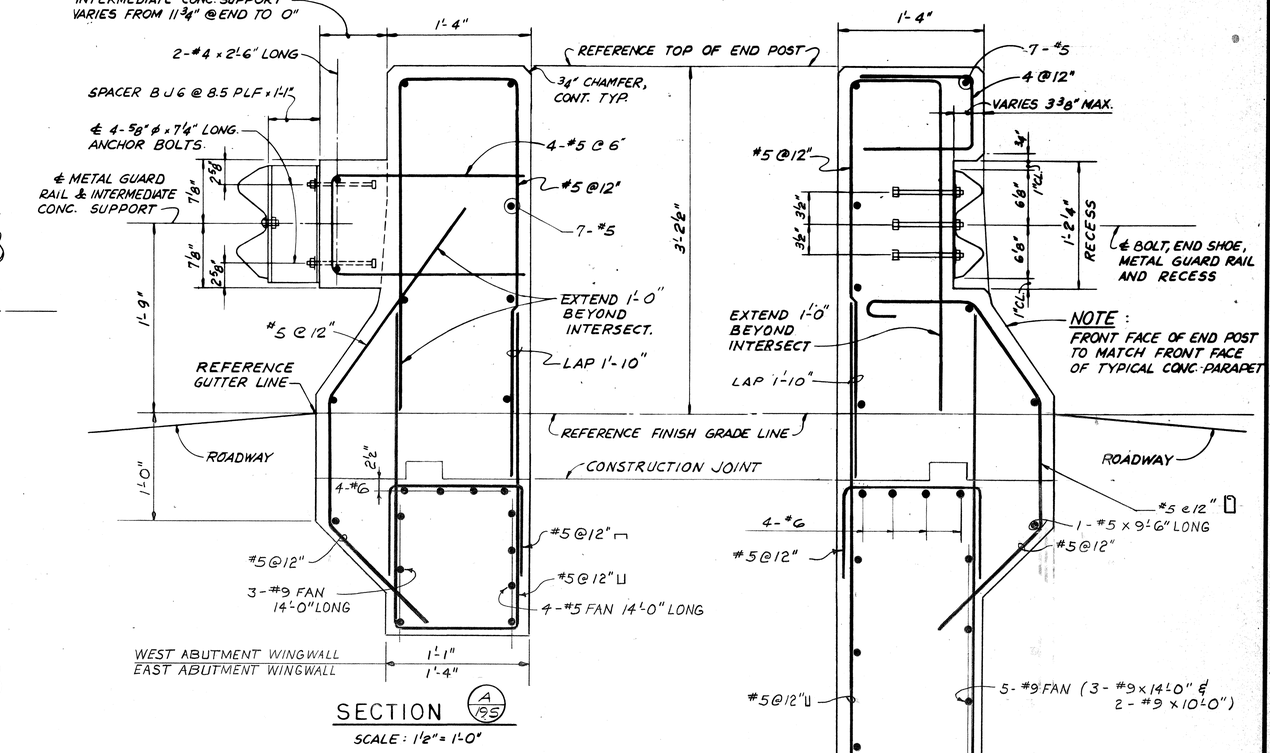

SECTION A/195
SCALE: 1½" = 1'-0"

SECTION B/195
SCALE: 1½" = 1'-0"
ALSO SEE DETAILS

NOTES:

1.-ALL ANCHOR BOLTS SHALL BE HIGH STRENGTH BOLTS CONFORMING TO THE REQUIREMENTS OF A S T M A-325.

2.-ALL SHOE ASSEMBLY, INCLUDING ANCHOR BOLTS, NUTS AND WASHERS, SHALL BE GALVANIZED.

3.-SPECIAL END SHOE SHALL BE FABRICATED FROM 10 GAGE STEEL CONFORMING TO THE REQUIREMENTS OF AASHO 180.

4.-FIRST GUARD RAIL PANEL ADJOINING "SPECIAL END SHOE" SHALL BE OF GALVANIZED STEEL. SEE SPECIAL PROVISIONS FOR REQUIREMENTS.

5.-ANCHOR BOLT LENGTH GIVEN FROM UNDER BOLT HEAD.

6.-PLACE NAME OF STRUCTURE AS SHOWN. FOR LOCATION, SEE PLAN ON SHEET 15. DATE SHOWN WILL BE YEAR STRUCTURE IS COMPLETED. LETTER SIZE AND DETAIL SEE STANDARD BRIDGE DETAILS.

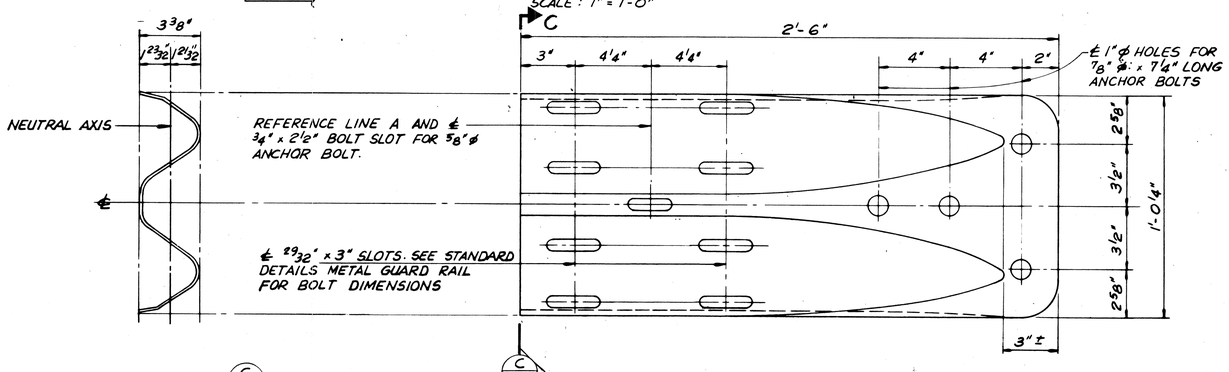

SECTION C/195
SCALE: 3" = 1'-0"

SPECIAL END SHOE DETAIL
SCALE: 3" = 1'-0"

ORIGINAL PLAN	SURVEY PLOTTED BY	DATE
	DRAWN BY	
	TRACED BY	
NOTE BOOK	DESIGNED BY	
	QUANTITIES BY	
No.	CHECKED BY	

THOMAS R. KUEBLER
REGISTERED PROFESSIONAL ENGINEER
No. 1856
HAWAII, U.S.A.

THIS WORK WAS PREPARED BY ME OR UNDER MY SUPERVISION.

STATE OF HAWAII
DEPARTMENT OF TRANSPORTATION
HIGHWAYS DIVISION

HALAWA INTERCHANGE
STRUCTURE NO. 16

ULUNE EXTENSION VIADUCT

CONC. END POST DETAILS

PROJ. No. I-H1-1(89):13 DATE: MAY 1971

SHEET No. 195 OF 225 SHEETS

FED. ROAD DIST. NO.	STATE	FED. AID PROJ. NO.	FISCAL YEAR	SHEET NO.	TOTAL SHEETS
HAWAII	HAW.	I-H1-1(89):13	1971	230	362

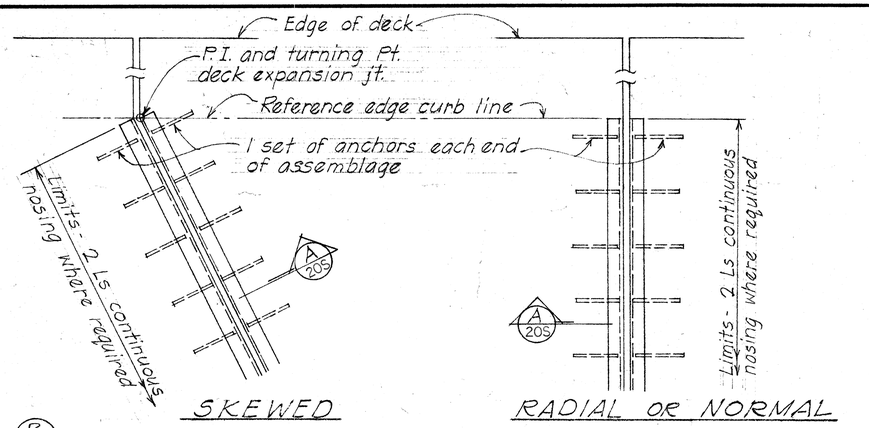

B 20S PLAN TRANSVERSE DECK EXPANSION JOINT

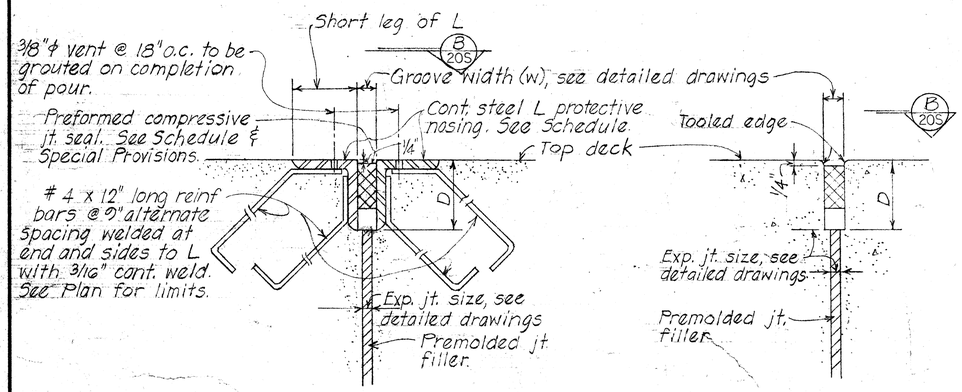

AT STEEL ANGLE PROTECTIVE NOSING

AT PLAIN CONCRETE GROOVE

TYPICAL SECTION A 20S

Scale: 3" = 1'-0"

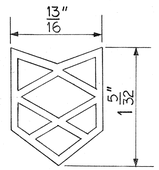

TYPE C

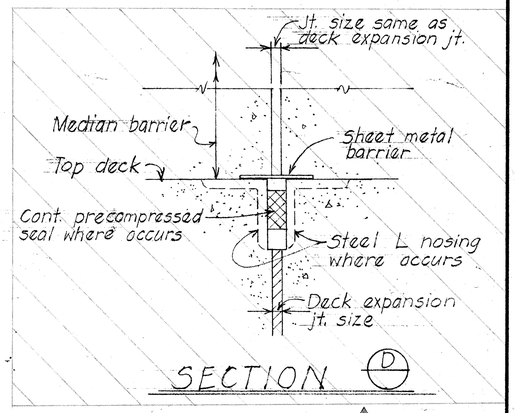

SECTION D

NOT APPLICABLE

Joint Seal Size	Type A - Joint Sealer (Dimensions and Tolerances) J	H	Thickness T	t	Steel Angle Protective Nosing	Groove Dim. D	Type B - Joint Sealer (Dimensions and Tolerances) J	H	Thickness T	t
2	1 3/4 +3/16 -0	2 ± 1/8	1/8 +1/32 -1/64	3/32 +1/64 -1/32	3 1/2" x 3 1/2" x 1/2"	3 1/2"	1 3/4 +3/16 -0	1 3/4 ± 3/16	5/64 +1/32 -1/64	—
3	2 +3/16 -0	2 11/16 ± 1/8	1/8 +1/32 -1/64	3/32 +1/32 -1/64	4" x 3 1/2" x 1/2"	4"	2 +5/32 -0	2 +1/8 -0	7/64 +1/32 -0	—
4	2 1/2 +1/4 -0	2 3/4 ± 1/8	3/16 +3/64 -1/64	3/32 +1/32 -1/64	5" x 3 1/2" x 1/2"	5"				
5	3 +1/4 -0	3 13/32 ± 3/16	3/16 +3/64 -1/64	1/8 +3/64 -1/64	6" x 3 1/2" x 1/2"	6"				
6	4 +5/16 -0	4 23/32 ± 1/4	1/4 +3/64 -1/32	3/16 +3/64 -1/64	7" x 4" x 1/2"	7"				
7	See Watson Bowman	Mod. WD-225								

EXPANSION JOINT SEALER SCHEDULE

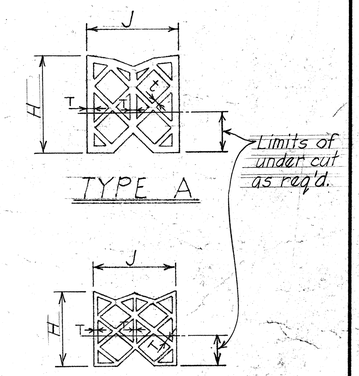

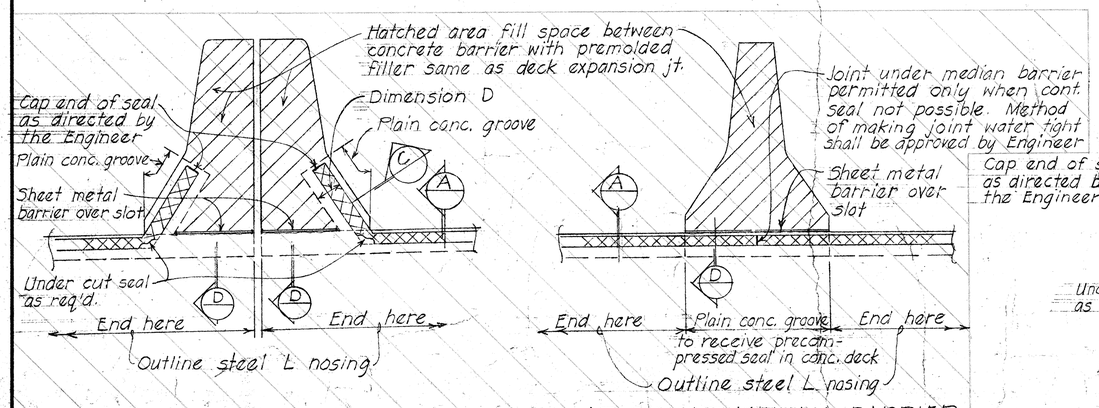

AT DOUBLE MEDIAN BARRIER

AT SINGLE MEDIAN BARRIER

NOT APPLICABLE

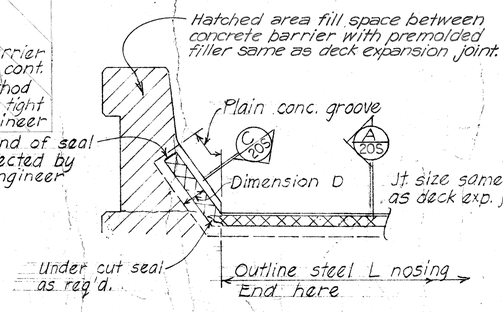

AT CONCRETE RAILING

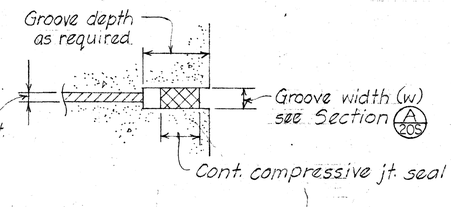

SECTION C 20S

NOTE: Steel angle protective nosing assembly to be hot dipped galvanized after fabrication.

Steel angle protective nosing assembly and joint sealer incidental to concrete and will not be paid for separately.

STATE OF HAWAII
DEPARTMENT OF TRANSPORTATION
HIGHWAYS DIVISION

HALAWA INTERCHANGE
STRUCTURE NO. 16
ULUNE EXTENSION VIADUCT

DECK EXPANSION JOINT

INTERSTATE ROUTE H-1
PROJ. NO. I-H1-1(89):13

SCALE: AS SHOWN DATE: MAY 1971

SHEET No. 205 OF 225 SHEETS

ORIGINAL PLAN	SURVEY PLOTTED BY	DATE
	TRACED BY	
	DESIGNED BY	
NOTE BOOK	QUANTITIES BY	
No.	CHECKED BY	

K+E CRYSTALENE® LA 2920 TRACING PAPER

FED. ROAD DIST. NO.	STATE	FED. AID PROJ. NO.	FISCAL YEAR	SHEET NO.	TOTAL SHEETS
HAWAII	HAW.	I-HI-1(89):13	1971	231	362

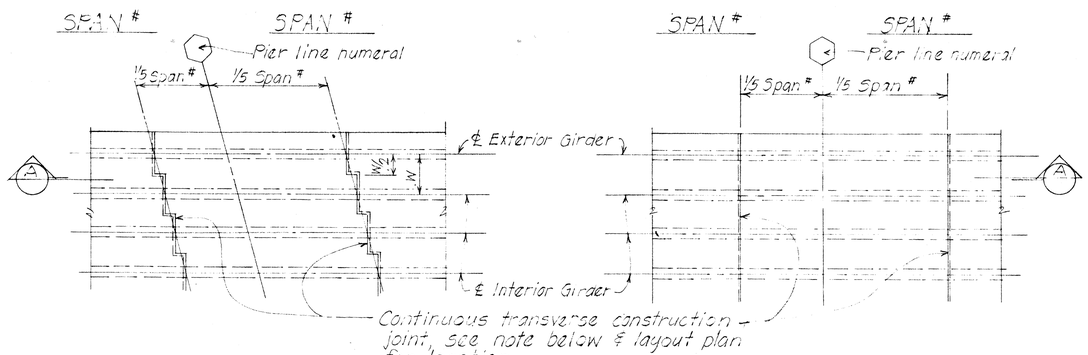

AT SKEWED PIERS

AT NORMAL OR RADIAL PIERS

PLAN - TYPICAL TRANSVERSE DECK CONSTRUCTION JOINT LOCATION

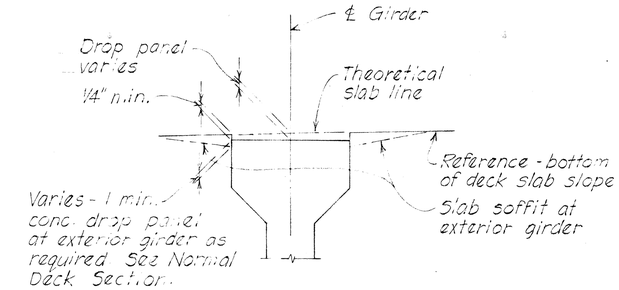

TYPICAL SLAB DROP PANEL DETAIL AT PRESTRESSED GIRDER

No Scale

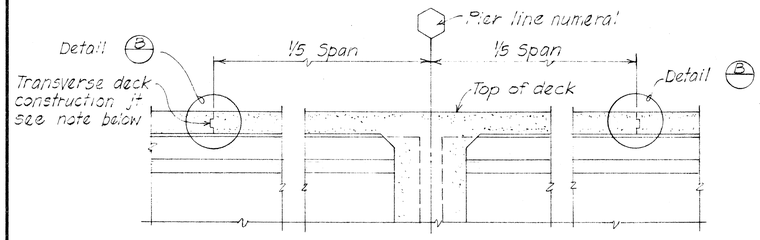

A DETAIL OF CONTINUOUS SLAB OVER PIER

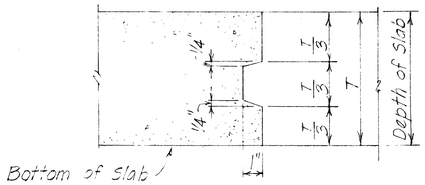

B TYPICAL SLAB CONSTRUCTION JOINT DETAIL

NOTE:

Transverse deck construction joint shall be used at these locations. The portion of the pour indicated between construction joints over the pier shall not be poured until the pours for the adjacent positive moment areas have been completed.

Transverse deck construction joints may be eliminated if permitted by the Engineer in writing. If the construction joints are eliminated, water reducing and retarding admixture conforming to AASHO Designation: M194, Type D, shall be added to the deck concrete over the pier within the indicated lines. The type of the admixture shall be such that the amount of dosage used will produce the retardation required. The type and dosage of the admixture, and the method of pour shall be approved by the Engineer.

ORIGINAL PLAN	SURVEY PLOTTED BY	DATE
	DRAWN BY "	
	TRACED BY "	
NOTE BOOK	DESIGNED BY "	
	QUANTITIES BY "	
No.	CHECKED BY "	

STATE OF HAWAII
DEPARTMENT OF TRANSPORTATION
HIGHWAYS DIVISION

HALAWA INTERCHANGE
STRUCTURE NO. 16
ULUNE EXTENSION VIADUCT
DECK CONSTRUCTION
JOINT DETAILS

PROJ. No. I-H1-1(89):13 DATE: MAY 1971

SHEET No. 215 OF 225 SHEETS

231

PRINTED ON NO. 1000H CLEARPRINT

FED. ROAD DIST. NO.	STATE	FED. AID PROJ. NO.	FISCAL YEAR	SHEET NO.	TOTAL SHEETS
HAWAII	HAW.	I-H1-1(89)13	1971	232	362

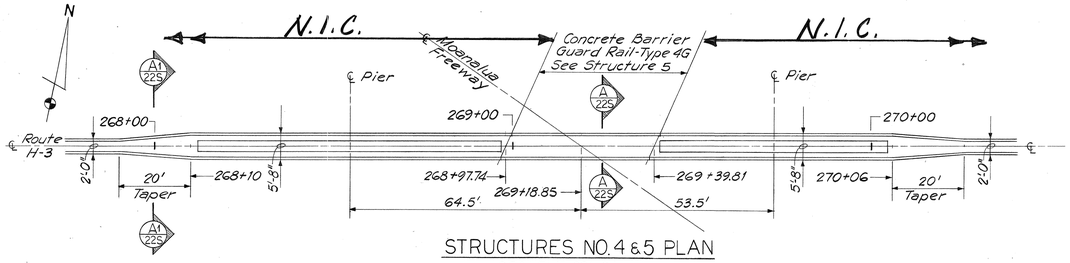

STRUCTURES NO. 4 & 5 PLAN
SCALE: 1"=20'-0"

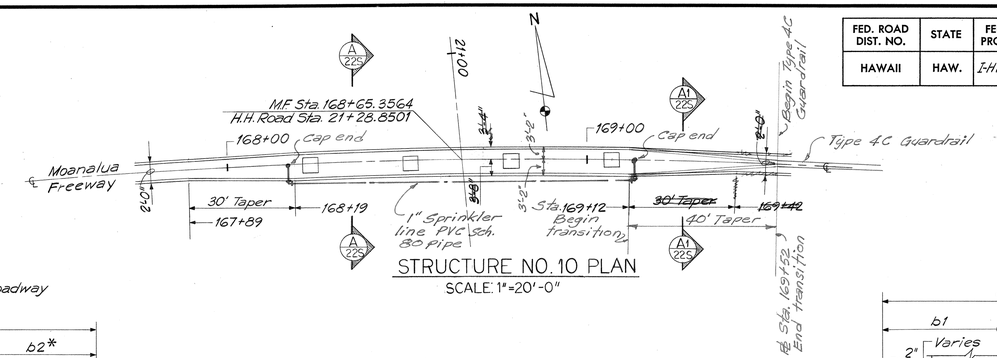

STRUCTURE NO. 10 PLAN
SCALE: 1"=20'-0"

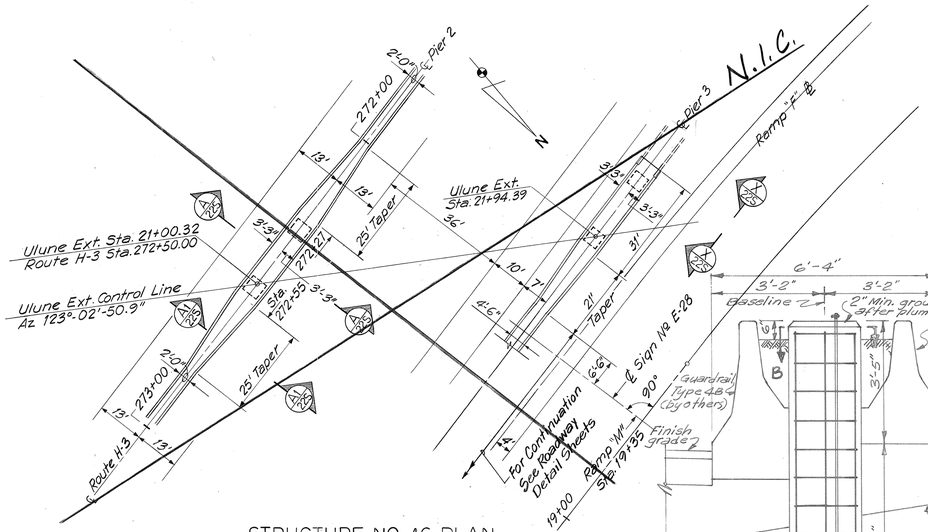

STRUCTURE NO. 16 PLAN
SCALE: 1"=20'-0"

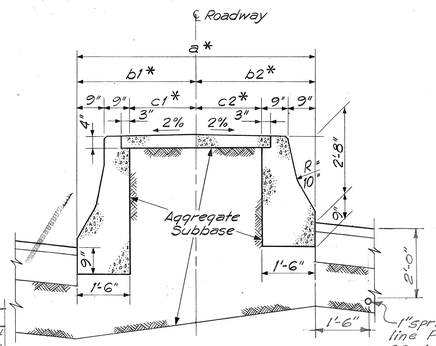

SECTION A-A
SCALE: 1/2"=1'-0"

TABLE OF APPLIED DIMENSIONS						
LOCATION	a	b1	b2	C1	C2	
~~Structure No. 4~~	~~5'-8"~~	~~2'-10"~~	~~2'-10"~~	~~1'-4"~~	~~1'-4"~~	N.I.C.
Structure No. 10	~~6'-4"~~ ~~7'-6"~~	~~3'-2"~~ ~~3'-4"~~	~~3'-2"~~ ~~3'-8"~~	~~1'-8"~~ ~~2'-2"~~	~~1'-8"~~ ~~2'-6"~~	
~~Struct. No. 16~~ ~~Pier 2~~	~~6'-6"~~	~~3'-3"~~	~~3'-3"~~	~~1'-9"~~	~~1'-9"~~	N.I.C.
~~Pier 3~~	~~6'-6"~~	~~3'-3"~~	~~3'-3"~~	~~1'-9"~~	~~1'-9"~~	N.I.C.
Section A-A	6'-4"	3'-2"	3'-2"			
Section A'-A'	Varies	Varies	Varies	6'-4" to 2'-0"		

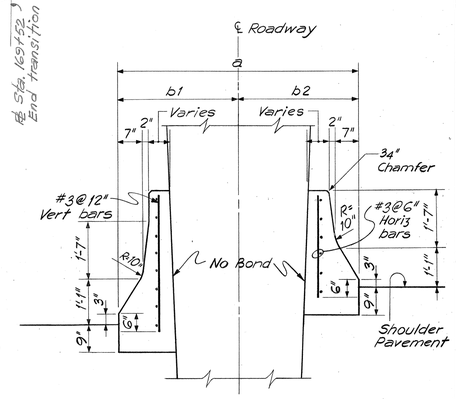

SECTION B-B
SCALE: 1/2"=1' 0"
(Looking Upstation)

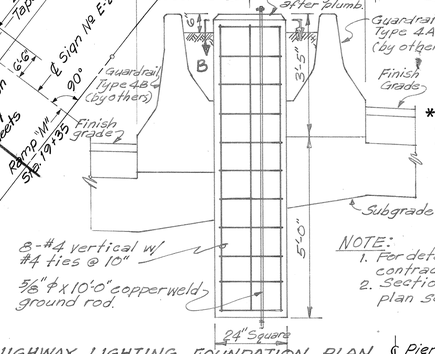

Shown for superelevated section. For normal section right-hand dimensions are symmetrical about centerline.
* Section "A1-A1" similar except width dimensions vary. For additional barrier dimensions see Section B-B.

NOTES:
1. Section "A-1-A-1" similar to "A-A" except width dimensions vary and top slab eliminated and aggregate subbase area filled w/planter box material. (Planter Box detail-Section "A1-A1")
2. 1" sprinkler line PVC sch. 80 pipe shall be installed in accordance with Section 616 of the Standard Specification & Special Provisions.
3. Payment for rigid barrier pier protection from Sta. 168+19 to 169+52 shall be paid as per contract plans. (See note 1, contract plan sht #34)
4. For details not shown see contract plan sheets.

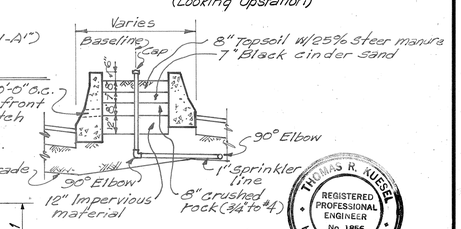

SECTION A1-A1
Scale: 1/4"=1'-0"

NOTE:
1. For details not shown see HWY Lighting contract plans.
2. Section "B-B" Top mat reinforcing plan see contract plan sheet No. 131

HIGHWAY LIGHTING FOUNDATION PLAN
(MOANALUA FREEWAY STA. 166+80)
Scale: 1/2"=1'-0"

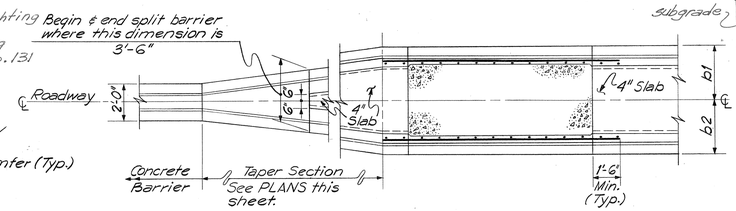

PLAN DETAIL
SCALE: 1/4"=1'-0"

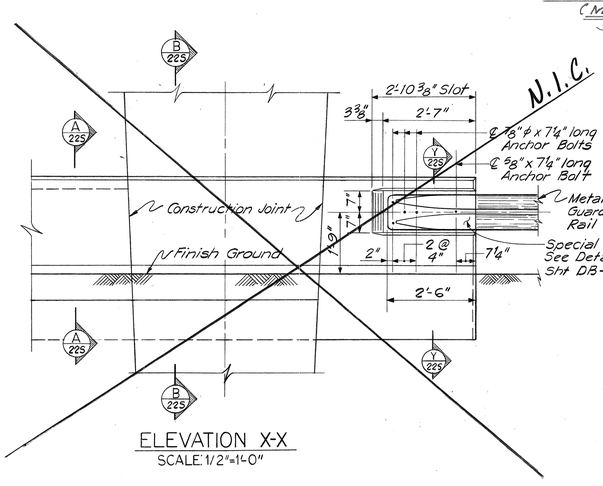

ELEVATION X-X
SCALE: 1/2"=1'-0"

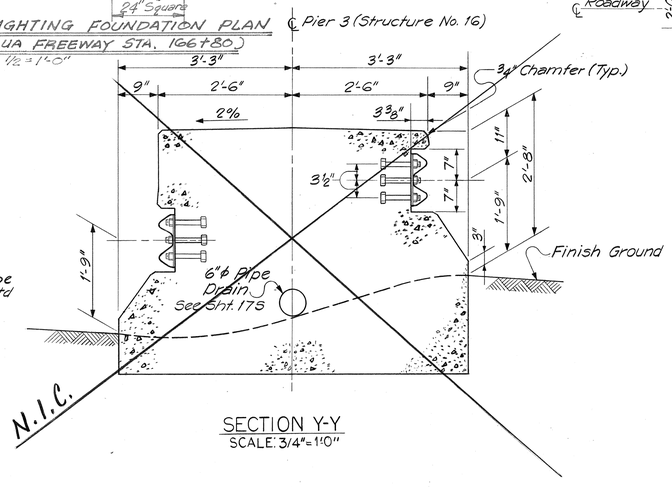

SECTION Y-Y
SCALE: 3/4"=1'0"

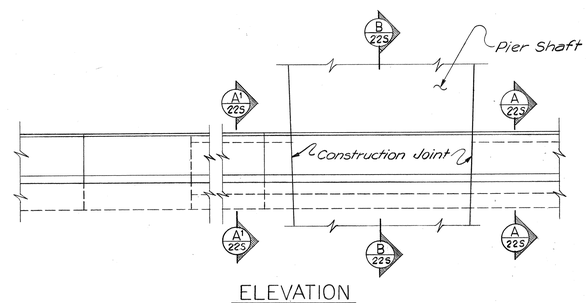

ELEVATION
SCALE: 1/4"=1'-0"

NOTES:
1. Median barrier reinforcement, concrete and all work required for installation are not bridge items. See Civil Drawings.
2. For location and details of electrical conduits in pier shafts and concrete barriers see Electrical Plans.

THOMAS R. KUESEL
REGISTERED PROFESSIONAL ENGINEER
No. 1856
HAWAII, U.S.A.

THIS WORK WAS PREPARED BY ME OR UNDER MY SUPERVISION.

ORIGINAL PLAN	SURVEY PLOTTED BY	DATE
	DRAWN BY	
	TRACED BY	
NOTE BOOK	DESIGNED BY	
	QUANTITIES BY	
No.	CHECKED BY	

STATE OF HAWAII
DEPARTMENT OF TRANSPORTATION
HIGHWAYS DIVISION

HALAWA INTERCHANGE
STRUCTURE NO. 16
ULUNE EXTENSION VIADUCT

RIGID BARRIER DETAILS
PIER PROTECTION

PROJ. No. I-H1-1(89)13 DATE: MAY 1971

SHEET No. 22S OF 22S SHEETS

232