FED. ROAD DIST. NO.	STATE	FED. AID PROJ. NO.	FISCAL YEAR	SHEET NO.	TOTAL SHEETS
HAWAII	HAW.	I-HI-1(89)-13	1971	27	362

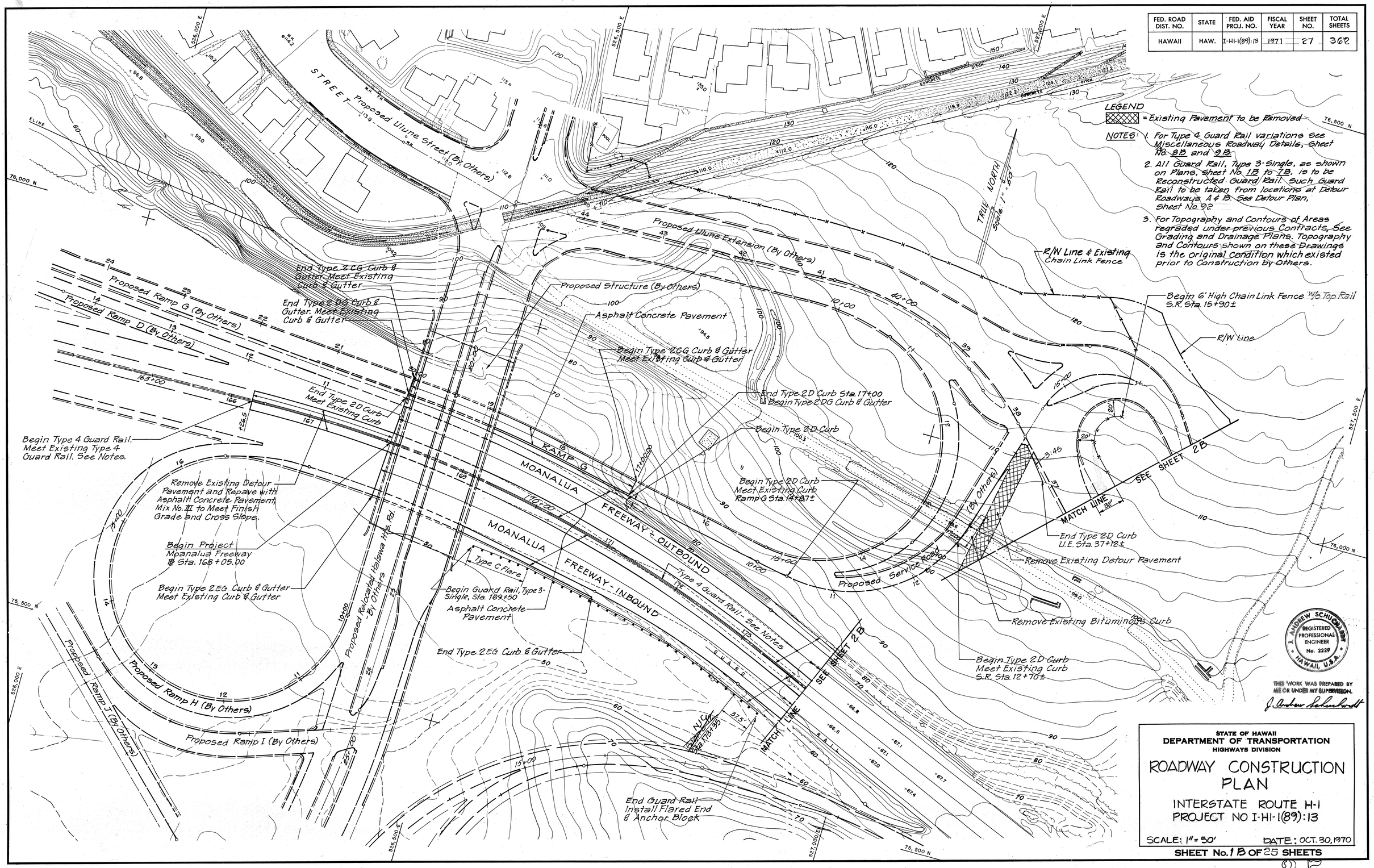

LEGEND

= Existing Pavement to be Removed

NOTES:

1. For Type 4 Guard Rail variations see Miscellaneous Roadway Details, Sheet No. 8B and 9B.
2. All Guard Rail, Type 3-Single, as shown on Plans, Sheet No. 1B to 7B, is to be Reconstructed Guard Rail. Such Guard Rail to be taken from locations at Detour Roadways A & B. See Detour Plan, Sheet No. 9B
3. For Topography and Contours of Areas regraded under previous Contracts, See Grading and Drainage Plans. Topography and Contours shown on these Drawings is the original condition which existed prior to Construction by Others.

ANDREW SCHUCHART
REGISTERED PROFESSIONAL ENGINEER
No. 2229
HAWAII, U.S.A.

THIS WORK WAS PREPARED BY ME OR UNDER MY SUPERVISION.

J. Andrew Schuchart

STATE OF HAWAII
DEPARTMENT OF TRANSPORTATION
HIGHWAYS DIVISION

ROADWAY CONSTRUCTION PLAN

INTERSTATE ROUTE H-1
PROJECT NO I-HI-1(89):13

SCALE: 1" = 50'

DATE: OCT. 30, 1970

SHEET No. 1B OF 25 SHEETS

ORIGINAL PLAN		DATE
	SURVEY PLOTTED BY	
	DRAWN BY	
	TRACED BY	
	DESIGNED BY	
NOTE BOOK	QUANTITIES BY	
No.	CHECKED BY	

CONSTRUCTION #5

FED. ROAD DIST. NO.	STATE	FED. AID PROJ. NO.	FISCAL YEAR	SHEET NO.	TOTAL SHEETS
HAWAII	HAW.	I-HI-1(89):13	1971	28	362

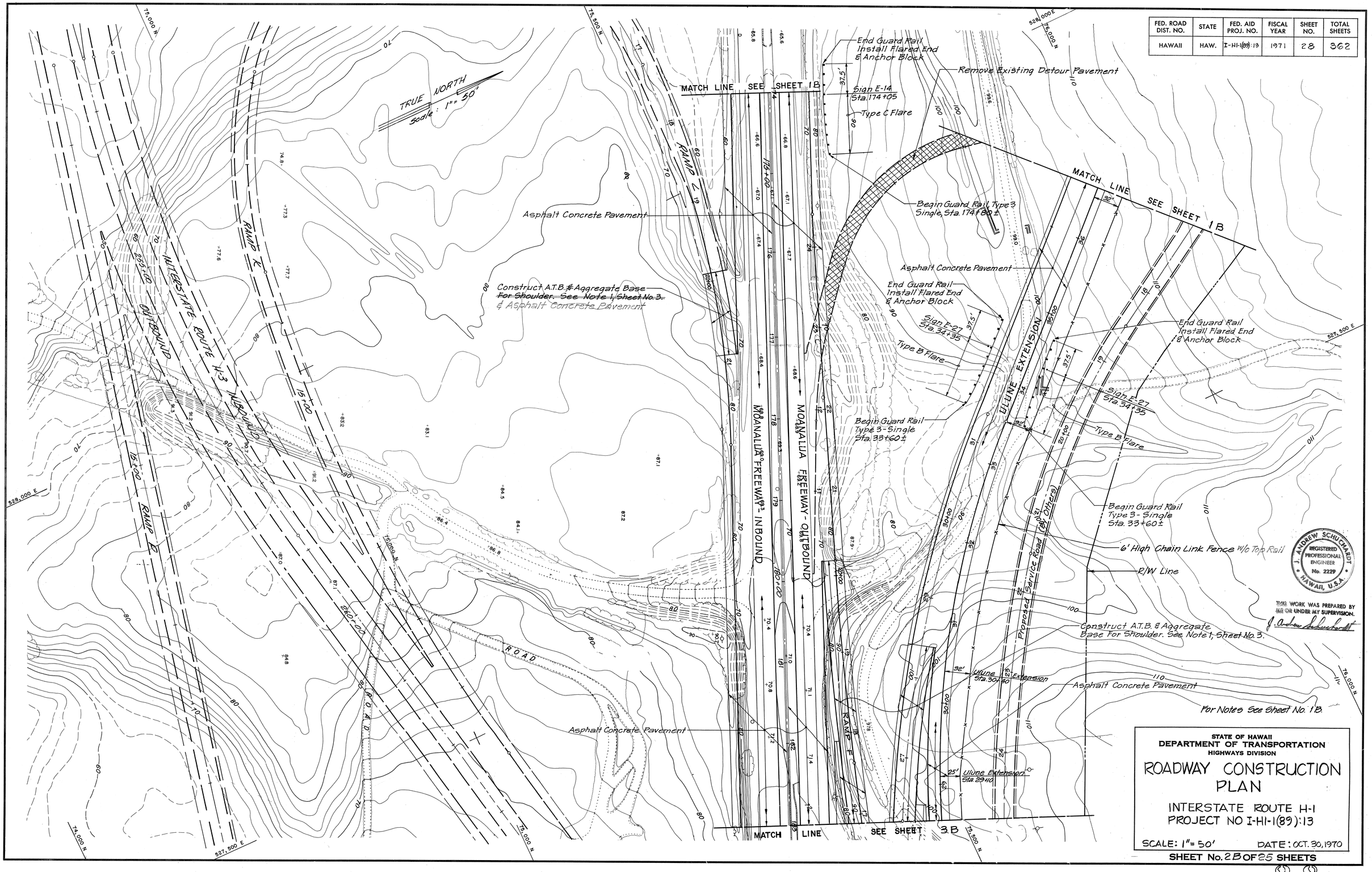

ORIGINAL PLAN	SURVEY PLOTTED BY	DATE
	DRAWN BY	" "
	TRACED BY	" "
NOTE BOOK	DESIGNED BY	" "
	QUANTITIES BY	" "
No.	CHECKED BY	" "

ANDREW SCHUCHARDT
REGISTERED PROFESSIONAL ENGINEER
No. 2229
HAWAII, U.S.A.

THIS WORK WAS PREPARED BY ME OR UNDER MY SUPERVISION.

J. Andrew Schuchardt

STATE OF HAWAII
DEPARTMENT OF TRANSPORTATION
HIGHWAYS DIVISION

ROADWAY CONSTRUCTION PLAN

INTERSTATE ROUTE H-1
PROJECT NO I-HI-1(89):13

SCALE: 1" = 50' DATE: OCT. 30, 1970

SHEET No. 2B OF 25 SHEETS

FED. ROAD DIST. NO.	STATE	FED. AID PROJ. NO.	FISCAL YEAR	SHEET NO.	TOTAL SHEETS
HAWAII	HAW.	I-HI-1(89)-13	1971	29	362

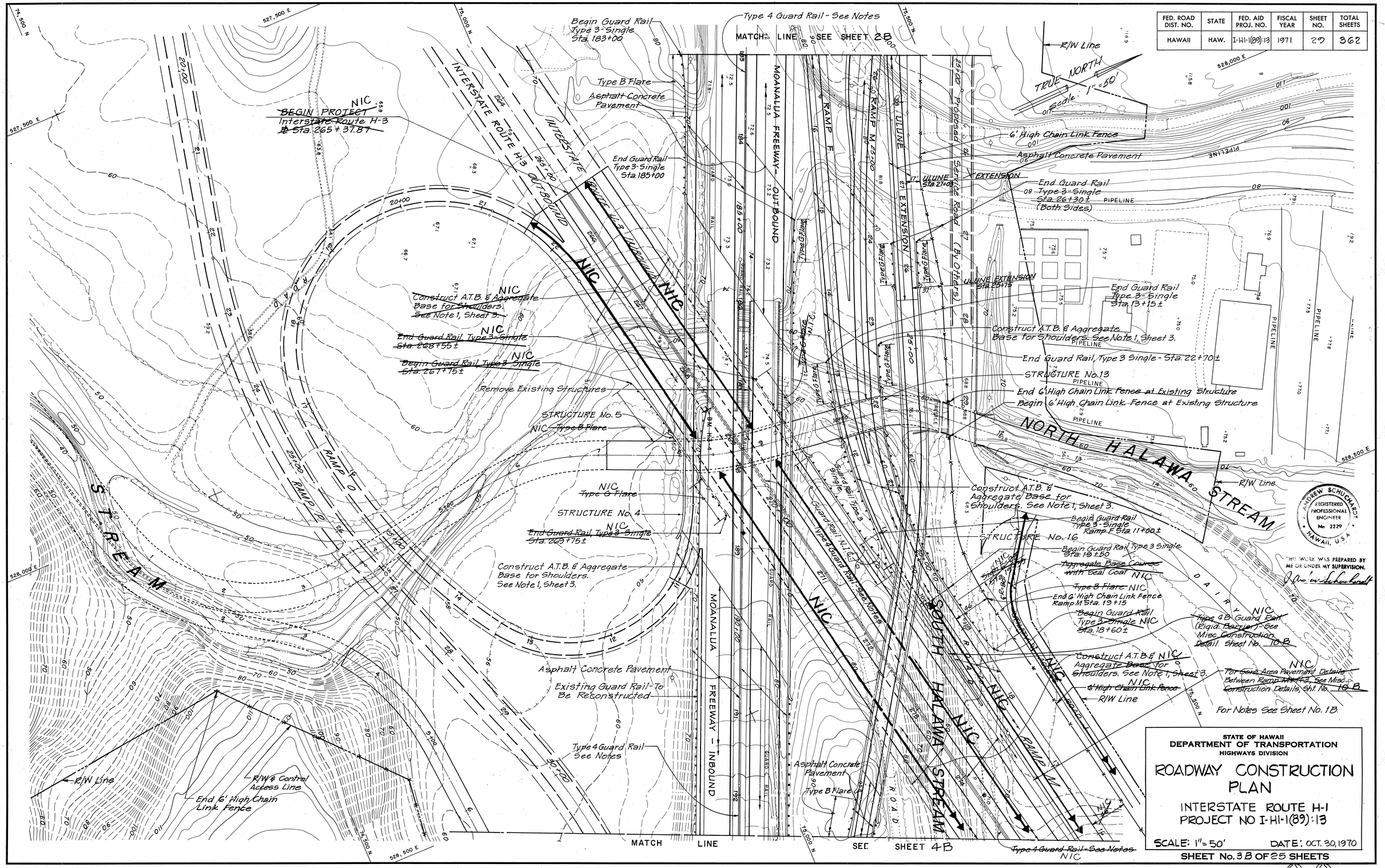

ORIGINAL PLAN		
	SURVEY PLOTTED BY	DATE
	DRAWN BY	"
	TRACED BY	"
	DESIGNED BY	"
NOTE BOOK	QUANTITIES BY	"
No.	CHECKED BY	"

STATE OF HAWAII
DEPARTMENT OF TRANSPORTATION
HIGHWAYS DIVISION

ROADWAY CONSTRUCTION PLAN

INTERSTATE ROUTE H-1
PROJECT NO I-HI-1(89):13

SCALE: 1" = 50' DATE: OCT. 30, 1970

SHEET No. 3B OF 25 SHEETS

29

FED. ROAD DIST. NO.	STATE	FED. AID PROJ. NO.	FISCAL YEAR	SHEET NO.	TOTAL SHEETS
HAWAII	HAW.	I-HI-1(89):13	1971	30	362

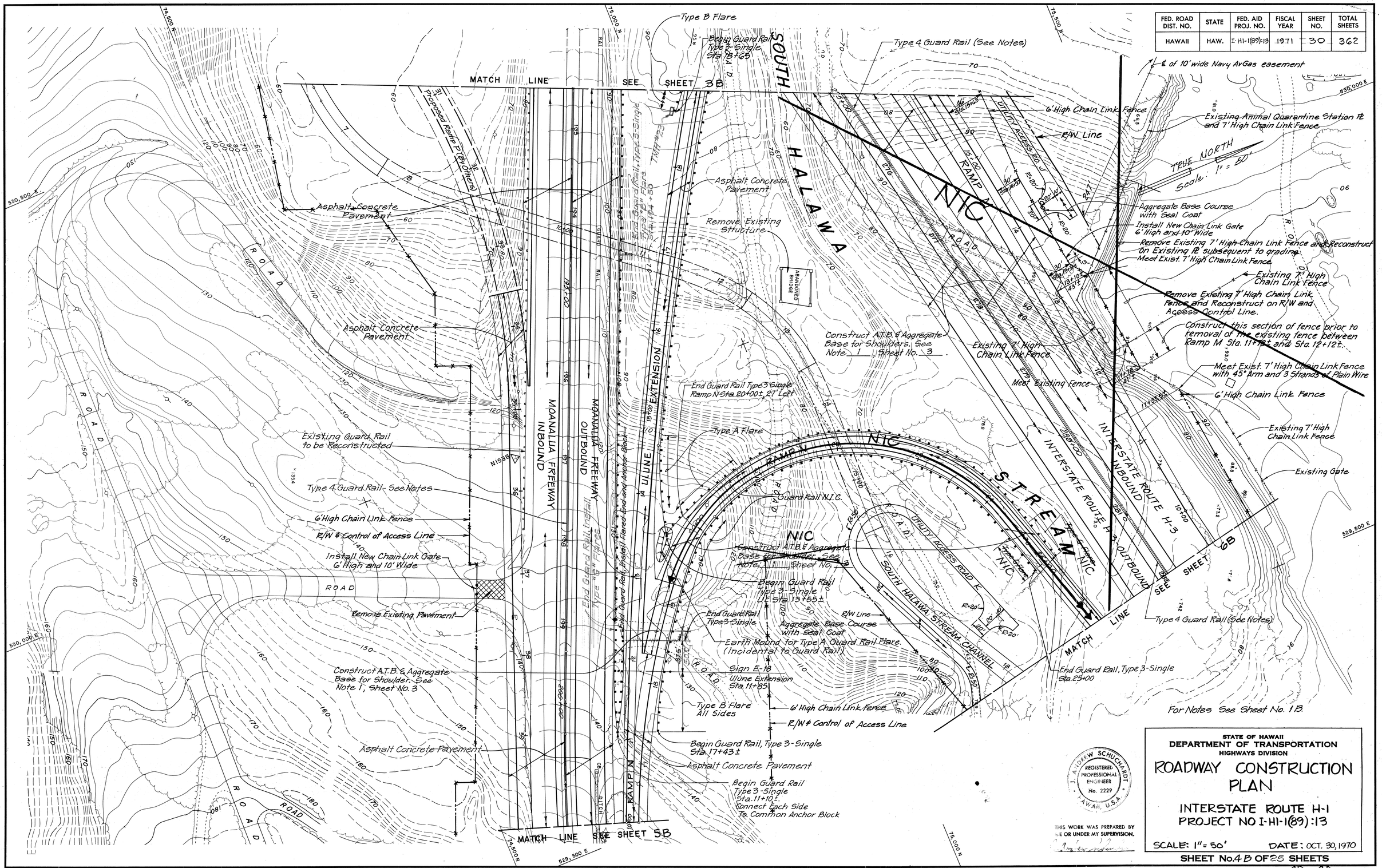

ORIGINAL PLAN	SURVEY PLOTTED BY	DATE
	DRAWN BY	
	TRACED BY	
NOTE BOOK	DESIGNED BY	
	QUANTITIES BY	
No.	CHECKED BY	

THIS WORK WAS PREPARED BY ME OR UNDER MY SUPERVISION.

J. ANDREW SCHUCHARDT
REGISTERED PROFESSIONAL ENGINEER
No. 2229
HAWAII, U.S.A.

STATE OF HAWAII
DEPARTMENT OF TRANSPORTATION
HIGHWAYS DIVISION

ROADWAY CONSTRUCTION PLAN

INTERSTATE ROUTE H-1
PROJECT NO I-HI-1(89):13

SCALE: 1" = 50' DATE: OCT. 30, 1970

SHEET No. 4B OF 25 SHEETS

FED. ROAD DIST. NO.	STATE	FED. AID PROJ. NO.	FISCAL YEAR	SHEET NO.	TOTAL SHEETS
HAWAII	HAW.	I-HI-1(89):13	197:	31	362

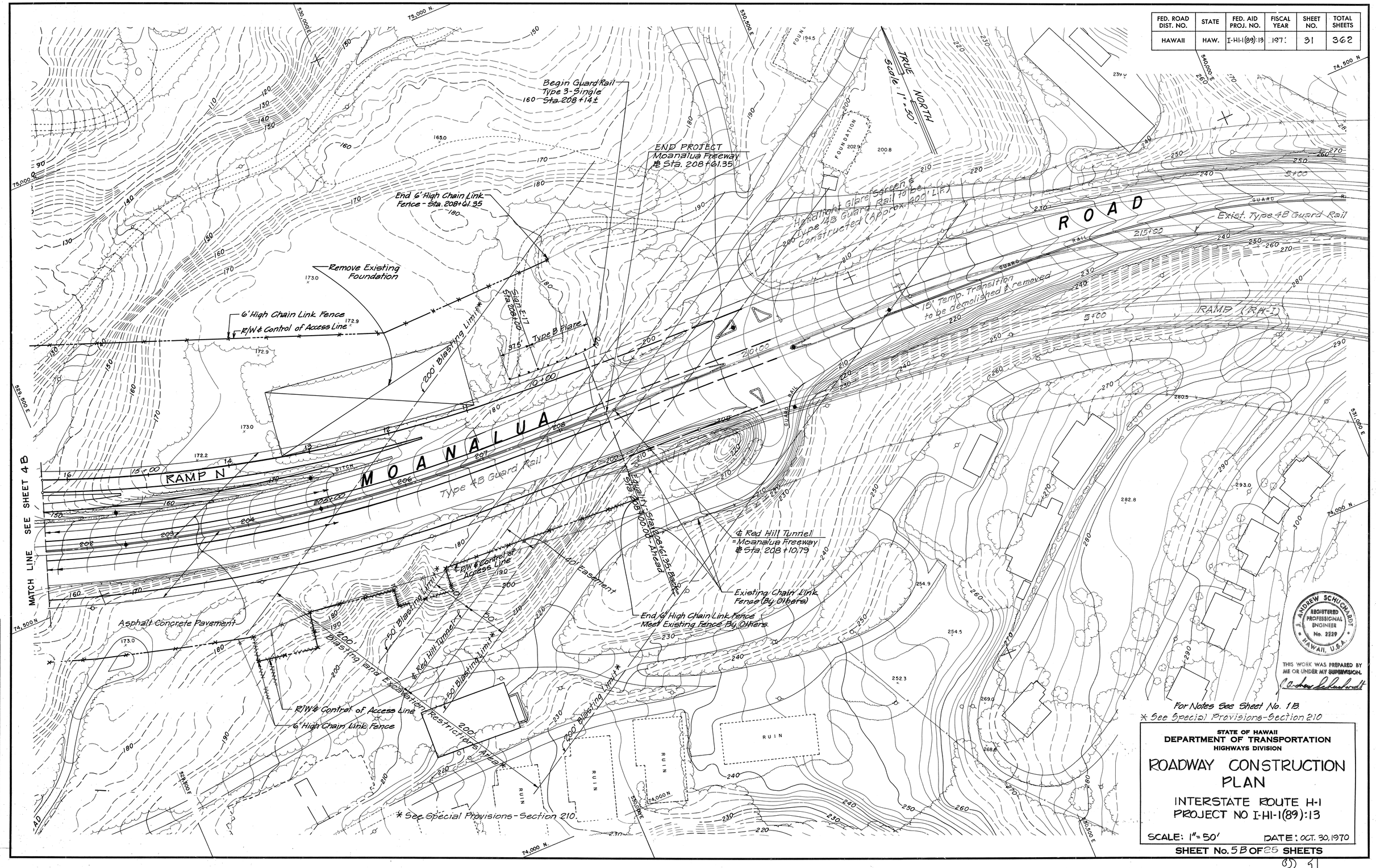

For Notes See Sheet No. 1B.

* See Special Provisions-Section 210

J. ANDREW SCHUCHARDT
REGISTERED PROFESSIONAL ENGINEER
No. 2229
HAWAII, U.S.A.

THIS WORK WAS PREPARED BY ME OR UNDER MY SUPERVISION.

STATE OF HAWAII
DEPARTMENT OF TRANSPORTATION
HIGHWAYS DIVISION

ROADWAY CONSTRUCTION PLAN

INTERSTATE ROUTE H-1
PROJECT NO I-HI-1(89):13

SCALE: 1" = 50' DATE: OCT. 30, 1970

SHEET No. 5B OF 25 SHEETS

ORIGINAL PLAN		DATE
	SURVEY PLOTTED BY	
	DRAWN BY	
	TRACED BY	
NOTE BOOK	DESIGNED BY	
	QUANTITIES BY	
No.	CHECKED BY	

FED. ROAD DIST. NO.	STATE	FED. AID PROJ. NO.	FISCAL YEAR	SHEET NO.	TOTAL SHEETS
HAWAII	HAW.	I-HI-1(89):13	1971	32	362

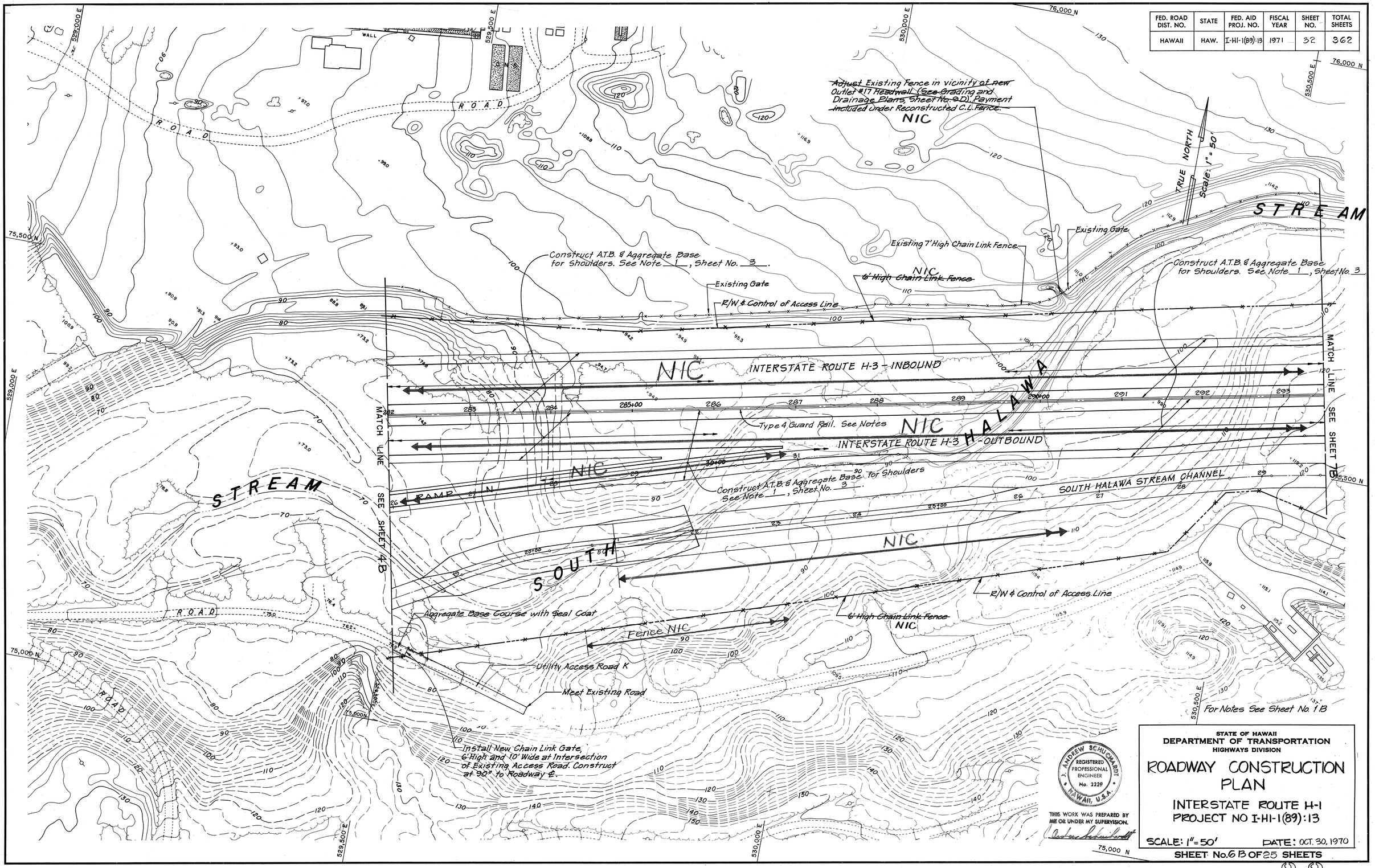

ORIGINAL PLAN		DATE
	SURVEY PLOTTED BY	
	DRAWN BY	
	TRACED BY	
	DESIGNED BY	
NOTE BOOK	QUANTITIES BY	
No.	CHECKED BY	

J. ANDREW SCHUCHARDT
REGISTERED PROFESSIONAL ENGINEER
No. 2229
HAWAII, U.S.A.

THIS WORK WAS PREPARED BY ME OR UNDER MY SUPERVISION.

STATE OF HAWAII
DEPARTMENT OF TRANSPORTATION
HIGHWAYS DIVISION

ROADWAY CONSTRUCTION PLAN

INTERSTATE ROUTE H-1
PROJECT NO I-HI-1(89):13

SCALE: 1" = 50' DATE: OCT. 30, 1970

SHEET No. 6B OF 25 SHEETS

FED. ROAD DIST. NO.	STATE	FED. AID PROJ. NO.	FISCAL YEAR	SHEET NO.	TOTAL SHEETS
HAWAII	HAW.	I-H1-1(89):13	1971	33	362

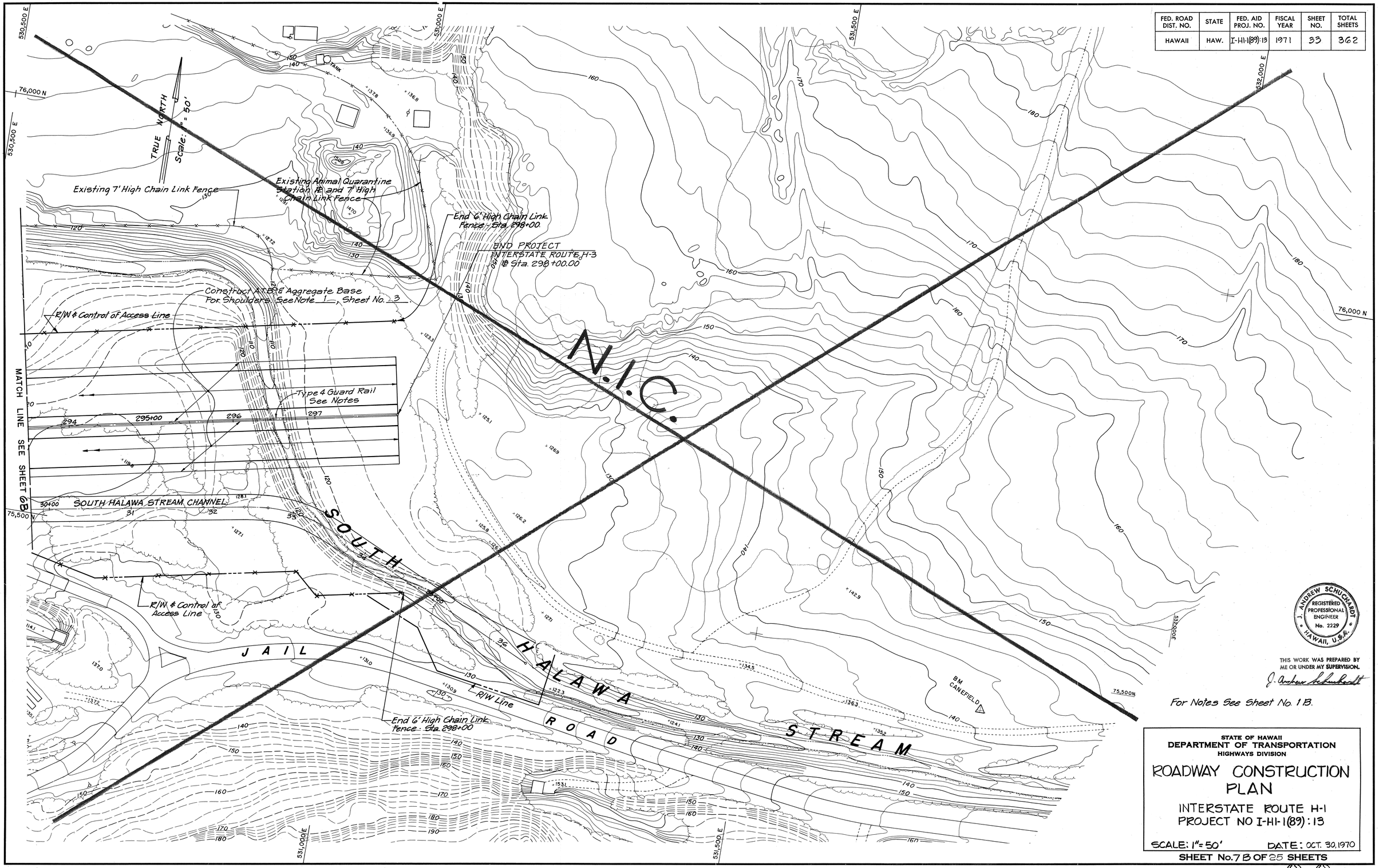

ORIGINAL PLAN		DATE
	SURVEY PLOTTED BY	
	DRAWN BY	
	TRACED BY	
NOTE BOOK	DESIGNED BY	
No.	QUANTITIES BY	
	CHECKED BY	

J. ANDREW SCHUCHARDT
REGISTERED PROFESSIONAL ENGINEER
No. 2229
HAWAII, U.S.A.

THIS WORK WAS PREPARED BY ME OR UNDER MY SUPERVISION.

J. Andrew Schuchardt

For Notes See Sheet No. 1B.

STATE OF HAWAII
DEPARTMENT OF TRANSPORTATION
HIGHWAYS DIVISION

ROADWAY CONSTRUCTION PLAN

INTERSTATE ROUTE H-1
PROJECT NO I-H1-1(89):13

SCALE: 1" = 50' DATE: OCT. 30, 1970

SHEET No. 7B OF 25 SHEETS

FED. ROAD DIST. NO.	STATE	FED. AID PROJ. NO.	FISCAL YEAR	SHEET NO.	TOTAL SHEETS
HAWAII	HAW.	I-H1-1(89):13	1971	34	362

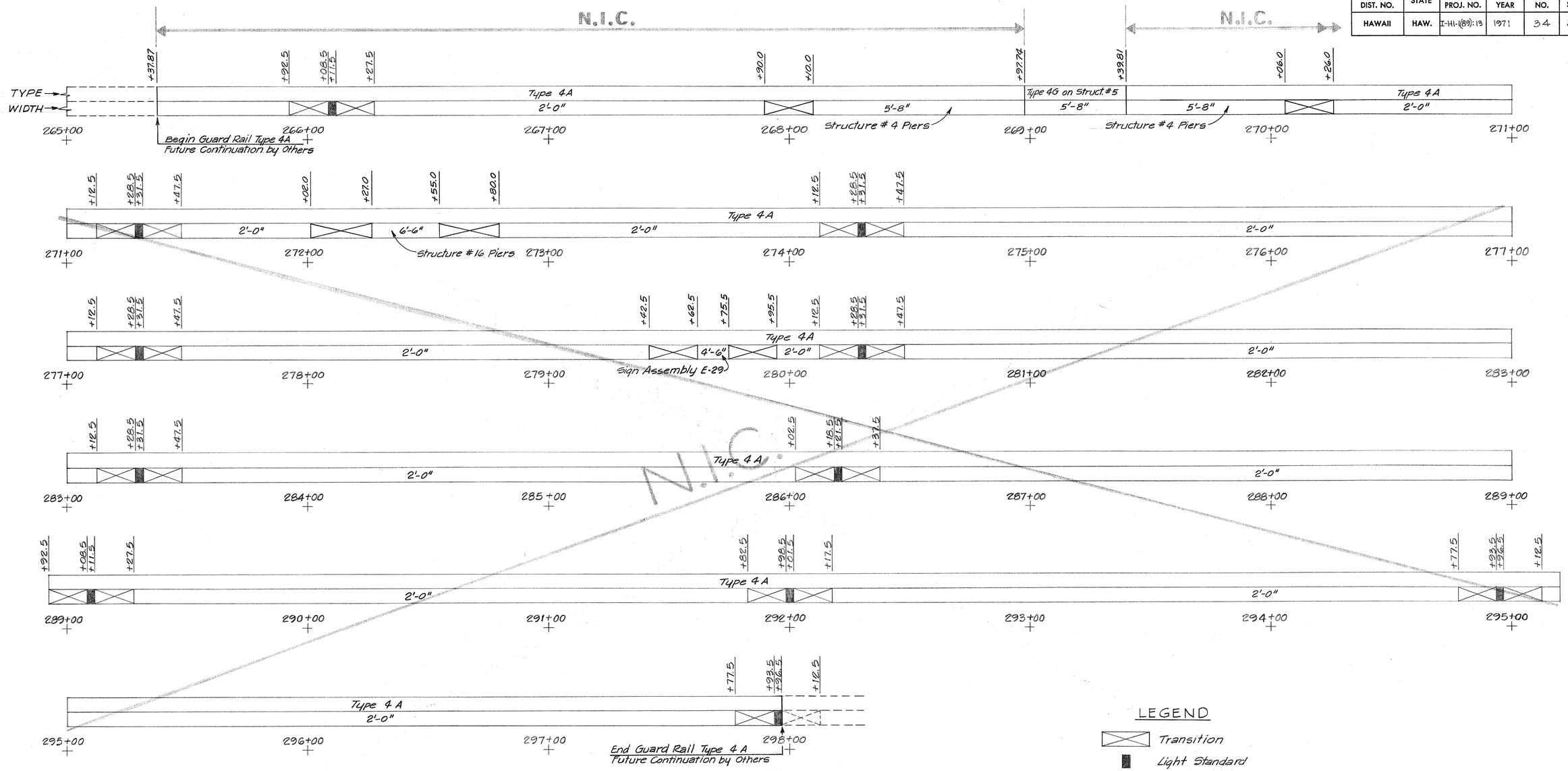

INTERSTATE ROUTE H-3 STATIONING

LEGEND

Transition

Light Standard

NOTES:

1. Guard Rail Types 4A, 4B and 4C to be paid on a linear foot basis, including transitions and widened sections around bridge piers and overhead sign support structures.
2. The three (3) foot widened section of Rigid Barrier around a lighting standard is to be included in the cost of the lighting standard mounting. See Highway Lighting Details.
3. Guard Rail Types 4F and 4G are paid for as bridge items. For Details see Structure Drawings.
4. See Structure Drawings for widened sections of Rigid Barriers at piers.
5. See Signing Plans, Sheet 19T, and Highway Lighting Plans, Sheet 10E, for Rigid Barrier Details at Sign Foundations and Lighting Standard Foundations.

ORIGINAL PLAN	SURVEY PLOTTED BY	DATE
	DRAWN BY	
	TRACED BY	
NOTE BOOK	DESIGNED BY	
	QUANTITIES BY	
No.	CHECKED BY	

J. ANDREW SCHUCHARDT
REGISTERED PROFESSIONAL ENGINEER
No. 2229
HAWAII, U.S.A.

THIS WORK WAS PREPARED BY ME OR UNDER MY SUPERVISION.

J. Andrew Schuchardt

STATE OF HAWAII
DEPARTMENT OF TRANSPORTATION
HIGHWAYS DIVISION

MISCELLANEOUS ROADWAY DETAILS

RIGID BARRIER VARIATIONS

INTERSTATE ROUTE H-1
PROJECT NO. I-H1-1(89):13

NOT TO SCALE — DATE: OCT. 30, 1970

SHEET No. 8B OF 25 SHEETS

33 41

PRINTED ON NO. 1000H CLEARPRINT

FED. ROAD DIST. NO.	STATE	FED. AID PROJ. NO.	FISCAL YEAR	SHEET NO.	TOTAL SHEETS
HAWAII	HAW.	I-HI-1(89):13	1971	35	362

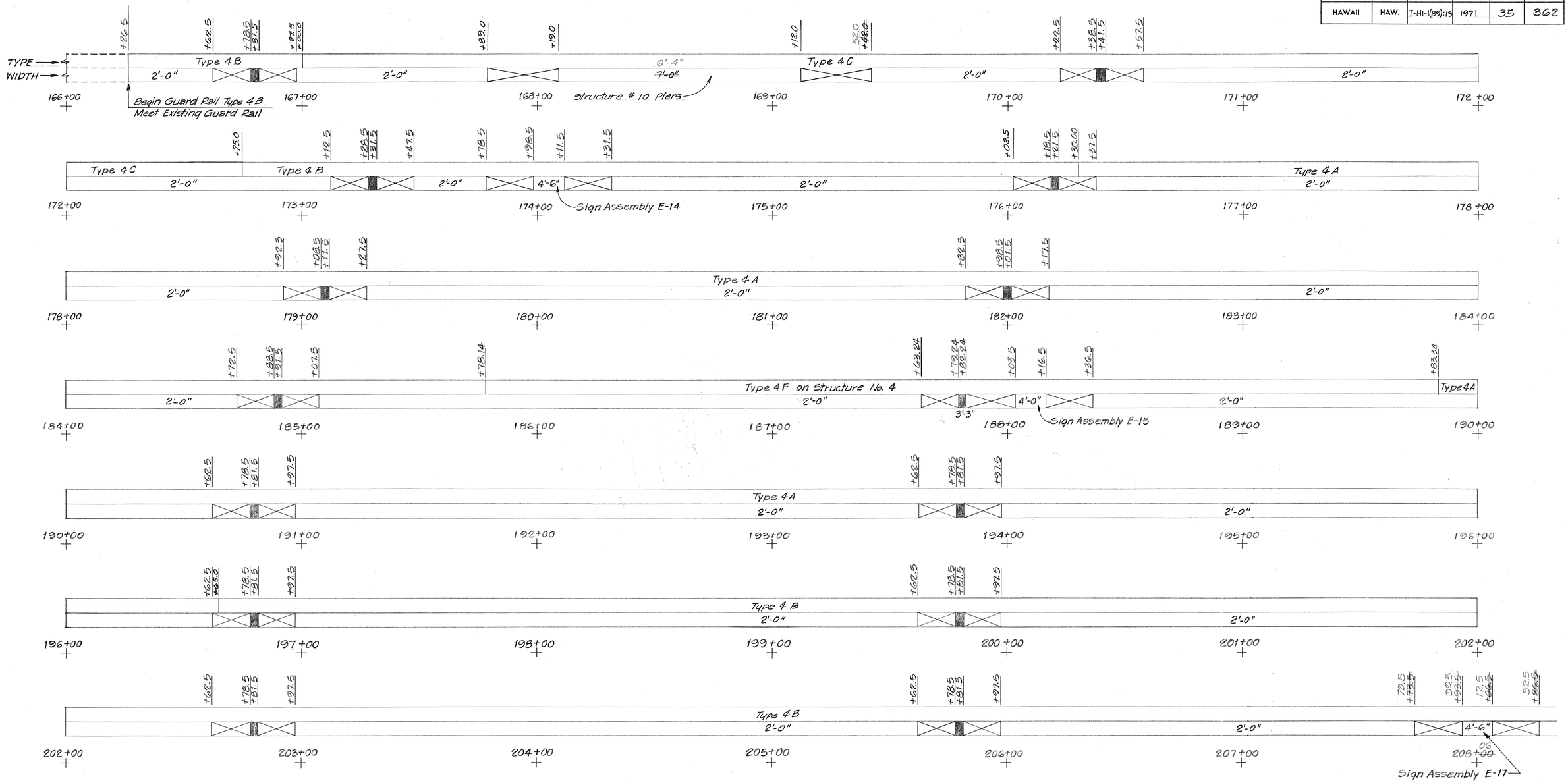

LEGEND

Transition

Light Standard

MOANALUA FREEWAY STATIONING

See Sheet No. 8B for Notes.

J. ANDREW SCHUCHARDT
REGISTERED PROFESSIONAL ENGINEER
No. 2229
HAWAII, U.S.A.

THIS WORK WAS PREPARED BY ME OR UNDER MY SUPERVISION.

J. Andrew Schuchardt

STATE OF HAWAII
DEPARTMENT OF TRANSPORTATION
HIGHWAYS DIVISION

MISCELLANEOUS ROADWAY DETAILS

RIGID BARRIER VARIATIONS

INTERSTATE ROUTE H-1
PROJECT NO. I-HI-1(89):13

NOT TO SCALE — DATE: OCT. 30, 1970

SHEET No. 9B OF 25 SHEETS

ORIGINAL PLAN		
	SURVEY PLOTTED BY	DATE
	TRACED BY	"
NOTE BOOK	DESIGNED BY	"
	QUANTITIES BY	"
No.	CHECKED BY	"

PRINTED ON NO. 1000H CLEARPRINT

35

FED. ROAD DIST. NO.	STATE	FED. AID PROJ. NO.	FISCAL YEAR	SHEET NO.	TOTAL SHEETS
HAWAII	HAW.	I-HI-1(89)13	1972	355-1	362

8"x 24" Sign Plates back to back and fastened together with two rivets or bolts top and bottom diagonally at every emergency panel. Sign shall also be centered on the panel. See Detail "A" for Letter Size.

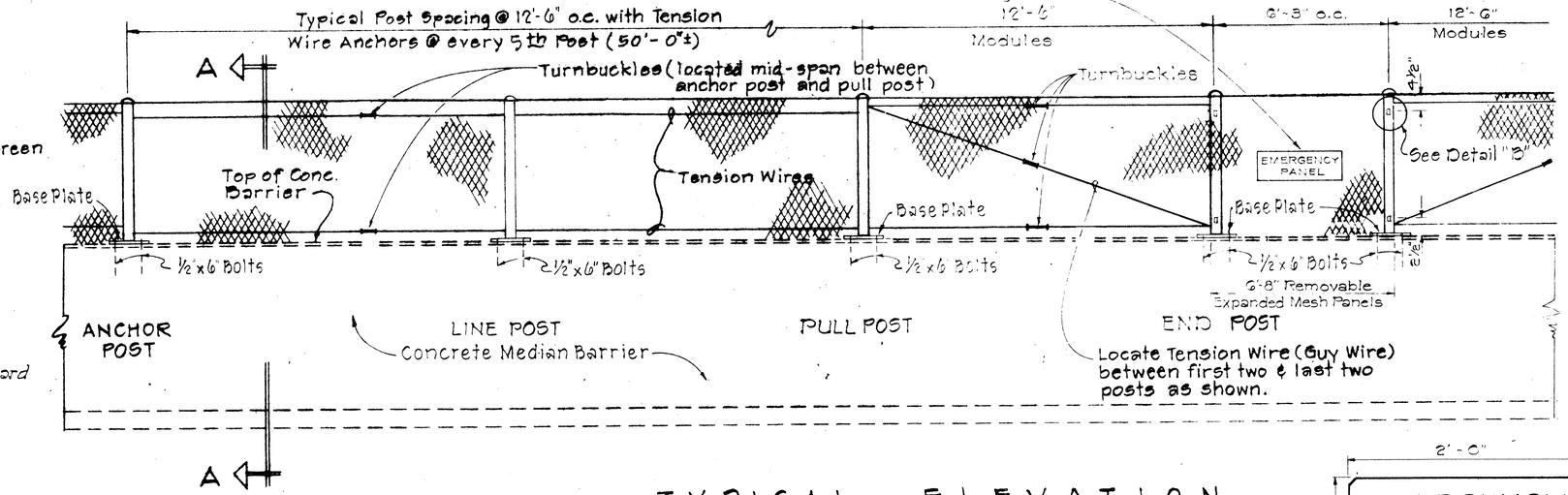

TYPICAL ELEVATION

Not to Scale

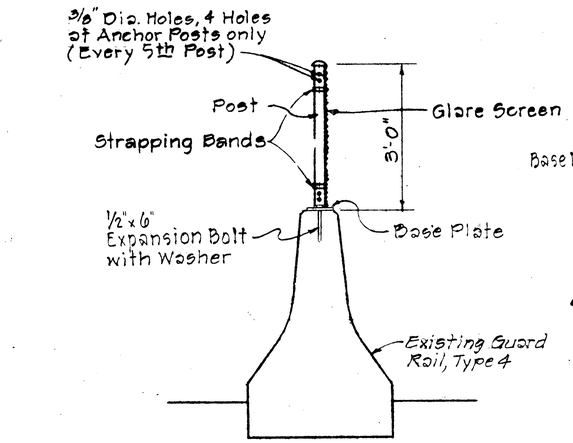

SECTION A-A

Not To Scale

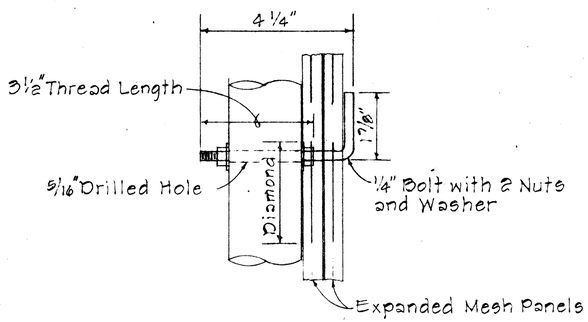

DETAIL B

Half Full Size

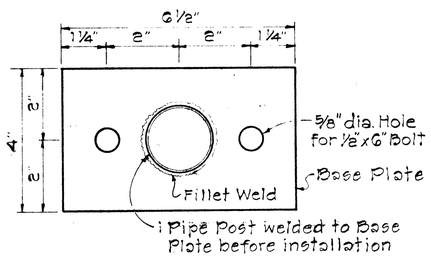

BASE PLATE DETAIL

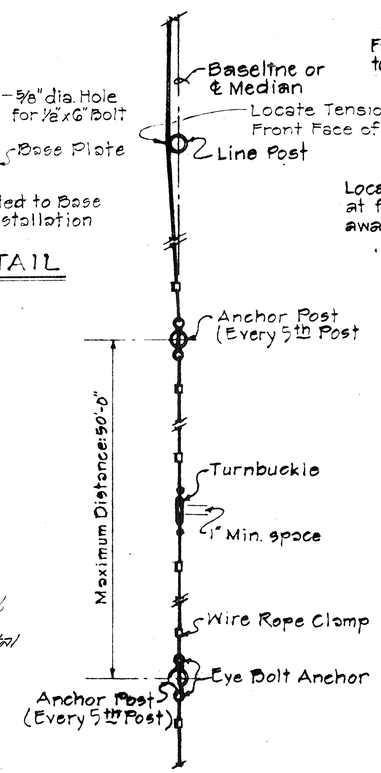

TENSION WIRE CONNECTIONS

Scale: 1½"=1'-0"

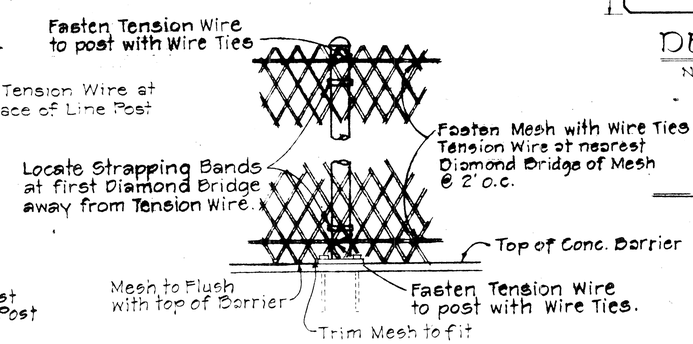

LINE POST CONNECTIONS

(Viewed From Mesh Side)

Scale: 1½"=1'-0"

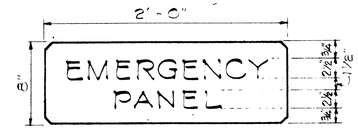

DETAIL "A"

NOT TO SCALE

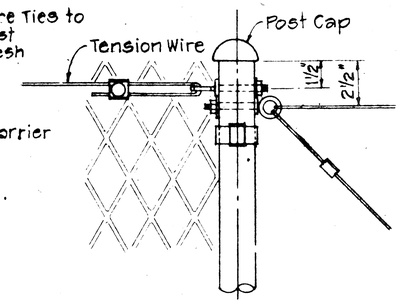

PULL POST DETAIL

Scale: 3"=1'-0"

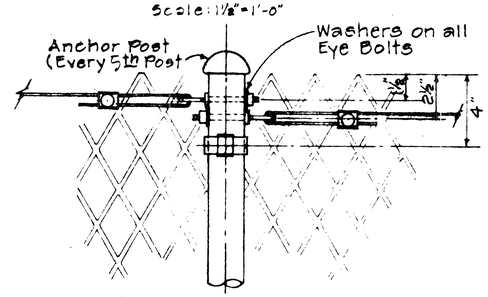

TENSION WIRE ANCHOR DETAIL

Scale: 3"=1'-0"

NOTES:

1. Install Removable Expanded Mesh Panels at approximately 600 ft. intervals. Vary spacing to provide a removal panel at each structure crossing over Highway.
2. Removable Expanded Mesh Panels will be paid for under pay item 660.01-Headlight Glare Screen.
3. The words "EMERGENCY PANEL" shall be black on reflectorized yellow background panel, 0.063" thick aluminum.
4. "EMERGENCY PANEL" sign plates shall not be paid for separately but shall be incidental to Headlight Glare Screen. Approximate quantity of sign plates is 6.
5. Removable connections shall be designed so that the panels can be removed easily but also snug enough to prevent shaking or accidental removal.
6. Removable Expanded Mesh Panels shall also be reinforced by stiffeners at the upper and lower ends of the panels. Six (6) sets of the shop drawings shall be submitted to the Engineer for approval.

ORIGINALLY PLAN	SURVEY PLOTTED BY	DRAWN BY	TRACED BY	DESIGNED BY	QUANTITIES BY	CHECKED BY	DATE
NOTE BOOK							

STATE OF HAWAII
DEPARTMENT OF TRANSPORTATION
HIGHWAYS DIVISION

HEADLIGHT GLARE SCREEN

FAI PROJ. No. I-HI-1(89):13

SCALE: AS NOTED AUG. 1972

SHEET No. OF SHEETS

CO 35S-1

7/19/73

FED. ROAD DIST. NO.	STATE	FED. AID PROJ. NO.	FISCAL YEAR	SHEET NO.	TOTAL SHEETS
HAWAII	HAW.	I-HI-1(89)13	1971	36	362

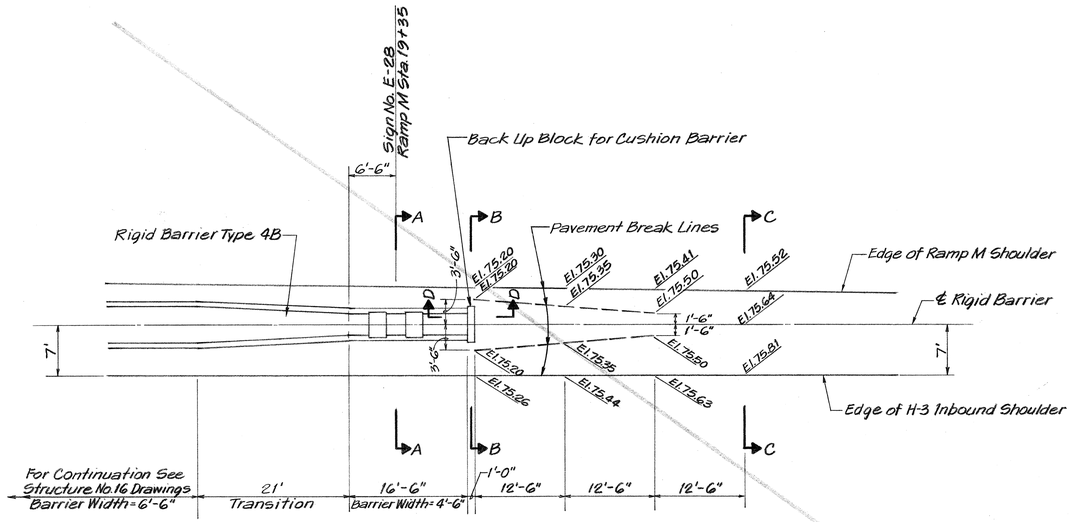

PLAN

Scale: 1" = 10'-0"

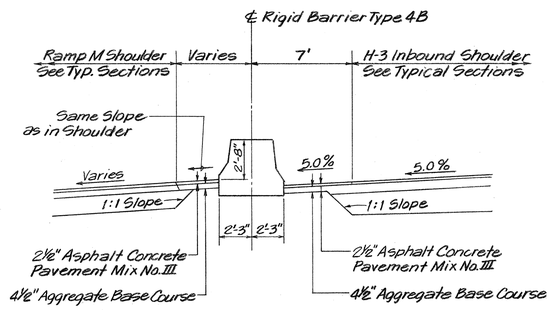

SECTION A-A

Scale: 1" = 5'-0"

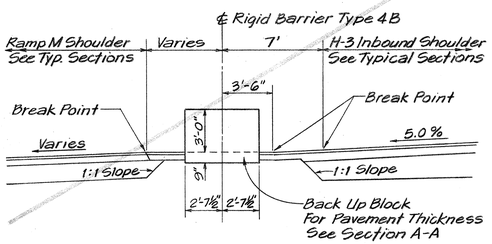

SECTION B-B

Scale: 1" = 5'-0"

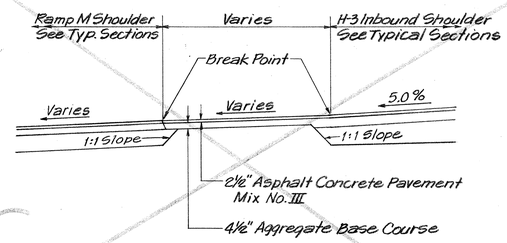

SECTION C-C

Scale: 1" = 5'-0"

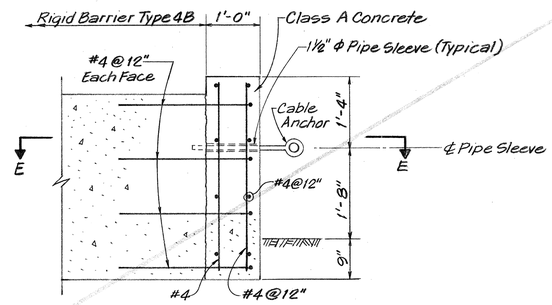

SECTION D-D (BACK UP BLOCK DETAIL)

Scale: 3/4" = 1'-0"

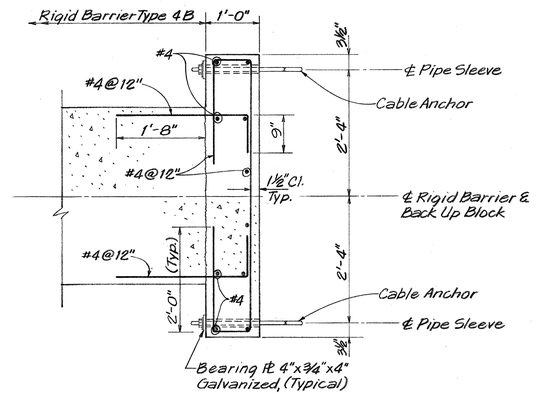

SECTION E-E (BACK UP BLOCK DETAIL)

Scale: 3/4" = 1'-0"

NOTE:

Payment for Back Up Block and Cable Anchorage shall be Incidental to the Cost of Cushion Barrier.

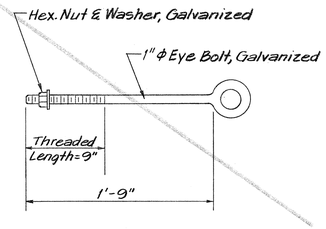

CABLE ANCHOR DETAIL

Scale: 1½" = 1'-0"

N.I.C.

DETAILS OF RIGID BARRIER AND BACK UP BLOCK AT INTERSTATE ROUTE H-3 & RAMP M GORE

J. ANDREW SCHUCHARDT
REGISTERED PROFESSIONAL ENGINEER
No. 2229
HAWAII, U.S.A.

THIS WORK WAS PREPARED BY ME OR UNDER MY SUPERVISION.

J. Andrew Schuchardt

STATE OF HAWAII
DEPARTMENT OF TRANSPORTATION
HIGHWAYS DIVISION

MISCELLANEOUS ROADWAY DETAILS
RIGID BARRIER & BACK UP BLOCK

INTERSTATE ROUTE H-1
PROJECT NO. I-H1-1(89):13

SCALE: AS SHOWN DATE: Oct. 30, 1970

SHEET No. 10 B OF 25 SHEETS

ORIGINAL PLAN	SURVEY PLOTTED BY	DATE
	DRAWN BY	
	TRACED BY	
NOTE BOOK	DESIGNED BY	
	QUANTITIES BY	
No.	CHECKED BY	

PRINTED ON NO. 1000H CLEARPRINT

36

FED. ROAD DIST. NO.	STATE	FED. AID PROJ. NO.	FISCAL YEAR	SHEET NO.	TOTAL SHEETS
HAWAII	HAW.	I-H1-1(89):13	1971	37	362

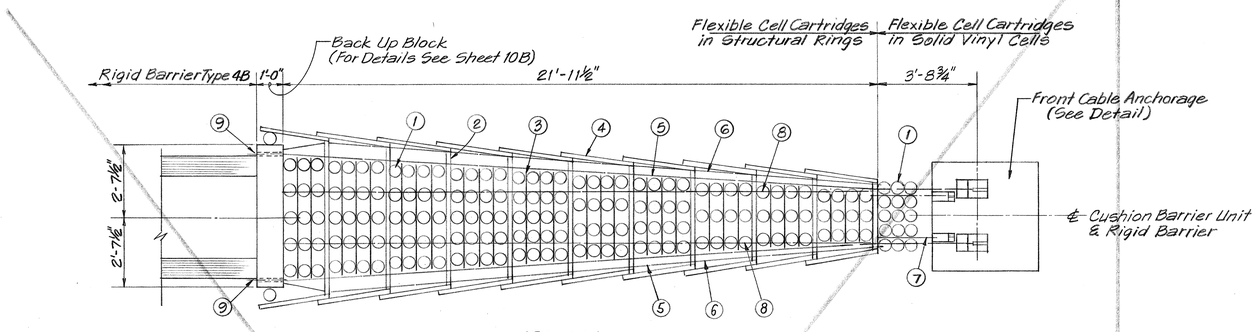

PLAN

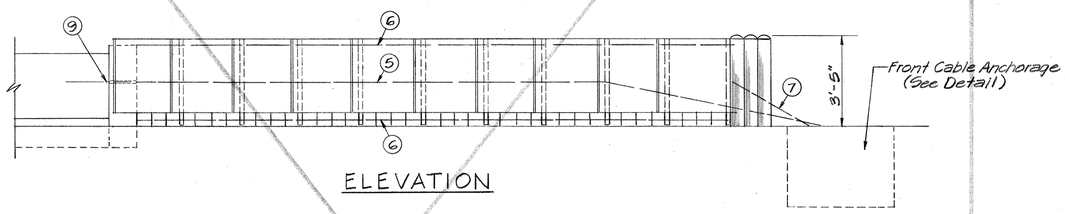

ELEVATION

Legend:

1. Cushion Cells (6" ± O.D.)
2. Diaphragms
3. Interior Panels
4. Fender Panels
5. Restraining Cable
6. Pull-Out Cable
7. Secondary Cable
8. Slide Straps
9. Rear Cable Anchor

CUSHION BARRIER LAYOUT

Scale: 3/8" = 1'-0"

N.I.C.

TABLE OF CENTERLINE & REFERENCE SURVEY MONUMENTS				
ROADWAY	℄ STATION	OFFSET	QUANTITIES	
			℄ MONUMENTS	REF. SURVEY MON.
MOANALUA FRWY.	166+43.90	6.00' RT.		1
"	173+30.77	6.00' RT.		1
"	199+35.01	6.00' RT.		1
"	200+38.76	6.00' RT.		1
"	206+97.69	6.00' RT.		1
"	208+01.43	6.00' RT.		1

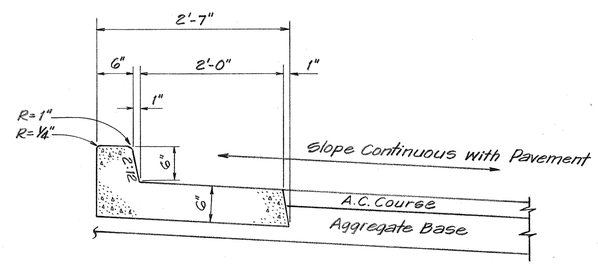

TYPE "2CG" CAST-IN-PLACE CONCRETE CURB & GUTTER

Scale: 1" = 1'-0"

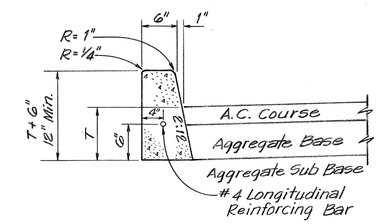

CURB, TYPE "2D"

Scale: 1" = 1'-0"

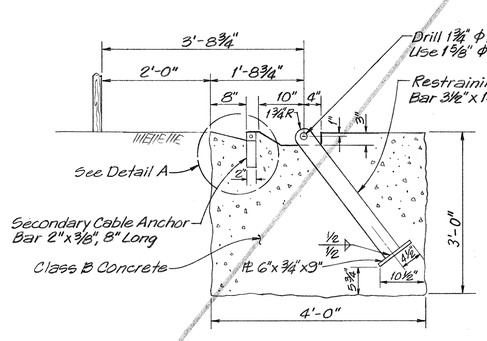

SECTION A-A

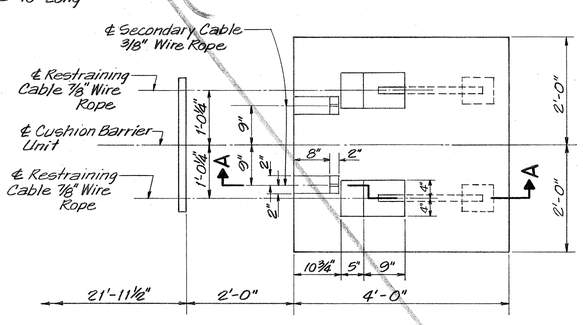

PLAN

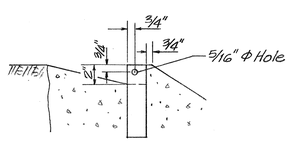

DETAIL A

N.T.S.

FRONT CABLE ANCHORAGE DETAILS

Scale: ¾" = 1'-0"

NOTES:

1. Payment for Front Cable Anchorage shall be Incidental to the Cost of Cushion Barrier.
2. All Structural Steel shall be Galvanized after Fabrication.

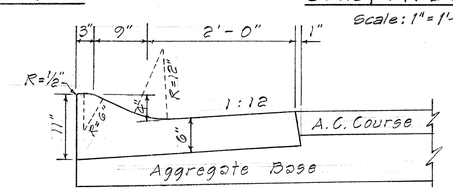

TYPE "2EG" CAST-IN-PLACE CONCRETE CURB & GUTTER

Scale: 1" = 1'-0"

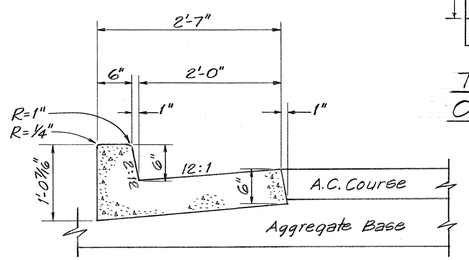

TYPE "2DG" CAST-IN-PLACE CONCRETE CURB & GUTTER

Scale: 1" = 1'-0"

J. ANDREW SCHUCHARDT
REGISTERED PROFESSIONAL ENGINEER
No. 2229
HAWAII, U.S.A.

THIS WORK WAS PREPARED BY ME OR UNDER MY SUPERVISION.

J. Andrew Schuchardt

STATE OF HAWAII
DEPARTMENT OF TRANSPORTATION
HIGHWAYS DIVISION

MISCELLANEOUS ROADWAY DETAILS
CUSHION BARRIER, CURB & GUTTER

INTERSTATE ROUTE H-1
PROJECT NO. I-H1-1(89):13

SCALE: AS SHOWN DATE: Oct. 30, 1970

SHEET No. 11B OF 25 SHEETS

ORIGINAL PLAN	SURVEY PLOTTED BY	DATE
	TRACED BY	
	DESIGNED BY	
NOTE BOOK	QUANTITIES BY	
No.	CHECKED BY	

PRINTED ON NO. 1000H CLEARPRINT

FED. ROAD DIST. NO.	STATE	FED. AID PROJ. NO.	FISCAL YEAR	SHEET NO.	TOTAL SHEETS
HAWAII	HAW.	I-H1-1(89):13	1971	38	362

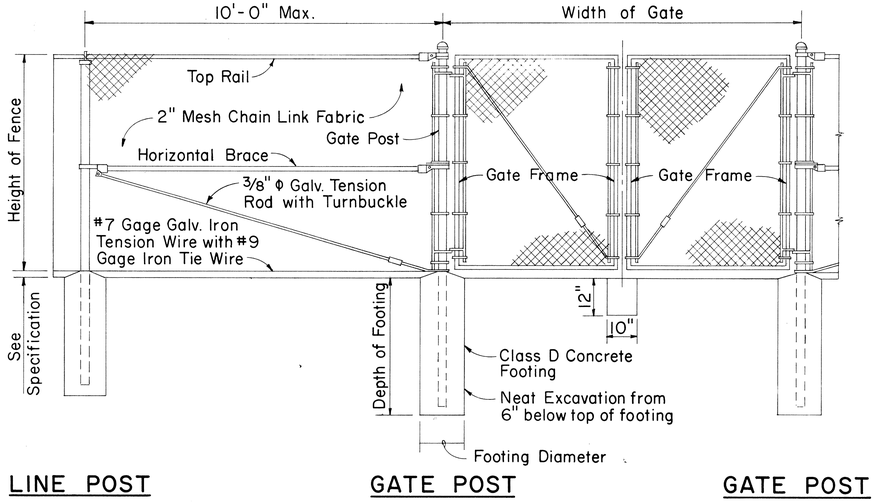

DETAIL OF CHAIN LINK GATE

NOTE:
1. Gate fork latch and lock, flush plate and anchor, and plunger shall be installed with Gates, and shall be considered as incidental to Chain Link Fence Gate.
2. Gate frames shall be mitered and welded at corners.
3. Fence detail not shown shall be in accordance with the Standard Specifications.
4. *Padlock (Combination type) shall be provided, and shall be considered as incidental to Chain Link Gate.*

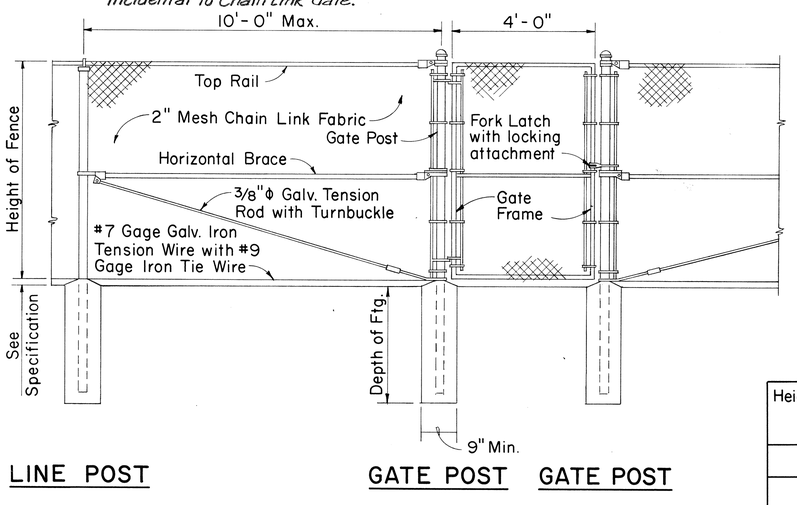

DETAIL OF 4 FT. CHAIN LINK GATE

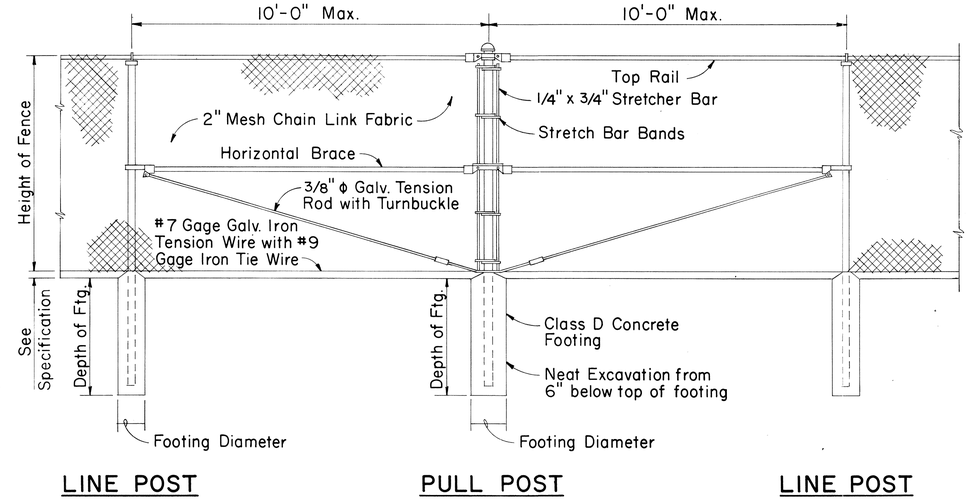

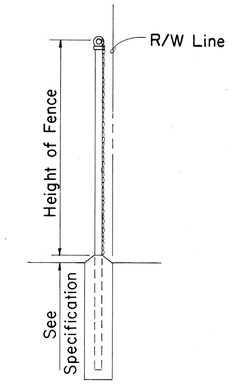

TYPICAL SECTION (WITH CONCRETE FOOTING)

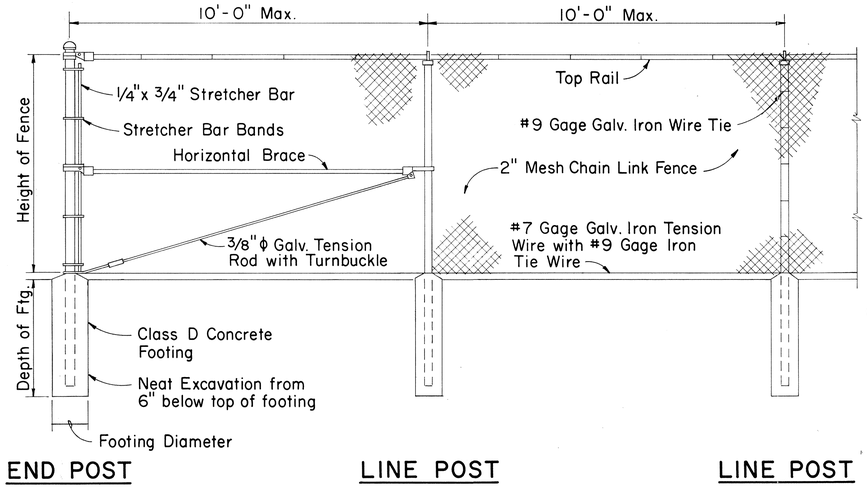

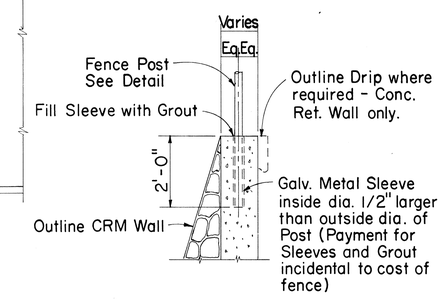

TYPICAL SECTION (ON CRM & CONC. RET. WALL)

CHAIN LINK FENCE DETAILS

Height of Fence	Minimum Depth of Footing		Minimum Footing Diameter	
	Line Post	Corner, Pull, End and Gate Posts	Line Post	Corner, Pull and End Posts
3'	2'-0"	2'-6"	8"	8"
4'	2'-6"	2'-6"	8"	8"
5'	3'-0"	3'-0"	8"	8"
6'	3'-0"	3'-0"	8"	9"

APPROVAL RECOMMENDED:
HIGHWAY DESIGN ENGINEER — DATE 12-4-69

APPROVED:
ASSISTANT CHIEF, ENGINEERING — DATE 12-10-69

NO.	REVISION	APPROVED BY	DATE

STATE OF HAWAII
DEPARTMENT OF TRANSPORTATION
HIGHWAYS DIVISION

STANDARD DETAILS

CHAIN LINK FENCE (WITH TOPRAIL)

Scale: 1/2" = 1'-0" Date: OCT. 30, 1970

SHEET No. 128 OF 25 SHEETS | DD 607.1

ORIGINAL PLAN | SURVEY PLOTTED BY | DRAWN BY | TRACED BY | DESIGNED BY | QUANTITIES BY | CHECKED BY | DATE | NOTE BOOK No.

FED. ROAD DIST. NO.	STATE	FED. AID PROJ. NO.	FISCAL YEAR	SHEET NO.	TOTAL SHEETS
HAWAII	HAW.	I-H1-1(89):13	1971	39	362

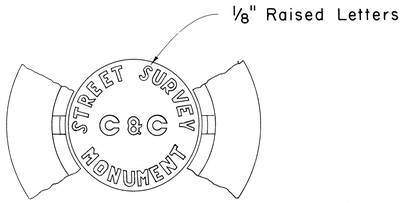

TOP VIEW OF COVER AND PORTION OF FRAME

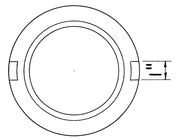

BOTTOM OF COVER

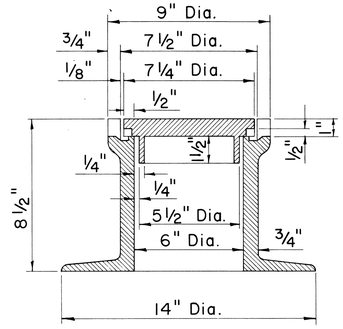

SECTIONAL VIEW OF FRAME AND COVER

STREET SURVEY MONUMENT CASTINGS

Scale: 3" = 1'-0"

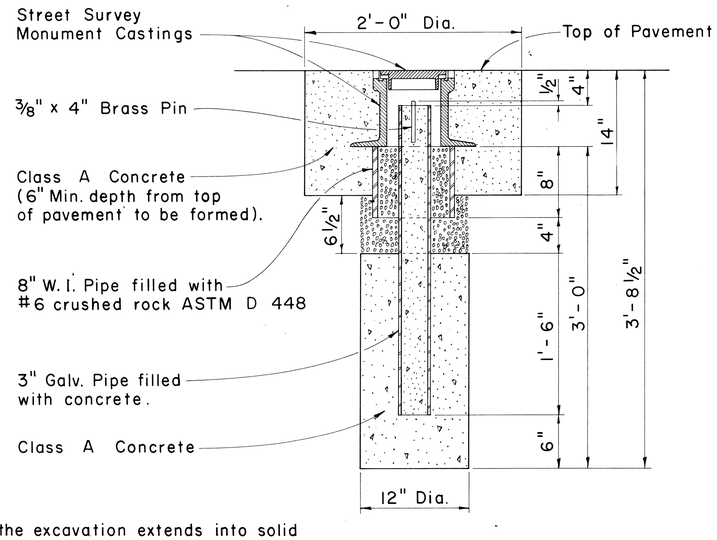

NOTE:

Where the excavation extends into solid rock the depth may be decreased if approved by the Engineer.

STREET SURVEY MONUMENT

Scale: 1 1/2" = 1'-0"

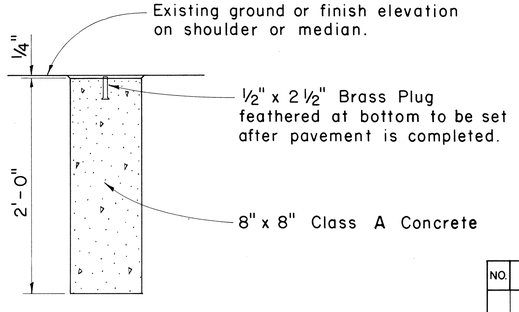

DETAIL FOR ℄ AND REFERENCE SURVEY MONUMENT

Scale: 1 1/2" = 1'-0"

APPROVAL RECOMMENDED:

HIGHWAY DESIGN ENGINEER — DATE: 12-4-69

APPROVED:

ASSISTANT CHIEF, ENGINEERING — DATE: 12-10-69

NO.	REVISION	APPROVED BY	DATE

STATE OF HAWAII
DEPARTMENT OF TRANSPORTATION
HIGHWAYS DIVISION

STANDARD DETAILS

CENTERLINE, REFERENCE SURVEY AND C & C STREET SURVEY MONUMENTS

Scale: As Shown — DATE: OCT. 30, 1970

SHEET No. 13B OF 25 SHEETS — DD 613.1

ORIGINAL PLAN	SURVEY PLOTTED BY	DATE
	DRAWN BY	"
	TRACED BY	"
NOTE BOOK	DESIGNED BY	"
	QUANTITIES BY	"
No.	CHECKED BY	"

FED. ROAD DIST. NO.	STATE	FED. AID PROJ. NO.	FISCAL YEAR	SHEET NO.	TOTAL SHEETS
HAWAII	HAW.	F-HI-1(89):13	1971	40	362

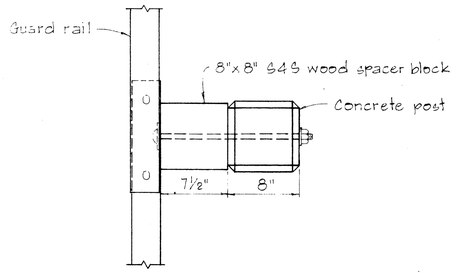

PLAN

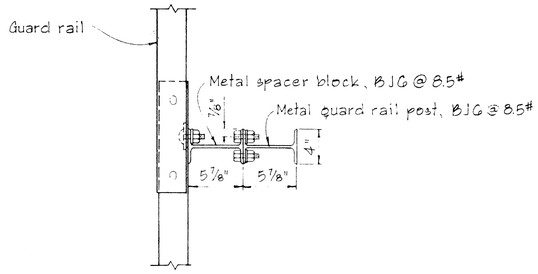

PLAN

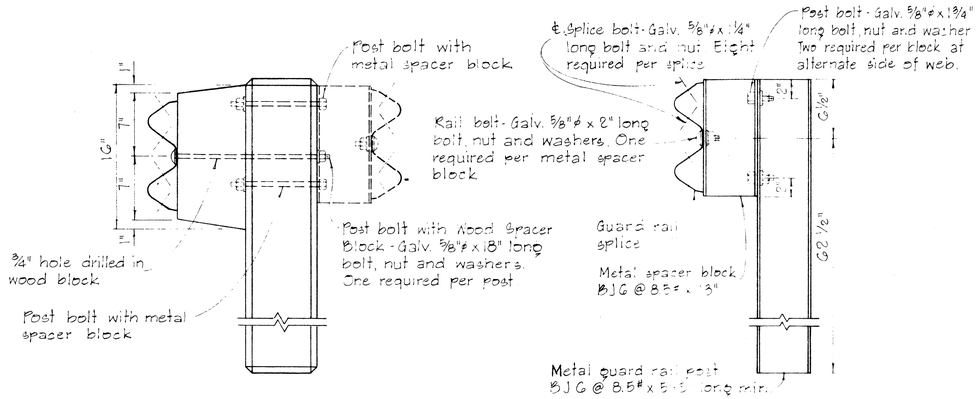

SINGLE METAL GUARD RAIL ON METAL POST WITH METAL SPACER BLOCK

SCALE: 1½" = 1'-0"

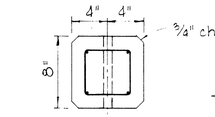

TOP VIEW

NOTE:
Concrete post shall be precast

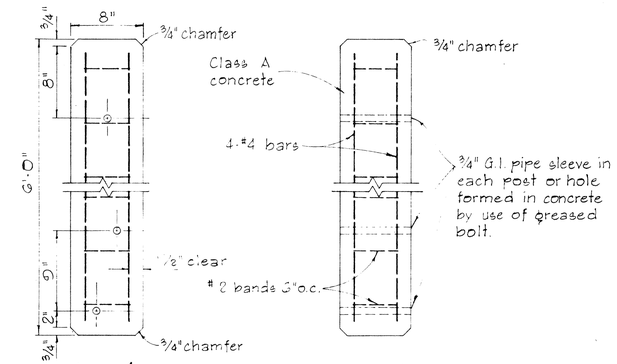

FRONT VIEW

SIDE VIEW

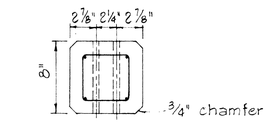

BOTTOM VIEW

DETAIL OF CONCRETE POST

SCALE: 1½" = 1'-0"

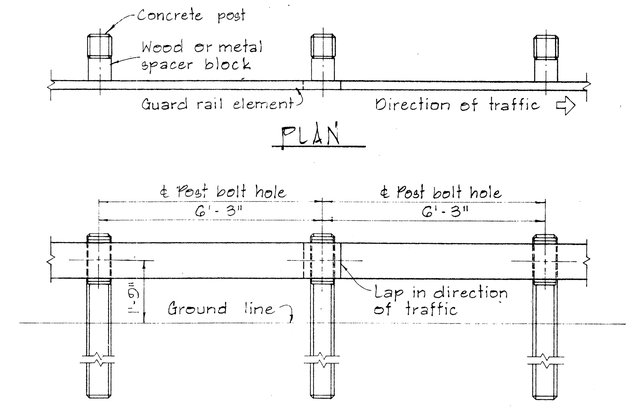

PLAN

ELEVATION

METAL GUARD RAIL ON CONCRETE POST WITH WOOD OR METAL SPACER BLOCK

SCALE: ½" = 1'-0"

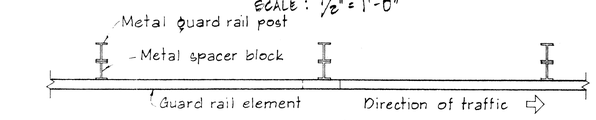

PLAN

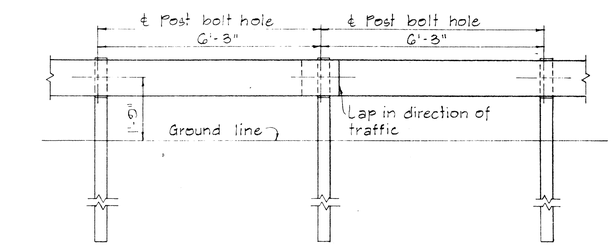

ELEVATION

METAL GUARD RAIL ON METAL POST WITH METAL SPACER BLOCK

SCALE: ½" = 1'-0"

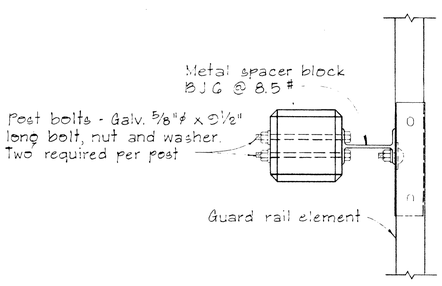

PLAN

SINGLE METAL GUARD RAIL ON PRECAST CONCRETE POST WITH WOOD OR METAL SPACER BLOCK

SCALE: 1½" = 1'-0"

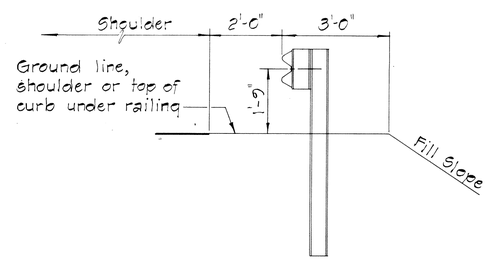

AT SHOULDER SECTION

TYPICAL METAL GUARD RAIL DETAIL

SCALE: ½" = 1'-0"

APPROVAL RECOMMENDED:
Eichi Tanaka — 12/23/62
TRAFFIC ENGINEER — DATE

APPROVED:
Filbert T. Sakai — 12-30-69
ASSISTANT CHIEF, ENGINEERING — DATE

NO.	REVISION	APPROVED BY	DATE

STATE OF HAWAII
DEPARTMENT OF TRANSPORTATION
HIGHWAYS DIVISION

STANDARD DETAILS

METAL GUARD RAIL

SCALE: AS SHOWN — NOV. 1968

SHEET No. 14B OF 25 SHEETS — DT 500

ORIGINAL PLAN	SURVEY PLOTTED BY	DATE
	DRAWN BY	
	TRACED BY	
NOTE BOOK	REVIEWED BY	
No.	QUANTITIES BY	
	CHECKED BY	

PRINTED ON NO. 1000H CLEARPRINT

FED. ROAD DIST. NO.	STATE	FED. AID PROJ. NO.	FISCAL YEAR	SHEET NO.	TOTAL SHEETS
HAWAII	HAW.	I-H1-1(89):13	1971	41	362

BOLT DIMENSIONS		
TYPE A BOLT	D	L
Splice Bolt	5/16"	1 1/4"
Post Bolt for Conc. Post w/ Double Wood Blocks	3/32"	24"
Post Bolt for Conc. Post w/ Single Wood Block	3/32"	18"
Rail Bolt for Metal Block	3/32"	2"

BOLT DIMENSIONS	
TYPE B BOLT	L
Post Bolt for Conc. Post w/ Metal Blocks	9 1/2"
Post Bolt for Metal Post w/ Metal Block	1 3/4"

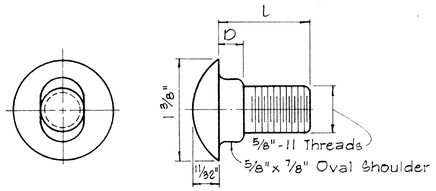

TYPE A BOLT

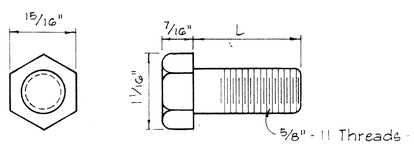

TYPE B BOLT

SPLICE RAIL AND POST BOLTS

Scale: Full Size

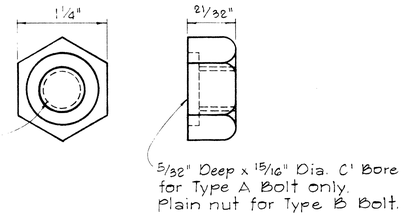

HEXAGON NUT

Scale: Full Size

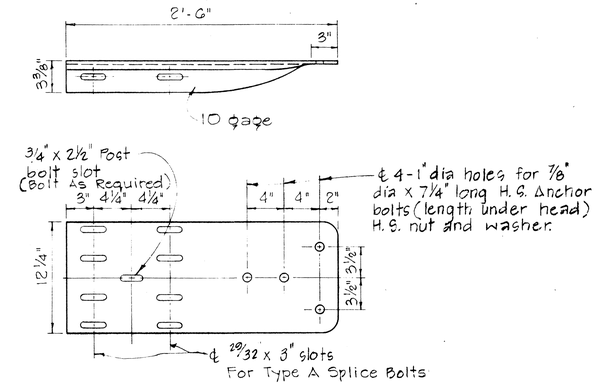

SPECIAL END SHOE

Scale: 1 1/2" = 1'-0"

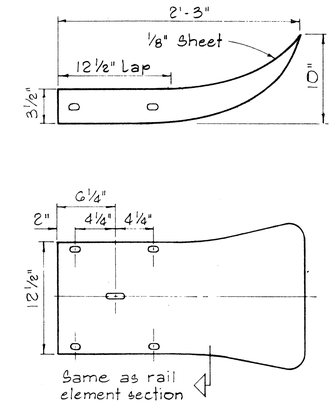

FLARED END

Scale: 1 1/2" = 1'-0"

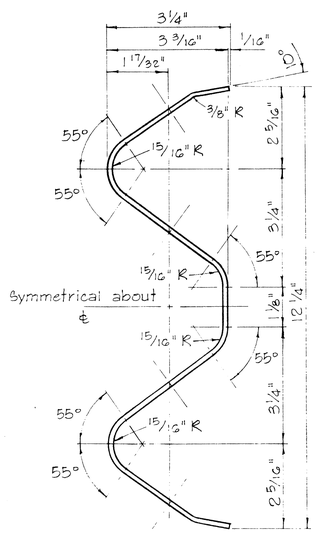

RAIL ELEMENT SECTION

Scale: 6" = 1'-0"

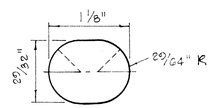

SPLICE BOLT SLOT

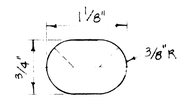

SPLICE BOLT SLOT FOR ALL ENDS

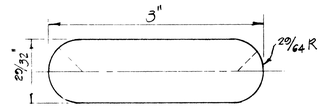

SPLICE BOLT SLOT FOR SPECIAL END SHOE

Scale: Full Size

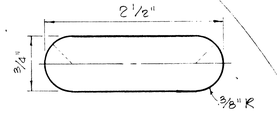

POST BOLT SLOT

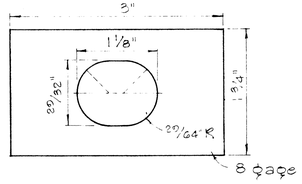

RAIL WASHER

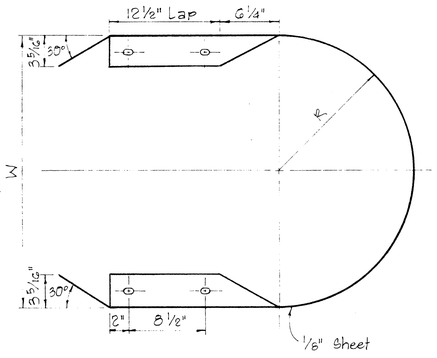

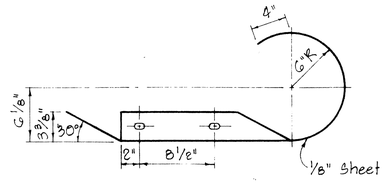

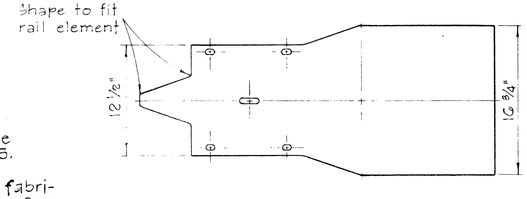

MEDIAN END

Scale: 1 1/2" = 1'-0"

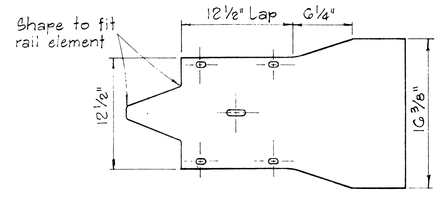

CURVED END

Scale: 1 1/2" = 1'-0"

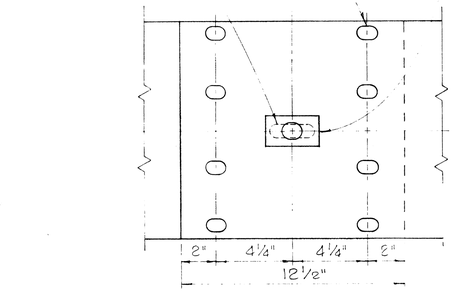

RAIL SPLICE

Scale: 3" = 1'-0"

NOTES:

1. H.S. Bolts shall conform to the requirements of ASTM A 325.
2. Special End Shoe shall be fabricated from 10 Gage steel conforming to the requirements of AASHO 180.

MEDIAN END DIMENSIONS		
TYPE OF POST AND BLOCK	W	R
Double Metal Guard Rail on Concrete Post with Wood Blocks	29 3/4"	14 7/8"
Double Metal Guard Rail on Concrete Post with Metal Blocks (BJG)	26 1/2"	13 1/4"
Double Metal Guard Rail on Metal Post with Metal Blocks (BJG)	24 3/8"	12 3/16"

NO	REVISION	APPROVED BY	DATE

APPROVAL RECOMMENDED:
Eiichi Tanaka — 12/20/69
TRAFFIC ENGINEER — DATE

APPROVED:
Hulu O Sato — 12-30-69
ASSISTANT CHIEF, ENGINEERING — DATE

STATE OF HAWAII
DEPARTMENT OF TRANSPORTATION
HIGHWAYS DIVISION

STANDARD DETAILS
METAL GUARD RAIL

Scale: As Noted — August, 1968

SHEET No. 158 OF 25 SHEETS | DT 501

ORIGINAL PLAN	SURVEY PLOTTED BY	DATE
	DRAWN BY	
	TRACED BY	
NOTE BOOK	DESIGNED BY	
	QUANTITIES BY	
No.	CHECKED BY	

PRINTED ON NO. 1000H CLEARPRINT

4 of 1

FED. ROAD DIST. NO.	STATE	FED. AID PROJ. NO.	FISCAL YEAR	SHEET NO.	TOTAL SHEETS
HAWAII	HAW.	I-H1-1(89)13	1971	42	362

NOTE:
Metal guard rail connection to structures requires End Post Connection. See structure plans.

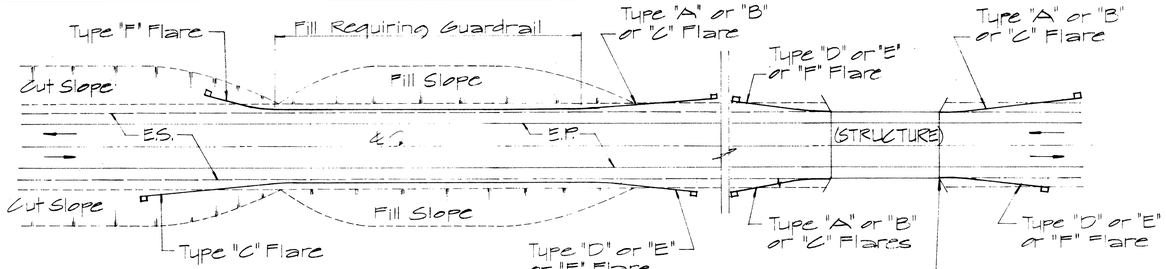

PLAN
TWO WAY ROADWAY
Sc. 1" = 40'

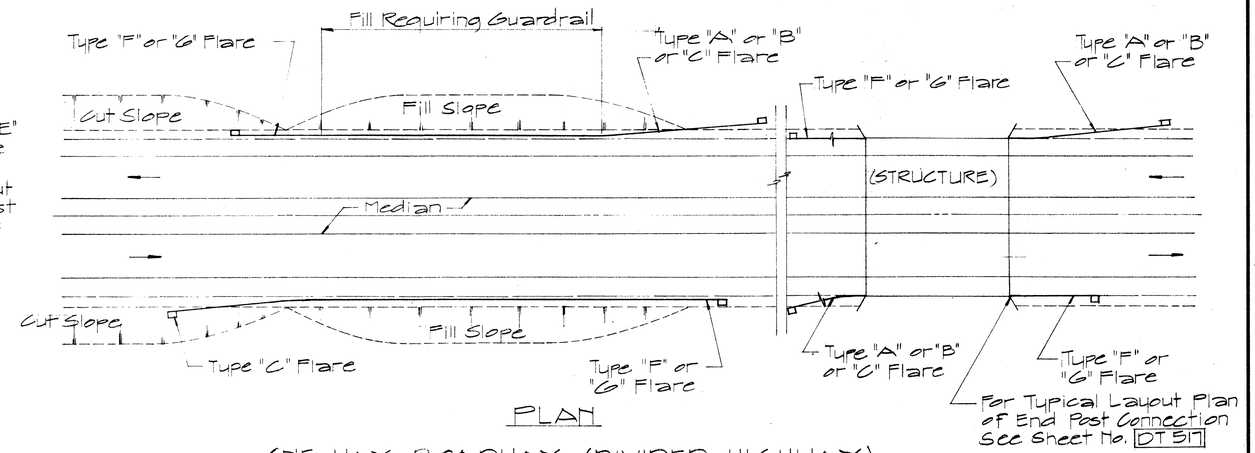

PLAN
ONE WAY ROADWAY (DIVIDED HIGHWAY)
Sc. 1" = 40'

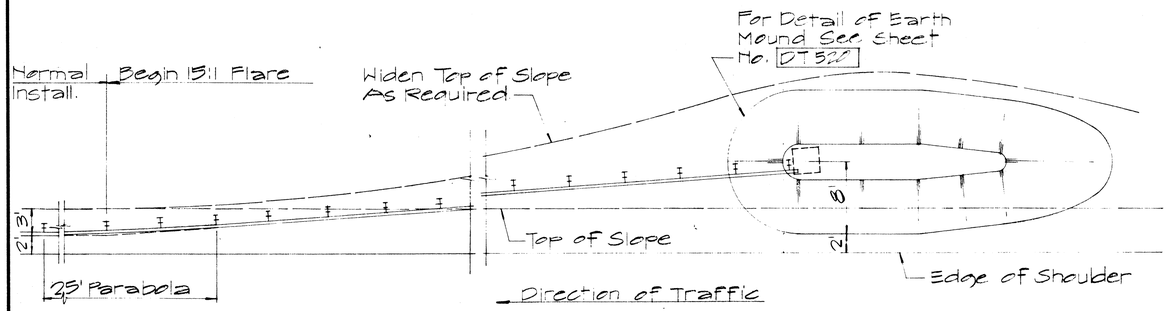

PLAN

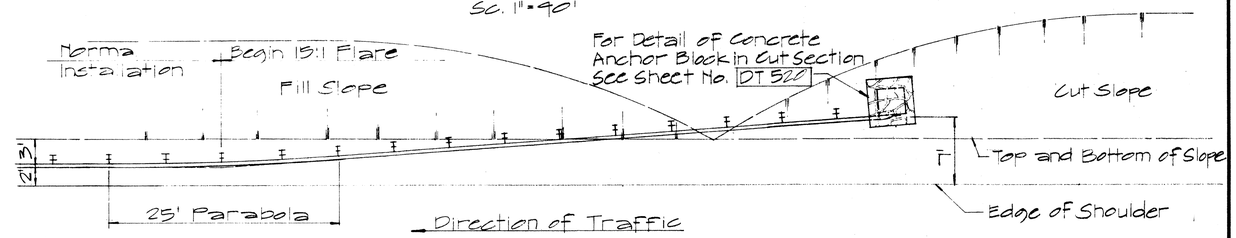

PLAN

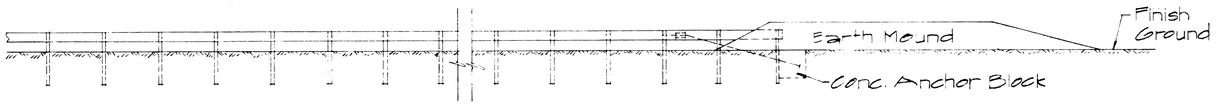

ELEVATION
TYPE "A" FLARE
Sc. 1/8" = 1'-0"

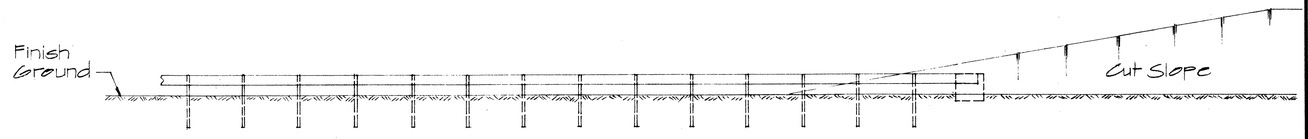

ELEVATION
TYPE "C" FLARE
Sc. 1/8" = 1'-0"

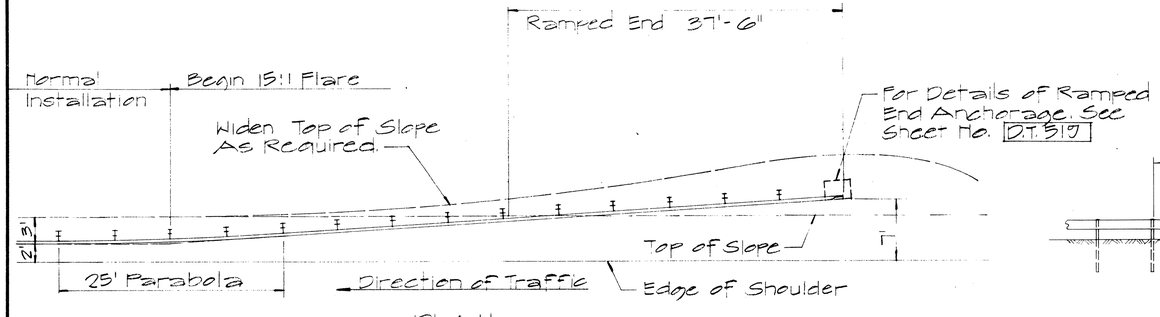

PLAN

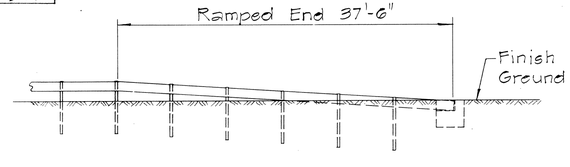

ELEVATION

TYPE "B" FLARE
Sc. 1/8" = 1'-0"

APPROVAL RECOMMENDED:
Euichi Tanaka
TRAFFIC ENGINEER — DATE 12/29/69

APPROVED:
Alvin E. Deleski
ASSISTANT CHIEF, ENGINEERING — DATE 12-30-69

NO.	REVISION	APPROVED BY	DATE

STATE OF HAWAII
DEPARTMENT OF TRANSPORTATION
HIGHWAYS DIVISION

STANDARD DETAILS OF APPROACH END FLARE - ONE & TWO WAY ROADWAY

Sc. As Noted — April 1969

SHEET No. 16B OF 25 SHEETS | DT 516

ORIGINAL PLAN	SURVEY PLOTTED BY	DATE
	DRAWN BY	
	TRACED BY	
NOTE BOOK	DESIGNED BY	
No.	QUANTITIES BY	
	CHECKED BY	

PRINTED ON NO. 1000H CLEARPRINT

FED. ROAD DIST. NO.	STATE	FED. AID PROJ. NO.	FISCAL YEAR	SHEET NO.	TOTAL SHEETS
HAWAII	HAW.	I-H1-1(89):13	1971	43	362

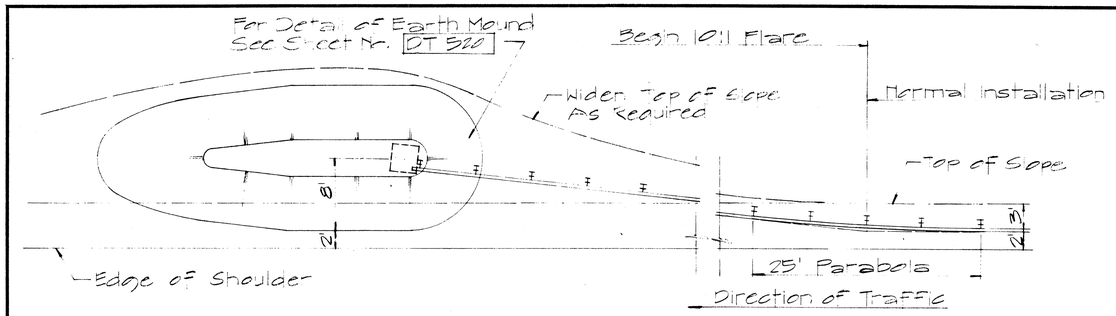

PLAN

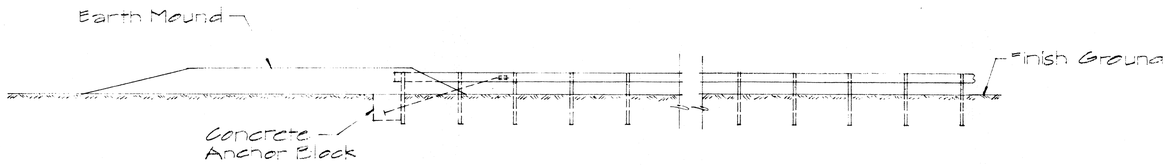

ELEVATION

TYPE "D" FLARE
Sc. 1/8" = 1'-0"

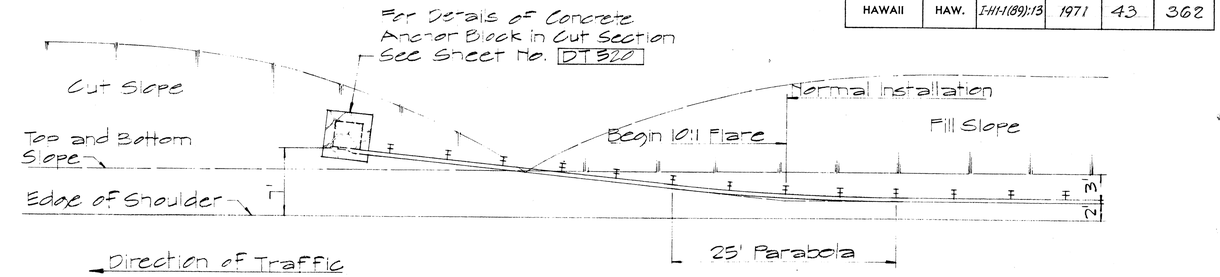

PLAN

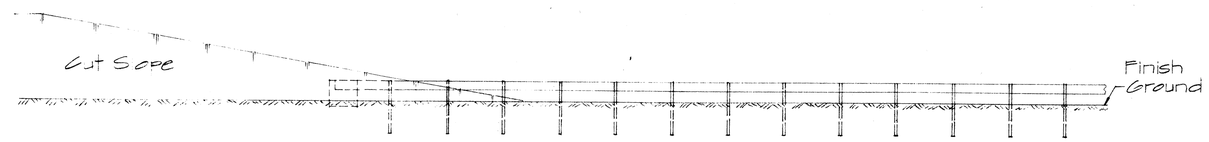

ELEVATION

TYPE "F" FLARE
Sc. 1/8" = 1'-0"

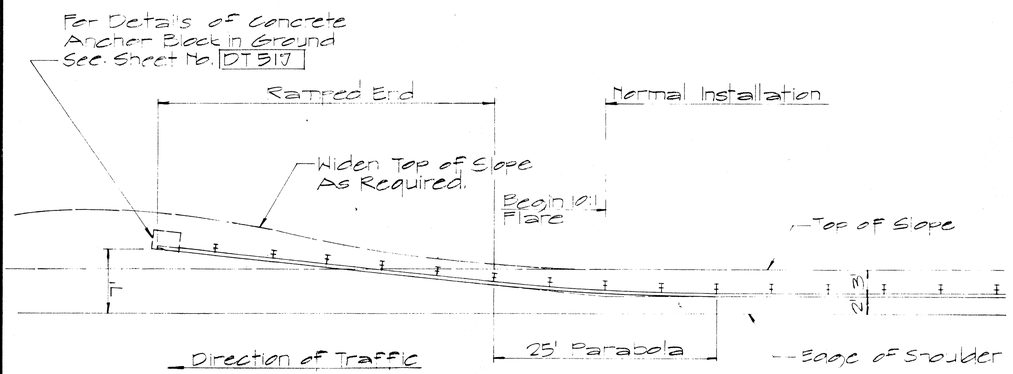

PLAN

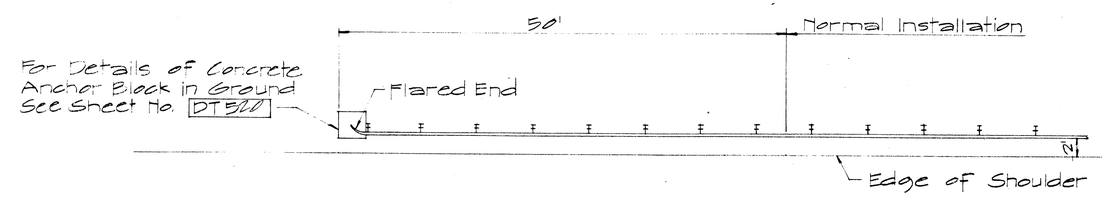

PLAN

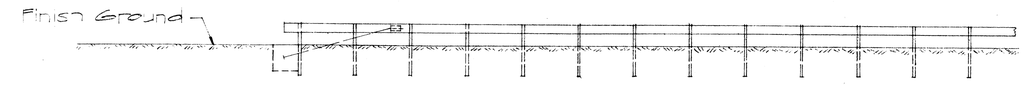

ELEVATION

TYPE "G" FLARE
Sc. 1/8" = 1'-0"

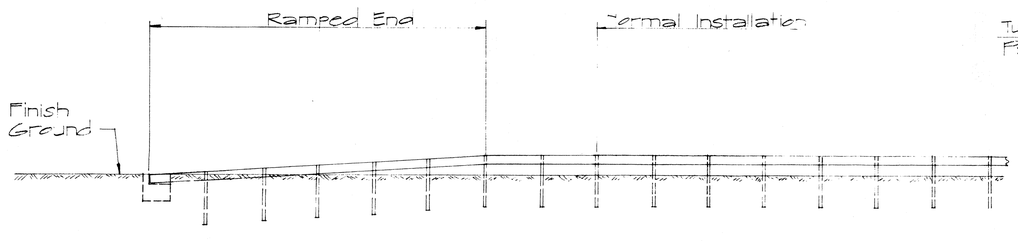

ELEVATION

TYPE "E" FLARE
Sc. 1/8" = 1'-0"

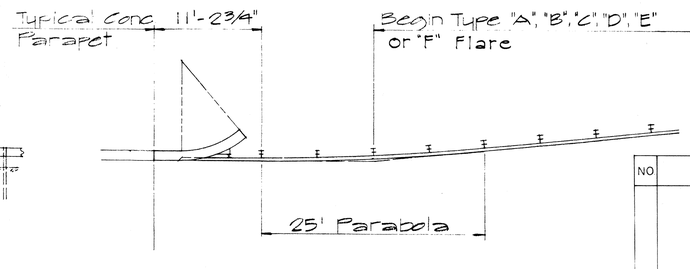

TYPICAL LAYOUT PLAN OF
END POST CONNECTION
Sc. 1/8" = 1'-0"

APPROVAL RECOMMENDED:
Eiichi Tanaka — 12/29/69
TRAFFIC ENGINEER — DATE

APPROVED:
[signature] — 12-30-69
ASSISTANT CHIEF, ENGINEERING — DATE

NO	REVISION	APPROVED BY	DATE

STATE OF HAWAII
DEPARTMENT OF TRANSPORTATION
HIGHWAYS DIVISION

STANDARD DETAILS
OF TRAILING END
FLARE - ONE & TWO
WAY ROADWAY

Sc. As Noted — April 1969

SHEET No. 178 OF 25 SHEETS | DT 517

ORIGINAL PLAN		
	SURVEY PLOTTED BY	DATE
	DRAWN BY	
	TRACED BY	
NOTE BOOK	DESIGNED BY	
	QUANTITIES BY	
No.	CHECKED BY	

PRINTED ON NO. 1000H CLEARPRINT

FED. ROAD DIST. NO.	STATE	FED. AID PROJ. NO.	FISCAL YEAR	SHEET NO.	TOTAL SHEETS
HAWAII	HAW.	I-H1-1(89):13	1971	44	362

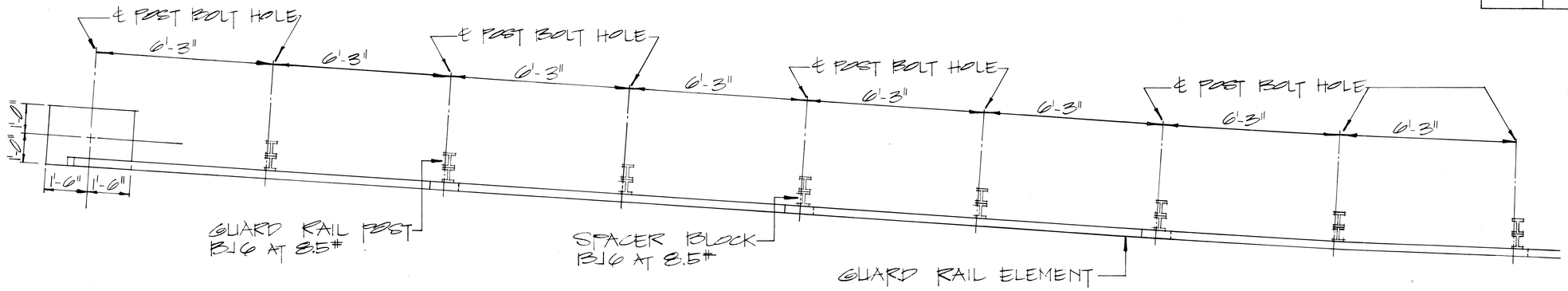

PLAN

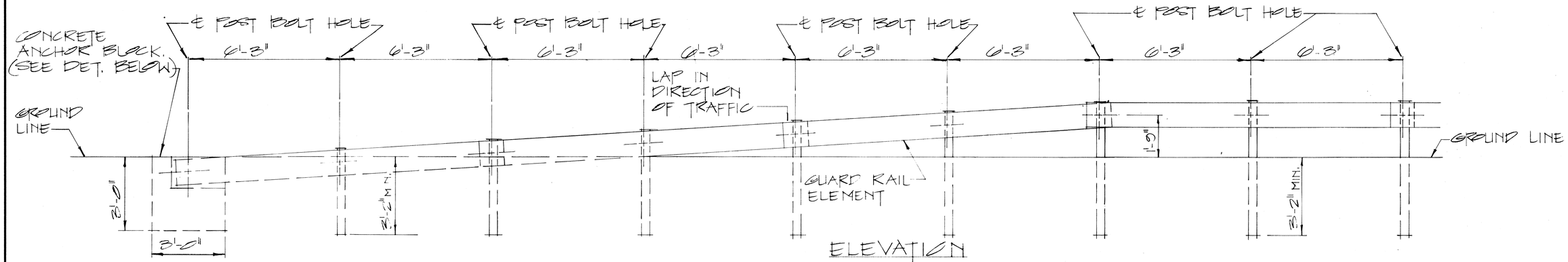

ELEVATION

RAMP END ANCHORAGE

SCALE: 1/2" = 1'-0"

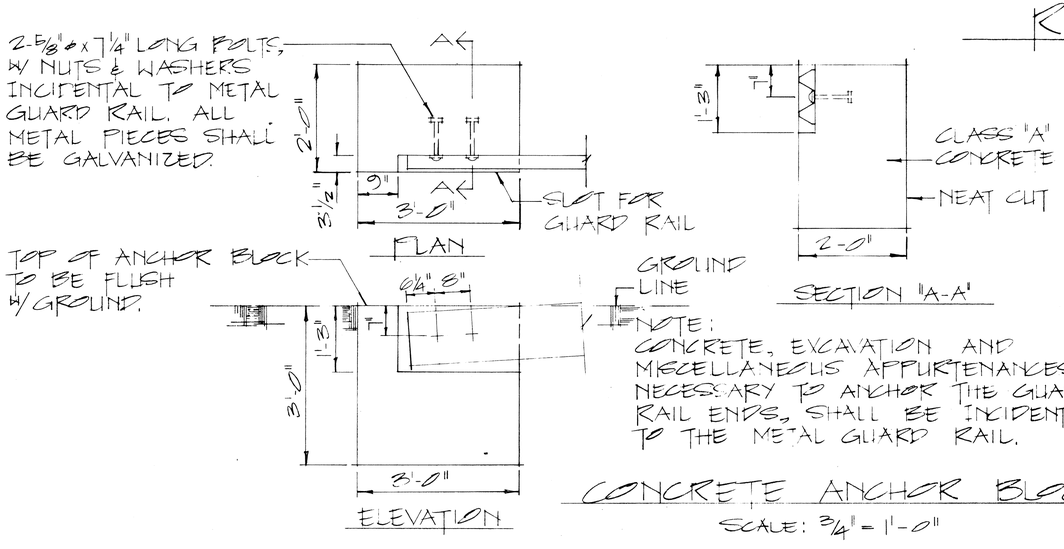

NOTE:
CONCRETE, EXCAVATION AND MISCELLANEOUS APPURTENANCES NECESSARY TO ANCHOR THE GUARD RAIL ENDS, SHALL BE INCIDENTAL TO THE METAL GUARD RAIL.

CONCRETE ANCHOR BLOCK

SCALE: 3/4" = 1'-0"

APPROVAL RECOMMENDED:
Eneki Tanaka — 12/23/69
TRAFFIC ENGINEER — DATE

APPROVED:
[signature] — 12-30-69
ASSISTANT CHIEF, ENGINEERING — DATE

NO.	REVISION	APPROVED BY	DATE

STATE OF HAWAII
DEPARTMENT OF TRANSPORTATION
HIGHWAYS DIVISION

STANDARD DETAILS

GUARD RAIL, TYPE 3
RAMP END ANCHORAGE

SCALE: AS SHOWN DATE: OCT. 30, 1970

SHEET No. 188 OF 25 SHEETS | DT512

ORIGINAL PLAN	SURVEY PLOTTED BY	DATE
	DRAWN BY	
	TRACED BY	
NOTE BOOK	DESIGNED BY	
	QUANTITIES BY	
No.	CHECKED BY	

K+E CRYSTALANE® LA 2920 TRACING PAPER

44 44

FED. ROAD DIST. NO.	STATE	FED. AID PROJ. NO.	FISCAL YEAR	SHEET NO.	TOTAL SHEETS
HAWAII	HAW.	I-H1-1(89):13	1971	45	362

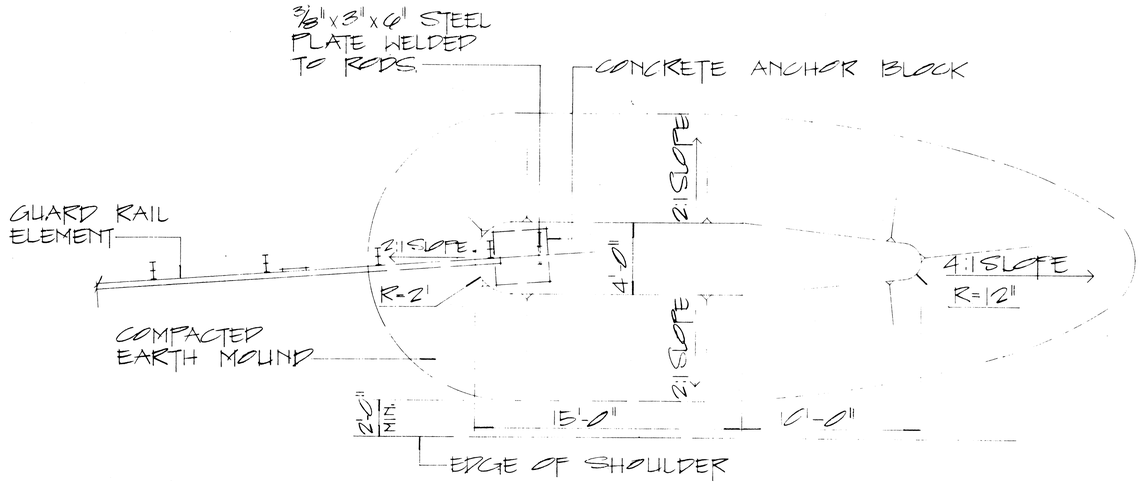

PLAN

EARTH MOUND DETAIL (SINGLE GUARD RAIL)

SCALE: 1/4" = 1'-0"

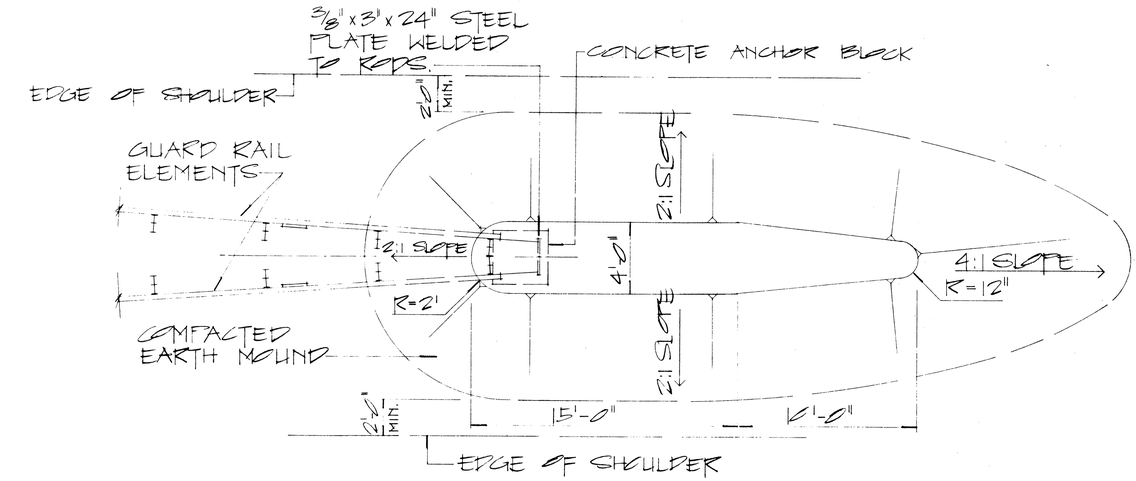

PLAN

EARTH MOUND DETAIL (DOUBLE GUARD RAIL)

SCALE: 1/4" = 1'-0"

*NOTE: 2'-0" WHEN INSTALLED WITH RUB RAIL.

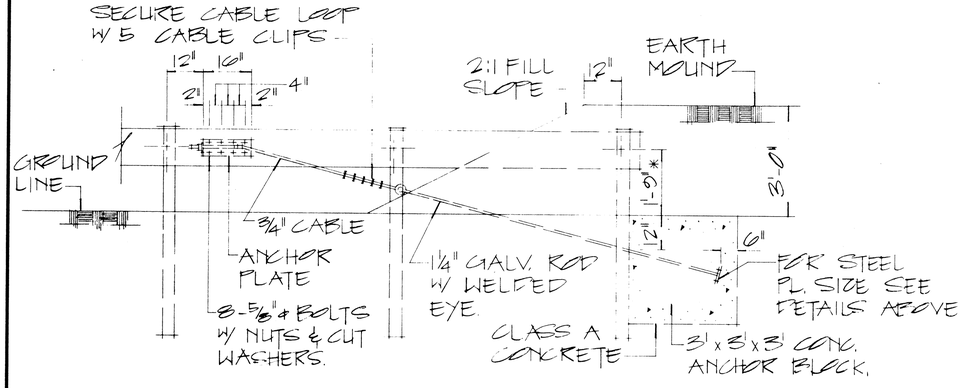

ANCHOR BLOCK DETAIL IN EARTH MOUND

SCALE: 1/2" = 1'-0"

NOTE:

1. GALVANIZED ANCHOR ROD, METAL GUARD RAIL AND POST BURIED IN GROUND SHALL BE COVERED WITH a Min. 20-Mil Thickness of Coal TAR ENAMEL. Conforming to AWWA Standard: C 203
2. CONCRETE, GRP., EXCAVATION, EARTH MOUND, ANCHOR RODS AND MISCELLANEOUS APPURTENANCES NECESSARY TO ANCHOR THE GUARD RAIL ENDS SHALL BE INCIDENTAL TO THE METAL GUARD RAIL.

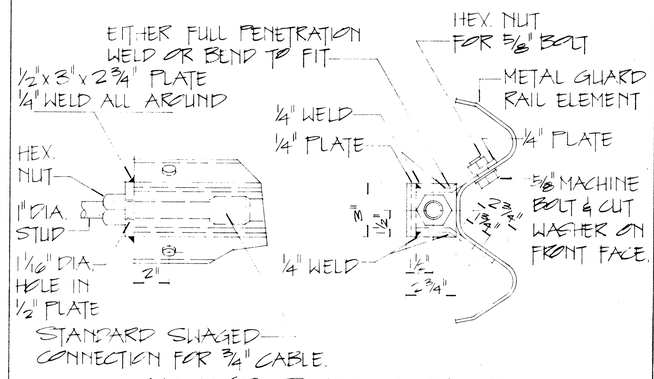

ANCHER PLATE DETAILS

SCALE 1" = 3"

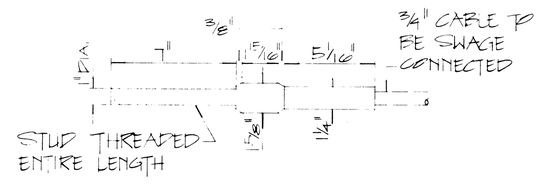

STANDARD SWAGED FITTING AND STUD

SCALE: 1" = 3"

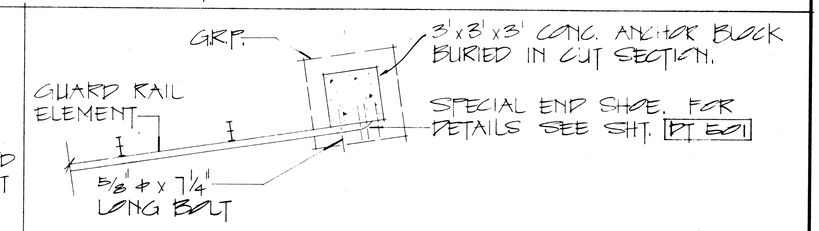

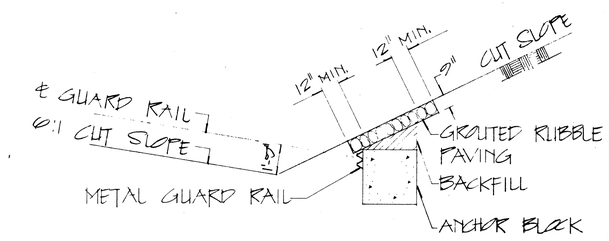

ANCHOR BLOCK IN CUT SECTION

SCALE: 1/4" = 1'-0"

APPROVAL RECOMMENDED:

Eiichi Yanaka — 12/29/69

TRAFFIC ENGINEER — DATE

APPROVED:

[illegible] — 12-30-69

ASSISTANT CHIEF, ENGINEERING — DATE

NO.	REVISION	APPROVED BY	DATE

STATE OF HAWAII
DEPARTMENT OF TRANSPORTATION
HIGHWAYS DIVISION

STANDARD DETAILS

EARTH MOUND AND ANCHOR BLOCK DETAILS

SCALE: AS SHOWN — OCT 1969

SHEET No. 19B OF 25 SHEETS — PT 520

ORIGINAL PLAN	SURVEY PLOTTED BY	DATE
	DRAWN BY	
	TRACED BY	
	DESIGNED BY	
NOTE BOOK	QUANTITIES BY	
No.	CHECKED BY	

K+E CRYSTALENE® LA 2920 TRACING PAPER

FED. ROAD DIST. NO.	STATE	FED. AID PROJ. NO.	FISCAL YEAR	SHEET NO.	TOTAL SHEETS
HAWAII	HAW.	I-H1-1(89):13	1971	46	362

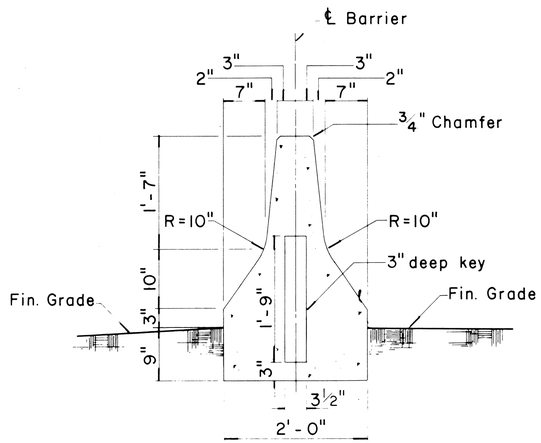

TYPE 4A

Scale: 1" = 1'-0"

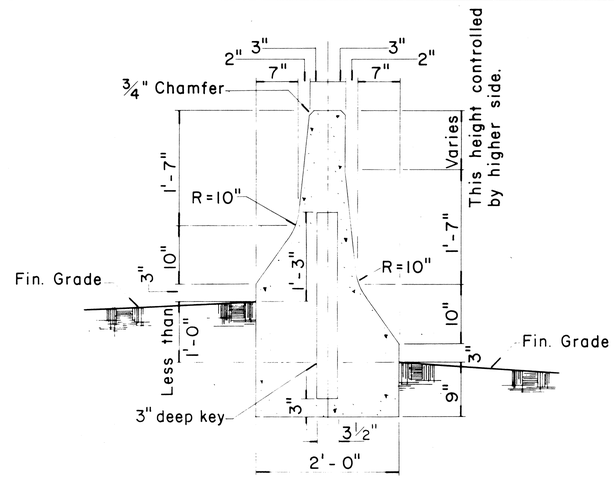

TYPE 4B

Scale: 1" = 1'-0"

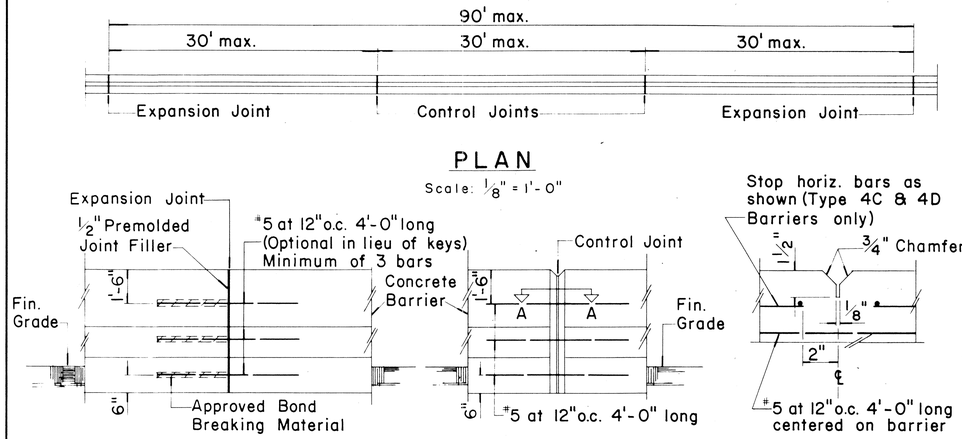

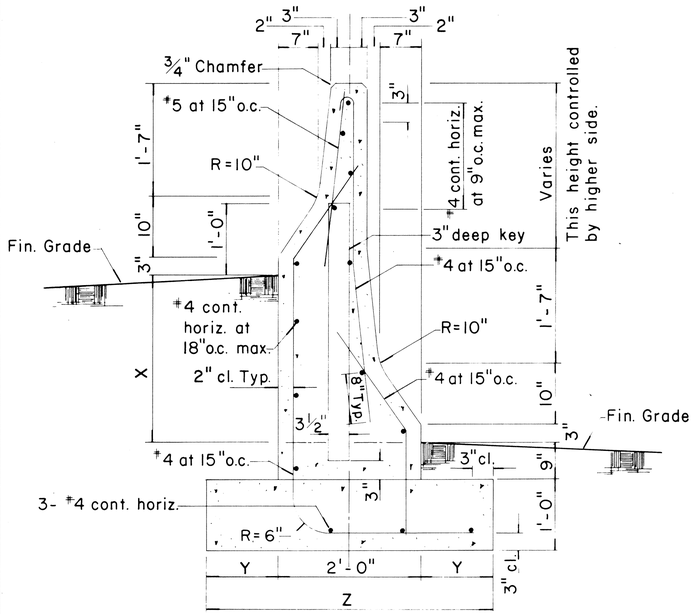

TYPE 4C & TYPE 4D

Scale: 1" = 1'-0"

TYPE	DIFFERENCE IN FIN. GRADE	FOOTING	
	X	Y	Z
4C	1'-0" min., 2'-4" max.	1'-0"	4'-0"
4D	Greater than 2'-4", 4'-4" max.	1'-3"	4'-6"

NOTE:

Except where noted all dimensions shall be the same for Type 4C and Type 4D.

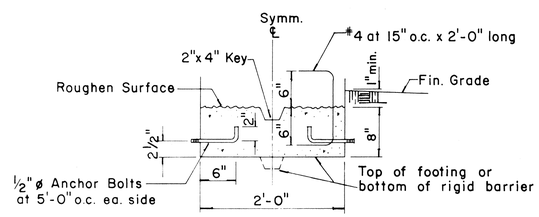

OPTIONAL CONSTRUCTION JOINT DETAILS

Scale: 1" = 1'-0"

NOTE:

The intent of the optional construction joint details for the Type 4 Rigid Barrier Guard Rail is to provide a method of securing the forms and preventing uplift so that the barrier will have a uniform and presentable appearance.
The contractor may submit an alternate method of constructing the barrier for the approval of the Engineer and for use on a trial basis. Any unsatisfactory work shall be removed or corrected as directed by the Engineer and at the Contractor's expense.

GENERAL NOTES

1. Precast Rigid Barrier Guard Rail may be installed as an option to cast-in-place Type 4 Rigid Barrier Guard Rail. Contractor shall submit shop drawings to Engineer for approval.

2. Expansion Joints shall be constructed at ninety-foot (90 ft.) maximum intervals and at existing expansion joints of structures. (Use ½" premolded joint filler, incidental to Type 4 Rigid Barrier Guard Rail). Control Joints shall be placed between expansion joints at 30' maximum. Shear keys shall be required at all construction joints.
3. The exterior surface and vertical alignment of the Type 4 Rigid Barrier Guard Rail shall be constructed to give a uniform and presentable appearance. Variation of more than ¼" in 20' max. and ½" in 40' or more will be considered objectionable. The Engineer shall determine the acceptability of the work.
During the course of the work, samples may be tested and measurements made to establish whether or not the specified values or dimensions are being met. If the specified values or dimensions are not being met, the Engineer shall determine the degree of the non-conformance, the effect on the serviceability of the project, whether the work be accepted and remain in place and, if so, the amount to be paid for such work, or whether the work shall be removed and replaced or otherwise corrected at the Contractor's expense.

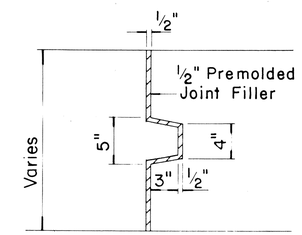

SECTION THRU KEY AT EXPANSION JOINT

Scale: 1½" = 1'-0"

STATE OF HAWAII
DEPARTMENT OF TRANSPORTATION
HIGHWAYS DIVISION

GUARD RAIL TYPE 4 (RIGID BARRIER)

Scale: As Shown Oct. 1969

SHEET No. 20B OF 25 SHEETS

ORIGINAL PLANS	SURVEY PLOTTED BY	DATE
	DRAWN BY	"
	TRACED BY	"
	DESIGNED BY	"
NOTE BOOK	QUANTITIES BY	"
	CHECKED BY	"
No.		

46 G

FED. ROAD DIST. NO.	STATE	FED. AID PROJ. NO.	FISCAL YEAR	SHEET NO.	TOTAL SHEETS
HAWAII	HAWAII	IHI-1(89):13	1971	47	362

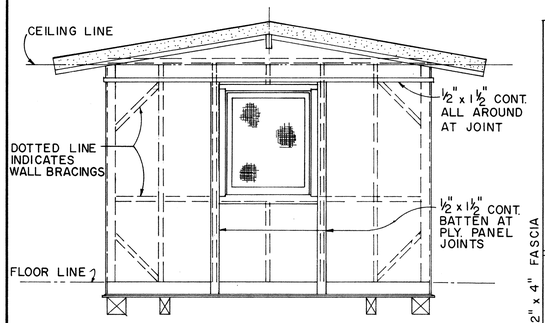

ELEVATION (B)
ELEVATION (D) SIMILAR
SCALE: 3/8" = 1'-0"

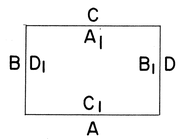

EXTERIOR & INTERIOR KEY

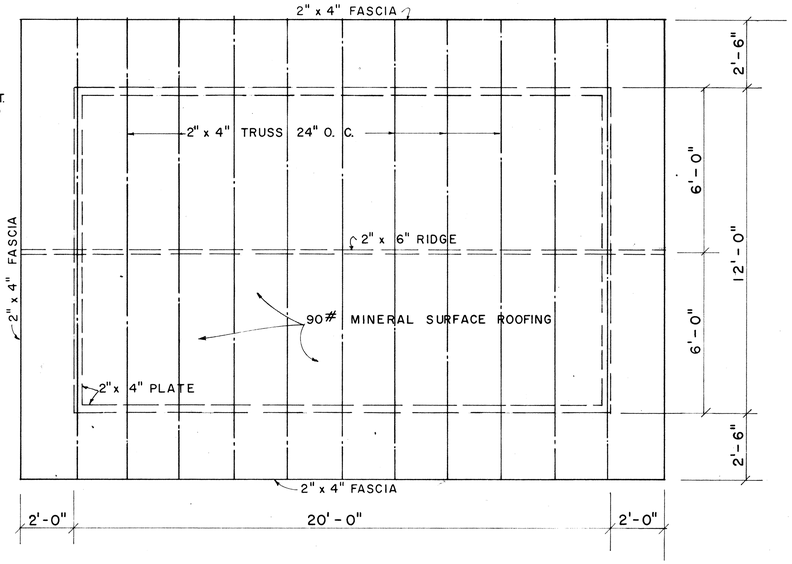

ROOF FRAMING PLAN
SCALE: 3/8" = 1'-0"

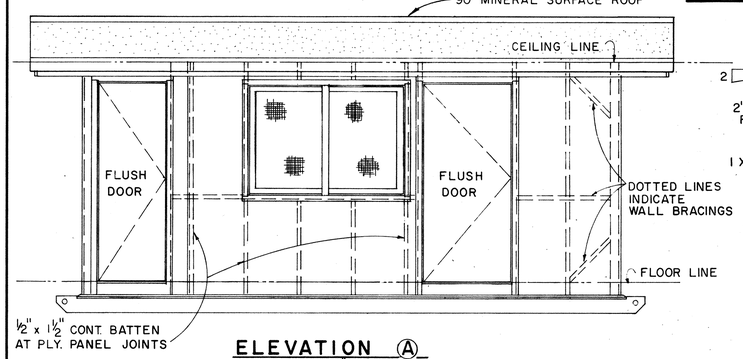

ELEVATION (A)
SCALE: 3/8" = 1'-0"

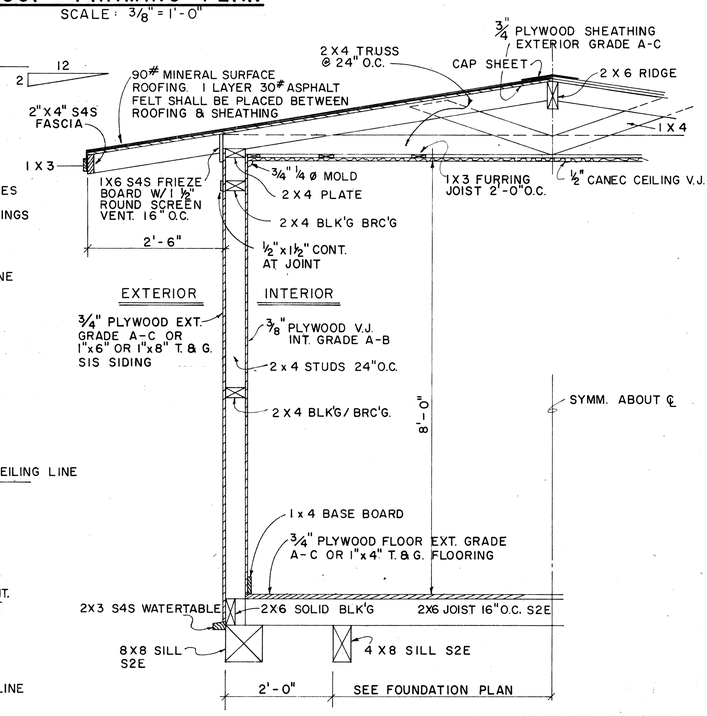

TYPICAL WALL SECTION
SCALE: 3/4" = 1'-0"

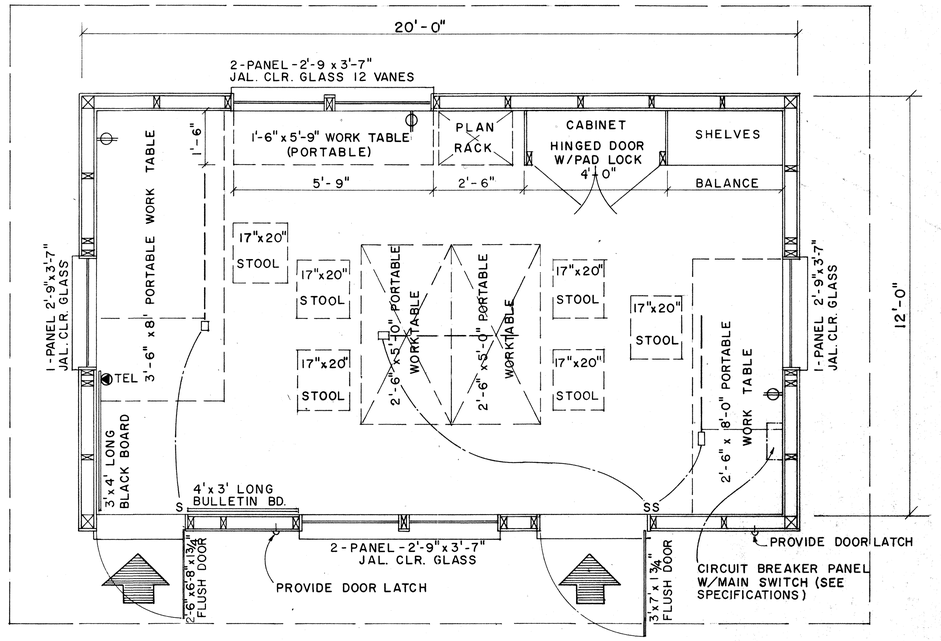

FLOOR PLAN
SCALE: 1/2" = 1'-0"

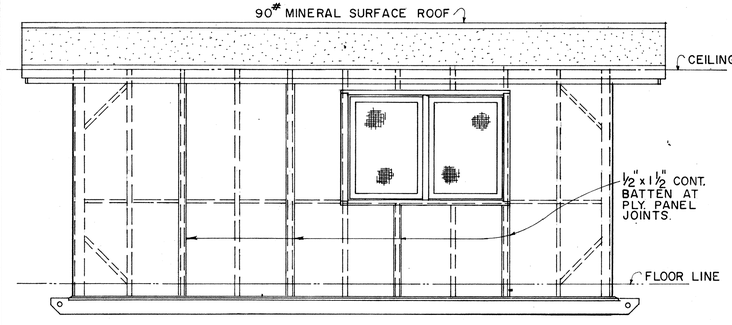

ELEVATION (C)
SCALE: 3/8" = 1'-0"

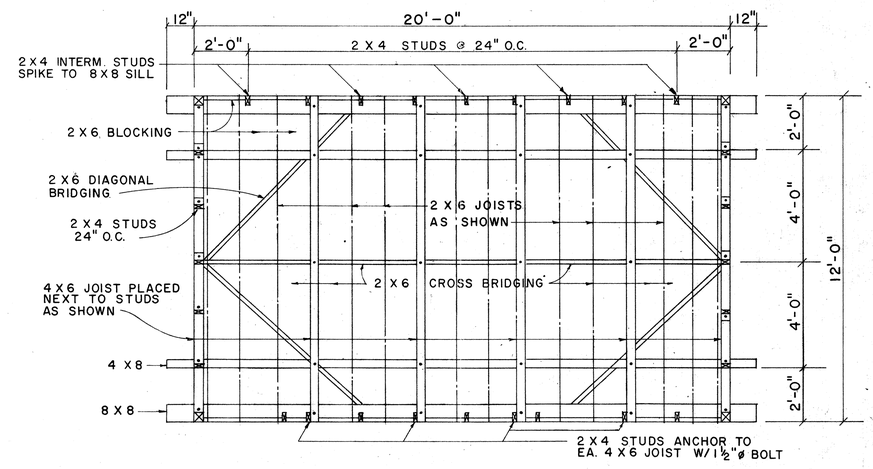

FOUNDATION FRAMING PLAN
SCALE: 3/8" = 1'-0"

APPROVAL RECOMMENDED:
M. Hirozawa — HIGHWAY DESIGN ENGINEER — 12-4-69 DATE

APPROVED:
Andrew O. Bodden — ASSISTANT CHIEF, ENGINEERING — 12-10-69 DATE

NO.	REVISION	APPROVED BY	DATE

STATE OF HAWAII
DEPARTMENT OF TRANSPORTATION

FIELD OFFICE

Scale: As Noted — Date: Oct. 30, 1970

SHEET No. 21B OF 25 SHEETS — DD 636.1

ORIGINAL PLAN	SURVEY PLOTTED BY	DATE
	DRAWN BY	
	TRACED BY	
	DESIGNED BY	
NOTE BOOK	QUANTITIES BY	
No.	CHECKED BY	

FED. ROAD DIST. NO.	STATE	FED. AID PROJ. NO.	FISCAL YEAR	SHEET NO.	TOTAL SHEETS
HAWAII	HAWAII	F-111-1(89):13	1971	48	362

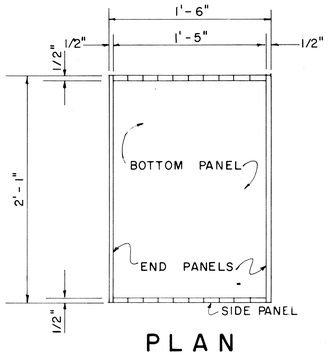

PLAN

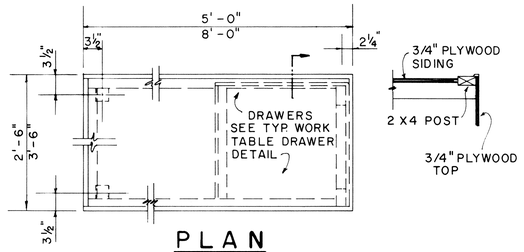

PLAN

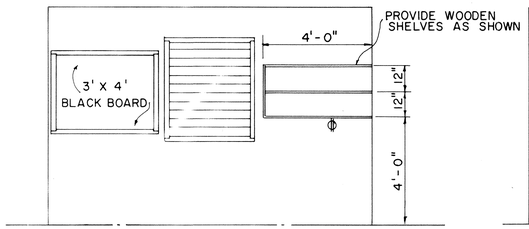

ELEVATION (D1)

SCALE: 3/8" = 1'-0"

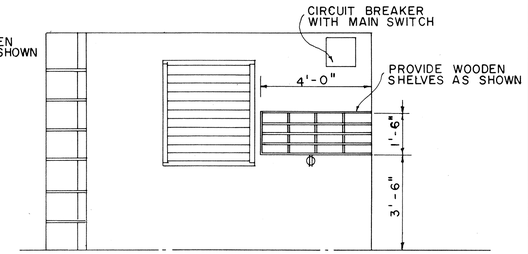

ELEVATION (B1)

SCALE: 3/8" = 1'-0"

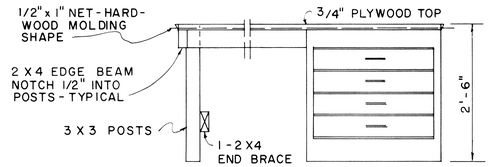

ELEVATION

2'-6" x 5'-0" 2 REQ'D.
3'-6" x 8'-0" 1 REQ'D
2'-6" x 8'-0" 1 REQ'D

PORTABLE WORK TABLE DETAIL

SCALE: 3/4" = 1'-0"

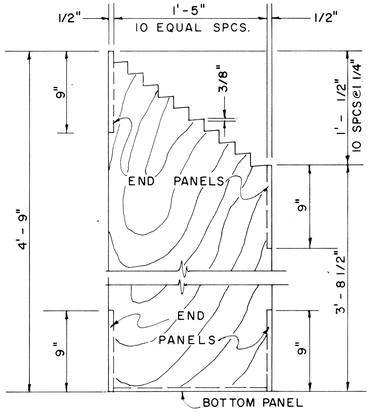

END ELEVATION

PLAN RACK DETAIL

SCALE: 1 1/2" = 1'-0"

(ONE REQUIRED)

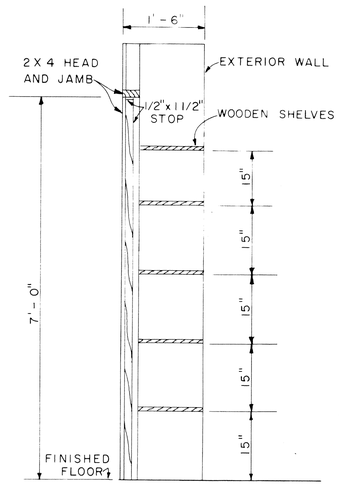

SECTION (G)

SCALE: 3/4" = 1'-0"

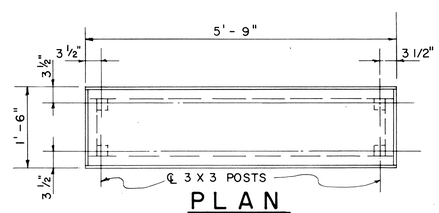

PLAN

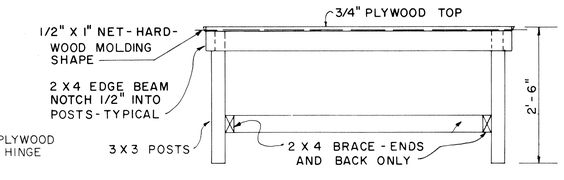

ELEVATION

1'-6" x 5'-9" PORTABLE WORK TABLE DETAIL

SCALE: 3/4" = 1'-0"

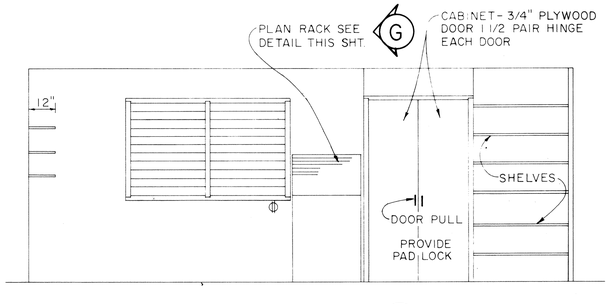

ELEVATION (A1)

SCALE: 3/8" = 1'-0"

APPROVAL RECOMMENDED:

M. Hiozumi — HIGHWAY DESIGN ENGINEER — 12-4-69 DATE

APPROVED:

Walter S. Zadoiski — ASSISTANT CHIEF, ENGINEERING — 12-10-69 DATE

NO.	REVISION	APPROVED BY	DATE

STATE OF HAWAII
DEPARTMENT OF TRANSPORTATION
HIGHWAYS DIVISION

FIELD OFFICE

Scale: As Noted Date: Oct. 30, 1970

SHEET No. 22B OF 25 SHEETS DD 636.2

ORIGINAL PLAN	SURVEY PLOTTED BY	DATE
	DRAWN BY	"
	TRACED BY	"
NOTE BOOK	DESIGNED BY	"
	QUANTITIES BY	"
No.	CHECKED BY	"

48

FED. ROAD DIST. NO.	STATE	FED. AID PROJ. NO.	FISCAL YEAR	SHEET NO.	TOTAL SHEETS
HAWAII	HAW.	I-H1-1(89):13	1971	49	362

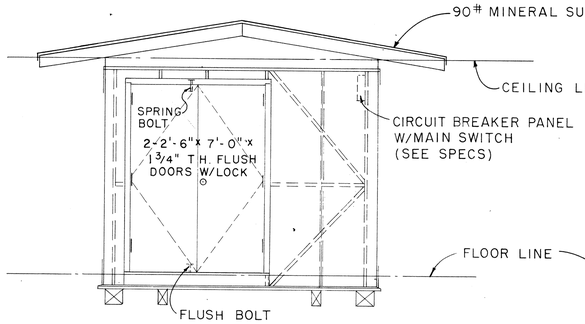

ELEVATION (B)

SCALE: 3/8" = 1'-0"

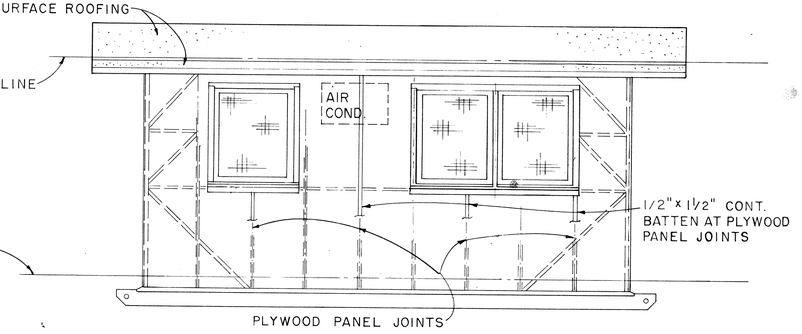

ELEVATION (A)

SCALE: 3/8" = 1'-0"

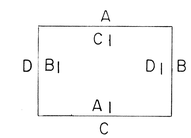

EXTERIOR & INTERIOR KEY

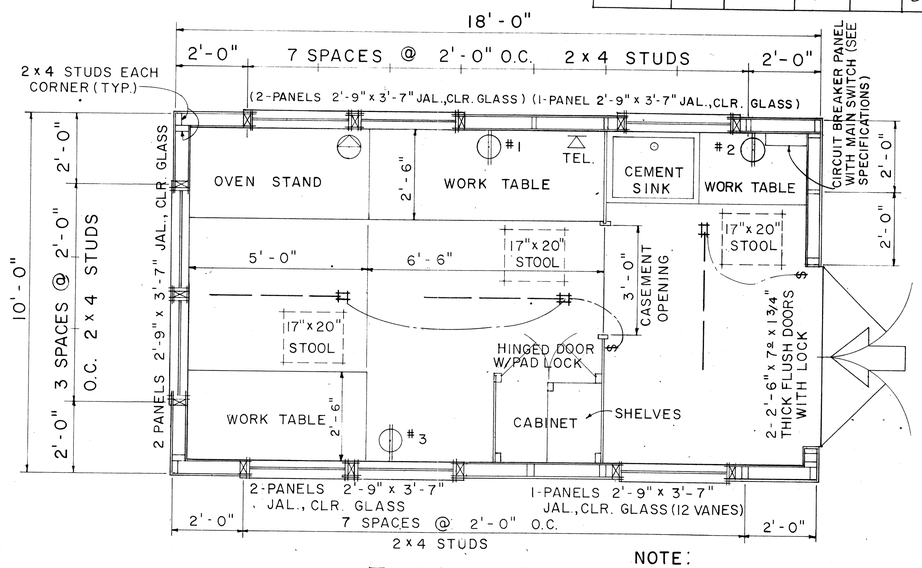

FLOOR PLAN

SCALE: 1/2" = 1'-0"

NOTE:

1. FLUORESCENT FIXTURE SHALL BE 48", 2 LAMP, 40 WATT, RAPID START.
2. TELEPHONE AND WALL OUTLET 4'-0" ABOVE FLOOR.

1-LAYER 30# ASPHALT FELT SHALL BE PLACED BETWEEN ROOFING AND SHEATHING.

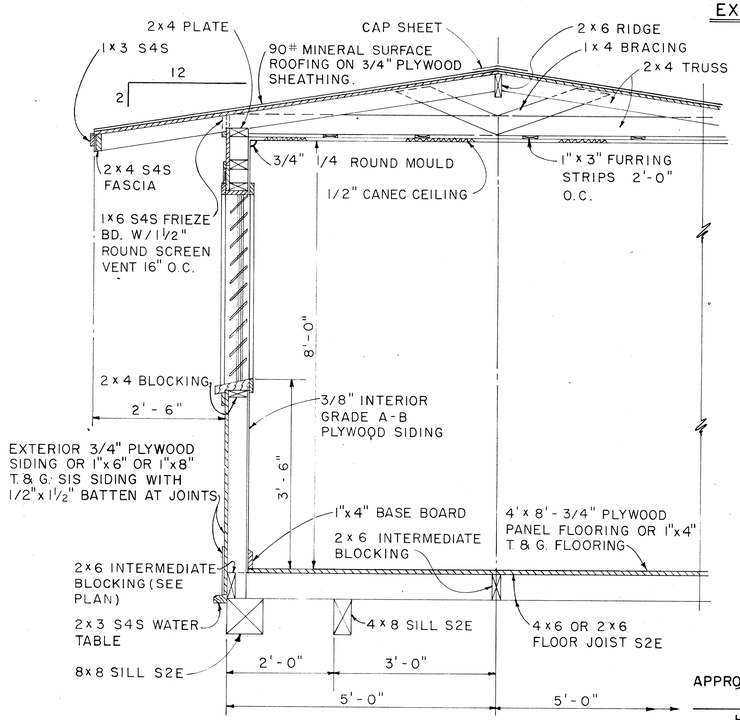

TYPICAL SECTION

SCALE: 3/4" = 1'-0"

NOTE:

ALL 3/4" PLYWOOD SHALL BE EXTERIOR GRADE A-C OR BETTER.

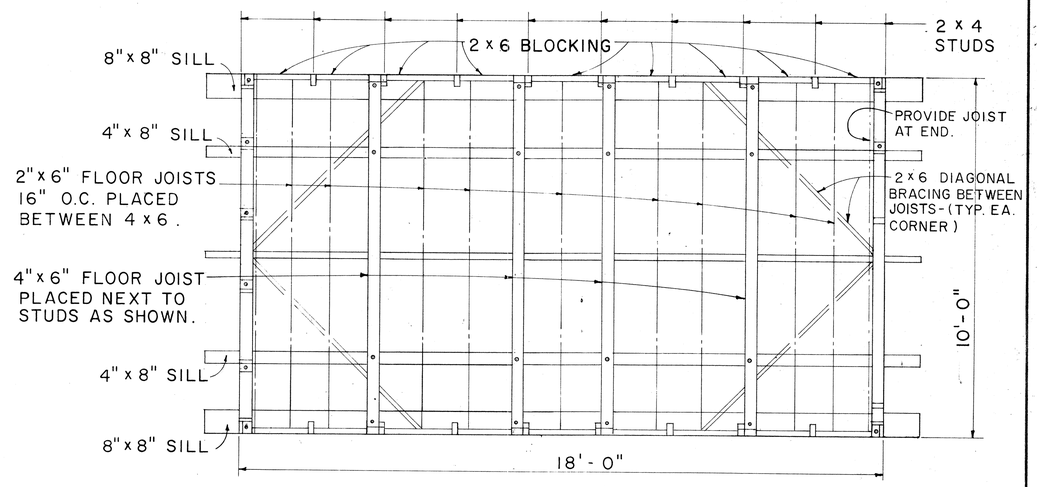

FLOOR FRAMING PLAN

SCALE: 1/2" = 1'-0"

APPROVAL RECOMMENDED:

M. Hirozawa — HIGHWAY DESIGN ENGINEER — 12-4-69 DATE

APPROVED:

Walter S. Baldwin — ASSISTANT CHIEF, ENGINEERING — 12-10-69 DATE

NO.	REVISION	APPROVED BY	DATE

STATE OF HAWAII
DEPARTMENT OF TRANSPORTATION
HIGHWAYS DIVISION

PROJECT SITE LABORATORY

Scale: As Noted — Date: Oct. 30, 1970

ORIGINAL PLAN	SURVEY PLOTTED BY	DATE
	DRAWN BY	"
	TRACED BY	"
NOTE BOOK	DESIGNED BY	"
	QUANTITIES BY	"
No.	CHECKED BY	"

SHEET No. 23B OF 25 SHEETS — DD 636.3

49

FED. ROAD DIST. NO.	STATE	FED. AID PROJ. NO.	FISCAL YEAR	SHEET NO.	TOTAL SHEETS
HAWAII	HAW.	I-H1-1(89):13	1971	50	362

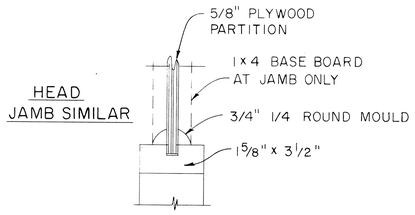

CASEMENT DETAIL

SCALE: 3" = 1'-0"

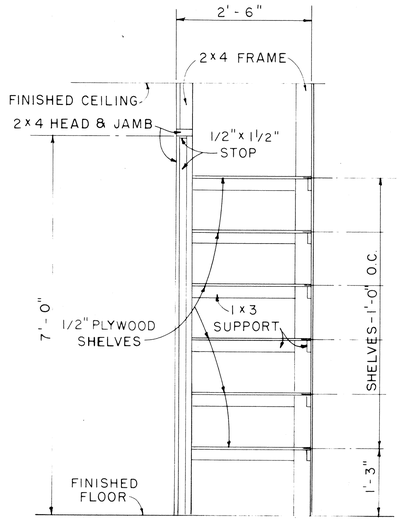

CABINET DETAIL

SCALE: 3/4" = 1'-0"

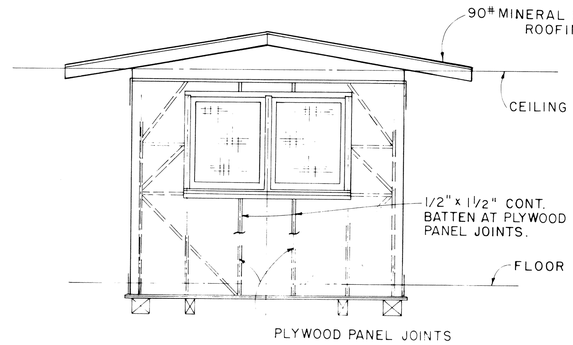

ELEVATION (D)

SCALE: 3/8" = 1'-0"

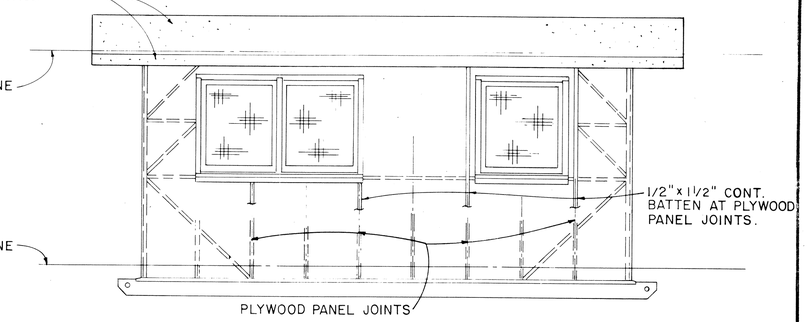

ELEVATION (C)

SCALE: 3/8" = 1'-0"

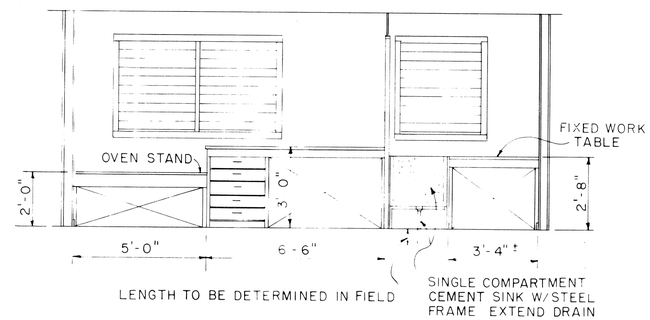

ELEVATION (C1)

SCALE: 3/8" = 1'-0"

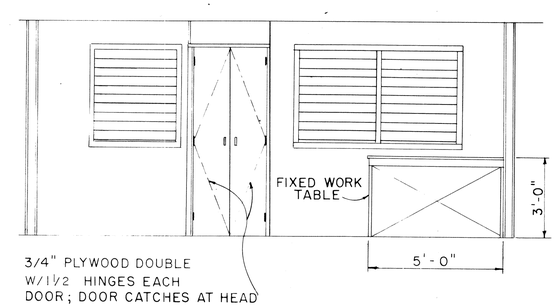

ELEVATION (A1)

SCALE: 3/8" = 1'-0"

APPROVAL RECOMMENDED:

HIGHWAY DESIGN ENGINEER — DATE: 12-4-69

APPROVED:

ASSISTANT CHIEF, ENGINEERING — DATE: 12-10-69

NO.	REVISION	APPROVED BY	DATE

STATE OF HAWAII
DEPARTMENT OF TRANSPORTATION
HIGHWAYS DIVISION

PROJECT SITE LABORATORY

Scale: As Noted — Date: Oct. 30, 1970

SHEET No. 24B OF 25 SHEETS | DD 636.4

ORIGINAL PLAN	SURVEY PLOTTED BY	DATE
	DRAWN BY	"
NOTE BOOK	TRACED BY	"
	DESIGNED BY	"
No.	QUANTITIES BY	"
	CHECKED BY	"

50 (1)

FED. ROAD DIST. NO.	STATE	FED. AID PROJ. NO.	FISCAL YEAR	SHEET NO.	TOTAL SHEETS
HAWAII	HAWAII	F-HI-1(89):13	1971	51	362

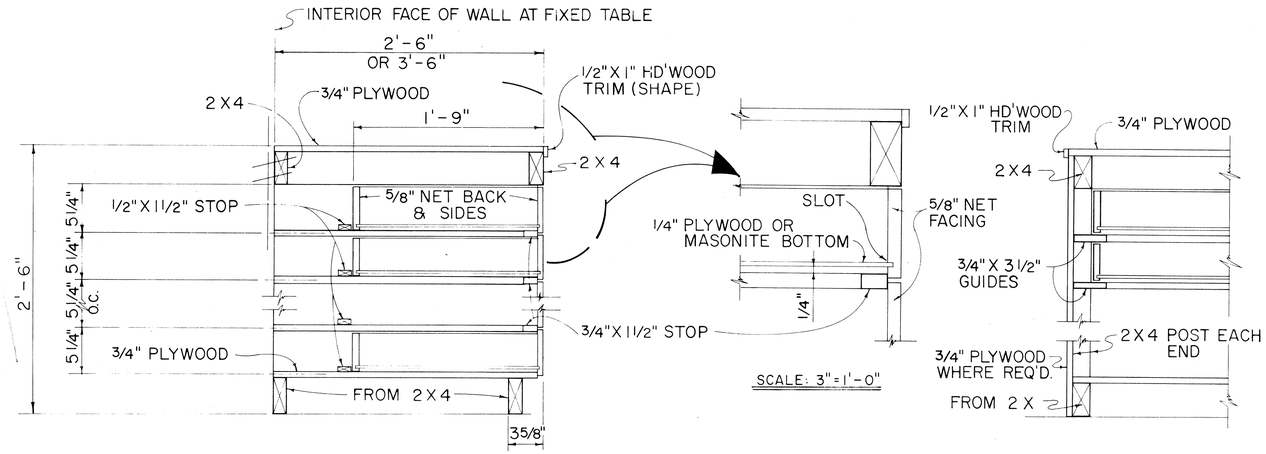

CROSS SECTION
SCALE: 1 1/2"=1'-0"

END SECTION
SCALE: 1 1/2"=1'-0"

TYPICAL WORK TABLE DRAWER DETAIL

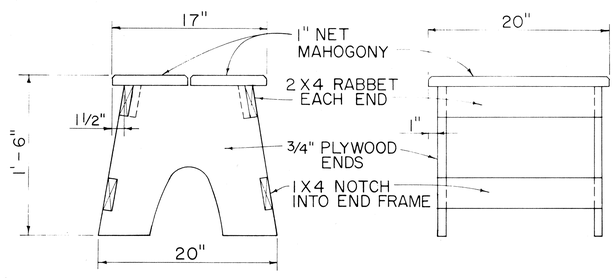

TYPICAL STOOL DETAIL

SCALE: 1 1/2"=1'-0"

NOTE: CONTRACTOR MAY WITH THE APPROVAL OF THE ENGINEER FURNISH THE FIELD OFFICE OR PROJECT SITE LABORATORY WITH STOOLS OTHER THAN THE TYPE SHOWN IN THE DETAIL.

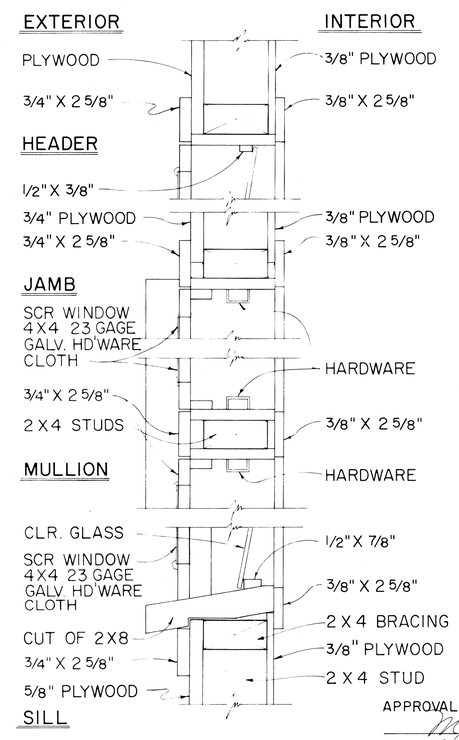

TYPICAL DETAIL JALOUSIES WINDOWS

SCALE: 3"=1'-0"

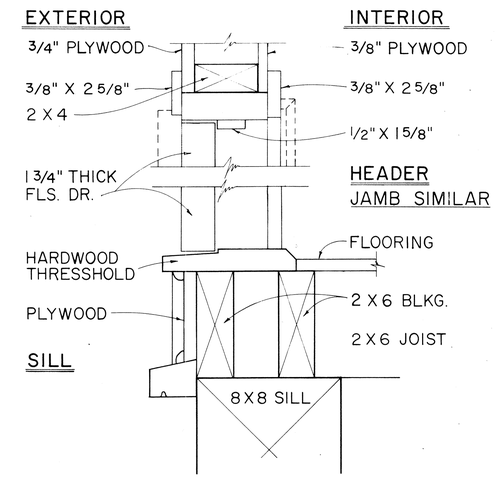

TYP. SWING OUT DOOR

TYPICAL SINGLE OR DOUBLE EXTERIOR DOOR DETAIL

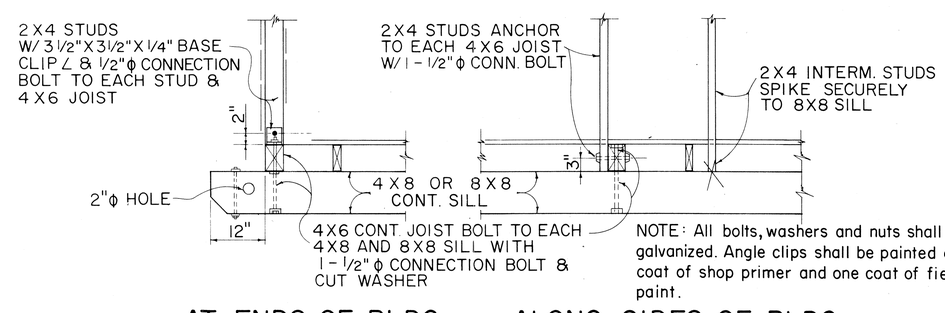

NOTE: All bolts, washers and nuts shall be galvanized. Angle clips shall be painted one coat of shop primer and one coat of field paint.

AT ENDS OF BLDG. ALONG SIDES OF BLDG.

TYPICAL 2X4 STUD & 4X6 FLOOR JOIST BASE CONNECTION DETAILS

APPROVAL RECOMMENDED:
M. Hagiwara — 12-4-69
HIGHWAY DESIGN ENGINEER — DATE

APPROVED:
[signature] — 12-10-69
ASSISTANT CHIEF, ENGINEERING — DATE

NO.	REVISION	APPROVED BY	DATE

STATE OF HAWAII
DEPARTMENT OF TRANSPORTATION
HIGHWAYS DIVISION

FIELD OFFICE
&
PROJECT SITE LABORATORY

Scale: As Noted — Date: Oct. 30, 1970

SHEET No. 25B OF 25 SHEETS — DD 636.5

51