FED. ROAD DIST. NO.	STATE	FED. AID PROJ. NO.	FISCAL YEAR	SHEET NO.	TOTAL SHEETS
HAWAII	HAW.	F-078-1(7)	1971	C.O. ADD.129	302

Revised: July 20, 1971
△1 Sept. 30, 1971
△2 July 14, 1972

TRUE NORTH
Scale: 1" = 20'

LEGEND AND SPRINKLER HEAD SPECIFICATIONS

SYMBOL	NUMBER	TYPE	P.S.I.	RADIUS	G.P.M	RISER
◆	J - 20	Jet Sprinkler Part Circle 1/8" Nozzle w/Deflector	35	20'	2.8	1/2" I.P.S.
◆	J - 30	Jet Sprinkler Part Circle 9/64" Nozzle	35	30'	3.6	1/2" I.P.S.
◆	J - 40	Jet Sprinkler Part Circle 5/32" Nozzle	40	30'	4.6	1/2" I.P.S.
▽	J - 50	Jet Sprinkler Part Circle 3/16" Nozzle	50	47'	7.2	3/4" I.P.S.
⊗		△1 Remote Control Valve "Type "A" Valve Box				
⊙		Atmospheric Vacuum Breaker				
⊠		Water Meter (Furnished & Installed by B.W.S)				
⋈		Valve and Valve Box				
●	S-10 F	Shrubbery Sprinkler, Full Circle	20	10'	3.2	1/2" I.P.S.
◠	S-10 H	Shrubbery Sprinkler, Half Circle	20	10'	2.5	1/2" I.P.S.
⊥		Nozzle, 5/16" x 24 N.F Male Thread	15	4'	0.3	
◒	S-15 F	Shrubbery Sprinkler, Full Circle, Stream Spray type	20	14'	1.7	1/2" I.P.S

NOTES:
1. "Pressure" is the minimum pressure in pounds per square inch, which is available at the base of the last head. The operating pressure of acceptable heads must not exceed this value when operating at the tabulated flow and radius.
2. "Radius of Coverage" is the minimum radius at the tabulated pressure.
3. "Flow" is the maximum flow, in gallons per minute, which is discharged at the tabulated pressure.
4. Jet sprinkler shall be brass construction, except for springs and washers. Nozzles shall be brass. Corrosion resistant Stainless Steel construction will be acceptable & preferred over brass construction.
5. Remote Control Valves shall operate at the following minimum discharge for the size indicated.

Size	1	1 1/4	1 1/2	2	2 1/2
G.P.M	15	30	40	60	80

GENERAL NOTES: △

1. Final location of Meter, Remote Control Valves and Vacuum Breakers shall be determined by the Engineer.
2. Unless otherwise called for or directed by the Engineer, the center line of the feeder pipe shall be located 3" from the back of curbs or 12" from the fence line or guard rail post or edge of slope.
3. When the consumers water service will be interrupted the Contractor shall notify each consumer and the Board of Water Supply concerning the time and the duration of the shut-down.
4. See Sht. No. 177 for Water General Notes.
5. △1 For all pipes 3" or larger provide concrete reaction blocks at all bends and tees.
6. △1 Minimum cover (top of pipe to finish grade) for 4" pipe shall be 2'-6".

△ ELECTRICAL GENERAL NOTES:

1. Direct burial lines shall be laid parallel with sprinkler feeder line in common trench where possible.
2. PVC conduits under roadway shall have a minimum cover of 2 feet.
7. Sprinkler lines installed above ground shall be galvanized steel pipe.

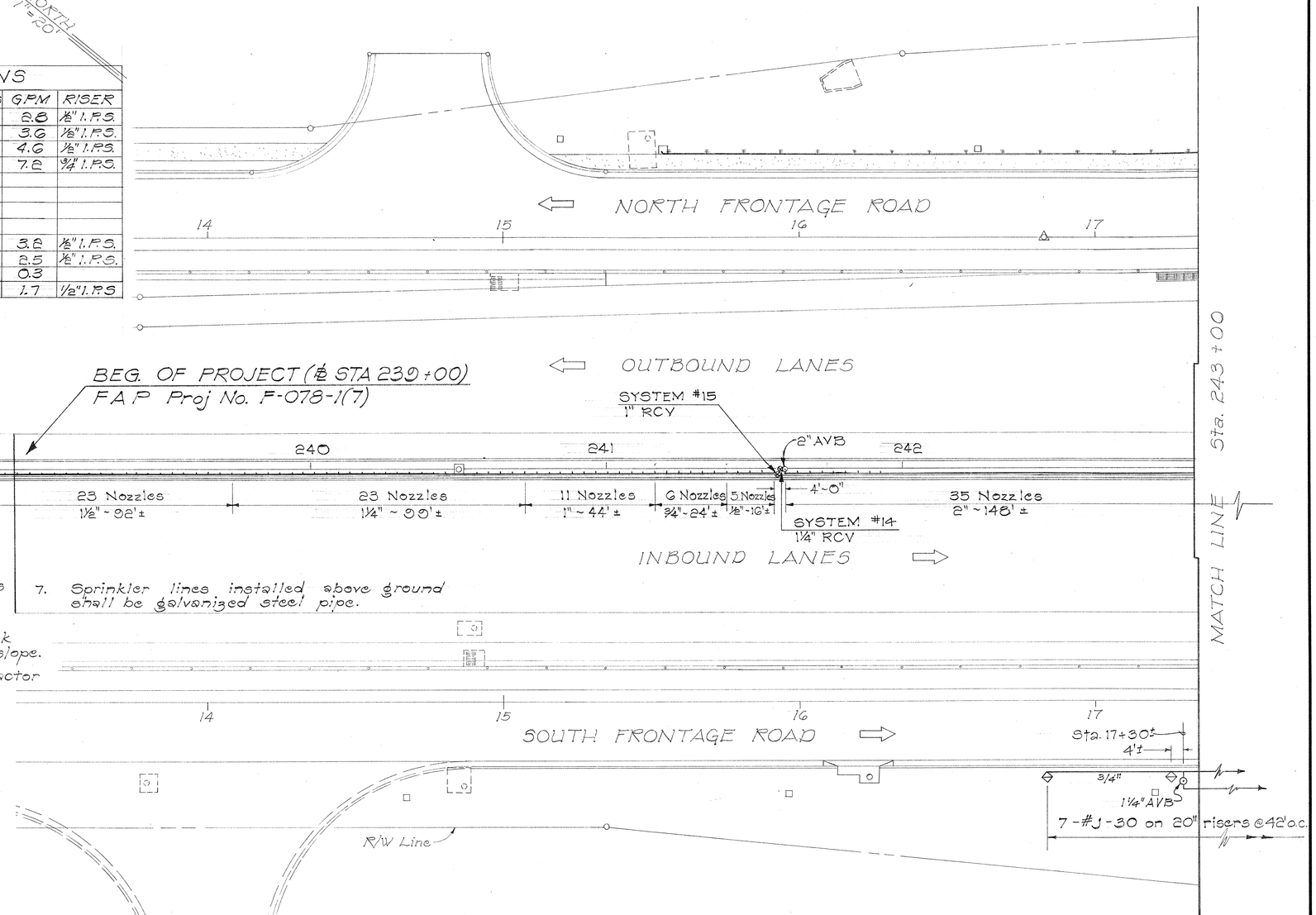

~~NOTE:~~
~~Sheet Nos. 129, 130, 131 and 132 are replaced or supplemented by Sht. Nos. ADD.129, ADD.130, ADD.131, ADD.131 S-1 to ADD.131 S-7 and ADD.132.~~

~~This sht. replaces sht. no. 129~~
~~△1 THIS SHEET SUPERSEDES SHEET NO. ADD. 129~~
~~△2 THIS SHEET SUPERSEDES SHT. NO. C.O. ADD. 129~~

DATE	REVISION
5-21-73	CCO #50 Added S-15F to Legend & Sprinkler Specifications. Add Systems No. 14 & 15. Add Notes to Legend & Sprinkler Specification.

STATE OF HAWAII
DEPARTMENT OF TRANSPORTATION
HIGHWAYS DIVISION

SPRINKLER SYSTEM
(Sta. 239+00 to Sta. 243+00)
MOANALUA ROAD
(Ala Aolani To Puuloa Interchange)
F.A.P. PROJECT NO. F-078-1(7)

Scale: 1" = 20' Date: July, 1971

SHEET No. 1 OF 11 SHEETS

ORIGINAL PLAN | SURVEY PLOTTED BY | DRAWN BY | TRACED BY | DESIGNED BY | QUANTITIES BY | CHECKED BY | DATE | NOTE BOOK | No.

C.O. ADD. 129

FED. ROAD DIST. NO.	STATE	FED. AID PROJ. NO.	FISCAL YEAR	SHEET NO.	TOTAL SHEETS
HAWAII	HAW.	F-078-1(7)	1971	ADD.130	302

Revised: July 20, 1971

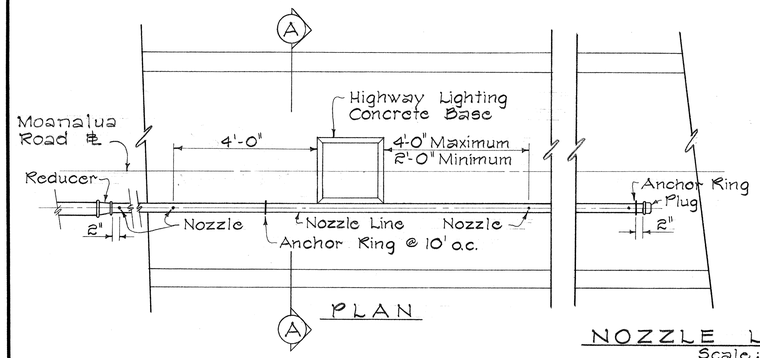

PLAN

NOZZLE LINE LAYOUT
Scale: 1/2" = 1'-0"

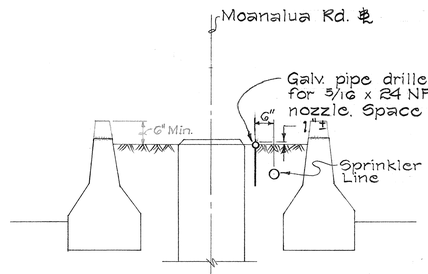

SECTION A-A

ANCHOR RING
Scale: 1" = 1'-0"

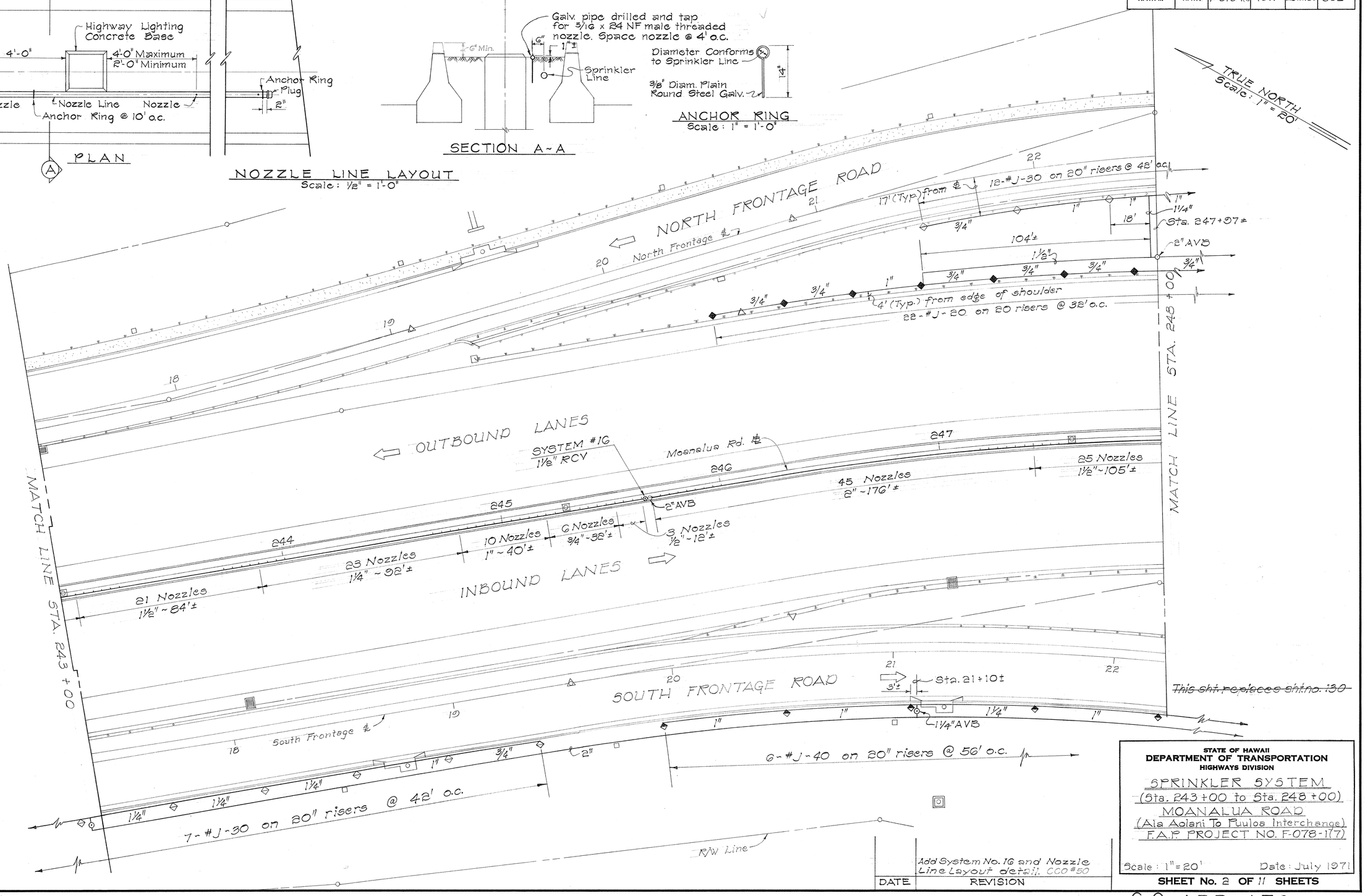

~~This sht. replaces sht. no. 130~~

ORIGINAL PLAN	SURVEY PLOTTED BY	DATE
	DRAWN BY	
	TRACED BY	
	DESIGNED BY	
NOTE BOOK No.	COMPUTED BY	
	CHECKED BY	

DATE	REVISION
	Add System No. 16 and Nozzle Line Layout detail. CCO #50

STATE OF HAWAII
DEPARTMENT OF TRANSPORTATION
HIGHWAYS DIVISION

SPRINKLER SYSTEM
(Sta. 243+00 to Sta. 248+00)
MOANALUA ROAD
(Ala Aolani To Puuloa Interchange)
F.A.P. PROJECT NO. F-078-1(7)

Scale: 1" = 20' Date: July 1971

SHEET No. 2 OF 11 SHEETS

C.O. ADD. 130

K+E CRYSTALEX® TRACING PAPER L.A. 3888

FED. ROAD DIST. NO.	STATE	FED. AID PROJ. NO.	FISCAL YEAR	SHEET NO.	TOTAL SHEETS
HAWAII	HAW.	F-078-1(7)	1971	C.O. ADD.131	302

Revised: July 20, 1971
△1 Sept. 30, 1971
△2 July 14, 1972

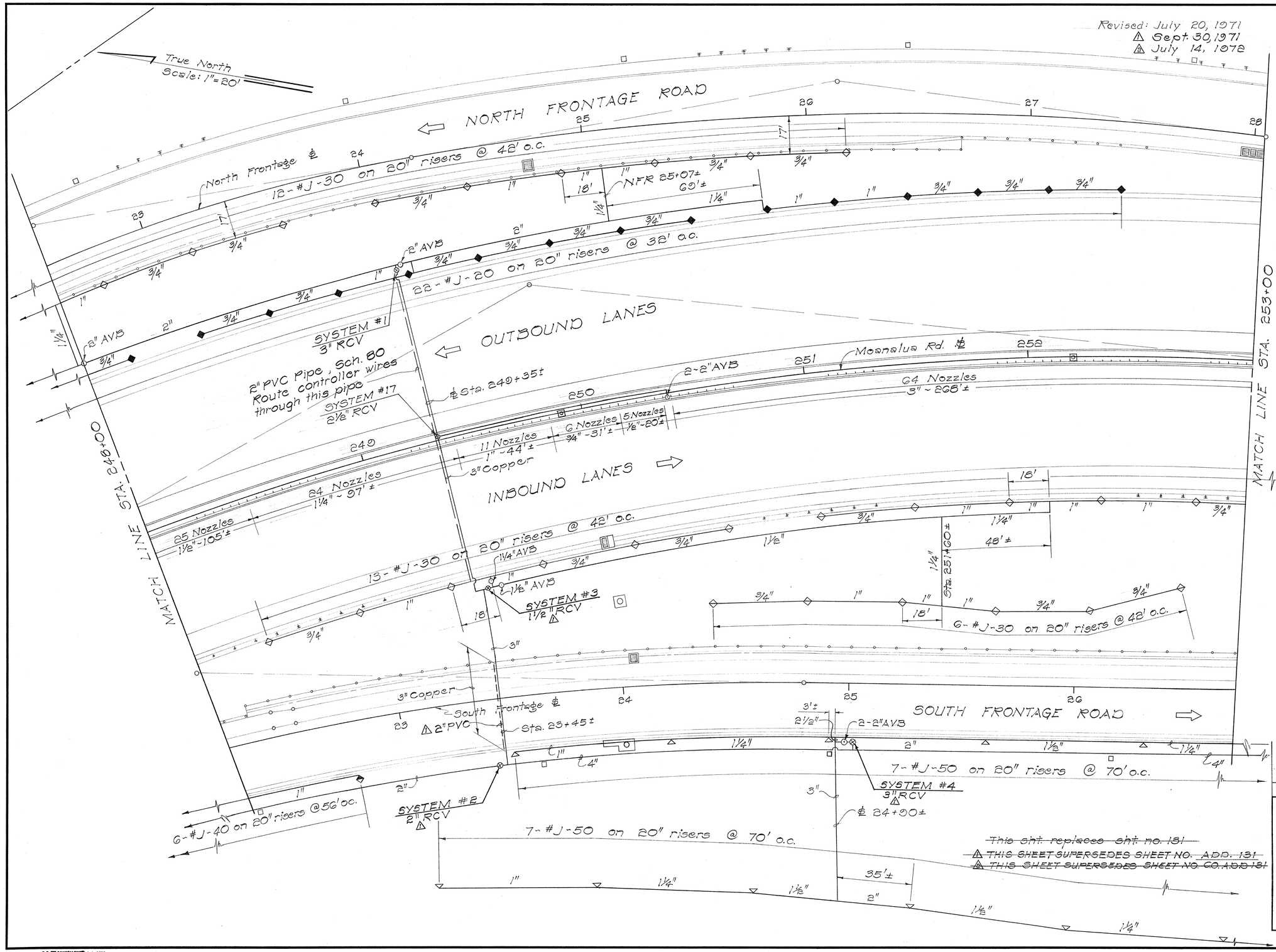

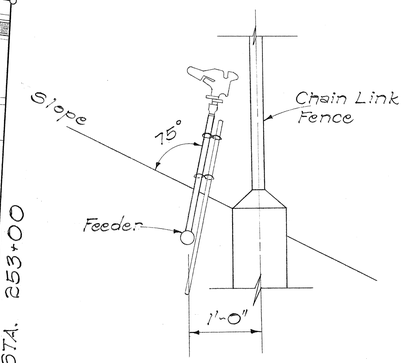

TYPICAL SECTION AT FENCE ALONG NORTH FRONTAGE RD.
Scale: 1" = 1'-0"

~~This sht. replaces sht. no. 131~~
~~△1 THIS SHEET SUPERSEDES SHEET NO. ADD. 131~~
~~△2 THIS SHEET SUPERSEDES SHEET NO. C.O. ADD. 131~~

DATE	REVISION
	Add System No. 17 moved RCV for System No. 1 CCO #50

STATE OF HAWAII
DEPARTMENT OF TRANSPORTATION
HIGHWAYS DIVISION

SPRINKLER SYSTEM
(Sta. 248+00 to Sta. 253+00)
MOANALUA ROAD
(Ala Aolani To Puuloa Interchange)
F.A.P. PROJECT NO. F-078-1(7)

Scale: 1" = 20' Date: July 1971

SHEET No. 3 OF 11 SHEETS

ORIGINAL PLAN	SURVEY PLOTTED BY: DRAWN BY: TRACED BY: DESIGNED BY: QUANTITIES BY: CHECKED BY:	DATE: " " " " " "
NOTE BOOK No.		

K+E CRYSTALENE® TRACING PAPER LA 3363

C.O. ADD. 131

FED. ROAD DIST. NO.	STATE	FED. AID PROJ. NO.	FISCAL YEAR	SHEET NO.	TOTAL SHEETS
HAWAII	HAW.	F-078-1(7)	1971	C.O. ADD. 131 S-1	302

Revised: July 20, 1971
△1 Sept. 30, 1971
△2 July 14, 1972

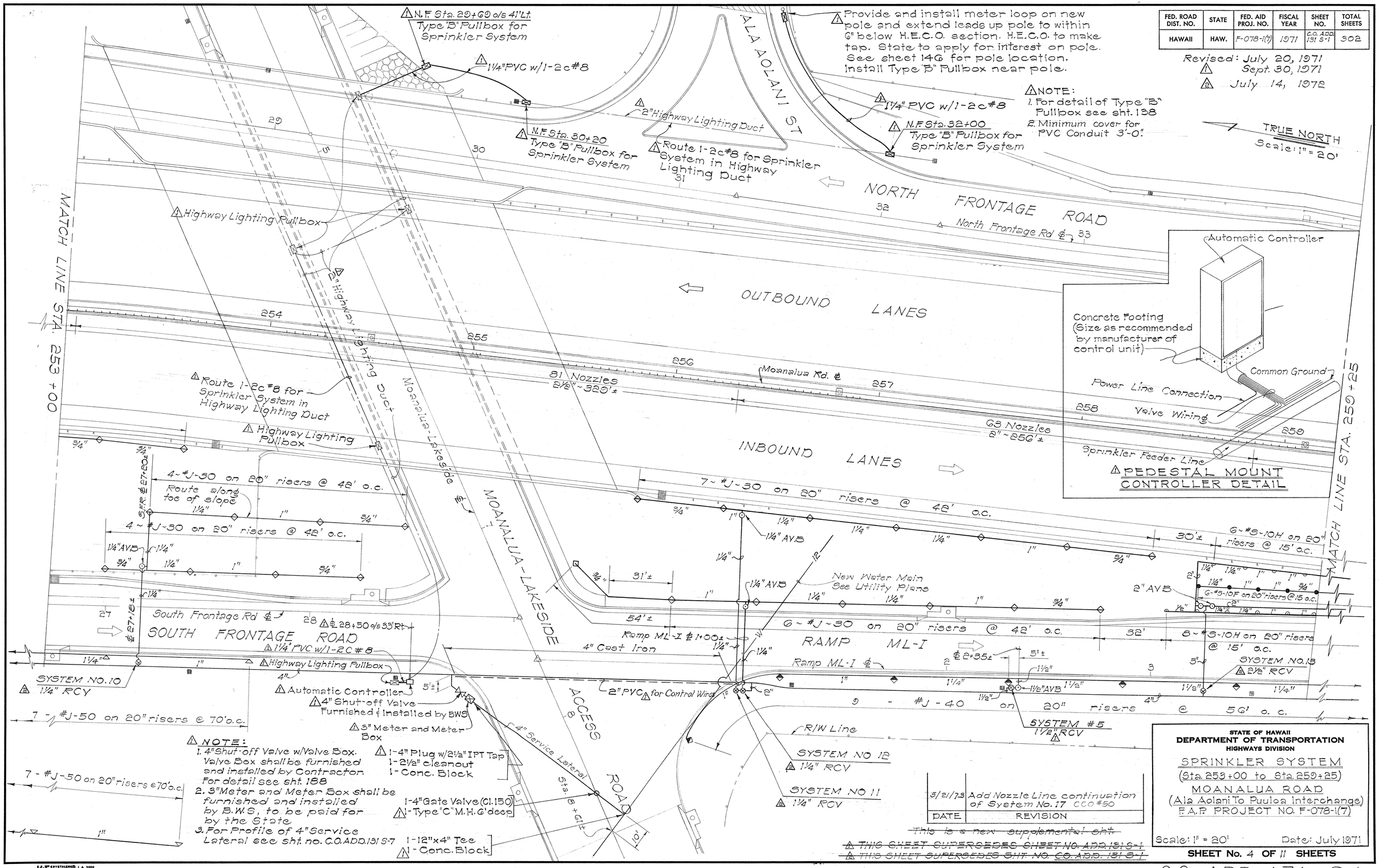

DATE	REVISION
5/21/73	Add Nozzle Line continuation of System No. 17 CCO #50

~~This is a new supplemental sht.~~
~~△1 THIS SHEET SUPERSEDES SHEET NO. ADD. 131 S-1~~
~~△2 THIS SHEET SUPERSEDES SHT. NO. C.O. ADD. 131 S-1~~

STATE OF HAWAII
DEPARTMENT OF TRANSPORTATION
HIGHWAYS DIVISION

SPRINKLER SYSTEM
(Sta. 253+00 to Sta. 259+25)
MOANALUA ROAD
(Ala Aolani To Puuloa Interchange)
F.A.P. PROJECT NO. F-078-1(7)

Scale: 1" = 20' Date: July 1971

SHEET No. 4 OF 11 SHEETS

ORIGINAL PLAN	
SURVEY PLOTTED BY	
DRAWN BY	
TRACED BY	
DESIGNED BY	
NOTE BOOK	
QUANTITIES BY	
CHECKED BY	
No.	DATE

K+E CRYSTALENE LA 3888 TRACING PAPER

C.O. ADD. 131 S-1

FED. ROAD DIST. NO.	STATE	FED. AID PROJ. NO.	FISCAL YEAR	SHEET NO.	TOTAL SHEETS
HAWAII	HAW.	F078-1(7)	1971	C.O. ADD 131 S-1-A	302

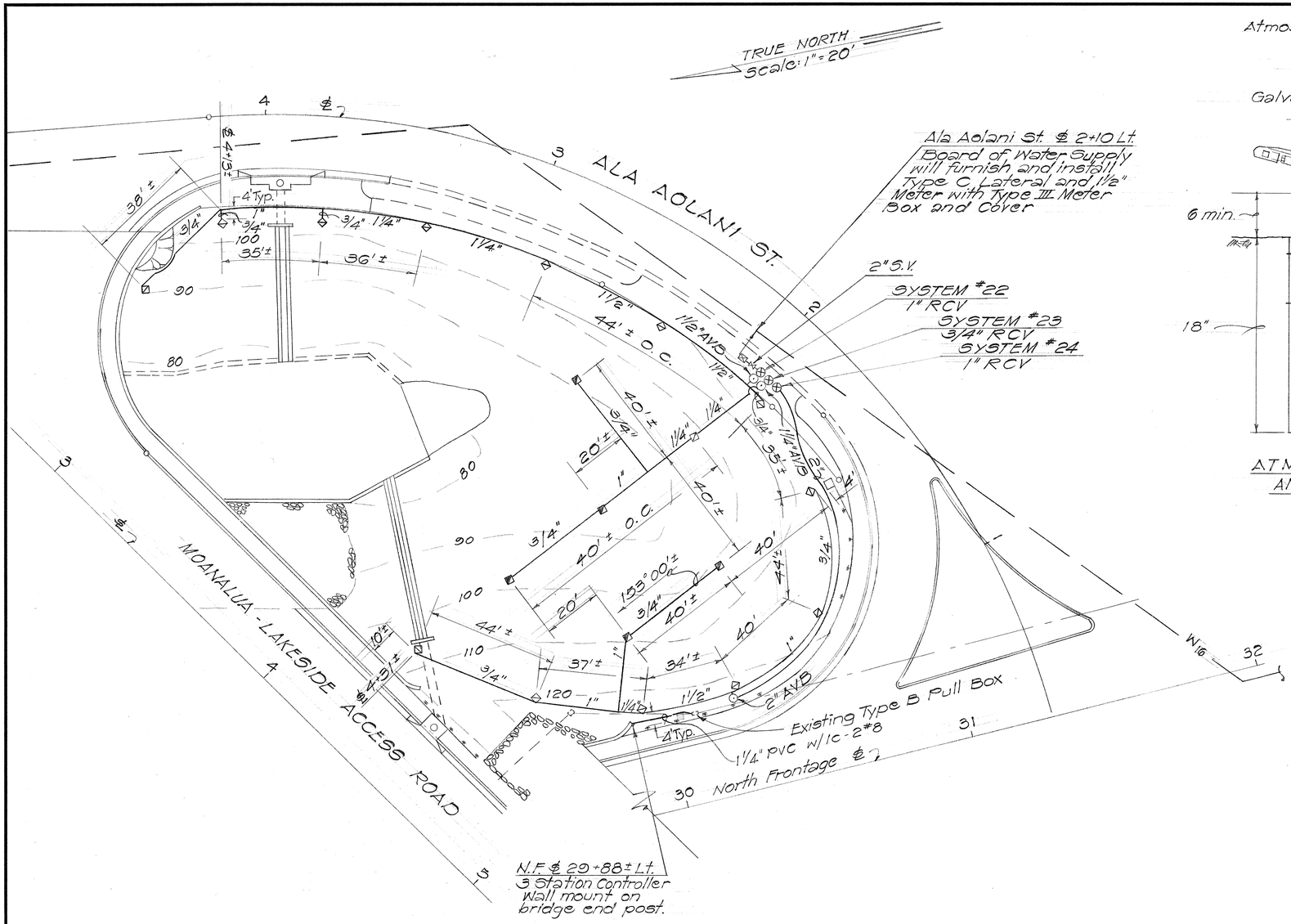

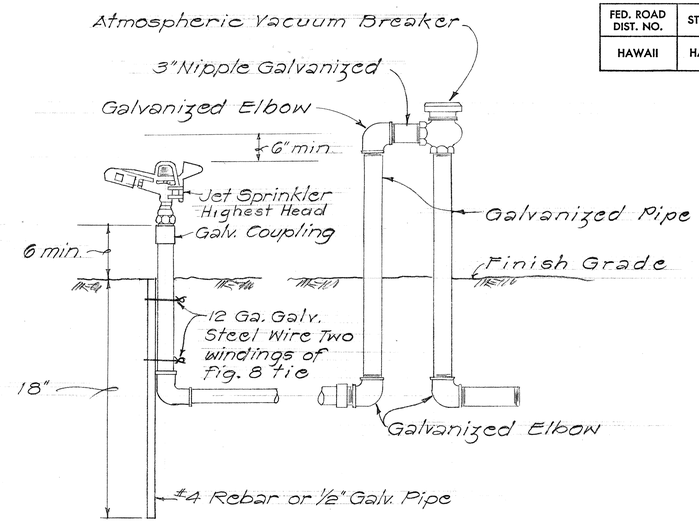

ATMOSPHERIC VACUUM BREAKER AND JET SPRINKLER DETAIL

Not to Scale

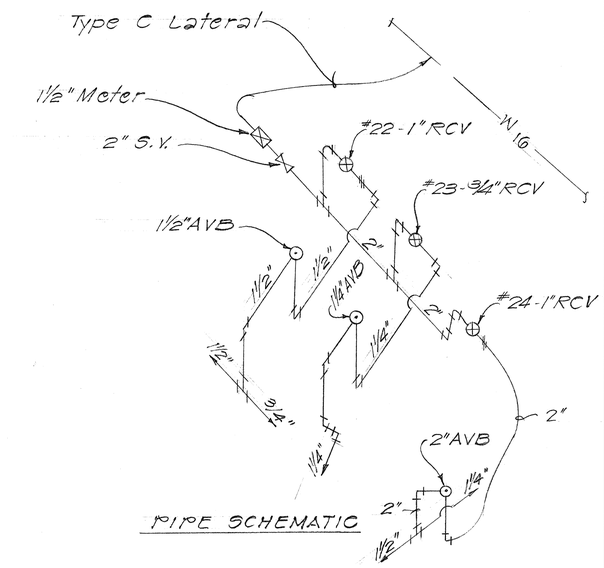

PIPE SCHEMATIC

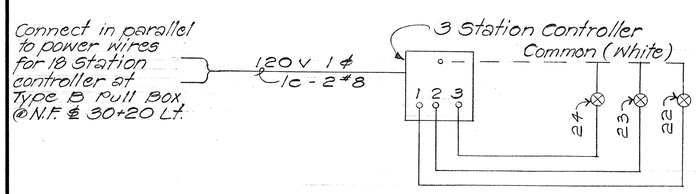

Wire Schematic

Note: All wires #14 Ga. unless indicated

Note: Set controller for the following setting of timing:

From March to October 60 minutes each station
From November to February 5 minutes each station
Start cycle at 6:00 P.M. every Monday, Tuesday, Wednesday, Thursday, Friday and Saturday.

DATE	REVISION
5/17/74	Sprinkler Systems at Ala Aolani St.

STATE OF HAWAII
DEPARTMENT OF TRANSPORTATION
HIGHWAYS DIVISION

SPRINKLER SYSTEM

MOANALUA ROAD
(Ala Aolani To Puuloa Interchange)
F.A.P. PROJECT No. F-078-1(7)

Scale: As Noted Date: May 1974

SHEET No. OF SHEETS

ORIGINAL PLAN		DATE
	SURVEY PLOTTED BY	
	DRAWN BY	
	TRACED BY	
	DESIGNED BY	
NOTE BOOK	QUANTITIES BY	
No.	CHECKED BY	

C.O. ADD 131 S-1-A

FED. ROAD DIST. NO.	STATE	FED. AID PROJ. NO.	FISCAL YEAR	SHEET NO.	TOTAL SHEETS
HAWAII	HAW.	F-078-1(7)	1971	C.O. ADD. 131 S-2	302

Revised: July 20, 1971
△ Sept. 30, 1971
△ July 14, 1972

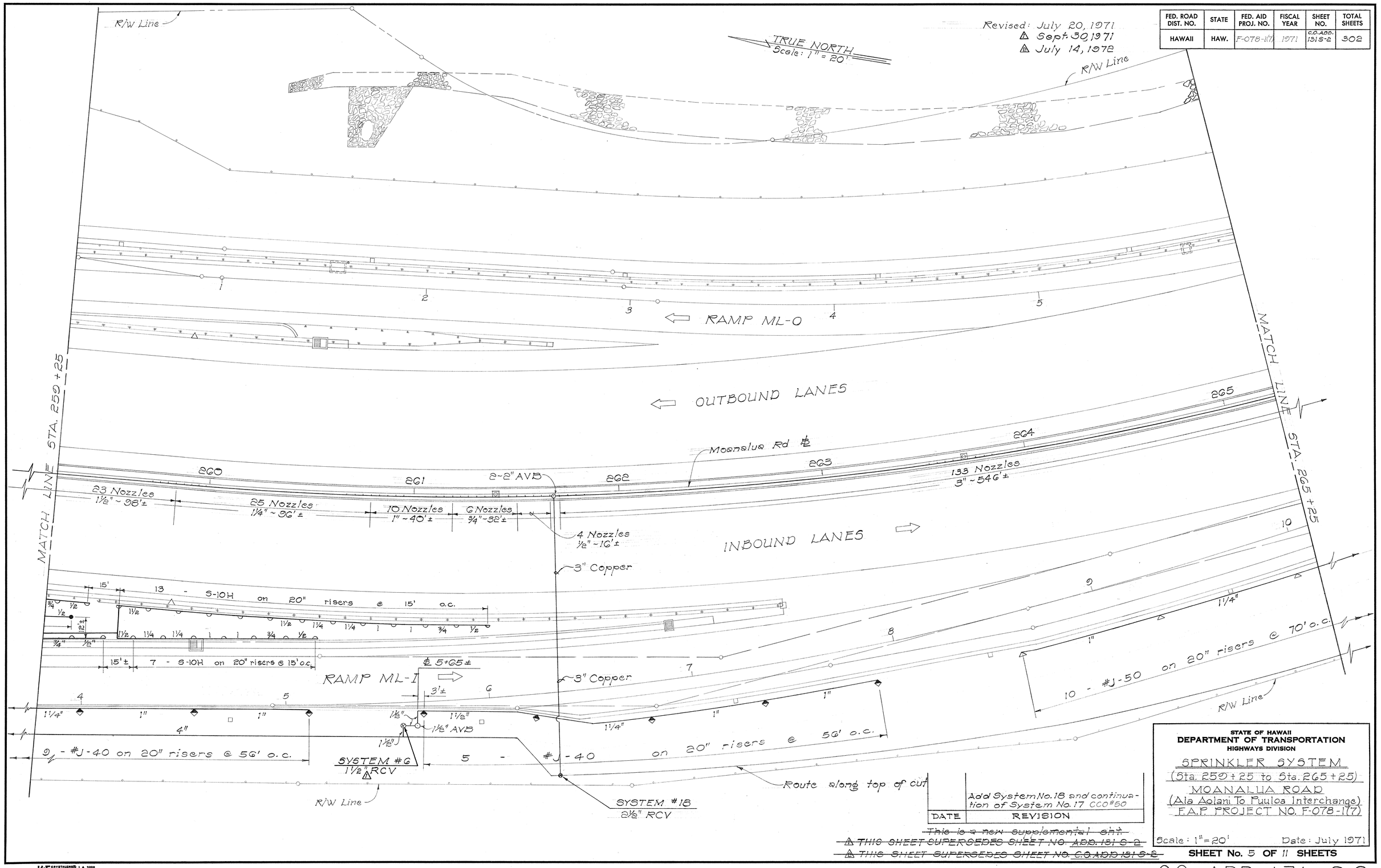

DATE	REVISION
	Add System No. 18 and continuation of System No. 17 CCO #50

~~This is a new supplemental sht.~~
~~△ THIS SHEET SUPERSEDES SHEET NO. ADD. 131 S-2~~
~~△ THIS SHEET SUPERSEDES SHEET NO. C.O. ADD. 131 S-2~~

STATE OF HAWAII
DEPARTMENT OF TRANSPORTATION
HIGHWAYS DIVISION

SPRINKLER SYSTEM
(Sta. 259 + 25 to Sta. 265 + 25)
MOANALUA ROAD
(Ala Aolani To Puuloa Interchange)
F.A.P. PROJECT NO. F-078-1(7)

Scale: 1" = 20' Date: July 1971

SHEET No. 5 OF 11 SHEETS

ORIGINAL PLAN — SURVEY PLOTTED BY / DRAWN BY / TRACED BY / DESIGNED BY / QUANTITIES BY / CHECKED BY — DATE
NOTE BOOK No.

K+E CRYSTALENE® LA 3888 TRACING PAPER

C.O. ADD. 131 S-2

FED. ROAD DIST. NO.	STATE	FED. AID PROJ. NO.	FISCAL YEAR	SHEET NO.	TOTAL SHEETS
HAWAII	HAW.	F-078-1(7)	1971	C.O. ADD. 131 S-3	302

Revised: July 20, 1971
△ Sept. 30, 1971

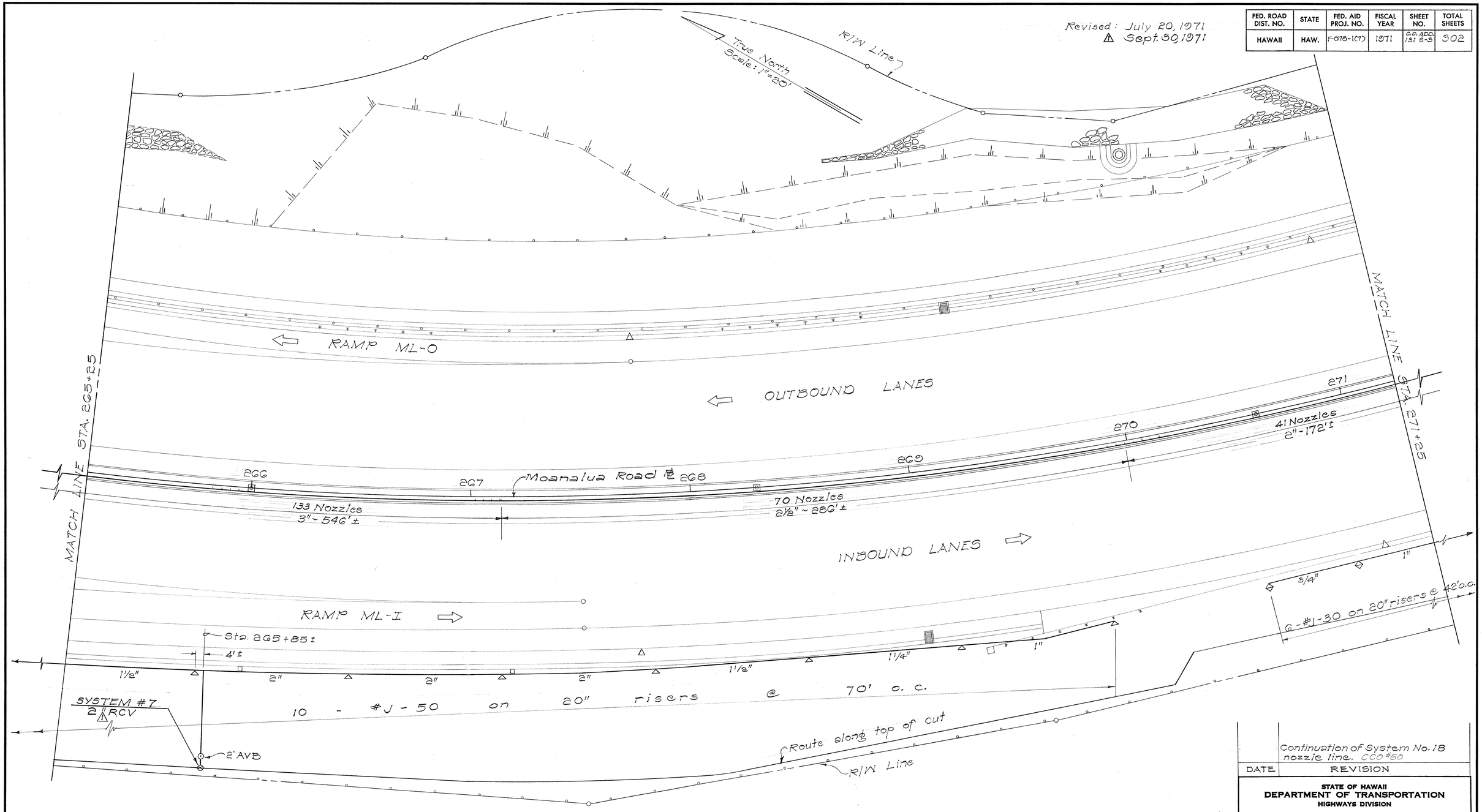

Continuation of System No. 18 nozzle line. CCO #50

DATE	REVISION

STATE OF HAWAII
DEPARTMENT OF TRANSPORTATION
HIGHWAYS DIVISION

SPRINKLER SYSTEM
(Sta. 265+25 to Sta. 271+25)
MOANALUA ROAD
(Ala Aolani To Puuloa Interchange)
F.A.P. PROJECT NO. F-078-1(7)

Scale: 1" = 20' Date: July 1971

SHEET No. 6 OF 11 SHEETS

~~This is a new supplemental sht.~~
~~△ THIS SHEET SUPERSEDES SHEET NO. ADD. 131 S-3~~

ORIGINAL PLAN	
NOTE BOOK No.	
SURVEY PLOTTED BY	DATE
DRAWN BY	
TRACED BY	
DESIGNED BY	
QUANTITIES BY	
CHECKED BY	

K+E CRYSTALENE® LA 3888 TRACING PAPER

C.O. ADD. 131 S-3

FED. ROAD DIST. NO.	STATE	FED. AID PROJ. NO.	FISCAL YEAR	SHEET NO.	TOTAL SHEETS
HAWAII	HAW.	F-078-1(7)	1971	C.O. ADD. 131 S-4	302

Revised: July 20, 1971
△ Sept. 30, 1971

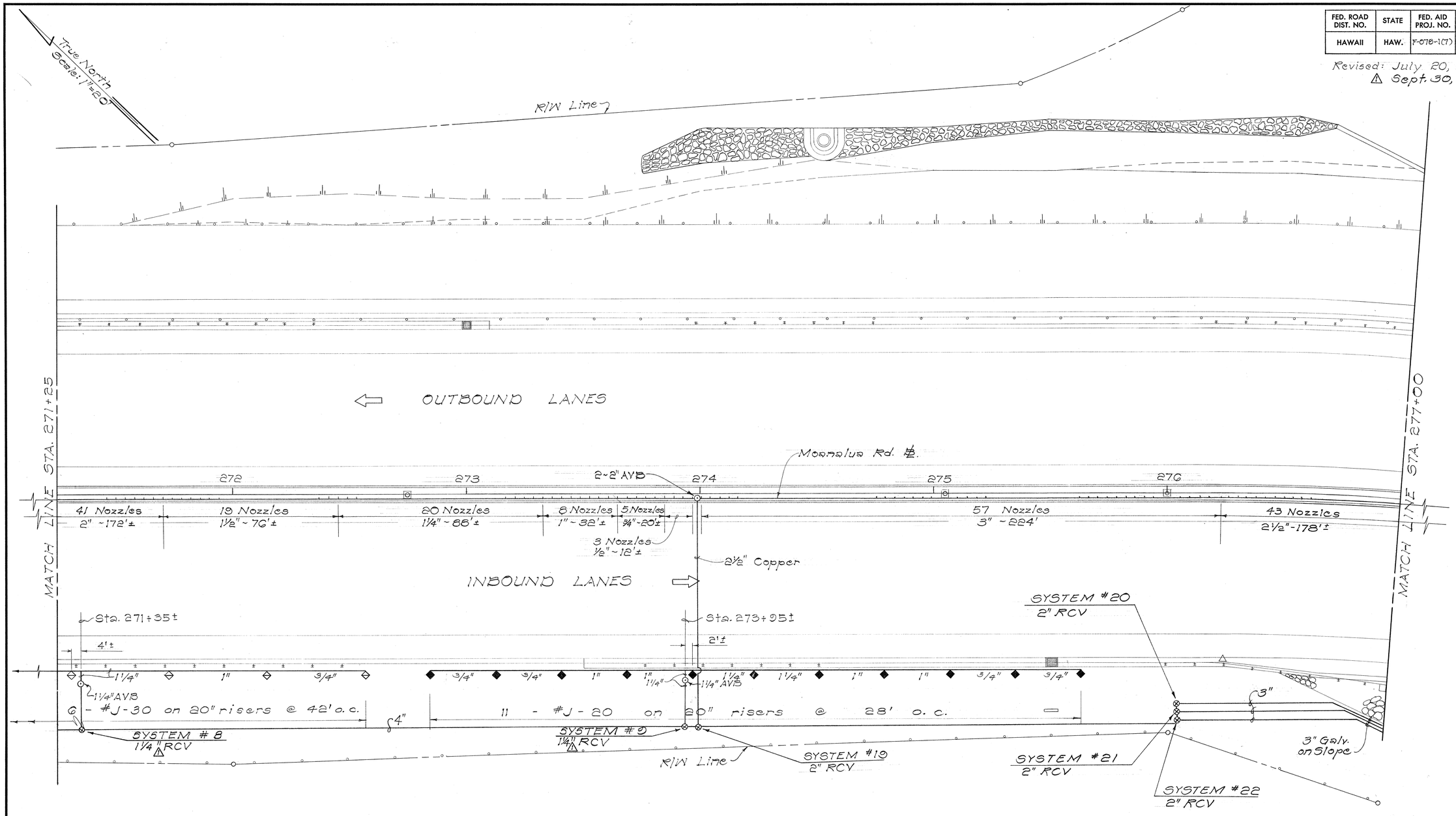

DATE	REVISION
5-21-73	Revised System #20 & 21. Added System 22. Add System No. 19 and continuation of System No. 18 CCO #50

~~This is a new supplemental sht.~~

△ ~~THIS SHEET SUPERSEDES SHEET NO. ADD 131 S-4~~

STATE OF HAWAII
DEPARTMENT OF TRANSPORTATION
HIGHWAYS DIVISION

SPRINKLER SYSTEM
(Sta. 271+25 to Sta. 277+00)
MOANALUA ROAD
(Ala Aolani To Puuloa Interchange)
F.A.P. PROJECT NO. F-078-1(7)

Scale: 1" = 20' Date: July 1971

SHEET No. 7 OF 11 SHEETS

ORIGINAL PLAN		DATE
	SURVEY PLOTTED BY	
	DRAWN BY	
	TRACED BY	
	DESIGNED BY	
NOTE BOOK	QUANTITIES BY	
No.	CHECKED BY	

K+E CRYSTALEMO LA 3888 TRACING PAPER

C.O. ADD. 131 S-4

Revised: July 20, 1971

FED. ROAD DIST. NO.	STATE	FED. AID PROJ. NO.	FISCAL YEAR	SHEET NO.	TOTAL SHEETS
HAWAII	HAW.	F-078-1(7)	1971	ADD. 131 S-5	302

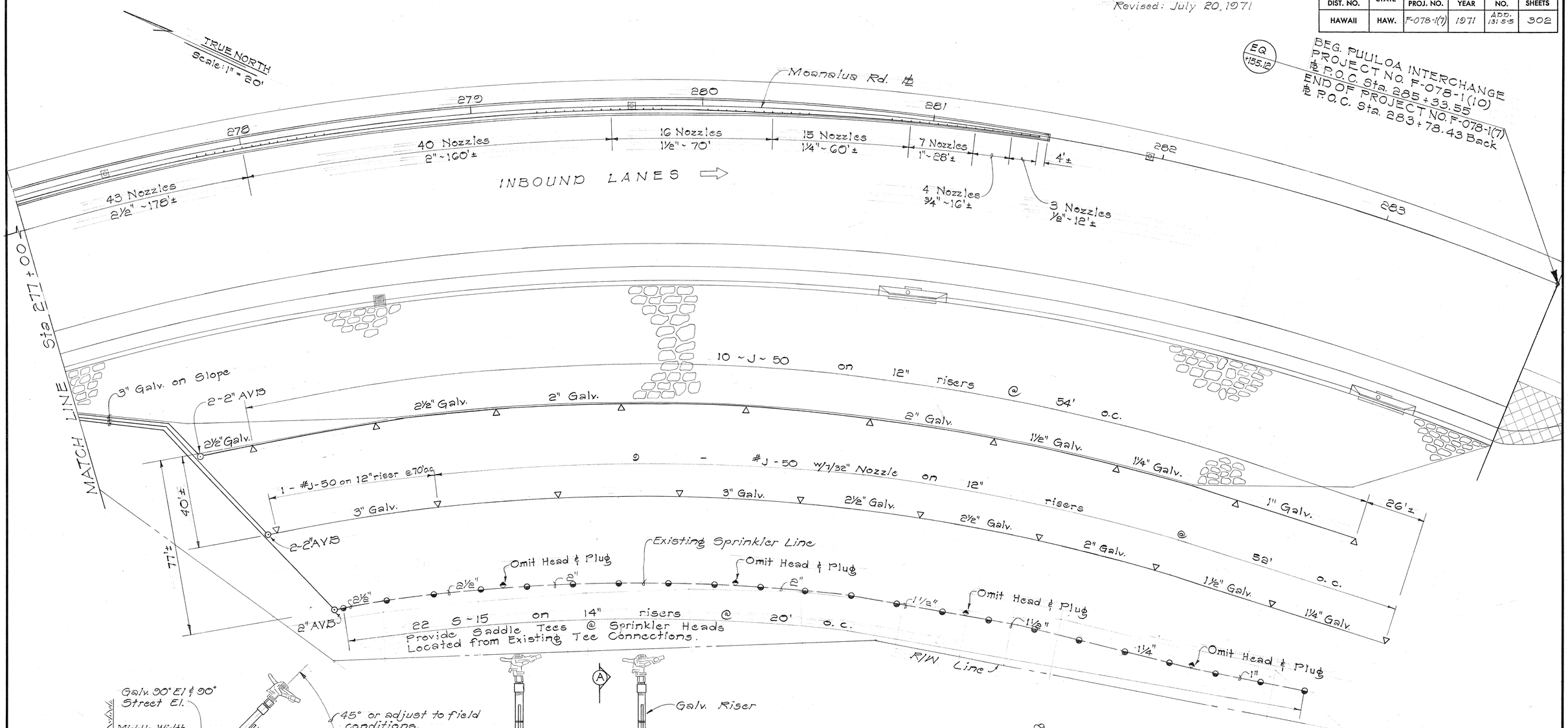

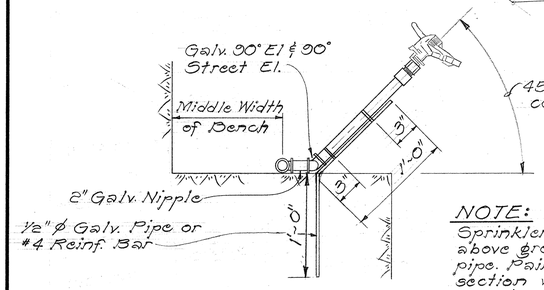

SECTION "A-A"

NOTE:
Sprinkler lines installed above ground shall be galvanized pipe. Paint exposed threaded section with black coal tar paint.
Drill 1" dia. hole x 12" deep for anchor rings and riser supports. Fill with epoxy grout.

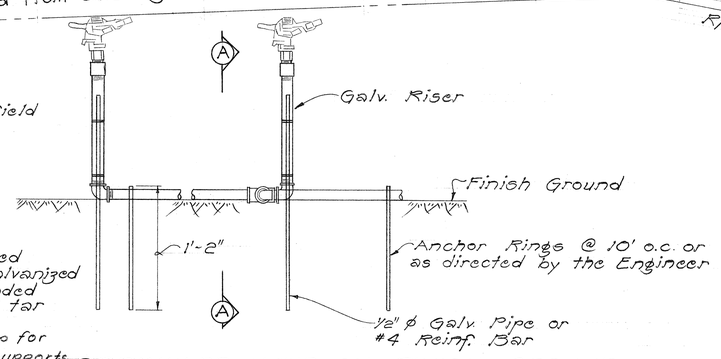

SPRINKLER LINE ON FINISH GROUND

DETAIL OF SPRINKLERS ON CUT SLOPE @ DAMON ESTATE

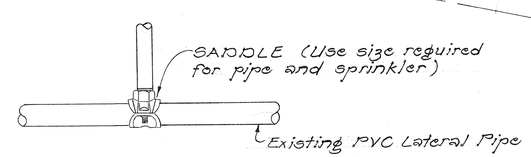

SADDLE TEE CONNECTION DETAIL

DATE	REVISION
5-21-73	Revised System 20 & 21. Added System 22. Continuation of System No. 19, add System No. 20 & 21. CCO #50

STATE OF HAWAII
DEPARTMENT OF TRANSPORTATION
HIGHWAYS DIVISION

SPRINKLER SYSTEM
(Sta. 277+00 to Sta. 283+78.43)
MOANALUA ROAD
(Ala Aolani To Puuloa Interchange)
F.A.P. PROJECT NO. F-078-1(7)

Scale: 1" = 20' Date: July 1971

THIS IS A NEW SUPPLEMENTAL SHT.

SHEET No. 8 OF 11 SHEETS

ORIGINAL PLAN	SURVEY PLOTTED BY	DATE
	DRAWN BY	" " " "
	TRACED BY	" " " "
NOTE BOOK	DESIGNED BY	
	QUANTITIES BY	
No.	CHECKED BY	

K+E CRYSTALENE® TRACING PAPER L.A. 3888

C.O. ADD. 131 S-5

FED. ROAD DIST. NO.	STATE	FED. AID PROJ. NO.	FISCAL YEAR	SHEET NO.	TOTAL SHEETS
HAWAII	HAW.	F-078-1(7)	1971	C.O.ADD. 131 S-6	302

Revised: July 20, 1971
△ Sept. 30, 1971
△ July 14, 1972

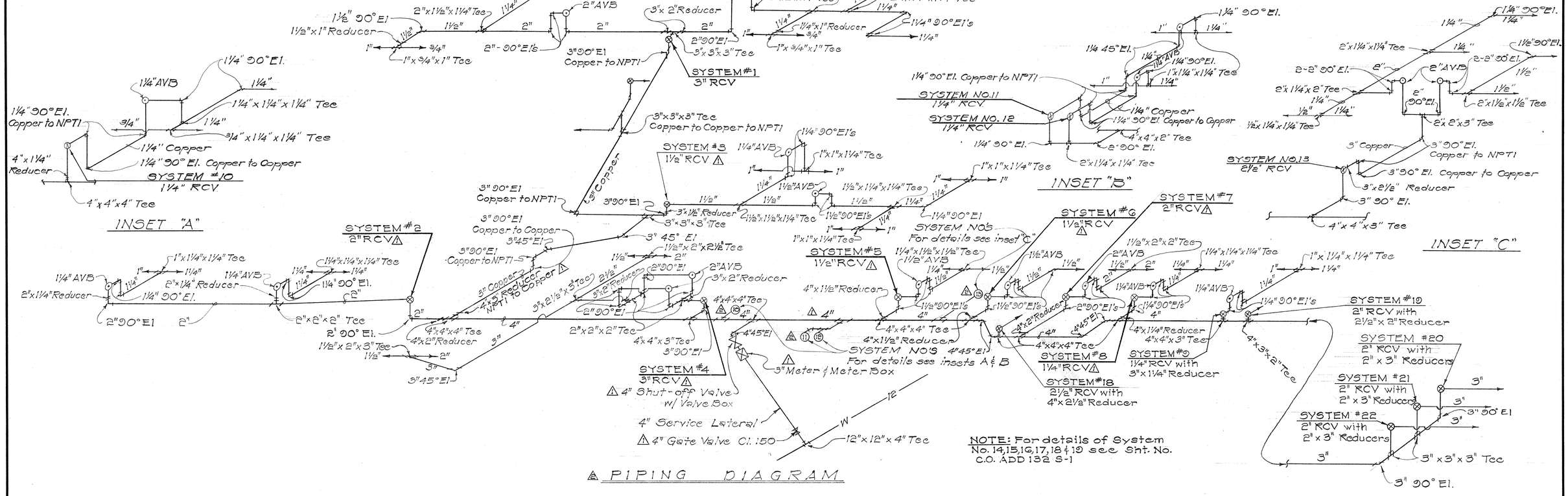

△ PIPING DIAGRAM

NOTE: For details of System No. 14,15,16,17,18 & 19 see Sht. No. C.O. ADD 132 S-1

ESTIMATED QUANTITIES

△ Structural Exc.	=	642 C.Y.
△ Furnish and install Valve Box	=	1 Ea.
Furnish and Installing 4" Gate Valve (Class 150)	=	1 Ea.
1" Remote Control Valve w/Type A Valve Box	=	1 Ea.
△ 1¼" Remote Control Valve w/Type A Valve Box	=	6 Ea.
△ 1½" Remote Control Valve w/Type A Valve Box	=	4 Ea.
△ 2" Remote Control Valve w/Type A Valve Box	=	6 Ea.
2½" Remote Control Valve w/Type A Valve Box	=	3 Ea.
△ 3" Remote Control Valve w/Type A Valve Box	=	2 Ea.
△ 1¼" Atmospheric Vacuum Breaker	=	8 Ea.
1½" Atmospheric Vacuum Breaker	=	3 Ea.
△ 2" Atmospheric Vacuum Breaker	=	21 Ea.
½" Diameter Galv. Steel Pipe	=	330 L.F.
△ 4" Diameter Cast Iron Pipe *		250 L.F.
△ ½" Diameter Pipe	=	90 L.F.
△ ¾" Diameter Pipe	=	1750 L.F.
△ 1" Diameter Pipe	=	2265 L.F.
△ 1¼" Diameter Pipe	=	1674 L.F.
△ 1½" Diameter Pipe	=	1032 L.F.
△ 2" Diameter Pipe	=	1498 L.F.
△ 2½" Diameter Pipe	=	46 L.F.
3" Diameter Pipe	=	478 L.F.
4" Diameter Pipe	=	2149 L.F.
△ 3" Diameter Pipe Roadway	=	358 L.F.
2½" Diameter Pipe Roadway	=	98 L.F.
△ 1¼" Diameter Pipe Roadway	=	120 L.F.
S-15 Sprinkler Head	=	22 Ea.

* Cast Iron Fitting incidental to Cast Iron Pipe

S-10 Sprinkler Head	=	40 Ea.
J-20 Jet Sprinkler	=	33 Ea.
△ J-30 Jet Sprinkler	=	66 Ea.
J-40 Jet Sprinkler	=	20 Ea.
J-50 Jet Sprinkler	=	44 Ea.
△ 2" PVC Conduit	=	320 L.F.
△ 18-Station Controller	=	1 Ea.
△ #14 Gage Direct Burial Wire	=	25,200 L.F.
△ Concrete, Cl. B	=	1.0 C.Y.
△ Reinf. Steel	=	24 lbs.
△ Brick Wall	=	6 L.F.
△ C.I. Manhole Frame & Cover, 20" size	=	1 Ea.
Nozzle Line	=	5568 L.F.
Restoration of Pavement	=	60 S.F.

△ For Electric Service Connection

Struct Exc.		21 C.Y.
1¼" PVC Conduit		210 L.F.
1¼" Steel Conduit		8 L.F.
1-#8		800 L.F.
Type "B" Pull Box		4 Ea.

¾" Galv. Pipe	=	80 L.F.
1" Galv. Pipe	=	54 L.F.
1¼" Galv. Pipe	=	106 L.F.
1½" Galv. Pipe	=	106 L.F.
2" Galv. Pipe	=	268 L.F.
2½" Galv. Pipe	=	234 L.F.
3" Galv. Pipe	=	726 L.F.
Plug existing riser connections	=	4 Ea.
Saddle Tee Connection	=	17 Ea.
Anchor Rings	=	150 Ea.

△ Approved for cross connection control requirements.
Sprinkler system to conform with Uniform plumbing code.
Takeshi Ayumi 9-30-71
Board of Water Supply Date

~~This is a new Supplemental Sht.~~
~~△ THIS SHEET SUPERSEDES SHEET NO. ADD. 131 S-6~~
~~△ THIS SHEET SUPERSEDES SHT NO. C.O. ADD. 131 S-6~~

DATE	REVISION
5-21-73	Revised estimated quantities & piping diagram for System 20, 21 & 22 Change estimated quantities, Add note for Systems No. 14, 15, 16, 17, 18 & 19, add Systems No. 20 & 21, removed Wire Diagram. CCO #50

STATE OF HAWAII
DEPARTMENT OF TRANSPORTATION
HIGHWAYS DIVISION

SPRINKLER SYSTEM

MOANALUA ROAD
(Ala Aolani To Puuloa Interchange)
F.A.P. PROJECT NO. F-078-1(7)

Date: July, 1971

SHEET No. 9 OF 11 SHEETS

C.O. ADD. 131 S-6

ORIGINAL PLAN	SURVEY PLOTTED BY	DATE
	DRAWN BY	
	TRACED BY	
	DESIGNED BY	
NOTE BOOK	QUANTITIES BY	
No.	CHECKED BY	

K+E CRYSTALENE LA 3888

FED. ROAD DIST. NO.	STATE	FED. AID PROJ. NO.	FISCAL YEAR	SHEET NO.	TOTAL SHEETS
HAWAII	HAW.	F-078-1(7)	1971	C.O. ADD 131 S-7	308

Revised July 20, 1971
△1 Sept. 30, 1971
△2 July 14, 1972

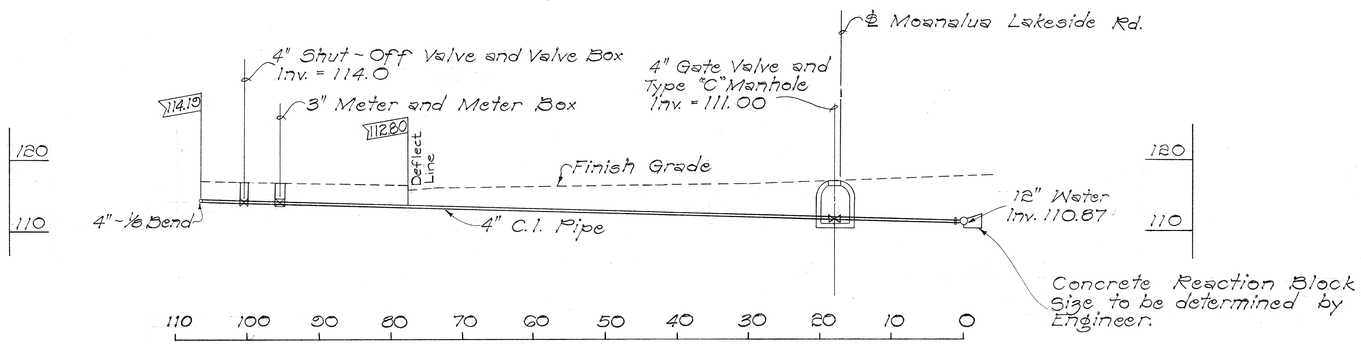

△1 PROFILE OF 4" SERVICE LATERAL

Scale: 1" = 10'

OPERATING TIME SCHEDULE

STA. NO.	VALVE NO.	TIME IN MIN.
1	14	5
2	10	45
3	15	5
4	16	5
5	17	5
6	4	45
7	1	5
8	2 & 3	45
9	13	5
10	18	5
11	22	18
12	8, 11 & 12	45
13	7	60
14	19	5
15	5 & 6	60
16	9	60
17	21	18
18	20	18

Start cycle @ 6:00 P.M. everyday

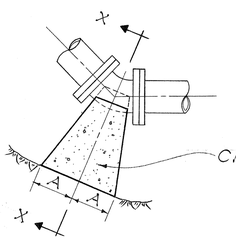

PLAN (BENDS)

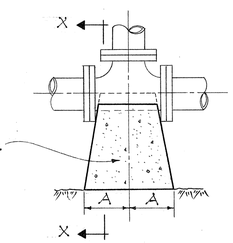

PLAN (TEES)

Class B Conc.

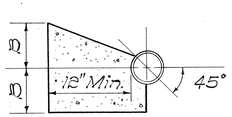

SECTION "X-X"

SIZE	1/4 BEND		1/8 BEND		TEES	
	A	B	A	B	A	B
3"	5"	5"	3.5"	3.5"	4"	4"
4"	6"	6"	5"	5"	6"	6"

△1 DETAIL OF CONCRETE BLOCKS

Not to Scale

NOTES:

1. All bearing surfaces to be carried to undisturbed ground.
2. Design based on 116 p.s.i. static pressure plus 120 p.s.i. water hammer pressure and 4000 p.s.f. soil bearing pressure.
3. Concrete Reaction Blocks are recommended sizes. Engineer may change requirements to meet field conditions.

~~△1 THIS SHEET SUPERSEDES AND REPLACES SHEET NO. ADD 131 S-7~~

~~△2 THIS SHEET SUPERSEDES SHT. NO. C.O. ADD. 131 S-7~~

DATE	REVISION
5-21-73	Revised timing schedule for systems 20, 21, & 22 Add Operating Time Schedule CCO #50

STATE OF HAWAII
DEPARTMENT OF TRANSPORTATION
HIGHWAYS DIVISION

SPRINKLER SYSTEM

MOANALUA ROAD
(Ala Aolani To Puuloa Interchange)
F.A.P. PROJECT NO. F-078-1(7)

Not to Scale — Date: July 1971

SHEET No. 10 OF 11 SHEETS

ORIGINAL PLAN	SURVEY PLOTTED BY	DATE
	DRAWN BY	"
	TRACED BY	"
NOTE BOOK	DESIGNED BY	
	QUANTITIES BY	
No.	CHECKED BY	

C.O. ADD. 131 S-7

K+E CRYSTALENE® TRACING PAPER LA 3888

FED. ROAD DIST. NO.	STATE	FED. AID PROJ. NO.	FISCAL YEAR	SHEET NO.	TOTAL SHEETS
HAWAII	HAW.	F-078-1(7)	1971	ADD. 132	302

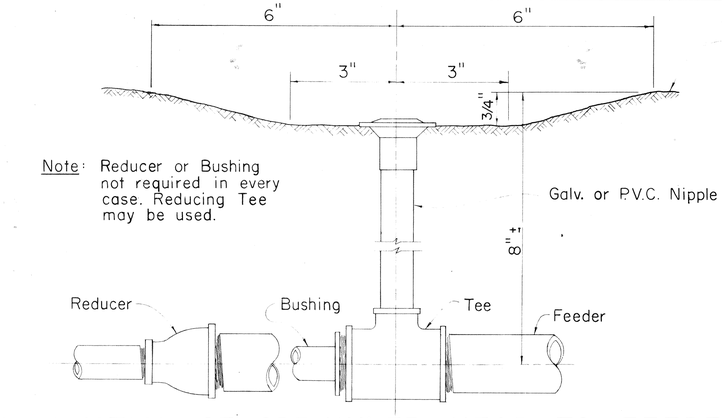

CONNECTION OF SPRINKLER HEAD TO FEEDER

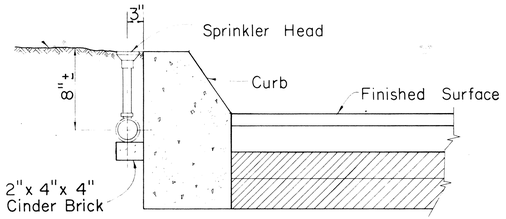

TYPICAL DETAIL OF SPRINKLER HEAD AT CONC. CURB

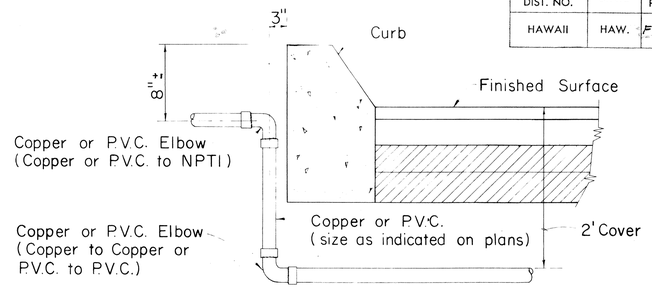

TYPICAL DETAIL OF ROADWAY CROSSING

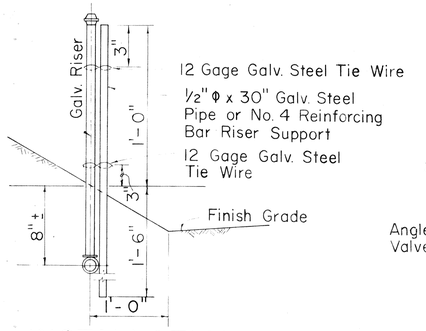

INSTALLATION OF SPRINKLER ON SLOPE

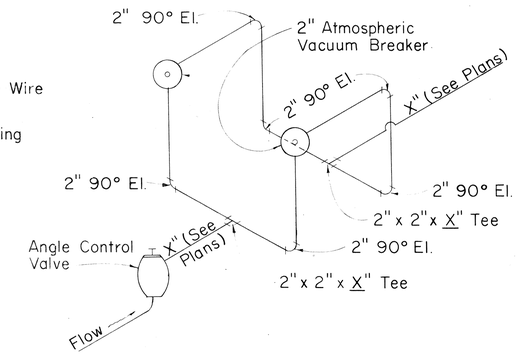

DOUBLE - 2" VACUUM BREAKER

(ATMOSPHERIC TYPE)

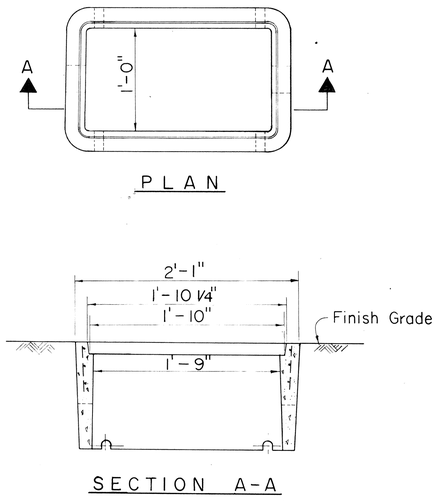

TYPE "A" VALVE BOX

GENERAL NOTES

1. Type "A" Valve Box and Pressure Regulator Box is similar to a Honolulu Board of Water Supply Type "X" Meter Box. However, instead of the words "Board of Water Supply" and "Water Meter" on the Cast Iron Covers, imprint the words "Sprinkler Valve" on the Valve Box Cover and "Pressure Regulator" on the Pressure Regulator Box Cover.
2. Locate the sprinkler valve at a sufficient depth in the Valve Box to make it operable with the cover in place.
3. Side openings in the Brick wall for the Pressure Regulator Box shall be provided to correspond to the location of the regulator inlet and outlet.
4. Riser less than 20" will not require support.
5. Riser support will be considered incidental to the various items of the sprinkler system.

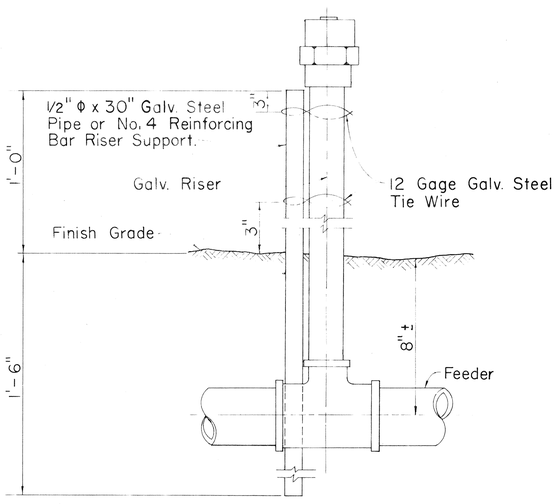

DETAIL OF SPRINKLER HEAD ON RISER

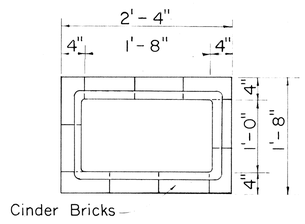

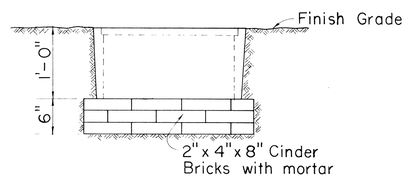

PRESSURE REGULATOR BOX

This sht replaces sht. no. 132

APPROVAL RECOMMENDED:
G. Sakamoto — HYDRAULIC DESIGN ENGINEER — DATE 6-5-71

APPROVED:
Walter G. Bakalai — ASSISTANT CHIEF, ENGINEERING — DATE 6-5-71

NO.	REVISION	APPROVED BY	DATE
1.	This sheet supersedes sheet DH18 dated December 17, 1969.	H.C.	6-5-71

STATE OF HAWAII
DEPARTMENT OF TRANSPORTATION
HIGHWAYS DIVISION

STANDARD DETAILS

SPRINKLER SYSTEM

Not to Scale

SHEET No. 11 OF 11 SHEETS DH 18

ADD. 132

ORIGINAL PLAN	SURVEY PLOTTED BY	DATE
	DRAWN BY	"
	TRACED BY	"
NOTE BOOK	DESIGNED BY	"
	QUANTITIES BY	"
No.	CHECKED BY	"

FED. ROAD DIST. NO.	STATE	FED. AID PROJ. NO.	FISCAL YEAR	SHEET NO.	TOTAL SHEETS
HAWAII	HAW.	F-078-1(7)	1971	C.O. ADD 132 S-1	302

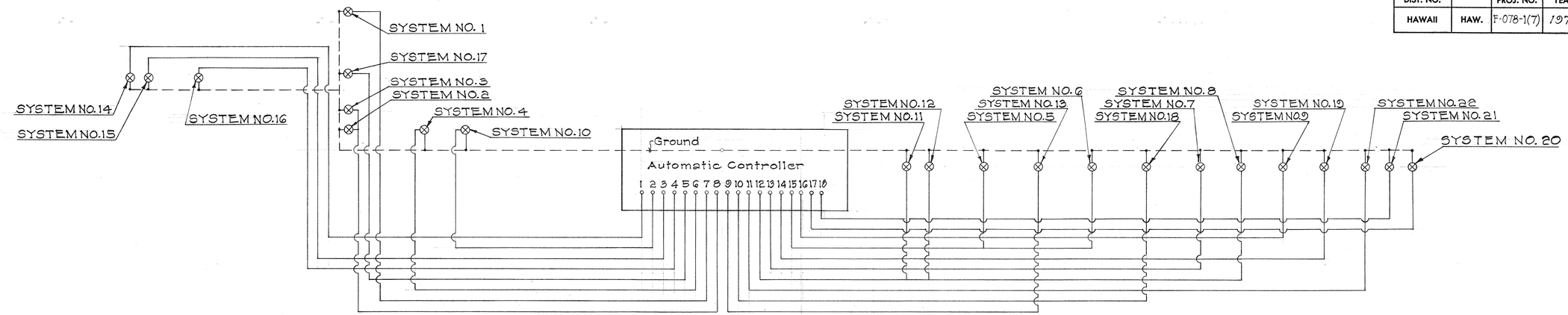

NOTE: All wire shall be No. 14 gage
(wire size for 3.5 watts, 24 volts solenoid)

SCHEMATIC WIRE DIAGRAM FOR AUTOMATIC SPRINKLING

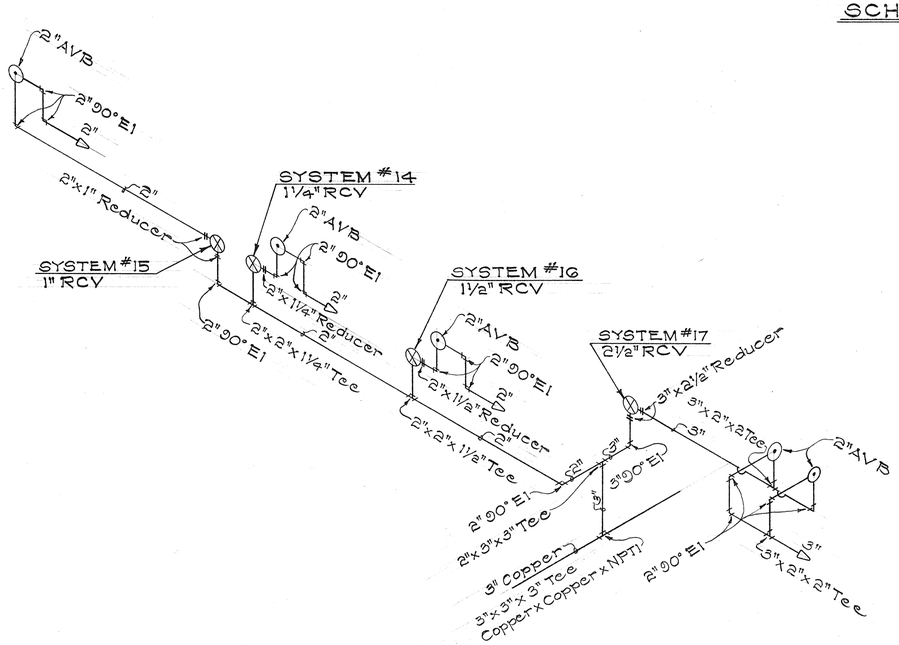

SYSTEM NO. 14, 15, 16 & 17

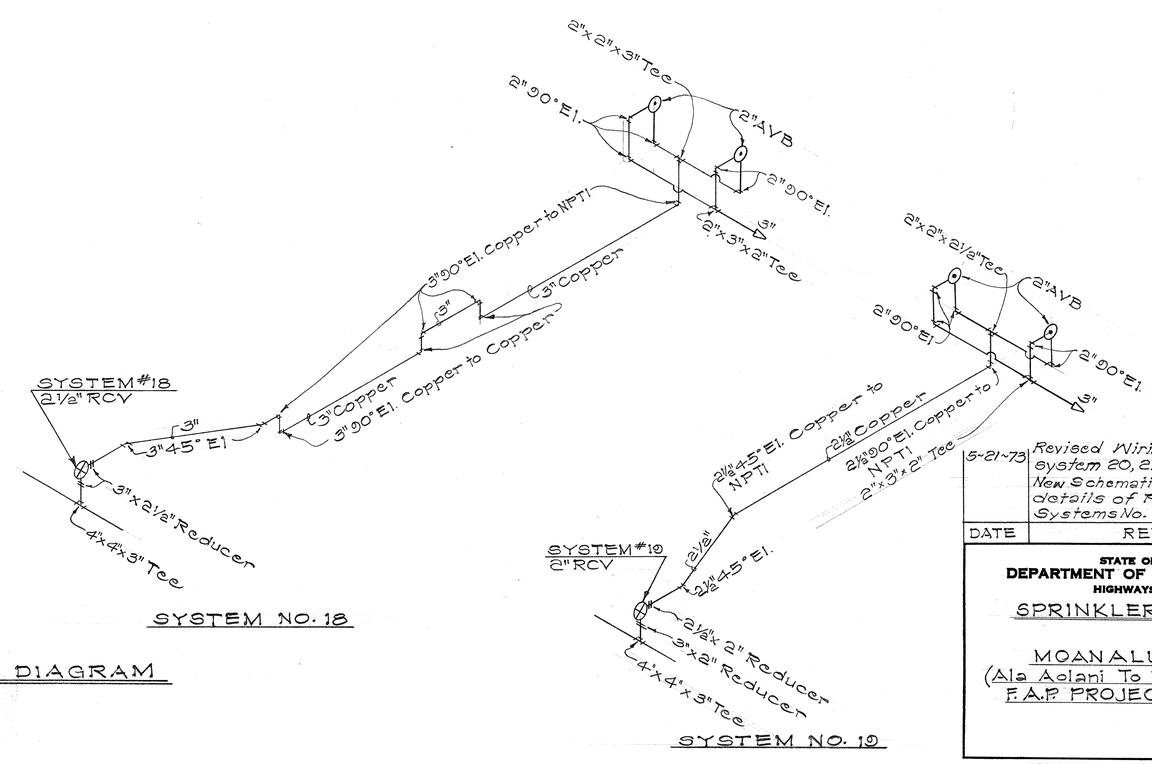

SYSTEM NO. 18

SYSTEM NO. 19

PIPING DIAGRAM

DATE	REVISION
5-21-73	Revised Wiring Diagram for system 20, 21, & Added System 22 New Schematic Wire Diagram and details of Piping Diagram for Systems No. 14, 15, 16, 17, 18 & 19.

STATE OF HAWAII
DEPARTMENT OF TRANSPORTATION
HIGHWAYS DIVISION

SPRINKLER SYSTEM

MOANALUA ROAD
(Ala Aolani To Puuloa Interchange)
F.A.P. PROJECT NO. F-078-1(7)

Date: Dec. 1972

SHEET No. 11A OF 11 SHEETS

ORIGINAL PLAN — SURVEY PLOTTED BY / DRAWN BY / TRACED BY / DESIGNED BY / QUANTITIES BY / CHECKED BY — DATE — NOTE BOOK No. — K+E CRYSTALENE TRACING PAPER

C.O. ADD 132 S-1