FED. ROAD DIST. NO.	STATE	FED. AID PROJ. NO.	FISCAL YEAR	SHEET NO.	TOTAL SHEETS
HAWAII	HAW.	F078-1(11)	1969	67	258

Revised: Oct. 16, 1970

DRAINAGE SUMMARY

STRUCTURES — ESTIMATED QUANTITIES

NUMBER	TYPE	STATION	206.01 Structure Excavation Other than at Bridges	206.02 Structure Excavation for Drainage System	207.01 Ditch and Channel Excavation	503.002 Concrete for Drainage System	603.0020 Class "B" Concrete or Shotcrete for Drainage Ditch	503.202 Class "B" Concrete for Drainage Ditch	602.103 Reinforcing Steel for Drainage System	603.0010 Bed Course Material for Culvert	603.2096 66-inch Corrugated Metal Pipe No. 12 Ga.	603.6179 54-inch CMP, No. 14 Ga. or 48-inch RCP, Cl. III	603.6200 54-inch CMP, No. 10 Ga. or 48-inch RCP, Cl. III	603.6260 54-inch CMP, No. 10 Ga. or 54-inch RCP, Cl. III	603.6299 60-inch CMP, No. 12 Ga. or 54-inch RCP, Cl. III	603.6330 60-inch CMP, No. 12 Ga. or 60-inch RCP, Cl. III	603.6419 66-inch CMP, No. 12 Ga. or 66-inch RCP, Cl. III	603.7200 24" CMP, No. 14 Ga. or 24" RCP, Cl. III or 24" ACP, Cl. III	603.7220 24" CMP, No. 12 Ga. or 24" RCP, Cl. III or 24" ACP, Cl. III	603.7240 24" CMP, No. 10 Ga. or 24" RCP, Cl. III or 24" ACP, Cl. III	603.7300 30" CMP, No. 10 Ga. or 24" RCP, Cl. III or 24" ACP, Cl. III	603.7340 30" CMP, No. 12 Ga. or 30" RCP, Cl. III or 30" ACP, Cl. III	603.7360 30" CMP, No. 10 Ga. or 30" RCP, Cl. III or 30" ACP, Cl. III	603.7440 36" CMP, No. 12 Ga. or 36" RCP, Cl. III or 36" ACP, Cl. III	604.010 Brick Wall for Storm Drain Manholes	604.201 Type "A" Cast Iron Frame and Cover	~~604.243 Type C Cast Iron Frame and Grate~~	604.231 Type "A-9" Steel Frame and Grate	604.232 Type "A-12" Steel Frame and Grate	604.236 Type G1214 Steel Frame and Grates	604.238 Type G1214 Steel Frame and Grates	604.250 Type "S" Trash Rack	604.252 Type "M" Trash Rack	604.302 Removing, Cleaning, Painting and Reinstalling Type B Cast Iron Frame and Cover	604.202 Type "B" Cast Iron Frame and Cover	~~609.700 Gutter, Type 7A~~	609.702 Gutter, Type 7B	609.704 Gutter, Type 7C	~~609.706 Gutter, Type 7D~~	612.02 Grouted Rubble Slope Protection
		UNIT USED	C.Y.	C.Y.	C.Y.	C.Y.	C.Y.	C.Y.	LB.	C.Y.	L.F.	L.F.	L.F.	L.F.	L.F.	L.F.	L.F.	L.F.	L.F.	L.F.	L.F.	L.F.	L.F.	L.F.	L.F.	L.F.	Ea.	Ea.	Ea.	Ea.	Ea.	Ea.	Ea.	Ea.	Ea.	Ea.	L.F.	L.F.	L.F.	L.F.	C.Y.
℄ MOANALUA ROAD																																									
1	STD. CHW	207+91± Lt.			59		19	3.5	60																																
2	"E" SDMH	209+00 CD % Lt.		291				4.0	125	32															170	4	1														
3	Med. CD1	209+00		123		13.5			115	12															60					6											
4	Med. CD1	211+50		83		3.0			115	13									88											2											
5	Med. CD1	214+00		126		3.5			115	15										102										2											
6	G1214 CD1	216+00 Rt.		47		2.5			35	6										34												1									
7	Med. CD1	217+62		76		3.0			115	12										76										2											
8	G1214 CD1	217+62 Rt.		65		2.5			35	6										40												1									
9	G1214 CD1	220+95 Rt.		279		2.5			35	46										310												1									
10	Med. CD1	220+95		83		2.5			65	11										74										1											
11	G1214 CD1	226+50 Lt.		117		2.0			35	20										134												1									
12	"D" SDMH	227+00 5' % Fr. Rt. E.P.		428				0.5	30	66										446						6	1														
13	G1214 CD1	227+00 Rt.		34		2.0			35	1										6												1									
14	G1214 CD1	230+91 Lt.		110		2.0			35	20									134													1									
15	"D" SDMH	231+50 5' % Fr. Rt. E.P.		500				0.5	30	68								458								6	1														
16	G1214 CD1	231+50 Rt.		16		3.0			35	1									6													1									
17	G1214 CD1	236+00 Lt.		113		2.5			35	17									114													1									
18	"D" SDMH	236+10 5' % Fr. Rt. E.P.		580				0.5	30	66										442						6	1														
19	G1214 CD1	236+10 Rt.		16		3.0			35	1									6													1									
20	G1214 "N" CD1	240+55 Rt.		27		8.0			258	2				6																		1									
21	"D-1" SDMH	240+55 5' % Fr. Rt. E.P.		55		6.5			1180	29						112											1														
22	G1214 "M" CD1	240+65 Lt.		271		7.0			323	18						66																1									

Note: "Whenever gages for corrugated metal pipes or pipe-arches are called for on the plans, the equivalent thickness in inches shall be used. The equivalent are as follows:"

14 Ga. = 0.079 inch
12 " = 0.109 "
10 " = 0.138 "
8 " = 0.168 "

ORIGINAL PLAN — DRAWN BY — TRACED BY — DESIGNED BY — QUANTITIES BY — CHECKED BY — NOTE BOOK No.

DRAINAGE SUMMARY

FED. ROAD DIST. NO.	STATE	FED. AID PROJ. NO.	FISCAL YEAR	SHEET NO.	TOTAL SHEETS
HAWAII	HAW.	F078(11)	1969	68	258

Revised: Oct. 16, 1970
Apr. 15, 1971
Oct. 29, 1971

STRUCTURES — ESTIMATED QUANTITIES

NUMBER	TYPE	STATION	206.01 Structure Excavation Other than at Bridges (C.Y.)	206.02 Structure Excavation for Drainage System (C.Y.)	207.01 Ditch and Channel Excavation (C.Y.)	503.002 Concrete for Drainage System (C.Y.)	603.0020 Class "B" Concrete or Shotcrete for Drainage Ditch (C.Y.)	508.202 Class "S" Concrete for Drainage System (C.Y.)	602.103 Reinforcing Steel for Drainage System (LB.)	603.0010 Bed Course Material for Culvert (C.Y.)	603.2096 66-inch Corrugated Metal Pipe No. 12 Ga. (L.F.)	603.6179 54-inch CMP No. 14 Ga. or 48-inch RCP Cl. III (L.F.)	603.6200 54-inch CMP No. 10 Ga. or 48-inch RCP Cl. III (L.F.)	603.6260 54-inch CMP No. 10 Ga. or 54-inch RCP Cl. III (L.F.)	603.6299 60-inch CMP No. 12 Ga. or 54-inch RCP Cl. III (L.F.)	603.6339 60-inch CMP No. 12 Ga. or 60-inch RCP Cl. III (L.F.)	603.6419 66-inch CMP No. 12 Ga. or 66-inch RCP Cl. III (L.F.)	603.7200 24" CMP No. 14 Ga. or 24" RCP Cl. III or 24" ACP Cl. III (L.F.)	603.7220 24" CMP No. 12 Ga. or 24" RCP Cl. III or 24" ACP Cl. III (L.F.)	603.7240 24" CMP No. 10 Ga. or 24" RCP Cl. III or 24" ACP Cl. III (L.F.)	603.7300 30" CMP No. 10 Ga. or 24" RCP Cl. III or 24" ACP Cl. III (L.F.)	603.7340 30" CMP No. 12 Ga. or 30" RCP Cl. III or 30" ACP Cl. III (L.F.)	603.7320 30" CMP No. 10 Ga. or 30" RCP Cl. III or 30" ACP Cl. III (L.F.)	603.7440 36" CMP No. 12 Ga. or 36" RCP Cl. III or 36" ACP Cl. III (L.F.)	604.010 Brick Wall for Storm Drain Manholes (L.F.)	604.201 Type "A" Cast Iron Frame and Cover (Ea.)	~~604.243 Type C Cast Iron Frame and Grate (Ea.)~~	604.231 Type "A-9" Steel Frame and Grate (Ea.)	604.232 Type "A-12" Steel Frame and Grate (Ea.)	604.236 Type G1614 Steel Frame and Grates (Ea.)	604.238 Type G124 Steel Frame and Grates (Ea.)	604.250 Type "S" Trash Rack (Ea.)	604.252 Type "M" Trash Rack (Ea.)	604.302 Removing Casting, Painting & Reinstalling Type "B" Cast Iron Frame and Cover (Ea.)	604.202 Type "B" Cast Iron Frame and Cover (Ea.)	~~609.700 Gutter, Type 7A (L.F.)~~	609.702 Gutter, Type 7B (L.F.)	609.704 Gutter, Type 7C (L.F.)	~~609.706 Gutter, Type 7D (L.F.)~~	612.02 Grouted Rubble Slope Protection (C.Y.)
℄ MOANALUA ROAD ~ CONT.																																							
23	G1614 CD1	265+00 Lt.		7		2.5			21																			1											
24	Stream Realignment	261+00 to 266+00	408		3347																																		958
25	G1614 CD1	260+58 Lt.		169		9.5			97						70													1											34
RED HILL ACCESS ROAD																																							
	"A" C.B.	1+50 Rt.		174		7.5			145	19									128																1				
	"D" C.B.	2+58 Lt.		220		6.0			77	17									110																1				
	"A" C.B.	Coset Gd. Rd. 0+58 Lt.		156		7.5			145	13									86																1				
	"E" SDMH	3+85 Lt.		430				4.5	254	26									176						4	1													
ASPHALT CONCRETE GUTTERS																																							
Ramp (RH-I) 0+27± Rt. to 0+59± Rt.																																					30		
Ramp (RH-I) 0+65± Rt. to 2+75 Rt.																																					210		
Ramp (RH-I) 2+75 Rt. to 12+70 Rt.																																					995		
Ramp (RH-O) 2+40± Lt. to 13+00 Lt.																																				1060			
℄ 208+30± Rt. to 209+65 Rt.																																				190			
℄ 215+75± Rt. to 227+00 Rt.																																				1125			
℄ 227+00 Rt. to 238+00 Rt.																																				1100			
℄ 225+00 Lt. to 227+00 Lt.																																				200			
℄ 227+00 Lt. to 238+00 Lt.																																				1100			

ORIGINAL PLAN	SURVEY PLOTTED BY / DRAWN BY / TRACED BY / DESIGNED BY / QUANTITIES BY / CHECKED BY	DATE
NOTE BOOK		
No.		

THIS SHEET SUPERSEDES SHT. NO. 68

FED. ROAD DIST. NO.	STATE	FED. AID PROJ. NO.	FISCAL YEAR	SHEET NO.	TOTAL SHEETS
HAWAII	HAW.	F078-1(11)	1969	69	258

Revised: Oct. 16, 1970

DRAINAGE SUMMARY

STRUCTURES — ESTIMATED QUANTITIES

NUMBER	TYPE	STATION	206.01 Structure Excavation Other than at Bridges	206.02 Structure Excavation for Drainage System	207.01 Ditch and Channel Excavation	503.002 Concrete for Drainage System	C03.0020 Class "B" Concrete or Shotcrete for Drainage Ditch	503.202 Class "B" Concrete for Drainage System	602.103 Reinforcing Steel for Drainage System	603.0010 Bed Course Material for Culvert	603.2096 66-inch Corrugated Metal Pipe No. 12 Ga.	603.6179 54-inch CMP, No. 14 Ga. or 48-inch RCP, Cl. III	603.6200 54-inch CMP, No. 10 Ga. or 48-inch RCP, Cl. III	603.6260 54-inch CMP, No. 10 Ga. or 54-inch RCP, Cl. III	603.6299 60-inch CMP, No. 12 Ga. or 54-inch RCP, Cl. III	603.6339 60-inch CMP, No. 12 Ga. or 60-inch RCP, Cl. III	603.6419 66-inch CMP, No. 12 Ga. or 66-inch RCP, Cl. III	603.7200 24" CMP, No. 14 Ga. or 24" RCP, Cl. III or 24" ACP, Cl. III	603.7220 24" CMP, No. 12 Ga. or 24" RCP, Cl. III or 24" ACP, Cl. III	603.7240 24" CMP, No. 10 Ga. or 24" RCP, Cl. III or 24" ACP, Cl. III	603.7300 30" CMP, No. 10 Ga. or 24" RCP, Cl. III or 24" ACP, Cl. III	603.7340 30" CMP, No. 12 Ga. or 30" RCP, Cl. III or 30" ACP, Cl. III	603.7360 30" CMP, No. 10 Ga. or 30" RCP, Cl. III or 30" ACP, Cl. III	603.7440 36" CMP, No. 12 Ga. or 36" RCP, Cl. III or 36" ACP, Cl. III	604.010 Brick Wall for Storm Drain Manholes	604.201 Type "A" Cast Iron Frame and Cover	~~604.245 Type C Cast Iron Frame and Grate~~	604.231 Type "A-9" Steel Frame and Grate	604.232 Type "A-12" Steel Frame and Grate	604.236 Type G1614 Steel Frame and Grates	604.238 Type G1214 Steel Frame and Grates	604.250 Type "S" Trash Rack	604.252 Type "M" Trash Rack	604.302 Removing, Cleaning, Painting and Reinstalling Type B Cast Iron Frame and Cover	604.202 Type "B" Cast Iron Frame and Cover	~~609.700 Gutter, Type 7A~~	609.702 Gutter, Type 7B	609.704 Gutter, Type 7C	~~609.706 Gutter, Type 7D~~	612.02 Grouted Rubble Slope Protection
		UNIT USED	C.Y.	C.Y.	C.Y.	C.Y.	C.Y.	C.Y.	LB.	C.Y.	L.F.	L.F.	L.F.	L.F.	L.F.	L.F.	L.F.	L.F.	L.F.	L.F.	L.F.	L.F.	L.F.	L.F.	L.F.	L.F.	Ea.	Ea.	Ea.	Ea.	Ea.	Ea.	Ea.	Ea.	Ea.	Ea	L.F.	L.F.	L.F.	L.F.	C.Y.
RAMP (RH-I)																																									
1	61214 CD1	0+00 Rt.		190		4.5			35	14														74						1										
2	61214 CD1	2+50 Rt.		225		2.5			35	41												246								1										
3	61214 CD1	4+87 Rt.		206		3.5			35	30												232								1										
4	"E" SDMH	6+70 5' 9% Rt.		278				1.5	115	30											180					4	1													
5	61214 CD1	8+15 Rt.		220		4.0			35	23											140									1										
6	"D" SDMH	11+20 27' 9% Rt.		28				1.5	35	3										16						6	1													3
7	61214 CD1	11+25 Rt.		37		2.0			35	5										34										1										
8	"U" CD1	0+25 Rt.		69		2.5			266									36														1								
RAMP (RH-O)																																									
1	61214 CD1	2+70 Lt.		109		3.0			35	16										104										1										
2	61214 CD1	6+00 Lt.		86		2.5			35	14										84										1										
3	"A-12M" CD1	9+43 Rt.		80		3.5			130	10								66										1											
4	"A-12M" CD1	11+30 Rt.		211		3.0			130	30								204										1											
5	61214 CD1	11+75 Lt.		43		2.5			35	6								40												1										

ORIGINAL PLAN
DRAWN BY
TRACED BY
DESIGNED BY
QUANTITIES BY
CHECKED BY
NOTE BOOK
No.

DRAINAGE SUMMARY

FED. ROAD DIST. NO.	STATE	FED. AID PROJ. NO.	FISCAL YEAR	SHEET NO.	TOTAL SHEETS
HAWAII	HAW.	F078(11)	1969	70	258

Revised: Oct. 16, 1970

STRUCTURES — ESTIMATED QUANTITIES

NUMBER	TYPE	STATION	206.01 Structure Excavation Other than at Bridges	206.02 Structure Excavation for Drainage System	207.01 Ditch and Channel Excavation	503.002 Concrete for Drainage System	603.0020 Class "B" Concrete or Shotcrete for Drainage Ditch	503.202 Class "B" Concrete for Drainage System	602.103 Reinforcing Steel for Drainage System	603.0010 Bed Course Material for Culvert	603.2096 66-inch Corrugated Metal Pipe No. 12 Ga.	603.6179 54-inch CMP, No. 14 Ga. or 48-inch RCP, Cl. III	603.6200 54-inch CMP, No. 10 Ga. or 48-inch RCP, Cl. III	603.6260 54-inch CMP, No. 10 Ga. or 54-inch RCP, Cl. III	603.6299 60-inch CMP, No. 12 Ga. or 54-inch RCP, Cl. III	603.6339 60-inch CMP, No. 12 Ga. or 60-inch RCP, Cl. III	603.6419 66-inch CMP, No. 12 Ga. or 66-inch RCP, Cl. III	603.7200 24" CMP, No. 14 Ga. or 24" RCP, Cl. III or 24" ACP, Cl. III	603.7220 24" CMP, No. 12 Ga. or 24" RCP, Cl. III or 24" ACP, Cl. III	603.7240 24" CMP, No. 10 Ga. or 24" RCP, Cl. III or 24" ACP, Cl. III	603.7300 30" CMP, No. 10 Ga. or 24" RCP, Cl. III or 24" ACP, Cl. III	603.7340 30" CMP, No. 12 Ga. or 30" RCP, Cl. III or 30" ACP, Cl. III	603.7360 30" CMP, No. 10 Ga. or 30" RCP, Cl. III or 30" ACP, Cl. III	603.7440 36" CMP, No. 12 Ga. or 36" RCP, Cl. III or 36" ACP, Cl. III	604.010 Brick Wall for Storm Drain Manholes	604.201 Type "A" Cast Iron Frame and Cover	~~604.245 Type C Cast Iron Frame and Grate~~	604.231 Type "A-9" Steel Frame and Grate	604.232 Type "A-12" Steel Frame and Grate	604.236 Type G1614 Steel Frame and Grates	604.238 Type G1214 Steel Frame and Grates	604.250 Type "S" Trash Rack	604.252 Type "M" Trash Rack	604.302 Removing, Cleaning, Painting and Reinstalling Type B Cast Iron Frame and Cover	604.202 Type "B" Cast Iron Frame and Cover	~~609.700 Gutter, Type 7A~~	609.702 Gutter, Type 7B	609.704 Gutter, Type 7C	~~609.706 Gutter, Type 7D~~	612.02 Grouted Rubble Slope Protection
		UNIT USED	C.Y.	C.Y.	C.Y.	C.Y.	C.Y.	C.Y.	LB.	C.Y.	L.F.	L.F.	L.F.	L.F.	L.F.	L.F.	L.F.	L.F.	L.F.	L.F.	L.F.	L.F.	L.F.	L.F.	L.F.	L.F.	L.F.	L.F.	L.F.	L.F.	L.F.	L.F.	L.F.	L.F.	L.F.	L.F.	L.F.	L.F.	L.F.	L.F.	C.Y.
NORTH FRONTAGE ROAD																																									
1	"E" SDMH	2+25 18' % Lt.		471				3.5	242	41									272							4	1														
2	"1B" CB	5+00 Lt.		479		6.0			108	58									386								1														
3	"1A" CB	8+90 Lt.		125		7.5			145	12									82								1														
4	"D" CB	9+75		104		7.5			77	13									86																1						
5	"5" CD1	10+64.5± % Lt.		264		23.0			2383	17	60																						1								
6	"T" CD1	11+00 Lt.		129		26.5			4645																		1														
7	"R" SDMH OUTLET STRUC	15+43 Lt.		669		29.0			4454	20							68										1														
SOUTH FRONTAGE ROAD																																									
1	"E" SDMH	1+00 26' % Rt.		418				1.0	65	50													296			4	1														
2	"C" CB	4+00 Rt.		605		7.5			108	63													374												1						
3	"C" CB	7+75 Rt.		686		9.0			135	77		318																							1						
4	"C" CB	11+20 Rt.		566		7.5			135	57			256																							1					
5	"C-1" SDMH	13+80 Rt.		247		5.0			206	21			100														1														
6	"E-1" SDMH	14+85 Rt.		117		8.0			2020	10				38													1														

ORIGINAL PLAN
DRAWN BY
TRACED BY
DESIGNED BY
QUANTITIES BY
CHECKED BY
NOTE BOOK
No.

SHEET No. 4 OF 34 SHEETS

FED. ROAD DIST. NO.	STATE	FED. AID PROJ. NO.	FISCAL YEAR	SHEET NO.	TOTAL SHEETS
HAWAII	HAW.	F078-1(11)	1969	71	258

Revised: Oct. 16, 1970
Apr. 15, 1971
Oct. 29, 1971

GENERAL NOTES

1. Type "B" Castiron Frames and Covers from demolished catch basins shall be removed, cleaned, painted and reinstalled.
2. Refer to the structural plans for culverts going through North and South Frontage Road retaining walls.
3. Plugging new or abandoned culverts with brick and mortar shall not be paid for separately, but shall be considered incidental to structural excavation.
4. For bottom detail of G1214 CDI's along North and South Frontage Road Retaining Wall, See Sht. no. 88.
5. The contractor shall provide adequate protection to the G1214 "M" CDI (℄ Sta. 240+65 Lt.) and G1214 "N" CDI (℄ Sta. 240+55 Rt.) prior to construction of the temporary connection.
6. Class "B" Concrete or Shotcrete option shall conform to the respective requirements of Section 503 and Section 628. Payment shall be made under Contract Item No. 603.0020.
7. Whenever gages for corrugated metal pipes or pipe-arches are called for on the plans, the equivalent thickness in inches shall be used. The equivalents are as follows:
   14 Ga. = 0.079 in. 12 Ga. = 0.109 in.
   10 Ga. = 0.138 in. 8 Ga. = 0.168 in.
8. For culverts 48" and larger, additional reinforcing around culvert openings are required as shown on sht. no. 86 unless otherwise noted.

REVISION

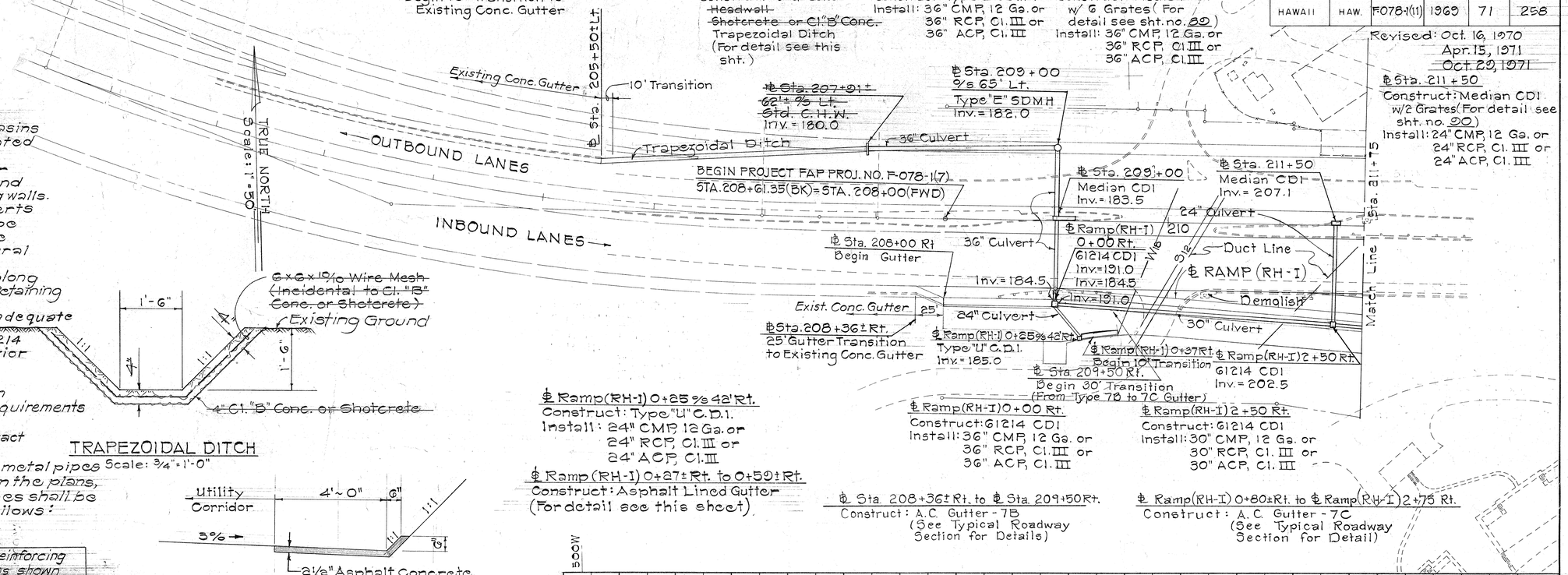

℄ Ramp (RH-I) 0+25 % 42' Rt.
Construct: Type "U" C.D.I.
Install: 24" CMP, 12 Ga. or 24" RCP, Cl. III or 24" ACP, Cl. III

℄ Ramp (RH-I) 0+37± Rt. to 0+59± Rt.
Construct: Asphalt Lined Gutter (For detail see this sheet)

℄ Ramp (RH-I) 0+00 Rt.
Construct: G1214 CDI
Install: 36" CMP, 12 Ga. or 36" RCP, Cl. III or 36" ACP, Cl. III

℄ Ramp (RH-I) 2+50 Rt.
Construct: G1214 CDI
Install: 30" CMP, 12 Ga. or 30" RCP, Cl. III or 30" ACP, Cl. III

℄ Sta. 208+36± Rt. to ℄ Sta. 209+50 Rt.
Construct: A.C. Gutter - 7B (See Typical Roadway Section for Details)

℄ Ramp (RH-I) 0+80± Rt. to ℄ Ramp (RH-I) 2+75 Rt.
Construct: A.C. Gutter - 7C (See Typical Roadway Section for Detail)

TRAPEZOIDAL DITCH

Scale: 3/4" = 1'-0"

* TYPICAL SECTION OF ASPHALT LINED GUTTER

Scale: 1/2" = 1'-0"

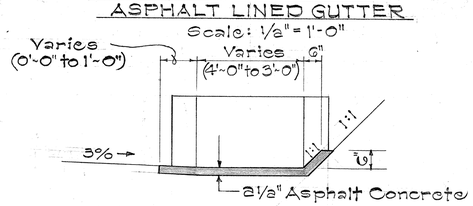

** TYPICAL SECTION OF ASPHALT LINED GUTTER TRANSITION

Scale: 1/2" = 1'-0"

* ℄ Sta. 0+59 Rt. to ℄ Sta. 0+37 Rt.
** ℄ Sta. 0+37 Rt. to ℄ Sta. 0+27 Rt.

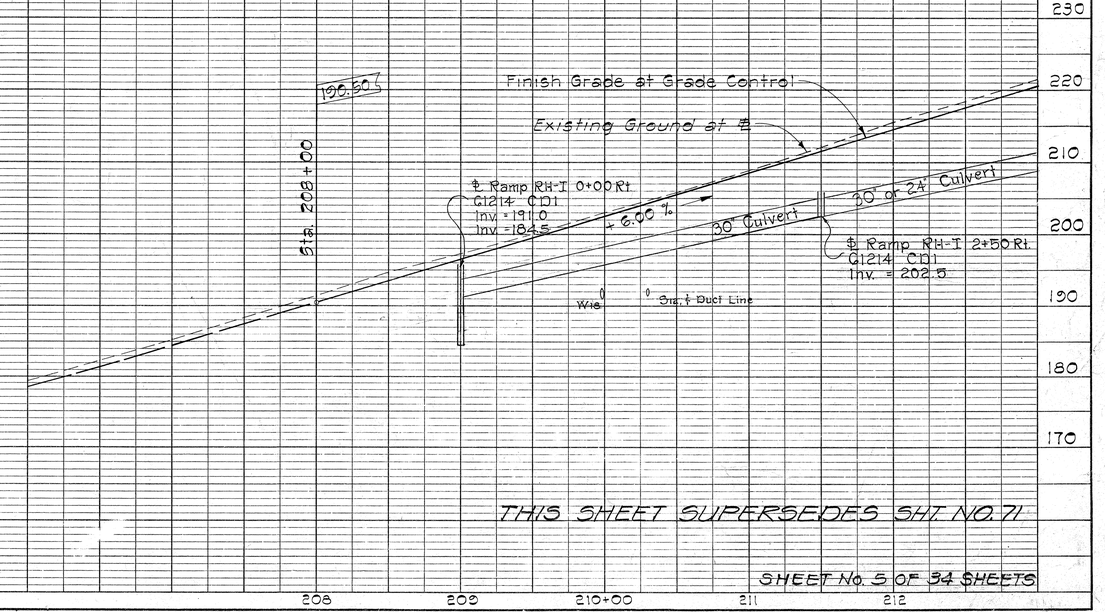

THIS SHEET SUPERSEDES SHT. NO. 71

SHEET No. 5 OF 54 SHEETS

PLAN		BY	DATE
NOTE BOOK NO.	SURVEYED / PLOTTED / ALIGNMENT CHECKED / PT. OF WAY CHECKED		

PROFILE		BY	DATE
NOTE BOOK NO.	SURVEYED / PLOTTED / GRADES CHECKED / S.P. NOTED / STRUCTURE DATA TKS CHKD.		

K+E PLATE 1, PLAN-PROFILE KEUFFEL & ESSER CO.

48 7012 IMPERIAL™ TRACING CLOTH

71R

FED. ROAD DIST. NO.	STATE	FED. AID PROJ. NO.	FISCAL YEAR	SHEET NO.	TOTAL SHEETS
HAWAII	HAW.	F078-1(11)	1969	72	258

Revised: Oct. 16, 1970

℄ Ramp(RH-O)1+84± Lt. to ℄ Ramp(RH-O)13+00± Lt.
Construct: A.C. Gutter (See Typical Roadway Section for details) - Type 7B

℄ Sta. 214+00
Construct: Median CDI with 2 Grates (For detail see sht. no. 90)
Install: 24" CMP, 10 Ga. or 24" RCP, Cl. III or 24" ACP, Cl. III

℄ Sta. 217+62
Construct: Median CDI with 2 Grates (For detail see sht. no. 90)
Install: 24" CMP, 10 Ga. or 24" RCP, Cl. III or 24" ACP, Cl. III

℄ Sta. 220+95
Construct: Median CDI with 1 Grate (For detail see sht. no. 90)
Install: 24" CMP, 10 Ga. or 24" RCP, Cl. III or 24" ACP, Cl. III

℄ Ramp(RH-O) 6+00 Lt.
Construct: G1214 CDI
Install: 24" CMP, 10 Ga. or 24" RCP, Cl. III or 24" ACP, Cl. III

℄ Ramp (RH-O) 9+43 Rt.
Construct: Type "A-12M" CDI (For detail see Sht. No. 85)
Install: 24" CMP, 12 Ga. or 24" RCP, Cl. III or 24" ACP, Cl. III

℄ Ramp(RH-O)11+50 Rt.
Construct: Type A-12 CDI
Install: 24" CMP, 12 Ga. or 24" RCP, Cl. III or 24" ACP, Cl. III

℄ Ramp(RH-O)11+75 Lt.
Construct: G1214 CDI
Install: 24" CMP, 12 Ga. or 24" RCP, Cl. III or 24" ACP, Cl. III

℄ Ramp(RH-O)11+75 Lt.
G1214 CDI
Inv. = 262.5

℄ Sta. 225+00 Lt. to ℄ Sta. 227+00 Lt.
Construct: A.C. Gutter (See Typical Roadway Section for details) - Type 7B

℄ Sta. 226+50 Lt.
Construct: G1214 CDI
Install: 24" CMP, 10 Ga. or 24" RCP, Cl. III or 24" ACP, Cl. III

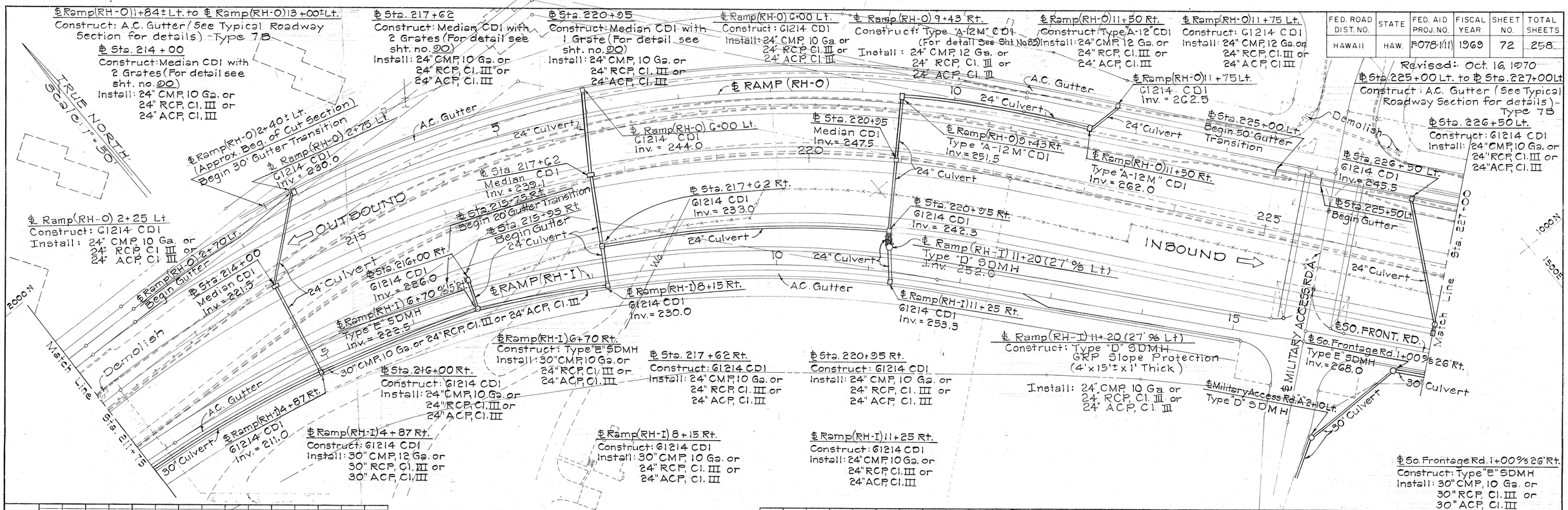

℄ Ramp(RH-I) 2+75 Rt. to ℄ Ramp(RH-I) 12+70± Rt.
Construct: A.C. Gutter, Type 7C (See Typical Roadway Section for details)

℄ Sta. 215+75± Rt. to ℄ Sta. 227+00 Rt.
Construct: A.C. Gutter, Type 7D (See Typical Roadway Section for details)

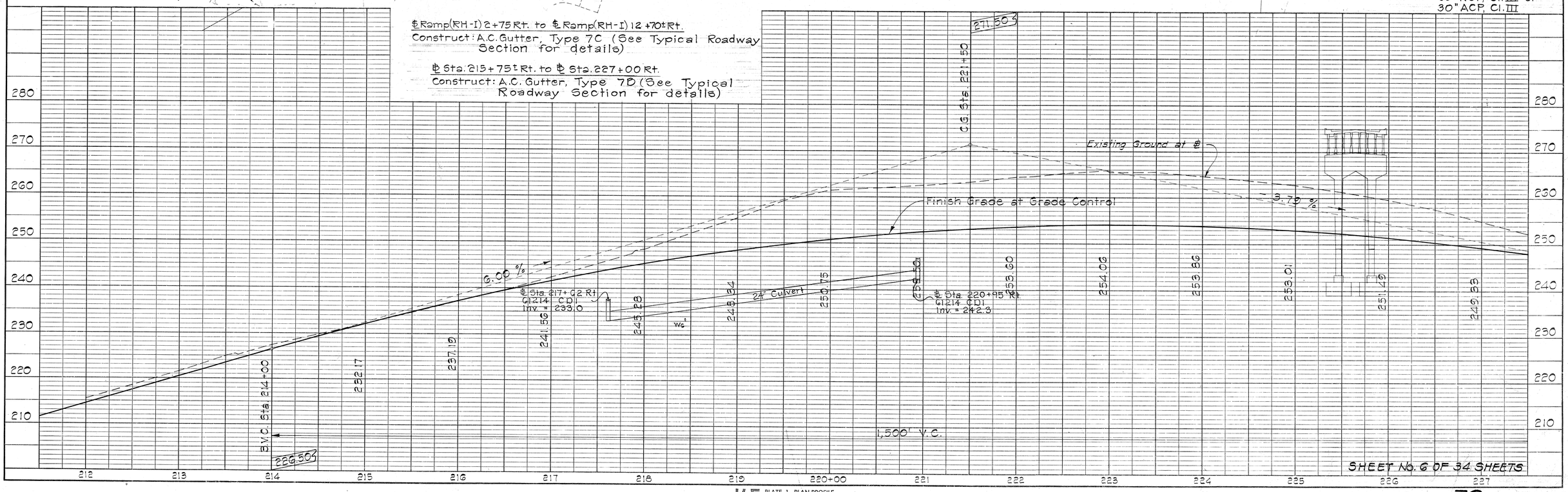

SHEET No. 6 OF 34 SHEETS

PLAN — SURVEYED, PLOTTED, ALIGNMENT CHECKED, RT. OF WAY CHECKED, NOTE BOOK, NO., BY, DATE

PROFILE — SURVEYED, PLOTTED, GRADES CHECKED, B. M. & NOTES, STRUCTURE NOTATIONS CHKD, NOTE BOOK, NO., BY, DATE

K+E PLATE 1, PLAN-PROFILE KEUFFEL & ESSER CO.

48 7012 IMPERIAL™ TRACING CLOTH

FED. ROAD DIST. NO.	STATE	FED. AID PROJ. NO.	FISCAL YEAR	SHEET NO.	TOTAL SHEETS
HAWAII	HAW.	F-078-1(11)	1969	73	258

Revised: Apr. 15, 1971
Oct. 29, 1971

℄ North Frontage Rd. 5+00 Lt.
Construct: Type "1B" CB
Install: 24" CMP, 12 Ga. or
24" RCP, Cl. III or
24" ACP, Cl. III

℄ Sta. 230+91 Lt.
Construct: 61214 CDI
Install: 24" CMP, 12 Ga. or
24" RCP, Cl. III or
24" ACP, Cl. III

℄ North Frontage Rd. 8+90 Lt.
Construct: Type "1A" C.B.
Install: 24" CMP, 12 Ga. or
24" RCP, Cl. III or
24" ACP, Cl. III

℄ N.F.R. 9+75 Lt.
Type "D" C.B.
Inv. = 221.0

℄ N.F.R. 10+64.5± %s 42' Lt.
Type "5" CDI (For detail See Sht. no. 82)
Inv. = 204.25
Conn. Inv. = 203.0

℄ N.F.R. 11+00
Construct: Type "T" SDMH
(For detail see sht. no. 83)

℄ No. Frontage Rd. 9+75 Lt.
Construct: Type "D" C.B.
Install: 24" CMP, 12 Ga. or
24" RCP, Cl. III or
24" ACP, Cl. III

℄ North Frontage Rd. 5+00 Lt.
Type "1B" CB
Inv. = 254.5

℄ North Frontage Rd. 8+90 Lt.
Type "1A" CB
Inv. = 226.0

24" Culvert — SMH — 24" Culvert — SMH — 24" Culvert — SMH — Demolish — Inv. = 203.75 — 66" CMP, 12 Ga. — 60" Culvert

Match to exist. Trap. Ditch
New Trap. Ditch-Transition Ditch to Inlet Structure
Existing 48" Culverts to remain

℄ NORTH FRONTAGE ROAD

TRUE NORTH
Scale: 1" = 50'

Sta. 227+00 — Match Line — Sta. 241+00

℄ N.F.R. Sta. 2+25
(See Sht. 77 for notes)
Type ℄ SDMH
Inv. = 250.5

℄ Sta. 230+91 Lt.
61214 CDI
Inv. = 229.7

℄ Sta. 236+00 Lt.
61214 CDI
Inv. = 210.2

℄ North Frontage Road Sta. 11+00
Type "T" SDMH
Inv. = 199.6

℄ Sta. 240+65 Lt.
61214 "M" CDI
Inv. = 188.0

← OUTBOUND

230 — 235 — 240

24" Culvert — 24" Culvert — 60" Culvert

℄ Sta. 227+00 %s 5'
From Rt. E.P.
Type "D" SDMH
Inv. = 242.7

Demolish

℄ Sta. 231+50 %s 5'
From Rt. E.P.
Type "D" SDMH
Inv. = 227.2

INBOUND →

℄ Sta. 236+10 %s 5'
From Rt. E.P.
Type "D" SDMH
Inv. = 208.5

℄ Sta. 240+55 %s 5'
From Rt. E.P.
Type "D-1" SDMH
Inv. = 189.0

Motor Duct Lines

℄ Sta. 227+00 %s 5'
From Rt. E.P.
Construct: Type "D" SDMH
Install: 24" CMP, 10 Ga.
24" RCP, Cl. III
24" ACP, Cl. III

24" Culvert — 24" Culvert — 24" Culvert

℄ Sta. 227+00 Rt.
61214 CDI
Inv. = 243.2

℄ Sta. 231+50 Rt.
61214 CDI
Inv. = 227.7

℄ Sta. 236+10 Rt.
61214 CDI
Inv. = 208.0

℄ So. Front. Rd. 13+80 Rt.
Type "C-1" SDMH
Inv. = 196.7

℄ Sta. 240+55 Rt.
61214 "N" CDI
Inv. = 189.5

54" Culvert

℄ Sta. 227+00 Rt.
Construct: 61214 CDI
Install: 24" CMP, 10 Ga.
24" RCP, Cl. III
24" ACP, Cl. III

℄ SOUTH FRONTAGE ROAD

54" CMP, 14 Ga. or 48" RCP, Cl. III

30" Culvert

For detail see sht. no. 138

℄ So. Front. Rd. 14+85 Rt.
Type "E-1" SDMH
Inv. = 190.5

℄ South Frontage Rd. 4+00 Rt.
Type "C" CB
Inv. = 255.0

℄ South Frontage Rd. 7+75 Rt.
Type "C" C.B.
Inv. = 232.0

℄ Sta. 236+10 %s 5'
From Rt. E.P.
Construct: Type "D" SDMH
Install: 24" CMP, 12 Ga. or
24" RCP, Cl. III or
24" ACP, Cl. III

℄ South Frontage Rd. 11+20 Rt.
Type "C" CB
Inv. = 212.0

54" CMP, 10 Ga. or 48" RCP, Cl. III

℄ Sta. 240+55 %s 5'
From Rt. E.P.
Construct: Type "D-1" SDMH
(For detail see sht. no. 86)
Install: 60" CMP, 12 Ga. or
60" RCP, Cl. III

℄ South Frontage Rd. 4+00 Rt.
Construct: Type "C" CB
Install: 30" CMP, 10 Ga. or
30" RCP, Cl. III or
30" ACP, Cl. III

℄ Sta. 231+50 %s 5'
From Rt. E.P.
Construct: Type "D" SDMH
Install: 24" CMP, 14 Ga. or
24" RCP, Cl. III or
24" ACP, Cl. III

℄ South Frontage Rd. 7+75 Rt
Construct: Type "C" C.B.
Install: 54" CMP, 14 Ga. or
48" RCP, Cl. III

℄ Sta. 236+00 Lt.
Construct: 61214 CDI
Install: 24" CMP, 12 Ga. or
24" RCP, Cl. III or
24" ACP, Cl. III

℄ Sta. 236+10 Rt.
Construct: 61214 CDI
Install: 24" CMP, 12 Ga. or
24" RCP, Cl. III or
24" ACP, Cl. III

℄ South Frontage Rd. 13+80 Rt.
Construct: Type "C-1" SDMH
Install: 54" CMP, 10 Ga. or
48" RCP, Cl. III

℄ Sta. 240+55 Rt.
Construct: 61214 "N" CDI
(For detail see sht. no. 87)
Install: 54" CMP, 10 Ga. or
54" RCP, Cl. III

℄ Sta. 227+00 Lt. to ℄ Sta. 236+00 Lt.
Construct: AC Gutter-Type 7B
(See Typical Roadway Section for details)

REVISION

℄ Sta. 227+00 Rt. to ℄ Sta. 236+00 Rt.
Construct: AC Gutter-7B (See Typical Roadway Section for details)

℄ Sta. 231+50 Rt.
Construct: 61214 CDI
Install: 24" CMP, 12 Ga. or
24" RCP, Cl. III or
24" ACP, Cl. III

℄ South Frontage Rd. 11+20 Rt.
Construct: Type "C" CB
Install: 54" CMP, 10 Ga. or
48" RCP, Cl. III

℄ South Frontage Rd. 14+85 Rt.
Construct: Type "E-1" SDMH
(For detail see sht. no. 86)
Install: 54" CMP, 10 Ga. or
54" RCP, Cl. III

℄ Sta. 240+55 Rt.
Construct: 61214 "N" CDI
(For detail see sht. no. 87)
Install: 54" CMP, 10 Ga. or
54" RCP, Cl. III

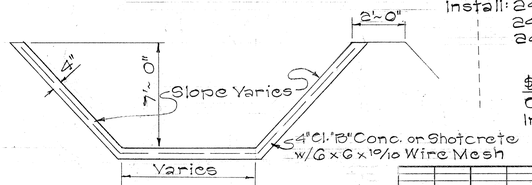

DETAIL OF DITCH FOR 15' TRANSITION AT N.F.R. STA. 10+64.5
NOT TO SCALE

℄ Sta. 240+65 Lt.
Construct: 61214 "M" CDI
(For detail see sht. no. 88)
Install: 60" CMP, 12 Ga. or
60" RCP, Cl. III

PLAN
SURVEYED ____ DATE
PLOTTED ____ BY
ALIGNMENT CHECKED
RT. OF WAY CHECKED
NOTE BOOK ____
NO. ____

PROFILE
SURVEYED ____ DATE
PLOTTED ____ BY
GRADES CHECKED
B. M. & NOTED
STRUCTURE NOTATIONS CH'KD
NOTE BOOK ____
NO. ____

260 — 250 — 240 — 230 — 220 — 210 — 200 — 190

251.42 — 249.33 — 246.52 — E.V.C. Sta. 229+00

Finish Grade at Grade Control

1,500' VC

243.06

-3.79 %

Existing Ground at ℄

THIS SHEET SUPERSEDES SHT. NO. 73

SHEET No. 7 OF 34 SHEETS

227 — 228 — 229 — 230+00 — 231 — 232 — 233 — 234 — 235 — 236 — 237 — 238 — 239 — 240+00 — 241

K+E PLATE 1, PLAN-PROFILE
KEUFFEL & ESSER CO.

48 7012 IMPERIAL™ TRACING CLOTH

73R

FED. ROAD DIST. NO.	STATE	FED. AID PROJ. NO.	FISCAL YEAR	SHEET NO.	TOTAL SHEETS
HAWAII	HAW.	F-078-1(11)	1969	74	258

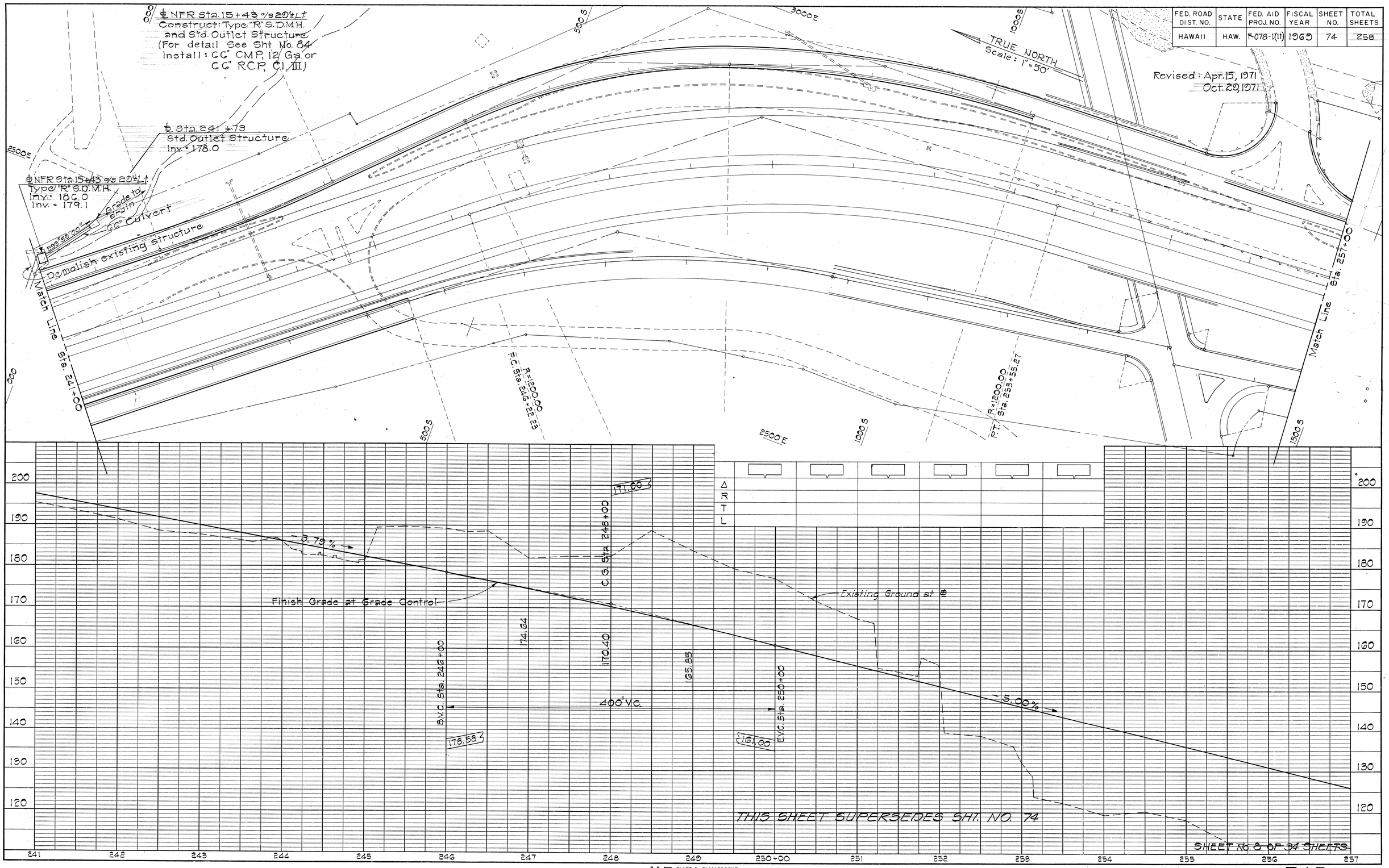

PLAN
NOTE BOOK NO.
SURVEYED.
PLOTTED.
ALIGNMENT CHECKED.
REV. OF INV. CHECKED.
BY
DATE

PROFILE
NOTE BOOK NO.
SURVEYED.
PLOTTED.
GRADES CHECKED.
B.M.'S NOTED.
STRUCTURE NOTATIONS CH'KD.
BY
DATE

K+E PLATE 1, PLAN-PROFILE
KEUFFEL & ESSER CO.

48 7012 IMPERIAL™ TRACING CLOTH 20x60

74R

FED. ROAD DIST. NO.	STATE	FED. AID PROJ. NO.	FISCAL YEAR	SHEET NO.	TOTAL
HAWAII	HAW.	F-078-1(11)	1969	75	258

Revised: Oct 16, 1970
Apr. 15, 1971
Oct. 29, 1971

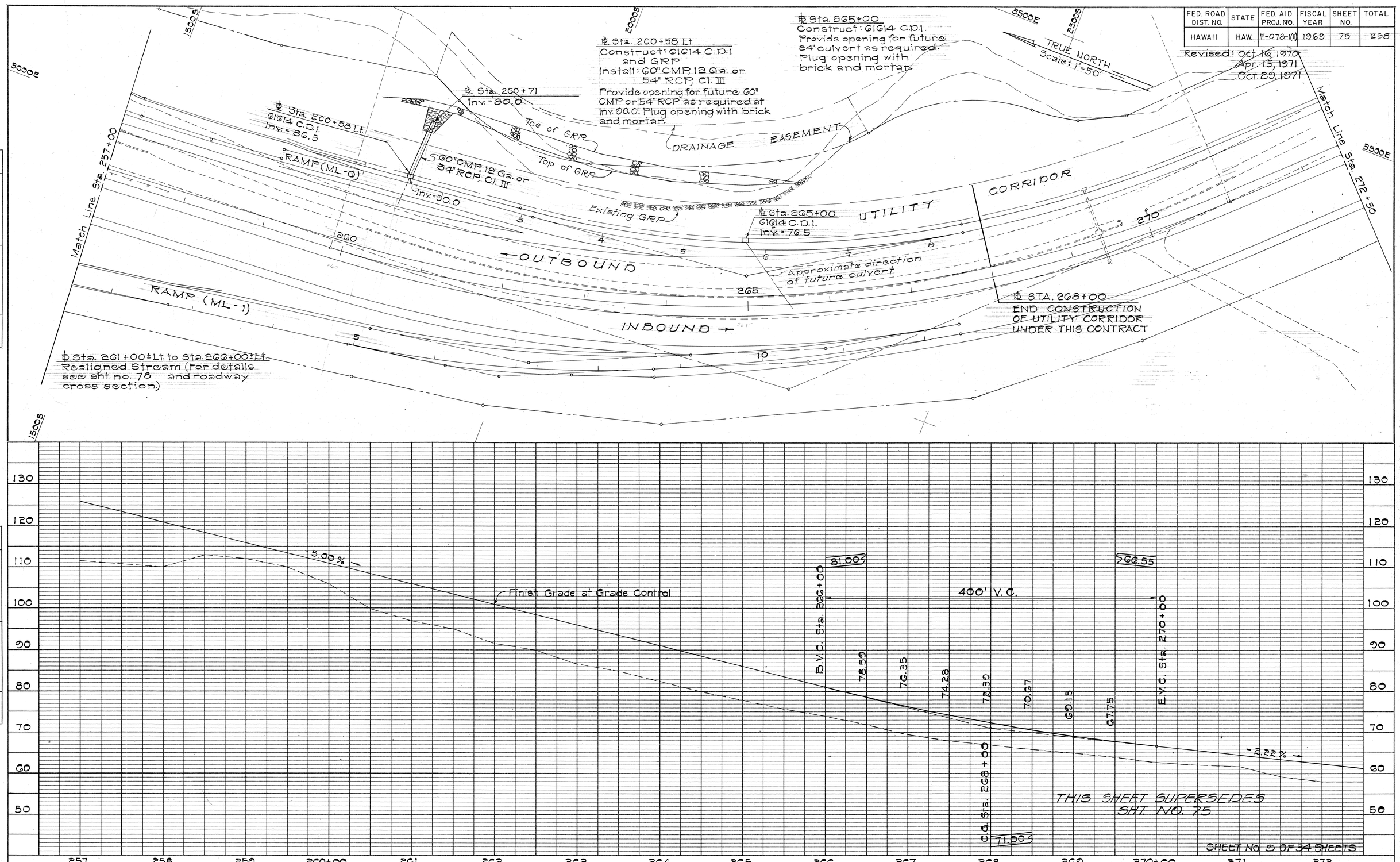

PLAN
SURVEYED
PLOTTED
ALIGNMENT CHECKED
INV. BY MAT. CHECKED
NOTE BOOK
NO.
BY
DATE

PROFILE
SURVEYED
PLOTTED
GRADES CHECKED
BY MAT. CHECKED
STRUCTURE NOTAT'NS CH'KD.
NOTE BOOK
NO.
BY
DATE

PLATE I—PLAN PROFILE B. P. R. STANDARD
THE FREDERICK POST CO., CHICAGO

FED. ROAD DIST. NO.	STATE	FED. AID PROJ. NO.	FISCAL YEAR	SHEET NO.	TOTAL SHEETS
HAWAII	HAW.	F-078-1(11)	1969	77	258

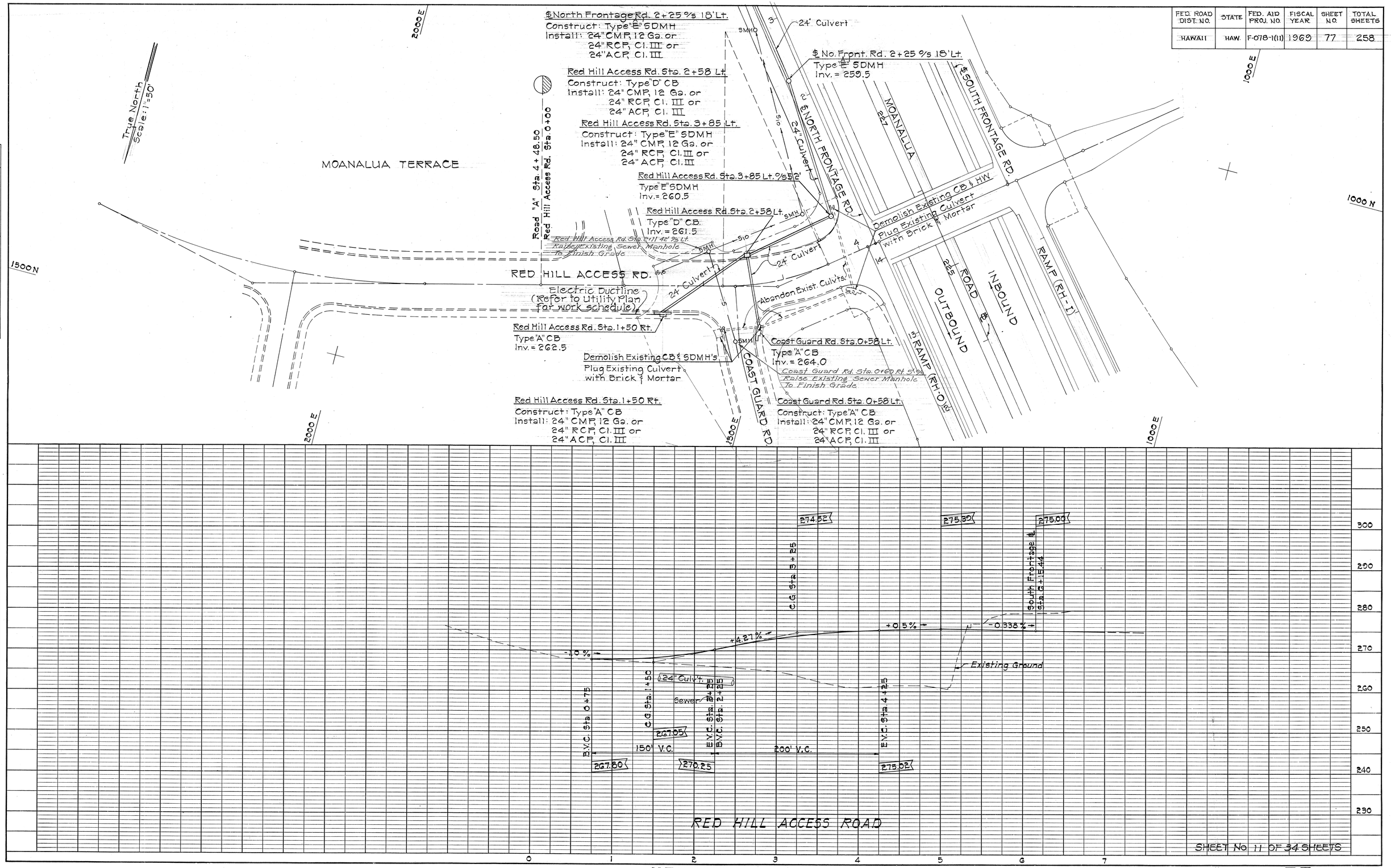

K+E PLATE 1, PLAN-PROFILE
KEUFFEL & ESSER CO.

48 7012 IMPERIAL™ TRACING CLOTH 26960

FED. ROAD DIST. NO.	STATE	FED. AID PROJ. NO.	FISCAL YEAR	SHEET NO.	TOTAL SHEETS
HAWAII	HAW.	F-078-1(11)	1969	78	258

Revised: Apr. 15, 1971
Sept. 21, 1971

NOTE:

1. For Typical GRP section, see this sheet.
2. Refer to roadway cross section sheets for stream cross sections.
3. Elevations shown are finish elevations of Top of GRP and inverts at the bottom of the stream.
4. Installing Split Duct in concrete jacket shall be paid under item No. 630.1241 installing one 4-inch Plastic Duct in plain concrete jacket.

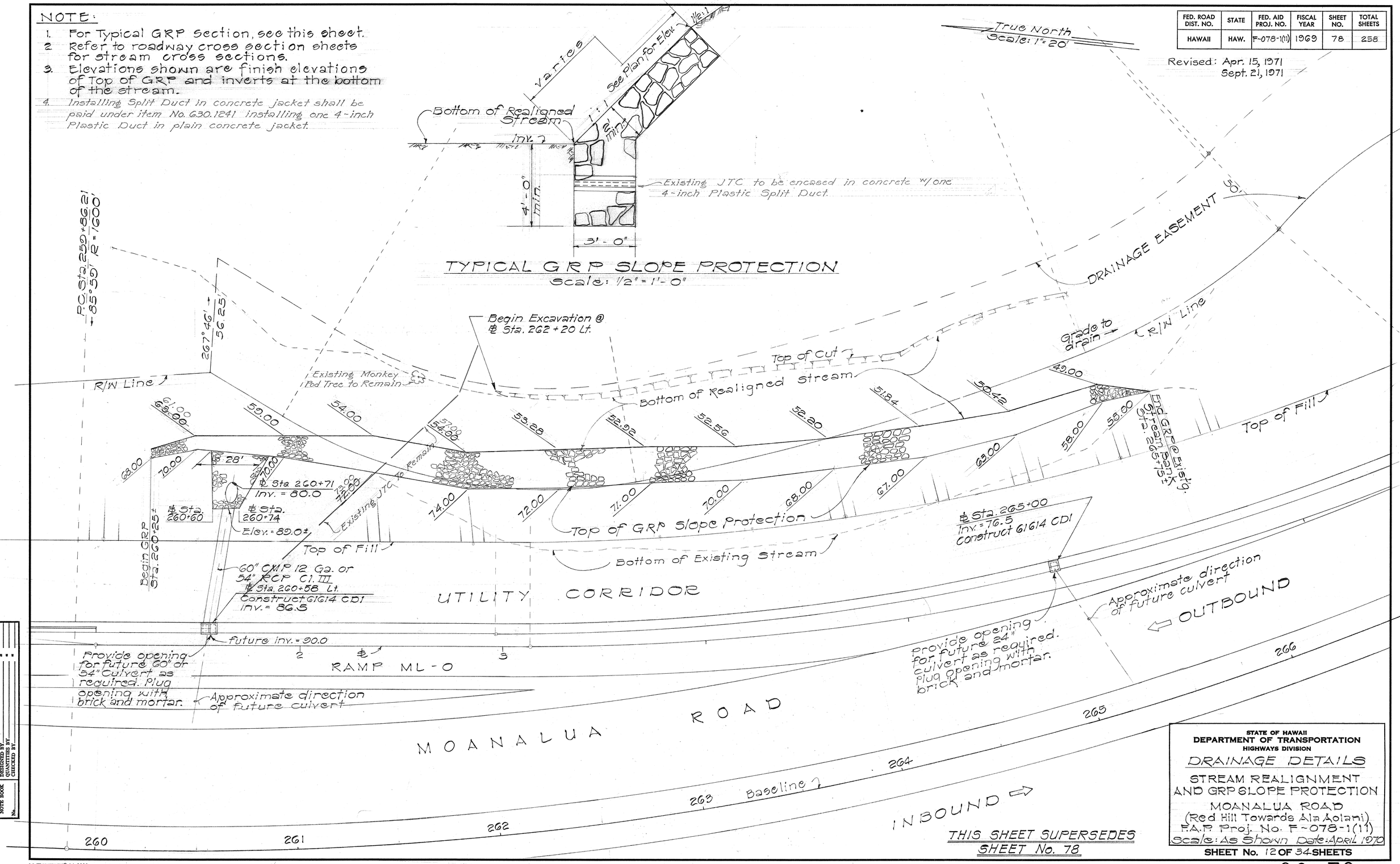

STATE OF HAWAII
DEPARTMENT OF TRANSPORTATION
HIGHWAYS DIVISION

DRAINAGE DETAILS

STREAM REALIGNMENT AND GRP SLOPE PROTECTION

MOANALUA ROAD
(Red Hill Towards Ala Aolani)
F.A.P. Proj. No. F-078-1(11)
Scale: As Shown Date: April 1970

SHEET No. 12 OF 34 SHEETS

THIS SHEET SUPERSEDES SHEET No. 78

ORIGINAL PLAN	SURVEY PLOTTED BY	DRAWN BY	TRACED BY	DESIGNED BY	QUANTITIES BY	CHECKED BY	DATE
NOTE BOOK							
No.							

K+E CRYSTALENE® LA 2920 TRACING PAPER

CO 78

FED. ROAD DIST. NO.	STATE	FED. AID PROJ. NO.	FISCAL YEAR	SHEET NO.	TOTAL SHEETS
HAWAII	HAW.	F-078(11)	1969	82	258

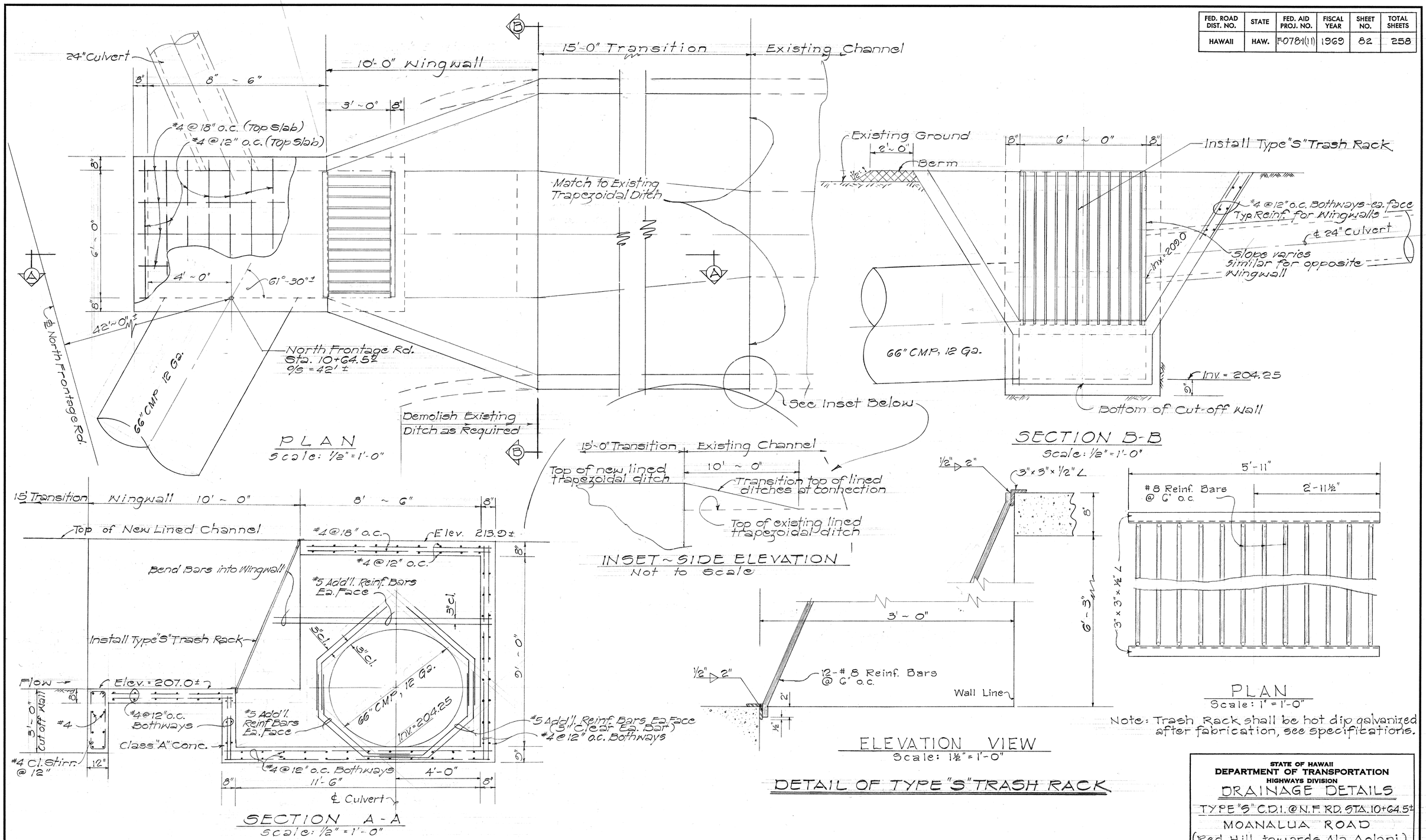

ORIGINAL PLAN	SURVEY PLOTTED BY	DATE
	DRAWN BY	
	TRACED BY	
NOTE BOOK	DESIGNED BY	
	QUANTITIES BY	
No.	CHECKED BY	

STATE OF HAWAII
DEPARTMENT OF TRANSPORTATION
HIGHWAYS DIVISION

DRAINAGE DETAILS

TYPE "S" C.D.I. @ N.F. RD. STA. 10+64.5±

MOANALUA ROAD
(Red Hill towards Ala Aolani)

F.A.P. Proj. No. F-078-1(11)

Scale: As Shown Date: April, 1970

SHEET No. 16 OF 34 SHEETS

K+E CRYSTALENE LA 2920 TRACING PAPER

FED. ROAD DIST. NO.	STATE	FED. AID PROJ. NO.	FISCAL YEAR	SHEET NO.	TOTAL SHEETS
HAWAII	HAW.	F078-1(11)	1969	83	258

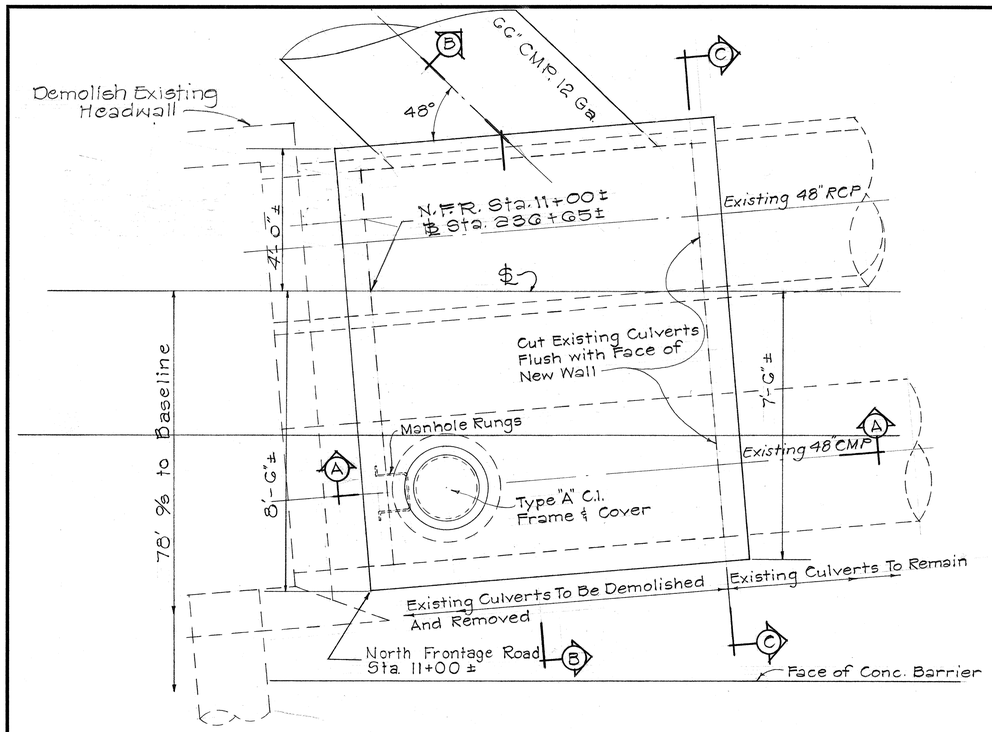

PLAN

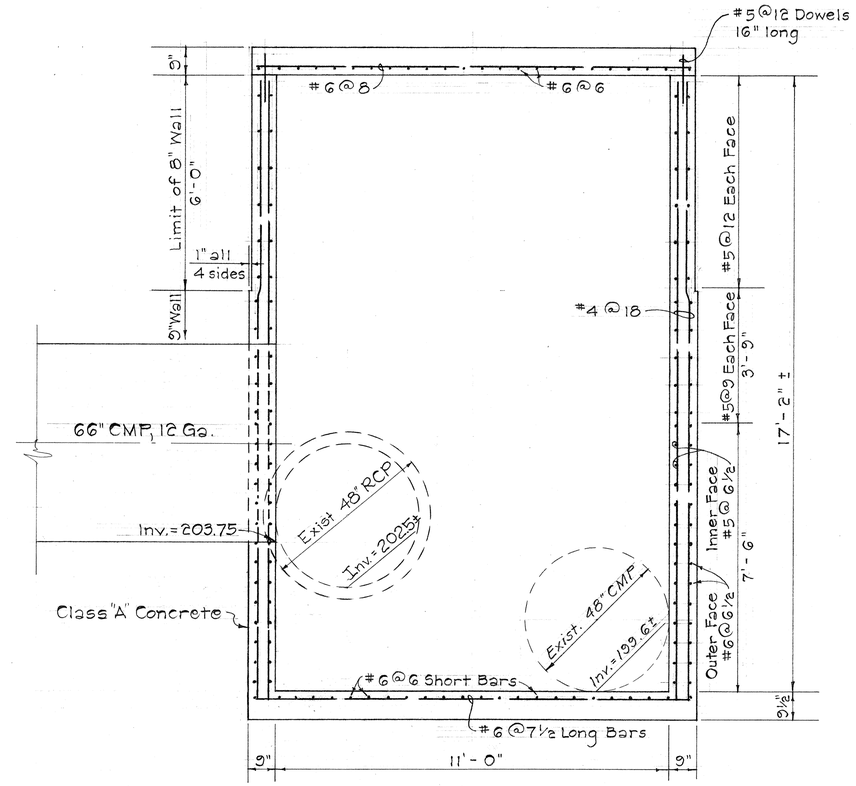

SECTION "B-B"

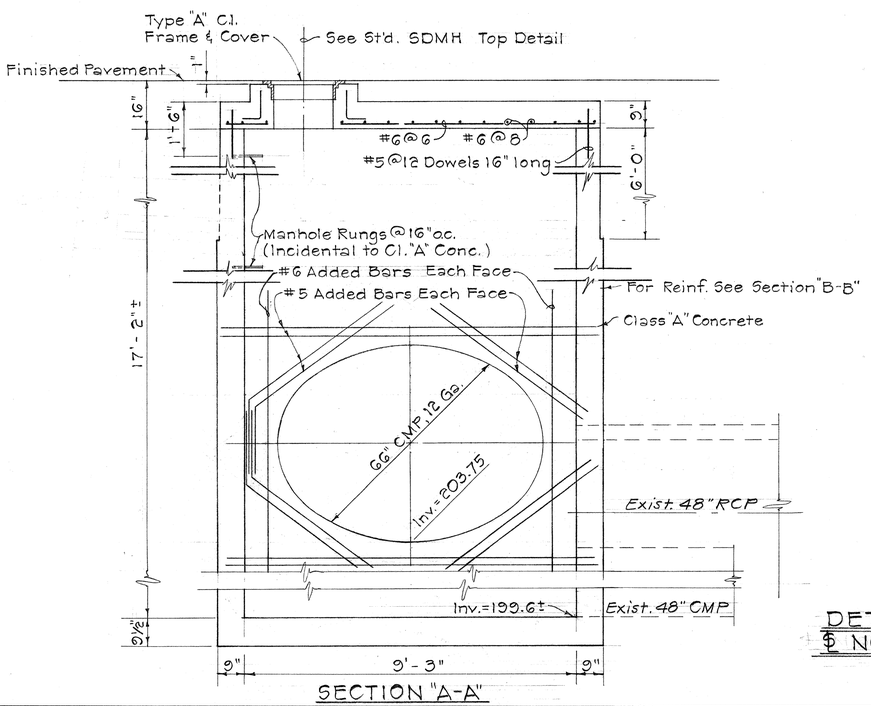

SECTION "A-A"

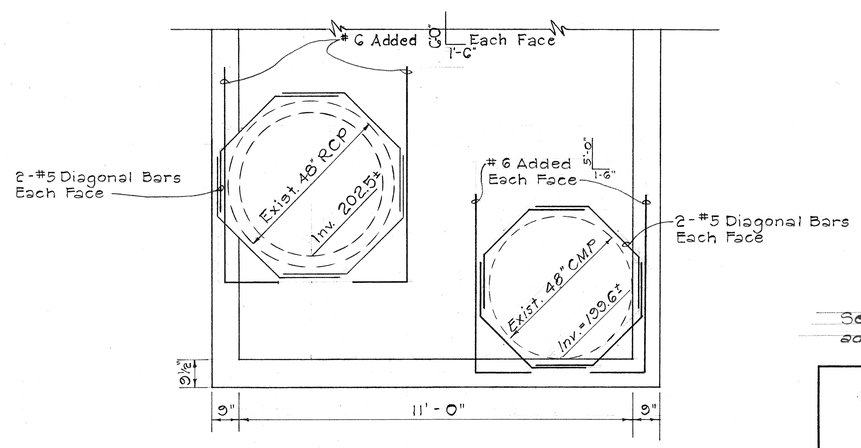

SECTION "C-C"

DETAILS OF TYPE "T" SDMH @ ℄ NORTH FRONTAGE ROAD 11+00±

Scale: ½" = 1'-0"

See page C.O. 225 S-1 for additional detail.

STATE OF HAWAII
DEPARTMENT OF TRANSPORTATION
HIGHWAYS DIVISION

DRAINAGE DETAILS

MOANALUA ROAD
(Red Hill Towards Ala Aolani)

F.A.P. Proj. No. F-078-1(11)

Scale: As Shown Date: April 1970

SHEET No. 17 OF 34 SHEETS

ORIGINAL PLAN	SURVEY PLOTTED BY	DATE
	DRAWN BY	" "
	TRACED BY	" "
NOTE BOOK	DESIGNED BY	" "
	QUANTITIES BY	" "
No.	CHECKED BY	" "

K+E CRYSTALENE® LA 2920 TRACING PAPER

FED. ROAD DIST. NO.	STATE	FED. AID PROJ. NO.	FISCAL YEAR	SHEET NO.	TOTAL SHEETS
HAWAII	HAW.	F078-1(11)	1969	84	258

Revised: Oct. 16, 1970

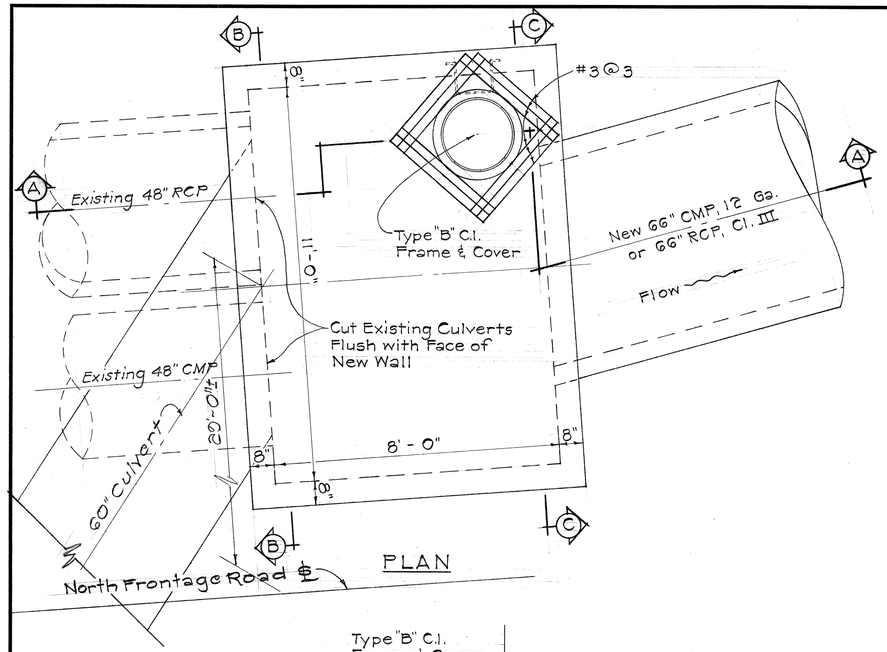

PLAN

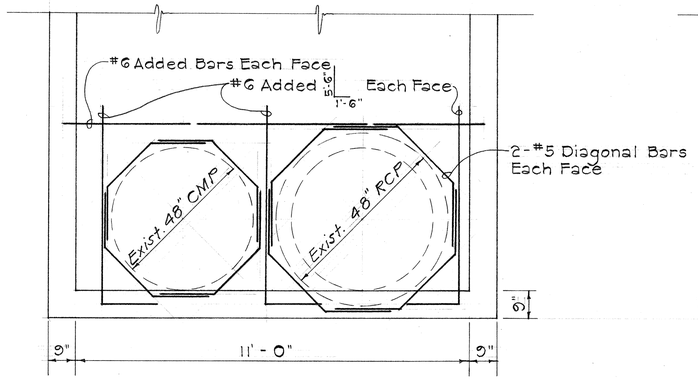

SECTION "B-B"

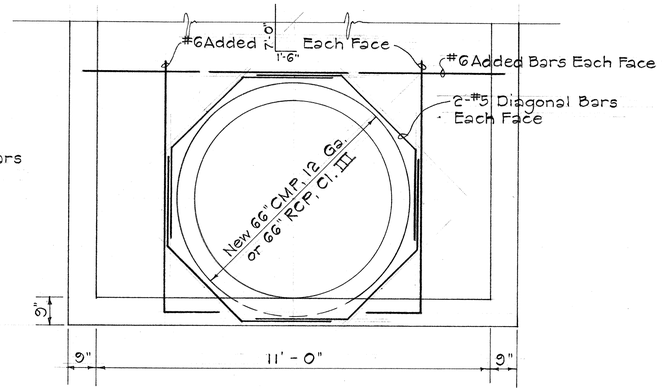

SECTION "C-C"

ADDITIONAL REINFORCEMENT AROUND CULVERT OPENINGS
(Lower Portion of SDMH - For Normal Reinf. See Section "A-A")

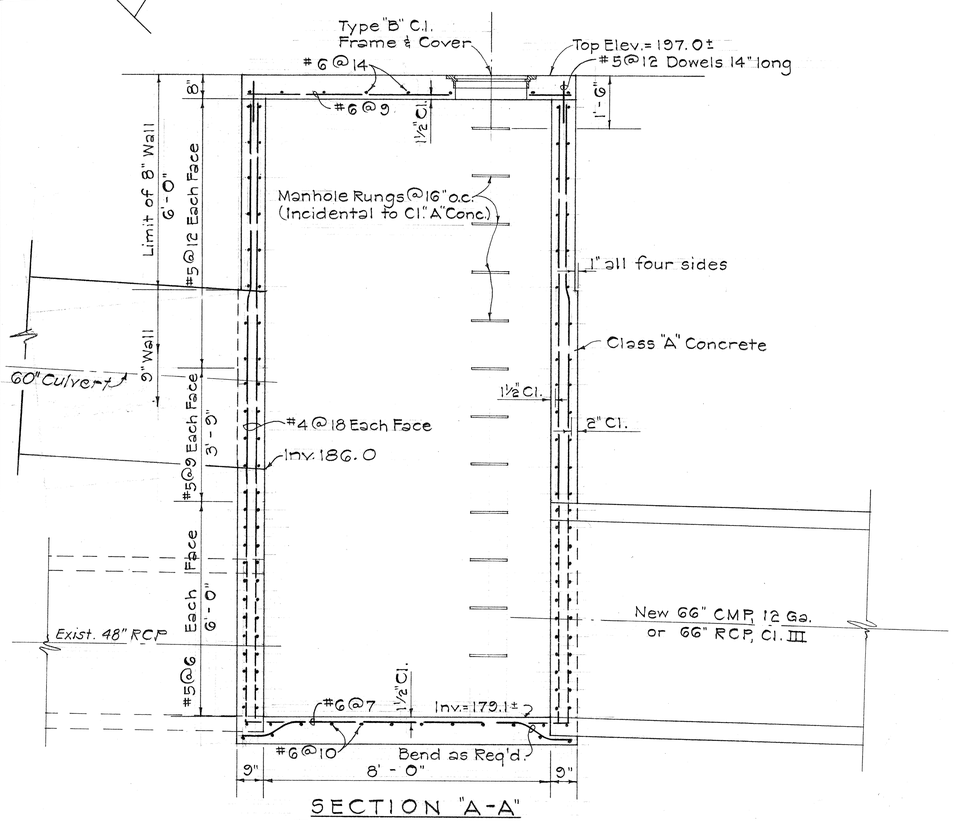

SECTION "A-A"

DETAIL OF TYPE "R" S.D.M.H. AT ℄ N.F.R. STA. 15+43 °/s 29'± LT.
Scale: 1/2" = 1'-0"

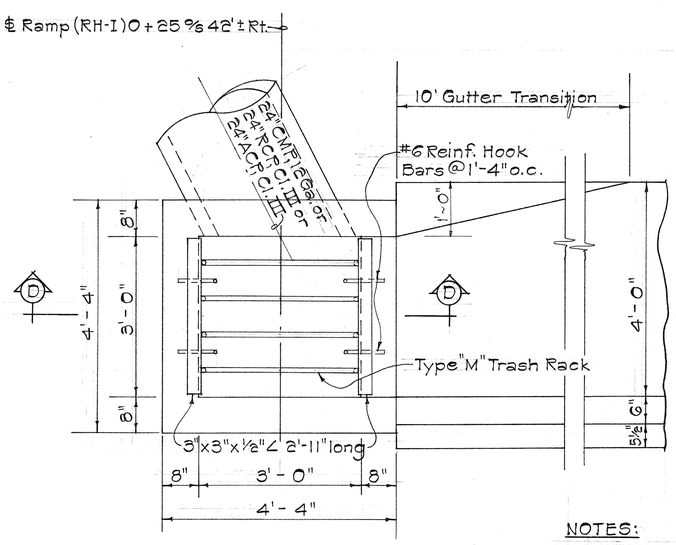

PLAN

DETAIL OF TYPE "U" CDI @ ℄ RAMP (RH-I) 0+25 °/s 42' ± Rt.
Scale: 3/4" = 1'-0"

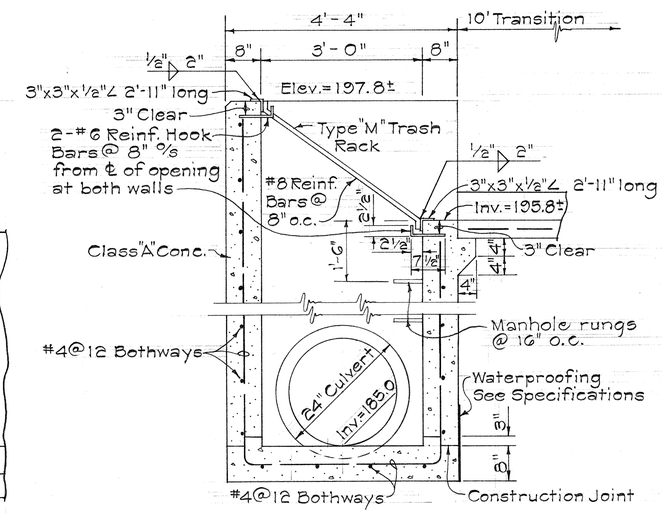

SECTION "D-D"

NOTES:

1. Provide construction joint as shown for C.D.I. if not formed monolithically.
2. Payment for #6 reinforcing hooks & manhole rungs will be considered incidental to the Class "A" Concrete.
3. Payment for asphalt lined gutter will be paid under item 609.704, Type "7C" Gutter.

STATE OF HAWAII
DEPARTMENT OF TRANSPORTATION
HIGHWAYS DIVISION

DRAINAGE DETAILS

MOANALUA ROAD
(Red Hill Towards Ala Aolani)

F.A.P. Proj. No. F-078-1(11)

Scale: As Shown Date: April 1970

SHEET No. 18 OF 34 SHEETS

ORIGINAL PLAN	SURVEY PLOTTED BY	DATE
	DRAWN BY	"
	TRACED BY	"
	DESIGNED BY	"
NOTE BOOK	QUANTITIES BY	"
No.	CHECKED BY	"

K+E CRYSTALENE® LA 2920 TRACING PAPER

FED. ROAD DIST. NO.	STATE	FED. AID PROJ. NO.	FISCAL YEAR	SHEET NO.	TOTAL SHEETS
HAWAII	HAW.	F078-1(11)	1969	85	258

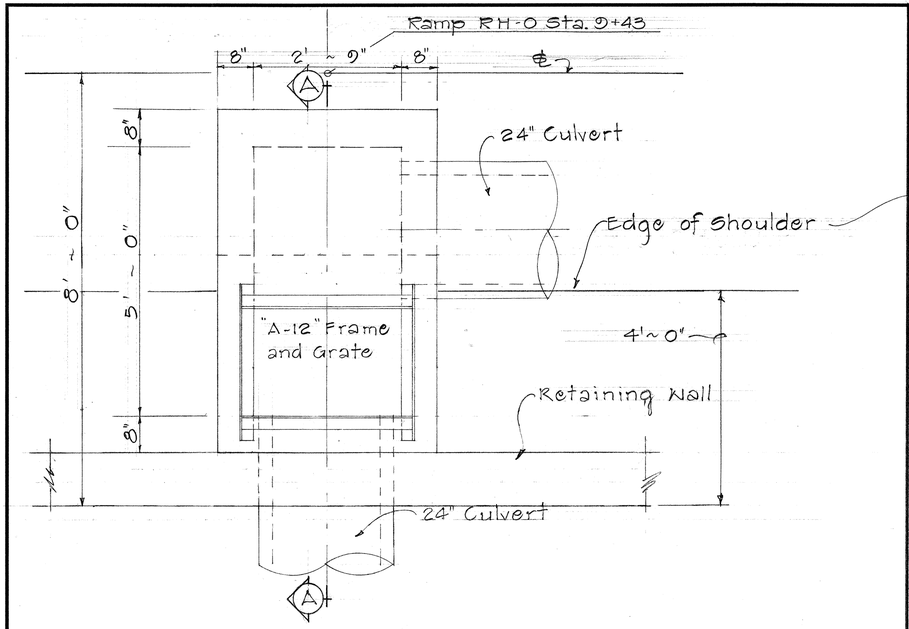

PLAN

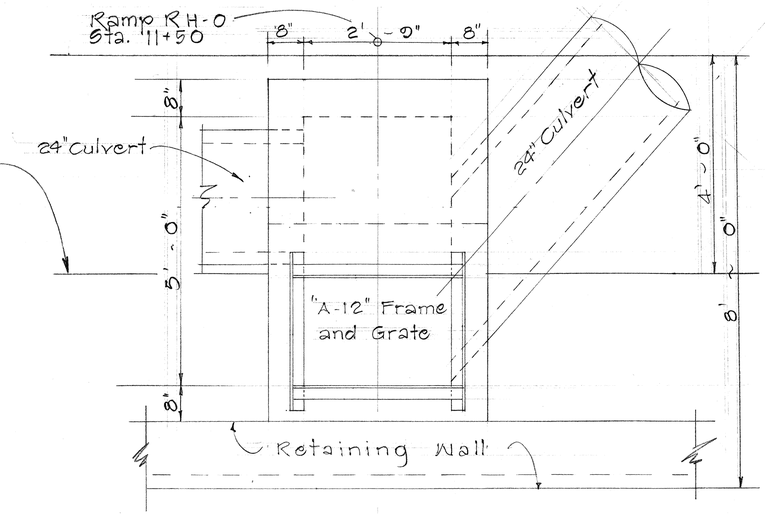

PLAN

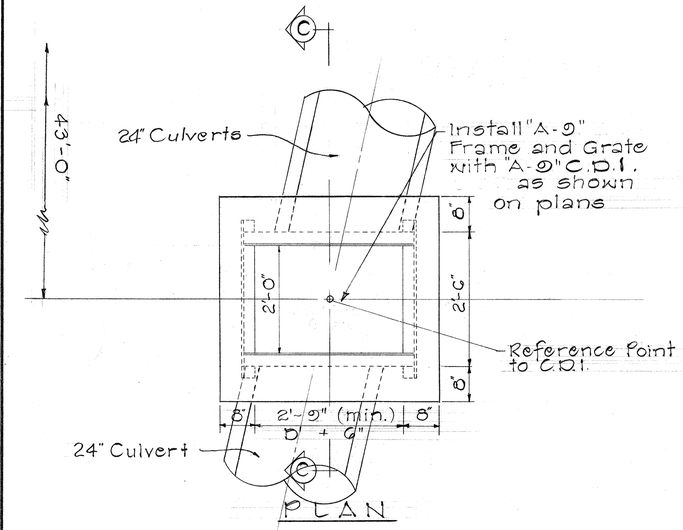

PLAN

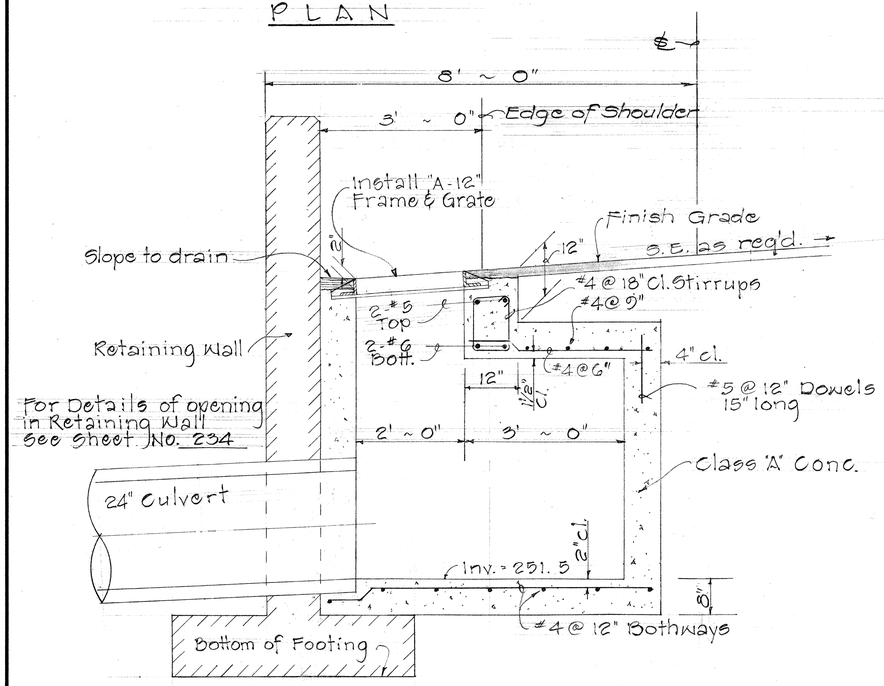

SECTION A-A

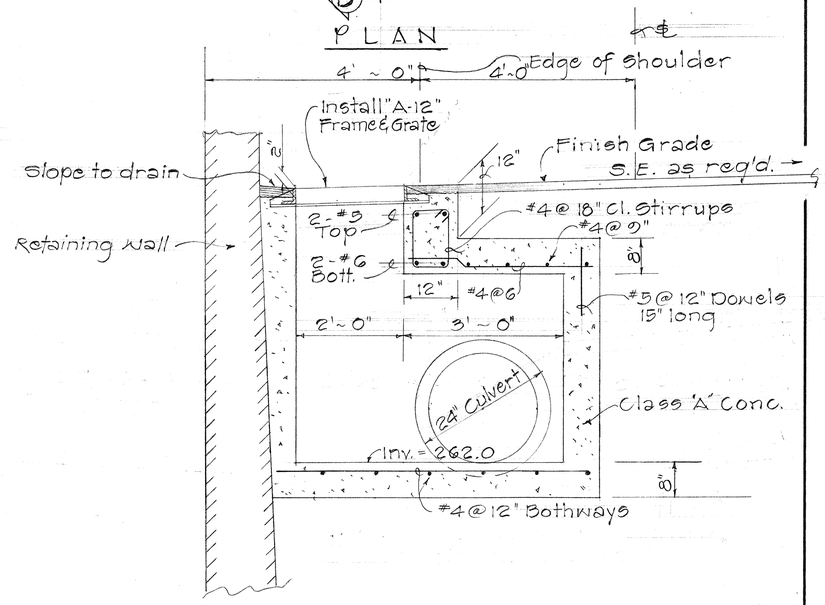

SECTION B-B

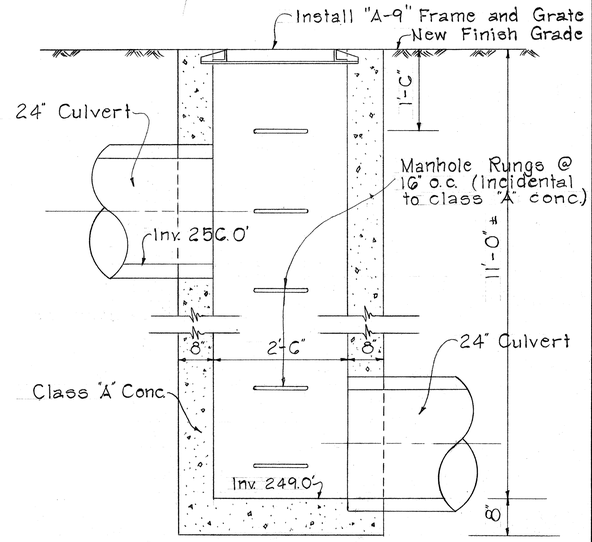

SECTION C-C

DETAIL OF "A-9" CONC. DROP INTAKE AT ℄ MAR "B" 5+00 % 43' ± Rt.

Scale: 3/4" = 1'-0"

DETAILS OF TYPE "A-12 M" C.D.I. AT ℄ RAMP RH-0 9+43 AND 11+50

Scale: 3/4" = 1'~0"

STATE OF HAWAII
DEPARTMENT OF TRANSPORTATION
HIGHWAYS DIVISION

DRAINAGE DETAILS

MOANALUA ROAD
(Red Hill Towards Ala Aolani)

F.A.P. Proj. No. F-078-1(11)

Scale: As Shown Date: April 1970

SHEET No. 10 OF 34 SHEETS

ORIGINAL PLAN	SURVEY PLOTTED BY	DATE
	DRAWN BY	
NOTE BOOK	TRACED BY	
	DESIGNED BY	
No.	COMPUTED BY	
	CHECKED BY	

K+E CRYSTALENE® LA 2920 TRACING PAPER

FED. ROAD DIST. NO.	STATE	FED. AID PROJ. NO.	FISCAL YEAR	SHEET NO.	TOTAL SHEETS
HAWAII	HAW.	F-078-1(11)	1969	86	258

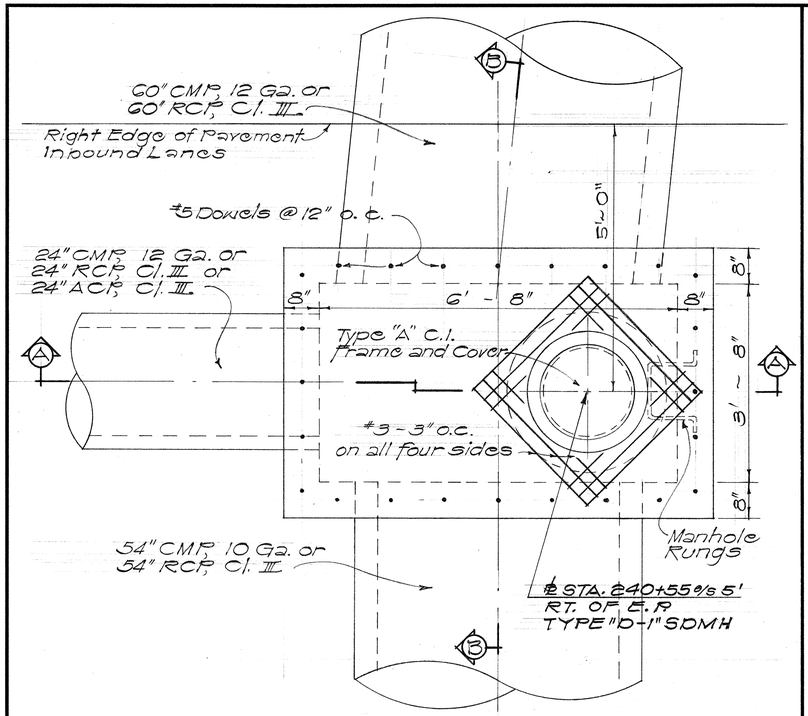

PLAN
Scale: 3/4" = 1'-0"

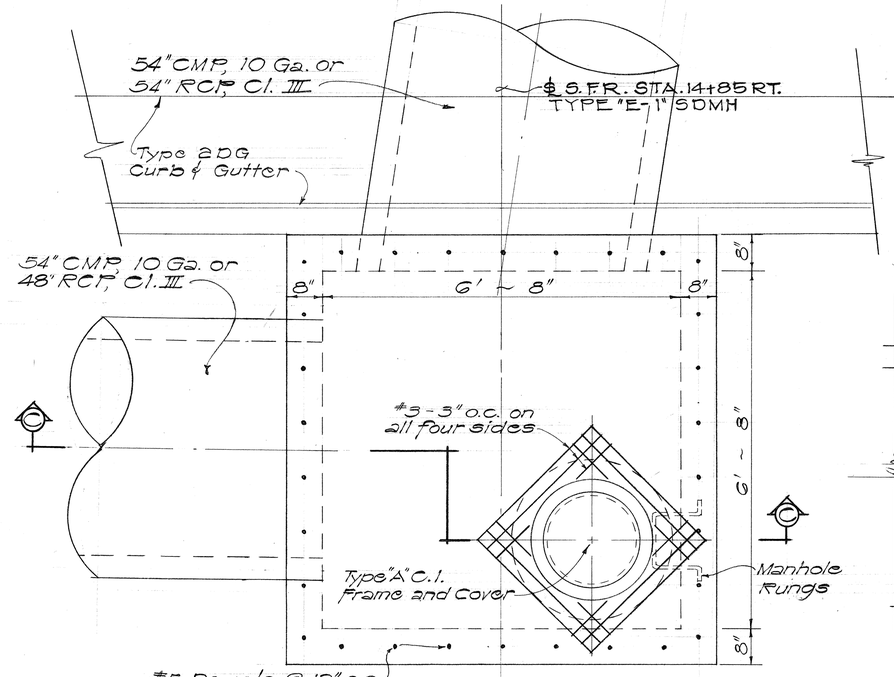

PLAN
Scale: 3/4" = 1'-0"

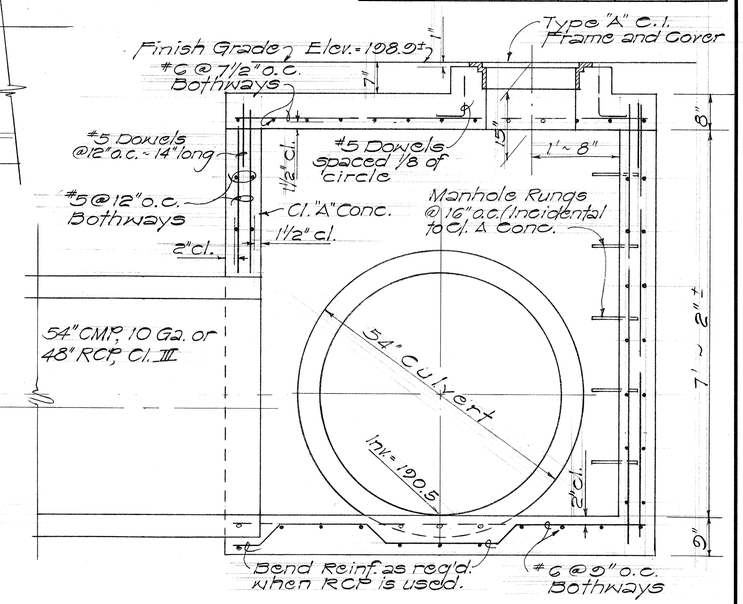

SECTION "C-C"
Scale: 3/4" = 1'-0"

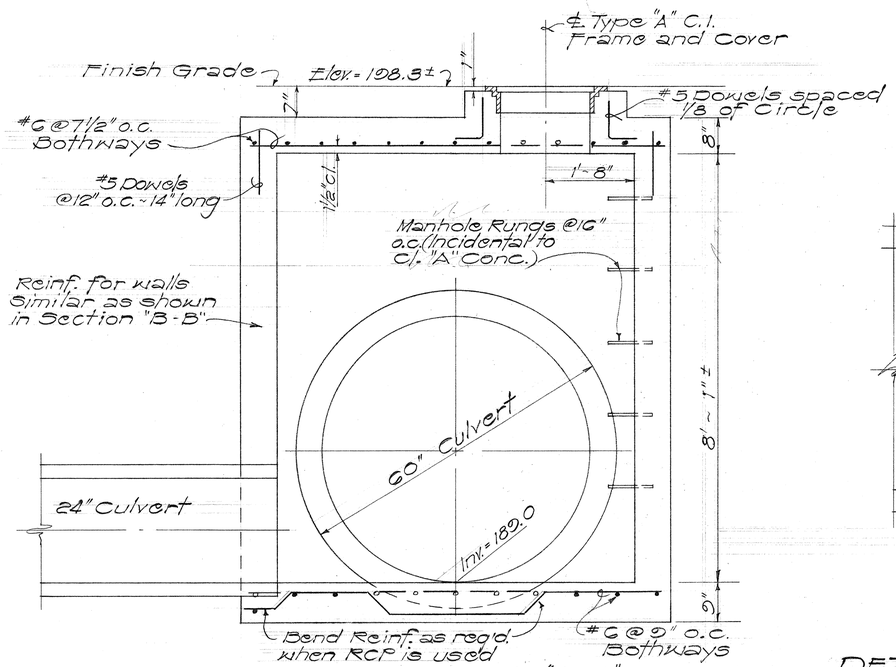

SECTION "A-A"
Scale: 3/4" = 1'-0"

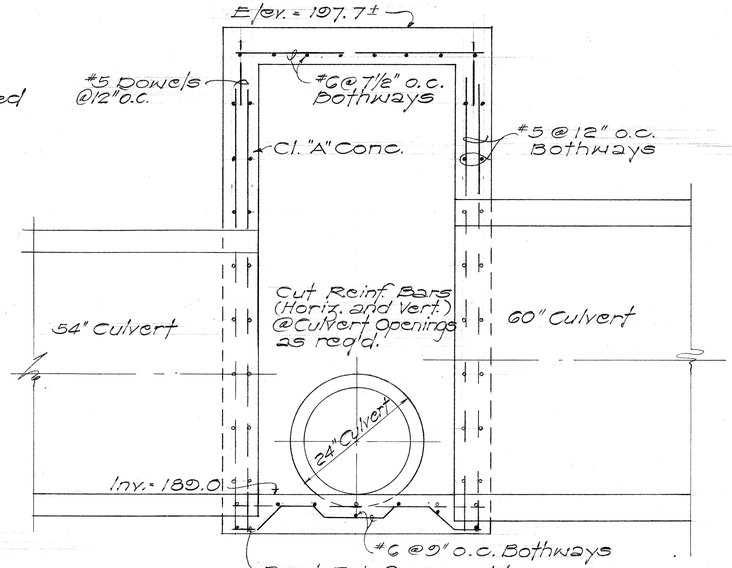

SECTION "B-B"
Scale: 3/4" = 1'-0"

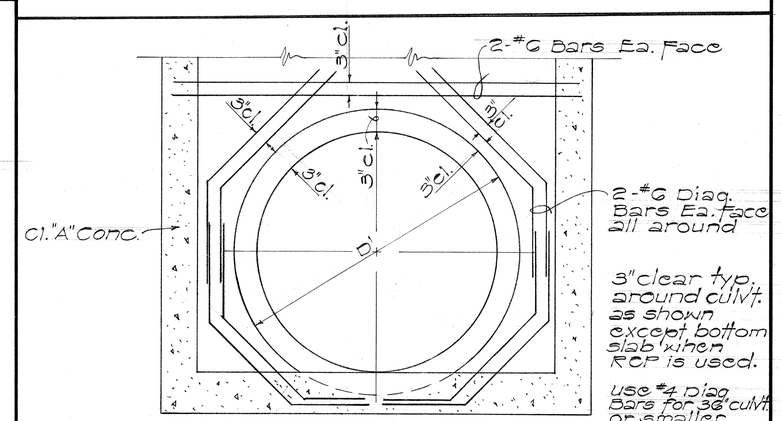

TYPICAL - ADD'L. REINFORCING AROUND CULVERT OPENINGS
Scale: 3/4" = 1'-0"

DETAILS OF TYPE "D-1" @ ℄ STA. 240+55 @ 5' RT. AND TYPE "E-1" @ ℄ SO. FRONTAGE RD. 14+85 RT.

ORIGINAL PLAN		DATE
	SURVEY PLOTTED BY	
	DRAWN BY	
	TRACED BY	
NOTE BOOK	DESIGNED BY	
	CHECKED BY	
No.	CHECKED BY	

STATE OF HAWAII
DEPARTMENT OF TRANSPORTATION
HIGHWAYS DIVISION

DRAINAGE DETAILS

MOANALUA ROAD
(Red Hill Towards Ala Aolani)

F.A.P. Proj. No. F-078-1 (11)

Scale: As Shown Date: May 1970

SHEET No. 20 OF 34 SHEETS

FED. ROAD DIST. NO.	STATE	FED. AID PROJ. NO.	FISCAL YEAR	SHEET NO.	TOTAL SHEETS
HAWAII	HAW.	F078-1(11)	1969	87	258

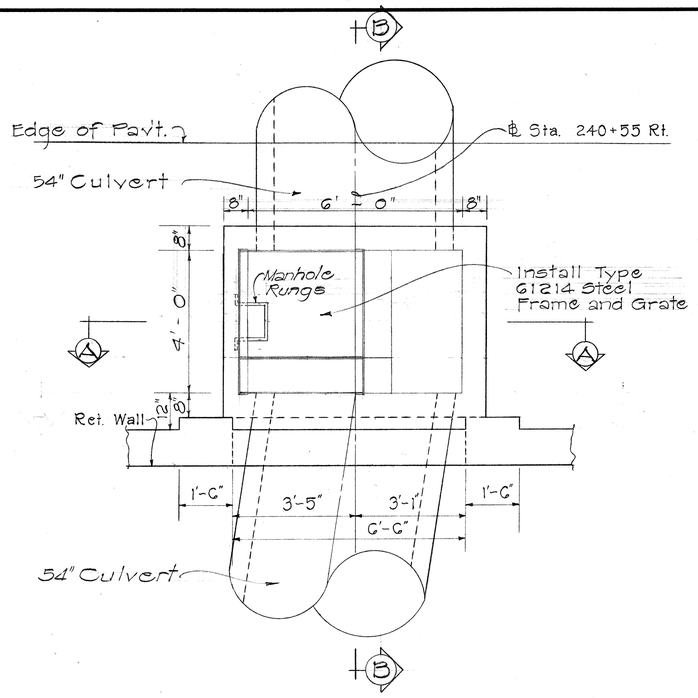

PLAN

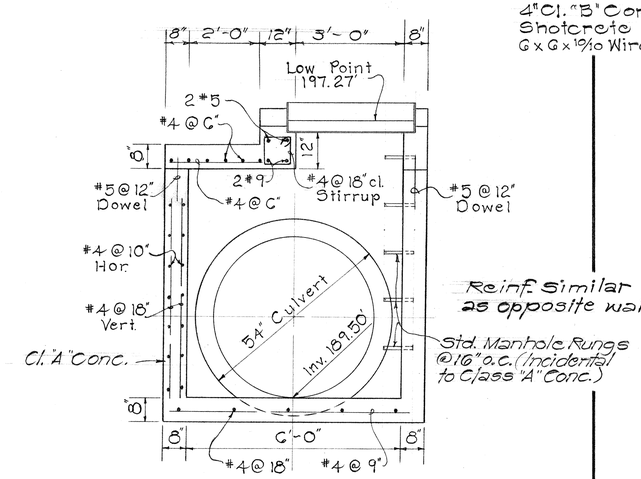

Reinf. Similar as opposite wall

SECTION A-A

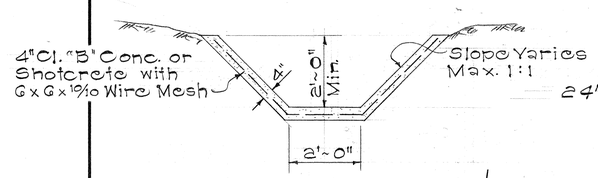

DETAIL FOR TRAP. DITCH

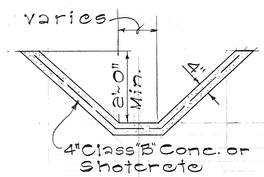

SECTION "D-D"

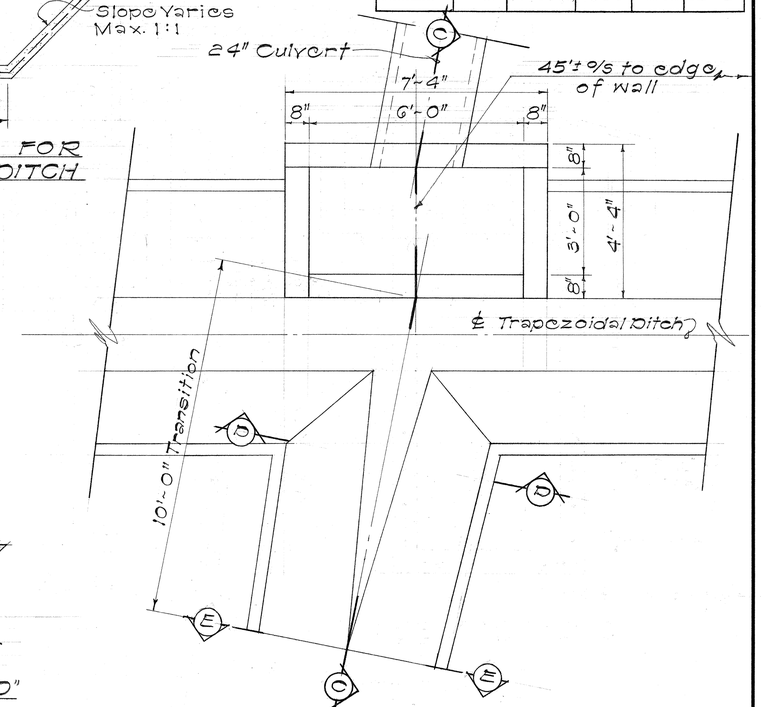

PLAN

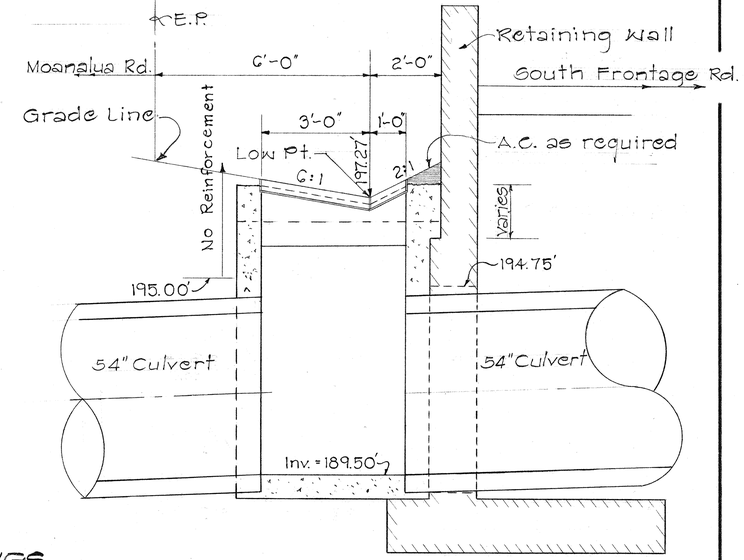

SECTION B-B

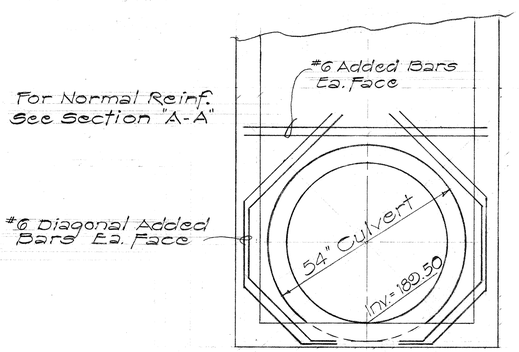

TYPICAL ADD'L. REINF. AROUND PIPE CULVERT OPENINGS

DETAILS OF 61214 "N" CDI @ ℄ 240+55 RT.

Scale: 1/2" = 1'-0"

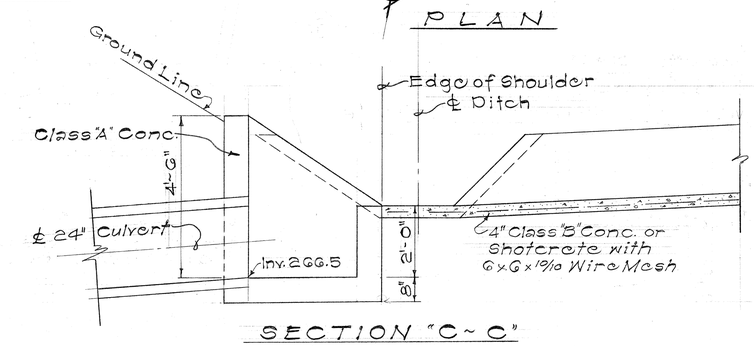

SECTION "C-C"

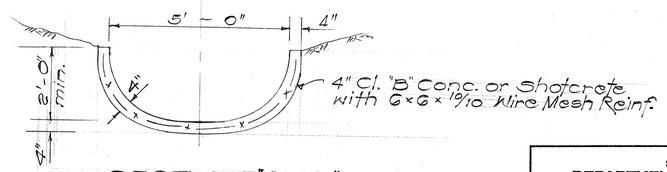

SECTION "E-E"

DETAILS OF TYPE "D" CDI
45'± 9/s TO EDGE OF WALL
@ VICINITY OF PARKING LOT

Scale: 1/2" = 1'-0"

STATE OF HAWAII
DEPARTMENT OF TRANSPORTATION
HIGHWAYS DIVISION

DRAINAGE DETAILS

MOANALUA ROAD
(Red Hill Towards Ala Aolani)

F.A.P. Proj. No. F-078-1(11)

Scale: As Shown — Date: April 1970

SHEET No. 21 OF 34 SHEETS

ORIGINAL PLAN	SURVEY PLOTTED BY	DATE
	TRACED BY	
	DESIGNED BY	
NOTE BOOK	QUANTITIES BY	
No.	CHECKED BY	

K+E CRYSTALENE® LA 2920 TRACING PAPER

FED. ROAD DIST. NO.	STATE	FED. AID PROJ. NO.	FISCAL YEAR	SHEET NO.	TOTAL SHEETS
HAWAII	HAW.	F078-1(11)	1969	88	258

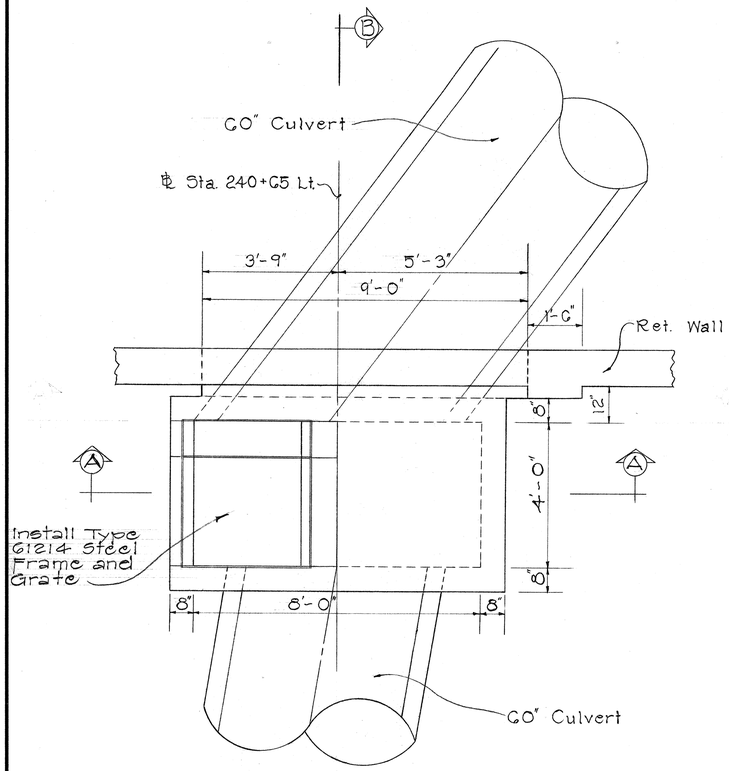

PLAN

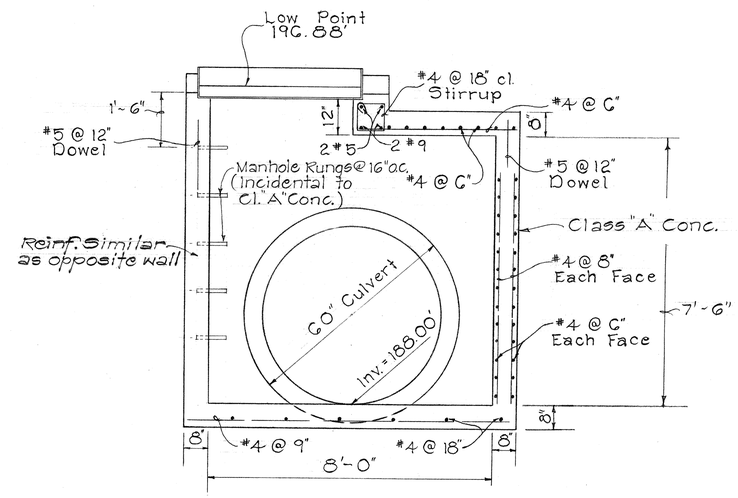

SECTION A-A

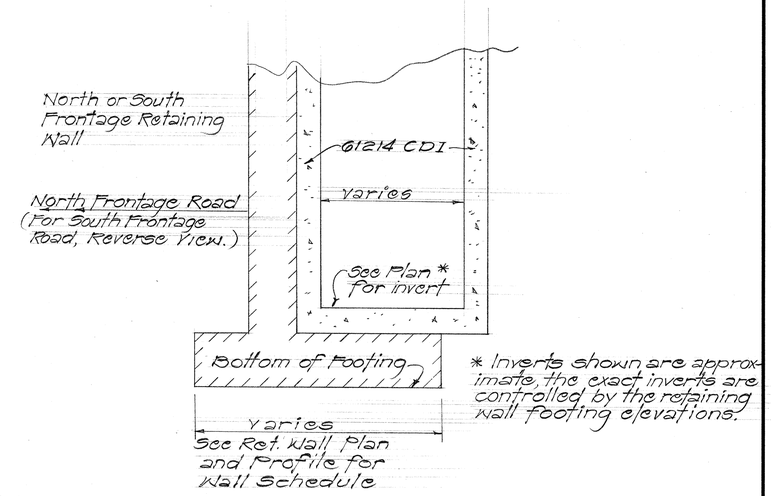

TYPICAL BOTTOM DETAIL OF 61214 C.D.I. ALONG NORTH & SOUTH FRONTAGE ROADS RETAINING WALLS

Not to Scale

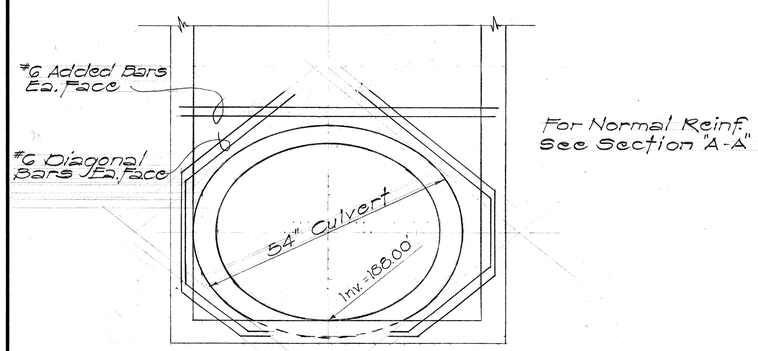

TYPICAL - ADD'L. REINF. AROUND PIPE CULVERT OPENINGS

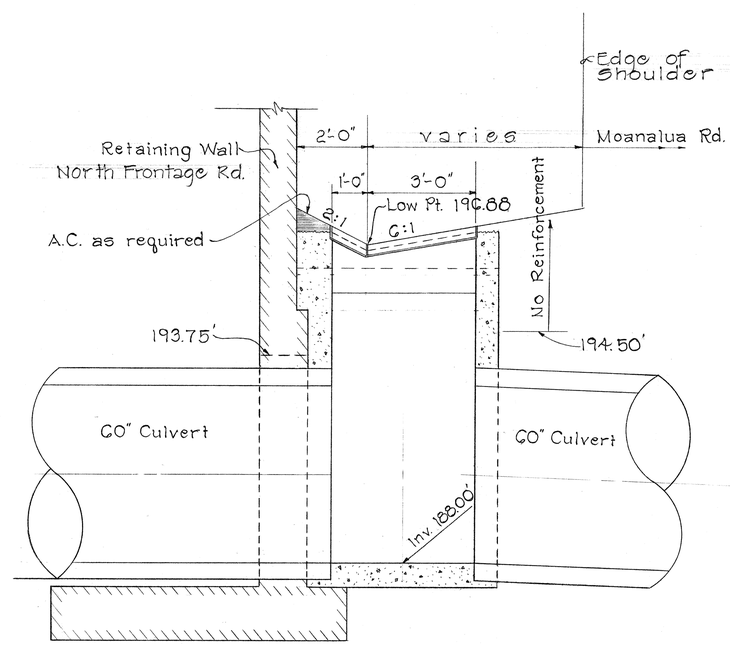

SECTION B-B

DETAILS OF 61214 "M" C.D.I @ ℄ 240+65 LT.

Scale: 1/2" = 1'-0"

ORIGINAL PLAN	
SURVEY PLOTTED BY	DATE
DRAWN BY	
TRACED BY	
DESIGNED BY	
QUANTITIES BY	
CHECKED BY	
NOTE BOOK No.	

STATE OF HAWAII
DEPARTMENT OF TRANSPORTATION
HIGHWAYS DIVISION

DRAINAGE DETAILS

MOANALUA ROAD
(Red Hill Towards Ala Aolani)

F.A.P. Proj. No. F-078-1(11)

Scale: As Shown Date: April 1970

SHEET No. 22 OF 34 SHEETS

FED. ROAD DIST. NO.	STATE	FED. AID PROJ. NO.	FISCAL YEAR	SHEET NO.	TOTAL SHEETS
HAWAII	HAW.	F-078-1(11)	1969	89	258

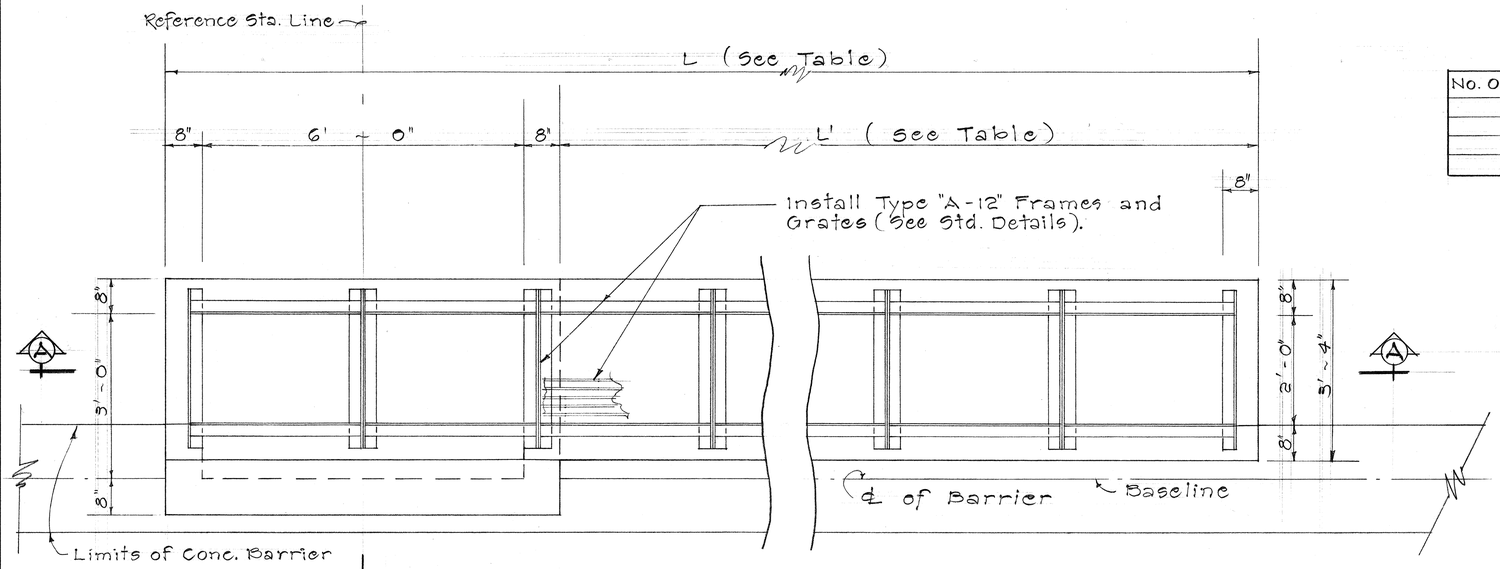

For This Section View See Typical on Sht. No. 90

PLAN

Scale: 3/4" = 1' ~ 0"

No. OF GRATES	L	L'
3	10' ~ 7"	3' ~ 3"
4	13' ~ 10"	6' ~ 6"
5	17' ~ 1"	9' ~ 9"
6	20' ~ 4"	13' ~ 0"

GENERAL NOTES

1. Culvert shall enter and leave Median C.D.I. from any position and in the direction indicated by the plans or ordered by the Engineer.
2. Manhole Rungs (16" o.c.) are required when "H" is greater than 4 feet 6 inches. Only one rung (12 inches from the bottom) is required if "H" is 4 feet 6 inches or less. Manhole Rungs maybe placed at any location as ordered by the Engineer.
3. Center Support Assembly shall be used when two or more gratings are specified and it shall not be paid for separately, but shall be considered incidental to Type "A-12" Frames & Grates.
4. For Median Drop Intakes located in the Concrete Barrier Transition Area, the location shall be parallel to the transition. In all cases, the final location must permit removal of the grates.

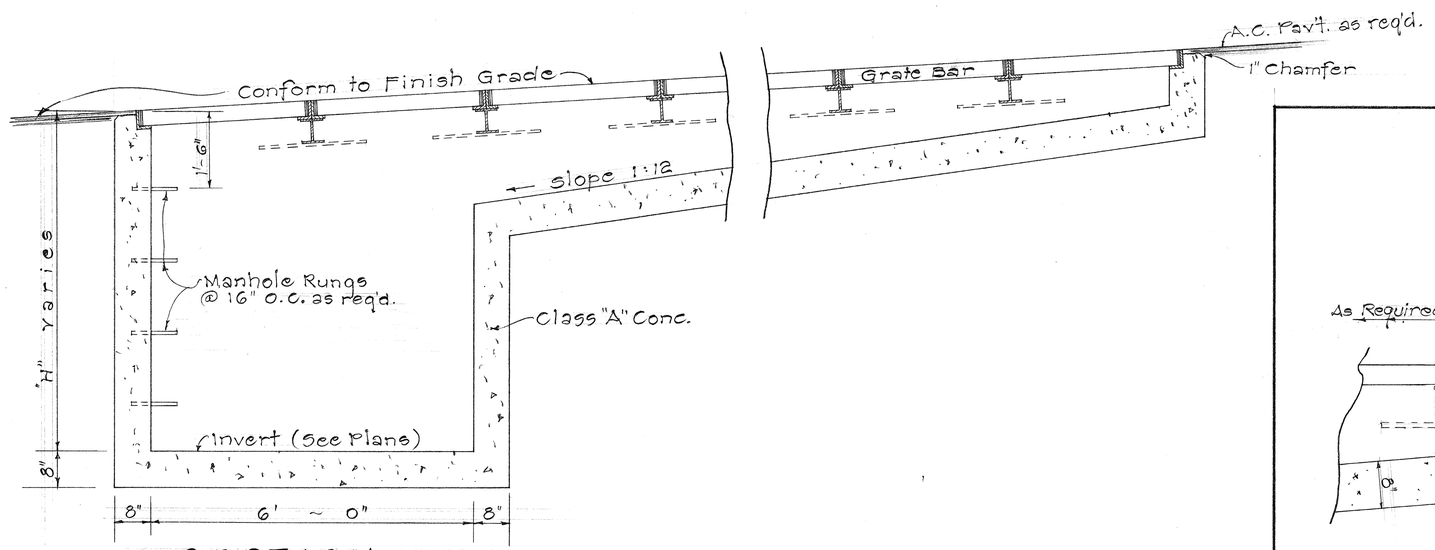

SECTION A-A

Scale: 3/4" = 1' ~ 0"

TYPICAL ~ DETAILS FOR MEDIAN C.D.I. WITH THREE (3) OR MORE GRATES

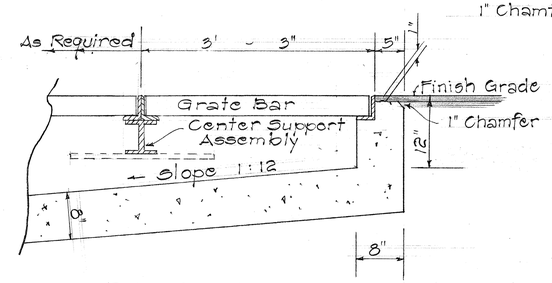

SECTION VIEW

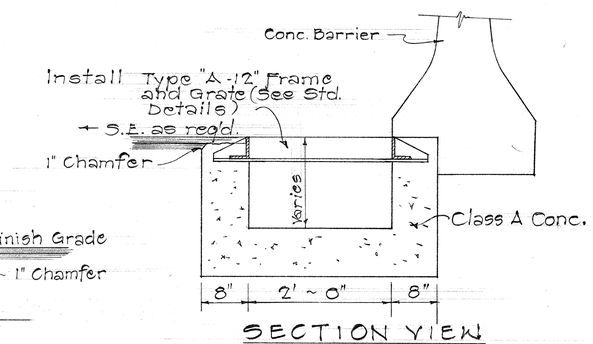

SECTION VIEW

TYPICAL SECTIONS FOR WING PORTION FOR MEDIAN C.D.I.

Scale: 1" = 1' ~ 0"

STATE OF HAWAII
DEPARTMENT OF TRANSPORTATION
HIGHWAYS DIVISION

DRAINAGE DETAILS

MOANALUA ROAD
(Red Hill Towards Ala Aolani)

F.A.P. Proj. No. F-078-1(11)

Scale: As Shown Date: April 1970

SHEET No. 23 OF 34 SHEETS

ORIGINAL PLAN	SURVEY PLOTTED BY	DATE
	DRAWN BY	
	TRACED BY	
NOTE BOOK	DESIGNED BY	
	QUANTITIES BY	
No.	CHECKED BY	

FED. ROAD DIST. NO.	STATE	FED. AID PROJ. NO.	FISCAL YEAR	SHEET NO.	TOTAL SHEETS
HAWAII	HAW.	F078-1(11)	1969	90	258

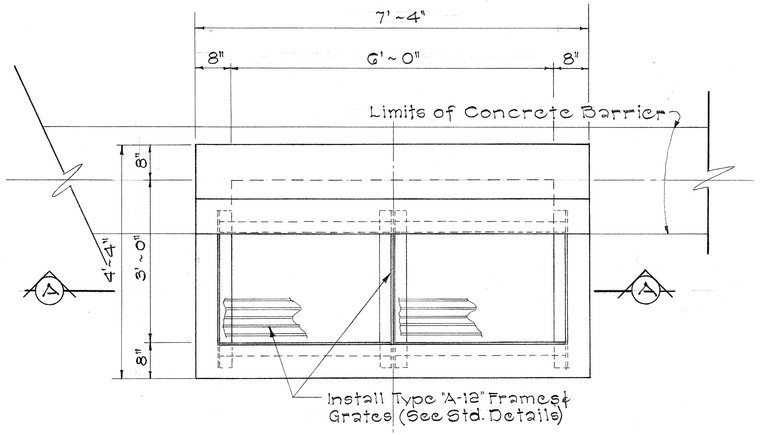

PLAN

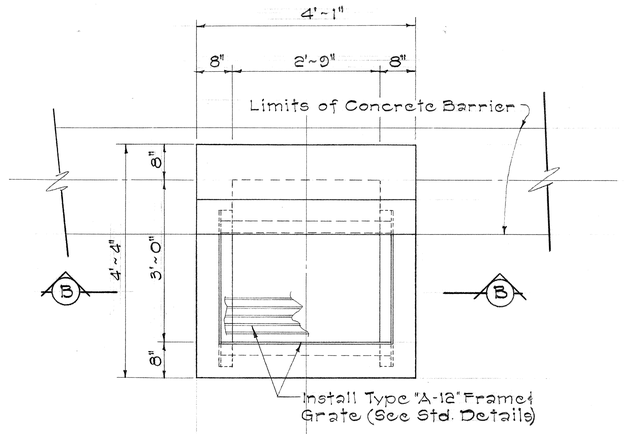

PLAN

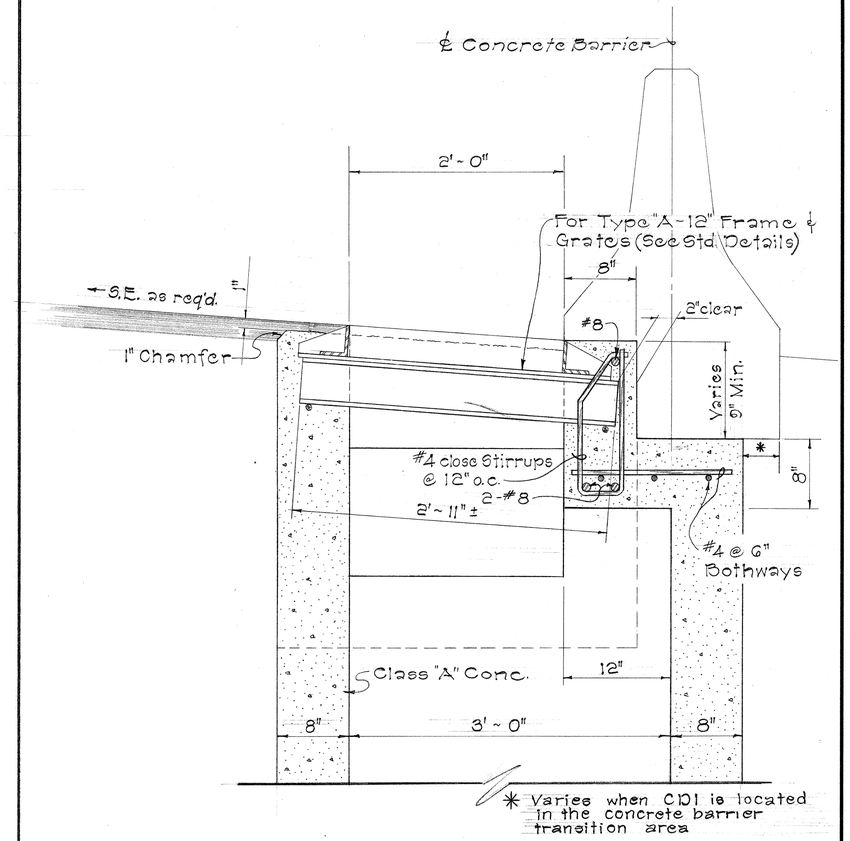

TYPICAL SECTION FOR MEDIAN C.D.I.

Scale: 1½" = 1'-0"

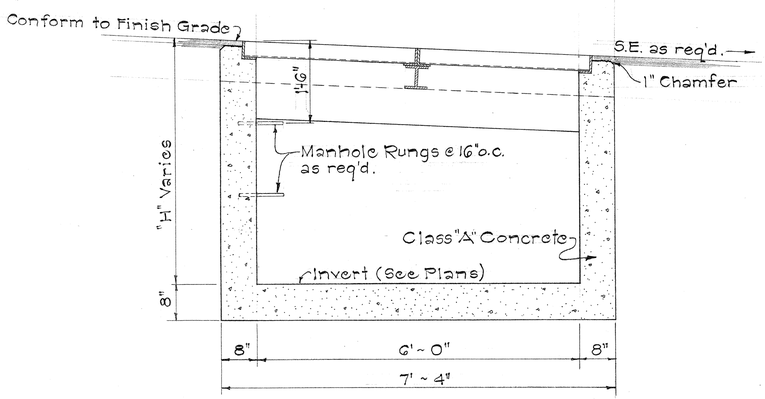

SECTION A-A

DETAIL OF MEDIAN C.D.I. WITH TWO (2) GRATES

Scale: ¾" = 1'-0"

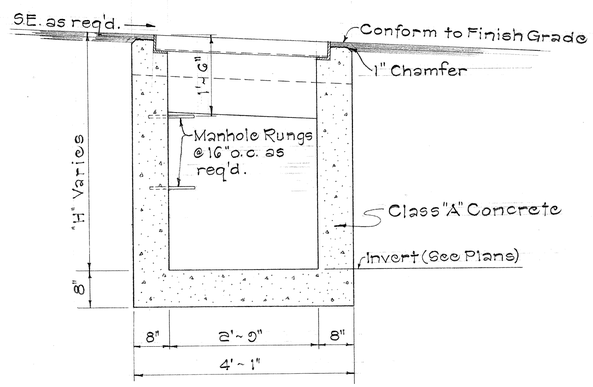

SECTION B-B

DETAIL OF MEDIAN C.D.I. WITH ONE (1) GRATE

Scale: ¾" = 1'-0"

ORIGINAL PLAN	SURVEY PLOTTED BY	DATE
	DRAWN BY	"
	TRACED BY	"
	DESIGNED BY	"
NOTE BOOK	QUANTITIES BY	"
No.	CHECKED BY	"

STATE OF HAWAII
DEPARTMENT OF TRANSPORTATION
HIGHWAYS DIVISION

DRAINAGE DETAILS

MOANALUA ROAD
(Red Hill Towards Ala Aolani)

F.A.P. Proj. No. F-078-1 (11)

Scale: As Shown Date: April 1970

SHEET No. 24 OF 34 SHEETS

2/17/69

FED. ROAD DIST. NO.	STATE	FED. AID PROJ. NO.	FISCAL YEAR	SHEET NO.	TOTAL SHEETS
HAWAII	HAW.	F-078-1(11)	1969	91	258

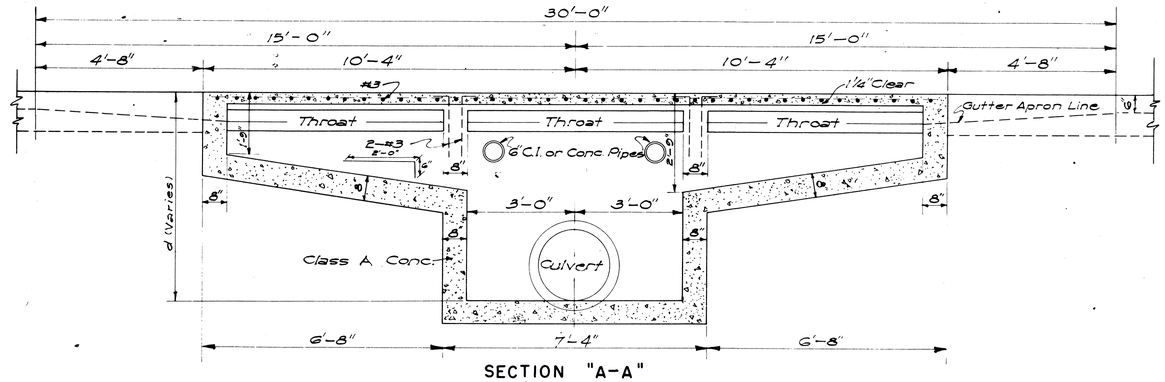

SECTION "A-A"

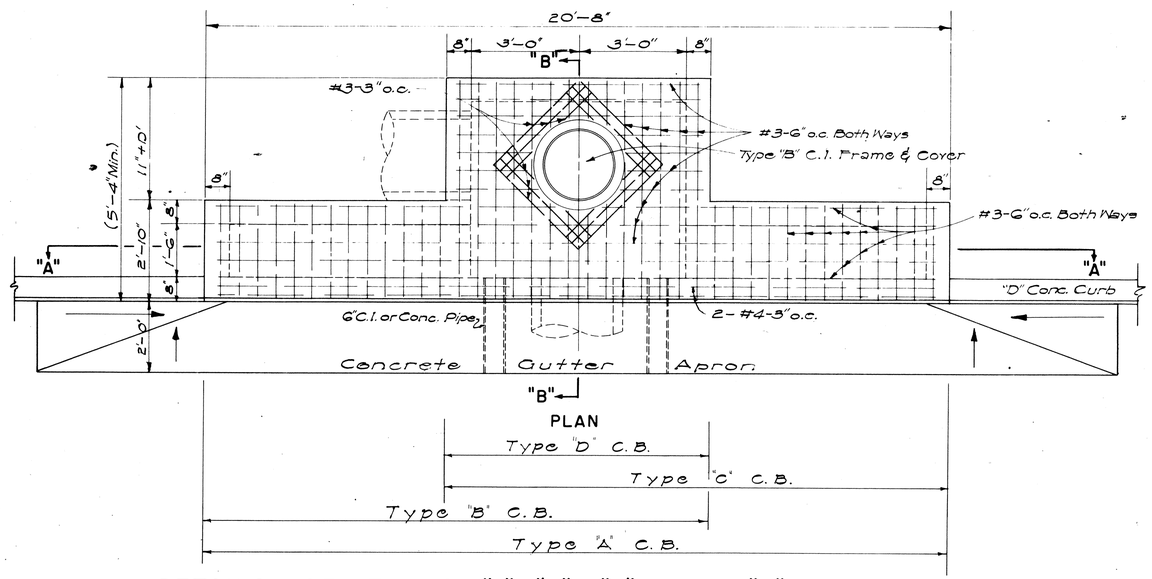

DETAILS OF TYPES "A", "B", "C" AND "D" CATCH BASINS

SCALE: 1/2" = 1'-0"

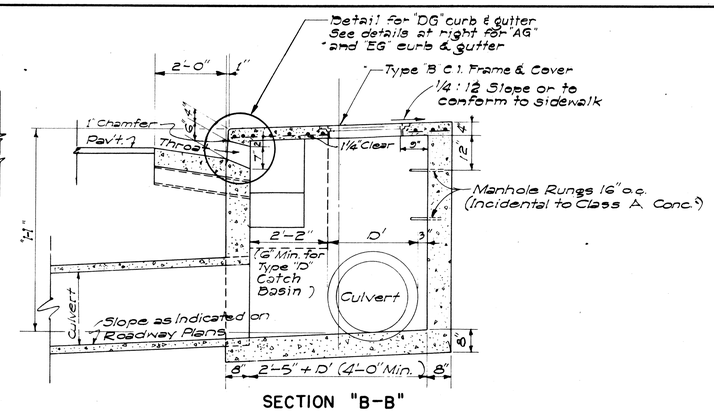

SECTION "B-B"

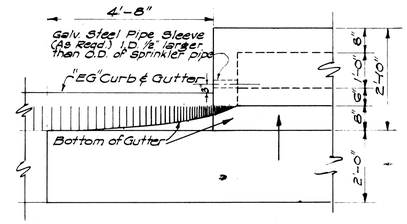

DETAIL OF CATCH BASIN WITH "EG" CURB & GUTTER

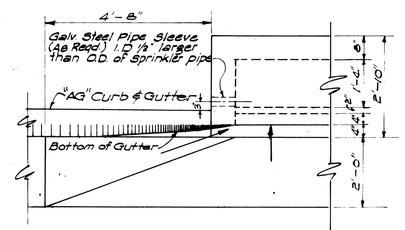

DETAIL OF CATCH BASIN WITH "AG" CURB & GUTTER

SCALE: 1/2" = 1'-0"

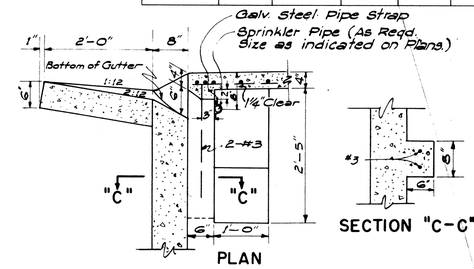

THROAT DETAIL FOR "EG" CURB & GUTTER

SCALE: 3/4" = 1'-0"

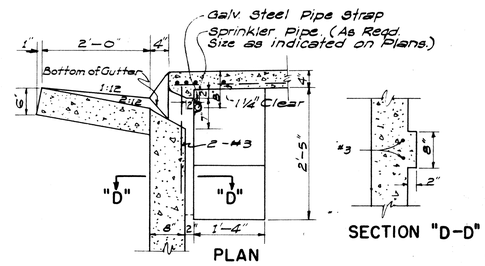

THROAT DETAIL FOR "AG" CURB & GUTTER

SCALE: 3/4" = 1'-0"

GENERAL NOTES

1. Quantities based on d = 5.75' and D' = 30".
2. Quantities do not include concrete for Gutter Apron.
3. The Contractor shall install two 6" Cast Iron or Concrete Pipes as incidental to Class A Concrete for Construction Drainage. The Engineer shall determine the exact location in the field.
4. Culvert shall leave C.B. from any position and any direction indicated by plans or ordered by the Engineer. Culvert may both enter and leave C.B. so that C.B. will also act as Manhole.
5. The Contractor shall install Galvanized Steel Pipe Sleeves and Straps as incidental to Sprinkler System.
6. The type of curb and/or gutter (Type 1, 2, 3, etc.) shall conform to the type specified on the roadway plans.
7. Manhole Rungs (16" o.c.) are required when "H" is greater than 4 feet 6 inches. Only one rung (12 inches from the bottom) is required if "H" is 4 feet 6 inches or less. Type "B" Cast Iron Frame and Cover and Manhole Rungs may be placed at any location as ordered by the Engineer.

ESTIMATED QUANTITIES

Type	Class A Conc.	Struct. Exc.	Reinf. Steel	Gutter Length
"A"	7.5 c.y.	24.7 c.y.	145 lb.	30'-0"
"B"	6.0 c.y.	21.5 c.y.	108 lb.	23'-4"
"C"	6.0 c.y.	21.5 c.y.	108 lb.	23'-4"
"D"	4.0 c.y.	16.5 c.y.	77 lb.	16'-8"

NO.	REVISION	APPROVED BY	DATE

APPROVAL RECOMMENDED:

HYDRAULIC DESIGN ENGINEER — DATE 12-17-69

APPROVED:

ASSISTANT CHIEF, ENGINEERING — DATE 12-17-69

STATE OF HAWAII
DEPARTMENT OF TRANSPORTATION
HIGHWAYS DIVISION
STANDARD DETAILS

CATCH BASINS

Scale: As Noted — Date: July, 1969

SHEET No. 25 OF 34 SHEETS DH 1

91

ORIGINAL PLAN — NOTE BOOK No. — SURVEY PLOTTED BY — DESIGNED BY O.Y.M. — DRAWN BY — TRACED BY — QUANTITIES BY — CHECKED BY — DATE

FED. ROAD DIST. NO.	STATE	FED. AID PROJ. NO.	FISCAL YEAR	SHEET NO.	TOTAL SHEETS
HAWAII	HAW.	F078-1(11)	1969	92	258

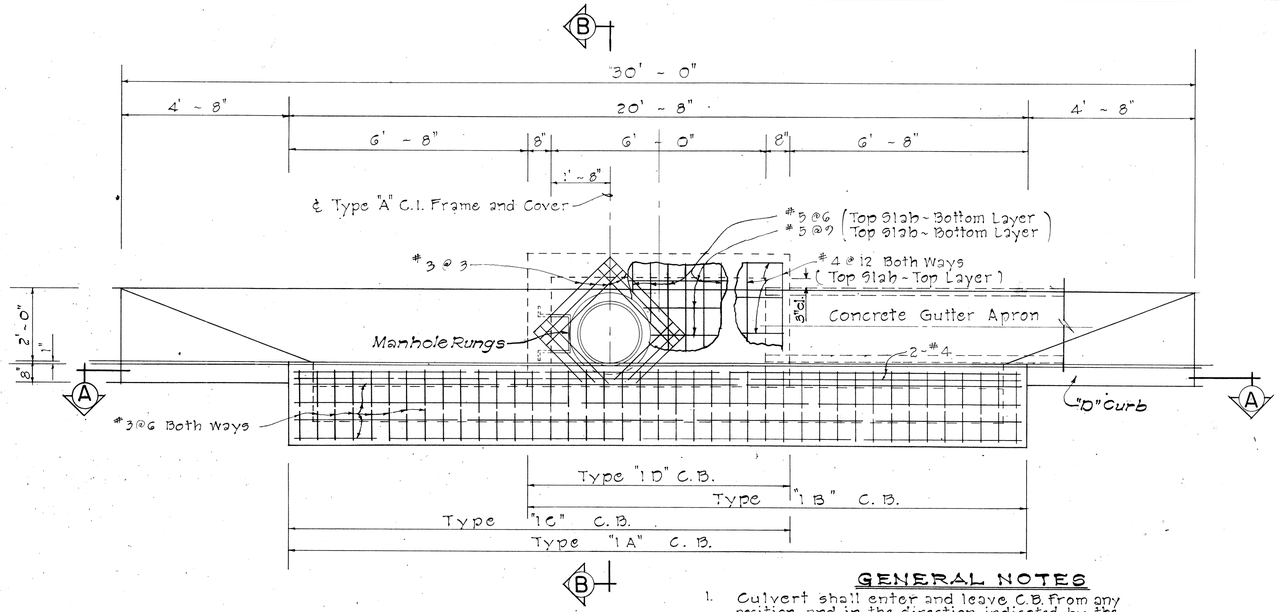

PLAN

Scale: 1/2" = 1' - 0"

GENERAL NOTES

1. Culvert shall enter and leave C.B. from any position and in the direction indicated by the plans or ordered by the Engineer.
2. D' shall be the maximum outside dimension of the culvert at the C.B. wall.
3. The type of curb and/or gutter (Type 1, 2, 3, etc.) shall conform to the type specified on the roadway plans.
4. Manhole Rungs (16" o.c.) are required when "H" is greater than 4 feet 6 inches. Only one rung (12 inches from the bottom) is required if "H" is 4 feet 6 inches or less. Type "A" C.I. Frame & Cover and Manhole Rungs may be placed at any location as ordered by the Engineer.

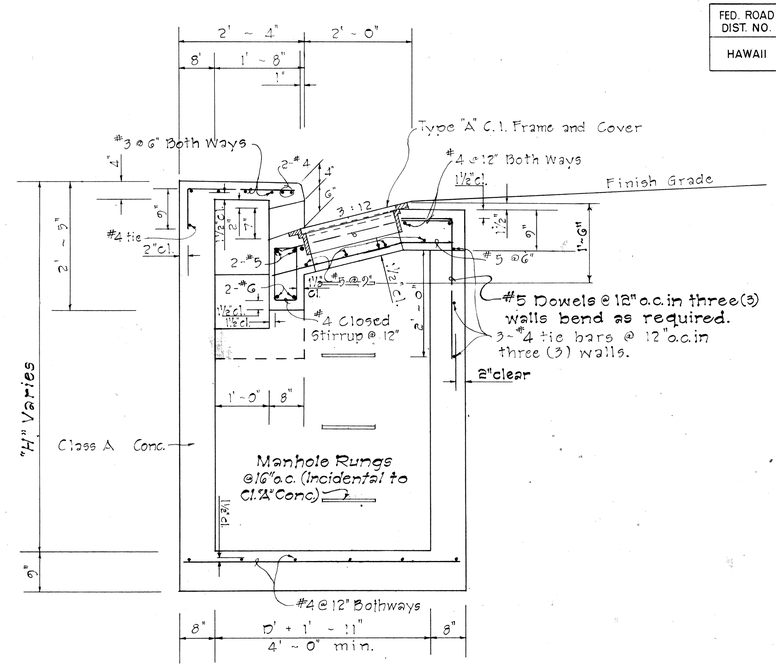

SECTION "B-B"

Scale: 3/4" = 1' - 0"

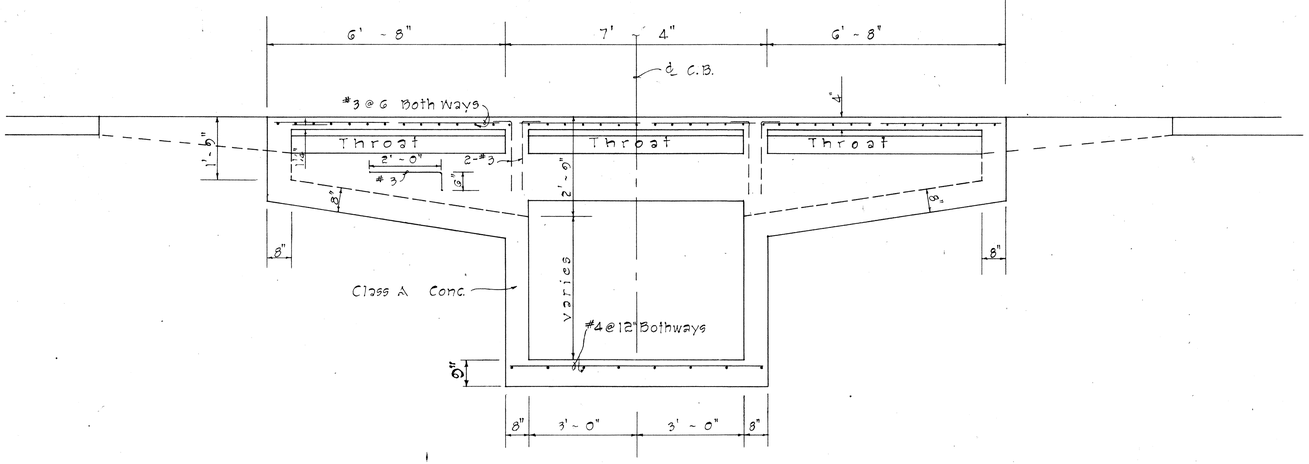

SECTION "A-A"

Scale: 1/2" = 1' - 0"

DETAILS OF TYPE "IA", "IB", "IC" AND "ID" CATCH BASIN

APPROVAL RECOMMENDED:

R. Takano — HYDRAULIC DESIGN ENGINEER — 12-17-69 DATE

APPROVED:

Stanley S. Sakai — ASSISTANT CHIEF, ENGINEERING — 12-17-69 DATE

NO.	REVISION	APPROVED BY	DATE

STATE OF HAWAII
DEPARTMENT OF TRANSPORTATION
HIGHWAYS DIVISION

STANDARD DETAILS

TYPE "IA", "IB", "IC", AND "ID" CATCH BASINS

Scale: As Noted — Date: July, 1969

SHEET No. 26 OF 34 SHEETS — DH 3

92

ORIGINAL PLAN	SURVEY PLOTTED BY	DATE
	SURVEY BY	"
	TRACED BY	"
NOTE BOOK	DESIGNED BY	"
	QUANTITIES BY	"
No.	CHECKED BY	"

FED. ROAD DIST. NO.	STATE	FED. AID. PROJECT	FISCAL YEAR	SHEET NO.	TOTAL SHEETS
HAWAII	HAWAII	F-078-1(11)	1969	93	258

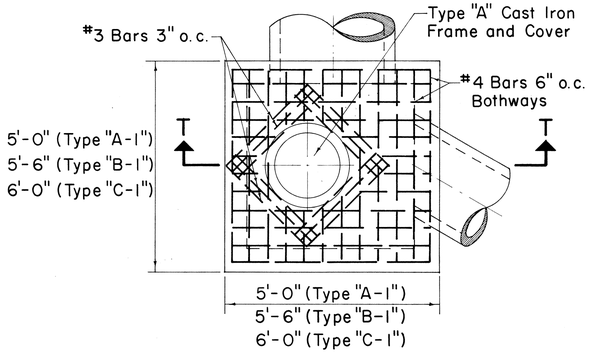

PLAN

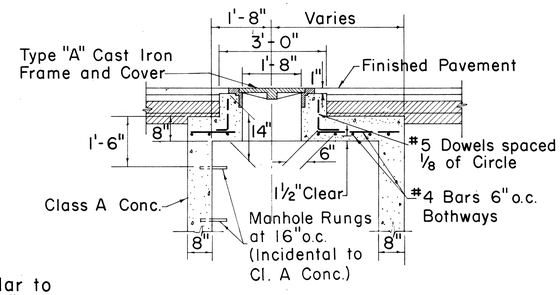

SECTION T-T

Note:
Bottom detail similar to Type "A", "B", & "C".

TYPE "A-1", "B-1", & "C-1"
STORM DRAIN MANHOLE
TOP DETAIL UNDER PAVEMENT

Scale: ½" = 1'-0"

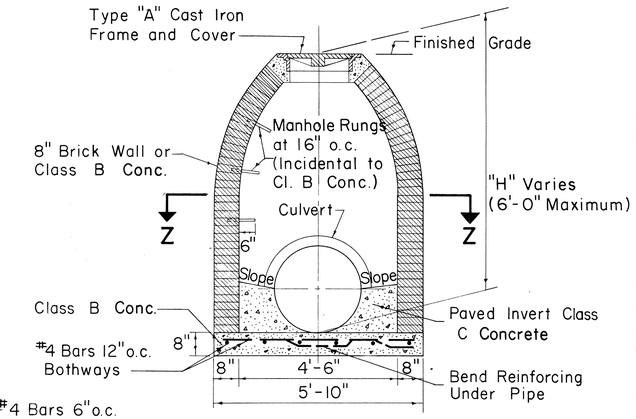

SECTION Y-Y

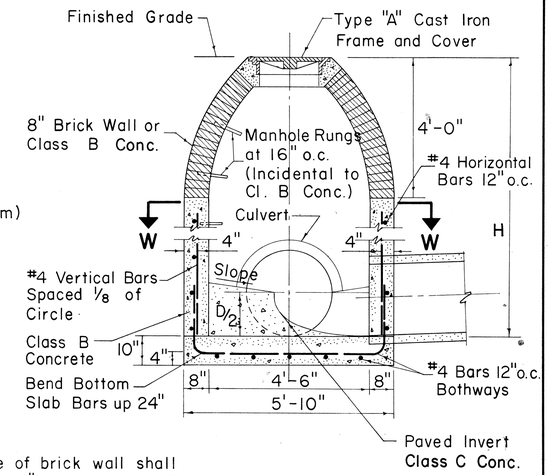

SECTION X-X

NOTE:
1. Exterior surface of brick wall shall be plastered with 1" thickness of 1:2 Cement Mortar.
2. Number, size and direction of culvert at manhole to be as shown on plans.
3. Paved invert not required at drop manholes.
4. All Class C Concrete to be incidental to Class B Concrete.

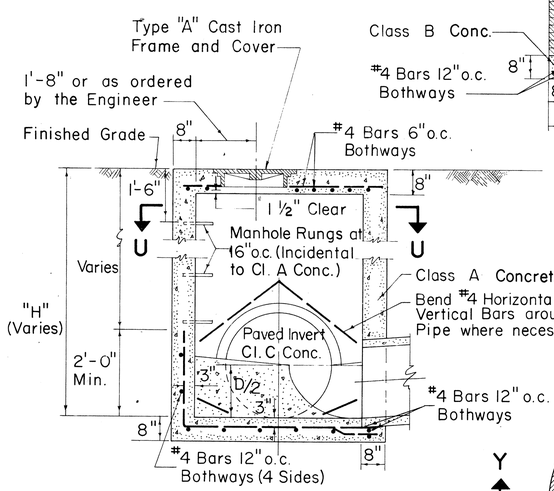

SECTION V-V

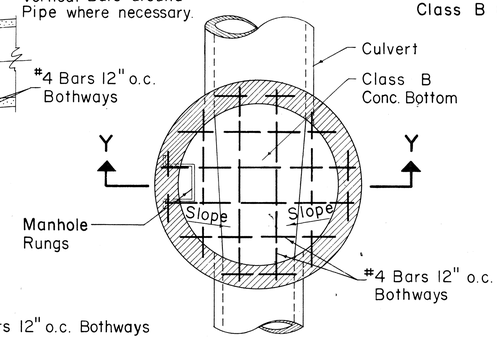

SECTION Z-Z

TYPE "D" STORM DRAIN MANHOLE

Scale: ½" = 1'-0"

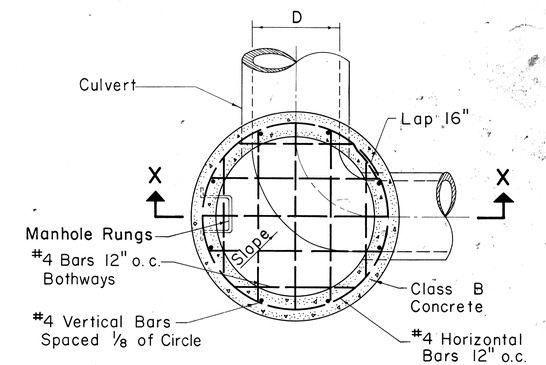

SECTION W-W

TYPE "E" STORM DRAIN MANHOLE

Scale: ½" = 1'-0"

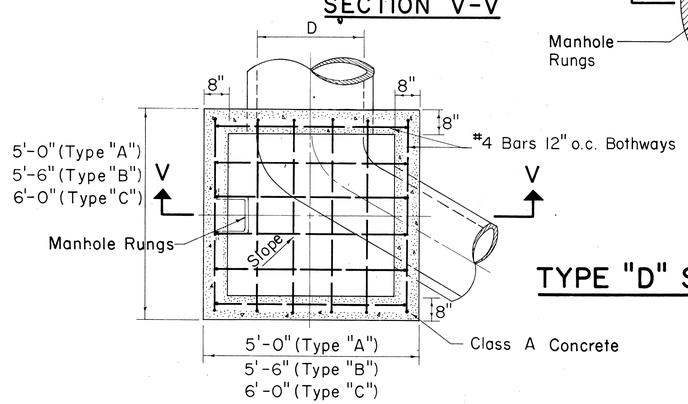

SECTION U-U

TYPE "A", "B", & "C"
S.D.M.H.

Scale: ½" = 1'-0"

GENERAL NOTES

1. Culvert shall enter and leave S.D.M.H. from any position and in the direction indicated by the plans or ordered by the Engineer.
2. Manhole Rungs (16"o.c.) are required when "H" is greater than 4'-6". Only one rung (12" from the bottom) is required if "H" is 4'-6" or less. Type "A" C.I. Frame and Cover and Manhole Rungs may be placed at any location as ordered by the Engineer.

APPROVAL RECOMMENDED:
G. Yakano — 12-17-69
HYDRAULIC DESIGN ENGINEER — DATE

APPROVED:
[signature] — 12-17-69
ASS'T. CHIEF, ENGINEERING — DATE

NO.	REVISION	APPROVED BY	DATE

STATE OF HAWAII
DEPARTMENT OF TRANSPORTATION
HIGHWAYS DIVISION

STANDARD DETAILS
STORM DRAIN MANHOLES

Scales: As Noted — Date: July, 1969

SHEET NO. 27 OF 34 SHEETS — DH 5

FED. ROAD DIST. NO.	STATE	FED. AID PROJ. NO.	FISCAL YEAR	SHEET NO.	TOTAL SHEETS
HAWAII	HAW.	F078-1(11)	1969	94	258

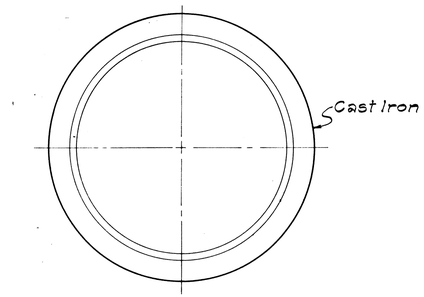

PLAN OF RIM

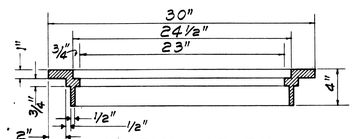

SECTION OF RIM

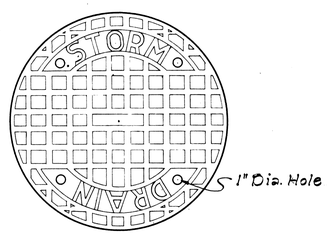

TOP VIEW OF COVER

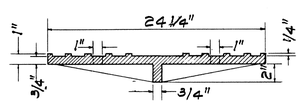

SECTION

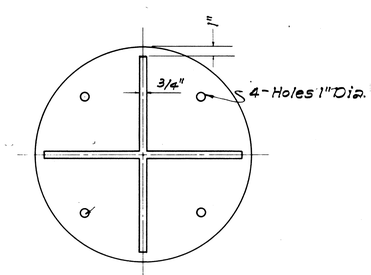

BOTTOM VIEW OF COVER

DETAILS OF TYPE "B" CAST IRON FRAME AND COVER

SCALE: 1-1/2" = 1'-0"

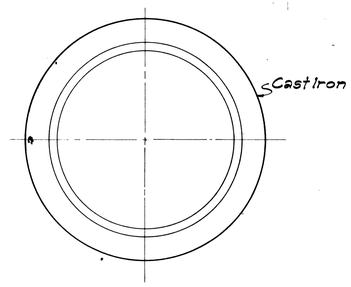

PLAN OF RIM

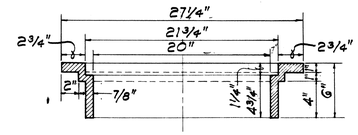

SECTION OF RIM

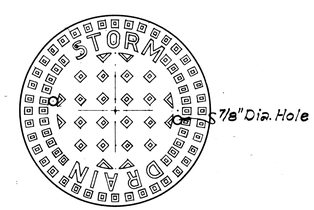

TOP VIEW OF COVER

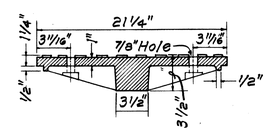

SECTION

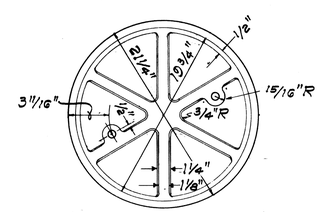

BOTTOM VIEW OF COVER

DETAILS OF TYPE "A" CAST IRON FRAME AND COVER

SCALE: 1-1/2" = 1'-0"

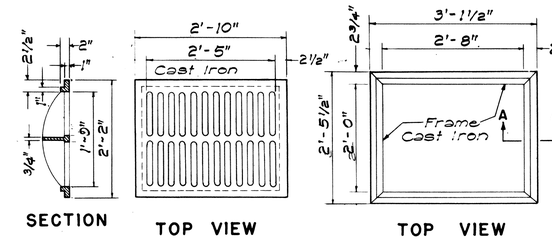

SECTION TOP VIEW TOP VIEW

TYPE C C.I. FRAME AND GRATE

SCALE: 3/4" = 1'-0"

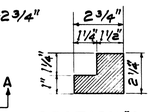

SECTION "A-A"
SCALE 3" = 1'-0"

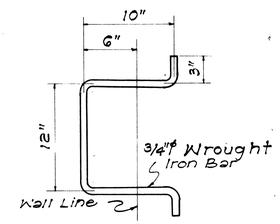

MANHOLE RUNG

SCALE: 1-1/2" = 1'-0"

APPROVAL RECOMMENDED:

G. Takamo — 12-17-69
HYDRAULIC DESIGN ENGINEER — DATE

APPROVED:

Richard R. Robinson — 12-17-69
ASSISTANT CHIEF, ENGINEERING — DATE

NO.	REVISION	APPROVED BY	DATE

STATE OF HAWAII
DEPARTMENT OF TRANSPORTATION
HIGHWAYS DIVISION

STANDARD DETAILS
CATCH BASIN AND MANHOLE CASTINGS

Scale: As Noted — Date: July, 1969

SHEET No 28 OF 34 SHEETS DH.6

ORIGINAL PLAN	SURVEY PLOTTED BY:	DATE:
	DESIGNED BY:	"
	DRAWN BY:	"
NOTE BOOK	TRACED BY: L. Calisto	"
	QUANTITIES BY:	"
No.	CHECKED BY:	"

FED. ROAD DIST. NO.	STATE	FED. AID PROJ. NO.	FISCAL YEAR	SHEET NO.	TOTAL SHEETS
HAWAII	HAW.	F-076-1(11)	1969	95	258

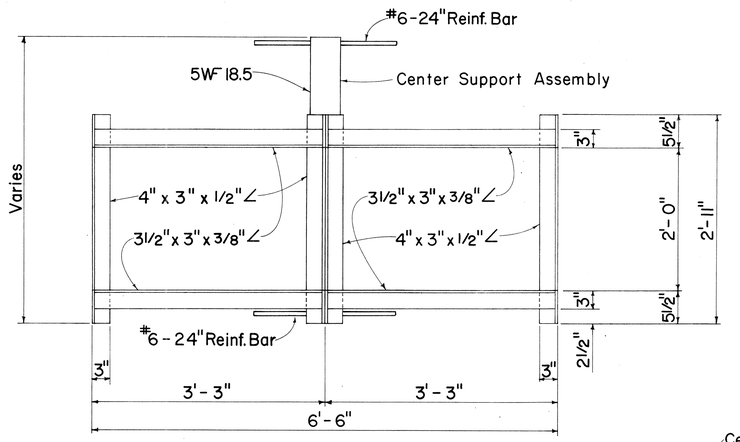

PLAN
(Two or More Grates)

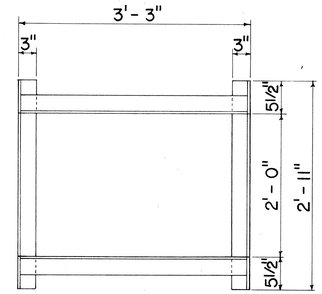

PLAN
(Single Grate)

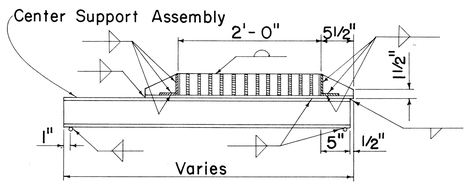

CROSS SECTION
(Thru Frame & Grate)

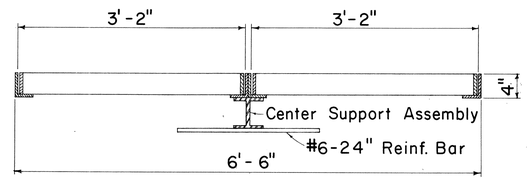

LONGITUDINAL SECTION
(Thru Frame & Grate)

FRAME DETAILS
Scale: 1" = 1'-0"

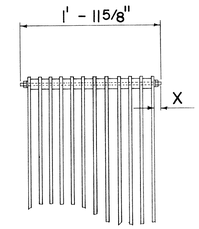

BOLTED END BLOCK
Scale: 1" = 1'-0"

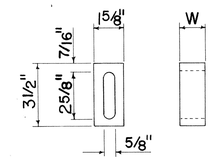

BAR SPACER
Scale: 3" = 1'-0"

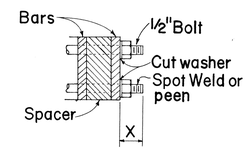

BOLTING DETAIL
Scale: 3" = 1'-0"

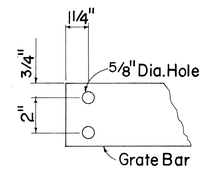

END OF BAR
Scale: 3" = 1'-0"

ALTERNATIVE BOLTED GRATE

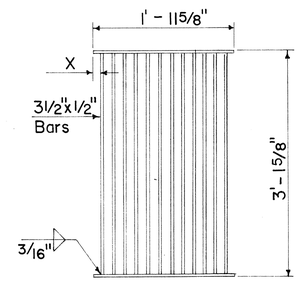

PLAN

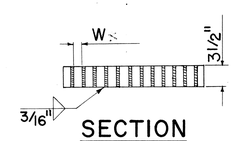

SECTION

ALTERNATIVE WELDED GRATE
Scale: 1" = 1'-0"

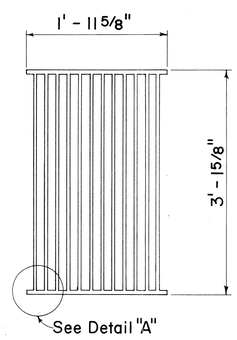

PLAN
Scale: 1" = 1'-0"

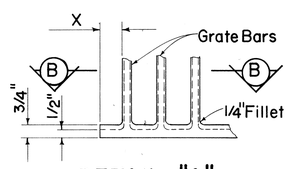

DETAIL "A"
Scale: 3" = 1'-0"

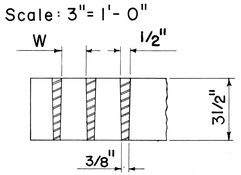

SECTION "B-B"
Scale: 3" = 1'-0"

ALTERNATIVE CAST MALLEABLE IRON OR CAST STEEL GRATE

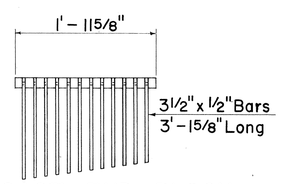

CAST END BLOCK
Scale: 1" = 1'-0"

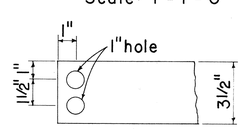

END OF BAR
Scale: 3" = 1'-0"

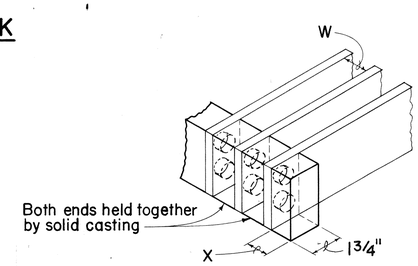

ALTERNATIVE CAST MALLEABLE IRON OR CAST STEEL END BLOCK GRATE

GENERAL NOTES

1. Contractor has the option of using cast malleable iron, cast steel, welded, bolted, cast malleable iron end block or cast steel end block grate.
2. Grates and Frames shall be hot dip galvanized after fabrication, see specifications.
3. All welds 3/8" unless otherwise noted.
4. Center support assembly shall be used when two or more grates are specified. Incidental to Types A-9 or A-12 Frame and Grates.
5. Refer to "Grate Bar Spacing Table" for Types A-9 and A-12 Grate dimensions.
6. The various materials shall conform to the specifications of ASTM as listed in the following tabulation and the Std. Specifications.

Material	ASTM Designation
Structural Steel	A283, Grade D
Cast Steel	A27, Grade 65-35
Malleable Iron Casting	A47, Gr. No. 35018

GRATE BAR SPACING TABLE			
TYPE	NO. BARS	CLEAR BAR SPACING - W	X
A-9	9	2"	1 9/16"
A-12	12	1 3/8"	1 1/4"

NOTE:

1. Type A-9 – Use in locations off the roadbed on all types of highways.
2. Type A-12 – Use within the roadbed on all types of highways.

APPROVAL RECOMMENDED:

G. Takano — 12-17-69
HYDRAULIC DESIGN ENGINEER — DATE

APPROVED:

12-17-69
ASSISTANT CHIEF, ENGINEERING — DATE

NO.	REVISION	APPROVED BY	DATE

STATE OF HAWAII
DEPARTMENT OF TRANSPORTATION
HIGHWAYS DIVISION

STANDARD DETAILS

TYPE A-9 AND A-12
FRAMES AND GRATES

Scales: As Noted — Date: Aug. 1968

SHEET No. 29 OF 34 SHEETS — DH 7

ORIGINAL PLAN		DATE
	SURVEY PLOTTED BY	
	DRAWN BY L.C.L.M.	7-68
	TRACED BY L.C.L.T.	8-68
	DESIGNED BY H.X.M.	7-68
NOTE BOOK	QUANTITIES BY	" "
No.	CHECKED BY H.X.M.	8-68

FED. ROAD DIST. NO.	STATE	FED. AID PROJ. NO.	FISCAL YEAR	SHEET NO.	TOTAL SHEETS
HAWAII	HAW.	F-078-1(11)	1969	96	258

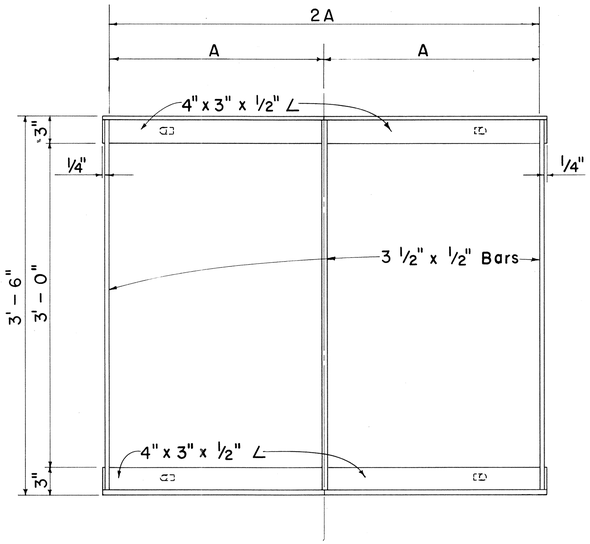

PLAN
Scale: 1 1/2" = 1'-0"

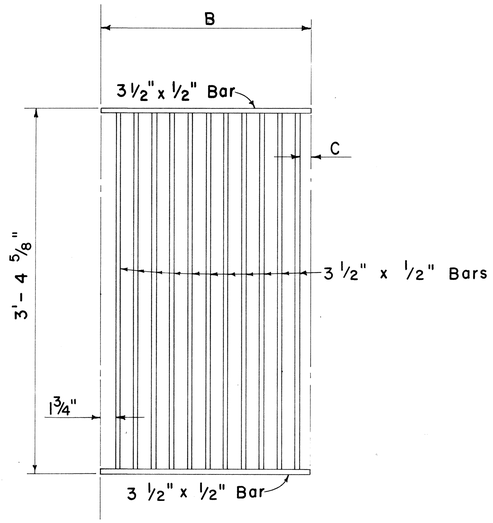

PLAN
Scale: 1 1/2" = 1'-0"

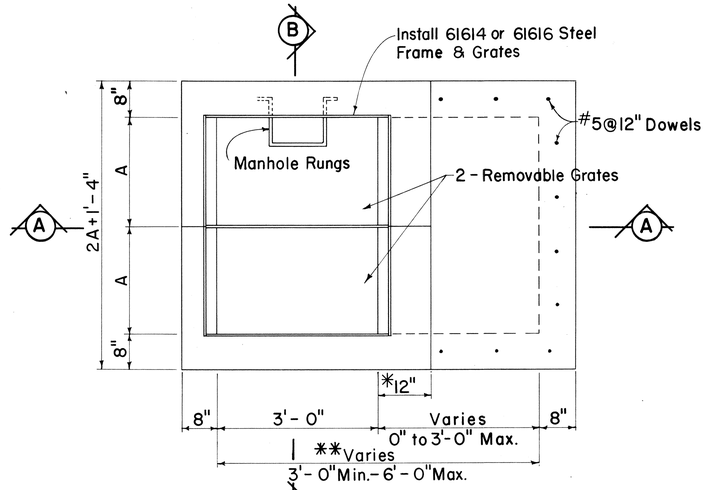

PLAN

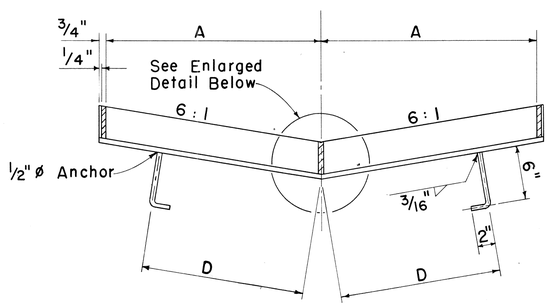

SECTION
Scale: 1 1/2" = 1'-0"

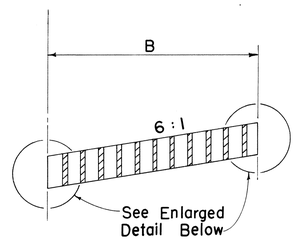

SECTION
Scale: 1 1/2" = 1'-0"

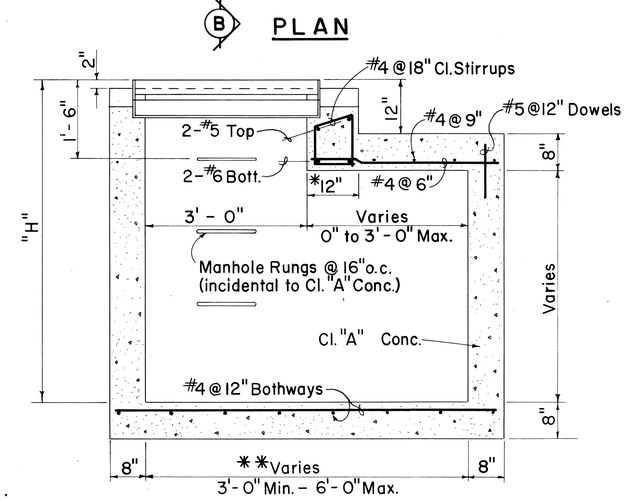

SECTION A - A

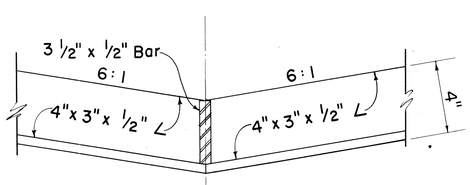

FRAME
Scale: 3" = 1'-0"

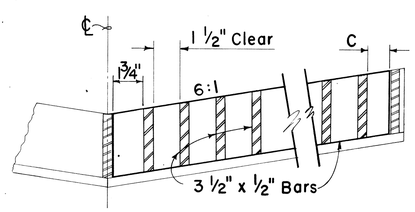

GRATE
Scale: 3" = 1'-0"

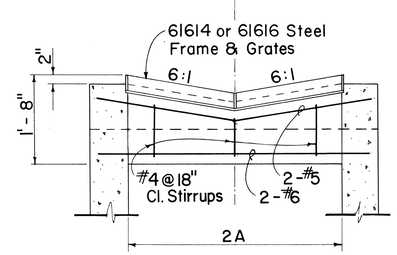

SECTION B - B

DETAILS OF TYPE 61614 OR 61616 STEEL FRAME AND GRATES

DETAILS OF 61614 OR 61616 DROP INTAKE

Scale: 3/4" = 1'-0"

*For Minimum size box of 3'-0", use 8" and eliminate reinforcing steel shown in the top portion.

**For Culverts larger than 30", the minimum dimension shall be D'.

GENERAL NOTES

1. Grates and Frames shall be hot dip galvanized after fabrication, see specifications.
2. All welds 3/8" unless otherwise noted.
3. Refer to "Spacing Table" for Types 61614 & 61616 Drop Intake and Frame & Grates dimensions.
4. The Frame & Grate materials shall conform to the specifications of ASTM Designation Structural Steel A283, Grade D and the Standard Specifications.
5. Culvert shall leave Drop Intake from any position and any direction indicated by plans or ordered by the Engineer. Culverts may both enter and leave Drop Intake so that Drop Intake will act as manhole.
6. Manhole Rungs (16" o.c.) are required when "H" is greater than 4 feet 6 inches. Only one rung (12 inches from the bottom) is required if "H" is 4 feet 6 inches or less. Manhole Rungs may be placed at any location as ordered by the Engineer.

SPACING TABLE

TYPE	NO. BARS	A	B	C	D
61614	11	2'-0"	1'-11 1/2"	1 1/4"	1'-6"
61616	17	3'-0"	2'-11 1/2"	1 1/8"	2'-0"

NO.	REVISION	APPROVED BY	DATE

APPROVAL RECOMMENDED:
T. Takano — 12-17-69
HYDRAULIC DESIGN ENGINEER — DATE

APPROVED:
[signature] — 12-17-69
ASSISTANT CHIEF, ENGINEERING — DATE

STATE OF HAWAII
DEPARTMENT OF TRANSPORTATION
HIGHWAYS DIVISION
STANDARD DETAILS
TYPE 61614 & 61616
GRATED DROP INTAKES

Scales: As Noted — Date: Feb. 1969

SHEET No. 30 OF 34 SHEETS — DH 8

ORIGINAL PLAN	SURVEY PLOTTED BY	DATE
	DRAWN BY	"
	TRACED BY	"
NOTE BOOK	DESIGNED BY	"
No.	QUANTITIES BY	"
	CHECKED BY	"

FED. ROAD DIST. NO.	STATE	FED. AID PROJ. NO.	FISCAL YEAR	SHEET NO.	TOTAL SHEETS
HAWAII	HAW.	F-078-1(11)	1969	97	258

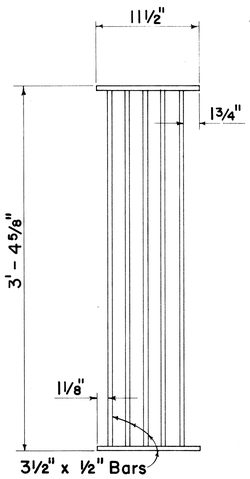

PLAN
Scale: 1½" = 1' - 0"

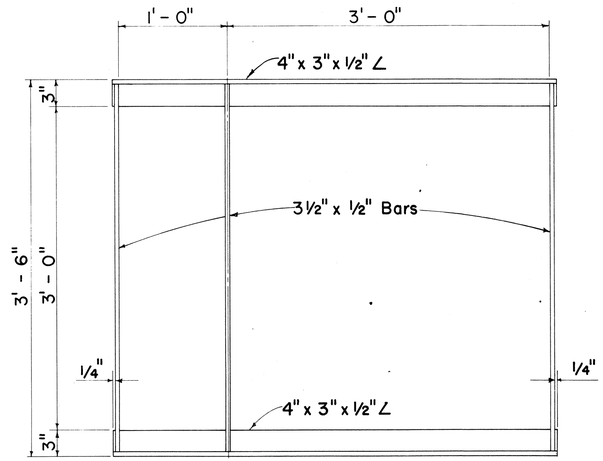

PLAN
Scale: 1½" = 1' - 0"

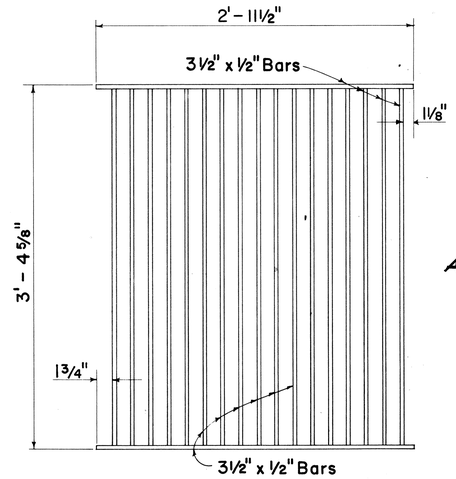

PLAN
Scale: 1½" = 1' - 0"

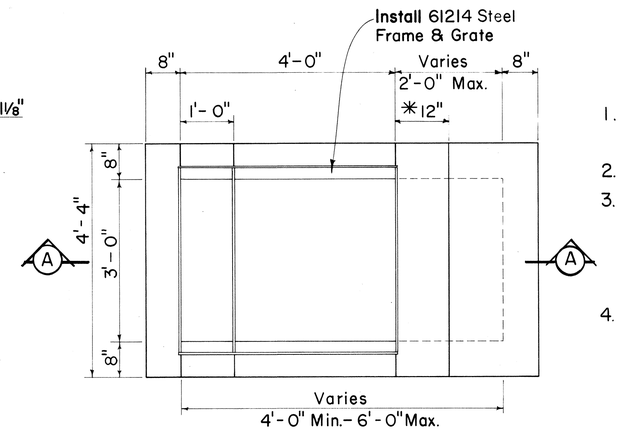

PLAN

GENERAL NOTES

1. Grates and Frames shall be hot dip galvanized after fabrication, see specifications.
2. All welds 3/8" unless otherwise noted.
3. The Frame & Grate materials shall conform to the specifications of ASTM Designation Structural Steel A283, Grade D and the Standard Specifications.
4. Culvert shall leave Drop Intake from any position and any direction indicated by plans or ordered by the Engineer. Culverts may both enter and leave Drop Intake so that Drop Intake will act as manhole.
5. Manhole Rungs (16" o.c.) are required when "H" is greater than 4 feet 6 inches. Only one rung (12 inches from the bottom) is required if "H" is 4 feet 6 inches or less. The Manhole Rungs may be placed at any location as ordered by the Engineer.

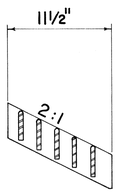

SECTION
Scale: 1½" = 1' - 0"

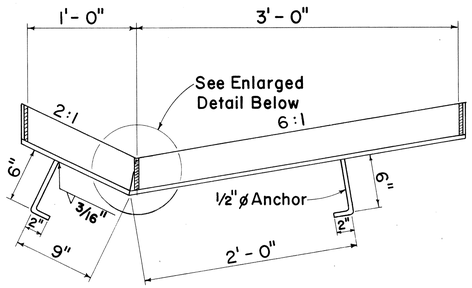

SECTION
Scale: 1½" = 1' - 0"

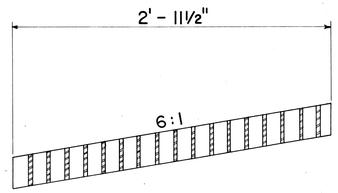

SECTION
Scale: 1½" = 1' - 0"

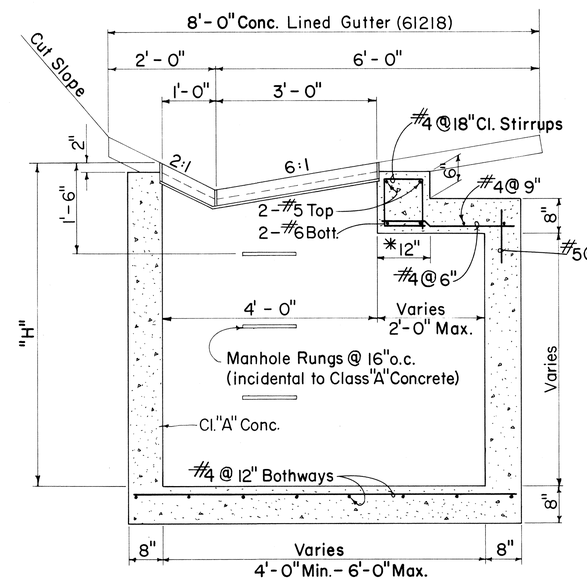

SECTION A - A

DETAIL OF 61214 DROP INTAKE
Scale: 3/4" = 1' - 0"

*For Minimum size box of 4'-0" only, use 8" and eliminate reinforcing steel shown in top portion.

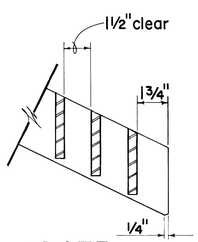

GRATE
Scale: 3" = 1' - 0"

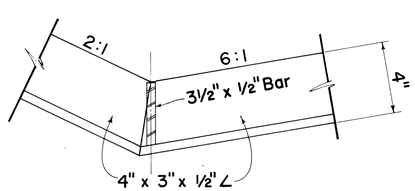

FRAME
Scale: 3" = 1' - 0"

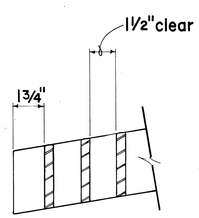

GRATE
Scale: 3" = 1' - 0"

NO.	REVISION	APPROVED BY	DATE

APPROVAL RECOMMENDED:
G. Takano — HYDRAULIC DESIGN ENGINEER — DATE 12-17-69

APPROVED:
[illegible] — ASSISTANT CHIEF, ENGINEERING — DATE 12-17-69

STATE OF HAWAII
DEPARTMENT OF TRANSPORTATION
HIGHWAYS DIVISION

STANDARD DETAILS

TYPE 61214
GRATED DROP INTAKE

Scales: As Noted — Date: July 1969

SHEET No. 31 OF 34 SHEETS — DH 9

DETAILS OF TYPE 61214 STEEL FRAME AND GRATES

ORIGINAL PLAN	SURVEY PLOTTED BY	DATE
	DRAWN BY	"
	TRACED BY	"
NOTE BOOK	DESIGNED BY	"
	QUANTITIES BY	"
No.	CHECKED BY	"

FED. ROAD DIST. NO.	STATE	FED. AID PROJ. NO.	FISCAL YEAR	SHEET NO.	TOTAL SHEETS
HAWAII	HAW.	F-078-1(11)	1969	98	258

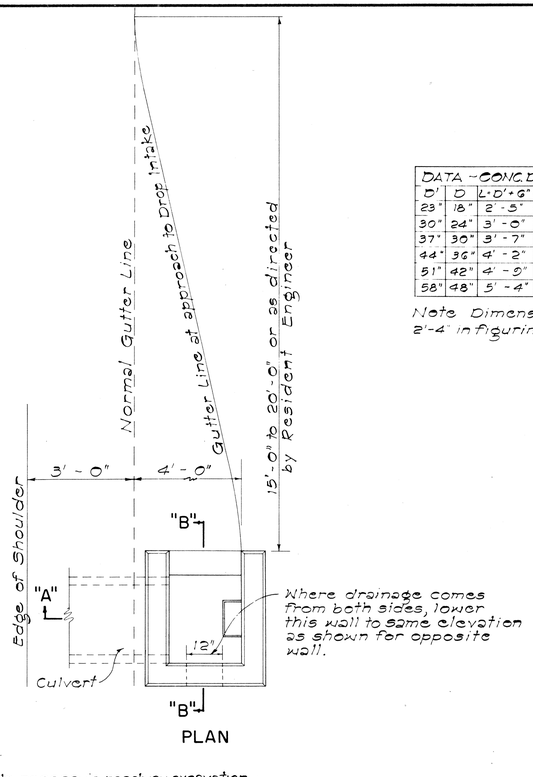

PLAN

DATA - CONC. DROP INTAKE					Where Variable Equals
D'	D	L=D'+6'	S	Cu Yds	
23"	18"	2'-5"	8"	1.41	4'-6"
30"	24"	3'-0"	8"	1.72	5'-0"
37"	30"	3'-7"	9"	2.32	5'-6"
44"	36"	4'-2"	9"	2.73	6'-0"
51"	42"	4'-9"	10"	3.54	6'-6"
58"	48"	5'-4"	10"	4.01	7'-0"

Note Dimension "X" is assumed as 2'-4" in figuring the above quantities.

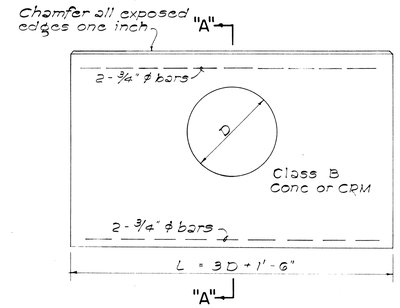

ELEVATION

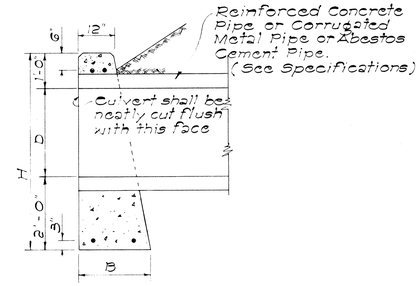

SECTION "A-A"

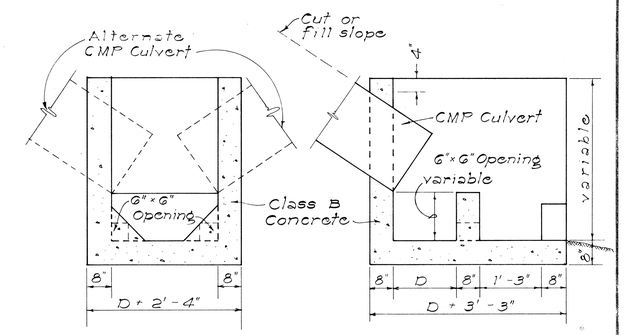

SECTION "C-C" SECTION "D-D"

DATA FOR CONC. HEADWALL				Cl. B CONC. FOR R.C.P.	Cl. B CONC. FOR C.M.P.	Steel For One Headwall			
D	B	L	H	Cu. Yd.	Cu. Yd.	No. of Bars	Size	Length	Lbs.
18"	1'-6"	6'-0"	4'-6"	1.12	1.17	4	3/4" ϕ	5'-6"	33
24"	1'-6"	7'-6"	5'-0"	1.52	1.60	4	3/4" ϕ	7'-0"	42
30"	2'-0"	9'-0"	5'-6"	2.36	2.49	4	3/4" ϕ	8'-6"	51
36"	2'-0"	10'-6"	6'-0"	2.94	3.13	4	3/4" ϕ	10'-0"	60
42"	2'-6"	12'-0"	6'-6"	4.19	4.47	4	3/4" ϕ	11'-6"	69
48"	2'-6"	13'-6"	7'-0"	5.01	5.36	4	3/4" ϕ	13'-0"	78

DATA - MASONRY HEADWALL				CRM FOR R.C.P.	CRM FOR C.M.P.
D	B	L	H	Cu Yd.	Cu Yd.
18"	1'-9"	6'-0"	4'-6"	1.24	1.29
24"	2'-0"	7'-6"	5'-0"	1.83	1.92
30"	2'-3"	9'-0"	5'-6"	2.56	2.70
36"	2'-6"	10'-6"	6'-0"	3.45	3.66

DETAIL OF HEADWALL

Scale: 1/2" = 1'-0"

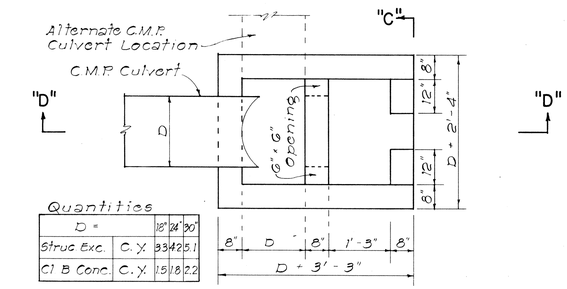

Quantities

D =		18"	24"	30"
Struc Exc.	C.Y.	9.3	14.2	5.1
Cl B Conc.	C.Y.	1.5	1.8	2.2

PLAN

DETAILS OF CONC. DROP BOX AT OUTLET OF CULVERT PIPE

NOT TO SCALE

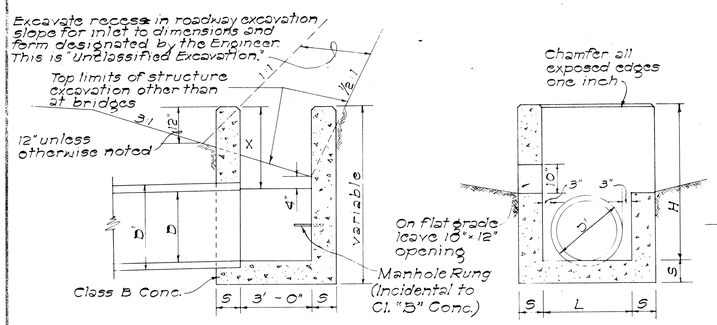

SECTION "A-A"

SECTION "B-B"

DETAIL OF CONCRETE DROP INTAKE

Scale: 1/2" = 1'-0"

GENERAL NOTES

1. Culvert shall enter and leave Drop Intake from any position and in the direction indicated by the plans or ordered by the Engineer.
2. D' shall be the maximum outside dimension of the culvert at the Drop Intake wall.
3. Manhole Rungs (16" o.c.) are required when "H" is greater than 4 feet 6 inches. Only one rung (12 inches from the bottom) is required if "H" is 4 feet 6 inches or less. Manhole Rungs maybe placed at any location as ordered by the Engineer.

Note
When subgrade is below top of jacket, it shall be fully compacted to this line and then re-excavated (struc. exc.) to proper subgrade. This surface shall be rolled again.

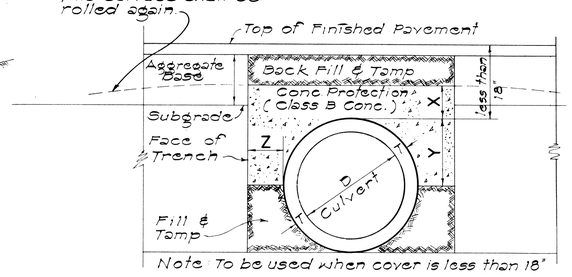

DATA FOR CONCRETE PROTECTION OVER CULVERTS		
X	Y	Z
6" for 18" D	$\frac{D}{2} + T$	Z must be from pipe to face of trench
7" for 24" D		
8" for 30" D		Minimum = X
9" for 36" D		
10" for 42" D		Maximum pay quantity will be Z = 12"
11" for 48" D		
12 for 54" D		

SECT. OF CULVERT WITH CONC. PROTECTION

Scale: 1" = 1'-0"

APPROVAL RECOMMENDED:

T. Takamo — 12-17-69

HYDRAULIC DESIGN ENGINEER — DATE

APPROVED:

[signature] — 12-17-69

ASSISTANT CHIEF, ENGINEERING — DATE

NO.	REVISION	APPROVED BY	DATE

STATE OF HAWAII
DEPARTMENT OF TRANSPORTATION
HIGHWAYS DIVISION

STANDARD DETAILS

DROP INTAKE, HEADWALL & CONCRETE PROTECTION

Scale: As Noted — Date: Aug. 1967

SHEET No. 32 OF 34 SHEETS — DH 10

ORIGINAL PLAN | SURVEY PLOTTED BY | DRAWN BY | TRACED BY | DESIGNED BY | QUANTITIES BY | CHECKED BY | DATE | NOTE BOOK | No.

98

FED. ROAD DIST. NO	STATE	FED. AID PROJ. NO.	FISCAL YEAR	SHEET NO	TOTAL SHEETS
HAWAII	HAW.	F-078-1(11)	1969	99	258

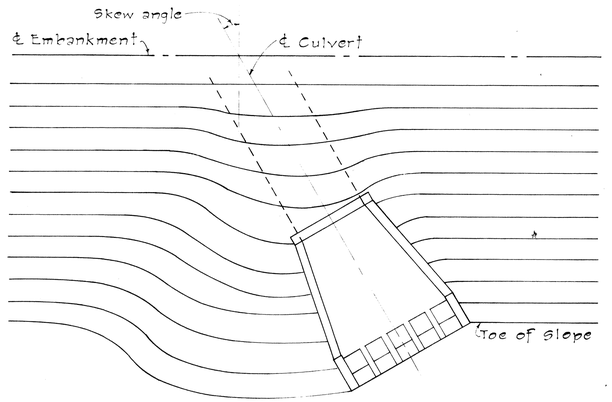

EMBANKMENT CONTOURS FOR SKEWED OUTLET

When outlet is skewed to embankment slope, the embankment may be contoured to cover the exposed section of wall and pipe.

SUMMARY OF QUANTITIES		
Culvert Dia. (inches)	Concrete (Cu. Yd.)	Reinf. Steel (Lbs.)
48		
54		
60		
72		
84	12.7	1270
96	16.2	1570
108	20.3	2010
120	24.8	2460
144	41.8	3610
180	63.8	7090

Note: Quantities shown are for C.M.P. culvert.

GENERAL NOTES

1. Concrete: All concrete shall be Class A.
2. Cutoff Wall: The depth of wall shown on the plan may be reduced if rock is encountered at a higher elevation.
3. Multiple Pipe Installations: To permit careful placing and tamping of back fill material, clear spacing for multiple pipe installations shall be not less than one-half the diameter of the larger pipe between sides of adjacent pipes, but not required to exceed three feet.
4. Anchor Bolts: Anchor bolts are not required for concrete pipe.

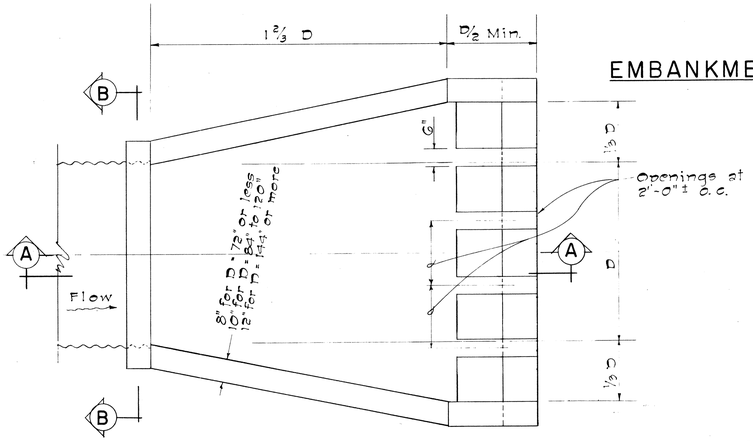

PLAN

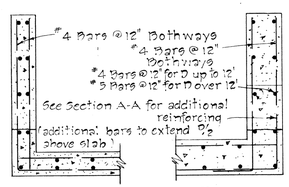

8" WING WALL 10" TO 12" WING WALLS

SECTION C-C

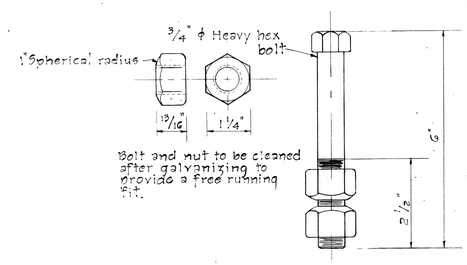

ANCHOR BOLT DETAIL

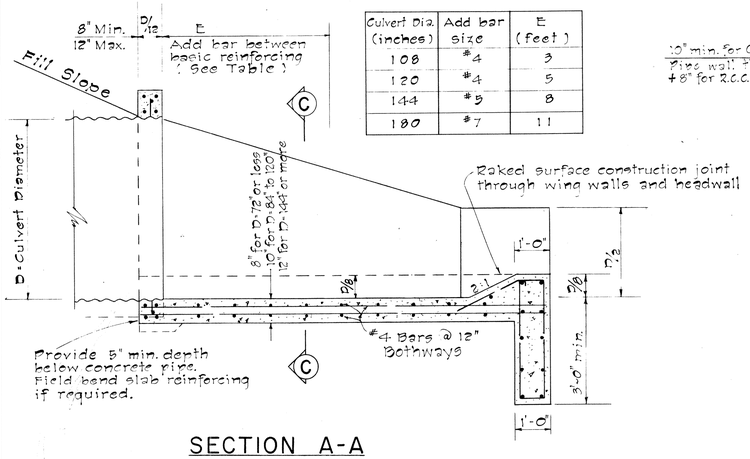

Culvert Dia. (inches)	Add bar size	E (feet)
108	#4	3
120	#4	5
144	#5	8
180	#7	11

SECTION A-A

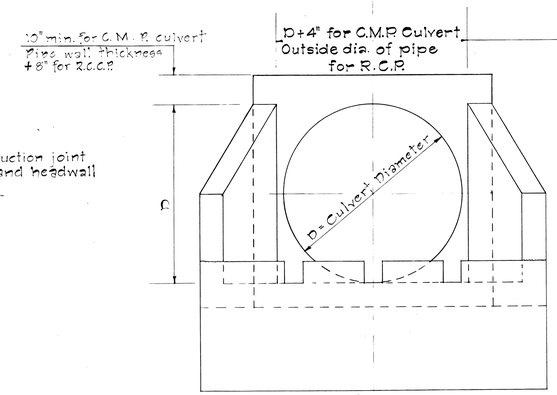

FRONT ELEVATION

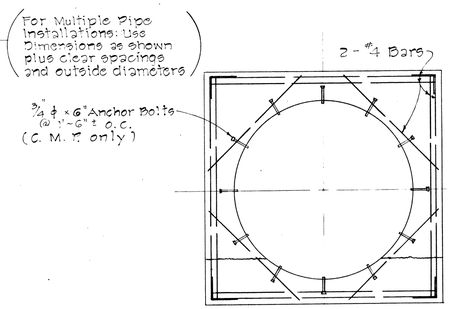

SECTION B-B

OUTLET STRUCTURE FOR CULVERT SIZES 48 IN. TO 180 IN. DIAMETER

NO.	REVISION	APPROVED BY	DATE

APPROVAL RECOMMENDED: S. Takano — HYDRAULIC DESIGN ENGINEER — DATE 12-17-69

APPROVED: Walter Baldwin — ASSISTANT CHIEF, ENGINEERING — DATE 12-17-69

STATE OF HAWAII
DEPARTMENT OF TRANSPORTATION
HIGHWAYS DIVISION
STANDARD DETAILS
OUTLET STRUCTURES

Not To Scale Date: July, 1969

SHEET No. 33 OF 34 SHEETS DH 15

ORIGINAL PLAN	
NOTE BOOK	
No.	

SURVEY PLOTTED BY	
DRAWN BY	
TRACED BY	
DESIGNED BY	
QUANTITIES BY	
CHECKED BY	
DATE	

FED. ROAD DIST. NO.	STATE	FED. AID PROJ. NO.	FISCAL YEAR	SHEET NO.	TOTAL SHEETS
HAWAII	HAW.	F078-1(11)	1969	100	258

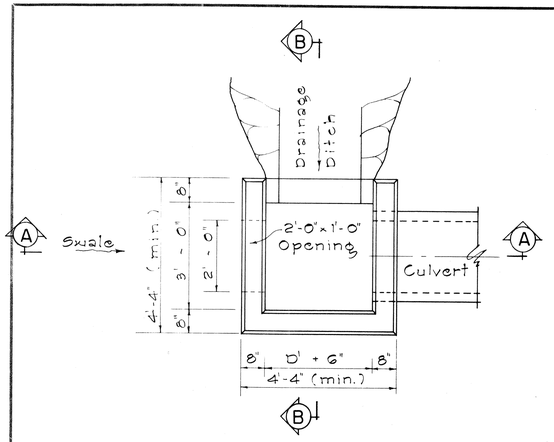

PLAN

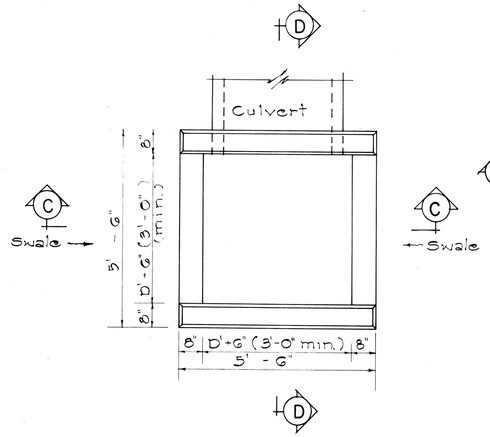

PLAN

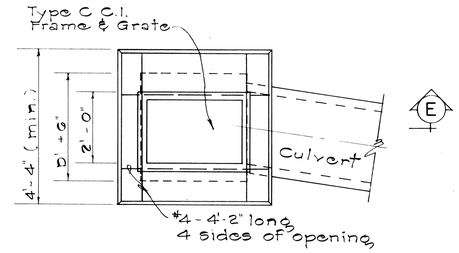

PLAN

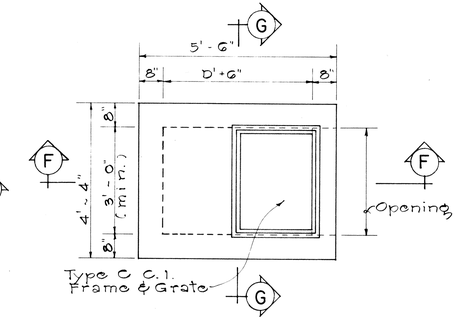

PLAN

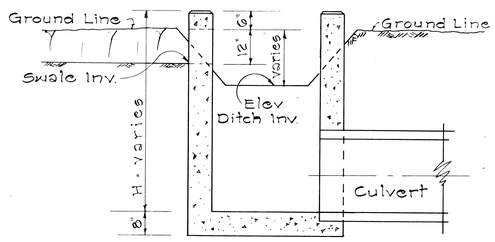

SECTION "A-A"

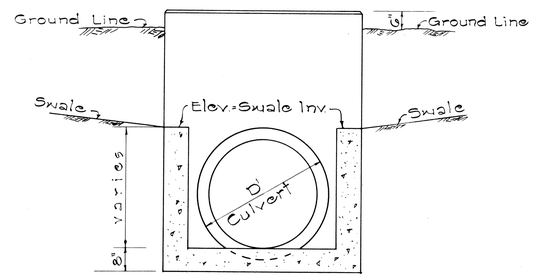

SECTION "C-C"

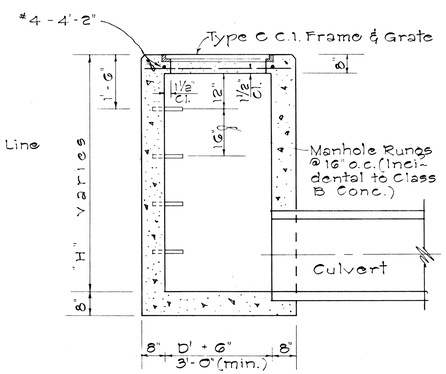

SECTION "E-E"

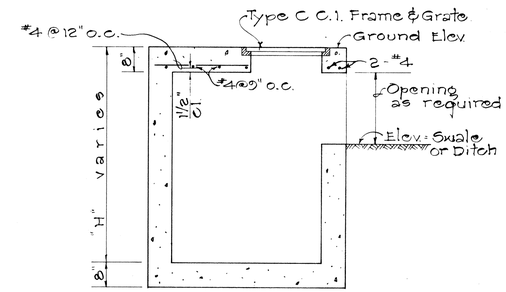

SECTION "F-F"

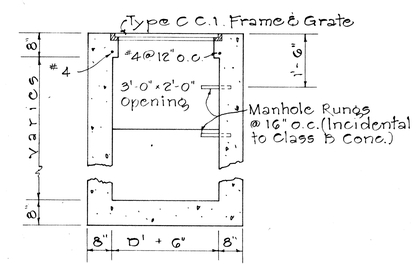

SECTION "G-G"

GENERAL NOTES

1. All concrete shall be Class "B" unless otherwise noted.
2. Exposed edges of all drainage structures shall be chamfered one inch.
3. Culvert shall enter and leave Drop Intake from any position and in the direction indicated by the plans or ordered by the Engineer.
4. Manhole Rungs (16" o.c.) are req'd. when "H" is greater than 4'-6". Only one rung (12 inches from the bottom) is required if "H" is 4'-6" or less. Manhole Rungs maybe placed at any location as ordered by the Engineer.

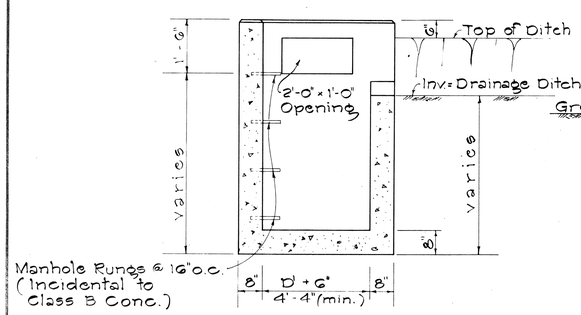

SECTION "B-B"

TYPE "A" CONCRETE DROP INTAKE

Scale: 1/2" = 1'-0"

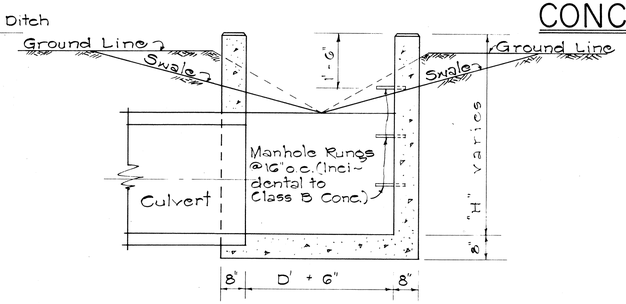

SECTION "D-D"

TYPE "B" CONCRETE DROP INTAKE

Scale: 1/2" = 1'-0"

TYPE "C" GRATED CONCRETE DROP INTAKE

Scale: 1/2" = 1'-0"

TYPE "D" GRATED CONCRETE DROP INTAKE

Scale: 1/2" = 1'-0"

APPROVAL RECOMMENDED: 12-17-69
HYDRAULIC DESIGN ENGINEER — DATE

APPROVED: 12-17-69
ASSISTANT CHIEF, ENGINEERING — DATE

NO.	REVISION	APPROVED BY	DATE

STATE OF HAWAII
DEPARTMENT OF TRANSPORTATION
HIGHWAYS DIVISION

STANDARD DETAILS
TYPE "A", "B", "C", AND "D" CONCRETE DROP INTAKE

Scale: As Noted — Date: July, 1969

SHEET No. 34 OF 34 SHEETS — DH19

ORIGINAL PLAN — SURVEY PLOTTED BY / DRAWN BY / TRACED BY / DESIGNED BY / QUANTITIES BY / CHECKED BY — DATE — NOTE BOOK No.