FED. ROAD DIST. NO.	STATE	PROJ. NO.	FISCAL YEAR	SHEET NO.	TOTAL SHEETS
HAWAII	HAW.	IM-H2-1(33)	2007	27	168

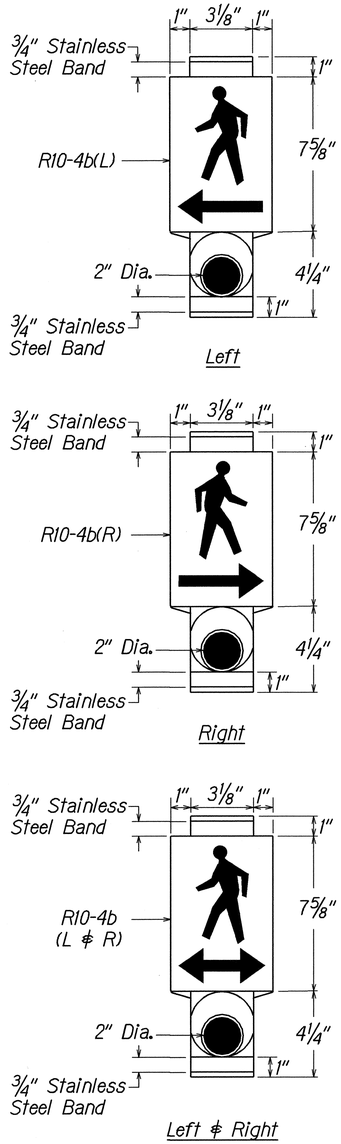

PEDESTRIAN PUSH BUTTON WITH SIGN

Man, Arrow & Push Button - White
Background - Black

NOTE:
Arrowhead to be installed in proper direction.

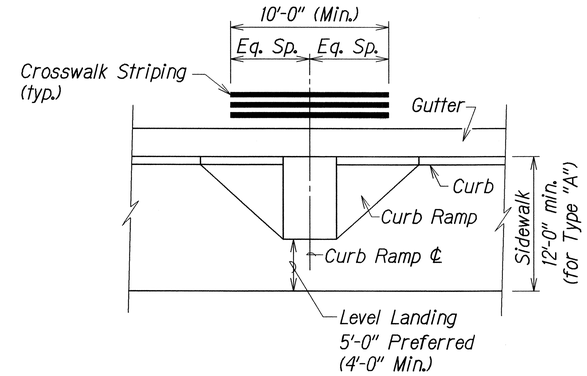

TYPICAL CROSSWALK STRIPING AT CURB RAMP

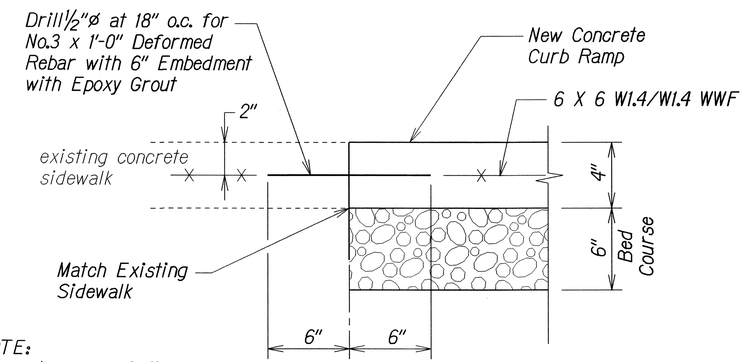

NOTE:
All curb ramps shall be reinforced.

TYPICAL CONSTRUCTION JOINT AT EXISTING SIDEWALK

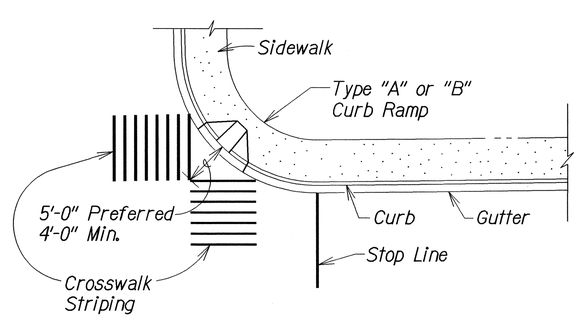

TYPICAL CROSSWALK STRIPING AT DIAGONAL CURB RAMP

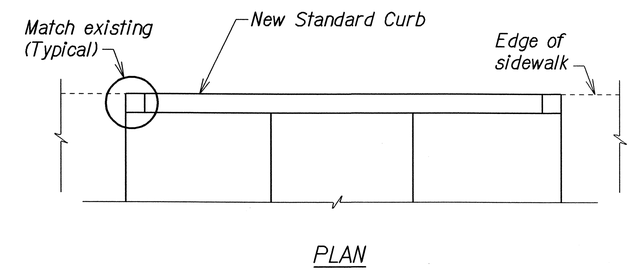

PLAN

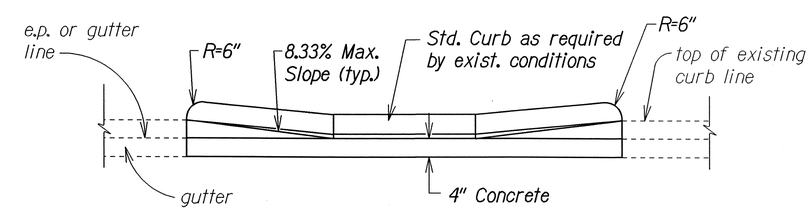

ELEVATION

DETAIL - BACK CURB

NOTE:
This detail can be used in situations where the edge of sidewalk cannot be flush with the face of (back) curb due to right of way restrictions.

STATE OF HAWAII
DEPARTMENT OF TRANSPORTATION
HIGHWAYS DIVISION

MISCELLANEOUS DETAILS

INTERSTATE ROUTE H-2 REHABILITATION
Waipio Interchange & Mililani Interchange
On/Off Ramps, Ka Uka Blvd. & Meheula Parkway
Overpasses, & Kipapa Stream Bridge
Federal Aid Project No. IM-H2-1(33)

Not to Scale — Date: December, 2006

SHEET No. 1 OF 1 SHEETS

ORIGINAL PLAN	SURVEY PLOTTED BY	DATE
	DRAWN BY	
	TRACED BY	
NOTE BOOK	DESIGNED BY	
	QUANTITIES BY	
	CHECKED BY	

tdl/usr2/traffic/std/curbrampmisc.dgn

R 01-18-02 TE-XX sht. 6 of 6