DATE	REVISION
01/19/93	Pipe size changed, depth of GDI changed

DRAINAGE SUMMARY

PROJECT: INTERSTATE ROUTE H-2 HOV LANES, PH. II
Mililani Interchange to Waipio Interchange

F.A.I. PROJECT NO.: IR-H2-1(27)

FED. ROAD DIST. NO.	STATE	FED. AID PROJ. NO.	FISCAL YEAR	SHEET NO.	TOTAL SHEETS
HAWAII	HAW.	IR-H2-1(27)	1992	92	223

ITEM NO.		206. 1000	207. 0100	503. 0000	602. 1020	603. 2085	603. 2087	603. 2089	604. 4810	604. 4820	604. 5000	604. 5004	604. 5005	604. 5006	604. 5007	604. 5010	604. 5104	604. 5105	604. 5108	604. 5201	604. 5203	604. 5205	604. 5206	604. 5207	604. 5304	604. 5305	604. 5306	604. 5400	604. 5500	604. 5600	604. 5700	604. 5800	640. 2100	640. 2105		
UNIT USED		C.Y.	C.Y.	C.Y.	LB.	L.F.	L.F.	L.F.	EA.	EA.	EA.	EA.	EA.	EA.	EA.	EA.	EA.	EA.	EA.	EA.	EA.	EA.	EA.	EA.	EA.	EA.	EA.	EA.	EA.	EA.	EA.	EA.	L.F.	L.F.		
STRUCTURE	STATION	STRUCTURE EXCAVATION OTHER THAN AT BRIDGES	DITCH AND CHANNEL EXCAVATION	CLASS "A" CONCRETE OTHER THAN IN BRIDGES	REINFORCING STEEL FOR DRAINAGE SYSTEM	24-INCH CORRUGATED STEEL PIPE SHT. "t" = 0.109"	30-INCH CORRUGATED STEEL PIPE SHT. "t" = 0.109"	36-INCH CORRUGATED STEEL PIPE SHT. "t" = 0.109"	REMOVING, CLEANING, AND RETURNING MANHOLE CAST IRON FRAMES AND COVERS TO 727 KAKOI ST. HONOLULU, HAWAII	REMOVING, CLEANING, AND RETURNING STEEL FRAMES AND GRATES TO 727 KAKOI ST. HONOLULU, HAWAII	MODIFY EXISTING A-12 STEEL FRAME AND GRATE	TYPE 61614 GDI 4.00 FT. TO 4.99 FT.	TYPE 61614 GDI 5.00 FT. TO 5.99 FT.	TYPE 61614 GDI 6.00 FT. TO 6.99 FT.	TYPE 61614 GDI 7.00 FT. TO 7.99 FT.	TYPE 61614 GDI 10.00 FT. TO 10.99 FT.	TYPE 61616 GDI 4.00 FT. TO 4.99 FT.	TYPE 61616 GDI 5.00 FT. TO 5.99 FT.	TYPE 61616 GDI 8.00 FT. TO 8.99 FT.	TYPE 61614-M GDI 1.00 FT. TO 1.99 FT.	TYPE 61614-M GDI 3.00 FT. TO 3.99 FT.	TYPE 61614-M GDI 5.00 FT. TO 5.99 FT.	TYPE 61614-M GDI 6.00FT TO 6.99 FT.	TYPE 61614-M GDI 7.00FT TO 7.99 FT.	TYPE 61616-M GDI 4.00FT TO 4.99 FT.	TYPE 61616-M GDI 5.00FT TO 5.99 FT.	TYPE 61616-M GDI 6.00FT TO 6.99 FT.	TYPE 61614-N GDI	TYPE 61616-O GDI	TYPE "X" SDMH	TYPE "Y" SDMH	TYPE "K" CDI	2' x 1.5' (SS 1:1) LINED TRAPEZOIDAL DRAINAGE DITCH	SPILLWAY		
Type 61616-M GDI	℄ Sta 194+00																								1											
Type 61616-M GDI	℄ Sta 197+00																									1										
Type 61616-M GDI	I.B. ℄ Sta 200+00 LT																									1										
Type 61616-M GDI	I.B. ℄ Sta 203+00 LT																										1									
Type 61614-M GDI	I.B. ℄ Sta 206+00 LT																						1													
Type 61614-M GDI	I.B. ℄ Sta 209+00 LT																						1													
Type 61614-N GDI	O.B. ℄ Sta 209+00 LT								1																			1								
Type 61614 GDI	O.B. ℄ Sta 211+75 LT	7						6						1																						
Type "Y" SDMH	O.B. ℄ Sta 211+75 o/s 52' LT								1																						1					
Type 61616-O GDI	I.B. ℄ Sta 212+40 LT																												1							
Type 61614 GDI	O.B. ℄ Sta 214+98 LT	11				11			1				1																							
Type 61616-M GDI	I.B. ℄ Sta 215+25 LT																										1									
Type 61614 GDI	O.B. ℄ Sta 218+00 LT	7				7			1				1																							
A-12 FRAME AND GRATE	O.B. ℄ Sta 218+00 RT										3																									
Type 61614 GDI	O.B. ℄ Sta 220+50 LT	3				3			1				1																							
A-12 FRAME AND GRATE	O.B. ℄ Sta 220+50 RT										2																									
A-12 FRAME AND GRATE	O.B. ℄ Sta 223+00 RT										2																									
A-12 FRAME AND GRATE	O.B. ℄ Sta 224+80 RT										3																									
A-12 FRAME AND GRATE	℄ Sta 246+55 RT										1																									
Type 61614-M GDI	℄ Sta 248+00 LT									1												1														
Type 61614 GDI	℄ Sta 249+00 LT	1				2			1				1																							
A-12 FRAME AND GRATE	℄ Sta 249+00										1																									
Type 61614-M GDI	℄ Sta 249+00 RT																					1														
A-12 FRAME AND GRATE	℄ Sta 252+00										1																									
Type "X" SDMH	℄ Sta 252+00 o/s 62' RT																													1						
Type 61614 GDI	℄ Sta 252+00 RT												1																							
A-12 FRAME AND GRATE	℄ Sta 254+00										1																									

SHEET No. H01 OF 42 SHEETS

ORIGINAL PLAN — NOTE BOOK No. — SURVEY PLOTTED BY — DRAWN BY — TRACED BY — DESIGNED BY — QUANTITIES BY — CHECKED BY — DATE

C.O. 92

FED. ROAD DIST. NO.	STATE	FED. AID PROJ. NO.	FISCAL YEAR	SHEET NO.	TOTAL SHEETS
HAWAII	HAW.	IR-H2-1(27)	1992	93	223

DRAINAGE SUMMARY

PROJECT: INTERSTATE ROUTE H-2 HOV LANES, PH. II
Mililani Interchange to Waipio Interchange

F.A.I. PROJECT NO.: IR-H2-1(27)

DATE	REVISION
01/19/93	Pipe size changed.

ITEM NO.		206.	207.	503.	602.	603.	603.	603.	604.	604.	604.	604.	604.	604.	604.	604.	604.	604.	604.	604.	604.	604.	604.	604.	604.	604.	604.	604.	604.	604.	604.	604.	604.	640.	640.		
		1000	0100	0000	1020	2085	2087	2089	4810	4820	5000	5004	5005	5006	5007	5010	5104	5105	5108	5201	5203	5205	5206	5207	5304	5305	5306	5400	5500	5600	5700	5800	2100	2105		
UNIT USED		C.Y.	C.Y.	C.Y.	LB.	L.F.	L.F.	L.F.	EA.	EA.	EA.	EA.	EA.	EA.	EA.	EA.	EA.	EA.	EA.	EA.	EA.	EA.	EA.	EA.	EA.	EA.	EA.	EA.	EA.	EA.	EA.	EA.	L.F.	L.F.		
STRUCTURE	STATION	STRUCTURE EXCAVATION OTHER THAN AT BRIDGES	DITCH AND CHANNEL EXCAVATION	CLASS "A" CONCRETE OTHER THAN IN BRIDGES	REINFORCING STEEL FOR DRAINAGE SYSTEM	24-INCH CORRUGATED STEEL PIPE SHT. "t" = 0.109"	30-INCH CORRUGATED STEEL PIPE SHT. "t" = 0.109"	36-INCH CORRUGATED STEEL PIPE SHT. "t" = 0.109"	REMOVING, CLEANING, AND RETURNING MANHOLE CAST IRON FRAMES AND COVERS TO 727 KAKOI ST. HONOLULU, HAWAII	REMOVING, CLEANING, AND RETURNING STEEL FRAMES AND GRATES TO 727 KAKOI ST. HONOLULU, HAWAII	MODIFY EXISTING A-12 STEEL FRAME AND GRATE	TYPE 61614 GDI 4.00 FT. TO 4.99 FT.	TYPE 61614 GDI 5.00 FT. TO 5.99 FT.	TYPE 61614 GDI 6.00 FT. TO 6.99 FT.	TYPE 61614 GDI 7.00 FT. TO 7.99 FT.	TYPE 61614 GDI 10.00 FT. TO 10.99 FT.	TYPE 61616 GDI 4.00 FT. TO 4.99 FT.	TYPE 61616 GDI 5.00 FT. TO 5.99 FT.	TYPE 61616 GDI 8.00 FT. TO 8.99 FT.	TYPE 61614-M GDI 1.00 FT. TO 1.99 FT.	TYPE 61614-M GDI 3.00 FT. TO 3.99 FT.	TYPE 61614-M GDI 5.00 FT. TO 5.99 FT.	TYPE 61614-M GDI 6.00FT TO 6.99 FT.	TYPE 61614-M GDI 7.00FT TO 7.99 FT.	TYPE 61616-M GDI 4.00FT TO 4.99 FT.	TYPE 61616-M GDI 5.00FT TO 5.99 FT.	TYPE 61616-M GDI 6.00FT TO 6.99 FT.	TYPE 61614-N GDI	TYPE 61616-O GDI	TYPE "X" SDMH	TYPE "Y" SDMH	TYPE "K" CDI	2' x 1.5' (SS 1:1) LINED TRAPEZOIDAL DRAINAGE DITCH	SPILLWAY		
Type "X" SDMH	℄ Sta 254+50 o/s 62' RT																													1						
Type 61614 GDI	℄ Sta 254+50 RT	4						5				1																								
Type "X" SDMH	℄ Sta 257+00 o/s 62' RT																													1						
Type 61614 GDI	℄ Sta 257+00 RT	6					7					1																								
STANDARD CONCRETE HEADWALL	℄ Sta 259+10 o/s 96' LT	5		1	34																															
Type 61616 GDI	℄ Sta 259+25 LT	26				38											1																			
Type "X" SDMH	℄ Sta 259+50 o/s 62' RT																													1						
Type 61614 GDI	℄ Sta 259+50 RT	6					7					1																								
Type 61614 GDI	℄ Sta 262+00 LT	216				275						1																								
Type "X" SDMH	℄ Sta 262+00 o/s 62' RT									1																				1						
Type 61614 GDI	℄ Sta 262+00 RT	6						7					1																							
Type "X" SDMH	℄ Sta 264+50 o/s 62' RT									1																				1						
Type 61614 GDI	℄ Sta 264+50 RT	6						7					1																							
Type "X" SDMH	℄ Sta 267+00 o/s 62' RT									1																				1						
Type 61614 GDI	℄ Sta 267+00 RT	6						7					1																							
Type 61614 GDI	℄ Sta 272+96 LT															1																				
Type "X" SDMH	℄ Sta 273+00 o/s 58' LT																													1						
Type 61614 GDI	℄ Sta 273+00 RT	12				14							1																							
Type 61614 GDI	℄ Sta 275+50 LT	13				14							1																							
Type "X" SDMH	℄ Sta 275+50 o/s 58' RT																													1						
Type 61614 GDI	℄ Sta 275+50 RT	9						9					1																							
Type 61614 GDI	℄ Sta 278+00 LT	11				14						1																								
Type "X" SDMH	℄ Sta 278+00 o/s 58' RT																													1						
Type 61614 GDI	℄ Sta 278+00 RT	8					9					1																								
Type "X" SDMH	℄ Sta 280+00 o/s 58' RT																													1						
Type 61614 GDI	℄ Sta 280+00 RT	7					9					1																								
Type "X" SDMH	℄ Sta 282+50 o/s 50' RT																													1						

ORIGINAL PLAN	SURVEY PLOTTED BY	DATE
	DRAWN BY	
	TRACED BY	
NOTE BOOK	DESIGNED BY	
	QUANTITIES BY	
No.	CHECKED BY	

C.O. 93

DATE	REVISION
07/22/94	Type 6 MDI added.
01/19/93	Pipe size changed, depth of GDI changed.

DRAINAGE SUMMARY

PROJECT: INTERSTATE ROUTE H-2 HOV LANES, PH. II
Mililani Interchange to Waipio Interchange

F.A.I. PROJECT NO.: IR-H2-1(27)

FED. ROAD DIST. NO.	STATE	FED. AID PROJ. NO.	FISCAL YEAR	SHEET NO.	TOTAL SHEETS
HAWAII	HAW.	IR-H2-1(27)	1992	94	223

ITEM NO.		206.	207.	503.	602.	603.	603.	603.	604.	604.	604.	604.	604.	604.	604.	604.	604.	604.	604.	604.	604.	604.	604.	604.	604.	604.	604.	604.	604.	604.	604.	604.	640.	640.
		1000	0100	0000	1020	2085	2087	2089	4810	4820	5000	5004	5005	5006	5007	5010	5104	5105	5108	5201	5203	5205	5206	5207	5304	5305	5306	5400	5500	5600	5700	5800	5904	2100	2105
UNIT USED		C.Y.	C.Y.	C.Y.	LB.	L.F.	L.F.	L.F.	EA.	EA.	EA.	EA.	EA.	EA.	EA.	EA.	EA.	EA.	EA.	EA.	EA.	EA.	EA.	EA.	EA.	EA.	EA.	EA.	EA.	EA.	EA.	EA.	EA.	L.F.	L.F.
STRUCTURE	STATION	STRUCTURE EXCAVATION OTHER THAN AT BRIDGES	DITCH AND CHANNEL EXCAVATION	CLASS "A" CONCRETE OTHER THAN IN BRIDGES	REINFORCING STEEL FOR DRAINAGE SYSTEM	24-INCH CORRUGATED STEEL PIPE SHT. "t" = 0.109"	30-INCH CORRUGATED STEEL PIPE SHT. "t" = 0.109"	36-INCH CORRUGATED STEEL PIPE SHT. "t" = 0.109"	REMOVING, CLEANING, AND RETURNING MANHOLE CAST IRON FRAMES AND COVERS TO 727 KAKOI ST. HONOLULU, HAWAII	REMOVING, CLEANING, AND RETURNING STEEL FRAMES AND GRATES TO 727 KAKOI ST. HONOLULU, HAWAII	MODIFY EXISTING A-12 STEEL FRAME AND GRATE	TYPE 61614 GDI 4.00 FT. TO 4.99 FT.	TYPE 61614 GDI 5.00 FT. TO 5.99 FT.	TYPE 61614 GDI 6.00 FT. TO 6.99 FT.	TYPE 61614 GDI 7.00 FT. TO 7.99 FT.	TYPE 61614 GDI 10.00 FT. TO 10.99 FT.	TYPE 61616 GDI 4.00 FT. TO 4.99 FT.	TYPE 61616 GDI 5.00 FT. TO 5.99 FT.	TYPE 61616 GDI 8.00 FT. TO 8.99 FT.	TYPE 61614-M GDI 1.00 FT. TO 1.99 FT.	TYPE 61614-M GDI 3.00 FT. TO 3.99 FT.	TYPE 61614-M GDI 5.00 FT. TO 5.99 FT.	TYPE 61614-M GDI 6.00FT TO 6.99 FT.	TYPE 61614-M GDI 7.00FT TO 7.99 FT.	TYPE 61616-M GDI 4.00FT TO 4.99 FT.	TYPE 61616-M GDI 5.00FT TO 5.99 FT.	TYPE 61616-M GDI 6.00FT TO 6.99 FT.	TYPE 61614-N GDI	TYPE 61616-O GDI	TYPE "X" SDMH	TYPE "Y" SDMH	TYPE "K" CDI	TYPE 6 MDI 4.00 FT. TO 4.99 FT.	2' x 1.5' (SS 1:1) LINED TRAPEZOIDAL DRAINAGE DITCH	SPILLWAY
Type 61614 GDI	℄ Sta 282+50 RT	7					9					1																						
Type "X" SDMH	℄ Sta 285+00 o/s 57' RT																													1				
Type 61614 GDI	℄ Sta 285+00 RT	8					9					1																						
STANDARD CONCRETE HEADWALL	O.B. ℄ Sta 297+90 o/s 86' LT	5		1	34																													
Type 61614 GDI	O.B. ℄ Sta 297+90 LT	12				14								1																				
SPILLWAY	I.B. ℄ Sta 300+50 RT		7																															50
Type 61614 GDI	O.B. ℄ Sta 303+00 LT											1																						
Type 61614 GDI	O.B. ℄ Sta 306+50 LT	330				348						1																						
Type 61614 GDI	O.B. ℄ Sta 309+98 ± LT												1																					
2x1.5 LINED TRAP. DRAINAGE DITCH	O.B. ℄ Sta 313+00 o/s 35' ±RT		130																														500	
SPILLWAY	O.B. ℄ Sta 316+50 LT		7																															50
Type 61614 GDI	I.B. ℄ Sta 317+75 RT	408				425				1			1																					
Type 61614 GDI	I.B. ℄ Sta 322+00 RT	16				22							1																					
STANDARD CONCRETE HEADWALL	I.B. ℄ Sta 322+00 o/s 59' RT	5		1	34																													
CONCRETE DROP INLET COVER	O.B. ℄ Sta 323+00 RT			1	97																													
Type 61614 GDI	O.B. ℄ Sta 328+00 RT	4				6				1		1																						
CONCRETE DROP INLET COVER	O.B. ℄ Sta 328+90 o/s 28' ±RT			1	74																													
Type 61614-M GDI	I.B. ℄ Sta 329+75 RT																			1														
Type 61614 GDI	O.B. ℄ Sta 337+50 RT	231				250							1																					
Type 61614 GDI	I.B. ℄ Sta 338+00 LT	231				250							1																					
Type 61614 GDI	O.B. ℄ Sta 340+00 RT	270				265							1																					
Type 61614 GDI	I.B. ℄ Sta 340+50 LT	224				242							1																					
Type 61616 GDI	O.B. ℄ Sta 342+65 RT																	1																
Type 61616 GDI	I.B. ℄ Sta 342+92 LT	10				10												1																
Type 6 MDI	O.B. ℄ Sta 348+50 RT																															1		
Type 61614-M GDI	I.B. ℄ Sta 352+25 RT																						1											
Type 61614-M GDI	O.B. ℄ Sta 355+75 LT																					1												

ORIGINAL PLAN	SURVEY PLOTTED BY ____ DATE ____
	DRAWN BY ____
	TRACED BY ____
NOTE BOOK	DESIGNED BY ____
	QUANTITIES BY ____
No. ____	CHECKED BY ____

C.O. 94

FED. ROAD DIST. NO.	STATE	FED. AID PROJ. NO.	FISCAL YEAR	SHEET NO.	TOTAL SHEETS
HAWAII	HAW.	IR-H2-1(27)	1992	95	223

DRAINAGE SUMMARY

PROJECT: INTERSTATE ROUTE H-2 HOV LANES, PH. II
Mililani Interchange to Waipio Interchange

F.A.I. PROJECT NO.: IR-H2-1(27)

DATE	REVISION
01/19/93	Pipe size changed, depth of GDI changed.

ITEM NO.		206.	207.	503.	602.	603.	603.	603.	604.	604.	604.	604.	604.	604.	604.	604.	604.	604.	604.	604.	604.	604.	604.	604.	604.	604.	604.	604.	604.	604.	604.	604.	640.	640.		
		1000	0100	0000	1020	2085	2087	2089	4810	4820	5000	5004	5005	5006	5007	5010	5104	5105	5108	5201	5203	5205	5206	5207	5304	5305	5306	5400	5500	5600	5700	5800	2100	2105		
UNIT USED		C.Y.	C.Y.	C.Y.	LB.	L.F.	L.F.	L.F.	EA.	EA.	EA.	EA.	EA.	EA.	EA.	EA.	EA.	EA.	EA.	EA.	EA.	EA.	EA.	EA.	EA.	EA.	EA.	EA.	EA.	EA.	EA.	EA.	L.F.	L.F.		
STRUCTURE	STATION	STRUCTURE EXCAVATION OTHER THAN AT BRIDGES	DITCH AND CHANNEL EXCAVATION	CLASS "A" CONCRETE OTHER THAN IN BRIDGES	REINFORCING STEEL FOR DRAINAGE SYSTEM	24-INCH CORRUGATED STEEL PIPE SHT. "t" = 0.109"	30-INCH CORRUGATED STEEL PIPE SHT. "t" = 0.109"	36-INCH CORRUGATED STEEL PIPE SHT. "t" = 0.109"	REMOVING, CLEANING, AND RETURNING MANHOLE CAST IRON FRAMES AND COVERS TO 727 KAKOI ST. HONOLULU, HAWAII	REMOVING, CLEANING, AND RETURNING STEEL FRAMES AND GRATES TO 727 KAKOI ST. HONOLULU, HAWAII	MODIFY EXISTING A-12 STEEL FRAME AND GRATE	TYPE 61614 GDI 4.00 FT. TO 4.99 FT.	TYPE 61614 GDI 5.00 FT. TO 5.99 FT.	TYPE 61614 GDI 6.00 FT. TO 6.99 FT.	TYPE 61614 GDI 7.00 FT. TO 7.99 FT.	TYPE 61614 GDI 10.00 FT. TO 10.99 FT.	TYPE 61616 GDI 4.00 FT. TO 4.99 FT.	TYPE 61616 GDI 5.00 FT. TO 5.99 FT.	TYPE 61616 GDI 8.00 FT. TO 8.99 FT.	TYPE 61614-M GDI 1.00 FT. TO 1.99 FT.	TYPE 61614-M GDI 3.00 FT. TO 3.99 FT.	TYPE 61614-M GDI 5.00 FT. TO 5.99 FT.	TYPE 61614-M GDI 6.00FT TO 6.99 FT.	TYPE 61614-M GDI 7.00FT TO 7.99 FT.	TYPE 61616-M GDI 4.00FT TO 4.99 FT.	TYPE 61616-M GDI 5.00FT TO 5.99 FT.	TYPE 61616-M GDI 6.00FT TO 6.99 FT.	TYPE 61614-N GDI	TYPE 61616-O GDI	TYPE "X" SDMH	TYPE "Y" SDMH	TYPE "K" CDI	2' x 1.5' (SS 1:1) LINED TRAPEZOIDAL DRAINAGE DITCH	SPILLWAY		
Type 61614-M GDI	I.B. ℄ Sta 355+75 RT																						1													
A-12 FRAME AND GRATE	O.B. ℄ Sta 365+00 RT										4																									
A-12 FRAME AND GRATE	O.B. ℄ Sta 366+50 RT										4																									
CONCRET DROP INLET COVER	O.B. ℄ Sta 377+00 o/s 20' ±RT			1	97																															
Type 61614-M GDI	O.B. ℄ Sta 380+00 RT									1												1														
Type 61614-M GDI	O.B. ℄ Sta 383+00 RT									1										1																
2x1.5 LINED TRAP. DRAINAGE DITCH	O.B. ℄ Sta 383+00 o/s 66' RT																																400			
Type "X" SDMH	O.B. ℄ Sta 386+00																													1						
Type 61614 GDI	O.B. ℄ Sta 386+00 RT	5						4						1																						
Type "K" CDI	O.B. ℄ Sta 386+00 o/s 68' RT					57																										1				
Type 61614 GDI	I.B. ℄ Sta 387+00 LT	8						6							1																					
Type "X" SDMH	I.B. ℄ Sta 387+00 o/s 36' LT									1																				1						
Type 61614 GDI	I.B. ℄ Sta 390+00 LT	6						6					1																							
Type "X" SDMH	I.B. ℄ Sta 390+00 o/s 36' LT									1																				1						
Type 61614 GDI	I.B. ℄ Sta 393+00 LT	6						5					1																							
Type "X" SDMH	I.B. ℄ Sta 393+00 o/s 36' LT									1																				1						
Type 61614 GDI	O.B. ℄ Sta 394+00 RT	10				11							1																							
Type 61614-M GDI	I.B. ℄ Sta 396+00 LT									1											1															
Type 61616 GDI	O.B. ℄ Sta 399+70 RT																		1																	

SURVEY PLOTTED BY
DRAWN BY
TRACED BY
DESIGNED BY
QUANTITIES BY
CHECKED BY
DATE
ORIGINAL PLAN
REVISED PLAN
NOTE BOOK
No.

FED. ROAD DIST. NO.	STATE	FED. AID PROJ. NO.	FISCAL YEAR	SHEET NO.	TOTAL SHEETS
HAWAII	HAW.	IR-H2-1(27)	1992	96	223

DRAINAGE SUMMARY

PROJECT: INTERSTATE ROUTE H-2 HOV LANES, PH.II
Mililani Interchange to Waipio Interchange

F.AJ. PROJECT NO.: IR-H2-1(27)

ITEM NO.		609. 2616	609. 2618	609. 2620
UNIT USED		L.F.	L.F.	L.F.
GUTTERS FROM	TO	GUTTER, TYPE 2(6)(6)	GUTTER, TYPE 2(6)(8)	MEDIAN GUTTER
INBOUND STATION				
℄ Sta 246+10 RT	℄ Sta 270+50 RT		2440	
℄ Sta 270+50 RT	℄ Sta 287+95 RT	1745		
℄ Sta 287+95 RT	℄ Sta 300+50 RT		1255	
I.B. ℄ Sta 309+52 LT	I.B. ℄ Sta 316+65 LT		713	
I.B. ℄ Sta 313+50 RT	I.B. ℄ Sta 329+75 RT	1625		
I.B. ℄ Sta 330+00 LT	I.B. ℄ Sta 342+92 LT		1292	
I.B. ℄ Sta 348+95 RT	I.B. ℄ Sta 357+20 RT		825	
I.B. ℄ Sta 370+50 LT	I.B. ℄ Sta 373+55 LT		305	
I.B. ℄ Sta 380+00 LT	I.B. ℄ Sta 400+92 LT		2092	
OUTBOUND STATION				
O.B. ℄ Sta 208+68.95 LT	O.B. ℄ Sta 222+40 LT		1371	
℄ Sta 246+10 LT	℄ Sta 252+75 LT		665	
℄ Sta 259+20 LT	℄ Sta 269+75 LT		1055	
℄ Sta 269+75 LT	℄ Sta 278+02 LT	827		
℄ Sta 291+50 LT	O.B. ℄ Sta 316+50 LT	2500		
O.B. ℄ Sta 310+00 RT	O.B. ℄ Sta 342+65 RT		3265	
O.B. ℄ Sta 347+38 LT	O.B. ℄ Sta 357+20 LT		982	
O.B. ℄ Sta 378+70 RT	O.B. ℄ Sta 399+70 RT		2100	
MEDIAN GUTTER				
℄ Sta 190+90	I.B. ℄ Sta 215+50			2460

ITEM NO.		652. 0020	652. 0022	652. 3050
UNIT USED		L.F.	L.F.	L.F.
EDGEDRAINS FROM	TO	6-INCH PERFORATED PIPE FOR EDGEDRAIN	6-INCH NONPERFORATED PIPE FOR EDGEDRAIN	EDGEDRAIN
INBOUND STATION				
℄ Sta 190+90	I.B. ℄ Sta 206+00 LT	1510	45	1510
℄ Sta 248+00 RT	℄ Sta 270+00 RT	2200	85	2200
℄ Sta 271+00 RT	℄ Sta 287+00 RT	1600	48	1600
I.B. ℄ Sta 313+50 RT	I.B. ℄ Sta 329+75 RT	1625	15	1625
I.B. ℄ Sta 330+00 LT	O.B. ℄ Sta 348+50 RT	1850	40	1850
I.B. ℄ Sta 348+90 RT	I.B. ℄ Sta 355+75 RT	685	20	685
I.B. ℄ Sta 363+51 LT	I.B. ℄ Sta 366+50 LT	299		299
OUTBOUND STATION				
O.B. ℄ Sta 209+00 LT	O.B. ℄ Sta 214+98 LT	598	20	598
O.B. ℄ Sta 214+00	O.B. ℄ Sta 224+80 LT	1080		1080
℄ Sta 246+55	℄ Sta 262+00	1545		1545
℄ Sta 271+00 LT	℄ Sta 278+00 LT	700	15	700
℄ Sta 291+50 LT	O.B. ℄ Sta 309+98±LT	1848	93	1848
O.B. ℄ Sta 321+60 RT	O.B. ℄ Sta 328+00 RT	640	5	640
O.B. ℄ Sta 347+38 LT	O.B. ℄ Sta 355+75 LT	837	5	837

ITEM NO.	652. 2000
UNIT USED	EA.
CLEANOUTS	CLEANOUTS
INBOUND STATION	
℄ Sta 270+00 RT	1
℄ Sta 271+00 RT	1
I.B. ℄ Sta 313+50 RT	1
I.B. ℄ Sta 363+51 LT	1
OUTBOUND STATION	
O.B. ℄ Sta 214+00	1
℄ Sta 255+40	1
℄ Sta 271+00 LT	1
℄ Sta 291+50 LT	1
O.B. ℄ Sta 321+60 RT	1
O.B. ℄ Sta 347+38 LT	1

ITEM NO.	616. 3910
UNIT USED	EA.
IRRIGATION SYSTEM	VALVE BOX WITH STEEL FRAME & COVER
℄ Sta 191+40±	1

ITEM NO.		654. 0022	654. 3050
UNIT USED		L.F.	L.F.
TRANSVERSE DRAINS	DRAIN TYPE	6-INCH NONPERFORATED PIPE FOR TRANSVERSE DRAIN	TRANSVERSE DRAINS
℄ Sta 194+00	A	7	9
℄ Sta 197+00	A	7	9
I.B. ℄ Sta 200+00 LT	A	7	9
I.B. ℄ Sta 203+00 LT	A	7	9
I.B. ℄ Sta 206+00 LT	A	7	9
I.B. ℄ Sta 209+00 LT	A	7	9
I.B. ℄ Sta 212+40 LT	B	2	18
O.B. ℄ Sta 214+98 LT	C	3	19
I.B. ℄ Sta 215+25 LT	B	2	18
O.B. ℄ Sta 218+00 LT	C	3	16
O.B. ℄ Sta 218+00 RT	D	10	18
O.B. ℄ Sta 220+50 LT	C	3	12
O.B. ℄ Sta 220+50 RT	D	6	17
O.B. ℄ Sta 223+00 RT	D	3	15
O.B. ℄ Sta 224+80 RT	D	3	12
℄ Sta 246+55	E	2	9
℄ Sta 248+00 LT	F	3	9
℄ Sta 249+00 LT	F	3	9
℄ Sta 249+00	E	2	9
℄ Sta 252+00	E	2	9
℄ Sta 254+25 LT	G	10	33
℄ Sta 254+50	E	2	9
℄ Sta 256+50 LT	G	10	33
℄ Sta 257+00	E	2	9
℄ Sta 259+25 LT	H	3	22
℄ Sta 259+50	E	2	9

ITEM NO.		654. 0022	654. 3050
UNIT USED		L.F.	L.F.
TRANSVERSE DRAINS	DRAIN TYPE	6-INCH NONPERFORATED PIPE FOR TRANSVERSE DRAIN	TRANSVERSE DRAINS
℄ Sta 262+00 LT	F	3	21
℄ Sta 282+50 LT	I	2	21
℄ Sta 284+50 LT	I	2	21
℄ Sta 286+50 LT	I	2	21
I.B. ℄ Sta 303+50 RT	J	14	21
I.B. ℄ Sta 305+50 RT	J	16	21
I.B. ℄ Sta 307+50 RT	J	15	21
O.B. ℄ Sta 322+50 LT	I	2	21
O.B. ℄ Sta 325+50 LT	I	2	17
O.B. ℄ Sta 328+50 LT	I	2	11
O.B. ℄ Sta 337+50 RT	K	3	17
O.B. ℄ Sta 340+00 RT	K	3	15
O.B. ℄ Sta 342+65 RT	K	3	13
O.B. ℄ Sta 344+95 RT	L	9	10
O.B. ℄ Sta 348+50 RT	E	2	8

DATE	REVISION
08/14/92	Add Transverse Drains Schedule.

ORIGINAL PLAN
NOTE BOOK No.
SURVEY PLOTTED BY
DRAWN BY
TRACED BY
DESIGNED BY
QUANTITIES BY
CHECKED BY
DATE

FED. ROAD DIST. NO.	STATE	FED. AID PROJ. NO.	FISCAL YEAR	SHEET NO.	TOTAL SHEETS
HAWAII	HAW.	IR-H2-1(27)	1992	97	223

NOTES:

1. Existing drainage systems will be functional at all times during construction. The Contractor is to furnish materials, equipment, labor, tools and incidentals necessary to maintain flow. The cost for this work shall be incidental to the various Contract Items.

2. The Contractor shall verify the locations of all existing culverts, underdrain and utilities in the field. Any existing culverts, underdrains and utilities damaged during construction shall be repaired or replaced by the Contractor at his expense.

3. Demolishing and removing a portion or the existing structure shall not be paid for separately, but shall be considered incidental to the various Contract Items.

4. Only non-pneumatic type of drill as approved by the Engineer will be permitted for drilling holes in concrete. The approximate diameter of drilled holes for installation of dowels shall be 1 1/4 inches. After installing dowels, the voids shall be filled with epoxy grout as directed by the Engineer. Above work shall be considered incidental to the drainage structure.

5. Salvaged Steel Frames and Grates shall be cleaned and returned to 727 Kakoi St., Honolulu, Hawaii 96819.

6. Salvaged C. I. Frames and Covers shall be cleaned, painted and returned to 727 Kakoi St., Honolulu, Hawaii 96819.

7. Concrete shall be Class A unless otherwise noted.

8. For added reinforcing around existing and new culverts, see Standard Plan H-04.

9. Chamfer all exposed concrete edges 1".

10. Existing underdrains shall be made functional by connecting it to existing or new drainage structures. The above work shall be considered incidental to to the various contract items.

11. Project includes 21 existing Type 61614 Steel Frames and Grates and 29 new Type 61614 Steel Frames and Grates. Location of reinstalled existing Type 61614 Steel Frames and Grates are listed below.

REUSE SALVAGED TYPE 61614 FRAME & GRATE	
FROM	TO
I.B. ℄ Sta. 206+00 Lt.	I.B. ℄ Sta. 206+00 Lt.
I.B. ℄ Sta. 209+00 Lt.	I.B. ℄ Sta. 209+00 Lt.
I.B. ℄ Sta. 212+40 Lt.	O.B. ℄ Sta. 211+75 Lt.
℄ Sta. 249+00 Rt.	℄ Sta. 249+00 Rt.
℄ Sta. 252+00 o/s 62' Rt.	℄ Sta. 252+00 Rt.
℄ Sta. 254+50 o/s 62 Rt.	℄ Sta. 254+50 Rt.
℄ Sta. 257+00 o/s 62' Rt.	℄ Sta. 257+00 Rt.
℄ Sta. 259+50 o/s 62 Rt.	℄ Sta. 259+50 Rt.
℄ Sta. 273+00 o/s 58' Lt.	℄ Sta. 272+96 Lt.
℄ Sta. 273+00 o/s 58' Rt.	℄ Sta. 273+00 Rt.
℄ Sta. 275+50 o/s 58' Lt.	℄ Sta. 275+50 Lt.
℄ Sta. 275+50 o/s 58' Rt.	℄ Sta. 275+50 Rt.
℄ Sta. 278+00 o/s 58' Lt.	℄ Sta. 278+00 Lt.
℄ Sta. 278+00 o/s 58' Rt.	℄ Sta. 278+00 Rt.
℄ Sta. 282+00 o/s 58' Rt.	℄ Sta. 280+00 Rt.
℄ Sta. 282+50 o/s 58' Rt.	℄ Sta. 282+50 Rt.
℄ Sta. 285+00 o/s 57' Rt.	℄ Sta. 285+00 Rt.
O.B. ℄ Sta. 303+00 o/s 58' Lt.	O.B. ℄ Sta. 303+00 Lt.
O.B. ℄ Sta. 306+50 o/s 58' Lt.	O.B. ℄ Sta. 306+50 Lt.
O.B. ℄ Sta. 310+00 o/s 58'± Lt.	O.B. ℄ Sta. 309+98± Lt.
I.B. ℄ Sta. 329+75 Rt.	I.B. ℄ Sta. 329+75 Rt.

12. Project includes 5 existing Type 61616 Steel Frames and Grates and 5 new Type 61616 Steel Frames and Grates. Location of reinstalled existing Type 61616 Steel Frames and Grates are listed below.

REUSE SALVAGED TYPE 61616 FRAME & GRATE	
FROM	TO
℄ Sta. 194+00	℄ Sta. 194+00
I.B. ℄ Sta. 197+00 Lt.	I.B. ℄ Sta. 197+00 Lt.
I.B. ℄ Sta. 200+00 Lt.	I.B. ℄ Sta. 200+00 Lt.
I.B. ℄ Sta. 203+00 Lt.	I.B. ℄ Sta. 203+00 Lt.
I.B. ℄ Sta. 215+25 Lt.	I.B. ℄ Sta. 215+25 Lt.

13. Reinstall existing Type A C.I. Frame and Cover to new locations as listed below.

CONCRETE DROP INLET COVER

REUSE SALVAGED TYPE A CAST IRON FRAME & COVER	
FROM	TO
O.B. ℄ Sta. 209+00 Lt.	℄ Sta. 323 Rt.
O.B. ℄ Sta. 211+75 o/s 52' Lt.	℄ Sta. 328+00 o/s 28' Rt.
I.B. ℄ Sta. 215+00 o/s 52' Lt.	℄ Sta. 377+00 o/s 20' Rt.

14. Lined Drained Ditches shall be sloped to drain as shown on plans or as directed by the Engineer. Contractor shall provide a smooth transition from the existing to the new gutter.

15. Cut and plug existing sprinkler lines as shown on plan. Above work shall be considered incidental to the valve box.

16. Disconnect control wiring of electric remote control valves at the field controller as shown on plan. Above work shall be considered incidental to the valve box.

ORIGINAL PLAN	SURVEY PLOTTED BY ____ DATE
	DRAWN BY ____
	TRACED BY ____
NOTE BOOK	DESIGNED BY ____
	QUANTITIES BY ____
	CHECKED BY ____
	No. ____

STATE OF HAWAII
DEPARTMENT OF TRANSPORTATION
HIGHWAYS DIVISION

DRAINAGE NOTES

INTERSTATE RTE. H-2, HOV LANES, PH. II
Mililani Interchange to Waipio Interchange
F.A.I. PROJECT NO. IR-H2-1(27)

Date: Apr., 1992

SHEET No. H06 OF 42 SHEETS

FED. ROAD DIST. NO.	STATE	FED. AID PROJ. NO.	FISCAL YEAR	SHEET NO.	TOTAL SHEETS
HAWAII	HAW.	IR-H2-1(27)	1992	98	223

DATE	REVISION
08/14/92	"Median Swale" changed to "Median Gutter" Transverse Drain added

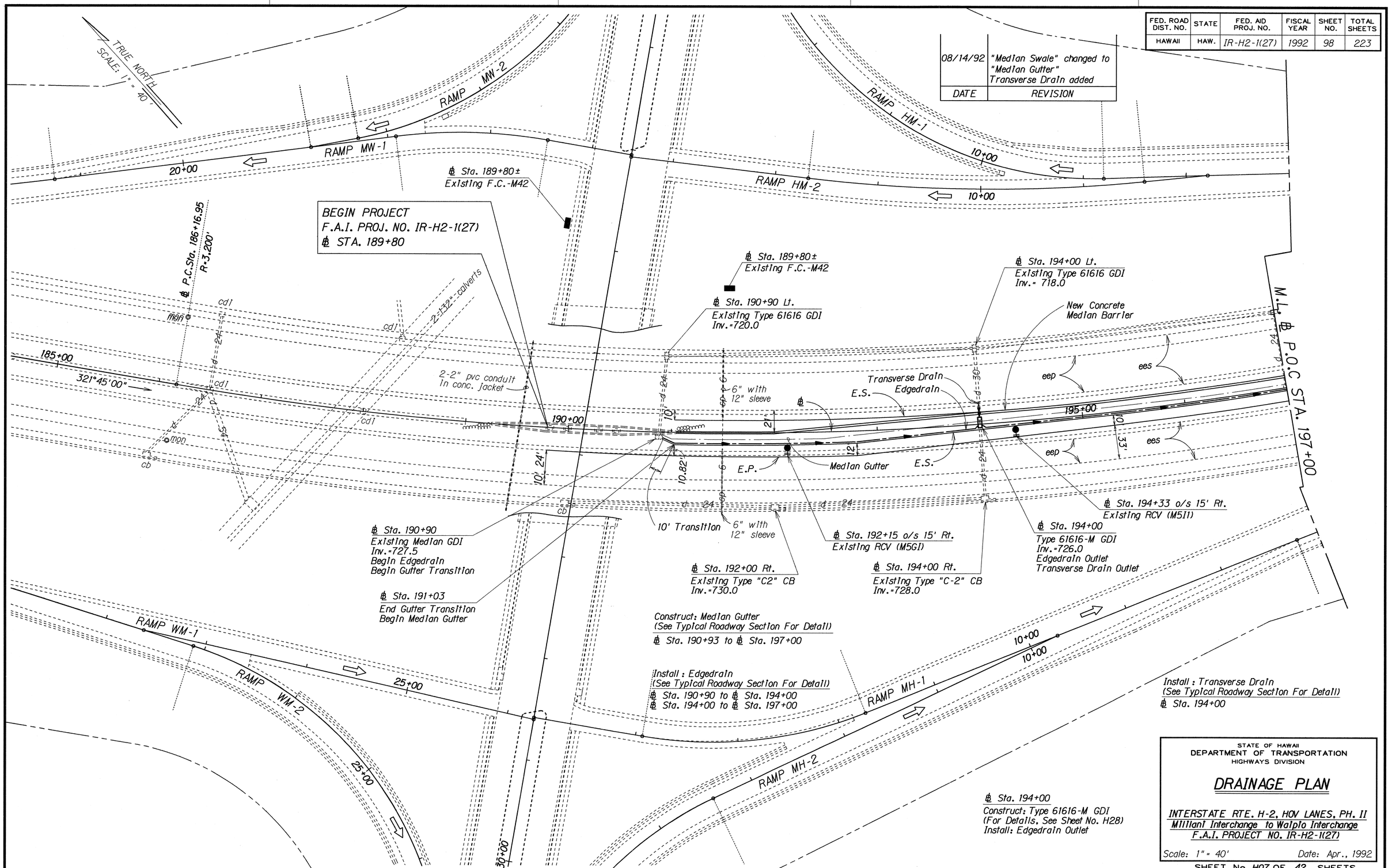

ORIGINAL PLANS	SURVEY PLOTTED BY	DATE
	DRAWN BY	
	TRACED BY	
NOTE BOOK	DESIGNED BY	
	QUANTITIES BY	
No.	CHECKED BY	

STATE OF HAWAII
DEPARTMENT OF TRANSPORTATION
HIGHWAYS DIVISION

DRAINAGE PLAN

INTERSTATE RTE. H-2, HOV LANES, PH. II
Mililani Interchange to Waipio Interchange
F.A.I. PROJECT NO. IR-H2-1(27)

Scale: 1" = 40' Date: Apr., 1992

SHEET No. H07 OF 42 SHEETS

ADD. 98

/usr2/lennox/11h2h07.dgn

FED. ROAD DIST. NO.	STATE	FED. AID PROJ. NO.	FISCAL YEAR	SHEET NO.	TOTAL SHEETS
HAWAII	HAW.	IR-H2-1(27)	1992	99	223

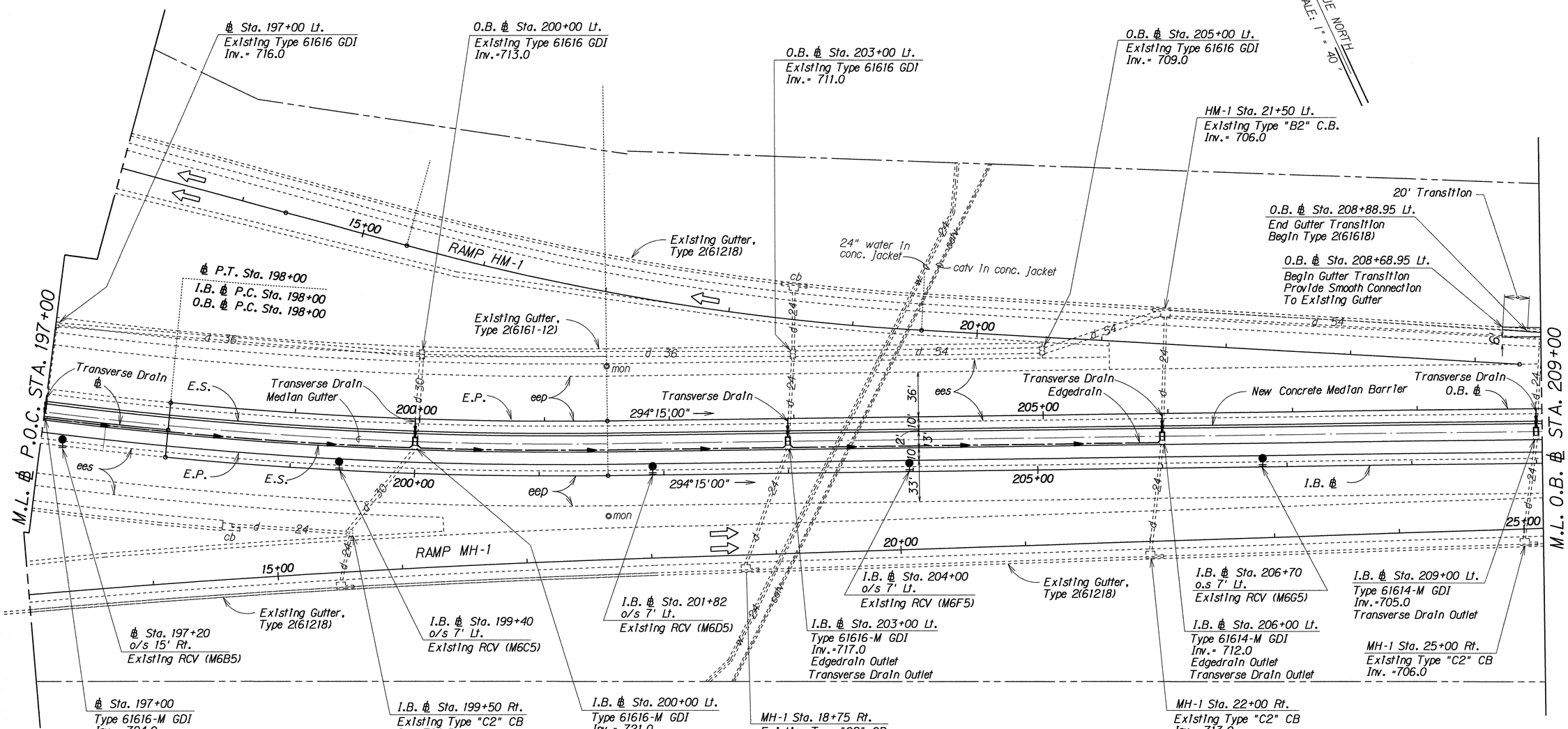

I.B. ℄ Sta. 197+00 Lt.
Construct: Type 61616-M GDI
(For Details, See Sht. No. H28)
Install: Edgedrain Outlet

I.B. ℄ Sta. 200+00 Lt.
Construct: Type 61616-M GDI
(For Details, See Sht. No. H28)
Install: Edgedrain Outlet

Construct: Median Gutter
(See Typical Roadway Section For Detail)
℄ Sta. 197+00 to I.B. Sta. 209+00 Lt.

Install: Edgedrain
(See Typical Roadway Section For Detail)
℄ Sta. 197+00 to I.B. ℄ Sta. 200+00 Lt.
I.B. ℄ Sta. 200+00 Lt. to I.B. ℄ Sta. 203+00 Lt.
I.B. ℄ Sta. 203+00 Lt. to I.B. ℄ Sta. 206+00 Lt.

Construct: Gutter Type 2(61618)
(See Typical Roadway Section For Detail)
O.B. ℄ Sta. 208+68.95 Lt. to O.B. ℄ Sta. 209+00 Lt.

I.B. ℄ Sta. 203+00 Lt.
Construct: Type 61616-M GDI
(For Details, See Sht. No. H28)
Install: Edgedrain Outlet

Install: Transverse Drain
(See Typical Roadway Section For Detail)
℄ Sta. 197+00
I.B. ℄ Sta. 200+00 Lt.
I.B. ℄ Sta. 203+00 Lt.
I.B. ℄ Sta. 206+00 Lt.
I.B. ℄ Sta. 209+00 Lt.

I.B. ℄ Sta. 206+00 Lt.
Construct: Type 61614-M GDI
(For Details, See Sht. No. H25)
Install: Edgedrain Outlet

I.B. ℄ Sta. 209+00 Lt.
Construct: Type 61614-M GDI
(For Details, See Sht. No. H25)

DATE	REVISION
08/14/92	"Median Swale" changed to "Median Gutter" Transverse Drains added Edgedrain removed

STATE OF HAWAII
DEPARTMENT OF TRANSPORTATION
HIGHWAYS DIVISION

DRAINAGE PLAN

INTERSTATE RTE. H-2, HOV LANES, PH. II
Mililani Interchange to Waipio Interchange
F.A.I. PROJECT NO. IR-H2-1(27)

Scale: 1" = 40' Date: Apr., 1992

SHEET No. H08 OF 42 SHEETS

ADD. 99

ORIGINAL PLAN	SURVEY PLOTTED BY	DATE
	DRAWN BY	
	TRACED BY	
NOTE BOOK	DESIGNED BY	
	QUANTITIES BY	
N.	CHECKED BY	

/usr2/lennox/11h2h08.dgn

FED. ROAD DIST. NO.	STATE	FED. AID PROJ. NO.	FISCAL YEAR	SHEET NO.	TOTAL SHEETS
HAWAII	HAW.	IR-H2-1(27)	1992	100	223

Install: Edgedrain
(See Typical Roadway Section For Detail)
O.B. ℄ Sta. 209+00 Lt. to O.B. ℄ Sta. 211+75 Lt.
O.B. ℄ Sta. 211+75 Lt. to O.B. ℄ Sta. 214+98 Lt.
O.B. ℄ Sta. 214+00 to O.B. ℄ Sta. 218+00 Rt.
O.B. ℄ Sta. 218+00 to O.B. ℄ Sta. 220+50 Rt.
O.B. ℄ Sta. 220+50 Rt. to O.B. ℄ Sta. 221+00 Rt.

O.B. ℄ Sta. 209+00 Lt.
Construct: Type 61614-N GDI
(For Details, See Plan Sheet No. H26)

Construct: Gutter Type 2(61618)
(See Typical Roadway Section For Detail)
O.B. ℄ Sta. 209+00 Lt. to O.B. ℄ Sta. 221+00 Lt.

O.B. ℄ Sta. 211+75 Lt.
Construct: Type 61614 GDI
Install: 36" CSP, Sht"t" =0.109"
Edgedrain Outlet

O.B. ℄ Sta. 211+75 o/s 52' Lt.
Construct: Type "Y" SDMH
(For Details, See Sht. No. H32)

O.B. ℄ Sta. 214+98 Lt.
Construct: Type 61614 GDI
Install: 24" CSP, Sht."t" =0.109"
Edgedrain Outlet

O.B. ℄ Sta. 214+00
Install: Cleanout
(For Details, See Sht. No. H37)

O.B. ℄ Sta. 218+00 Lt.
Construct: Type 61614 GDI
Install: 24" CSP Sht."t" =0.109"

O.B. ℄ Sta. 220+50 Lt.
Construct: Type 61614 GDI
Install: 24" CSP, Sht. "t" =0.109"

Install: Transverse Drain
(See Typical Roadway Section For Detail)
I.B. ℄ Sta. 212+40 Lt. O.B. ℄ Sta. 218+00 Rt.
O.B. ℄ Sta. 214+98 Lt. O.B. ℄ Sta. 220+50 Lt.
I.B. ℄ Sta. 215+25 Lt. O.B. ℄ Sta. 220+50 Rt.
O.B. ℄ Sta. 218+00 Lt.

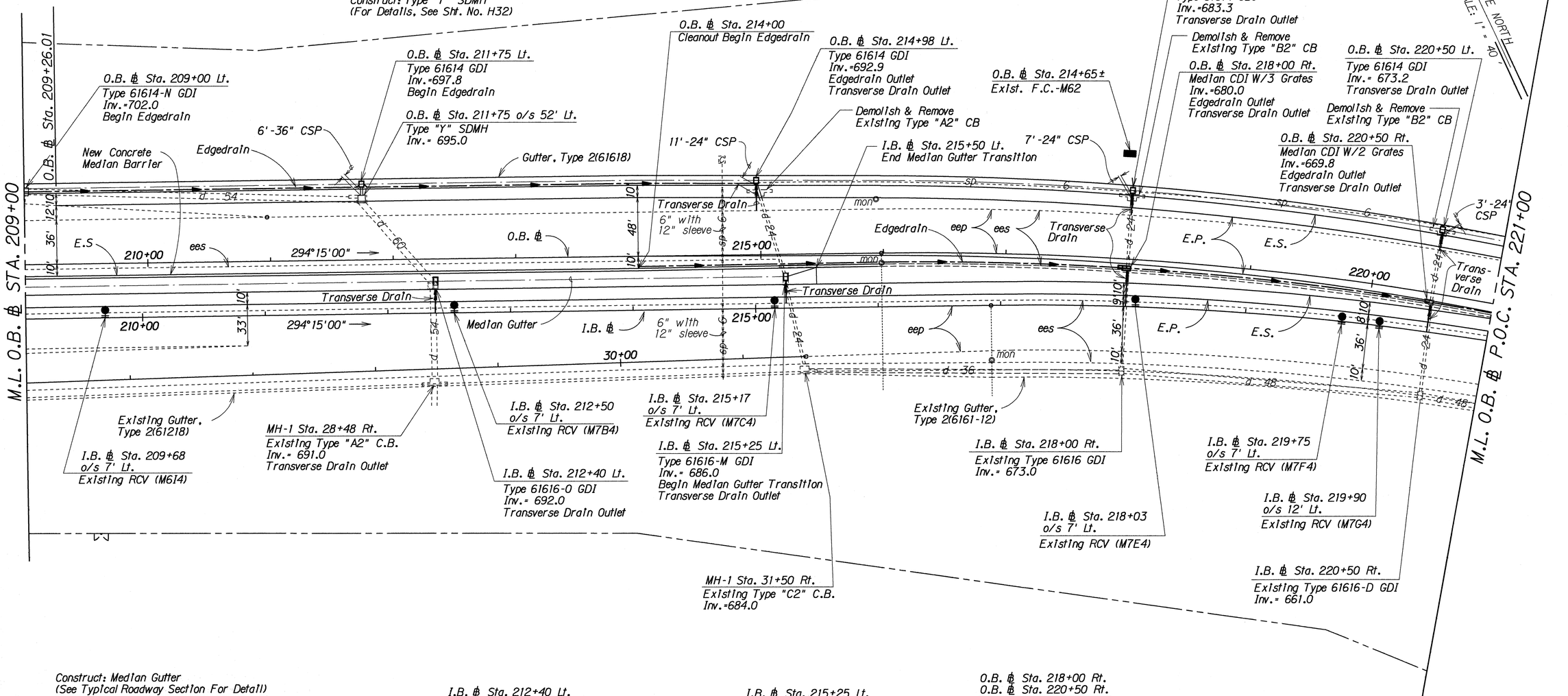

Construct: Median Gutter
(See Typical Roadway Section For Detail)
I.B. ℄ Sta. 209+00 Lt. to I.B. ℄ Sta. 215+50 Lt.

I.B. ℄ Sta. 212+40 Lt.
Construct: Type 61616-O GDI
(For Details, See Sht. No. H29 & H30)

I.B. ℄ Sta. 215+25 Lt.
Construct: Type 61616-M GDI
(For Details, See Sht. No. H28)

O.B. ℄ Sta. 218+00 Rt.
O.B. ℄ Sta. 220+50 Rt.
Construct: Modify Existing Type A-12 Frame & Grates
(For Details, See Sht. No. H39)
Install: Edgedrain Outlet

DATE	REVISION
08/14/92	"Median Swale" changed to "Median Gutter" Transverse Drains added

STATE OF HAWAII
DEPARTMENT OF TRANSPORTATION
HIGHWAYS DIVISION

DRAINAGE PLAN

INTERSTATE RTE. H-2, HOV LANES, PH. II
Mililani Interchange to Waipio Interchange
F.A.I. PROJECT NO. IR-H2-1(27)

Scale: 1" = 40' Date: Apr., 1992

SHEET No. H09 OF 42 SHEETS

ADD. 100

ORIGINAL PLAN | SURVEY PLOTTED BY | DRAWN BY | TRACED BY | DESIGNED BY | QUANTITIES BY | CHECKED BY | DATE | NOTE BOOK | No.

/usr2/lennox/1lh2h09.dgn

FED. ROAD DIST. NO.	STATE	FED. AID PROJ. NO.	FISCAL YEAR	SHEET NO.	TOTAL SHEETS
HAWAII	HAW.	IR-H2-1(27)	1992	101	223

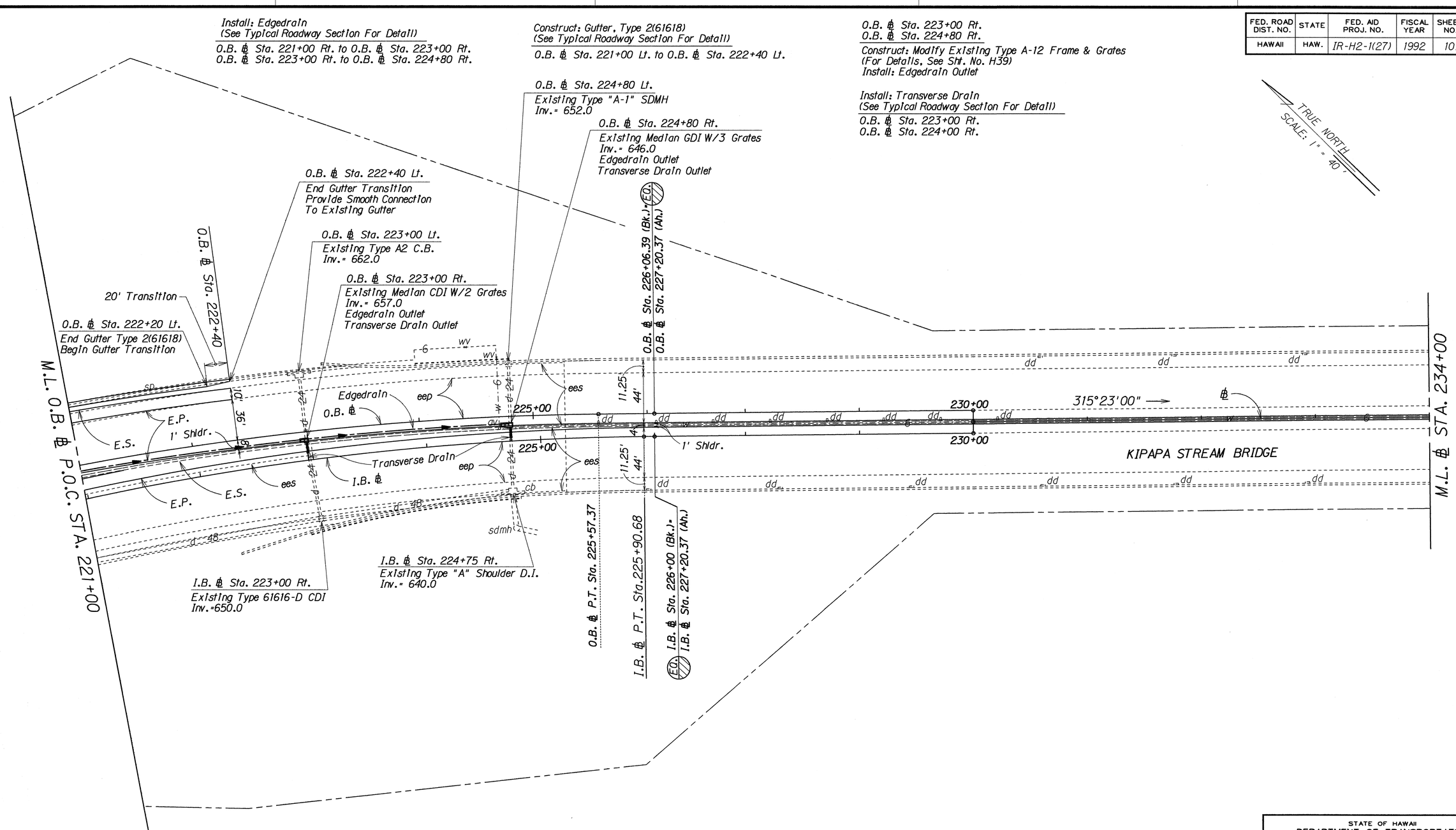

DATE	REVISION
08/14/92	Transverse Drains added

STATE OF HAWAII
DEPARTMENT OF TRANSPORTATION
HIGHWAYS DIVISION

DRAINAGE PLAN

INTERSTATE RTE. H-2, HOV LANES, PH. II
Mililani Interchange to Waipio Interchange
F.A.I. PROJECT NO. IR-H2-1(27)

Scale: 1" = 40' Date: Apr., 1992

SHEET No. H10 OF 42 SHEETS

ADD. 101

ORIGINAL PLAN | SURVEY PLOTTED BY | DRAWN BY | TRACED BY | DESIGNED BY | QUANTITIES BY | CHECKED BY | DATE | NOTE BOOK No.

/usr2/lennox/11h2h10.dgn

FED. ROAD DIST. NO.	STATE	FED. AID PROJ. NO.	FISCAL YEAR	SHEET NO.	TOTAL SHEETS
HAWAII	HAW.	IR-H2-1(27)	1992	102	223

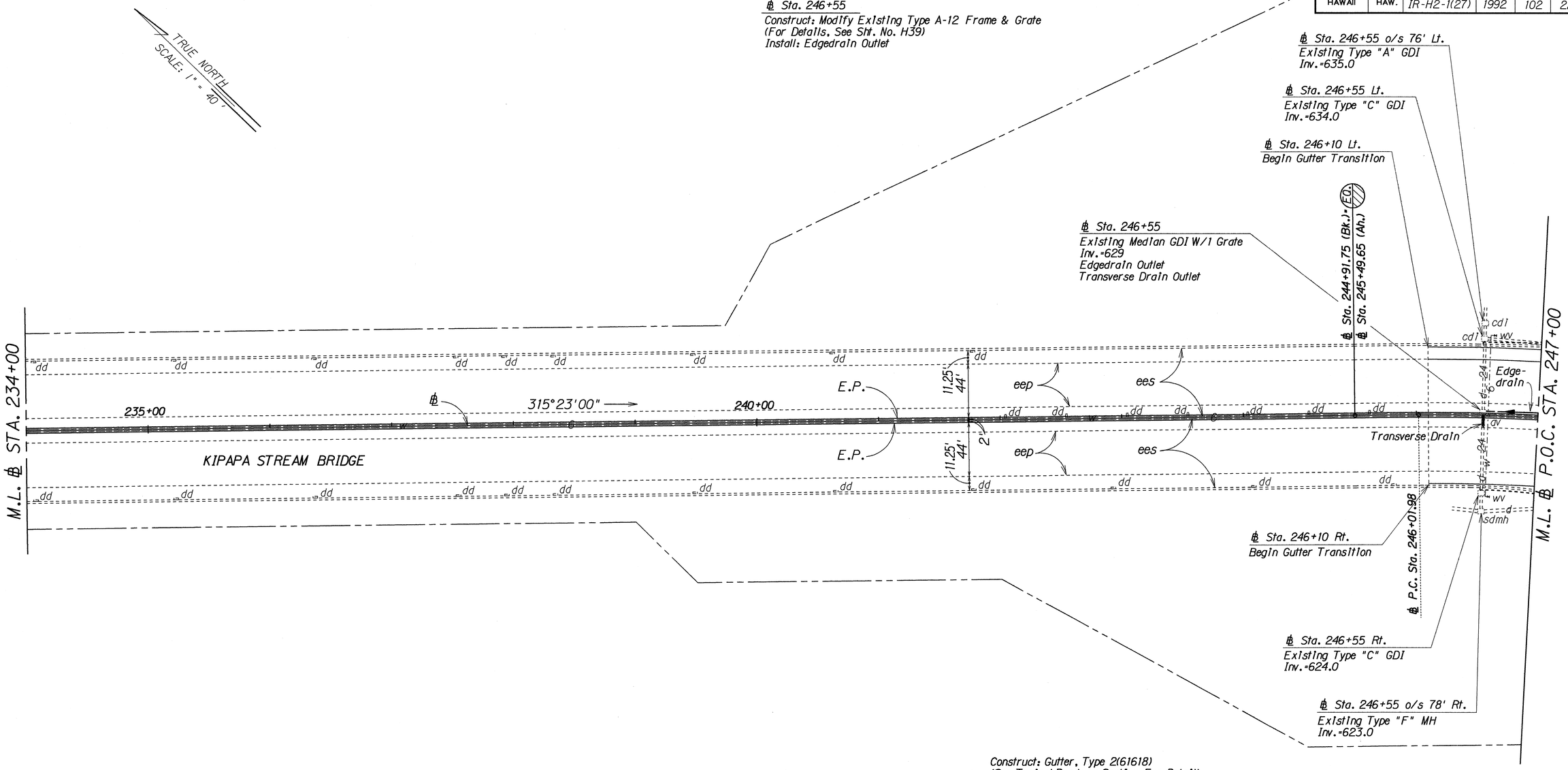

Construct: Gutter, Type 2(61618)
(See Typical Roadway Section For Detail)
℄ Sta. 246+10 Lt. to ℄ Sta. 247+00 Lt.
℄ Sta. 246+10 Rt. to ℄ Sta 247+00 Rt.

Install: Edgedrain
(See Typical Roadway Section For Detail)
℄ Sta. 246+55 to ℄ Sta. 247+00

Install: Transverse Drain
(See Typical Roadway Section For Detail)
℄ Sta. 246+55

DATE	REVISION
08/14/92	Transverse Drain added

STATE OF HAWAII
DEPARTMENT OF TRANSPORTATION
HIGHWAYS DIVISION

DRAINAGE PLAN

INTERSTATE RTE. H-2, HOV LANES, PH. II
Mililani Interchange to Waipio Interchange
F.A.I. PROJECT NO. IR-H2-1(27)

Scale: 1" = 40' Date: Apr., 1992

SHEET No. H11 OF 42 SHEETS

ORIGINAL PLAN | SURVEY PLOTTED BY ____ DATE | BLANK BY ____ | TRACED BY ____ | DESIGNED BY ____ | QUANTITIES BY ____ | CHECKED BY ____ | NOTE BOOK No. ____

/usr2/lennox/11h2h11.dgn

FED. ROAD DIST. NO.	STATE	FED. AID PROJ. NO.	FISCAL YEAR	SHEET NO.	TOTAL SHEETS
HAWAII	HAW.	IR-H2-1(27)	1992	103	223

℄ Sta. 248+00 Lt.
Construct: Type 61614-M GDI
(For Details, See Sht. No. H25)

℄ Sta. 249+00 Lt.
Construct: Type 61614 GDI
Install: 24" CSP, Sht."t" = 0.109"

℄ Sta. 249+00
℄ Sta. 252+00
℄ Sta. 254+50
Construct: Modify Existing Type A-12 Frame & Grates
(For Details, See Sht. No. H39)
Install: Edgedrain Outlet

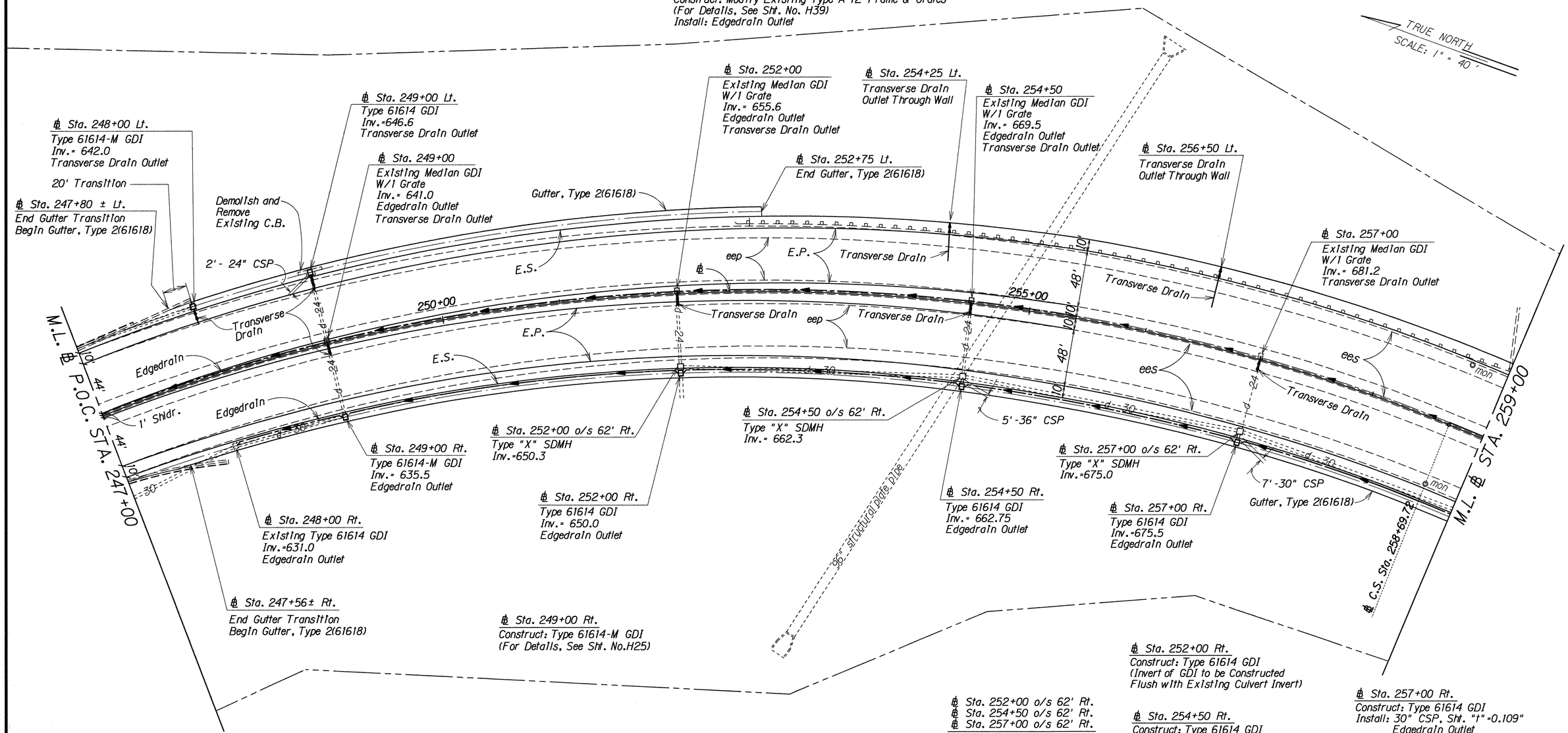

Construct: Gutter, Type 2(61618)
(See Typical Roadway Section For Detail)
℄ Sta. 247+00 Lt. to ℄ Sta. 252+75 Lt.
℄ Sta. 247+00 Rt. to ℄ Sta. 259+00 Rt

Install: Edgedrain
(See Typical Roadway Section For Detail)
℄ Sta. 248+00 Rt. to ℄ Sta. 249+00 Rt.
℄ Sta. 249+00 Rt. to ℄ Sta. 252+00 Rt.
℄ Sta. 252+00 Rt. to ℄ Sta. 254+50 Rt.
℄ Sta. 254+50 Rt. to ℄ Sta. 257+00 Rt.
℄ Sta. 257+00 Rt. to ℄ Sta. 259+00 Rt.

℄ Sta. 247+00 to ℄ Sta. 249+00
℄ Sta. 249+00 to ℄ Sta. 252+00
℄ Sta. 252+00 to ℄ Sta 254+50
℄ Sta. 254+50 to ℄ Sta. 257+00
℄ Sta. 257+00 to ℄ Sta. 259+00

Install: Transverse Drain
(See Typical Roadway Section For Detail)
℄ Sta. 248+00 Lt.
℄ Sta. 249+00 Lt.
℄ Sta. 249+00
℄ Sta. 252+00
℄ Sta. 254+25 Lt.
℄ Sta. 254+50
℄ Sta. 256+50 Lt.
℄ Sta. 257+00

DATE	REVISION
01/19/93	Pipe size changed.
08/14/92	Edgedrain Extended Edgedrain Cleanout removed Transverse Drains added

STATE OF HAWAII
DEPARTMENT OF TRANSPORTATION
HIGHWAYS DIVISION

DRAINAGE PLAN

INTERSTATE RTE. H-2, HOV LANES, PH. II
Mililani Interchange to Waipio Interchange
F.A.I. PROJECT NO. IR-H2-1(27)

Scale: 1" = 40' Date: Apr., 1992

SHEET No. H12 OF 42 SHEETS

ORIGINAL PLAN | SURVEY PLOTTED BY | DRAWN BY | TRACED BY | DESIGNED BY | QUANTITIES BY | CHECKED BY | DATE
NOTE BOOK | 11h2h12ad.dgn

C.O. ADD. 103

11h2h12ad.dgn

FED. ROAD DIST. NO.	STATE	FED. AID PROJ. NO.	FISCAL YEAR	SHEET NO.	TOTAL SHEETS
HAWAII	HAW.	IR-H2-1(27)	1992	104	223

Construct: Gutter, Type 2(61618)
(See Typical Roadway Section For Detail)
Sta. 259+20 Lt. to Sta. 269+75 Lt.
Sta. 259+00 Rt. to Sta. 270+50 Rt.

Sta. 259+10 o/s 96' Lt.
Construct: Std. Concrete Headwall

Sta. 259+25 Lt.
Construct: Type 61616 GDI
Install: 24" CSP, Sht. "t"=0.109"

Construct: Gutter, Type 2(61616)
(See Typical Roadway Section For Detail)
Sta. 269+75 Lt. to Sta. 271+00 Lt.
Sta. 270+50 Rt. to Sta. 271+00 Rt.

Sta. 262+00 Lt.
Construct: Type 61614 GDI
Install: 24" CSP, Sht. "t"=0.109"

Sta. 262+00
Install: Cleanout
(For Details, See Sht. No. H37)

Install: Edgedrain
(See Typical Roadway Section For Detail)
Sta. 259+00 Rt. to Sta. 259+50 Rt.
Sta. 259+50 Rt. to Sta. 262+00 Rt.
Sta. 262+00 Rt. to Sta. 264+50 Rt.
Sta. 264+50 Rt. to Sta. 267+00 Rt.
Sta. 267+00 Rt. to Sta. 270+00 Rt.

Sta. 259+00 to Sta. 259+50
Sta. 259+50 to Sta. 262+00

TRUE NORTH
SCALE: 1" = 40'

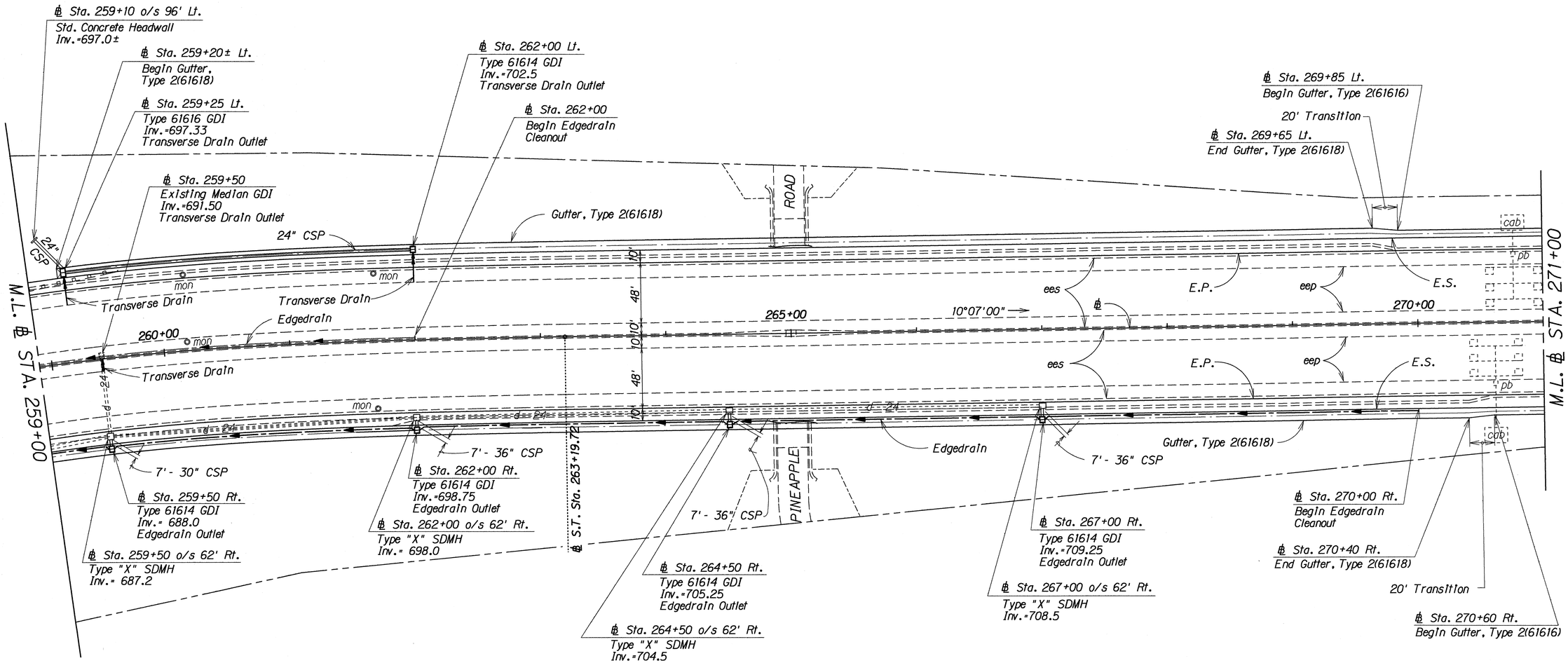

Sta. 259+50 o/s 62' Rt.
℄ Sta. 262+00 o/s 62' Rt.
Sta. 264+50 o/s 62' Rt.
Sta. 267+00 o/s 62' Rt.
Construct: Type "X" SDMH
(For Details, See Sht. No. H31)

Install: Transverse Drain
(See Typical Roadway Section For Detail)
Sta. 259+25 Lt.
Sta. 259+50
Sta. 262+00 Lt.

Sta. 262+00 Rt.
Sta. 264+50 Rt.
Sta. 267+00 Rt.
Construct: Type 61614 GDI
Install: 36" CSP, Sht."t"=0.109"
Edgedrain Outlet

Sta. 259+50 Rt.
Construct: Type 61614 GDI
Install: 30" CSP, Sht."t"=0.109"
Edgedrain Outlet

Sta. 270+00 Rt.
Install: Cleanout
(For Details, See Sht. No. H37)

DATE	REVISION
01/19/93	Pipe size changed.
08/14/92	Edgedrain extended Edgedrain Cleanout added Transverse Drains added

STATE OF HAWAII
DEPARTMENT OF TRANSPORTATION
HIGHWAYS DIVISION

DRAINAGE PLAN

INTERSTATE RTE. H-2, HOV LANES, PH. II
Mililani Interchange to Waipio Interchange
F.A.I. PROJECT NO. IR-H2-1(27)

Scale: 1" = 40' Date: Apr., 1992

SHEET No. H13 OF 42 SHEETS

C.O. ADD. 104

ORIGINAL PLAN | SURVEY PLOTTED BY | DRAWN BY | TRACED BY | DESIGNED BY | QUANTITIES BY | CHECKED BY | DATE
NOTE BOOK | 11h2h13ad.dgn

11h2h13ad.dgn

FED. ROAD DIST. NO.	STATE	FED. AID PROJ. NO.	FISCAL YEAR	SHEET NO.	TOTAL SHEETS
HAWAII	HAW.	IR-H2-1(27)	1992	105	223

Sta. 273+00 o/s 58' Lt.
Construct: Type "X" SDMH
(For Details, See Sht. No. H31)

Sta. 272+96 Lt.
Construct: Type 61614 GDI
(Connect Existing Culvert to New GDI Invert of GDI to be Constructed Flush with Exsiting Culvert Invert)

Sta. 275+50 Lt.
Construct: Type 61614 GDI
Install: 24" CSP. Sht. "t"=0.109

Sta. 278+00 Lt.
Construct: Type 61614 GDI
Install: 24" CSP. Sht. "t"=0.109

Install: Transverse Drain
(See Typical Roadway Section For Detail)
Sta. 282+50 Lt.

Sta. 278+00 Lt.
Type 61614 GDI
Inv.=700.3
Edgedrain Outlet

TRUE NORTH
SCALE: 1" = 40'

℄ Access Rd. "A" Sta. 1+97
Existing Type "B" CDI
Inv.=699.0

Sta. 271+00 Lt.
Begin Edgedrain Cleanout

Sta. 272+96 Lt.
Type 61614 GDI
Inv.=704.1±
Edgedrain Outlet

Sta. 273+00 o/s 58' Lt.
Type "X" SDMH
Inv.=707.5

Sta. 275+50 Lt.
Type 61614 GDI
Inv.=705.1
Edgedrain Outlet

Demolish & Remove Existing GDI. Connect 24" CSP to Existing 24" CMP

Sta. 278+02 Lt.
End Gutter, Type 2(61616)

Demolish & Remove Existing GDI. Connect 24" CSP to Existing 24" CMP

Sta. 282+50 Lt.
Transverse Drain Outlet Through Wall

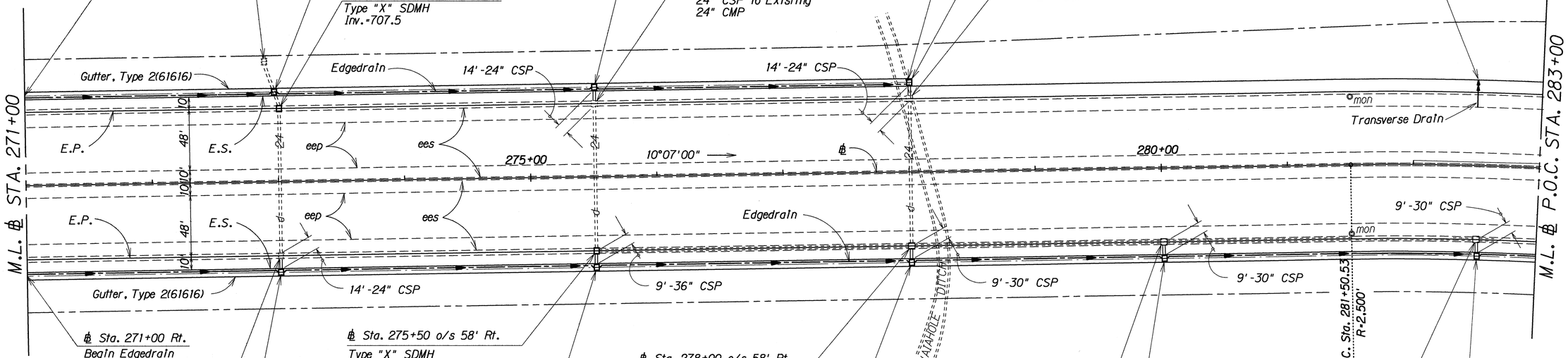

Sta. 271+00 Rt.
Begin Edgedrain Cleanout

Demolish & Remove Existing GDI Connect 24" CSP to Existing 24" CMP

Sta. 273+00 Rt.
Type 61614 GDI
Inv.=708.6
Edgedrain Outlet

Sta. 275+50 o/s 58' Rt.
Type "X" SDMH
Inv.=704.0

Sta. 275+50 Rt.
Type 61614 GDI
Inv.=704.3
Edgedrain Outlet

Sta. 278+00 o/s 58' Rt.
Type "X" SDMH
Inv.=698.7

Sta. 278+00 Rt.
Type 61614 GDI
Inv.=699.0
Edgedrain Outlet

Sta. 280+00 o/s 58' Rt.
Type "X" SDMH
Inv.=691.0

Sta. 280+00 Rt.
Type 61614 GDI
Inv.=691.3
Edgedrain Outlet

Sta. 282+50 o/s 50' Rt.
Type "X" SDMH
Inv.=678.0

Sta. 282+50 Rt.
Type 61614 GDI
Inv.=678.3
Edgedrain Outlet

Construct: Gutter, Type 2(61616)
(See Typical Roadway Section For Detail)
Sta. 271+00 Rt. to Sta. 283+00 Rt.
Sta. 271+00 Lt. to Sta. 278+02 Lt.

Install: Edgedrain
(See Typical Roadway Section For Detail)
Sta. 272+96 Lt. to Sta. 275+50 Lt.
Sta. 275+50 Lt. to Sta. 278+00 Lt.
Sta. 271+00 Rt. to Sta. 273+00 Rt.
Sta. 273+00 Rt. to Sta. 275+50 Rt.
Sta. 275+50 Rt. to Sta. 278+00 Rt.
Sta. 278+00 Rt. to Sta. 280+00 Rt.
Sta. 280+00 Rt. to Sta. 282+50 Rt.
Sta. 282+50 Rt. to Sta. 283+00 Rt.

Sta. 271+00 Lt.
Sta. 271+00 Rt.
Install: Cleanout
(For Details, See Sht. No. H37)

Sta. 273+00 Rt.
Construct: Type 61614 GDI
Install: 24" CSP, Sht. "t"=0.109

Sta. 275+50 o/s 58' Rt.
Construct: Type "X" SDMH
(For Details, See Sht. No. H31)

Sta. 275+50 Rt.
Construct: Type 61614 GDI
Install: 36" CSP, Sht. "t"=0.109

Sta. 278+00 o/s 58' Rt.
Construct: Type "X" SDMH
(For Details, See Sht. No. H31)

Sta. 278+00 Rt.
Construct: Type 61614 GDI
Install: 30" CSP. Sht. "t"=0.109

Sta. 280+00 o/s 58' Rt.
Construct: Type "X" SDMH
(For Details See Sht. No. H31)

Sta. 280+00 Rt.
Construct: Type 61614 GDI
Install: 30" CSP. Sht. "t"=0.109

Sta. 282+50 o/s 58' Rt.
Construct: Type "X" SDMH
(For Details, See Sht. No. H31)

Sta. 282+50 Rt.
Construct: Type 61614 GDI
Install: 30" CSP. Sht. "t"=0.109

DATE	REVISION
01/19/93	Pipe size changed.
08/14/92	Transverse Drain added

STATE OF HAWAII
DEPARTMENT OF TRANSPORTATION
HIGHWAYS DIVISION

DRAINAGE PLAN

INTERSTATE RTE. H-2, HOV LANES, PH. II
Mililani Interchange to Waipio Interchange
F.A.I. PROJECT NO. IR-H2-1(27)

Scale: 1" = 40' Date: Apr., 1992

SHEET No. H14 OF 42 SHEETS

C.O. ADD. 105

ORIGINAL PLAN | SURVEY PLOTTED BY | DRAWN BY | TRACED BY | DESIGNED BY | QUANTITIES BY | CHECKED BY | DATE
NOTE BOOK | 11h2h14ad.dgn

11h2h14ad.dgn

FED. ROAD DIST. NO.	STATE	FED. AID PROJ. NO.	FISCAL YEAR	SHEET NO.	TOTAL SHEETS
HAWAII	HAW.	IR-H2-1(27)	1992	106	223

Install: Transverse Drain
(See Typical Roadway Section For Detail)
Sta. 284+50 Lt.
Sta. 286+50 Lt.

Sta. 291+50 Lt.
Install: Cleanout
(For Details, See Sht. No. H37)

TRUE NORTH
SCALE: 1" = 40'

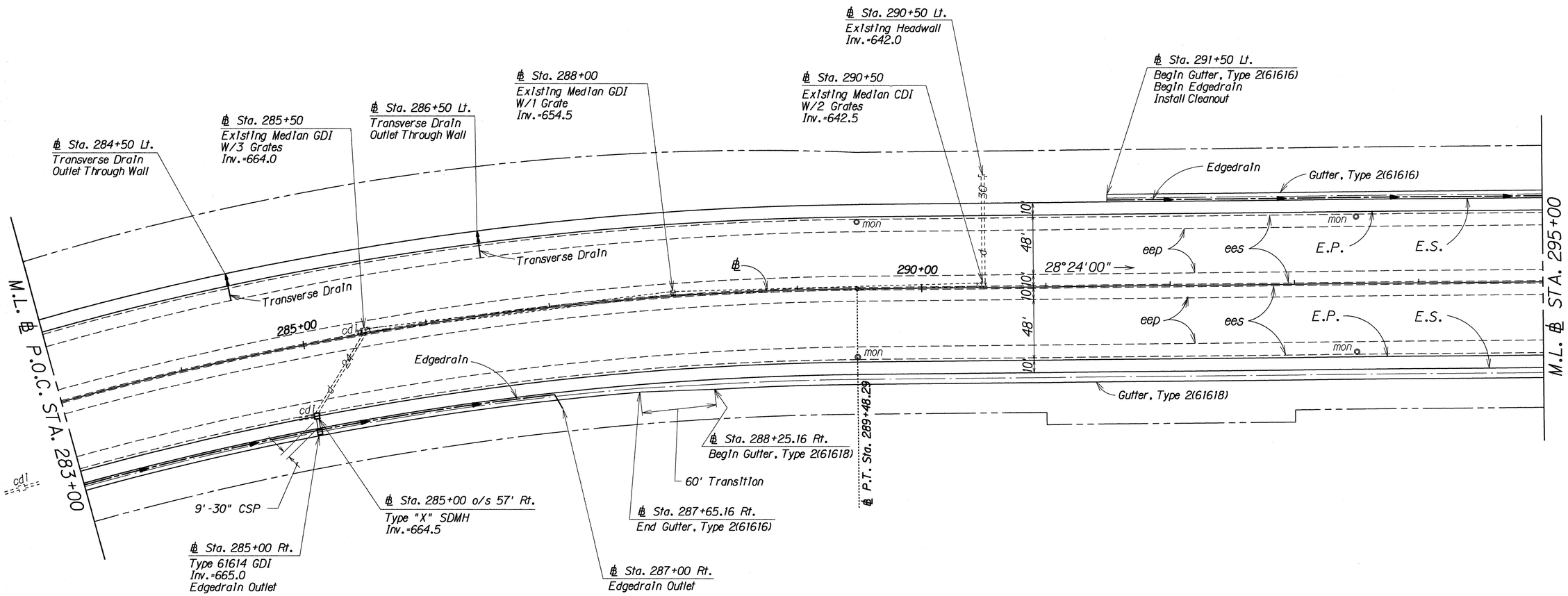

Sta. 285+00 Rt.
Construct: Type 61614 GDI
Install: 30" CSP, Sht "t"=0.105"

Sta. 285+00 o/s 57' Rt.
Construct: Type "X" SDMH
(For Details, See Sht. No. H31)

Construct: Gutter, Type 2(61616)
(See Typical Roadway Section For Detail)
Sta. 283+00 Rt. to Sta. 287+95.16 Rt.
Sta. 291+50 Lt. to Sta. 295+00 Lt.

Construct: Gutter, Type 2(61618)
(See Typical Roadway Section For Detail)
Sta. 287+95.16 Rt. to Sta. 295+00 Rt.

Install: Edgedrain
(See Typical Roadway Section For Detail)
Sta. 283+00 Rt. to Sta. 285+00 Rt.
Sta. 285+00 Rt. to Sta. 287+00 Rt.
Sta. 291+50 Lt. to Sta. 295+00 Lt.

Sta. 287+00 Rt.
Install: Edgedrain Outlet
(For Details, See Sht. No. H38)

DATE	REVISION
01/19/93	Pipe size changed.
08/14/92	Transverse Drains added

STATE OF HAWAII
DEPARTMENT OF TRANSPORTATION
HIGHWAYS DIVISION

DRAINAGE PLAN

INTERSTATE RTE. H-2, HOV LANES, PH. II
Mililani Interchange to Waipio Interchange
F.A.I. PROJECT NO. IR-H2-1(27)

Scale: 1" = 40' Date: Apr., 1992

SHEET No. H15 OF 42 SHEETS

ORIGINAL PLAN | SURVEY PLOTTED BY | DRAWN BY | TRACED BY | DESIGNED BY | QUANTITIES BY | CHECKED BY | DATE
NOTE BOOK | 11h2h15ad.dgn

C.O. ADD. 106

11h2h15ad.dgn

FED. ROAD DIST. NO.	STATE	FED. AID PROJ. NO.	FISCAL YEAR	SHEET NO.	TOTAL SHEETS
HAWAII	HAW.	IR-H2-1(27)	1992	107	223

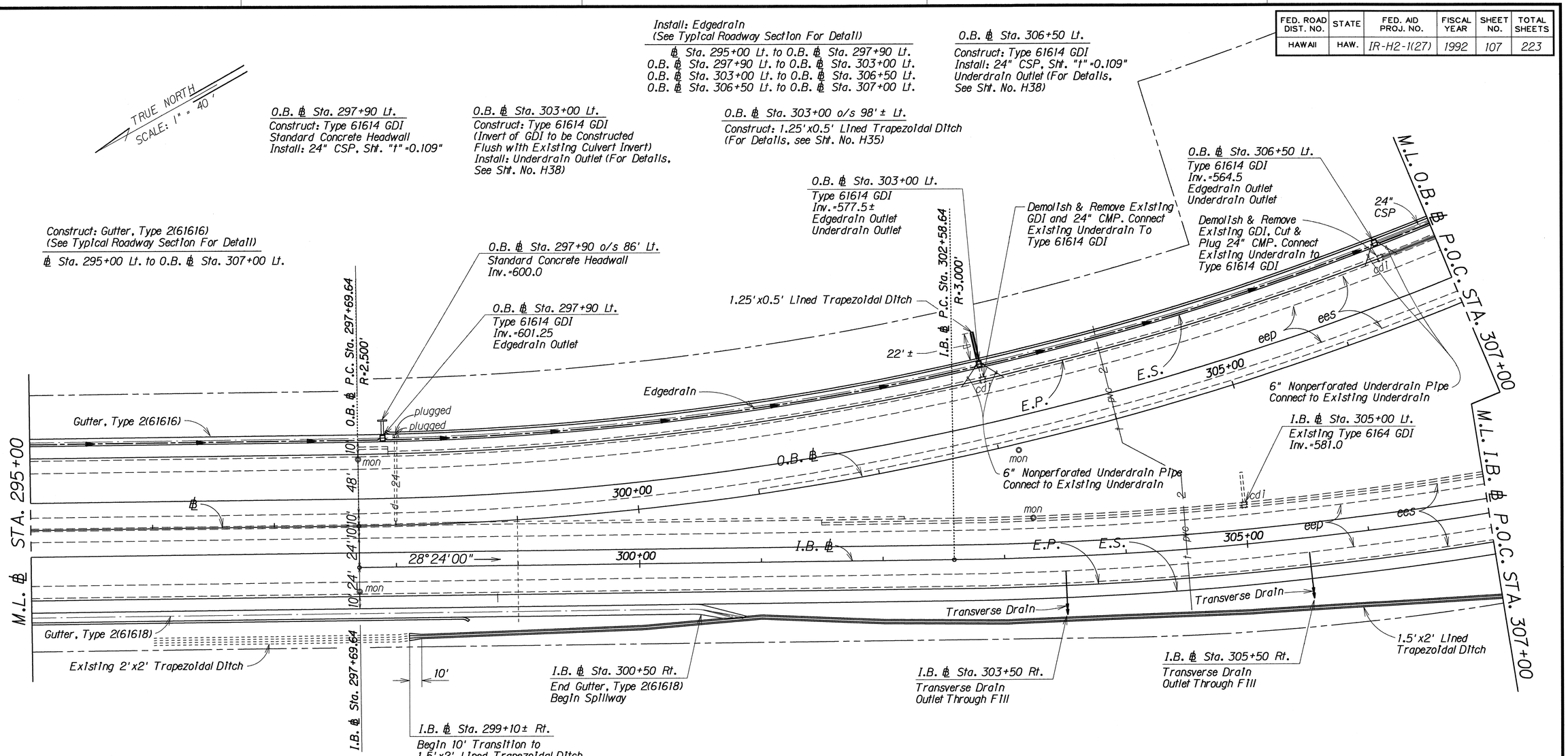

DATE	REVISION
12/06/93	1.25'x0.5' Lined Trapezoidal Ditch added
06/09/93	1.5'x2' Lined Trapezoidal Ditch added
08/14/92	Transverse Drains added

STATE OF HAWAII
DEPARTMENT OF TRANSPORTATION
HIGHWAYS DIVISION

DRAINAGE PLAN

INTERSTATE RTE. H-2, HOV LANES, PH. II
Mililani Interchange to Waipio Interchange
F.A.I. PROJECT NO. IR-H2-1(27)

Scale: 1" = 40' Date: Apr., 1992

SHEET No. H16 OF 42 SHEETS

C.O. ADD. 107

11h2h16ad.dgn

ORIGINAL PLAN — SURVEY PLOTTED BY ___ DATE ___ / DRAWN BY ___ / TRACED BY ___ / DESIGNED BY ___ / QUANTITIES BY ___ / CHECKED BY ___ / NOTE BOOK ___ / N:\11h2h16ad.dgn

FED. ROAD DIST. NO.	STATE	FED. AID PROJ. NO.	FISCAL YEAR	SHEET NO.	TOTAL SHEETS
HAWAII	HAW.	IR-H2-1(27)	1992	108	223

TRUE NORTH
SCALE: 1" = 40'

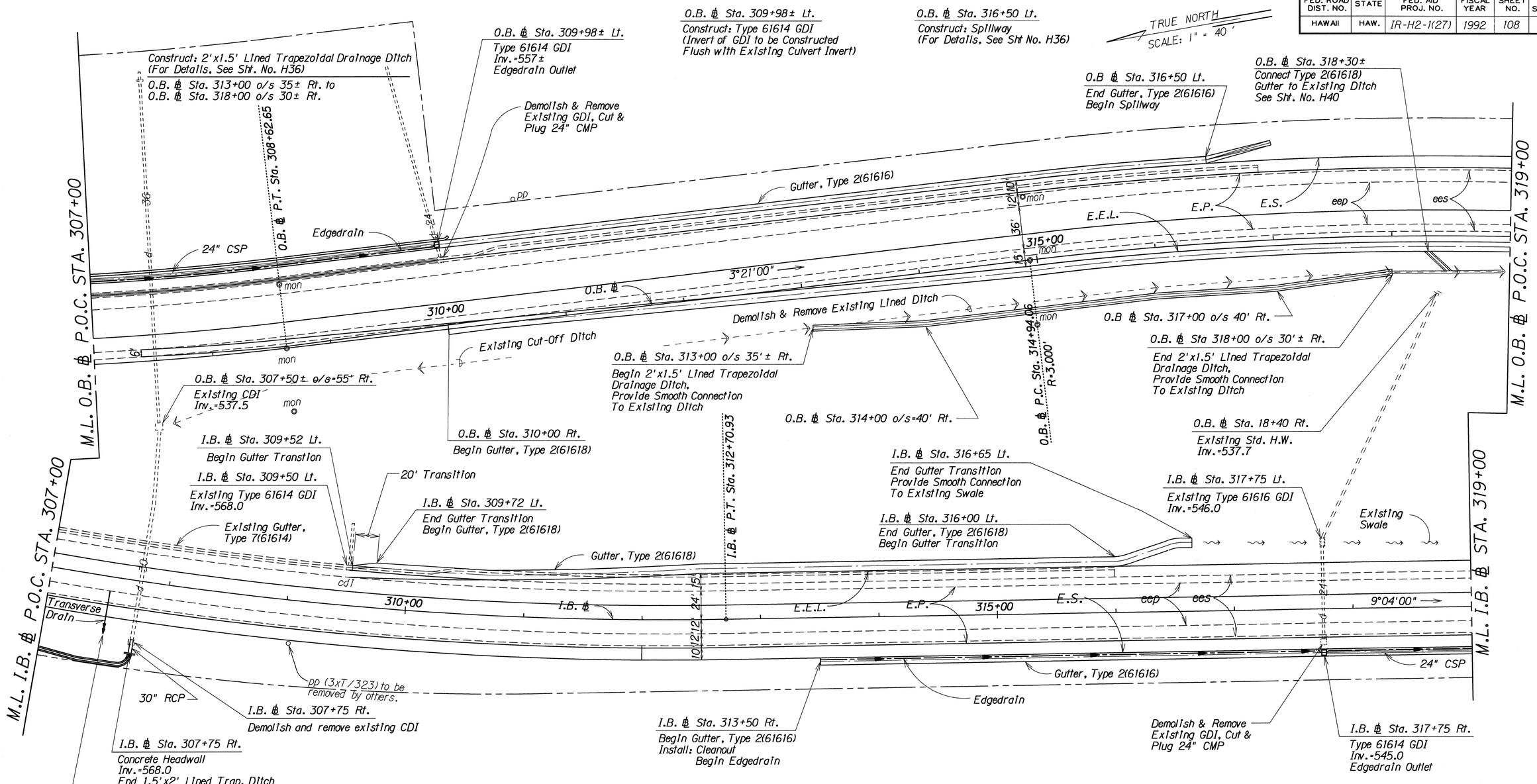

DATE	REVISION
06/09/93	1.5'x2' Lined Trapezoidal Ditch added
08/14/92	Transverse Drain added

STATE OF HAWAII
DEPARTMENT OF TRANSPORTATION
HIGHWAYS DIVISION

DRAINAGE PLAN

INTERSTATE RTE. H-2, HOV LANES, PH. II
Mililani Interchange to Waipio Interchange
F.A.I. PROJECT NO. IR-H2-1(27)

Scale: 1" = 40' Date: Apr., 1992

SHEET No. H17 OF 42 SHEETS

C.O. ADD. 108

11h2h17ad.dgn

ORIGINAL PLAN | SURVEY PLOTTED BY | DRAWN BY | TRACED BY | DESIGNED BY | QUANTITIES BY | CHECKED BY | DATE | NOTE BOOK | 11h2h17ad.dgn

FED. ROAD DIST. NO.	STATE	FED. AID PROJ. NO.	FISCAL YEAR	SHEET NO.	TOTAL SHEETS
HAWAII	HAW.	IR-H2-1(27)	1992	109	223

TRUE NORTH
SCALE: 1" = 40'

Install: Edgedrain
(See Typical Roadway Section For Detail)
O.B. ℄ Sta. 321+60 Rt. to O.B. ℄ Sta. 328+00 Rt.
I.B. ℄ Sta. 319+00 Rt. to I.B. ℄ Sta. 322+00 Rt.
I.B. ℄ Sta. 322+00 Rt. to I.B. ℄ Sta. 329+75 Rt.
I.B. ℄ Sta. 330+00 Lt. to I.B. ℄ Sta. 331+00 Lt.

O.B. ℄ Sta. 321+60 Rt.
Install: Cleanout
(For Details, See Sht. No. H37)

Install: Transverse Drain
(See Typical Roadway Section For Detail)
O.B. ℄ Sta. 322+50 Lt.
O.B. ℄ Sta. 325+50 Lt.
O.B. ℄ Sta. 328+50 Lt.

O.B. ℄ Sta. 323+00 Rt.
Construct: Concrete Drop Inlet Cover
(For Details, See Sht. No. H35)

O.B. ℄ Sta. 328+00 Rt.
Construct: Type 61614 GDI
(Invert of GDI to be Constructed
Flush with Existing Culvert Invert)
Install: 24" CSP

O.B. ℄ Sta. 322+50 Lt.
Transverse Drain
Outlet Through Wall

O.B. ℄ Sta. 323+00 Lt.
Existing Std. Headwall
Inv.=512.0

O.B. ℄ Sta. 325+50 Lt.
Transverse Drain
Outlet Through Wall

O.B. ℄ Sta. 328+00 o/s 28' ± Rt.
Construct: Concrete Drop Inlet Cover
(For Details, See Sht. No. H35)

O.B. ℄ Sta. 328+00 Lt.
Existing Std. Headwall
Inv.=505.0

O.B. ℄ Sta. 328+50 Lt.
Transverse Drain
Outlet Through Wall

M.L. O.B. ℄ P.O.C. STA. 319+00

M.L. O.B. ℄ STA. 331+00

M.L. I.B. ℄ STA. 319+00

M.L. I.B. ℄ STA. 331+00

Transverse Drain
Transverse Drain
Transverse Drain
E.E.L.
O.B. ℄
eep
325+00
E.P.
6'-24" CSP
E.S.
ees
320+00
330+00
Gutter, Type 2(61618)
Existing Lined Ditch
Existing Lined Ditch
Edgedrain
O.B. ℄ Sta. 321+60 Rt.
Install: Cleanout
Begin Edgedrain
O.B. ℄ Sta. 323+00 Rt.
Modified Type "A" CDI
Inv.=519.0
Demolish & Remove Existing GDI
Connect 24" CSP to Existing 24" CMP
O.B. ℄ Sta. 328+00 o/s 28' ± Rt.
Modified Type "B" CDI
Inv.=513.0
Existing Lined Ditch
O.B. ℄ Sta. 328+00 Rt.
Type 61614 GDI
Inv.=511.5±
Edgerdrain Outlet
I.B. ℄ Sta. 330+00 Lt.
Begin Gutter, Type 2(61618)
Install Cleanout
Begin Edgedrain
O.B. ℄ P.T. Sta. 330+17.73
Existing Swale
I.B. ℄ Sta. 329+75 Lt.
Existing Type 61614 GDI
Inv.=514.5
Gutter, Type 2(61618)
I.B. ℄
325+00
E.P.
E.S.
eep
ees
E.E.L.
320+00
27°15'00"
Gutter, Type 2(61616)
Edgedrain
24" CSP
24" CSP
I.B. ℄ P.C. Sta. 320+57.40
R=2,100'
Begin 840' Lane Taper
I.B. ℄ Sta. 321+60
I.B. ℄ Sta. 322+00 o/s 59' Rt.
Standard Concrete Headwall
Inv.=529.5
I.B. ℄ Sta. 322+00 Rt.
Type 61614 GDI
Inv.=530.0
Edgedrain Outlet
I.B. ℄ P.T. Sta. 327+23.86
I.B. ℄ Sta. 329+75 Rt.
Type 61614-M GDI
Inv.=515.3
End Gutter, Type 2(61616)
Edgedrain Outlet

Construct: Gutter, Type 2(61618)
(See Typical Roadway Section For Detail)
O.B. ℄ Sta. 319+00 Rt. to O.B. ℄ Sta. 331+00 Rt.
I.B. ℄ Sta. 330+00 Lt. to O.B. ℄ Sta. 331+00 Lt.

Construct: Gutter, Type 2(61616)
(See Typical Roadway Section For Detail)
I.B. ℄ Sta. 319+00 Rt. to I.B. ℄ Sta. 329+75 Rt.

I.B. ℄ Sta. 322+00 o/s 59' Rt.
Construct: Standard Concrete Headwall

I.B. ℄ Sta. 322+00 Rt.
Construct: Type 61614 GDI
Install: 24" CSP, Sht."t"=0.109"

I.B. ℄ Sta. 329+75 Rt.
Construct: Type 61614-M GDI
(For Details, See Sht. No. H25)

I.B. ℄ Sta. 330+00 Lt.
Install: Cleanout
(For Details, See Sht. No. H37)

DATE	REVISION
08/14/92	Transverse Drains added

STATE OF HAWAII
DEPARTMENT OF TRANSPORTATION
HIGHWAYS DIVISION

DRAINAGE PLAN

INTERSTATE RTE. H-2, HOV LANES, PH. II
Mililani Interchange to Waipio Interchange
F.A.I. PROJECT NO. IR-H2-1(27)

Scale: 1" = 40' Date: Apr., 1992

SHEET No. H18 OF 42 SHEETS

ADD. 109

ORIGINAL PLAN	SURVEY PLOTTED BY	DATE
	DRAWN BY	
	TRACED BY	
NOTE BOOK	DESIGNED BY	
	QUANTITIES BY	
	CHECKED BY	
	REVISED BY	
	DATE	

11h2h18.dgn

FED. ROAD DIST. NO.	STATE	FED. AID PROJ. NO.	FISCAL YEAR	SHEET NO.	TOTAL SHEETS
HAWAII	HAW.	IR-H2-1(27)	1992	110	223

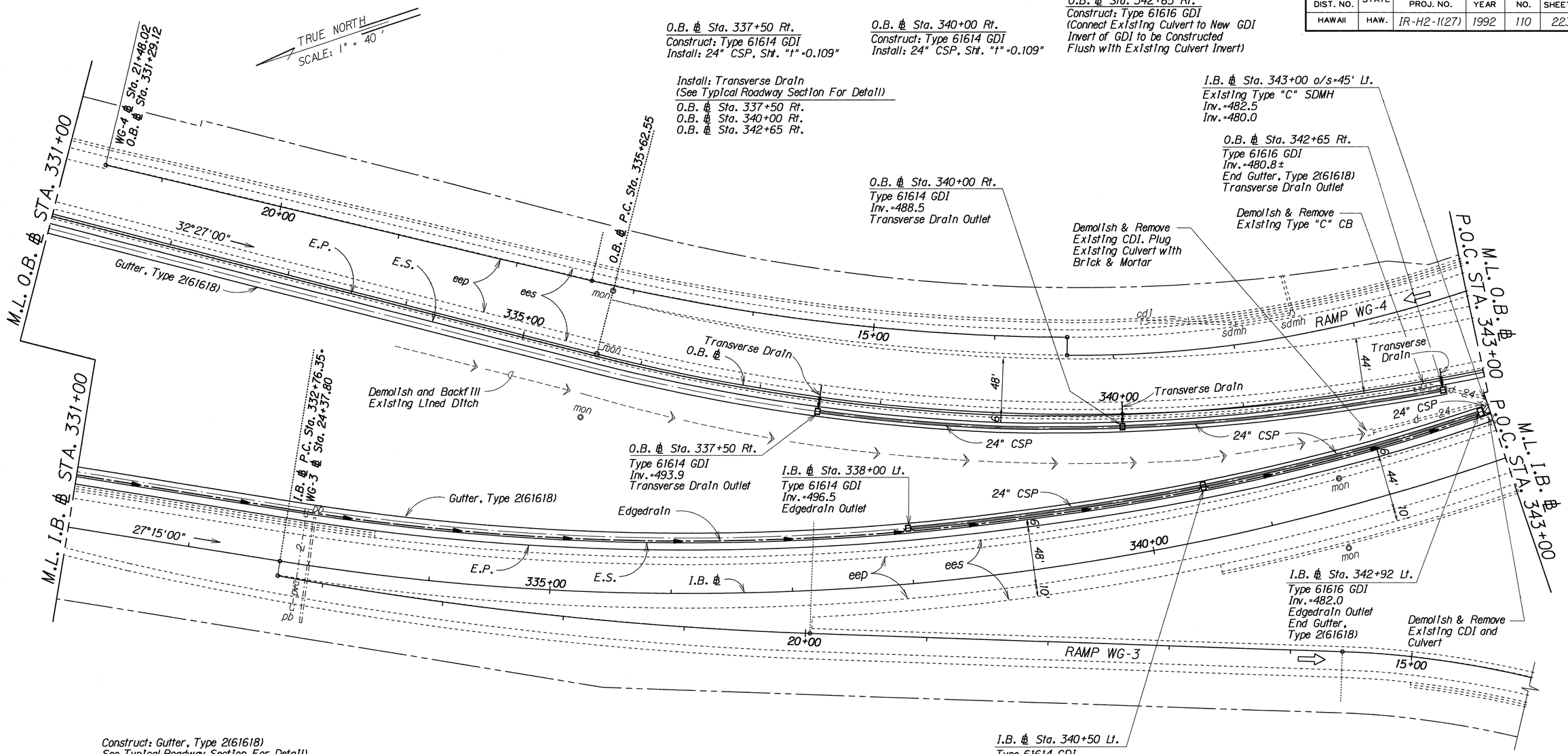

O.B. ℄ Sta. 337+50 Rt.
Construct: Type 61614 GDI
Install: 24" CSP, Sht. "t"=0.109"

O.B. ℄ Sta. 340+00 Rt.
Construct: Type 61614 GDI
Install: 24" CSP, Sht. "t"=0.109"

O.B. ℄ Sta. 342+65 Rt.
Construct: Type 61616 GDI
(Connect Existing Culvert to New GDI Invert of GDI to be Constructed Flush with Existing Culvert Invert)

Install: Transverse Drain
(See Typical Roadway Section For Detail)
O.B. ℄ Sta. 337+50 Rt.
O.B. ℄ Sta. 340+00 Rt.
O.B. ℄ Sta. 342+65 Rt.

I.B. ℄ Sta. 343+00 o/s=45' Lt.
Existing Type "C" SDMH
Inv.=482.5
Inv.=480.0

O.B. ℄ Sta. 342+65 Rt.
Type 61616 GDI
Inv.=480.8±
End Gutter, Type 2(61618)
Transverse Drain Outlet

O.B. ℄ Sta. 340+00 Rt.
Type 61614 GDI
Inv.=488.5
Transverse Drain Outlet

Demolish & Remove Existing CDI. Plug Existing Culvert with Brick & Mortar

Demolish & Remove Existing Type "C" CB

Construct: Gutter, Type 2(61618)
See Typical Roadway Section For Detail)
O.B. ℄ Sta. 331+00 Rt. to O.B. ℄ Sta. 342+65 Rt.
I.B. ℄ Sta. 331+00 Lt. to I.B. ℄ Sta. 342+92 Lt.

I.B. ℄ Sta. 340+50 Lt.
Type 61614 GDI
Inv.=490.0
Edgedrain Outlet

Install: Edgedrain
(See Typical Roadway Section For Details)
I.B. ℄ Sta. 331+00 Lt. to I.B. ℄ Sta. 338+00 Lt.
I.B. ℄ Sta. 338+00 Lt. to I.B. ℄ Sta. 340+50 Lt.
I.B. ℄ Sta. 340+50 Lt. to I.B. ℄ Sta. 342+92 Lt.
I.B. ℄ Sta. 342+92 Lt. to I.B. ℄ Sta. 343+00 Lt.

I.B. ℄ Sta. 338+00 Lt.
Construct: Type 61614 GDI
Install: 24" CSP, Sht. "t"=0.109"

I.B. ℄ Sta. 340+50 Lt.
Construct: Type 61614 GDI
Install: 24" CSP, Sht. "t"=0.109"

I.B. ℄ Sta. 342+92 Lt.
Construct: Type 61616 GDI
Install: 24" CSP, Sht. "t"=0.109"

DATE	REVISION
08/14/92	Transverse Drain added Edgedrain extended

STATE OF HAWAII
DEPARTMENT OF TRANSPORTATION
HIGHWAYS DIVISION

DRAINAGE PLAN

INTERSTATE RTE. H-2, HOV LANES, PH. II
Mililani Interchange to Waipio Interchange
F.A.I. PROJECT NO. IR-H2-1(27)

Scale: 1" = 40' Date: Apr., 1992

SHEET No. H19 OF 42 SHEETS

ADD. 110

ORIGINAL PLAN | SURVEY PLOTTED BY | DRAWN BY | TRACED BY | DESIGNED BY | QUANTITIES BY | CHECKED BY | DATE | NOTE BOOK No.

11h2h19.dgn

FED. ROAD DIST. NO.	STATE	FED. AID PROJ. NO.	FISCAL YEAR	SHEET NO.	TOTAL SHEETS
HAWAII	HAW.	IR-H2-1(27)	1992	111	223

TRUE NORTH
SCALE: 1" = 40'

O.B. ℄ Sta. 347+38 Lt.
Install: Cleanout
(For Details, See Sht. No. H37)

O.B. ℄ Sta. 348+50 Rt.
Construct: Type 6 MDI
(For Details, See Sht. Nos. H42A & H42B)

Install: Transverse Drain
(See Typical Roadway Section For Detail)
O.B. ℄ Sta. 344+95 Rt.
O.B. ℄ Sta. 348+50 Rt.

O.B. ℄ Sta. 347+58 Lt.
End Gutter Transition
Begin Gutter, Type 2(61618)

20' Transition

O.B. ℄ Sta. 347+38 Lt.
Cleanout
Begin Gutter Transition
Begin Edgedrain

Existing Gutter, Type 7(61614)

M.L. O.B. ℄ P.O.C. STA. 343+00

O.B. ℄ Sta. 343+20±

M.L. I.B. ℄ P.O.C. STA. 343+00

I.B. ℄ P.T. Sta. 346+81.34
R=2,100'

R=1,600'
O.B. ℄ P.T. Sta. 347+78.23

RAMP WG-4

5+00

RAMP WG-1

55+00

BLVD.

M.L. WG-1 ℄ P.T. STA. 2+10.78

M.L. O.B. ℄ STA. 355+00

Transverse Drain

345+00

O.B. ℄

Edgedrain

Gutter, Type 2(61618)

O.B. ℄ Sta. 350+02.07=EQ.
O.B. ℄ Sta. 350+00

O.B. ℄ Sta. 346+87 Lt.
Existing Type 61614 GDI
Inv.=468.5

Transverse Drain

350+00

348°55'00"

E.P.

eep

E.S.

ees

I.B. ℄

1' Shldr.

24'8"

12'

10'

44'

5'

2'

cdl

sdmh

mon

Existing Gutter, Type 7(61614)

4" pvc in conc. jacket

I.B. ℄ Sta. 345+00 Rt.
Existing Type "A" CDI
Inv.=487.1

O.B. ℄ Sta. 348+50 Rt.
Type 6 MDI
Inv.=466.0
Edgedrain Outlet
Transverse Drain Outlet

I.B. ℄ Sta. 348+88 Rt.
Existing Type 61214 GDI
Inv.=465.5

I.B. ℄ Sta. 348+90 Rt.
Begin Gutter Transition
Begin Edgedrain

20' Transition

EQ. I.B. ℄ Sta. 350+15.53=
I.B. ℄ Sta. 350+00

I.B. ℄ Sta. 349+10 Rt.
End Gutter Transition
Begin Gutter, Type 2(61618)

Gutter, Type 2(61618)

I.B. ℄ Sta. 352+25 Rt.
Type 61614-M GDI
Inv.=452.0
Edgedrain Outlet

KA UKA

Edgedrain

24

sdmh

Construct: Gutter, Type 2(61618)
(See Typical Roadway Section For Detail)
O.B. ℄ Sta. 347+38 Lt. to O.B. ℄ Sta. 355+00 Lt.
I.B. ℄ Sta. 348+90 Rt. to I.B. ℄ Sta. 355+00 Rt.

Install: Edgedrain
(See Typical Roadway Section For Detail)
I.B. ℄ Sta. 343+00 Lt. to I.B. ℄ Sta. 345+05 Lt.
I.B. ℄ Sta. 345+05 Lt. to O.B. ℄ Sta. 348+50 Rt.
O.B. ℄ Sta. 347+38 Lt. to O.B. ℄ Sta. 355+00
I.B. ℄ Sta. 348+90 Rt. to I.B. ℄ Sta. 355+00 Rt.

I.B. ℄ Sta. 345+05 Lt.
Existing Type 61616 GDI
Inv.=471.0
Edgedrain Outlet
Transverse Drain Outlet

I.B. ℄ Sta. 352+25 Rt.
Construct: Type 61614-M GDI
(For Detail, See Sht. No. H25)

DATE	REVISION
07/22/94	Type 6 MDI added
08/14/92	Transverse Drains added Edgedrains added

STATE OF HAWAII
DEPARTMENT OF TRANSPORTATION
HIGHWAYS DIVISION

DRAINAGE PLAN

INTERSTATE RTE. H-2, HOV LANES, PH. II
Mililani Interchange to Waipio Interchange
F.A.I. PROJECT NO. IR-H2-1(27)

Scale: 1" = 40' Date: Apr., 1992

SHEET No. H20 OF 42 SHEETS

C.O. ADD. 111

11h2h20ad.dgn

ORIGINAL PLAN | SURVEY PLOTTED BY | DRAWN BY | TRACED BY | DESIGNED BY | QUANTITIES BY | CHECKED BY | DATE
NOTE BOOK | 11h2h20ad.dgn

FED. ROAD DIST. NO.	STATE	FED. AID PROJ. NO.	FISCAL YEAR	SHEET NO.	TOTAL SHEETS
HAWAII	HAW.	IR-H2-1(27)	1992	112	223

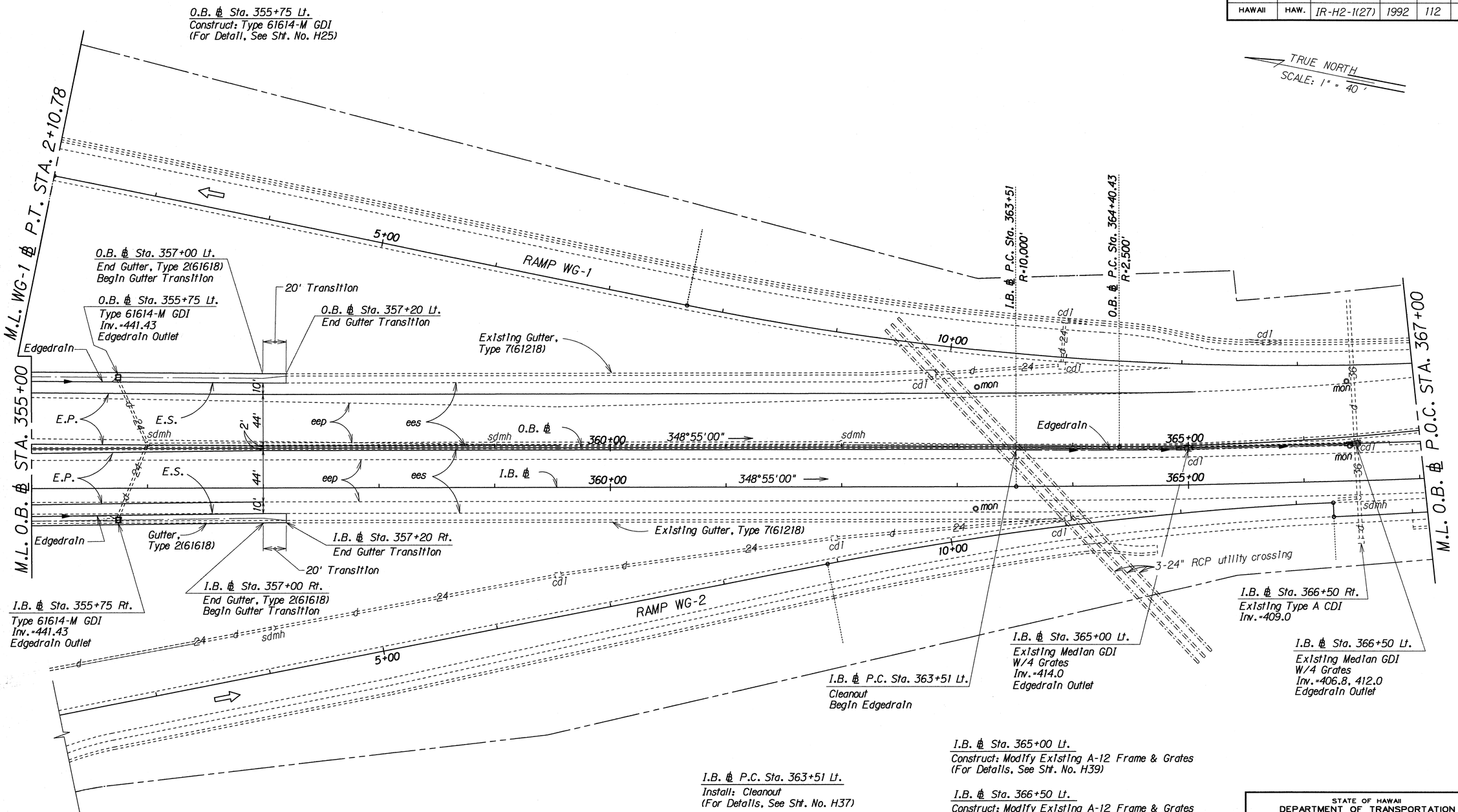

I.B. ℄ Sta. 365+00 Lt.
Construct: Modify Existing A-12 Frame & Grates
(For Details, See Sht. No. H39)

I.B. ℄ Sta. 366+50 Lt.
Construct: Modify Existing A-12 Frame & Grates
(For Details, See Sht. No.H39)

I.B. ℄ P.C. Sta. 363+51 Lt.
Install: Cleanout
(For Details, See Sht. No. H37)

I.B. ℄ Sta. 355+75 Rt.
Construct: Type 61614-M GDI
(For Detail, See Sht. No. H25)

Construct: Gutter, Type 2(61618)
(See Typical Roadway Section for Detail)
O.B. ℄ Sta. 355+00 Lt. to O.B. ℄ Sta. 357+20 Lt.
I.B. ℄ Sta. 355+00 Rt. to O.B. ℄ Sta. 357+20 Rt.

Install: Edgedrain
(See Typical Roadway Section For Detail)
O.B. ℄ Sta. 355+00 Lt. to O.B. ℄ Sta. 355+75 Lt.
I.B. ℄ Sta. 355+00 Rt. to I.B. ℄ Sta. 355+75 Rt.
I.B. ℄ P.C. Sta. 363+51 Lt. to I.B. ℄ Sta. 365+00 Lt.
I.B. ℄ Sta. 365+00 Lt. to I.B. ℄ Sta. 366+50 Lt.

DATE	REVISION
08/14/92	Edgedrains added Edgedrain Cleanout added

STATE OF HAWAII
DEPARTMENT OF TRANSPORTATION
HIGHWAYS DIVISION

DRAINAGE PLAN

INTERSTATE RTE. H-2, HOV LANES, PH. II
Mililani Interchange to Waipio Interchange
F.A.I. PROJECT NO. IR-H2-1(27)

Scale: 1" = 40' Date: Apr., 1992

SHEET No. H21 OF 42 SHEETS

ADD. 112

ORIGINAL PLAN | SURVEY PLOTTED BY | DRAWN BY | TRACED BY | DESIGNED BY | QUANTITIES BY | CHECKED BY | DATE | NOTE BOOK | No.

11h2h21.dgn

FED. ROAD DIST. NO.	STATE	FED. AID PROJ. NO.	FISCAL YEAR	SHEET NO.	TOTAL SHEETS
HAWAII	HAW.	IR-H2-1(27)	1992	113	223

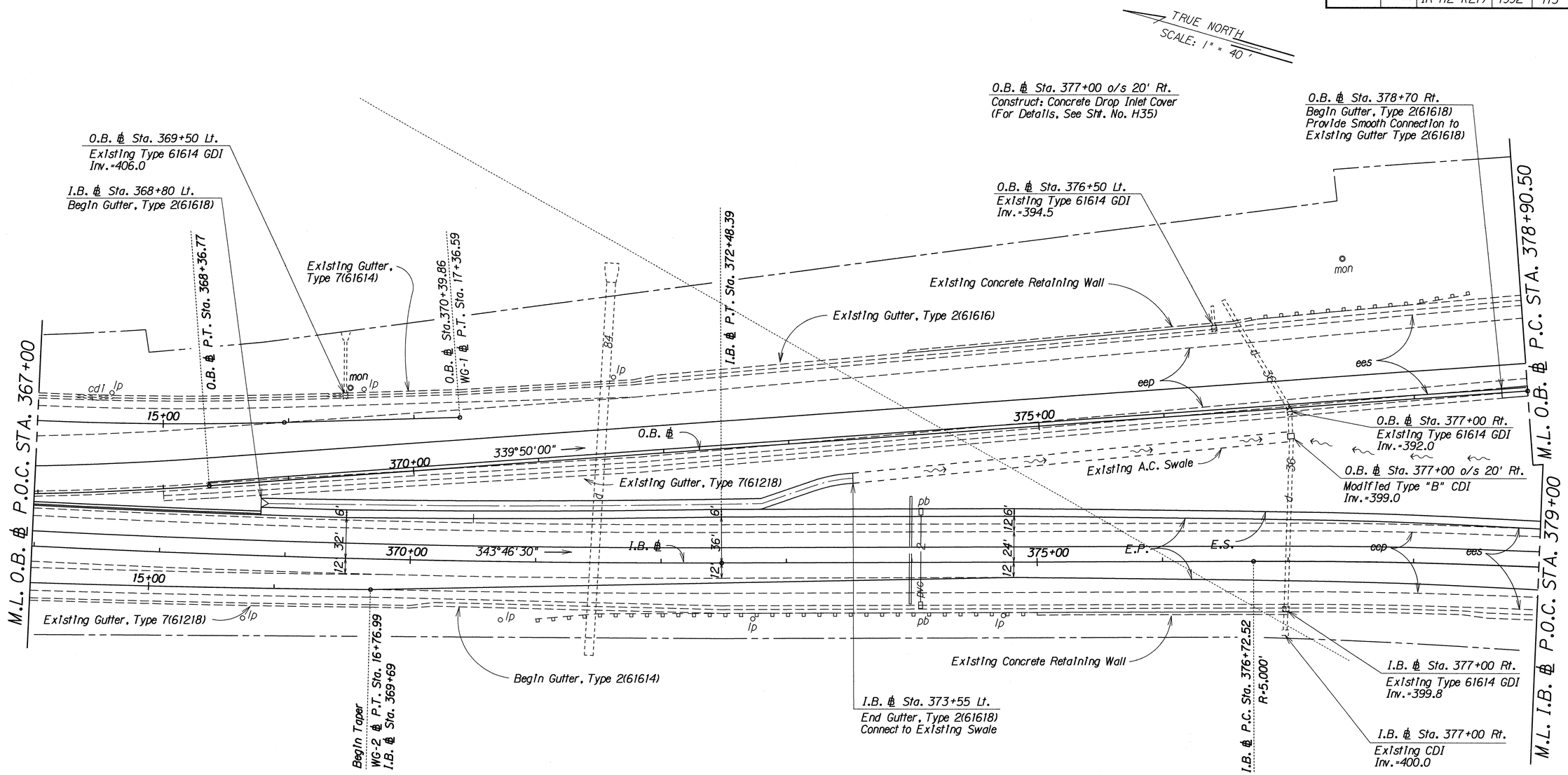

Construct: Gutter, Type 2(61618)
(See Typical Roadway Section For Detail)

I.B. ℄ Sta. 368+80 Lt. to I.B. ℄ Sta. 373+55 Lt.
O.B. ℄ Sta. 378+70 Rt. to O.B. ℄ Sta. 378+90.50 Rt.

DATE	REVISION
10/25/93	Extend gutter Type 2(61618)

STATE OF HAWAII
DEPARTMENT OF TRANSPORTATION
HIGHWAYS DIVISION

DRAINAGE PLAN

INTERSTATE RTE. H-2, HOV LANES, PH. II
Mililani Interchange to Waipio Interchange
F.A.I. PROJECT NO. IR-H2-1(27)

Scale: 1" = 40' Date: Apr., 1992

SHEET No. H22 OF 42 SHEETS

ORIGINAL PLAN
SURVEY PLOTTED BY
DRAWN BY
TRACED BY
DESIGNED BY
QUANTITIES BY
CHECKED BY
DATE
NOTE BOOK
No.

C.O. 113

11h2h22.dgn

FED. ROAD DIST. NO.	STATE	FED. AID PROJ. NO.	FISCAL YEAR	SHEET NO.	TOTAL SHEETS
HAWAII	HAW.	IR-H2-1(27)	1992	114	223

TRUE NORTH
SCALE: 1" = 40'

O.B. ℄ Sta. 380+00 Rt.
Construct: Type 61614-M GDI
(For Details, See Sht. No. H25)

O.B. ℄ Sta. 383+00 Rt.
Construct: Type 61614-M GDI
(For Details, See Sht. No. H25)

O.B. ℄ Sta. 386+00 Rt.
Construct: Type "X" SDMH
(For Details, See Sht. No. H31)

O.B. ℄ Sta. 386+00 o/s 61' Rt.
Construct: Type "K" Inlet
(For Details, See Sht. No. H34 & H36)
Install: 24" CSP, Sht."t"=0.109

O.B. ℄ Sta. 386+00 Rt.
Construct: Type 61614 GDI
Install: 36" CSP, Sht. "t"=0.109"

2'x1.5' Lined Trapezoidal Drainage Ditch
(For Details, See Sht. No. H36)
O.B. ℄ Sta. 383+00 o/s 66' Rt. to
O.B. ℄ Sta. 387+00 o/s 71' Rt.

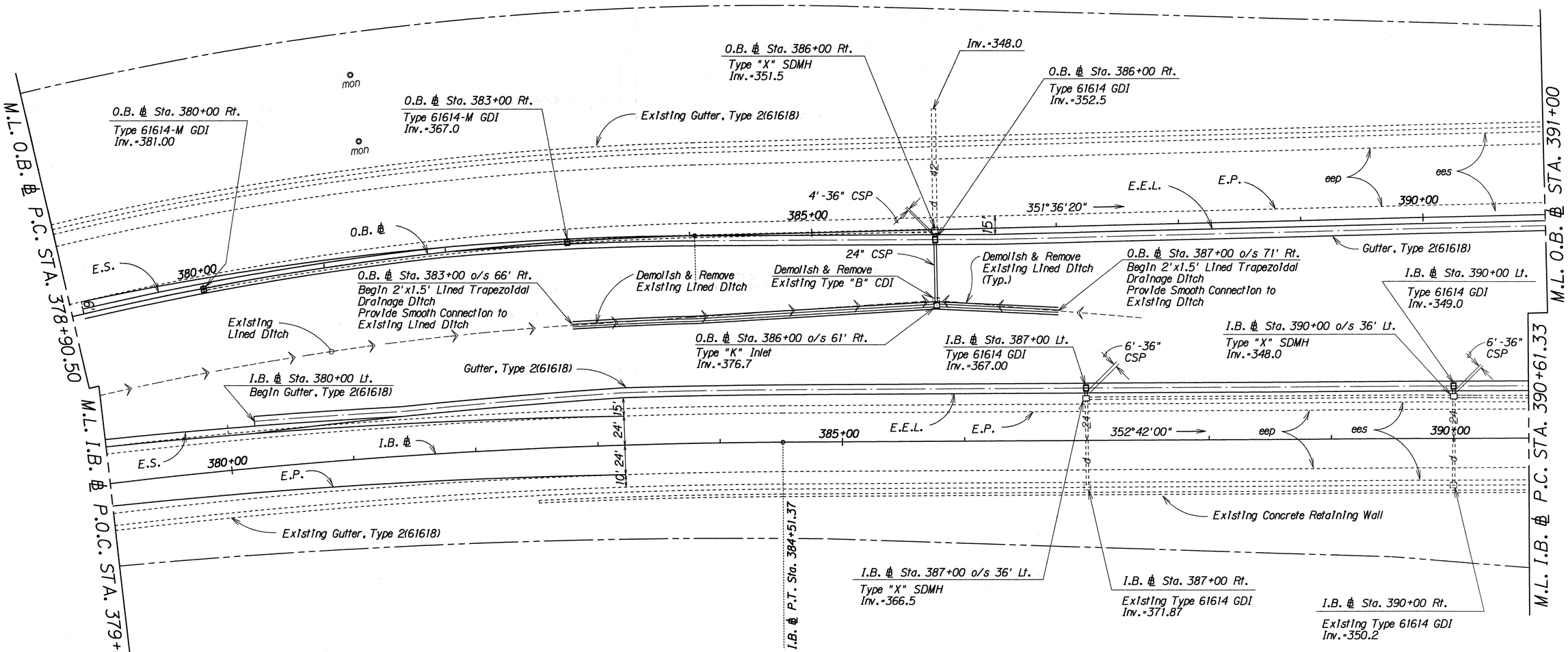

Construct: Gutter, Type 2(61618)
(See Typical Roadway Section For Detail)
I.B. ℄ Sta. 380+00 Lt. to I.B. ℄ Sta. 390+61.33 Lt.
O.B. ℄ Sta. 378+90.50 Rt. to I.B. ℄ Sta. 391+00 Rt.

I.B. ℄ Sta. 387+00 Lt.
Construct: Type 61614 GDI
Install: 36" CSP, Sht. "t"=0.109"

I.B. ℄ Sta. 387+00 o/s=36' Lt.
Construct: Type "X" SDMH
(For Details, See Sht. No. H31)

I.B. ℄ Sta. 390+00 Lt.
Construct: Type 61614 GDI
Install: 36" CSP, Sht. "t"=0.019"

I.B. ℄ Sta. 390+00 o/s=36' Lt.
Construct: Type "X" SDMH
(For Details, See Sht. No. H31)

ORIGINAL PLAN	SURVEY PLOTTED BY	DATE
	DRAWN BY	
	TRACED BY	
NOTE BOOK	DESIGNED BY	
	QUANTITIES BY	
No.	CHECKED BY	

STATE OF HAWAII
DEPARTMENT OF TRANSPORTATION
HIGHWAYS DIVISION

DRAINAGE PLAN

INTERSTATE RTE. H-2, HOV LANES, PH. II
Mililani Interchange to Waipio Interchange
F.A.I. PROJECT NO. IR-H2-1(27)

Scale: 1" = 40' Date: Apr., 1992

FED. ROAD DIST. NO.	STATE	FED. AID PROJ. NO.	FISCAL YEAR	SHEET NO.	TOTAL SHEETS
HAWAII	HAW.	IR-H2-1(27)	1992	115	223

TRUE NORTH
SCALE: 1" = 40'

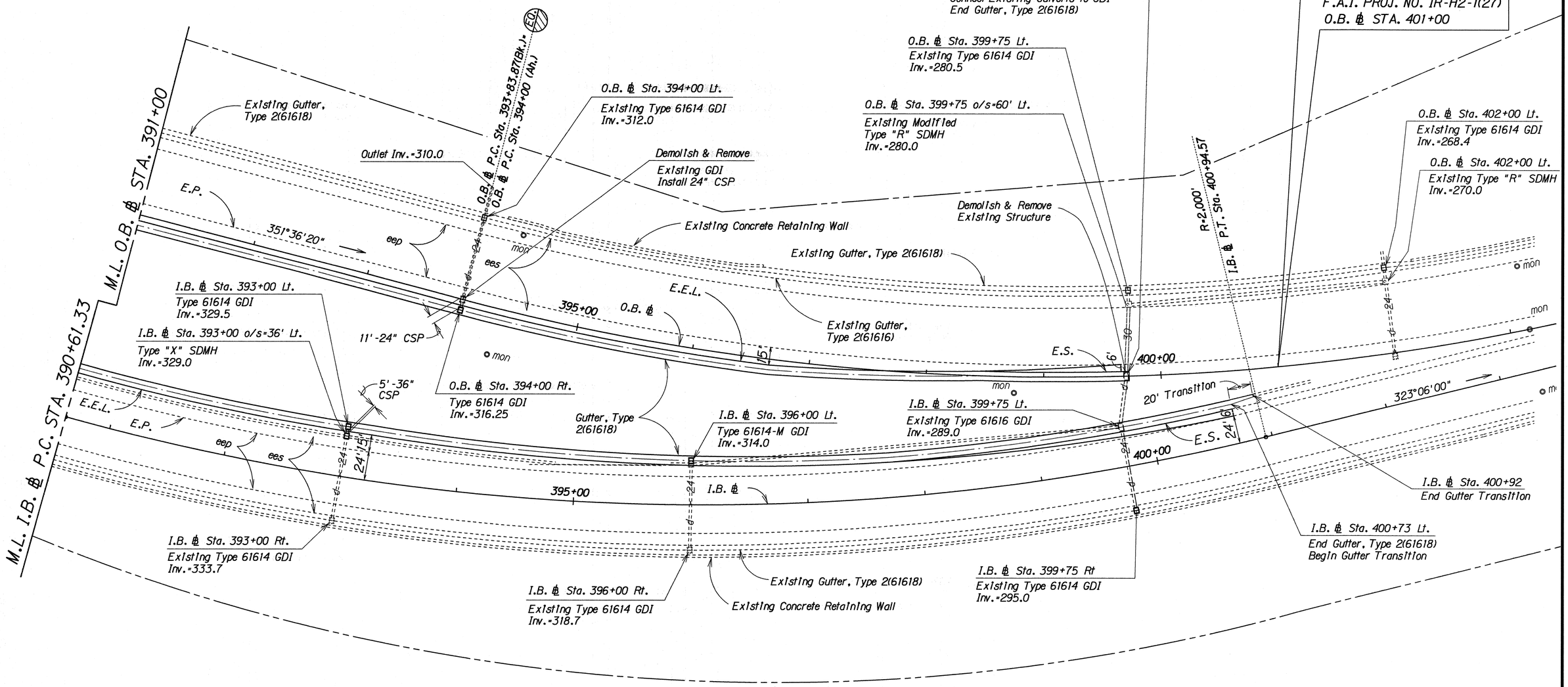

Construct: Gutter, Type 2(61618)
(See Typical Roadway Section For Detail)

I.B. ℄ Sta. 390+61.33 Lt. to I.B. ℄ Sta. 400+92 Lt.
O.B. ℄ Sta. 391+00 Rt. to O.B. ℄ Sta. 399+70 Rt.

I.B. ℄ Sta. 393+00 Lt.

Construct: Type 61614 GDI
Install: 36" CSP, Sht. "t"=0.109"

I.B. ℄ Sta. 393+00 o/s=36' Lt.

Construct: Type "X" SDMH
(For Details, See Sht. No. H31)

I.B. ℄ Sta. 396+00 Lt.

Construct: Type 61614-M CDI
(For Details, See Sht. No. H25)

ORIGINAL PLAN	SURVEY PLOTTED BY	DATE
	DRAWN BY	
	TRACED BY	
NOTE BOOK	DESIGNED BY	
	QUANTITIES BY	
	CHECKED BY	
No.		

STATE OF HAWAII
DEPARTMENT OF TRANSPORTATION
HIGHWAYS DIVISION

DRAINAGE PLAN

INTERSTATE RTE. H-2, HOV LANES, PH. II
Mililani Interchange to Waipio Interchange
F.A.I. PROJECT NO. IR-H2-1(27)

Scale: 1" = 40' Date: Apr., 1992

FED. ROAD DIST. NO.	STATE	FED. AID PROJ. NO.	FISCAL YEAR	SHEET NO.	TOTAL SHEETS
HAWAII	HAW.	IR-H2-1(27)	1992	116	223

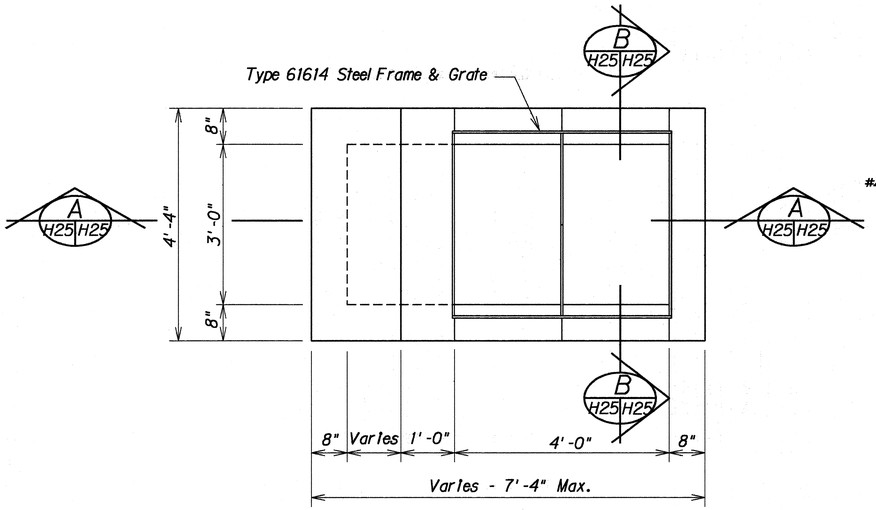

PLAN

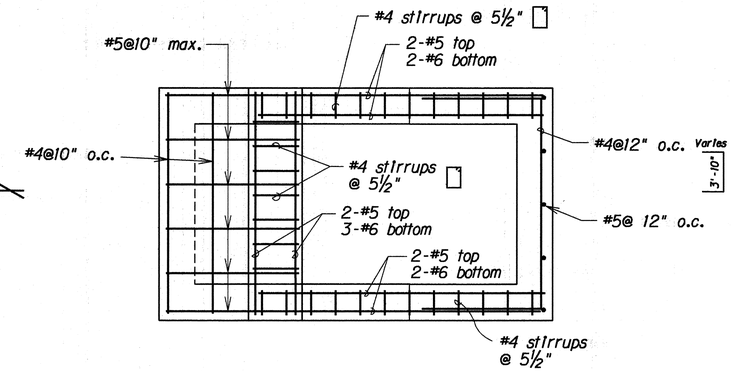

PLAN VIEW OF REINFORCING

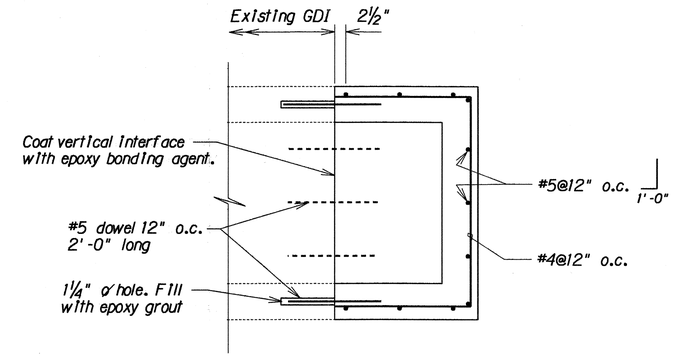

PLAN VIEW OF WALL REINFORCING

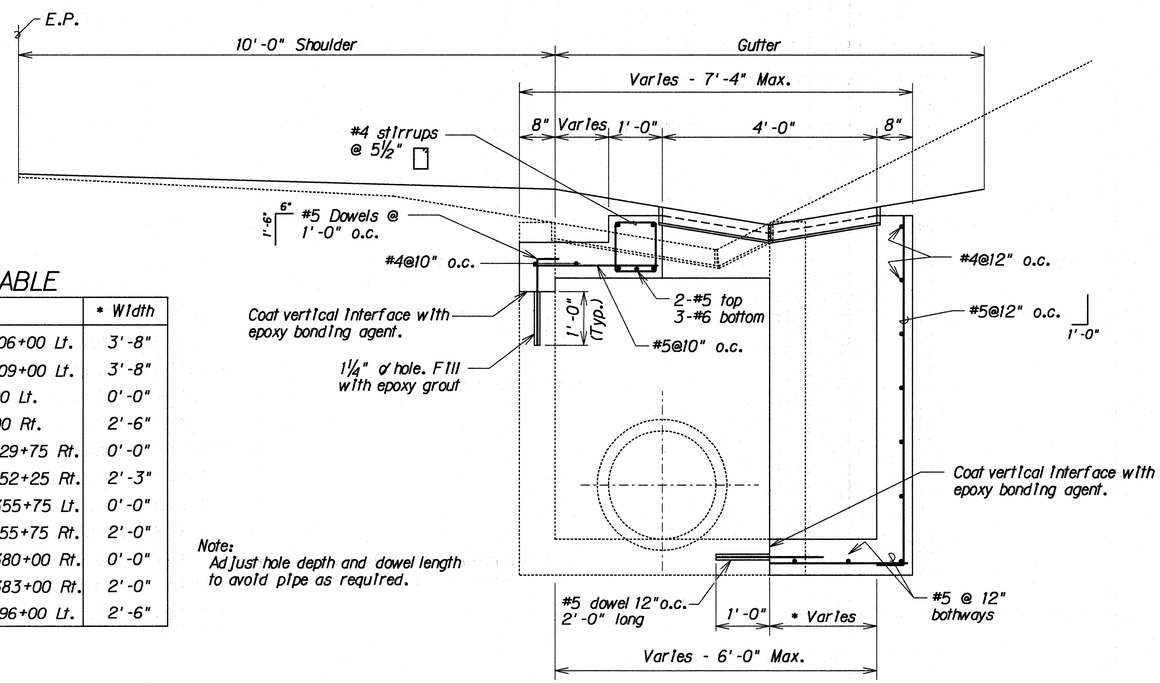

SECTION A H25 H25

TABLE

STA.	* Width
I.B. ℄ Sta. 206+00 Lt.	3'-8"
I.B. ℄ Sta. 209+00 Lt.	3'-8"
℄ Sta. 248+00 Lt.	0'-0"
℄ Sta. 249+00 Rt.	2'-6"
I.B. ℄ Sta. 329+75 Rt.	0'-0"
I.B. ℄ Sta. 352+25 Rt.	2'-3"
O.B. ℄ Sta. 355+75 Lt.	0'-0"
I.B. ℄ Sta. 355+75 Rt.	2'-0"
O.B. ℄ Sta. 380+00 Rt.	0'-0"
O.B. ℄ Sta. 383+00 Rt.	2'-0"
I.B. ℄ Sta. 396+00 Lt.	2'-6"

Note:
Adjust hole depth and dowel length to avoid pipe as required.

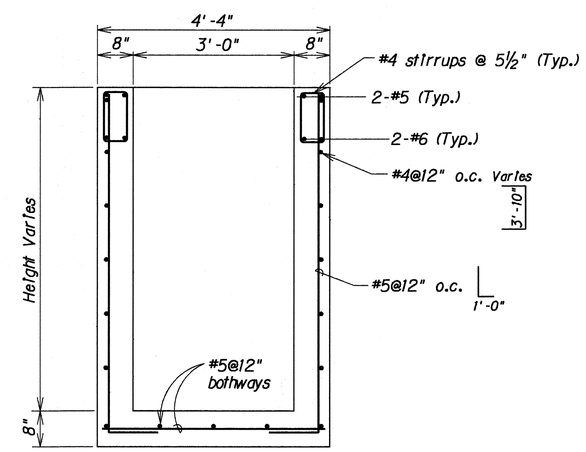

SECTION B H25 H25

STATE OF HAWAII
DEPARTMENT OF TRANSPORTATION
HIGHWAYS DIVISION

DRAINAGE DETAILS

INTERSTATE RTE. H-2, HOV LANES, PH. II
Mililani Interchange to Waipio Interchange
F.A.I. PROJECT NO. IR-H2-1(27)

Scale: ¾" = 1'-0" Date: Apr., 1992

SHEET No. H25 OF 42 SHEETS

DETAILS OF TYPE 61614-M GRATED DROP INLET

ORIGINAL PLAN | SURVEY PLOTTED BY | DRAWN BY | TRACED BY | DESIGNED BY | QUANTITIES BY | CHECKED BY | DATE | NOTE BOOK No.

/usr2/lennox/11h2h25.dgn

FED. ROAD DIST. NO.	STATE	FED. AID PROJ. NO.	FISCAL YEAR	SHEET NO.	TOTAL SHEETS
HAWAII	HAW.	IR-H2-1(27)	1992	117	223

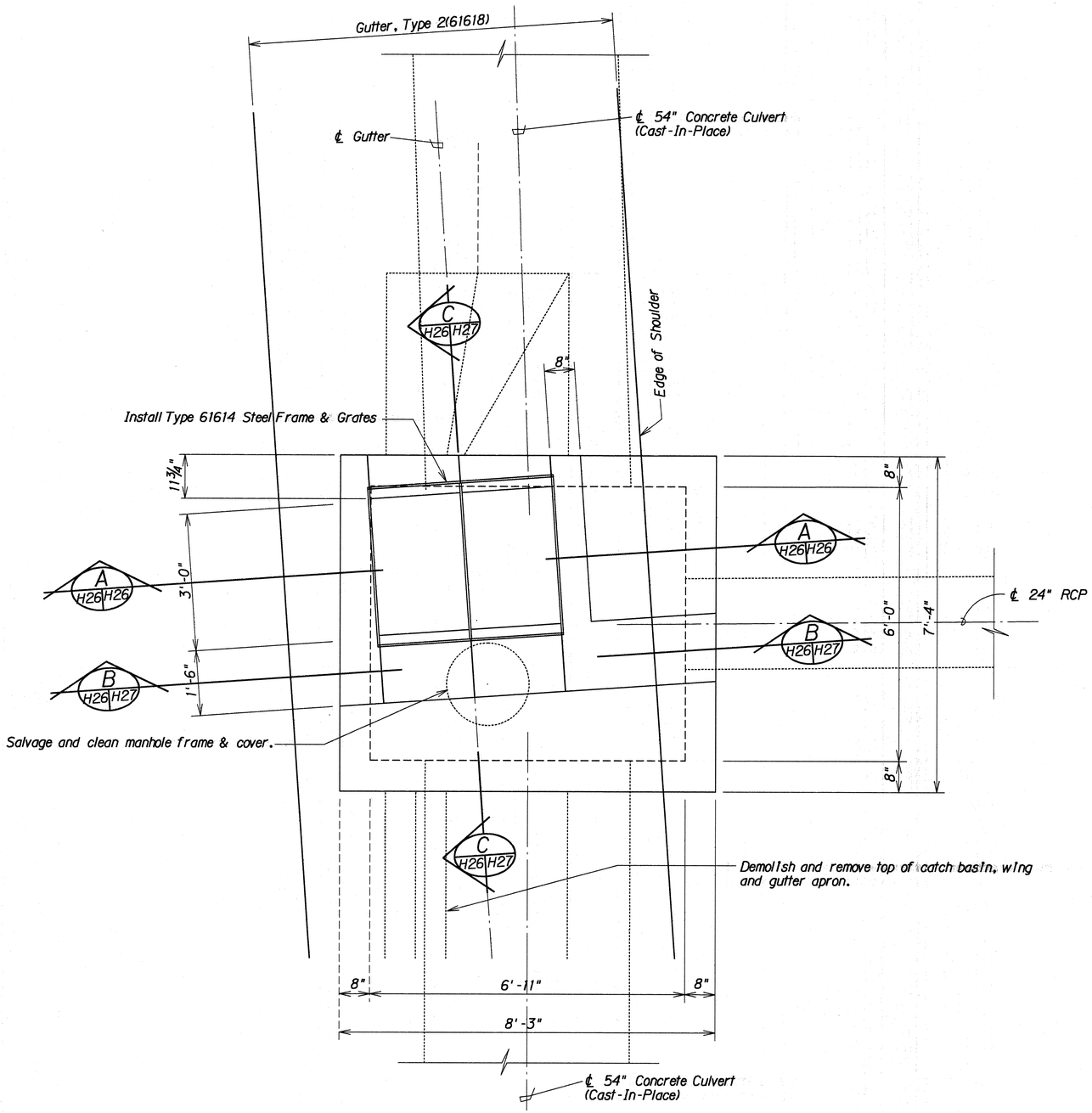

PLAN

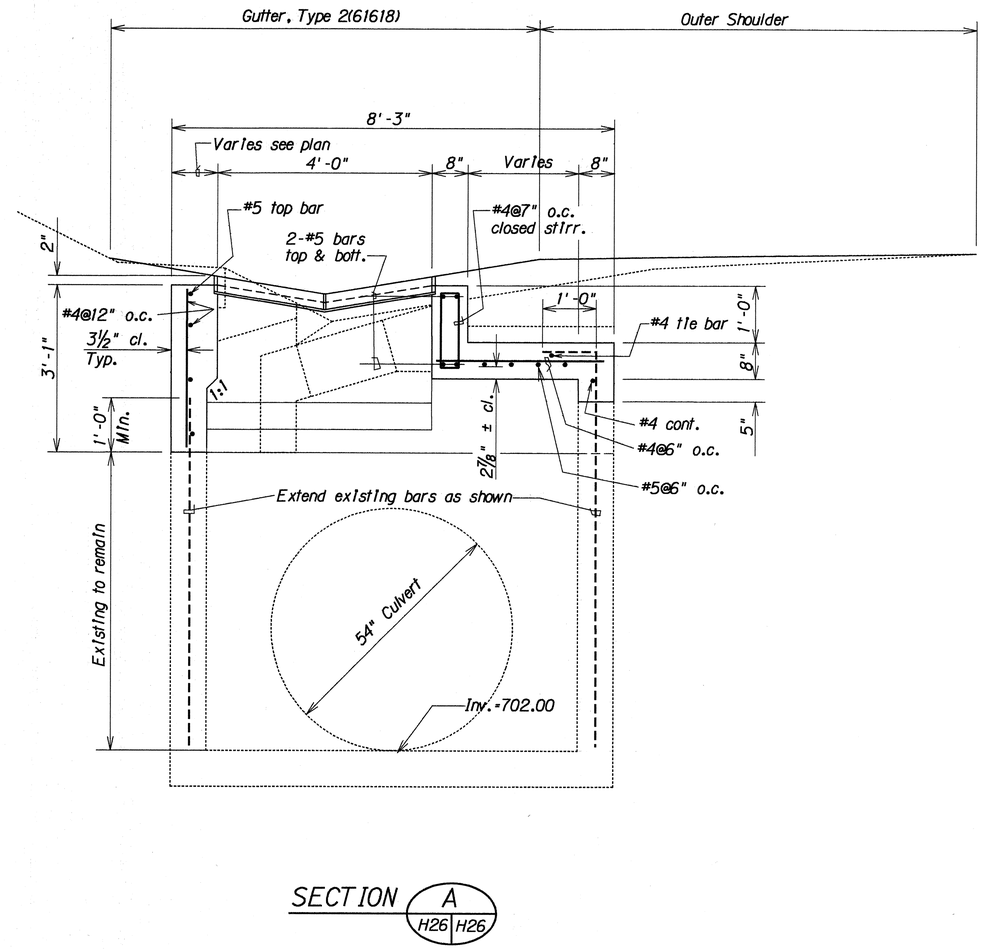

SECTION A H26 H26

DETAILS OF TYPE 61614-N GDI AT O.B. ℄ STA. 209+00 LT.

ORIGINAL PLAN	SURVEY PLOTTED BY ____ DATE
	DRAWN BY ____
	TRACED BY ____
NOTE BOOK	DESIGNED BY ____
	QUANTITIES BY ____
No.	CHECKED BY ____

STATE OF HAWAII
DEPARTMENT OF TRANSPORTATION
HIGHWAYS DIVISION

DRAINAGE DETAILS

INTERSTATE RTE. H-2, HOV LANES, PH. II
Mililani Interchange to Waipio Interchange
F.A.I. PROJECT NO. IR-H2-1(27)

Scale: ¾" = 1'-0" Date: Apr., 1992

SHEET No. H26 OF 42 SHEETS

/11h2h26.dgn

FED. ROAD DIST. NO.	STATE	FED. AID PROJ. NO.	FISCAL YEAR	SHEET NO.	TOTAL SHEETS
HAWAII	HAW.	IR-H2-1(27)	1992	118	223

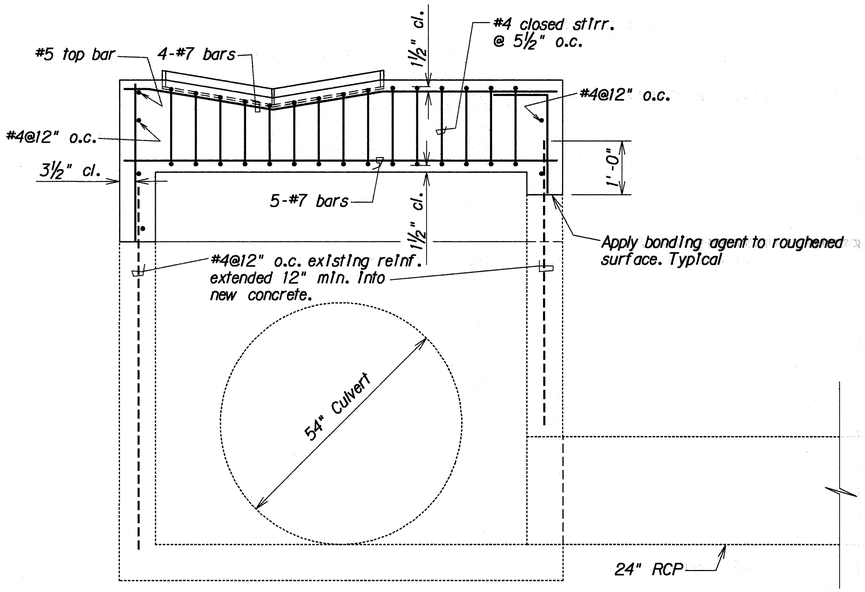

SECTION B
H26 H27

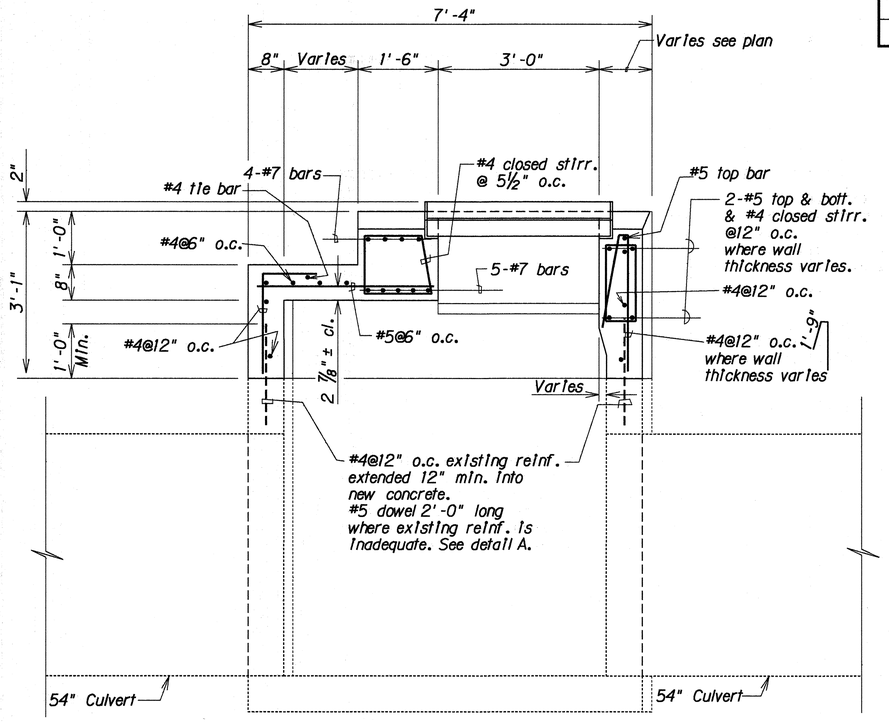

SECTION C
H26 H27

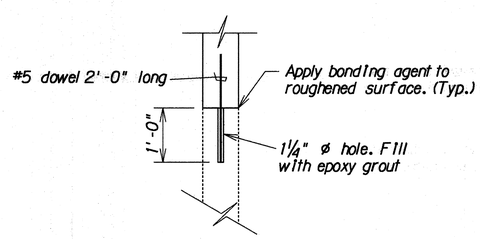

DETAIL "A"

DETAILS OF TYPE 61614-N GDI AT O.B. ℄ STA. 209+00 LT.

ORIGINAL PLAN	SURVEY PLOTTED BY ____ DATE
	DRAWN BY
	TRACED BY
NOTE BOOK	DESIGNED BY
	QUANTITIES BY
No.	CHECKED BY

STATE OF HAWAII
DEPARTMENT OF TRANSPORTATION
HIGHWAYS DIVISION

DRAINAGE DETAILS

INTERSTATE RTE. H-2, HOV LANES, PH. II
Mililani Interchange to Waipio Interchange
F.A.I. PROJECT NO. IR-H2-1(27)

Scale: ¾" = 1'-0" Date: Apr., 1992

SHEET No. H27 OF 42 SHEETS

/11h2h27.dgn

FED. ROAD DIST. NO.	STATE	FED. AID PROJ. NO.	FISCAL YEAR	SHEET NO.	TOTAL SHEETS
HAWAII	HAW.	IR-H2-1(27)	1992	119	223

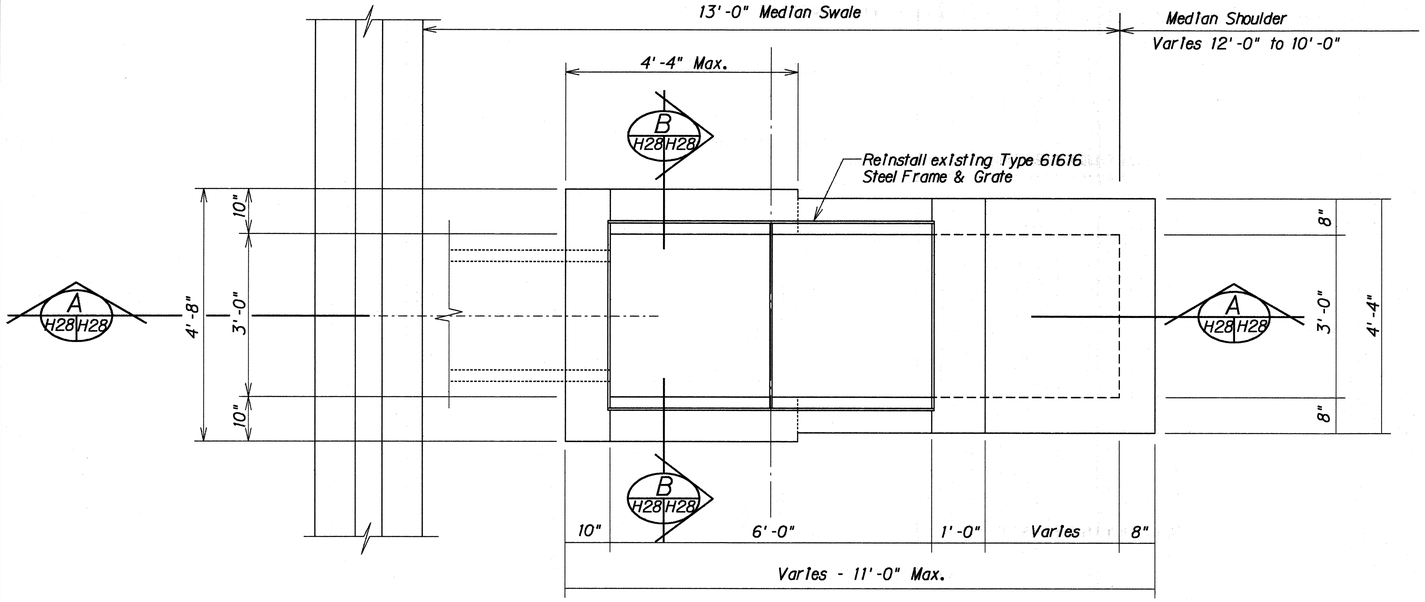

PLAN

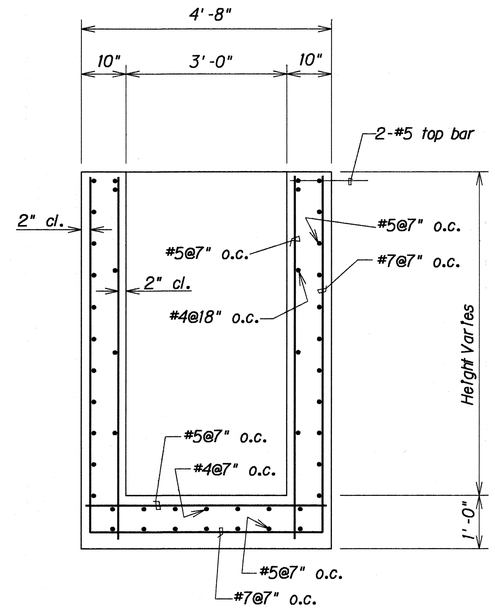

SECTION B H28 H28

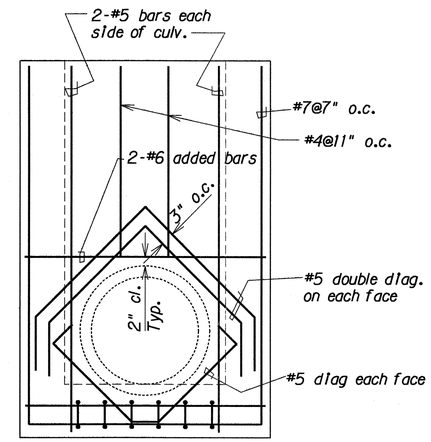

ADDED REINFORCING AROUND CULVERT

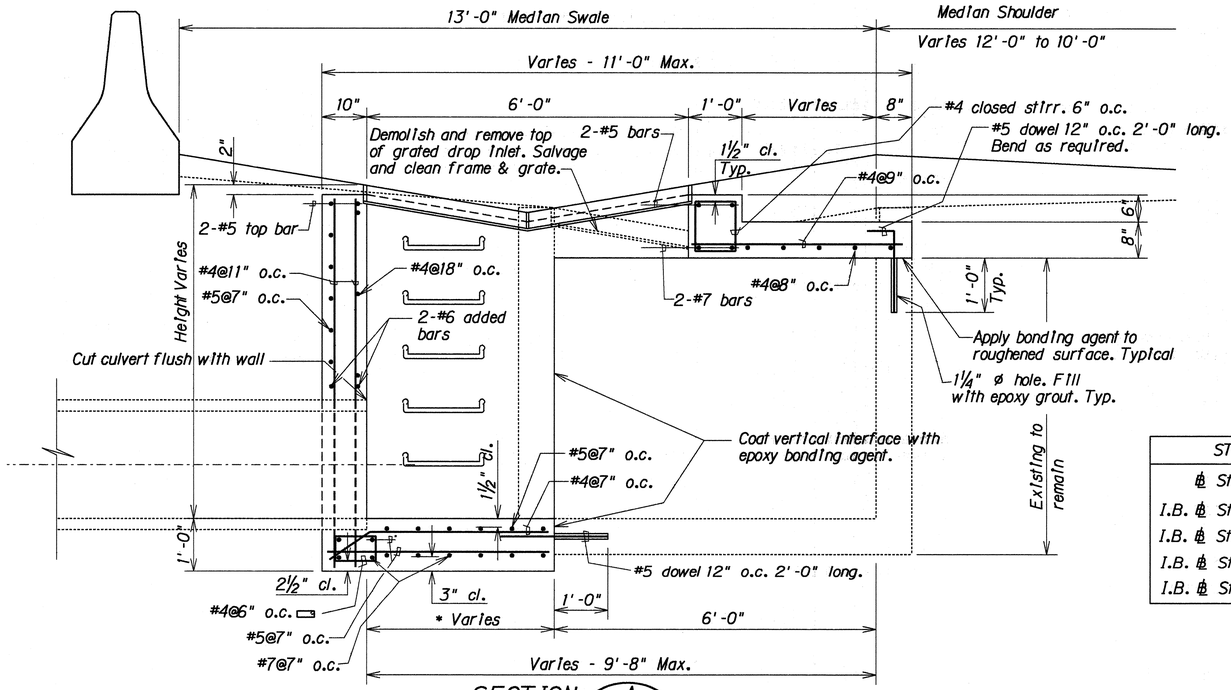

SECTION A H28 H28

DETAILS OF TYPE 61616-M GRATED DROP INLET

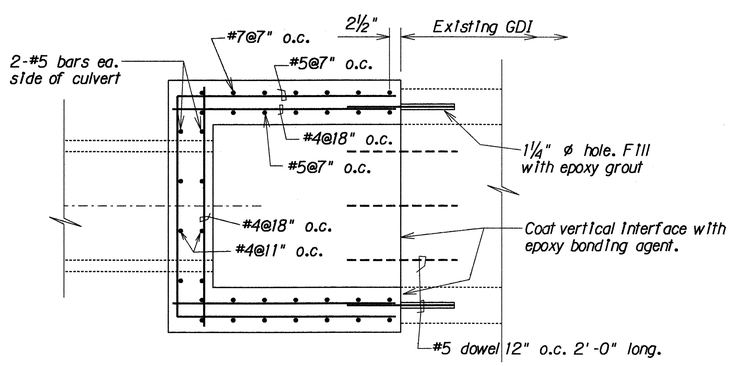

PLAN VIEW OF WALL REINFORCING

TABLE

STA.	* Width
℄ Sta. 194+00	3'-2"
I.B. ℄ Sta. 197+00 Lt.	3'-8"
I.B. ℄ Sta. 200+00 Lt.	3'-8"
I.B. ℄ Sta. 203+00 Lt.	3'-8"
I.B. ℄ Sta. 215+25 Lt.	3'-8"

ORIGINAL PLAN	SURVEY PLOTTED BY	DATE
	DRAWN BY	
	TRACED BY	
NOTE BOOK	DESIGNED BY	
	QUANTITIES BY	
No.	CHECKED BY	

STATE OF HAWAII
DEPARTMENT OF TRANSPORTATION
HIGHWAYS DIVISION

DRAINAGE DETAILS

INTERSTATE RTE. H-2, HOV LANES, PH. II
Mililani Interchange to Waipio Interchange
F.A.I. PROJECT NO. IR-H2-1(27)

Scale: ¾" = 1'-0" Date: Apr., 1992

SHEET No. H28 OF 42 SHEETS

/11h2h28.dgn

FED. ROAD DIST. NO.	STATE	FED. AID PROJ. NO.	FISCAL YEAR	SHEET NO.	TOTAL SHEETS
HAWAII	HAW.	IR-H2-1(27)	1992	120	223

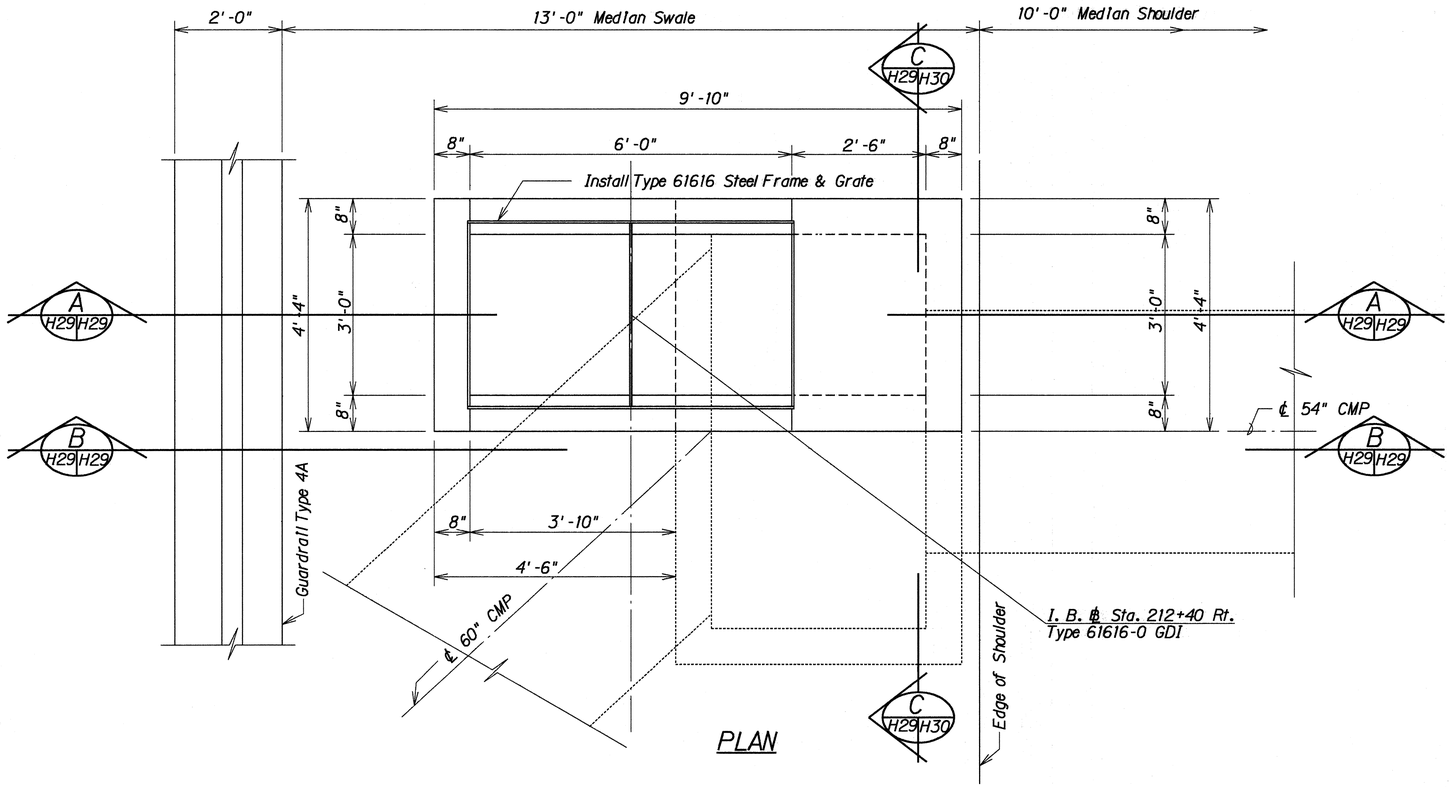

PLAN

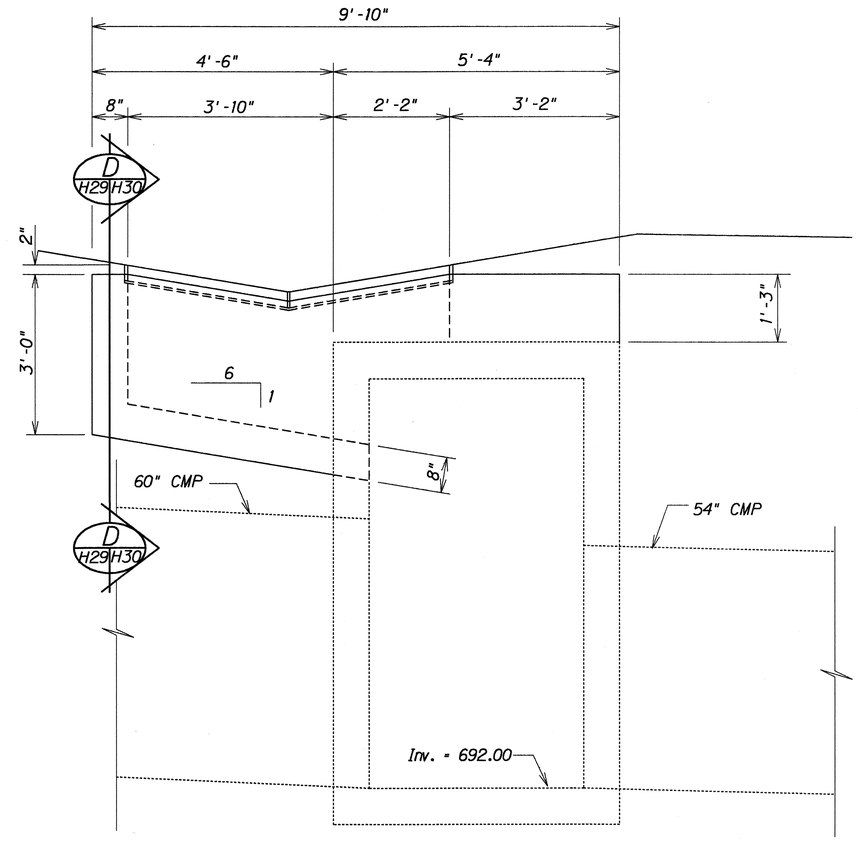

SECTION B H29 H29

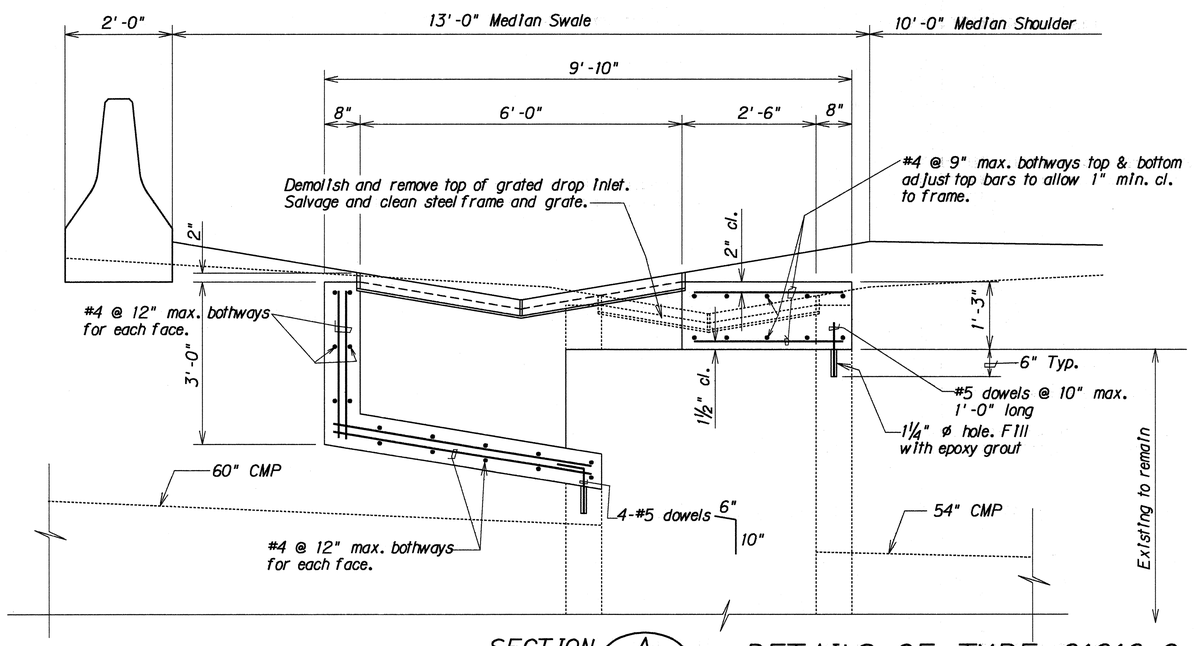

SECTION A H29 H29

DETAILS OF TYPE 61616-0 GDI AT I.B. ⅊ STA. 212+40 RT.

STATE OF HAWAII
DEPARTMENT OF TRANSPORTATION
HIGHWAYS DIVISION

DRAINAGE DETAILS

INTERSTATE RTE. H-2, HOV LANES, PH. II
Mililani Interchange to Waipio Interchange
F.A.I. PROJECT NO. IR-H2-1(27)

Scale: ¾" = 1'-0" Date: Apr., 1992

SHEET No. H29 OF 42 SHEETS

ORIGINAL PLAN	SURVEY PLOTTED BY	DATE
	DRAWN BY	
	TRACED BY	
NOTE BOOK	DESIGNED BY	
	QUANTITIES BY	
No.	CHECKED BY	

/usr2/lennox/11h2h29.dgn

FED. ROAD DIST. NO.	STATE	FED. AID PROJ. NO.	FISCAL YEAR	SHEET NO.	TOTAL SHEETS
HAWAII	HAW.	IR-H2-1(27)	1992	121	223

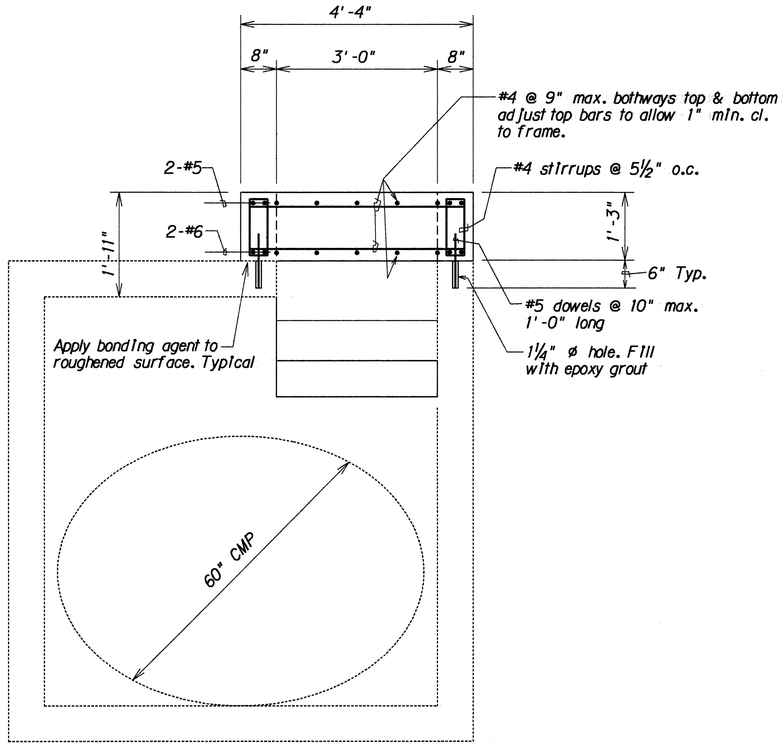

SECTION C (H29 | H30)

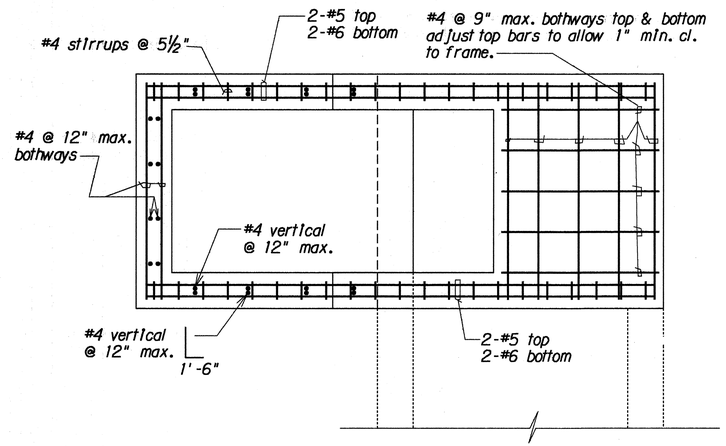

PLAN VIEW OF WALL & TOP SLAB REINFORCING

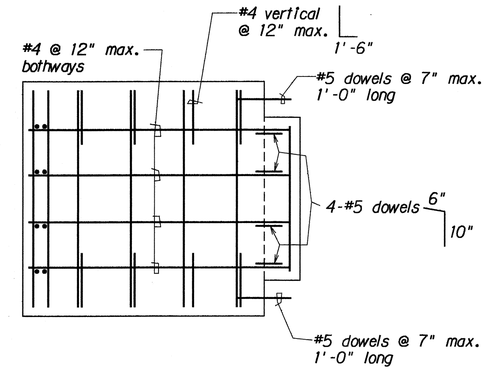

PLAN VIEW OF BOTTOM SLAB REINFORCING

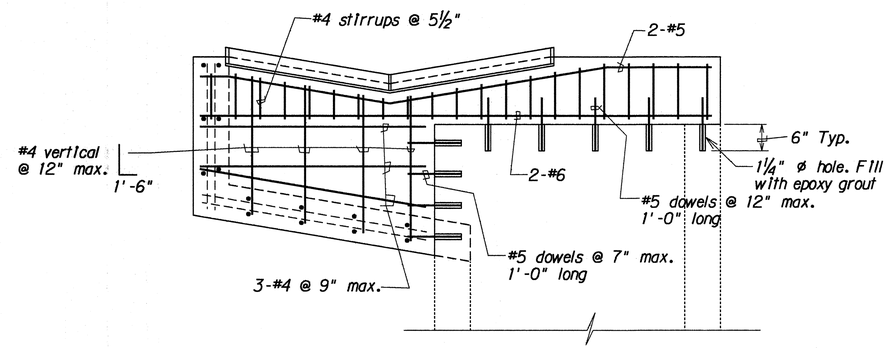

ELEVATION VIEW OF WALL & BEAM REINFORCING

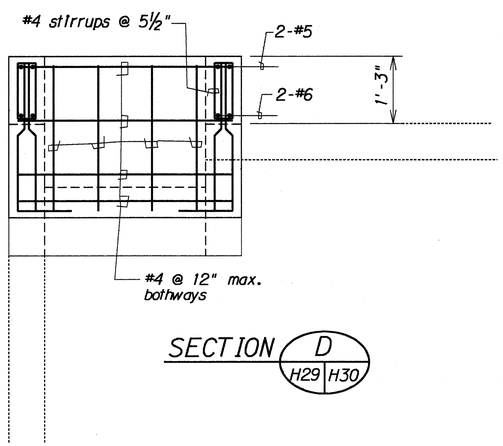

SECTION D (H29 | H30)

DETAILS OF TYPE 61616-0 GDI AT I.B. ℄ STA. 212+40 RT.

ORIGINAL PLAN	SURVEY PLOTTED BY
	DRAWN BY
	TRACED BY
NOTE BOOK	DESIGNED BY
	QUANTITIES BY
	CHECKED BY
	DATE
	No.

STATE OF HAWAII
DEPARTMENT OF TRANSPORTATION
HIGHWAYS DIVISION

DRAINAGE DETAILS

INTERSTATE RTE. H-2, HOV LANES, PH. II
Mililani Interchange to Waipio Interchange
F.A.I. PROJECT NO. IR-H2-1(27)

Scale: ¾" = 1'-0" Date: Apr., 1992

SHEET No. H30 OF 42 SHEETS

/usr2/lennox/11h2h30.dgn

FED. ROAD DIST. NO.	STATE	FED. AID PROJ. NO.	FISCAL YEAR	SHEET NO.	TOTAL SHEETS
HAWAII	HAW.	IR-H2-1(27)	1992	122	223

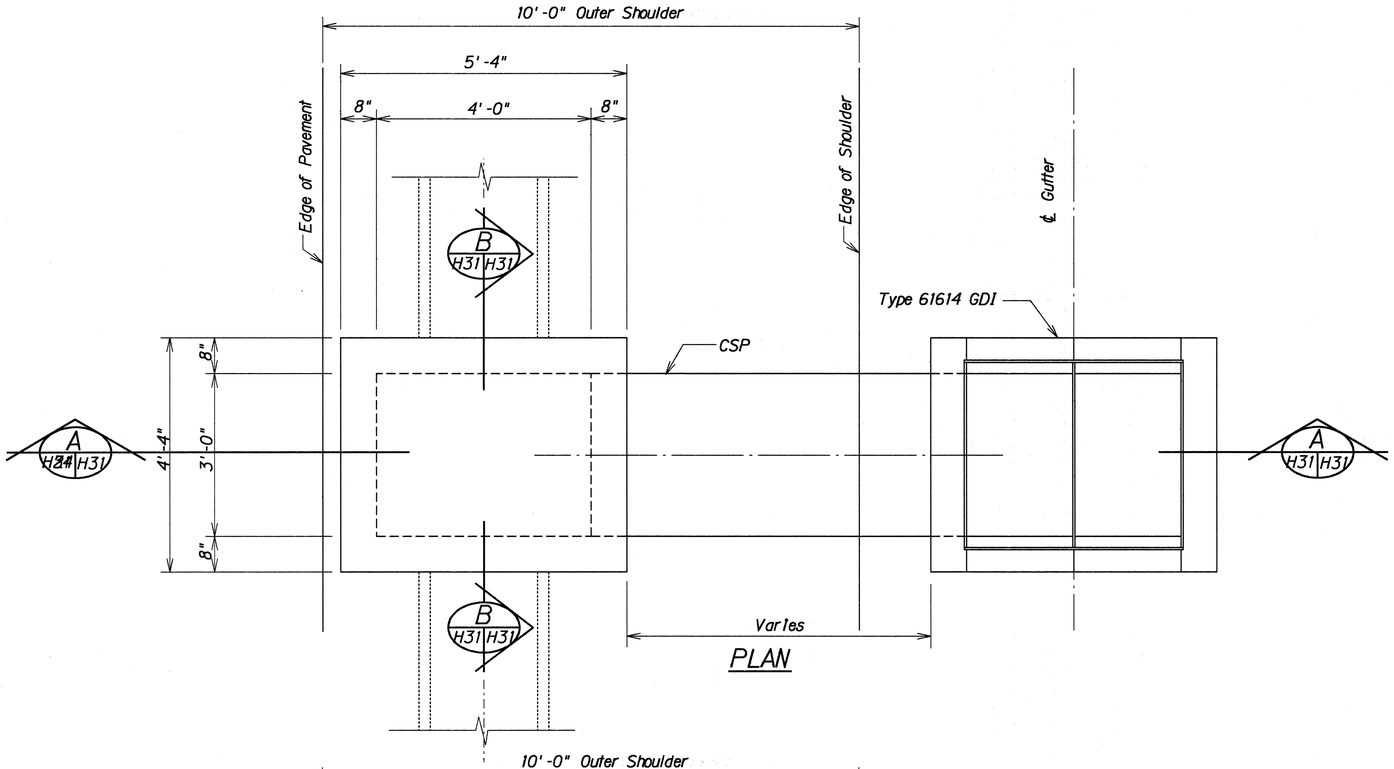

PLAN

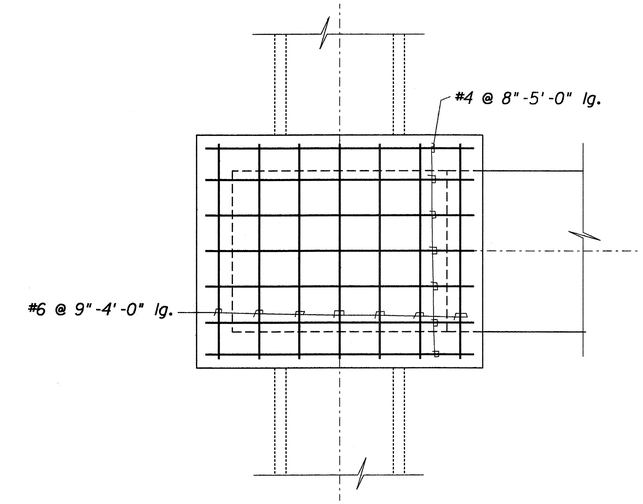

PLAN VIEW OF TOP SLAB REINFORCING

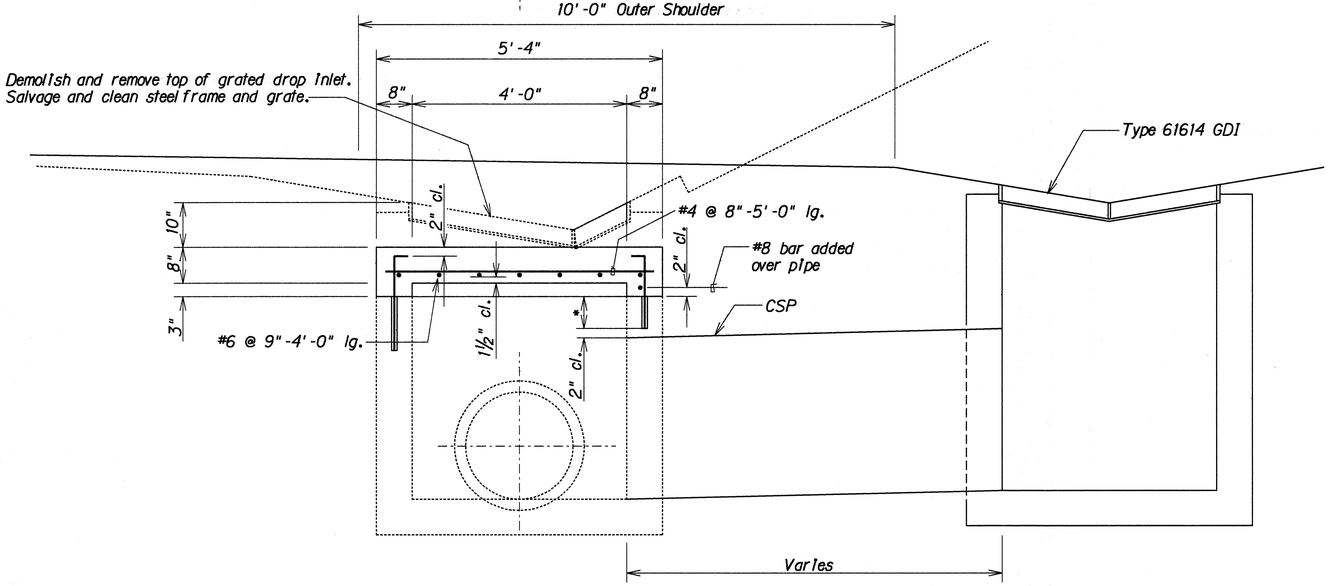

* Reduce 12" embedment over pipe to get 2" of clearance.

SECTION A H31 H31

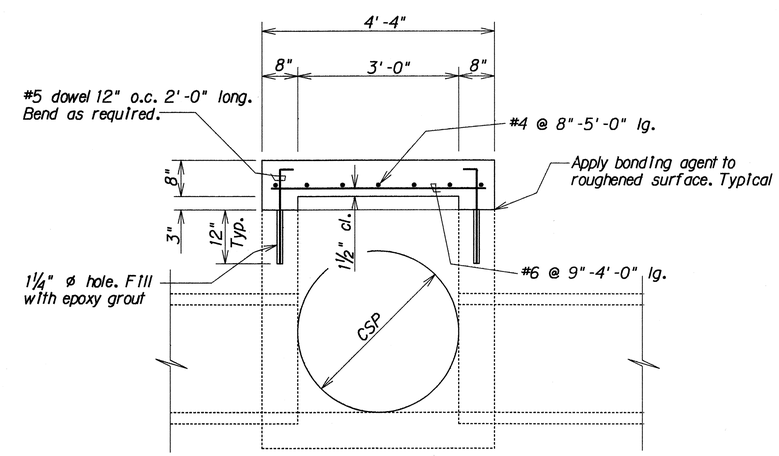

SECTION B H31 H31

DETAILS OF TYPE "X" STORM DRAIN MANHOLE

ORIGINAL PLAN	SURVEY PLOTTED BY	DATE
	DRAWN BY	
	TRACED BY	
NOTE BOOK	DESIGNED BY	
	QUANTITIES BY	
No.	CHECKED BY	

STATE OF HAWAII
DEPARTMENT OF TRANSPORTATION
HIGHWAYS DIVISION

DRAINAGE DETAILS

INTERSTATE RTE. H-2, HOV LANES, PH. II
Mililani Interchange to Waipio Interchange
F.A.I. PROJECT NO. IR-H2-1(27)

Scale: ¾" = 1'-0" Date: Apr., 1992

SHEET No. H31 OF 42 SHEETS

/11h2h31.dgn

FED. ROAD DIST. NO.	STATE	FED. AID PROJ. NO.	FISCAL YEAR	SHEET NO.	TOTAL SHEETS
HAWAII	HAW.	IR-H2-1(27)	1992	123	223

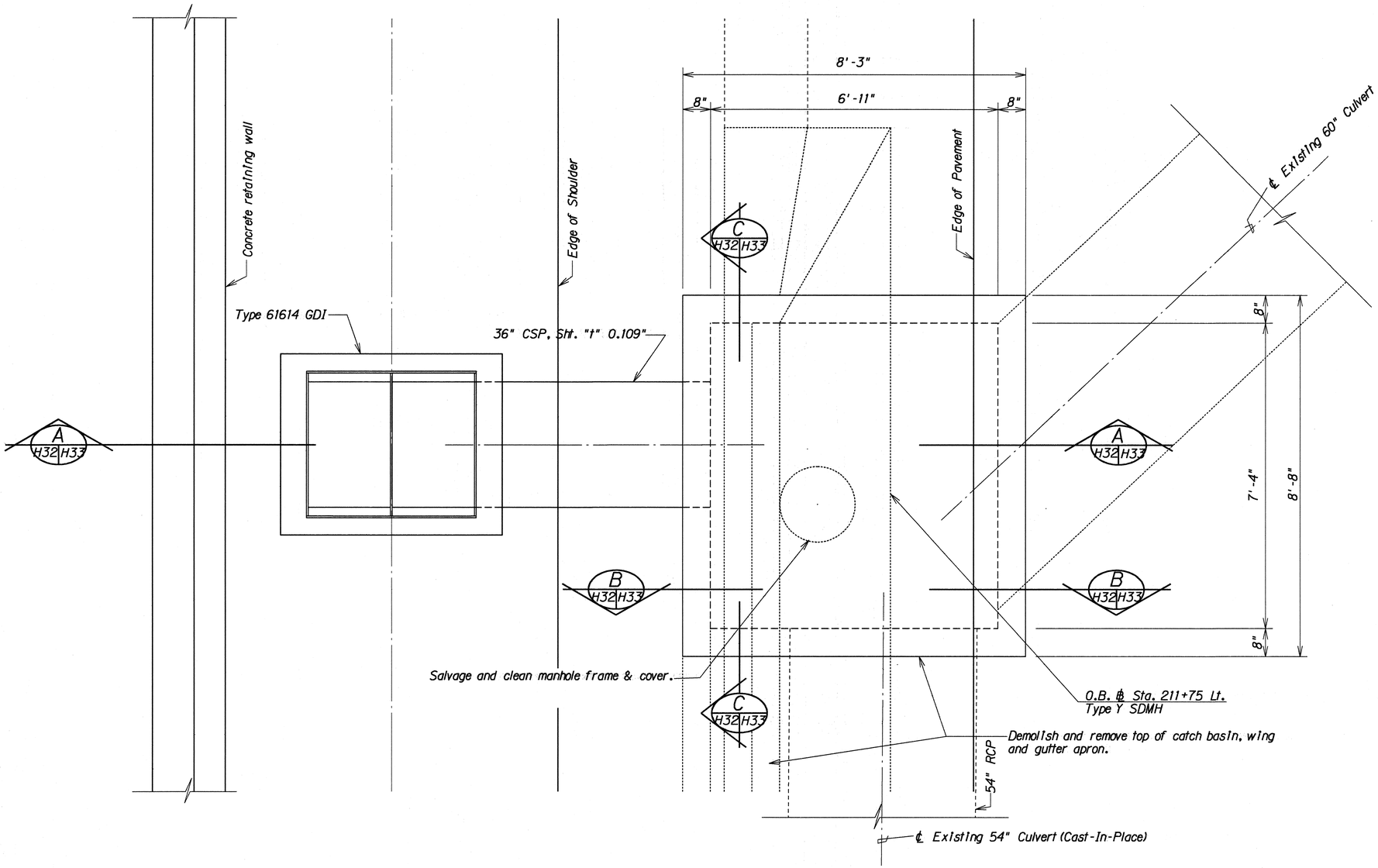

PLAN

DETAILS OF TYPE "Y" STORM DRAIN MANHOLE AT O.B. ℄ STA. 211+75 O/S 52' LT.

ORIGINAL PLAN
SURVEY PLOTTED BY
DRAWN BY
TRACED BY
DESIGNED BY
QUANTITIES BY
CHECKED BY
DATE
NOTE BOOK
No.

STATE OF HAWAII
DEPARTMENT OF TRANSPORTATION
HIGHWAYS DIVISION

DRAINAGE DETAILS

INTERSTATE RTE. H-2, HOV LANES, PH. II
Mililani Interchange to Waipio Interchange
F.A.I. PROJECT NO. IR-H2-1(27)

Scale: 3/4" = 1'-0" Date: Apr., 1992

SHEET No. H32 OF 42 SHEETS

/11h2h32.dgn

FED. ROAD DIST. NO.	STATE	FED. AID PROJ. NO.	FISCAL YEAR	SHEET NO.	TOTAL SHEETS
HAWAII	HAW.	IR-H2-1(27)	1992	124	223

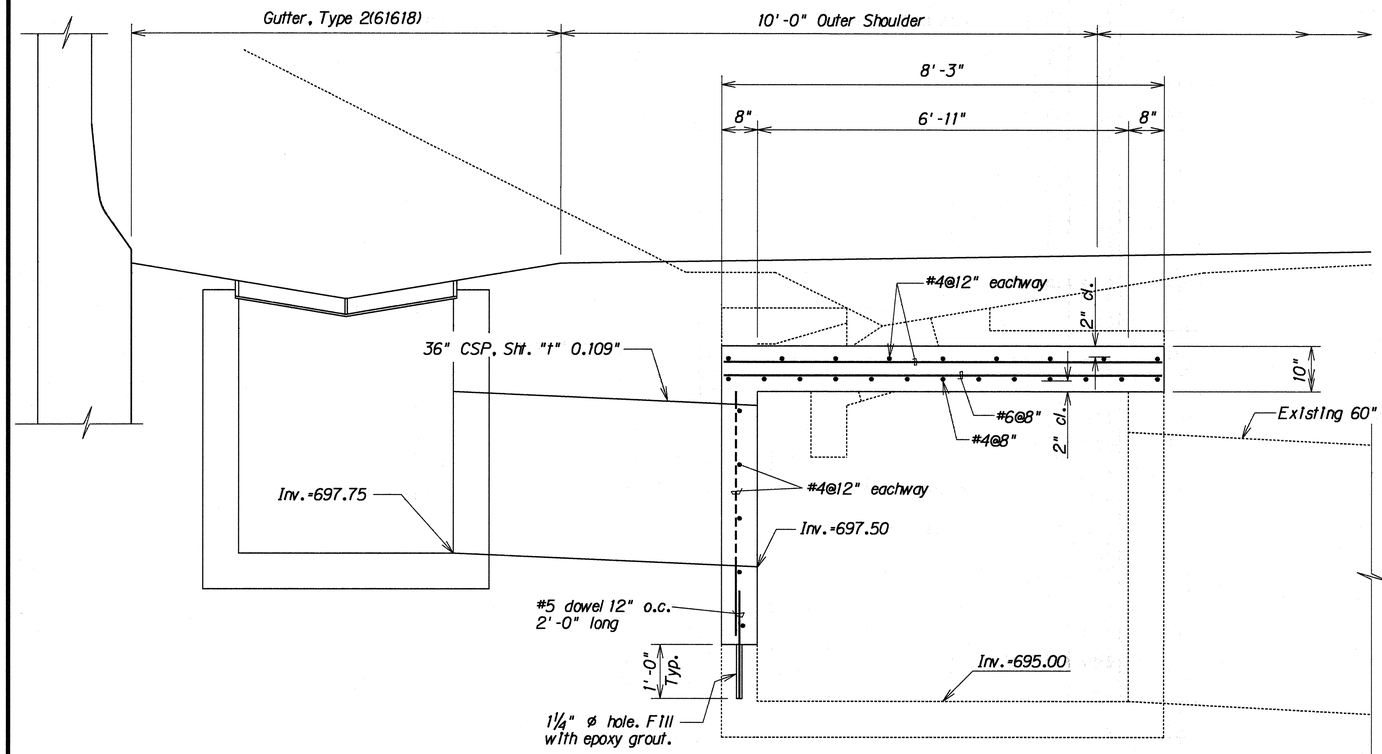

SECTION A H32 H33

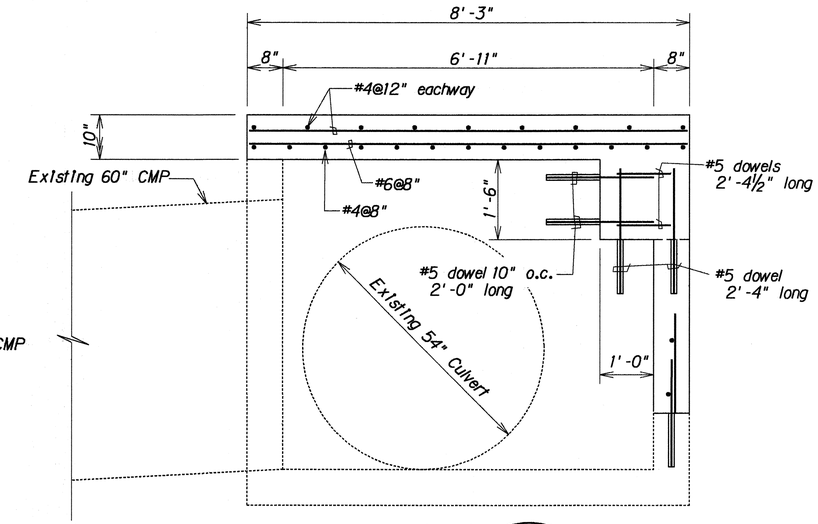

SECTION B H32 H33

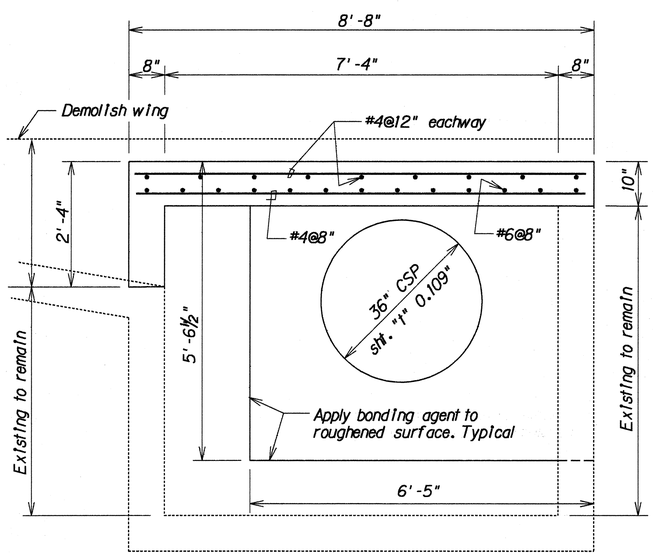

SECTION C H32 H33

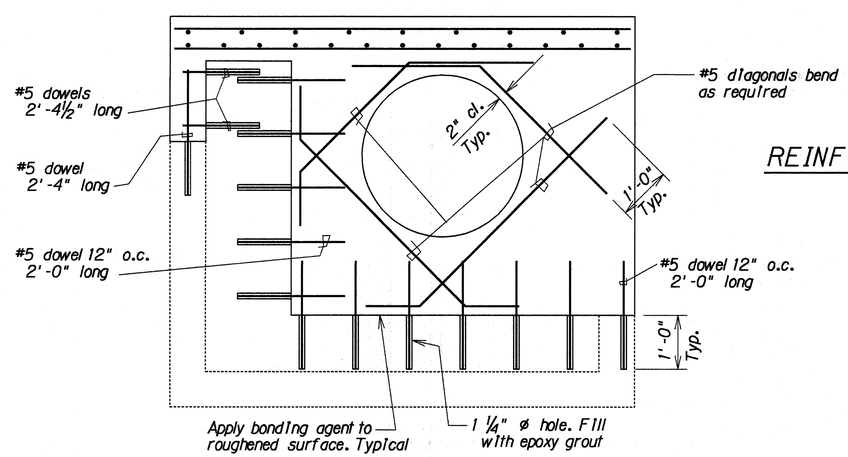

ADDED REINFORCING AROUND CULVERT

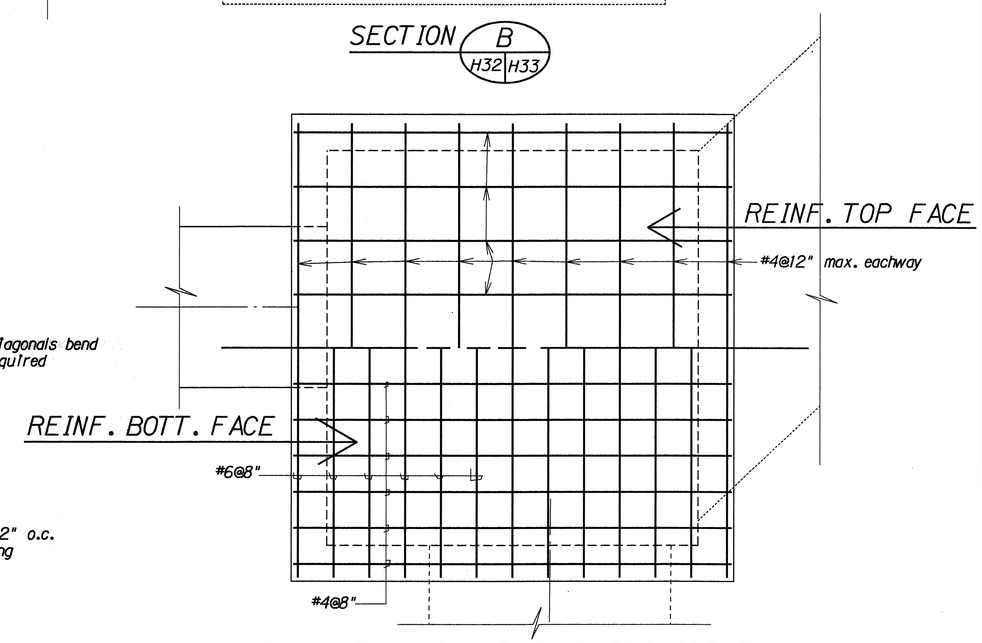

PLAN VIEW OF TOP SLAB REINFORCING

DETAILS OF TYPE "Y" STORM DRAIN MANHOLE AT O.B. ℄ STA. 211+75 O/S 52' LT.

STATE OF HAWAII
DEPARTMENT OF TRANSPORTATION
HIGHWAYS DIVISION

DRAINAGE DETAILS

INTERSTATE RTE. H-2, HOV LANES, PH. II
Mililani Interchange to Waipio Interchange
F.A.I. PROJECT NO. IR-H2-1(27)

Scale: ¾" = 1'-0" Date: Apr., 1992

SHEET No. H33 OF 42 SHEETS

ORIGINAL PLAN | SURVEY PLOTTED BY | DRAWN BY | TRACED BY | DESIGNED BY | QUANTITIES BY | CHECKED BY | DATE | NOTE BOOK | No.

/11h2h33.dgn

FED. ROAD DIST. NO.	STATE	FED. AID PROJ. NO.	FISCAL YEAR	SHEET NO.	TOTAL SHEETS
HAWAII	HAW.	IR-H2-1(27)	1992	125	223

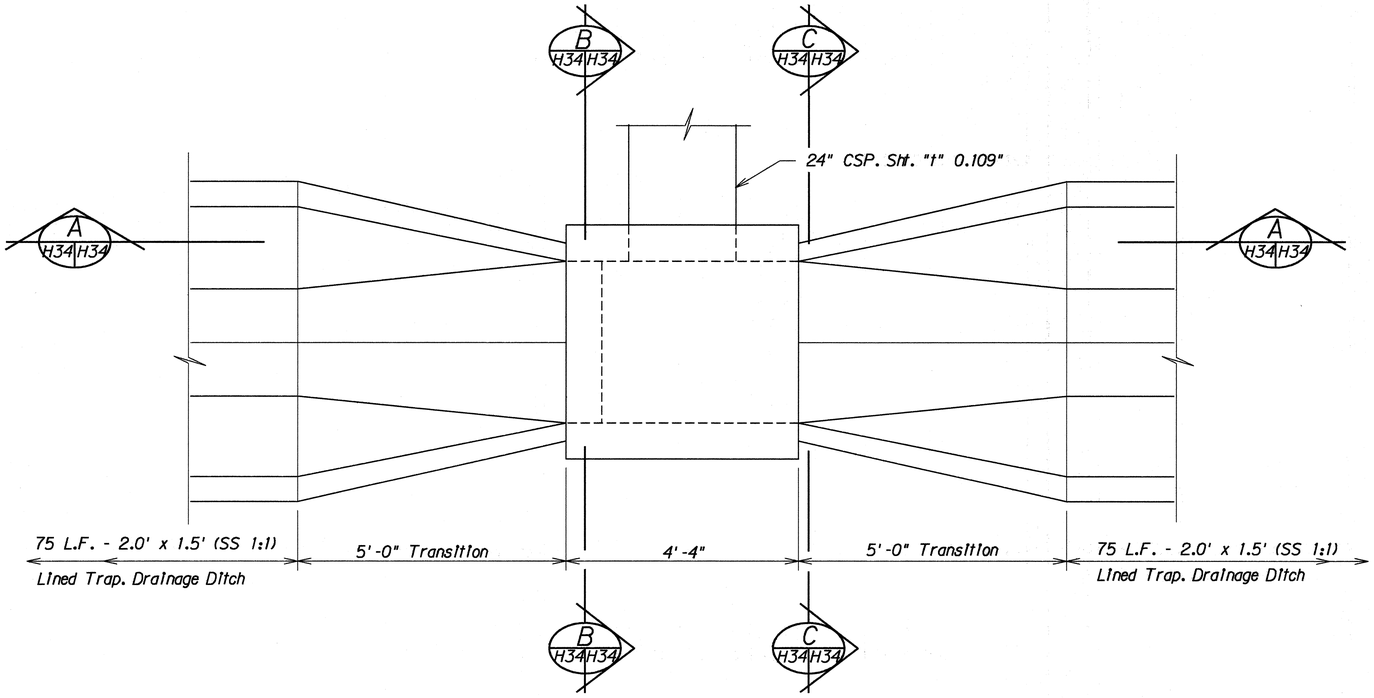

PLAN

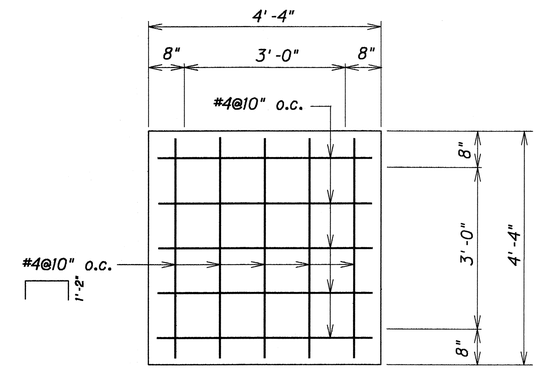

PLAN VIEW OF TOP SLAB REINFORCING

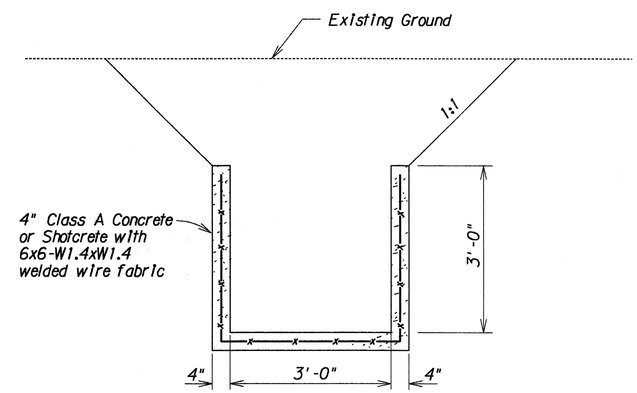

SECTION C H34 H34

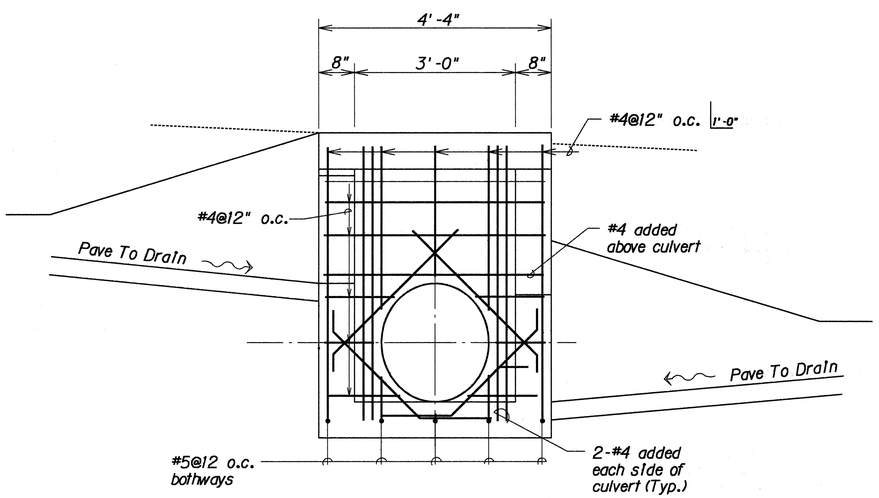

SECTION A H34 H34

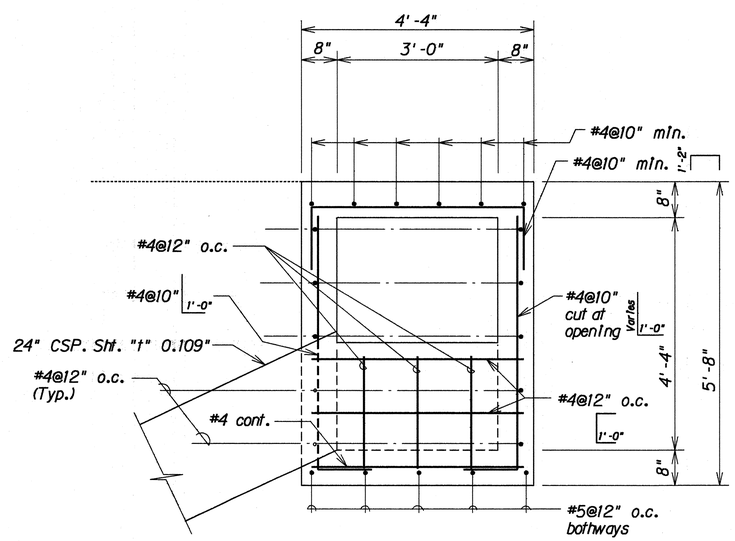

SECTION B H34 H34

DETAIL OF TYPE "K" CONCRETE DROP INLET AT O.B. ℄ STA. 386+00 o/s 61' RT.

ORIGINAL PLAN	SURVEY PLOTTED BY	DATE
	DRAWN BY	
	TRACED BY	
NOTE BOOK	DESIGNED BY	
	QUANTITIES BY	
N.	CHECKED BY	

STATE OF HAWAII
DEPARTMENT OF TRANSPORTATION
HIGHWAYS DIVISION

DRAINAGE DETAILS

INTERSTATE RTE. H-2, HOV LANES, PH. II
Mililani Interchange to Waipio Interchange
F.A.I. PROJECT NO. IR-H2-1(27)

Scale: 3/4" = 1'-0" Date: Apr., 1992

SHEET No. H34 OF 42 SHEETS

/usr2/lennox/11h2h34.dgn

FED. ROAD DIST. NO.	STATE	FED. AID PROJ. NO.	FISCAL YEAR	SHEET NO.	TOTAL SHEETS
HAWAII	HAW.	IR-H2-1(27)	1992	126	223

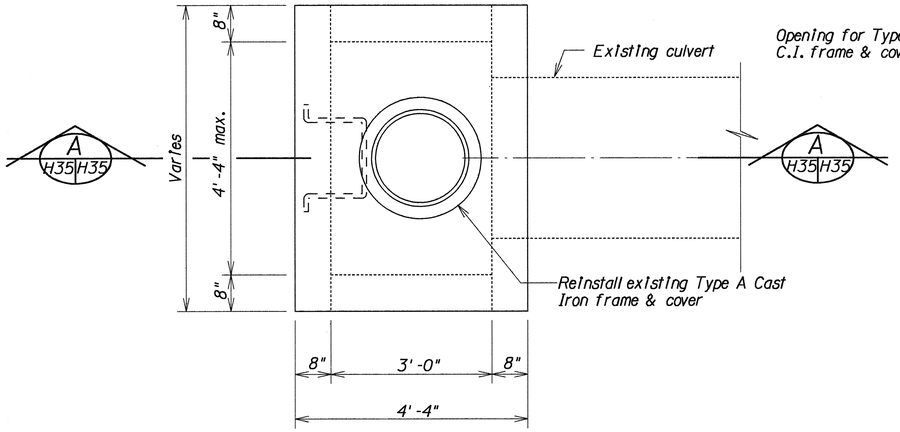

PLAN

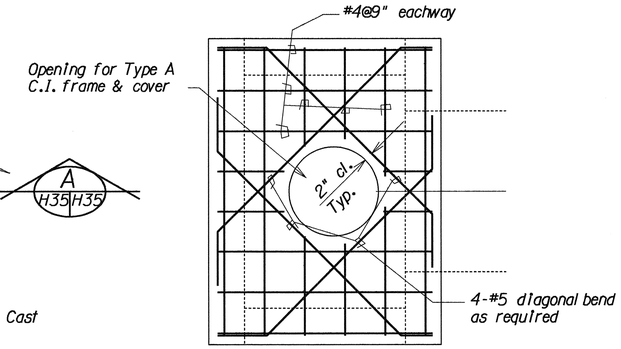

PLAN VIEW OF TOP SLAB REINFORCING

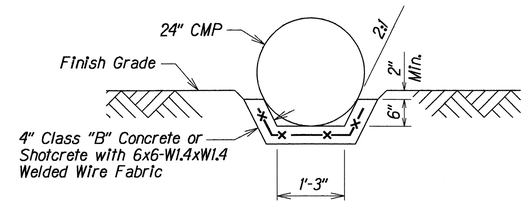

SECTION B H35 H35

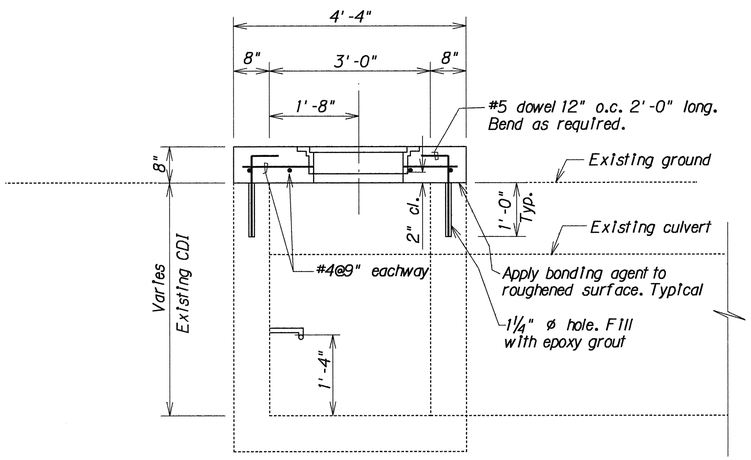

SECTION A H35 H35

DETAILS OF CONCRETE DROP INLET COVER

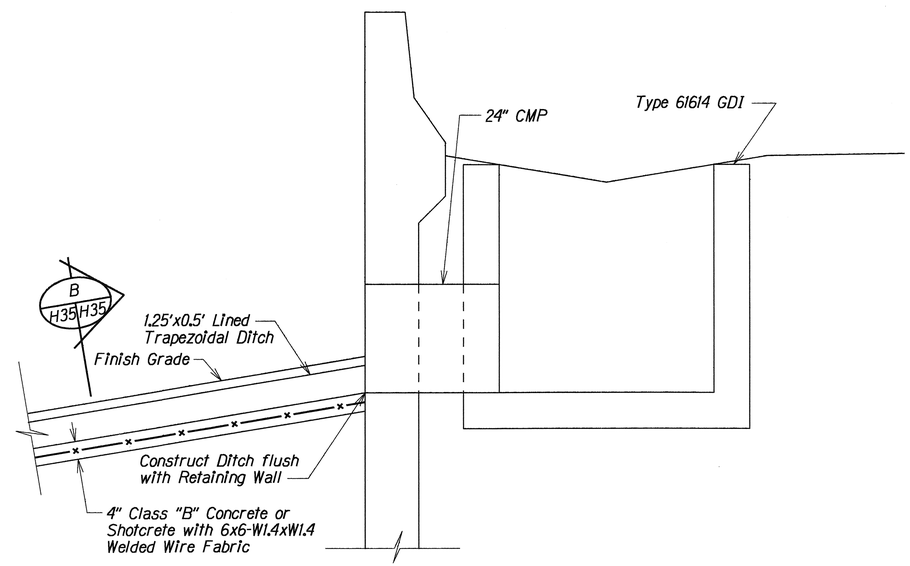

ELEVATION

DETAILS OF 1.25'X0.5' LINED TRAPEZOIDAL DITCH

AT O.B. ℄ STA. 303+00 o/s 98'± LT.

DATE	REVISION
12/06/93	Details of 1.25'x0.5' Lined Trapezoidal Ditch added

STATE OF HAWAII
DEPARTMENT OF TRANSPORTATION
HIGHWAYS DIVISION

DRAINAGE DETAILS

INTERSTATE RTE. H-2, HOV LANES, PH. II
Mililani Interchange to Waipio Interchange
F.A.I. PROJECT NO. IR-H2-1(27)

Scale: ¾" = 1'-0" Date: Apr., 1992

SHEET No. H35 OF 42 SHEETS

C.O. 126

ORIGINAL PLAN — NOTE BOOK No. — SURVEY DRAFTED BY — DATE — DRAWN BY — DATE — TRACED BY — DESIGNED BY — QUANTITIES BY — CHECKED BY

/usr4/dhplan/11h2h35.dgn

FED. ROAD DIST. NO.	STATE	FED. AID PROJ. NO.	FISCAL YEAR	SHEET NO.	TOTAL SHEETS
HAWAII	HAW.	IR-H2-1(27)	1992	127	223

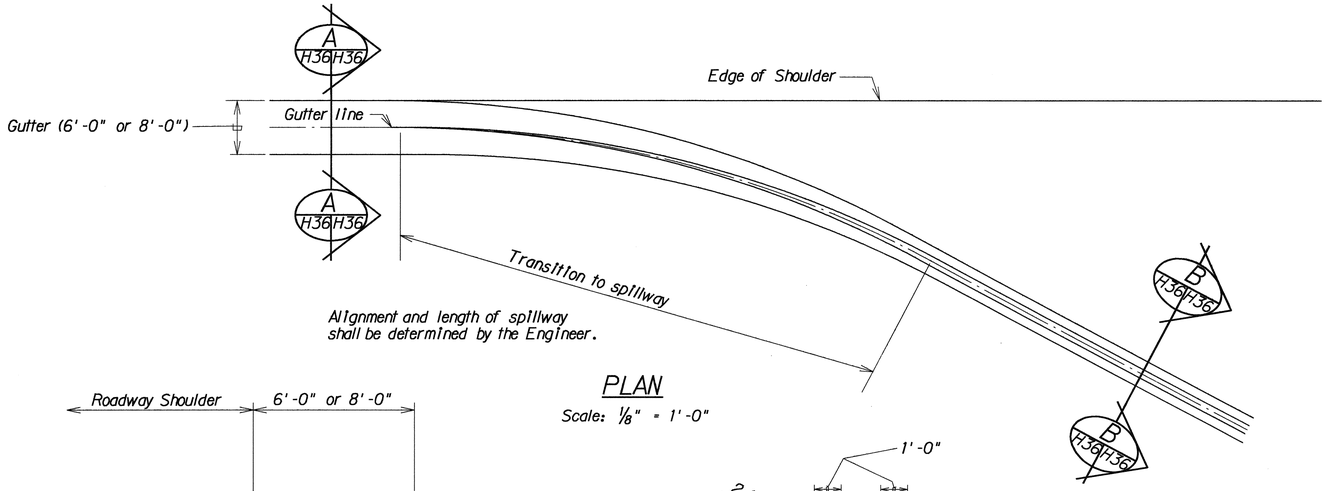

PLAN
Scale: 1/8" = 1'-0"

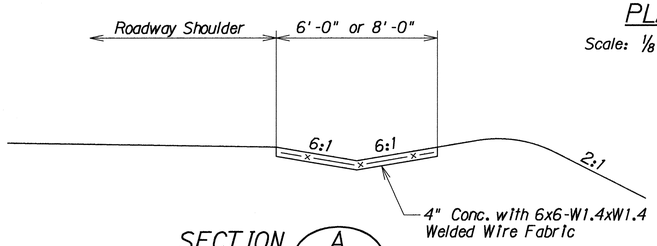

SECTION A H36 H36
Scale: 3/8" = 1'-0"

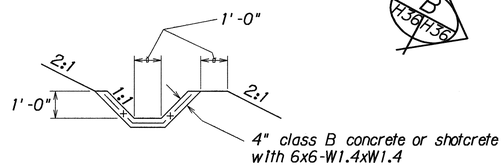

SECTION B H36 H36
Scale: 3/8" = 1'-0"

CONCRETE SPILLWAY INLET

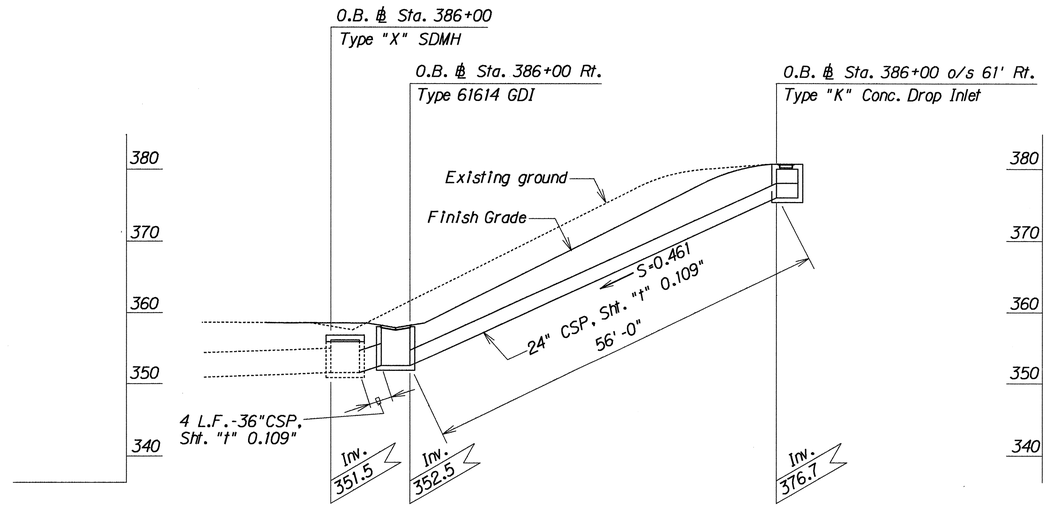

℄ PROFILE OF 24" CULVERT AT O.B. ℄ STA. 386+00 RT.

Scale: 1" = 10'

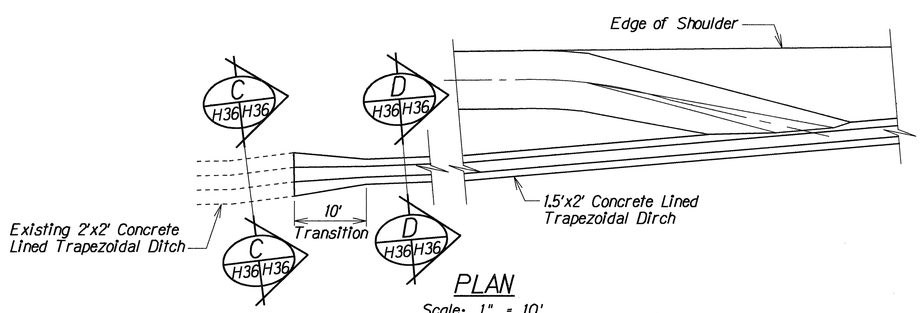

PLAN
Scale: 1" = 10'

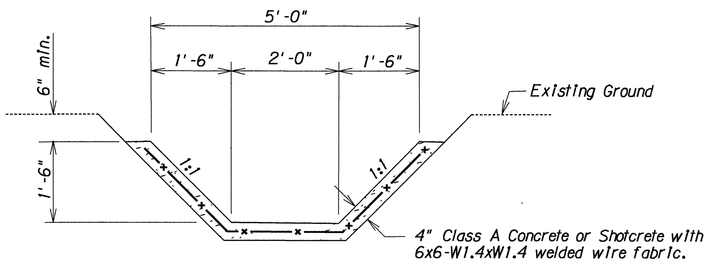

DETAIL OF 2' x 1.5' LINED TRAPEZOIDAL DRAINAGE DITCH

Scale: 3/4" = 1'-0"

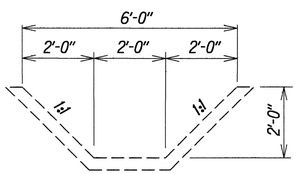

SECTION C H36 H36
Scale: 1/2" = 1'-0"

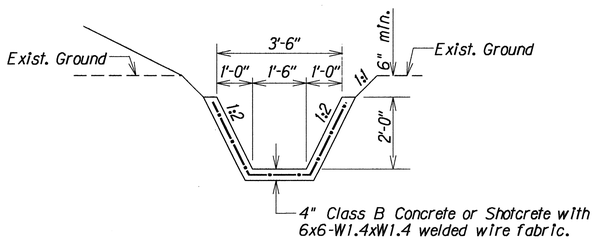

SECTION D H36 H36
Scale: 1/2" = 1'-0"

TRAPEZOIDAL DITCH BETWEEN I.B. ℄ STA. 299+10± RT. AND I.B. ℄ STA. 307+75 RT.

DATE	REVISION
06/09/93	Added Detail of 1.5'x2' Lined Trapezoidal Ditch

STATE OF HAWAII
DEPARTMENT OF TRANSPORTATION
HIGHWAYS DIVISION

DRAINAGE DETAILS

INTERSTATE RTE. H-2, HOV LANES, PH. II
Militani Interchange to Waipio Interchange
F.A.I. PROJECT NO. IR-H2-1(27)

Scale: As Noted — Date: Apr., 1992

SHEET No. H36 OF 42 SHEETS

ORIGINAL PLAN — SURVEY PLOTTED BY ____ DATE ____; PLANS PREPARED BY; TRACED BY; DESIGNED BY; QUANTITIES BY; CHECKED BY; NOTE BOOK No.

C.O. 127

1ih2h36.dgn

FED. ROAD DIST. NO.	STATE	FED. AID PROJ. NO.	FISCAL YEAR	SHEET NO.	TOTAL SHEETS
HAWAII	HAW.	IR-H2-1(27)	1992	128	223

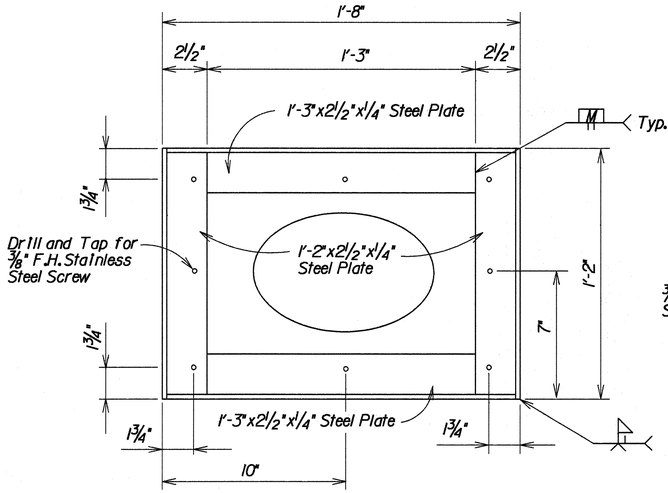

PLAN

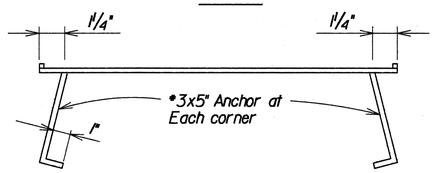

SECTION

DETAIL OF STEEL FRAME

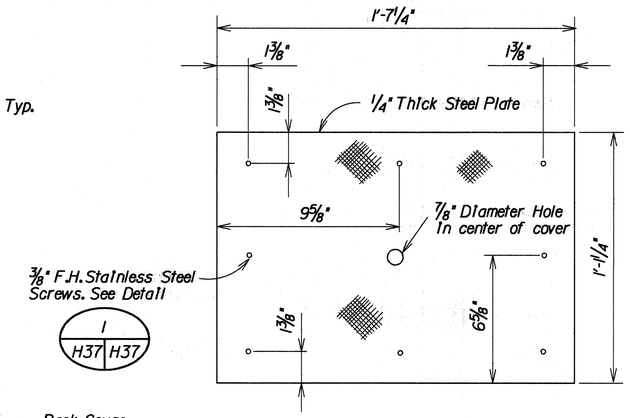

DETAIL OF STEEL COVER

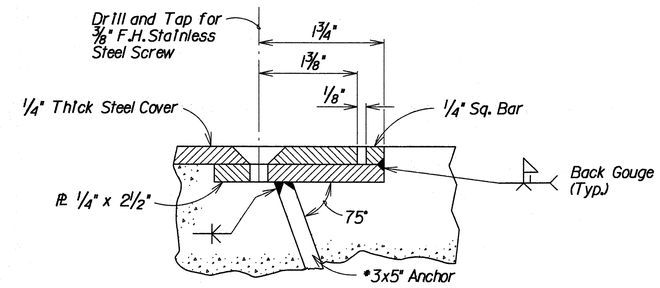

DETAIL 1 H37 H37

NOTE:
All Steel Parts Shall Be Galvanized In Accordance with the Requirements of ASTM A123.

DETAILS OF STEEL FRAME AND COVER FOR EDGEDRAIN

Scale: 3" = 1'-0"

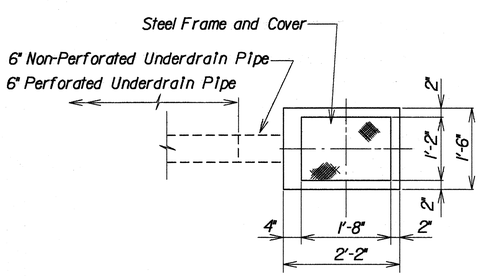

PLAN

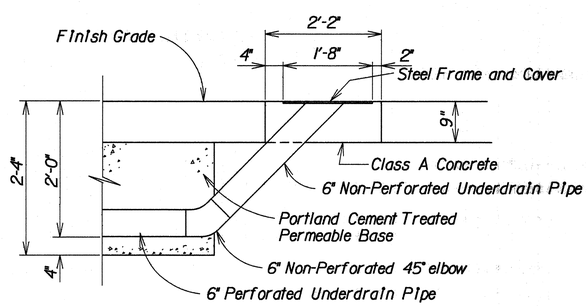

ELEVATION

DETAILS OF CLEANOUT FOR EDGEDRAIN

Scale: ¾" = 1'-0"

ORIGINAL PLAN	SURVEY PLOTTED BY	DATE
	DRAWN BY	
	TRACED BY	
NOTE BOOK	DESIGNED BY	
	QUANTITIES BY	
No.	CHECKED BY	

STATE OF HAWAII
DEPARTMENT OF TRANSPORTATION
HIGHWAYS DIVISION

DRAINAGE DETAILS

INTERSTATE RTE. H-2, HOV LANES, PH. II
Militani Interchange to Waipio Interchange
F.A.I. PROJECT NO. IR-H2-1(27)

Scale: As Noted Date: Apr., 1992

SHEET No. H37 OF 42 SHEETS

1ih2h37.dgn

FED. ROAD DIST. NO.	STATE	FED. AID PROJ. NO.	FISCAL YEAR	SHEET NO.	TOTAL SHEETS
HAWAII	HAW.	IR-H2-1(27)	1992	129	223

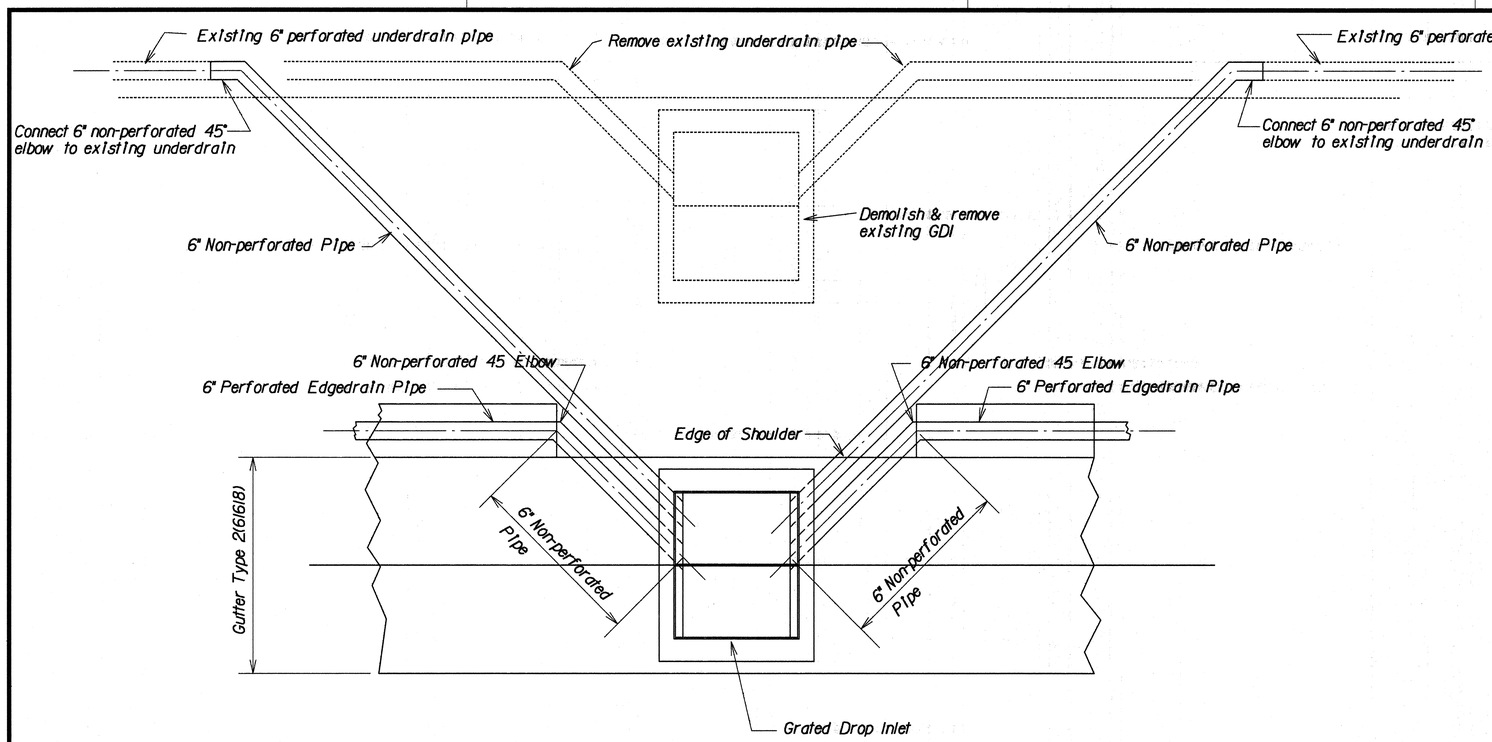

PLAN

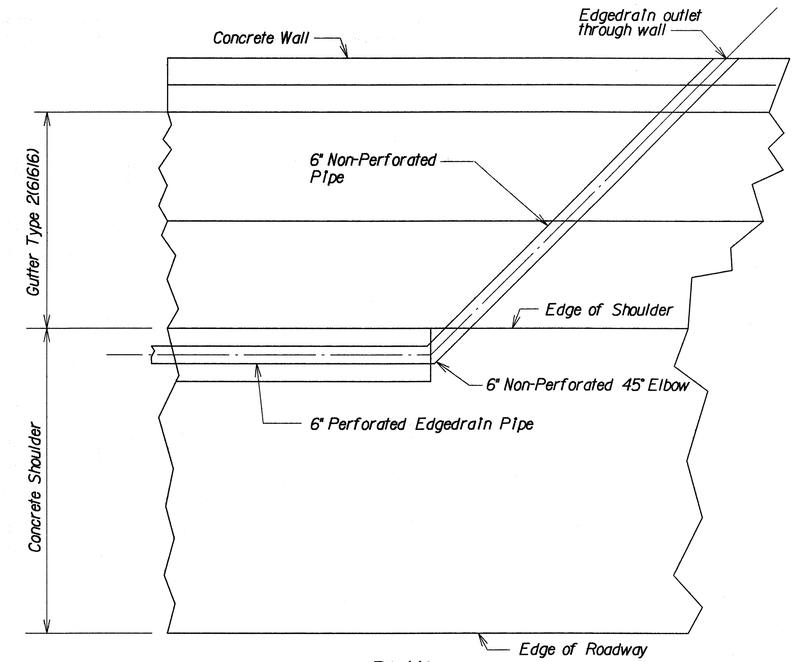

PLAN

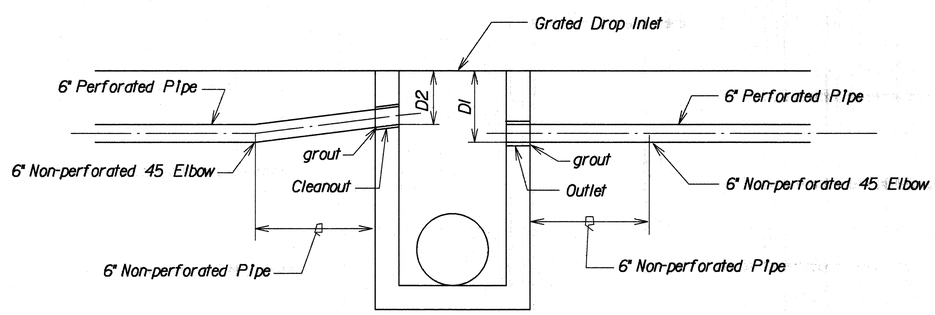

ELEVATION

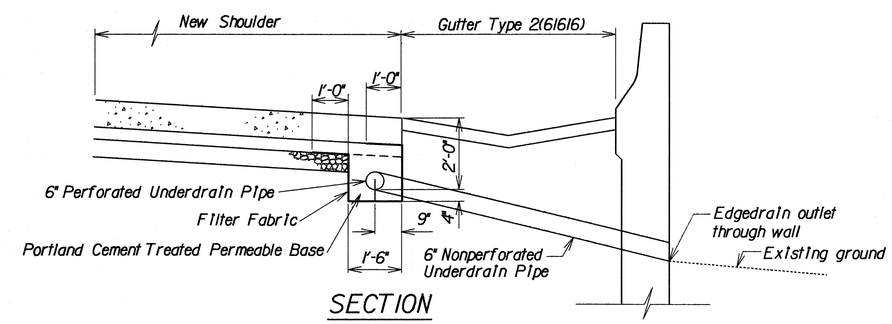

SECTION

DETAILS OF EDGEDRAIN OUTLET AT ℄ STA. 287+00 RT.

Scale: 1/2" = 1'-0"

EDGEDRAIN & UNDERDRAIN CLEANOUT & OUTLET AT GRATED DROP INLET

Scale: 1/2" = 1'-0"

ORIGINAL PLAN	SURVEY PLOTTED BY	DATE
	DRAWN BY	
	TRACED BY	
NOTE BOOK	DESIGNED BY	
	QUANTITIES BY	
No.	CHECKED BY	

STATE OF HAWAII
DEPARTMENT OF TRANSPORTATION
HIGHWAYS DIVISION

DRAINAGE DETAILS

INTERSTATE RTE. H-2, HOV LANES, PH. II
Mililani Interchange to Waipio Interchange
F.A.I. PROJECT NO. IR-H2-1(27)

Scale: 1/2" = 1'-0" Date: Apr., 1992

SHEET No. H38 OF 42 SHEETS

lih2h38.dgn

FED. ROAD DIST. NO.	STATE	FED. AID PROJ. NO.	FISCAL YEAR	SHEET NO.	TOTAL SHEETS
HAWAII	HAW.	IR-H2-1(27)	1992	130	223

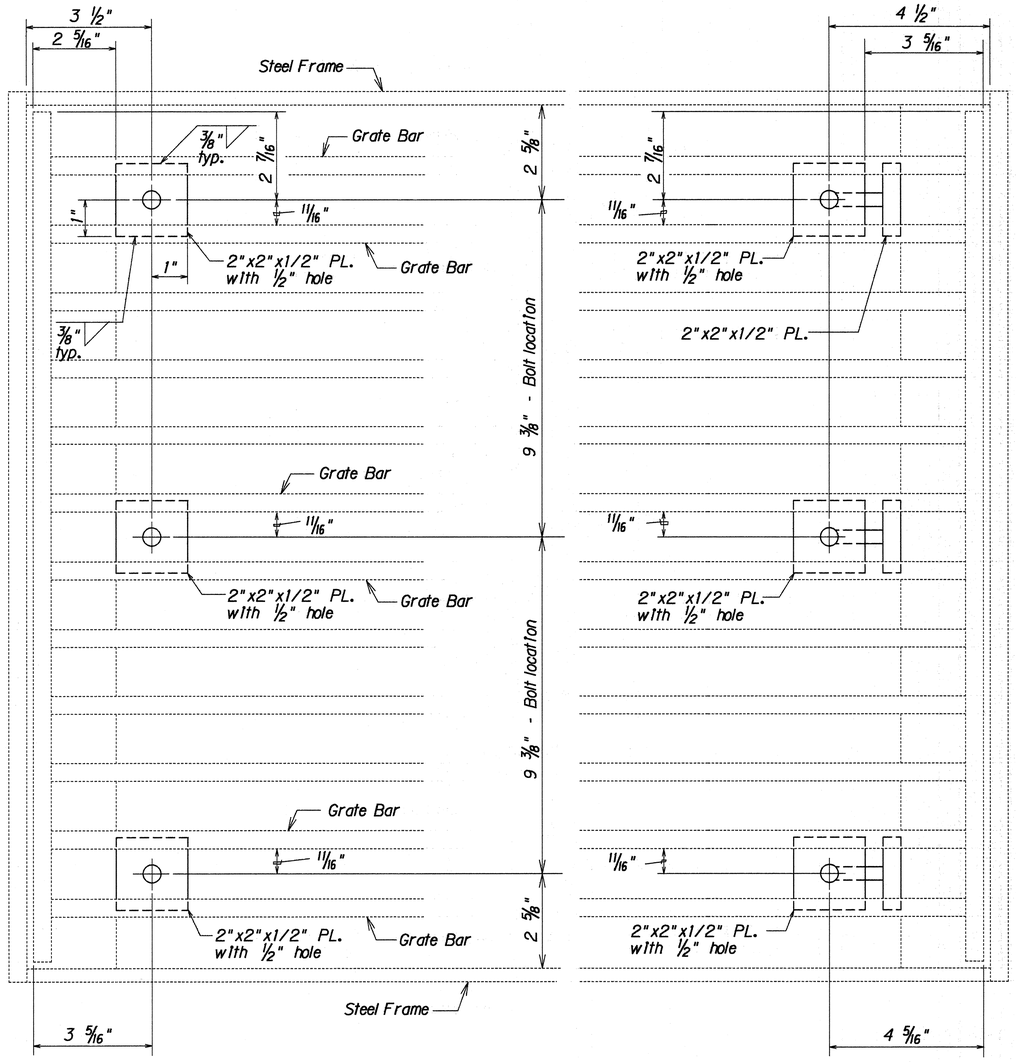

BEAM CONNECTION

ANGLE IRON CONNECTION

PLAN OF A-12 GRATE AND 2" X 2" X 1/2" PLATE

Scale: 6" = 1'-0"

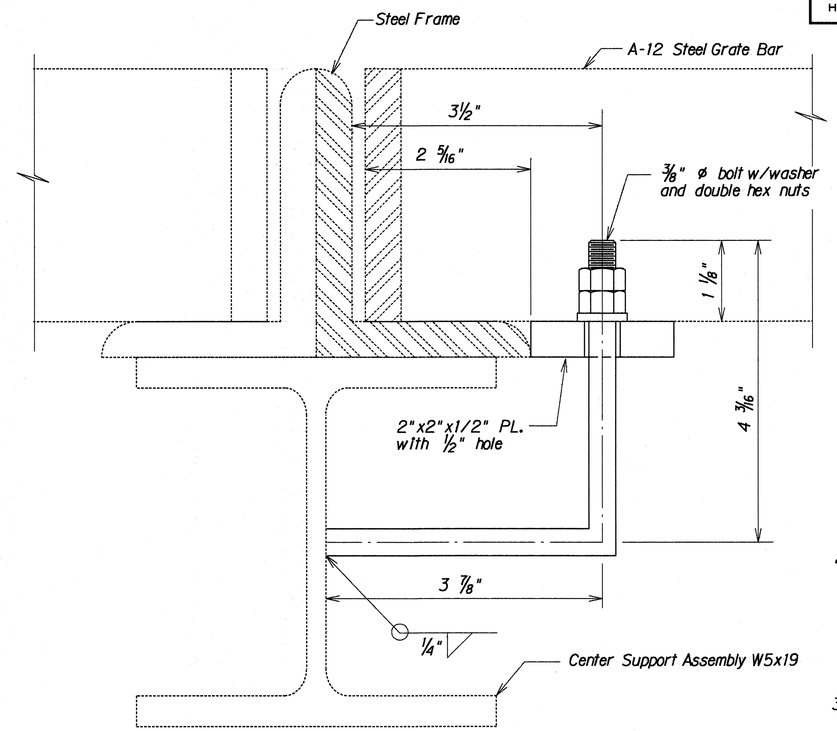

ELEVATION OF BEAM CONNECTION

Full Size

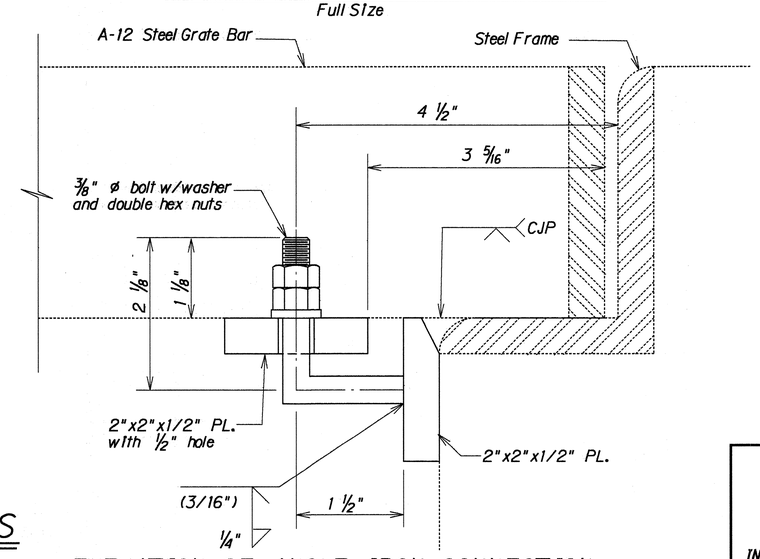

ELEVATION OF ANGLE IRON CONNECTION

Full Size

GENERAL NOTES:

1. The various materials shall conform to the specifications of ASTM as listed in the following tabulation and the Standard Specification.

Structural Steel	ASTM A 36
BOLTS, NUTS & WASHERS	ASTM A 307

2. All structural steel plates shall be hot dipped galvanized. All damage to galvanized coating shall be repaired by a field galvanizing method conforming to Annex A1 of ASTM A 780. Repair shall be by the application of a repair material conforming to the requirements of Federal Specification O-G-93, stick form.
3. Lower nut shall be used as a leveling nut to align members.

DETAILS OF MODIFICATION TO A-12 STEEL FRAME & GRATES

STATE OF HAWAII
DEPARTMENT OF TRANSPORTATION
HIGHWAYS DIVISION

DRAINAGE DETAILS

INTERSTATE RTE. H-2, HOV LANES, PH. II
Mililani Interchange to Waipio Interchange
F.A.I. PROJECT NO. IR-H2-1(27)

Scale: As Noted — Date: Apr., 1992

SHEET No. H39 OF 42 SHEETS

ORIGINAL PLAN — SURVEY PLOTTED BY — DRAWN BY — TRACED BY — DESIGNED BY — QUANTITIES BY — CHECKED BY — DATE — NOTE BOOK — No.

/usr2/lennox/11h2h39.dgn

FED. ROAD DIST. NO.	STATE	FED. AID PROJ. NO.	FISCAL YEAR	SHEET NO.	TOTAL SHEETS
HAWAII	HAW.	IR-H2-1(27)	1992	131	223

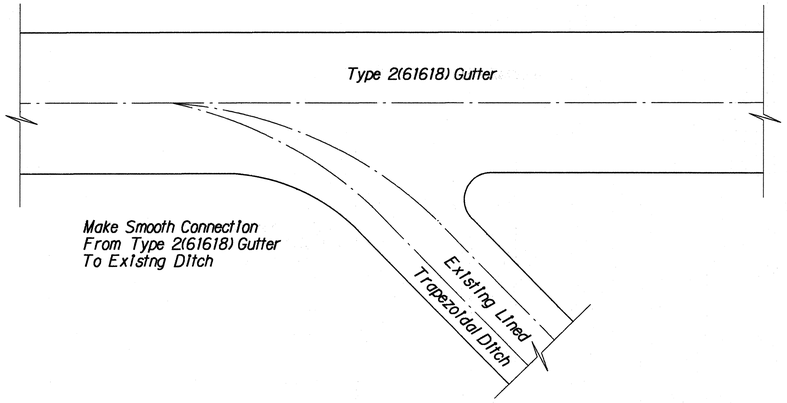

CONNECTION FROM TYPE 2(61618) GUTTER TO EXISTING DITCH AT O.B. ℄ STA. 318+30±

Scale: 1/4" = 1'-0"

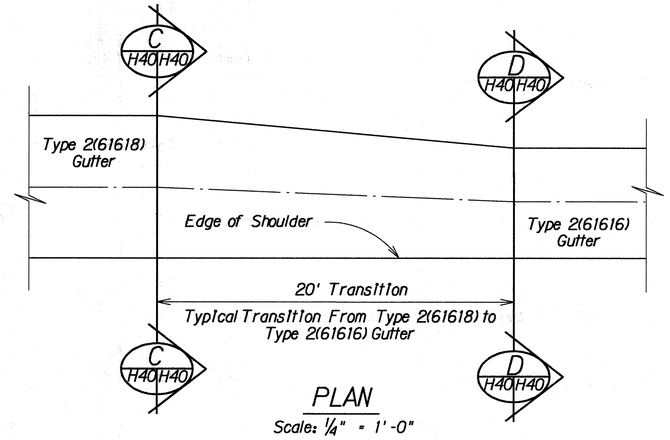

PLAN

Scale: 1/4" = 1'-0"

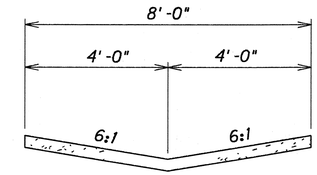

TYPE 2(61618) GUTTER

SECTION C H40 H40

Scale: 1/2" = 1'-0"

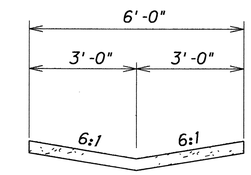

TYPE 2(61616) GUTTER

SECTION D H40 H40

Scale: 1/2" = 1'-0"

TYPICAL TRANSITION FROM TYPE 2(61618) TO TYPE 2(61616) GUTTER

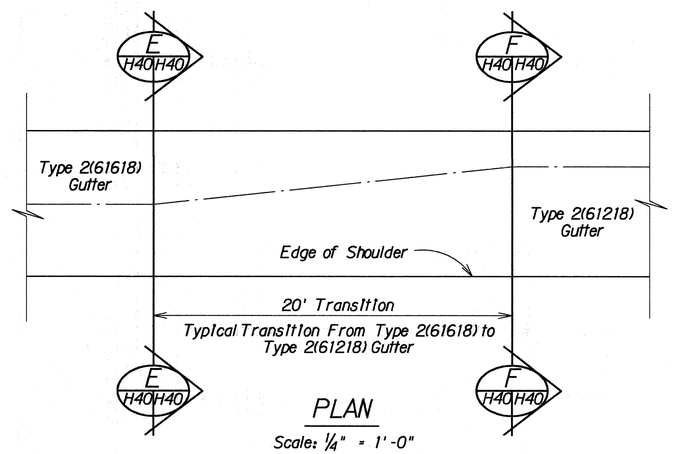

PLAN

Scale: 1/4" = 1'-0"

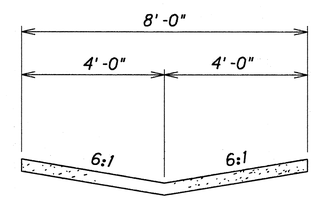

TYPE 2(61618) GUTTER

SECTION E H40 H40

Scale: 1/2" = 1'-0"

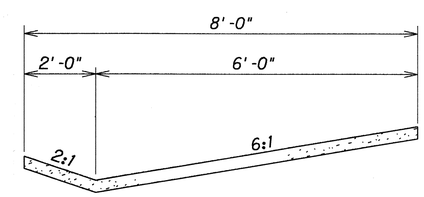

TYPE 2(61218) GUTTER

SECTION F H40 H40

Scale: 1/2" = 1'-0"

TYPICAL TRANSITION FROM TYPE 2(61618) TO TYPE 2(61218) GUTTER

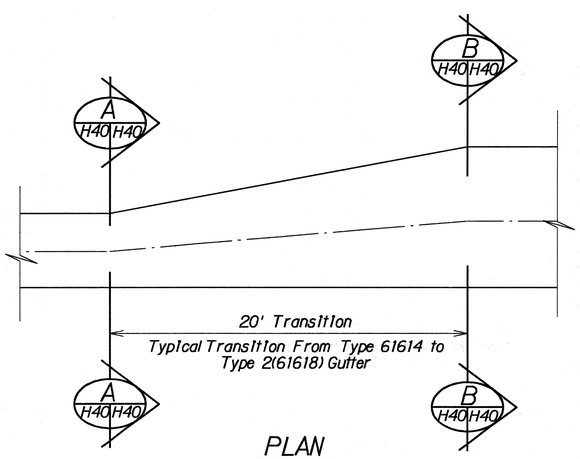

PLAN

Scale: 1/4" = 1'-0"

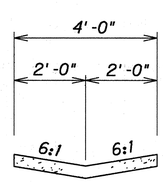

EXISTING TYPE 61614 GUTTER

SECTION A H40 H40

Scale: 1/2" = 1'-0"

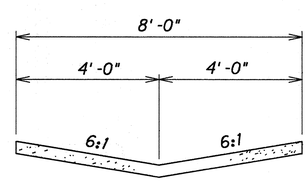

TYPE 2(61618) GUTTER

SECTION B H40 H40

Scale: 1/2" = 1'-0"

TYPICAL TRANSITION FROM TYPE 61614 TO TYPE 2(61618) GUTTER

ORIGINAL PLAN | SURVEY PLOTTED BY | DRAWN BY | TRACED BY | DESIGNED BY | QUANTITY BY | CHECKED BY | DATE | NOTE BOOK | No.

STATE OF HAWAII
DEPARTMENT OF TRANSPORTATION
HIGHWAYS DIVISION

DRAINAGE DETAILS

INTERSTATE RTE. H-2, HOV LANES, PH. II
Mililani Interchange to Waipio Interchange
F.A.I. PROJECT NO. IR-H2-1(27)

Scale: As Shown Date: Apr., 1992

SHEET No. H40 OF 42 SHEETS

/usr2/lennox/1ih2h40.dgn

FED. ROAD DIST. NO.	STATE	FED. AID PROJ. NO.	FISCAL YEAR	SHEET NO.	TOTAL SHEETS
HAWAII	HAW.	IR-H2-1(27)	1992	132	223

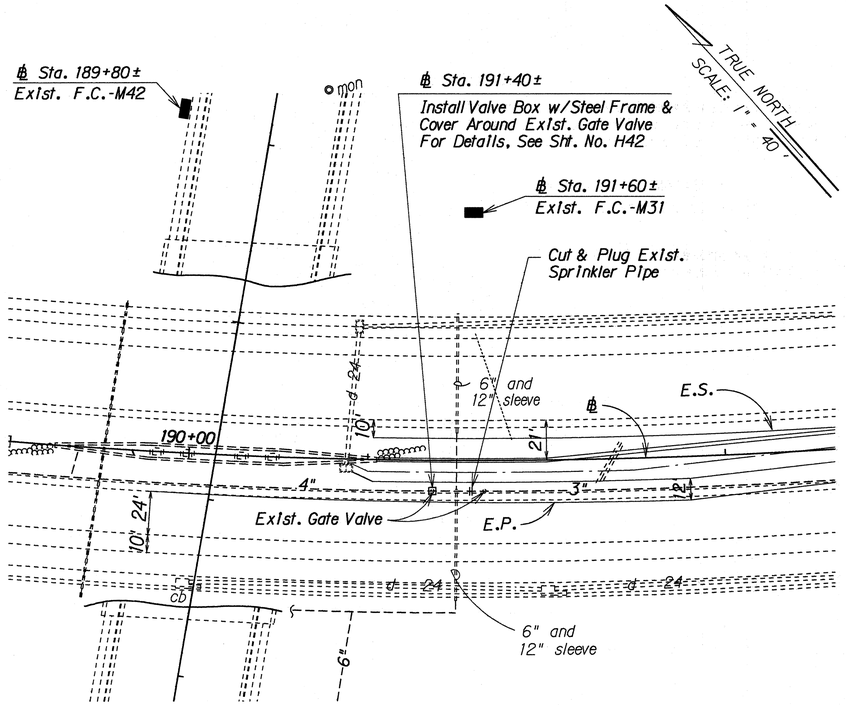

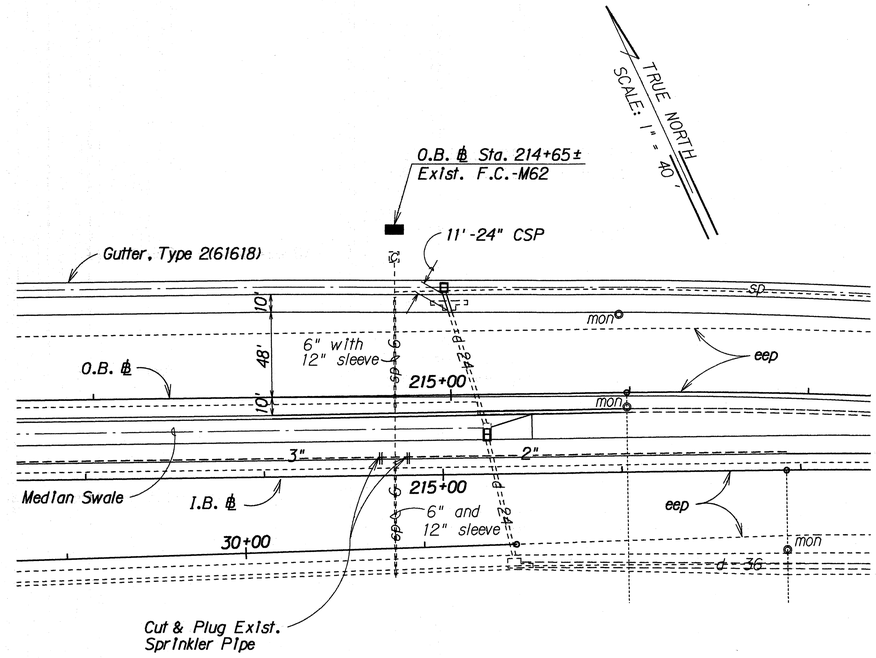

Field Controller

Electric Remote Control Valve

Disconnect the following stations from their respective field controllers:

1. F.C. - M31
   Disconnect station 10
2. F.C. - M42
   Disconnect station 9 & 10
3. F.C. - M62
   Disconnect station 1 - 10

Remote Control Valves Locations are:

Field Controller	Bank No.	Location
F.C. - M31 (Sta. 10)	M5G1	℄ Sta. 192+15 o/s 15' Rt.
F.C. - M42 (Sta. 9)	M5I1	℄ Sta. 194+33 o/s 15' Rt.
F.C. - M42 (Sta. 10)	M6B5	℄ Sta. 197+20 o/s 15' Rt.
F.C. - M62 (Sta. 1)	M6C5	I.B. ℄ Sta. 199+40 o/s 7' Lt.
F.C. - M62 (Sta. 2)	M6D5	I.B. ℄ Sta. 201+82 o/s 7' Rt.
F.C. - M62 (Sta. 3)	M6F5	I.B. ℄ Sta. 204+00 o/s 7' Lt.
F.C. - M62 (Sta. 4)	M6G5	I.B. ℄ Sta. 206+70 o/s 7' Lt.
F.C. - M62 (Sta. 5)	M6I4	I.B. ℄ Sta. 209+68 o/s 7' Lt.
F.C. - M62 (Sta. 7)	M7B4	I.B. ℄ Sta. 212+50 o/s 7' Lt.
F.C. - M62 (Sta. 6)	M7C4	I.B. ℄ Sta. 215+17 o/s 7' Lt.
F.C. - M62 (Sta. 8)	M7E4	I.B. ℄ Sta. 218+03 o/s 7' Lt.
F.C. - M62 (Sta. 9)	M7F4	I.B. ℄ Sta. 219+75 o/s 7' Lt.
F.C. - M62 (Sta. 10)	M7G4	I.B. ℄ Sta. 219+90 o/s 12' Lt.

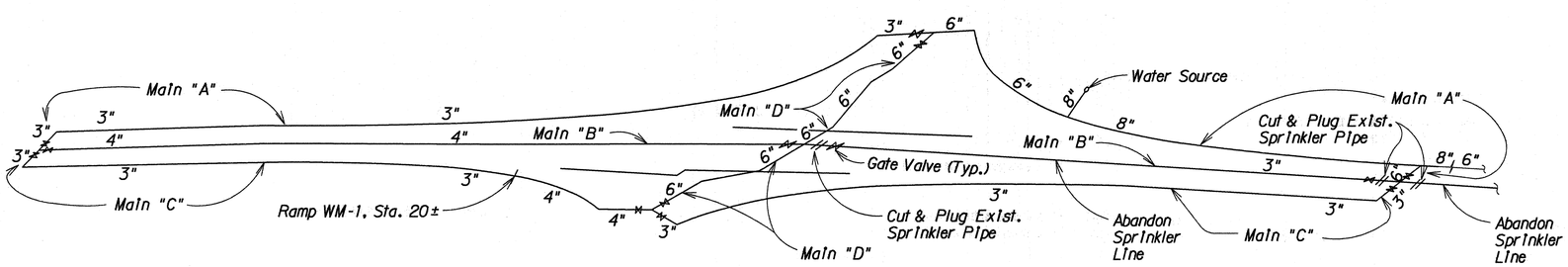

ISOMETRIC - DISTRIBUTION SYSTEM

MILILANI INTERCHANGE

Not to Scale

ORIGINAL PLAN	SURVEY PLOTTED BY	DATE
	DRAWN BY	
	TRACED BY	
NOTE BOOK	DESIGNED BY	
	QUANTITIES BY	
No.	CHECKED BY	

STATE OF HAWAII
DEPARTMENT OF TRANSPORTATION
HIGHWAYS DIVISION

DRAINAGE PLAN

INTERSTATE RTE. H-2, HOV LANES, PH. II
Mililani Interchange to Waipio Interchange
F.A.I. PROJECT NO. IR-H2-1(27)

Scale: 1" = 40' Date: Apr., 1992

SHEET No. H41 OF 42 SHEETS

/usr2/lennox/11h2h41.dgn

FED. ROAD DIST. NO.	STATE	FED. AID PROJ. NO.	FISCAL YEAR	SHEET NO.	TOTAL SHEETS
HAWAII	HAW.	IR-H2-1(27)	1992	133	230

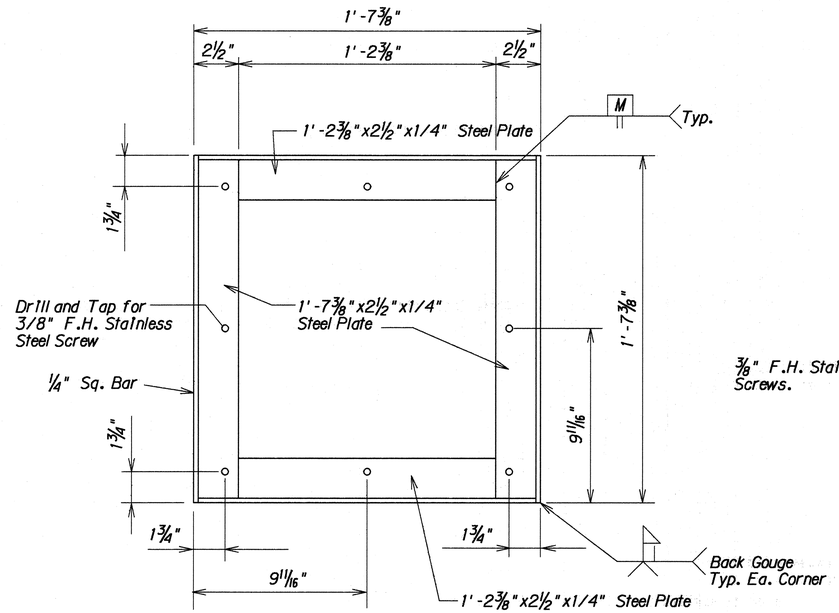

PLAN VIEW OF FRAME

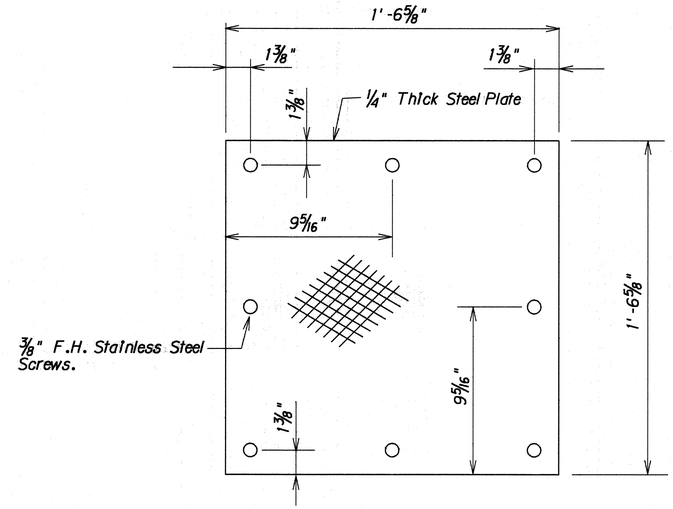

DETAIL OF STEEL COVER

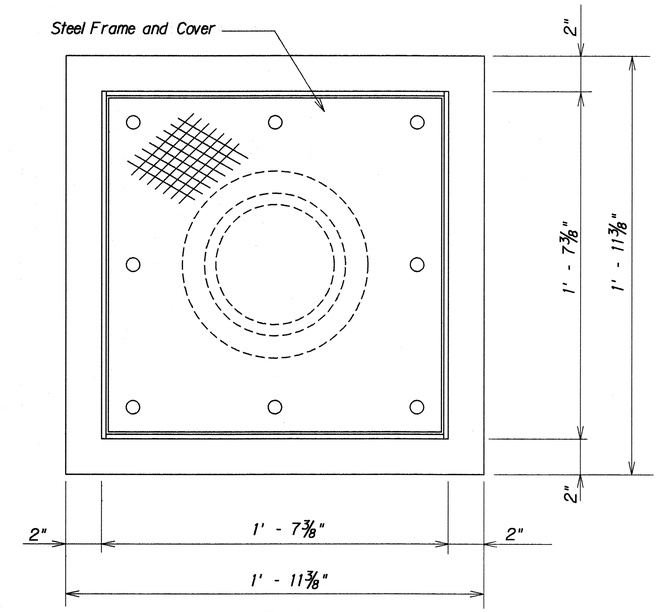

PLAN

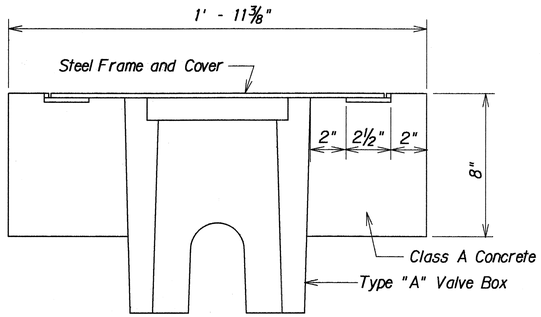

SECTION

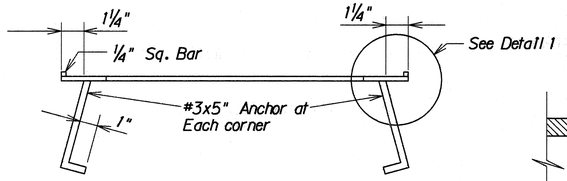

SECTION VIEW OF FRAME

DETAIL OF STEEL FRAME

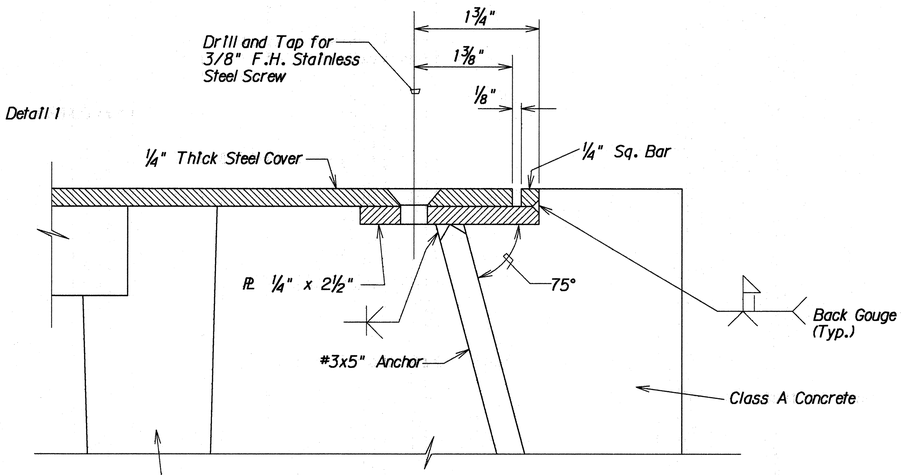

DETAIL 1
Full Size
H42 H42

NOTE:
All steel parts shall be galvanized in accordance with the requirements of ASTM A123.

STEEL FRAME AND COVER FOR TYPE "A" VALVE BOX

DETAIL OF VALVE BOX WITH STEEL FRAME & COVER AT ℄ STA. 191 + 40 ±

Scale: 3" = 1'-0"

ORIGINAL PLAN	SURVEY PLOTTED BY	DATE
	DRAWN BY	
	TRACED BY	
NOTE BOOK	DESIGNED BY	
	QUANTITIES BY	
No.	CHECKED BY	

STATE OF HAWAII
DEPARTMENT OF TRANSPORTATION
HIGHWAYS DIVISION

DRAINAGE DETAILS

INTERSTATE RTE. H-2, HOV LANES, PH. II
Mililani Interchange to Waipio Interchange
F.A.I. PROJECT NO. IR-H2-1(27)

Scale: As Noted Date: Apr., 1992

SHEET No. H42 OF 42 SHEETS

/11h2h42.dgn

FED. ROAD DIST. NO.	STATE	FED. AID PROJ. NO.	FISCAL YEAR	SHEET NO.	TOTAL SHEETS
HAWAII	HAW.	IR-H2-1(27)	1995	133S-1	223

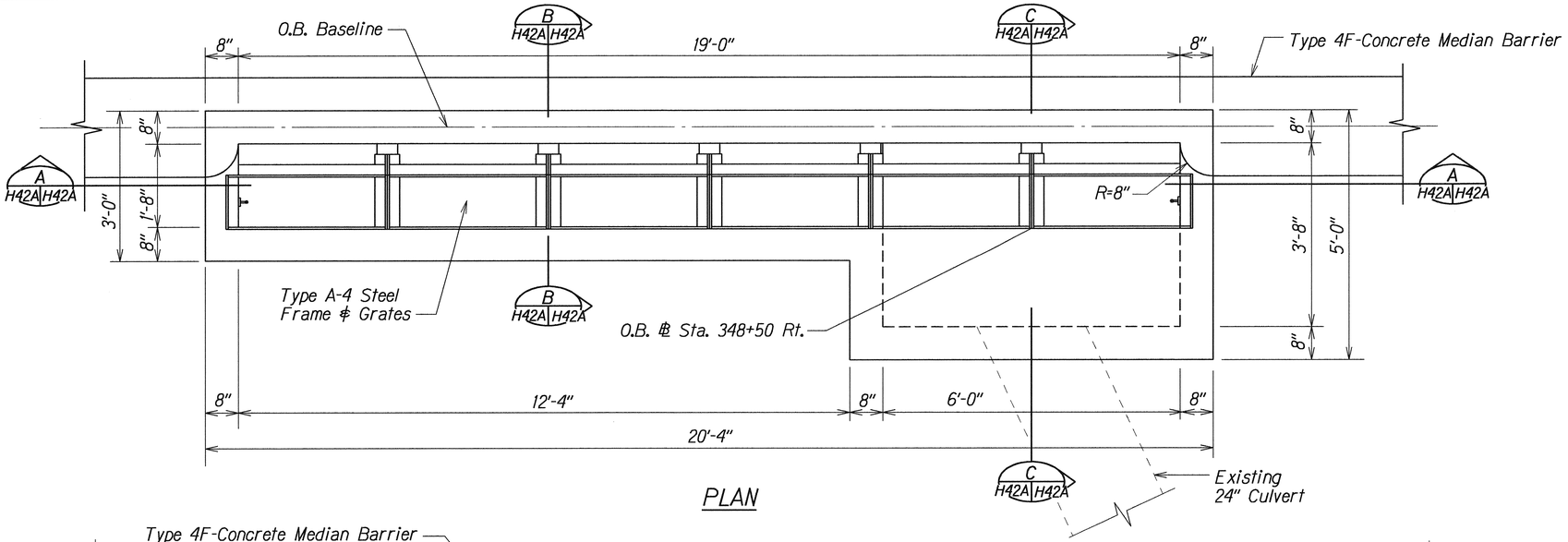

PLAN

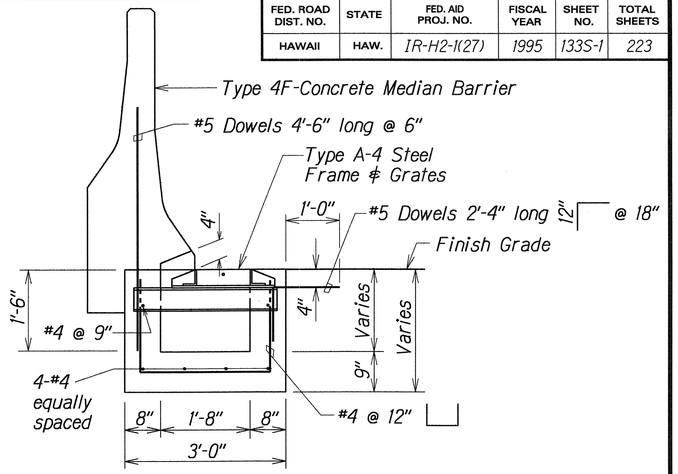

SECTION B H42A H42A

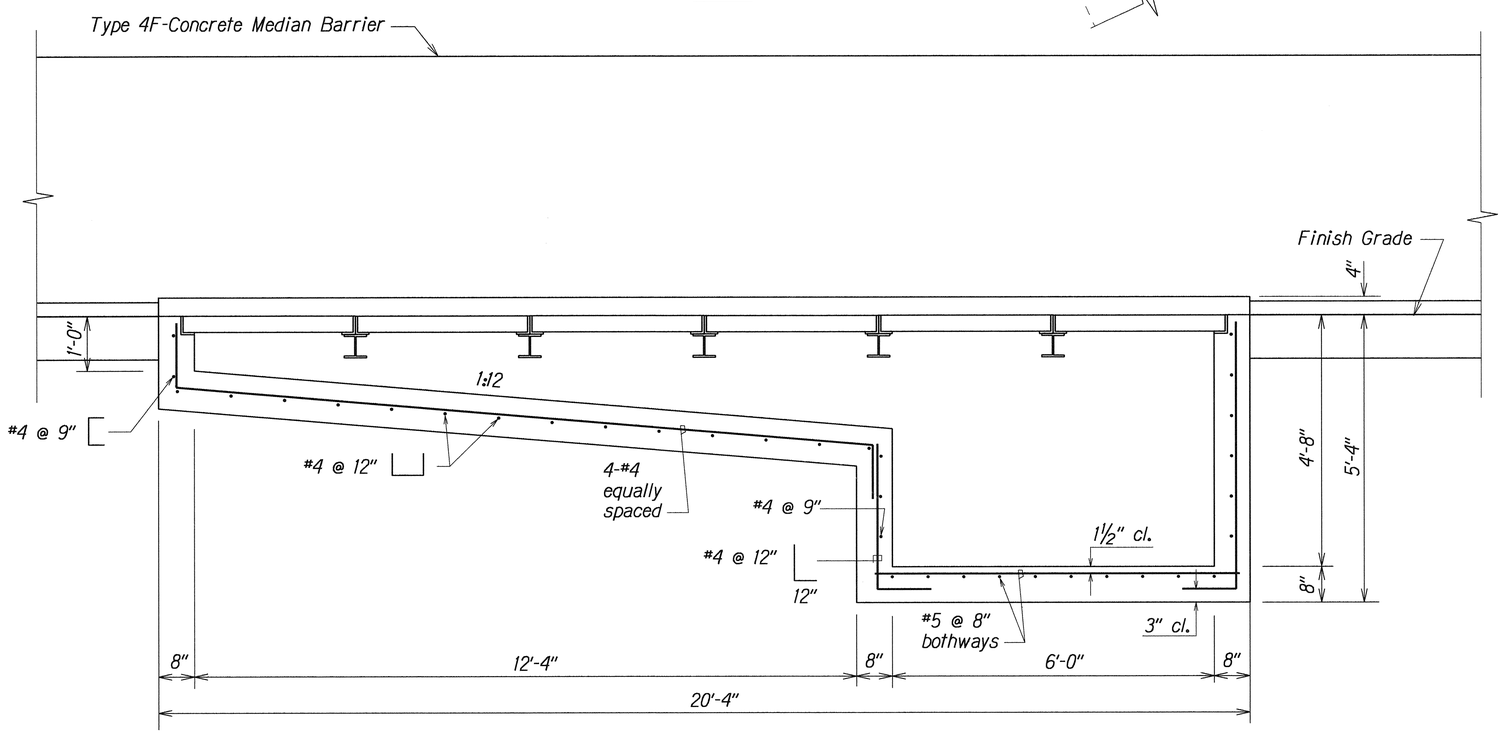

SECTION A H42A H42A

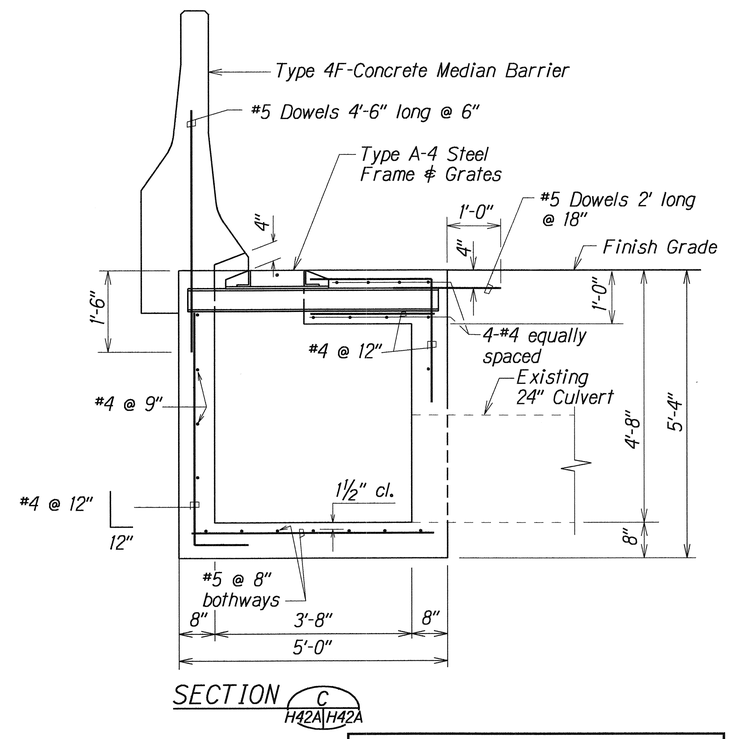

SECTION C H42A H42A

DETAILS OF TYPE 6 MEDIAN DROP INLET AT O.B. ℄ STA. 348+50 RT.

DATE	REVISION
7/22/94	Sheet added to Contract Plan to show Details of Type 6 MDI

STATE OF HAWAII
DEPARTMENT OF TRANSPORTATION
HIGHWAYS DIVISION

DRAINAGE DETAILS

INTERSTATE RTE. H-2, HOV LANES, PH II
Mililani Interchange to Waipio Interchange
F.A.I. PROJECT NO. IR-H2-1(27)

Scale: ¾" = 1'-0" Date: Jul, 1994

SHEET No. H42A OF 42 SHEETS

C.O. 133 S-1

ORIGINAL PLAN	SURVEY PLOTTED BY	DATE 7/15/94
	TRACED BY Lisbeth A. Nomura	
	DESIGNED BY Roy Sakamoto	
NOTE BOOK	QUANTITIES BY	
	CHECKED BY	

FED. ROAD DIST. NO.	STATE	FED. AID PROJ. NO.	FISCAL YEAR	SHEET NO.	TOTAL SHEETS
HAWAII	HAW.	IR-H2-1(27)	1995	133S-2	223

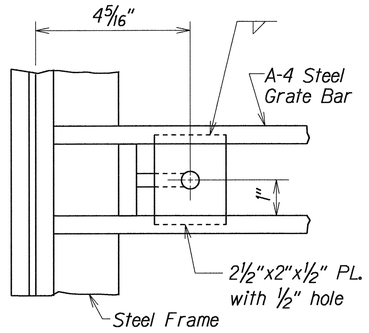

DETAIL OF PLATE FOR ANGLE IRON CONNECTION

Half Size

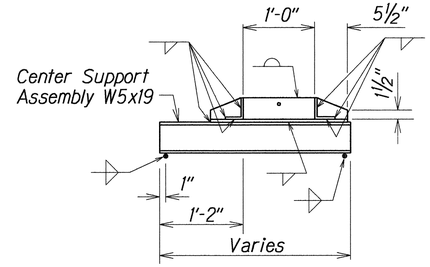

CROSS SECTION

Scale: 1"=1'-0"

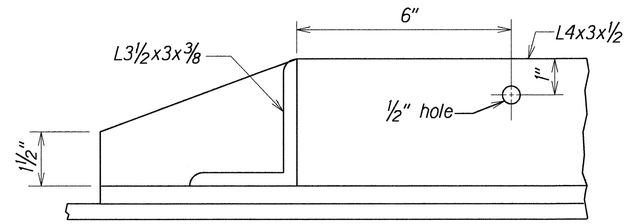

DETAIL OF HOLE LOCATION IN FRAME FOR BEAM CONNECTION

Half Size

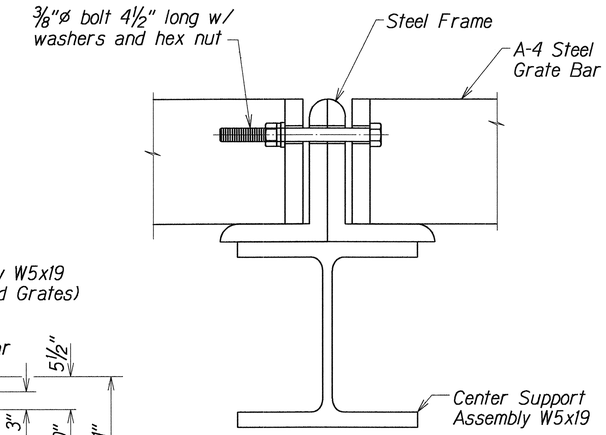

ELEVATION OF BEAM CONNECTION

Half Size

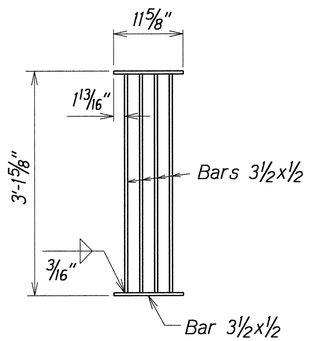

PLAN

Scale: 1"=1'-0"

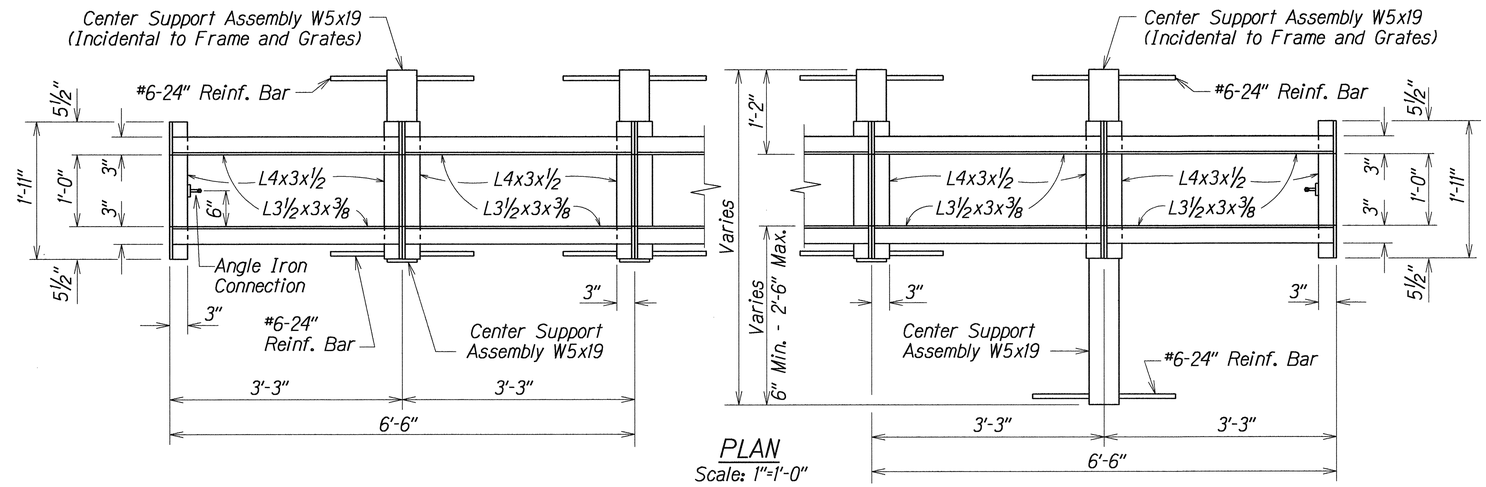

PLAN

Scale: 1"=1'-0"

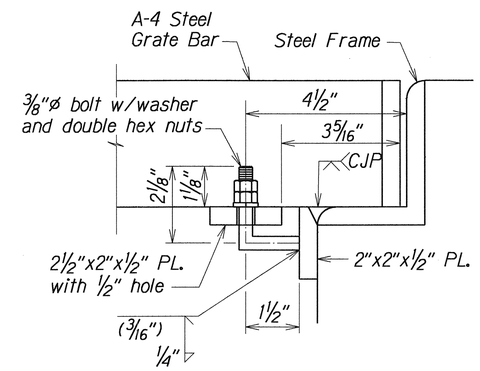

ELEVATION OF ANGLE IRON CONNECTION

Half Size

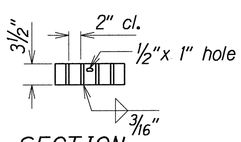

SECTION

Scale: 1"=1'-0"

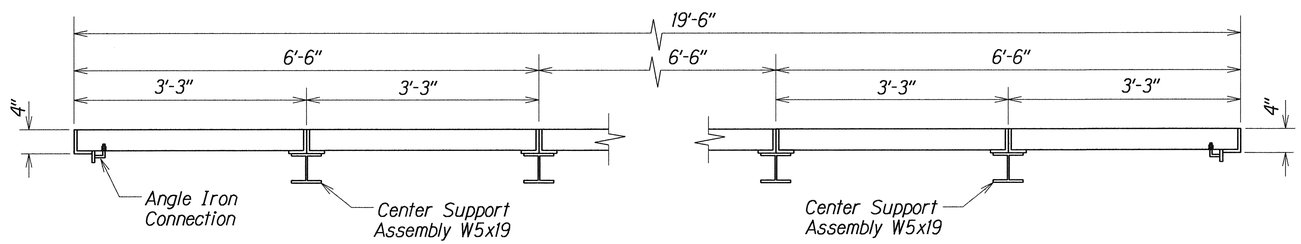

LONGITIDINAL SECTION

Scale: 1"=1'-0"

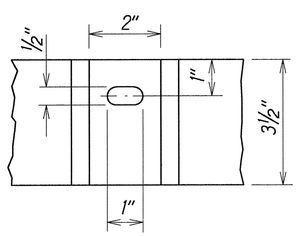

DETAIL OF HOLE LOCATION IN GRATE

Half Size

A-4 STEEL GRATE DETAILS

FRAME DETAILS

NOTES

1. The various materials shall conform to the specifications of ASTM as listed in the following tabulation and the Standard Specification.
   Structural Steel — ASTM A 36
   BOLTS, NUTS & WASHERS — ASTM A 307
2. All structural steel plates shall be hot dipped galvanized. All damage to galvanized coating shall be repaired by a field galvanizing method conforming to Annex A1 of ASTM A 780. Repair shall be by the application of a repair material conforming to the requirements of Federal Specification 0-G-93, stick form.
3. Lower nut shall be used as a leveling nut to align members.
4. All welds 3/8" unless otherwise noted.
5. Grate shall be parallel to the direction of flow.
6. Angle iron connection to be located at each end of Type A-4 Steel Frame, corresponding grates shall have welded connector plates.

TYPE A-4 STEEL FRAME AND GRATES FOR TYPE 6 MEDIAN DROP INLET AT O.B. ℄ STA. 348+50 RT.

DATE	REVISION
7/22/94	Sheet added to Contract Plan to show Details of Type 6 MDI

STATE OF HAWAII
DEPARTMENT OF TRANSPORTATION
HIGHWAYS DIVISION

DRAINAGE DETAILS

INTERSTATE RTE. H-2, HOV LANES, PH II
Mililani Interchange to Waipio Interchange
F.A.I. PROJECT NO. IR-H2-1(27)

Scale: As Shown — Date: Jul, 1994

SHEET No. H42B OF 42 SHEETS

C.O. 133 S-2

ORIGINAL PLAN — SURVEY PLOTTED BY — DRAWN BY — TRACED BY — DESIGNED BY — QUANTITIES BY — CHECKED BY — DATE 7/22/94
REVISED PLAN — NOTE BOOK — DESIGNED BY R. Sakamoto — QUANTITIES BY — CHECKED BY