FED. ROAD DIST. NO.	STATE	FED. AID PROJ. NO.	FISCAL YEAR	SHEET NO.	TOTAL SHEETS
HAWAII	HAW.	I-H2-1(13):4	1977	10	34

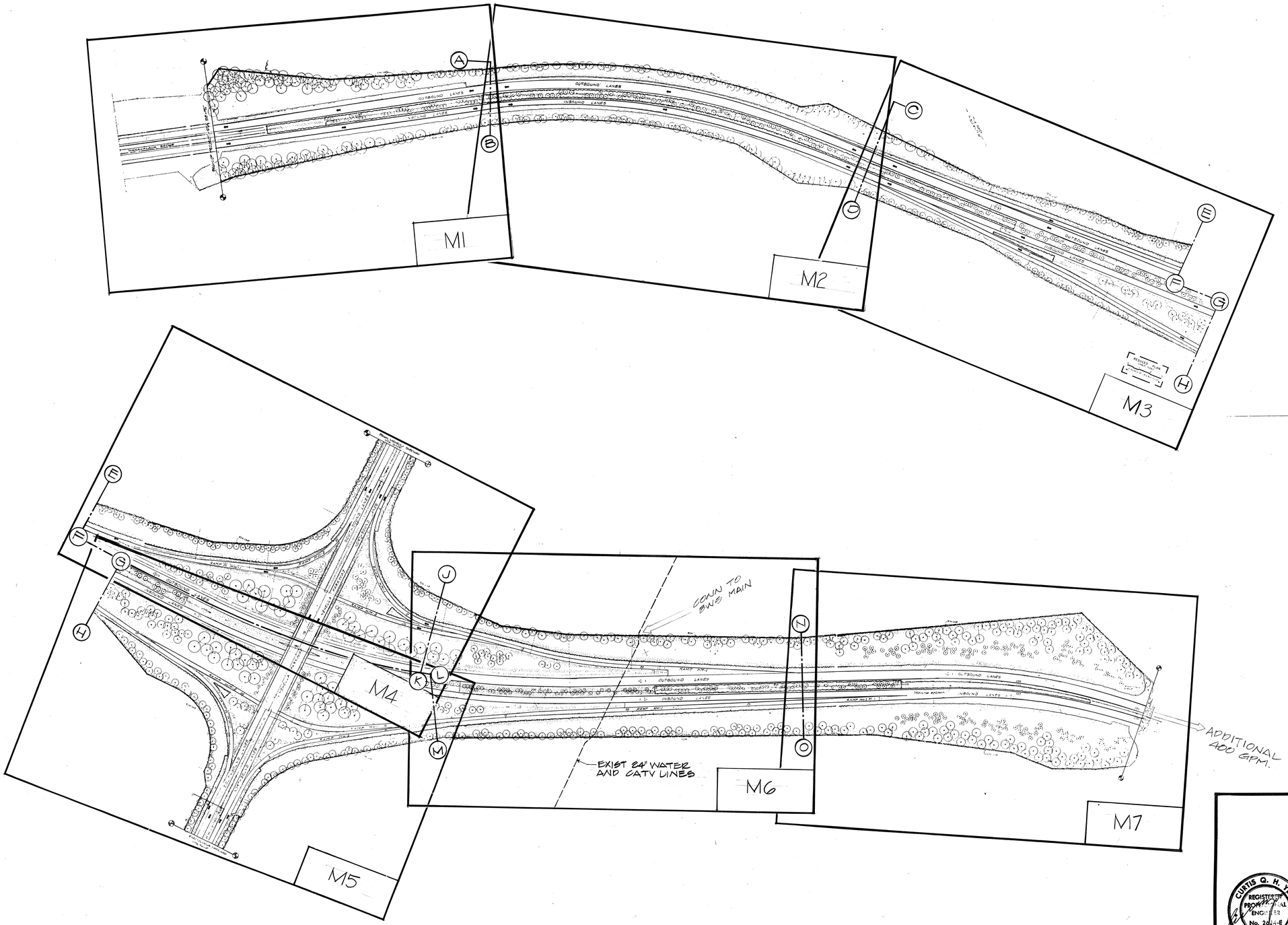

ORIGINAL PLAN		DATE
	SURVEY PLOTTED BY	
	DRAWN BY	
NOTE BOOK	TRACED BY	
	DESIGNED BY	
No.	QUANTITIES BY	
	CHECKED BY	

CURTIS Q. H. YEE
REGISTERED PROFESSIONAL ENGINEER
No. 2044-E
HAWAII, U.S.A.

This work was prepared by me or under my supervision

STATE OF HAWAII
DEPARTMENT OF TRANSPORTATION
HIGHWAYS DIVISION

PROJECT NO. I-H2-1(13):4

MILILANI INTERCHANGE

KEY SHEET

SHEET No. 10 OF 25 SHEETS

K+E CRYSTALENE® TRACING PAPER

FED. ROAD DIST. NO.	STATE	FED. AID PROJ. NO.	FISCAL YEAR	SHEET NO.	TOTAL SHEETS
HAWAII	HAW.	I-H2-1(13):4	1977	11	34

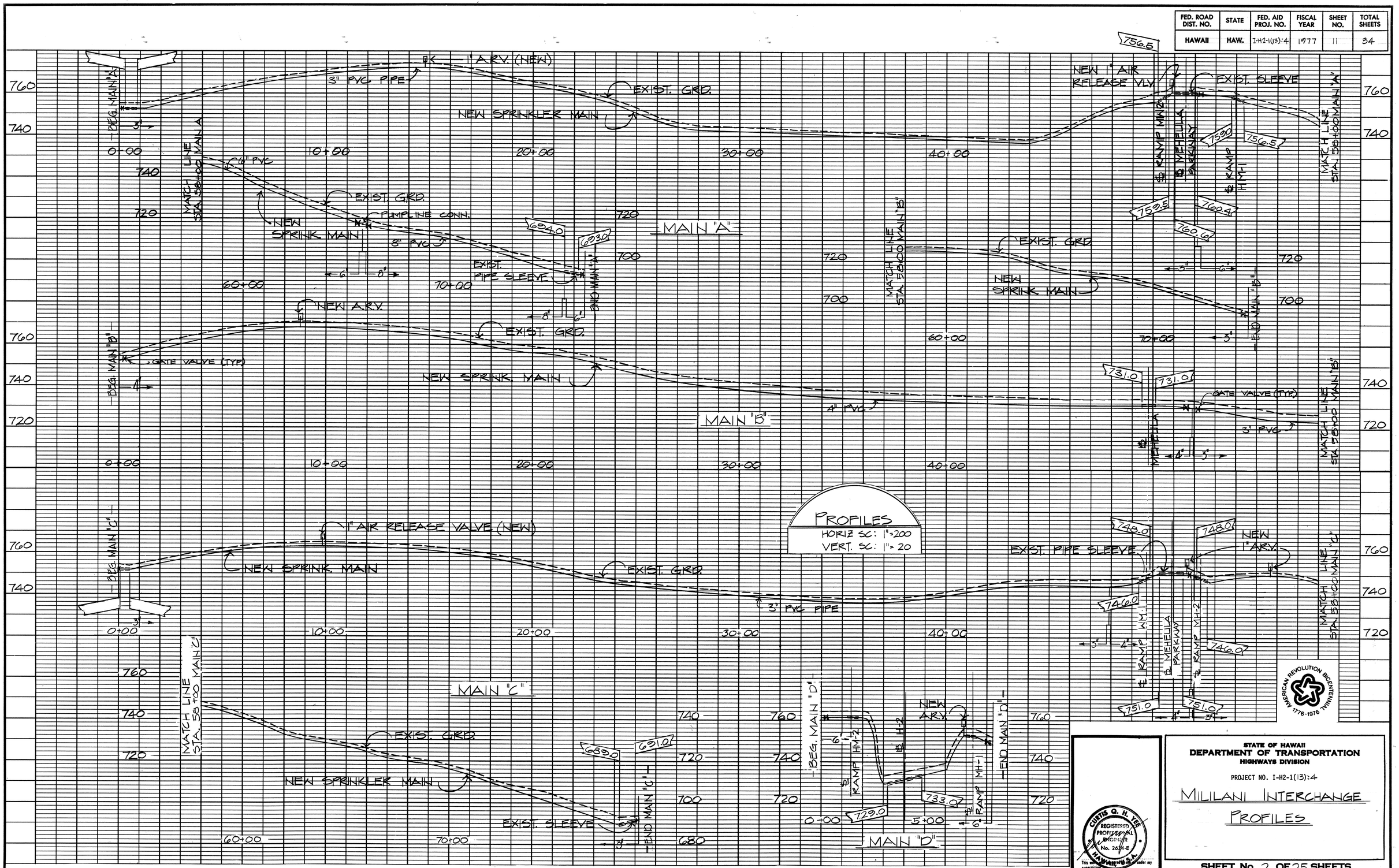

ORIGINAL PLAN	
NOTE BOOK No.	SURVEY PLOTTED BY:
	DRAWN BY:
	TRACED BY:
	DESIGNED BY:
	QUANTITIES BY:
	CHECKED BY:
	DATE:

STATE OF HAWAII
DEPARTMENT OF TRANSPORTATION
HIGHWAYS DIVISION

PROJECT NO. I-H2-1(13):4

MILILANI INTERCHANGE

PROFILES

CURTIS Q. H. YEE
REGISTERED PROFESSIONAL ENGINEER
No. 2614-E
HAWAII, U.S.A.

This work was prepared by me or under my supervision.

SHEET No. 2 OF 25 SHEETS

11

FED. ROAD DIST. NO.	STATE	FED. AID PROJ. NO.	FISCAL YEAR	SHEET NO.	TOTAL SHEETS
HAWAII	HAW.	I-H2-1(13):4	1977	12	34

GENERAL NOTES

1. EARTH SLOPES AND OTHER AREAS EXPOSED BY GRADING SHALL BE PLANTED WITH GRASS OR SUITABLE GROUND COVER AS SOON AS PRACTICAL FOLLOWING COMPLETION OF GRADING OPERATIONS IN ACCORDANCE WITH LANDSCAPING REQUIREMENTS.
2. THE CONTRACTOR SHALL BE RESPONSIBLE FOR CONFORMATION TO CHAPTER 37 & 37A OF THE PUBLIC HEALTH REGULATIONS, DEPARTMENT OF HEALTH, STATE OF HAWAII.
3. ALL EXCAVATION IN AREAS PREVIOUSLY PLANTED WITH VEGETATION SHALL BE RETURNED TO ITS ORIGINAL STATE BY THE CONTRACTOR, EITHER BY REPLANTING OR SODDING. THE CONTRACTOR SHALL REMAIN RESPONSIBLE FOR THE RESTORATION AND ANY ASSOCIATED DAMAGE, UNTIL SUCH TIME THAT THE PLANTING HAS RETURNED TO ITS ORIGINAL STATE, AS DETERMINED BY THE STATE.
4. THE CONTRACTOR SHALL BE RESPONSIBLE FOR ALL DAMAGES, INJURIES, DEATHS, ETC., RESULTING FROM ACCIDENTS TO PROPERTY, PERSONNEL, EXISTING UTILITIES, FACILITIES, AND APPURTENANCES. HE SHALL HOLD HARMLESS THE STATE OF HAWAII, THE UNITED STATES GOVERNMENT, THE ENGINEER, AND ALL THEIR EMPLOYEES FROM SUITS, DAMAGES RESULTING THEREFROM.
5. UTILITIES SHOWN ON THE PLANS ARE FOR INFORMATIONAL PURPOSES ONLY, AND NO GUARANTEES ARE MADE AS TO THE ACCURACY OF THEIR LOCATIONS. IT SHALL BE THE RESPONSIBILITY OF THE CONTRACTOR TO COORDINATE WITH THE APPROPRIATE COMPANIES OR AGENCIES OF THE GOVERNMENT TO VERIFY THE LOCATIONS OF THE UTILITIES IN THE FIELD. THE CONTRACTOR SHALL MAINTAIN COORDINATION WITH THE UTILITY COMPANIES AND/OR AGENCIES THROUGHOUT THE DURATION TO THE PROJECT TO SEE THAT NONE OF THE UTILITIES PASSING THROUGH OR ADJACENT TO THE PROJECT SITE ARE INTERFERED WITH OR DAMAGED IN ANY WAY.
6. THE CONTRACTOR SHALL VERIFY ALL LINES, GRADES, AND DIMENSIONS ON THE JOB AND TO COORDINATE ALL WORK WITH TRADES AND UTILITIES.
7. THE CONTRACTOR SHALL SECURE PERMISSION AND CLEARANCES FROM ALL GOVERNMENTAL AND/OR PRIVATE AGENCIES OR COMPANIES CONCERNED WITH THE WORK. HE SHALL SECURE AND PAY FOR ALL FEES AND PERMITS REQUIRED FOR THE CONSTRUCTION ON THIS PROJECT.
8. IT SHALL BE THE REPONSIBILITY OF THE CONTRACTOR TO AFFORD COMPLETE AND ADEQUATE PROTECTION AND SAFETY FOR HIS WORKING PERSONNEL AND THE PUBLIC AT ALL TIMES DURING THE CONSTRUCTION PERIOD.
9. THE CONTRACTOR SHALL DEWATER ALL TRENCHES AS REQUIRED FOR INSTALLATION AND TESTING OF PIPELINES AND FACILITIES.
10. THE CONTRACTOR SHALL COORDINATE ALL WORK WITH OTHER CONTRACTORS.
11. IN THE DIRECTION OF FLOW ALONG ANY LINE, DIAMETRIC PIPE SIZE SHALL REMAIN THE SAME OR SHALL DECREASE, AS SHOWN ON THE PLANS. UNLESS SPECIFICALLY CALLED FOR, IN NO CASE SHALL A PIPE OF ONE DIAMETER PRECEDE A PIPE OF A LARGER DIAMETER.
12. PRESSURE REDUCING VALVES SHALL BE SET AT PRESSURES INDICATED ON THE PLANS. ADJUSTMENTS TO THE INDICATED PRESSURES SHALL BE DONE UNDER DYNAMIC CONDITIONS, AS SHALL THE SETTING OF THE INDICATED PRESSURE BE DONE.
13. SCHEDULE 40 PVC PIPE WITH SOLVENT WELD CONNECTIONS SHALL BE USED UNLESS OTHERWISE CALLED FOR. SCHEDULE 40 PVC PIPE SHALL NOT BE THREADED. WHERE THREADED CONNECTIONS ARE REQUIRED, SCHEDULE 80 PIPE OR A THREADED ADAPTER SHALL BE USED, AT THE CONTRACTOR'S OPTION. SOLVENT WELD CONNECTIONS SHALL BE MADE ACCORDING TO MANUFACTURER'S INSTRUCTIONS.
14. ALL SPRINKLER HEADS SHALL BE INSTALLED TRUE AND PLUMB, AND SHALL NOT BE INSTALLED PERPENDICULAR TO THE FINISHED GRADE EXCEPT IN THE CASE WHERE THE GRADE IS DEAD LEVEL OR UNLESS OTHERWISE CALLED FOR IN THE PLANS.
15. ANY SPRINKLER HEAD SELECTED BY THE CONTRACTOR HAVING A VARIABLE FLOW ADJUSTMENT FEATURE SHALL BE ADJUSTED UNDER DYNAMIC CONDITIONS.
16. FOR PIPELINES CROSSING EXISTING PAVED ROADWAYS, WORK SHALL BE PERFORMED AS FOLLOWS:
    A. A.C. PAVEMENT SHALL BE NEATLY CUT.
    B. TRENCH BACKFILL MATERIAL AND A.C. PAVEMENT SHALL MATCH THE EXISTING PAVEMENT STRUCTURE.
17. ALL PIPING DESIGNS ARE BASED ON THE HAZEN-WILLIAMS FORMULA:

    $v = 1.318Cr^{0.63}s^{0.54}$ AND $h_f = 1(0.00515Q/D^{2.63}C)^{1.852}$

    HAZEN-WILLIAMS COEFFICIENT USED: FOR PVC PIPE, C = 130
18. CONTROL VALVES, GATE VALVES, VALVE ASSEMBLY UNITS, AIR RELIEF VALVES AND REMOTE CONTROL VALVES SHOWN ADJACENT TO CURBS, SHOULDERS AND PAVED AREAS SHALL BE INSTALLED 4 FEET FROM THE ABOVE MENTIONED.
19. UNLESS OTHERWISE NOTED, SPRINKLERS SHALL BE INSTALLED 5 FEET FROM CURBS, SHOULDERS, STRUCTURES, DITCHES, SLOPE PAVING AND GUARD RAILS; AND A MAXIMUM OF 3 FEET FROM FENCES. SPRINKLERS SHOWN ADJACENT TO SIDEWALKS SHALL BE INSTALLED A MAXIMUM OF 12 INCHES FROM THE SIDEWALK. SPRINKLERS SHOWN ADJACENT TO CURBS IN GORE AREAS AND IN THE MEDIAN SHALL BE INSTALLED A MAXIMUM OF 12 INCHES FROM THE CURB UNLESS OTHERWISE NOTED.
20. ALL POP-UP SPRINKLER HEADS SHALL BE INSTALLED ON FLEX SWING JOINTS. SWING JOINTS WILL BE THE SAME SIZE AS THE RISER CONNECTION.
22. USE OF WATER STREAM BREAK-UP DEVICES WILL BE PERMITTED TO ADJUST COVERAGE RADII OF SPRINKLER HEADS.
21. DEFINITION OF TERMS USED:
    A. 'CENTRAL PROGRAMMER' AND 'MASTER CONTROLLER' ARE THE SAME, AND THE TERMS USED INTERCHANGEABLY.
    B. 'FIELD CONTROLLER' AND 'SATELLITE CONTROLLER' ARE THE SAME, AND THE TERMS USED INTERCHANGEABLY.
    C. 'AUTOMATIC CONTROL VALVE' AND 'REMOTE CONTROL VALVE' ARE THE SAME, AND THE TERMS USED INTERCHANGEABLY.

STRUCTURAL NOTES

1. 4000 P.S.F. SOIL BEARING PRESSURE ASSUMED. IF CONDITIONS INDICATE OTHERWISE, OR REQUIRE MODIFICATION, THE CONTRACTOR SHALL NOTIFY THE ENGINEER IMMEDIATELY.
2. ALL CONCRETE MASONRY UNIT (CMU) WALLS SHALL BE VERTICALLY REINFORCED WITH 2-#4 BARS, 4'-0" ON CENTERS, AND THE SAME AT ALL CORNERS, ENDS, AND OPENINGS UNLESS OTHERWISE SHOWN. FILL CELLS CONTAINING REINFORCEMENT WITH CONCRETE GROUT. CONCRETE MASONRY UNIT HORIZONTAL REINFORCEMENT SHALL BE INSTALLED CONTINUOUSLY EVERY OTHER COURSE.
3. THE CONTRACTOR SHALL VERIFY SIZE AND LOCATION OF SLOTS, ANCHORS, OPENINGS, ETC., RELATING MECHANICAL, ELECTRICAL, AND ARCHITECTURAL WORK BEFORE POURING CONCRETE.
4. SLEEVES THROUGH STRUCTURAL MEMBERS SHALL NOT BE INSTALLED BY THE CONTRACTOR WITHOUT WRITTEN APPROVAL OF THE ENGINEER.
5. ALL CONCRETE USED ON THIS PROJECT SHALL BE CLASS B STRENGTH.
6. MIMIMUM REINFORCING BAR COVERAGE: 3" FOR MEMBERS CAST AGAINST AND PERMANENTLY EXPOSED TO EARTH, 3/4" ON SLABS, AND 1-1/2" ELSEWHERE UNLESS OTHERWISE INDICATED.
7. ALL FOOTINGS SHALL EXTEND 6" INTO ORIGINAL UNDISTURBED EARTH. UNDER NO CIRCUMSTANCES SHALL ANY FOOTING BE PLACED ON FILL MATERIAL.
8. ALL CONCRETE USED ON THIS PROJECT SHALL BE POURED MONOLITHICALLY.
9. ALL REINFORCEMENT SHALL BE PLACED TRUE AND PLUMB.
10. ALL REINFORCING BARS SHALL BE SECURELY TIED AND HELD IN PLACE TO PREVENT ANY MOVEMENT OR DISPLACEMENT WHILE CONCRETE IS BEING POURED.
11. ALL ON-GRADE SLABS SHALL HAVE A MINIMUM REINFORCEMENT OF 6"x6" #10x#10 WELDED WIRE MESH.
12. LAP BARS 24 DIAMETERS OR 12", WHICHEVER IS GREATER.
13. CHAMFER ALL EXPOSED CONCRETE CORNERS 3/4"x3/4".

SPRINKLER DESIGNATION	SPRINKLER TYPE	DISCHARGE	OPERATING PRESSURE	RADIUS
S_{12}	IMPACT, FULL CIRCLE	6.3 GPM	40 PSI	40 FT.
S_{13}	IMPACT, FULL CIRCLE	3.8	30	30
* S_{14}	IMPACT, FULL CIRCLE	2.4	35	20
S_{15}	SPRAY, FULL CIRCLE	4.8	30	15
S_{16}	SPRAY, FULL CIRCLE	1.5	15	10
S_{22}	IMPACT, PART CIRCLE	6.3	40	40
S_{23}	IMPACT, PART CIRCLE	3.8	30	30
* S_{24}	IMPACT, PART CIRCLE	1.3	35	20
S_{25}	SPRAY, PART CIRCLE	3.6	30	15
S_{26}	SPRAY, PART CIRCLE	1.2	15	10
P_{12}	ROTOR POP-UP, FULL CIRCLE	6.4	40	40
P_{13}	ROTOR POP-UP, FULL CIRCLE	3.9	30	30
* P_{14}	ROTOR POP-UP, FULL CIRCLE	2.4	35	20
P_{15}	SPRAY POP-UP, FULL CIRCLE	4.8	30	15
P_{16}	SPRAY POP-UP, FULL CIRCLE	1.5	15	10
P_{22}	ROTOR POP-UP, PART CIRCLE	6.4	40	40
P_{23}	ROTOR POP-UP, PART CIRCLE	3.9	30	30
* P_{24}	ROTOR POP-UP, PART CIRCLE	1.3	35	20
P_{25}	SPRAY POP-UP, PART CIRCLE	3.6	30	15
P_{26}	SPRAY POP-UP, PART CIRCLE	1.2	15	10

* HEADS MAY BE IMPACT OR SPRAY TYPES, SUBJECT TO APPROVAL.

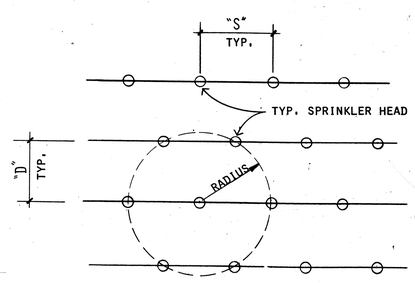

SPRINKLER RADIUS	"S"	"D"
10 FT.	10'-0"	8'-8"
15	15'-0"	13'-0"
20	20'-0"	17'-4"
30	30'-0"	26'-0"
40	40'-0"	35'-8"

TYPICAL SPRINKLER SPACING

IRRIGATION LEGEND

- FULL CIRCLE POP-UP SPRINKLER HEAD
- HALF CIRCLE POP-UP SPRINKLER HEAD
- FULL CIRCLE FIXED SPRINKLER HEAD
- HALF CIRCLE FIXED SPRINKLER HEAD
- FIELD CONTROLLER
- DRIP IRRIGATION VALVE ASSEMBLY UNIT
- GATE VALVE
- ELECTRIC REMOTE CONTROL VALVE
- HOSE BIBB
- PLASTIC PIPE SUPPLY LINE
- DRIP IRRIGATION LINE - PLASTIC
- AIR RELIEF AND VACUUM RELIEF VALVE
- PRESSURE RELIEF VALVE
- BACKFLOW PREVENTER

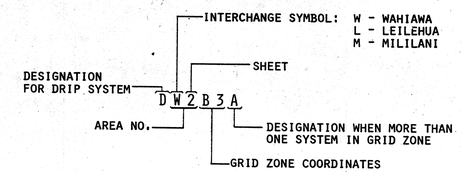

EXPLANATION OF IRRIGATION SYSTEM DESIGNATIONS

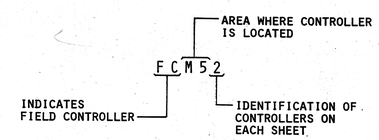

EXPLANATION OF FIELD CONTROLLER DESIGNATIONS

AMERICAN REVOLUTION BICENTENNIAL 1776-1976

DATE	REVISION
11/17/76	REVISED NOTE 21 AND SPRINKLER DESIGNATION AND PERFORMANCE TABLE PER ADDENDUM NO. 1

ORIGINAL PLAN | SURVEY PLOTTED BY | DRAWN BY | TRACED BY | DESIGNED BY | QUANTITIES BY | CHECKED BY | DATE
NOTE BOOK | No.

CURTIS Q. H. YEE REGISTERED PROFESSIONAL ENGINEER No. 2624-E HAWAII, U.S.A.
This work was prepared by me or under my supervision.

STATE OF HAWAII
DEPARTMENT OF TRANSPORTATION
HIGHWAYS DIVISION

PROJECT NO. I-H2-1(13):4

MILILANI INTERCHANGE
GENERAL NOTES

SHEET No. 3 OF 25 SHEETS

12R

FED. ROAD DIST. NO.	STATE	FED. AID PROJ. NO.	FISCAL YEAR	SHEET NO.	TOTAL SHEETS
HAWAII	HAW.	I-H2-1(13):4	1977	13	34

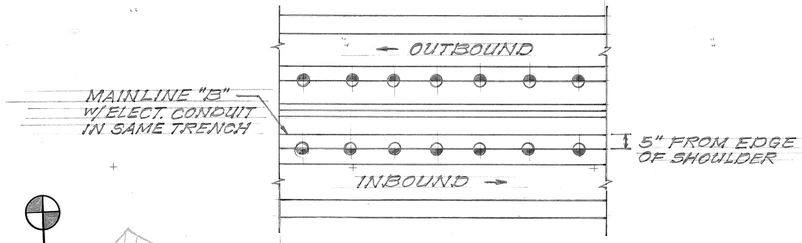

TYPICAL OF MAINLINE "B" LOCATION IN MEDIAN

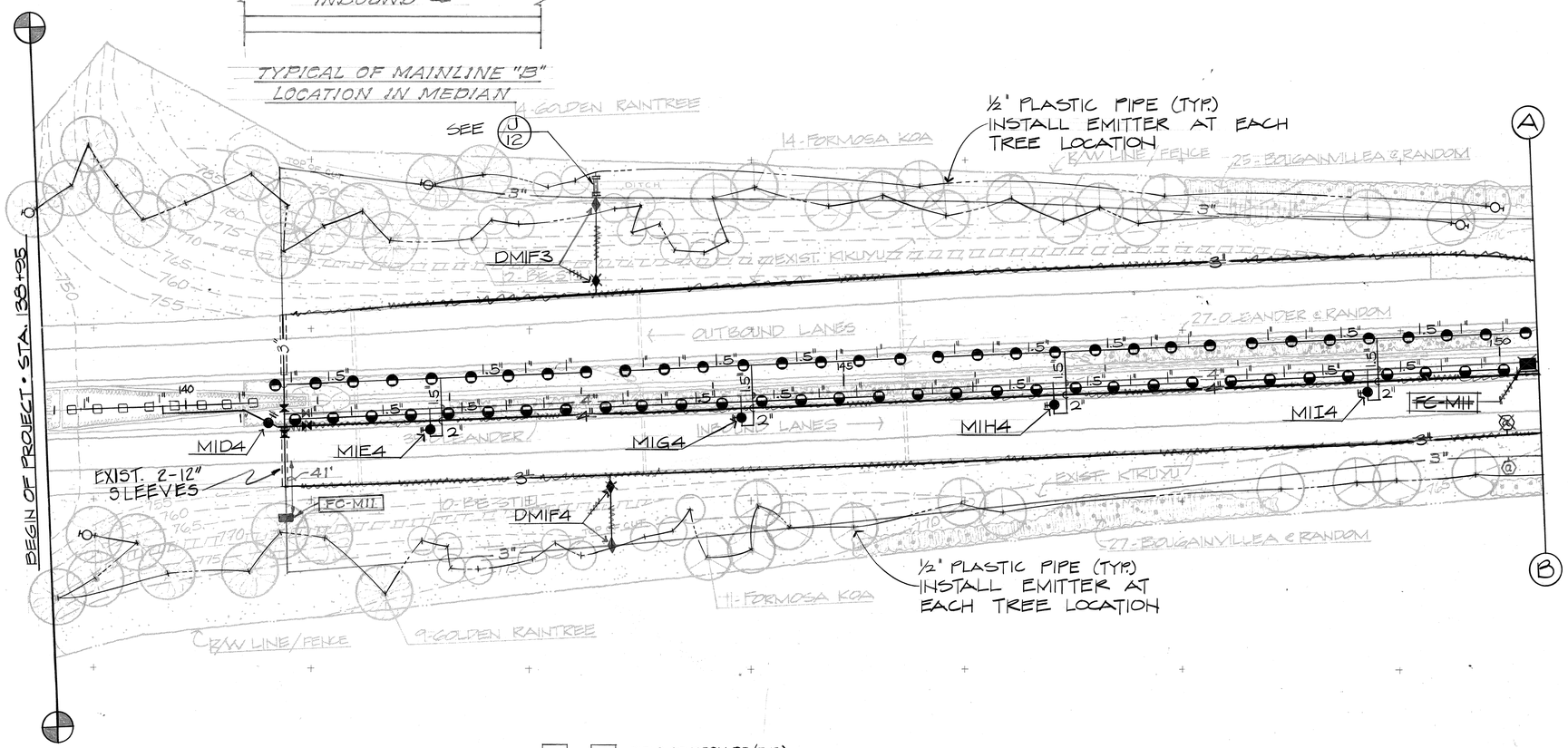

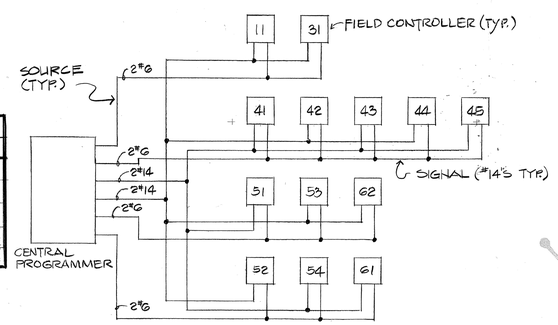

ELECTRICAL CONNECTION DIAGRAM

BANK NO.	LOCATION	HEAD (NO.-TYPE)	CONTROL VLV SIZE	CONTROL VLV PRESS.
MID4	0' O./S. STA. 139+83, BASELINE	8-514	1"	47 PSI
MIE4	15' O./S. STA. 141+94, BASELINE	17-P23	1½"	32 PSI
MIG4	15' O./S. STA. 144+30, BASELINE	16-P23	1½"	32 PSI
MIH4	15' O./S. STA. 146+70, BASELINE	16-P23	1½"	32 PSI
MII4	15' O./S. STA. 149+05, BASELINE	16-P23	1½"	32 PSI

DATE	REVISION
11/17/76	523 Sprinkler Heads in BANK Nos. MIE4, MIG4, MIH4 & MII4 replaced with P23 Sprinkler Heads per Addendum No. 1

SPIRIT OF 76

MELVYN S. MASUDA REGISTERED PROFESSIONAL ENGINEER No. 2218 HAWAII, U.S.A.

CURTIS Q. H. YEE REGISTERED PROFESSIONAL ENGINEER No. 2624-E HAWAII, U.S.A.

This work was prepared by me or under my supervision.

STATE OF HAWAII
DEPARTMENT OF TRANSPORTATION
HIGHWAYS DIVISION

PROJECT NO. I-H2-1(13):4

MILILANI INTERCHANGE
SPRINKLER PLAN
AREA "M-1"

SHEET No. 4 OF 25 SHEETS

ORIGINAL PLAN | NOTE BOOK No. | SURVEY PLOTTED BY | DRAWN BY | TRACED BY | DESIGNED BY | QUANTITIES BY | CHECKED BY | DATE

13R

FED. ROAD DIST. NO.	STATE	FED. AID PROJ. NO.	FISCAL YEAR	SHEET NO.	TOTAL SHEETS
HAWAII	HAW.	I-H2-1(13):4	1977	14	34

DATE	REVISION
11/17/76	S23 Sprinkler Heads in BANK Nos. M2B3, M2D3, M2F3, M2G4 & M2I5 replaced with P23 Sprinkler Heads per Addendum No. 1

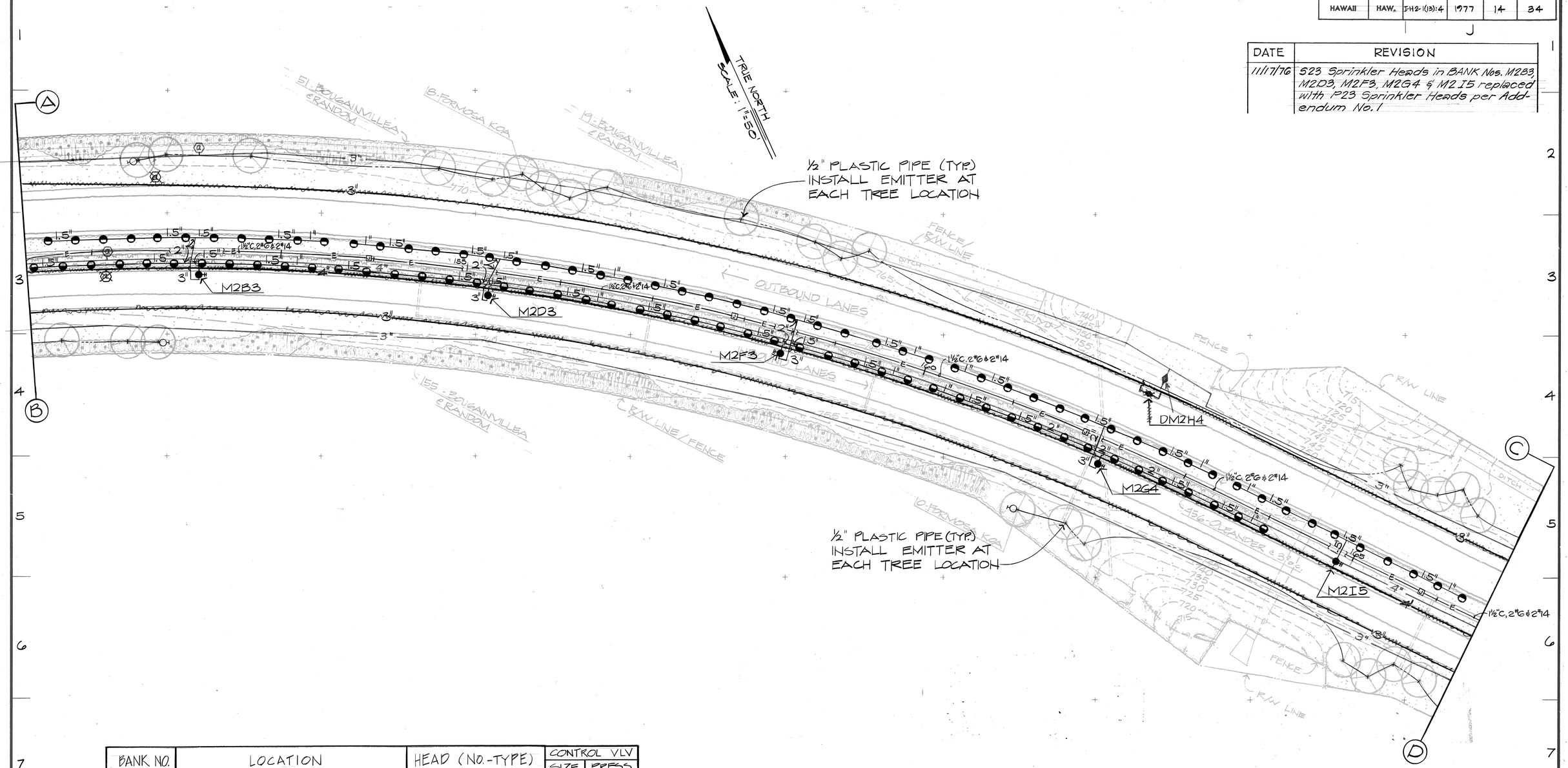

BANK NO.	LOCATION	HEAD (NO.-TYPE)	CONTROL VLV	
			SIZE	PRESS.
M2B3	15'O/S. STA. 152+05, BASELINE	22-P23	1½"	32 PSI
M2D3	15'O/S. STA. 155+20, BASELINE	22-P23	1½"	32 PSI
M2F3	15'O/S. STA. 158+55, BASELINE	22-P23	1½"	32 PSI
M2G4	15'O/S. STA. 162+05, BASELINE	25-P23	2"	32 PSI
M2I5	15'O/S. STA. 164+85, BASELINE	10-P23	1"	33 PSI

1776 1976

MELVYN S. MASUDA REGISTERED PROFESSIONAL ENGINEER No. 2218 HAWAII, U.S.A.

CURTIS Q. H. YEE REGISTERED PROFESSIONAL ENGINEER No. 2624-E HAWAII, U.S.A.

This work was prepared by me or under my supervision.

STATE OF HAWAII
DEPARTMENT OF TRANSPORTATION
HIGHWAYS DIVISION

PROJECT NO. I-H2-1(13):4

MILILANI INTERCHANGE

SPRINKLER PLAN

AREA "M-2"

SHEET No. 5 OF 25 SHEETS

DRAWN PLOTTED BY
TRACED BY
DESIGNED BY
QUANTITIES BY
CHECKED BY
DATE
ORIGINAL PLAN
NOTE BOOK No.

14R

FED. ROAD DIST. NO.	STATE	FED. AID PROJ. NO.	FISCAL YEAR	SHEET NO.	TOTAL SHEETS
HAWAII	HAW.	I-H2-1(13):4	1977	15	34

DATE	REVISION
11/17/76	S23 Sprinkler Heads in BANK Nos. M3B4, M3C4, M3E4, M3F4, M3H4 & M3I4 replaced with P23 Sprinkler Heads per Addendum No. 1

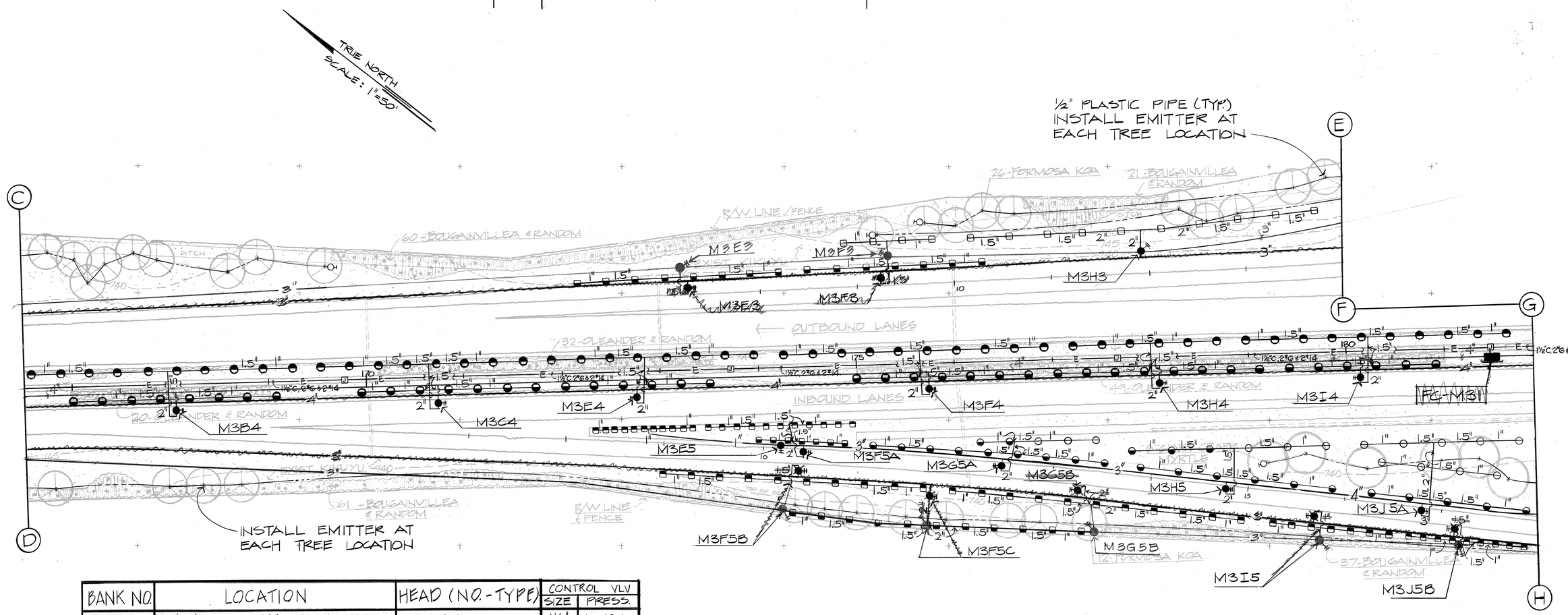

BANK NO.	LOCATION			HEAD (NO.-TYPE)	CONTROL VLV SIZE	CONTROL VLV PRESS.
M3B4	15' O/S.	STA. 167+98,	BASELINE	10-P23	1½"	32 PSI
M3C4	15' O/S.	STA. 170+65,	BASELINE	15-P23	1½"	32 PSI
M3E3	94' O/S.	STA. 173+23,	BASELINE	8-S23	1"	32 PSI
M3E4	15' O/S.	STA. 172+85,	BASELINE	14-P23	1"	32 PSI
M3E5	57' O/S.	STA. 172+88,	BASELINE	11-S26	1"	27 PSI
M3F3	19' O/S.	STA. 9+30,	RAMP MW-1	4-S13, 7-S23	1"	33 PSI
M3F4	15' O/S.	STA. 175+67,	BASELINE	17-P23	1½"	32 PSI
M3F5A	3' O/S.	STA. 10+30,	RAMP WM-1	18-S23	1½"	32 PSI
M3F5B	34' O/S.	STA. 10+30,	RAMP WM-1	10-S23	1"	33 PSI
M3F5C	73' O/S.	STA. 11+75,	RAMP WM-1	11-S23	1"	35 PSI
M3G5A	3' O/S.	STA. 12+56,	RAMP WM-1	3-P13, 11-P23	1"	34 PSI
M3G5B	34' O/S.	STA. 13+33,	RAMP WM-1	11-S23	1"	33 PSI
M3H3	45' O/S.	STA. 11+93,	RAMP MW-1	10-S12	1½"	44 PSI
M3H4	15' O/S.	STA. 178+00,	BASELINE	14-P23	1"	32 PSI
M3H5	3' O/S.	STA. 14+85	RAMP WM-1	3-P12, 9-P22	1½"	45 PSI
M3I4	15' O/S.	STA. 180+22	BASELINE	16-P23	1½"	32 PSI
M3I5	34' O/S.	STA. 15+80	RAMP WM-1	7-S24	1"	38 PSI
M3J5A	3' O/S.	STA. 16+87	RAMP WM-1	9-P12, 5-P22	1½"	45 PSI
M3J5B	30' O/S.	STA. 17+22	RAMP WM-1	9-S25	1"	32 PSI

ORIGINAL PLAN	SURVEY PLOTTED BY	DATE
	DRAWN BY	
	TRACED BY	
NOTE BOOK	DESIGNED BY	
	QUANTITIES BY	
No.	CHECKED BY	

MELVYN S. MASUDA REGISTERED PROFESSIONAL ENGINEER No. 7216 HAWAII, U.S.A.

CURTIS Q. H. YEE REGISTERED PROFESSIONAL ENGINEER No. 2624-E HAWAII, U.S.A.

This work was prepared by me or under my supervision.

STATE OF HAWAII
DEPARTMENT OF TRANSPORTATION
HIGHWAYS DIVISION

PROJECT NO. I-H2-1(13):4

MILILANI INTERCHANGE
SPRINKLER PLAN
AREA "M-3"

SHEET No. 6 OF 25 SHEETS

15R

FED. ROAD DIST. NO.	STATE	FED. AID PROJ. NO.	FISCAL YEAR	SHEET NO.	TOTAL SHEETS
HAWAII	HAW.	I-H2-1(13):4	1977	16	34

DATE	REVISION
11/17/76	Empty reference circle in grid DG filled to refer to Detail 12/20 per Addendum No. 1

BANK NO.	LOCATION	HEAD (NO.-TYPE)	CONTROL VLV SIZE	CONTROL VLV PRESS.
M4A7	45' O./S. STA. 15+19, RAMP MW-1	15-S13	1½"	33 PSI
M4A8	20' O./S. STA. 14+87, RAMP MW-1	7-P26	1"	18 PSI
M4B8	40' O./S. STA. 16+45, RAMP MW-1	14-P24	1"	40 PSI
M4C7	42' O./S. STA. 17+45, RAMP MW-1	15-S13	1½"	33 PSI
M4C8	84' O./S. STA. 183+29 BASELINE	11-P22	1½"	45 PSI
M4D6	47' O./S. STA. 19+26, RAMP MW-2	6-S13	1"	33 PSI
M4D7	84' O./S. STA. 185+90 BASELINE	8-P12, 6-P22	1½"	45 PSI
M4E6	30' O./S. STA. 21+04, RAMP MW-2	3-S12, 6-S22	1½"	43 PSI
M4E7	87' O./S. STA. 21+17, RAMP MW-1	8-P12, 4-P22	1½"	48 PSI
M4F2	61' O./S. STA. 17+56, MEHEULA	8-S23	1"	43 PSI
M4F3	64' O./S. STA. 20+00, MEHEULA	8-S23	1"	32 PSI
M4F5A	30' O./S. STA. 23+85, RAMP MW-2	6-S13, 9-S23	1½"	32 PSI
M4F5B	66' O./S. STA. 21+81, MEHEULA	8-P16, 5-P26	1"	18 PSI
M4F6A	6' O./S. STA. 22+87, RAMP MW-2	10-P26	1"	17 PSI
M4F6B	9' O./S. STA. 23+30, RAMP MW-2	2-P13, 6-P23	1"	35 PSI
M4F6C	97' O./S. STA. 23+25, RAMP MW-1	6-P12, 7-P22	1½"	45 PSI
M4F7	119' O./S. STA. 180+80 BASELINE	2-P12, 9-S22	1½"	46 PSI
M4G1	61' O./S. STA. 17+59 MEHEULA	8-S23	1"	43 PSI
M4G2	11' O./S. STA. 17+63 MEHEULA	11-P24	1"	41 PSI
M4G3A	11' O./S. STA. 19+80 MEHEULA	11-P24	1"	42 PSI
M4G3B	26' O./S. STA. 6+37, RAMP HM-1	4-S13, 11-S23	1½"	32 PSI
M4G4	6' O./S. STA. 6+68, RAMP HM-1	5-P16, 6-P26	1"	24 PSI
M4G5A	11' O./S. STA. 22+04, MEHEULA	12-P24	1"	40 PSI
M4G5B	82' O./S. STA. 21+87, MEHEULA	4-P12, 2-P22	1"	45 PSI
M4H5	11' O./S. STA. 7+75, RAMP HM-2	2-P12, 10-P22	1½"	46 PSI
M4H6	61' O./S. STA. 8+10, RAMP HM-2	5-P12, 7-P22	1½"	46 PSI
M4H7	120' O./S. STA. 191+83, BASELINE	12-S22	1½"	43 PSI
M4I5A	30' O./S. STA. 9+22, RAMP HM-1	2-S12, 13-S22	2"	43 PSI
M4I5B	11' O./S. STA. 9+73, RAMP HM-2	11-P25	1"	44 PSI
M4I6A	57' O./S. STA. 10+33, RAMP HM-2	5-P12, 5-P22	1½"	45 PSI
M4I6B	84' O./S. STA. 10+24, RAMP HM-2	11-S22	1½"	43 PSI

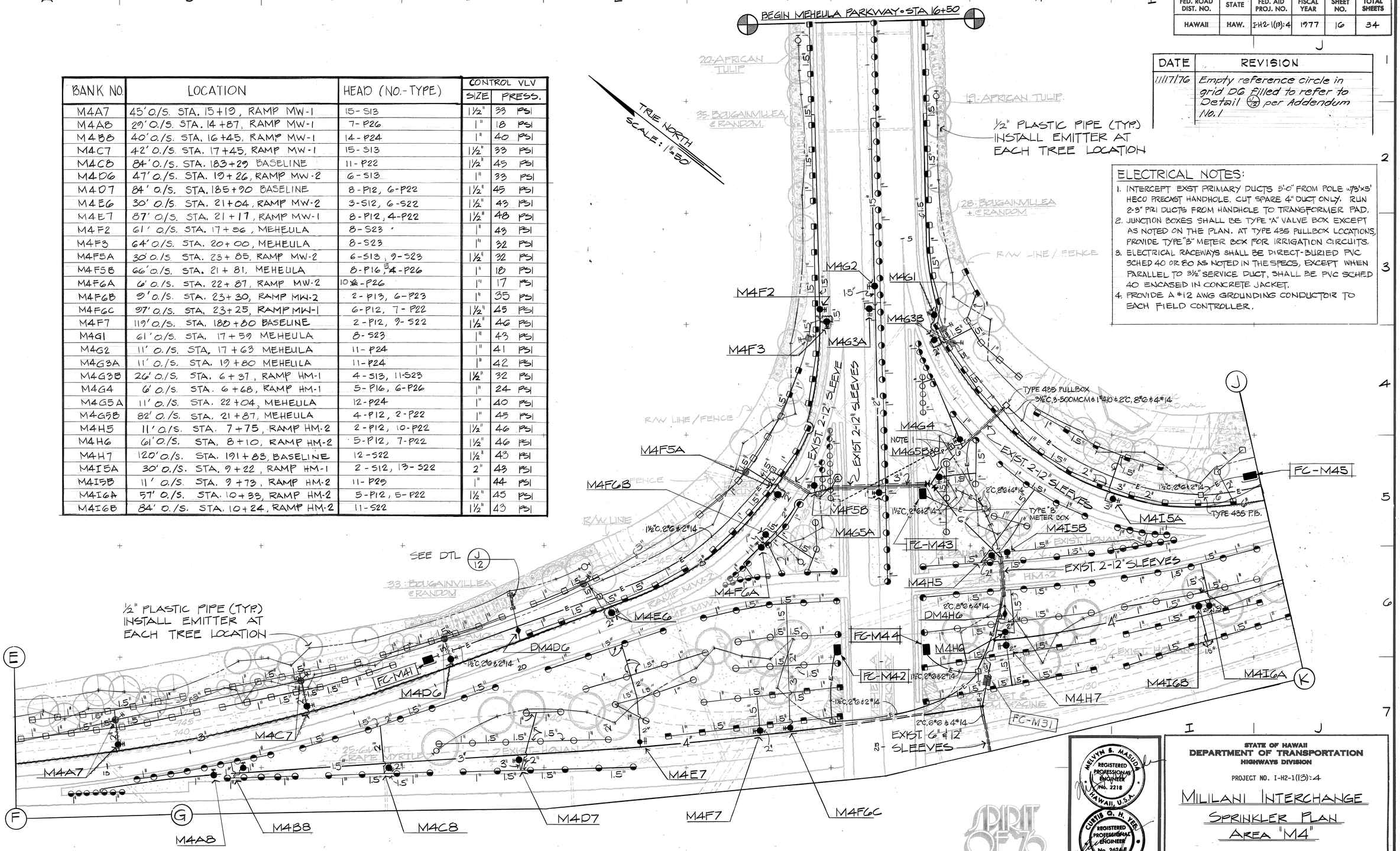

ELECTRICAL NOTES:

1. INTERCEPT EXST PRIMARY DUCTS 5'-0" FROM POLE w/3'x5' HECO PRECAST HANDHOLE. CUT SPARE 4" DUCT ONLY. RUN 2-3" PRI DUCTS FROM HANDHOLE TO TRANSFORMER PAD.
2. JUNCTION BOXES SHALL BE TYPE "A" VALVE BOX EXCEPT AS NOTED ON THE PLAN. AT TYPE 435 PULLBOX LOCATIONS, PROVIDE TYPE "B" METER BOX FOR IRRIGATION CIRCUITS.
3. ELECTRICAL RACEWAYS SHALL BE DIRECT-BURIED PVC SCHED 40 OR 80 AS NOTED IN THE SPECS, EXCEPT WHEN PARALLEL TO 3½" SERVICE DUCT, SHALL BE PVC SCHED 40 ENCASED IN CONCRETE JACKET.
4. PROVIDE A #12 AWG GROUNDING CONDUCTOR TO EACH FIELD CONTROLLER.

ORIGINAL PLAN	SURVEY PLOTTED BY	TRACED BY	DESIGNED BY	QUANTITIES BY	CHECKED BY	DATE
REVISED PLAN						
NOTE BOOK						
No.						

MELVYN S. MASUDA REGISTERED PROFESSIONAL ENGINEER No. 2218 HAWAII, U.S.A.

CURTIS G. H. YEE REGISTERED PROFESSIONAL ENGINEER No. 2624-E HAWAII, U.S.A.

This sheet was prepared under my supervision

STATE OF HAWAII
DEPARTMENT OF TRANSPORTATION
HIGHWAYS DIVISION

PROJECT NO. I-H2-1(13):4

MILILANI INTERCHANGE
SPRINKLER PLAN
AREA "M4"

SHEET No. 7 OF 25 SHEETS

SPIRIT OF 76

16R

FED. ROAD DIST. NO.	STATE	FED. AID PROJ. NO.	FISCAL YEAR	SHEET NO.	TOTAL SHEETS
HAWAII	HAW.	I-H2-1(13):4	1977	17	34

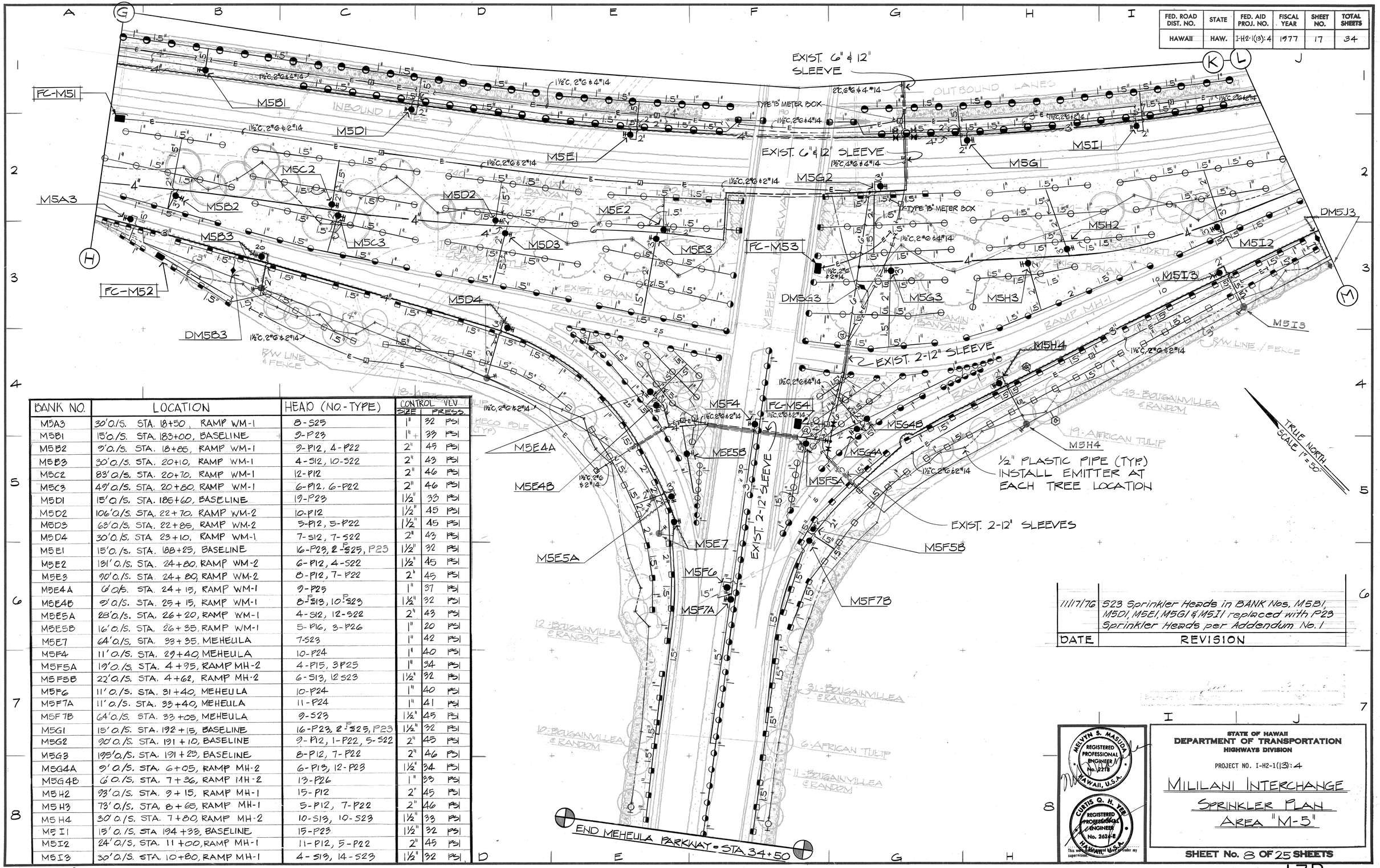

BANK NO.	LOCATION	HEAD (NO.-TYPE)	CONTROL VLV. SIZE	CONTROL VLV. PRESS.
M5A3	30' O./S. STA. 18+50, RAMP WM-1	8-S25	1"	32 PSI
M5B1	15' O./S. STA. 183+00, BASELINE	9-P23	1"	33 PSI
M5B2	9' O./S. STA. 18+85, RAMP WM-1	9-P12, 4-P22	2"	45 PSI
M5B3	30' O./S. STA. 20+10, RAMP WM-1	4-S12, 10-S22	2"	43 PSI
M5C2	83' O./S. STA. 20+70, RAMP WM-1	12-P12	2"	46 PSI
M5C3	49' O./S. STA. 20+80, RAMP WM-1	6-P12, 6-P22	2"	46 PSI
M5D1	15' O./S. STA. 185+60, BASELINE	19-P23	1½"	33 PSI
M5D2	106' O./S. STA. 22+70, RAMP WM-2	10-P12	1½"	45 PSI
M5D3	68' O./S. STA. 22+85, RAMP WM-2	5-P12, 5-P22	1½"	45 PSI
M5D4	30' O./S. STA. 23+10, RAMP WM-1	7-S12, 7-S22	2"	43 PSI
M5E1	15' O./S. STA. 188+25, BASELINE	16-P23, 2-F-S25, P23	1½"	32 PSI
M5E2	131' O./S. STA. 24+80, RAMP WM-2	6-P12, 4-S22	1½"	45 PSI
M5E3	90' O./S. STA. 24+80, RAMP WM-2	8-P12, 7-P22	2"	45 PSI
M5E4A	6' O./S. STA. 24+15, RAMP WM-1	9-P25	1"	37 PSI
M5E4B	9' O./S. STA. 25+15, RAMP WM-1	8-F-S18, 10-P-S23	1½"	32 PSI
M5E5A	28' O./S. STA. 26+20, RAMP WM-1	4-S12, 12-S22	2"	43 PSI
M5E5B	16' O./S. STA. 26+35, RAMP WM-1	5-P16, 3-P26	1"	20 PSI
M5E7	64' O./S. STA. 33+35, MEHEULA	7-S23	1"	42 PSI
M5F4	11' O./S. STA. 29+40, MEHEULA	10-P24	1"	40 PSI
M5F5A	19' O./S. STA. 4+95, RAMP MH-2	4-P15, 3-P25	1"	34 PSI
M5F5B	22' O./S. STA. 4+62, RAMP MH-2	6-S13, 12-S23	1½"	32 PSI
M5F6	11' O./S. STA. 31+40, MEHEULA	10-P24	1"	40 PSI
M5F7A	11' O./S. STA. 33+40, MEHEULA	11-P24	1"	41 PSI
M5F7B	64' O./S. STA. 33+05, MEHEULA	9-S23	1½"	45 PSI
M5G1	15' O./S. STA. 192+15, BASELINE	16-P23, 2-F-S25, P23	1½"	32 PSI
M5G2	90' O./S. STA. 191+10, BASELINE	9-P12, 1-P22, 5-S22	2"	43 PSI
M5G3	195' O./S. STA. 191+25, BASELINE	8-P12, 7-P22	2"	46 PSI
M5G4A	9' O./S. STA. 6+05, RAMP MH-2	6-P13, 12-P23	1½"	34 PSI
M5G4B	6' O./S. STA. 7+36, RAMP MH-2	13-P26	1"	33 PSI
M5H2	93' O./S. STA. 9+15, RAMP MH-1	15-P12	2"	45 PSI
M5H3	73' O./S. STA. 8+65, RAMP MH-1	5-P12, 7-P22	2"	46 PSI
M5H4	30' O./S. STA. 7+80, RAMP MH-2	10-S13, 10-S23	1½"	33 PSI
M5I1	15' O./S. STA. 194+33, BASELINE	15-P23	1½"	32 PSI
M5I2	24' O./S. STA. 11+00, RAMP MH-1	11-P12, 5-P22	2"	45 PSI
M5I3	30' O./S. STA. 10+80, RAMP MH-1	4-S13, 14-S23	1½"	32 PSI

DATE	REVISION
11/17/76	S23 Sprinkler Heads in BANK Nos. M5B1, M5D1, M5E1, M5G1 & M5I1 replaced with P23 Sprinkler Heads per Addendum No. 1

SURVEY PLOTTED BY
DRAWN BY
TRACED BY
DESIGNED BY
QUANTITIES BY
CHECKED BY
DATE
ORIGINAL PLAN
NOTE BOOK
NO.

MELVYN S. MASUDA
REGISTERED PROFESSIONAL ENGINEER
No. 2278
HAWAII, U.S.A.

CURTIS Q. H. YEE
REGISTERED PROFESSIONAL ENGINEER
No. 2624-E
HAWAII, U.S.A.

This work was prepared by me or under my supervision.

STATE OF HAWAII
DEPARTMENT OF TRANSPORTATION
HIGHWAYS DIVISION

PROJECT NO. I-H2-1(13):4

MILILANI INTERCHANGE
SPRINKLER PLAN
AREA "M-5"

SHEET No. 8 OF 25 SHEETS

17R

FED. ROAD DIST. NO.	STATE	FED. AID PROJ. NO.	FISCAL YEAR	SHEET NO.	TOTAL SHEETS
HAWAII	HAW.	I-H2-1(13):4	1977	18	34

BANK NO.	LOCATION		HEAD (NO.-TYPE)	CONTROL VLV SIZE	CONTROL VLV PRESS
M6A4	81' O/S. STA. 196+60,	BASELINE	5-P12, 6-P22	1½"	45 PSI
M6B3	34' O/S. STA. 13+42,	RAMP HM-1	4-S12, 8-S22	1½"	43 PSI
M6B4	158' O/S. STA. 196+60,	BASELINE	6-P12, 6-P22	1½"	45 PSI
M6B5	15' O/S. STA. 197+20,	BASELINE	15-P23	1½"	32 PSI
M6B6	24' O/S. STA. 13+58,	RAMP MH-1	5-P13, 13-P23	1½"	34 PSI
M6B7	42' O/S. STA. 13+20,	RAMP MH-1	8-S13	1"	33 PSI
M6C4	103' O/S. STA. 198+70,	INBOUND	5-P12, 9-P22	2"	45 PSI
M6C5	7' O/S. STA. 199+40,	IN BOUND	14-P23	1"	32 PSI
M6C6	55' O/S. STA. 15+65,	RAMP MH-1	7-S12, 6-S22	2"	43 PSI
M6D3	60' O/S. STA. 16+80,	RAMP HM-1	11-S13, 9-S23	1½"	34 PSI
M6D4	103' O/S. STA. 200+80,	INBOUND	11-P22	1½"	45 PSI
M6D5	7' O/S. STA. 201+82,	INBOUND	15-P23	1½"	32 PSI
M6D6	21' O/S. STA. 16+32,	RAMP MH-1	24-P25	1½"	32 PSI
M6E4	103' O.S. STA. 202+75,	INBOUND	12-P24	1"	35 PSI

DATE	REVISION
11/17/76	523 Sprinkler Heads in BANK Nos. M6B5, M6C5, M6D5, M6F5, M6G5 & M6I4 replaced with P23 Sprinkler Heads per Addendum No. 1. Reference (4/12) in grid F3 revised to read (11/12). Meter and connection in grid F3 revised to read "New 4" WATER METER AND CONNECTION.

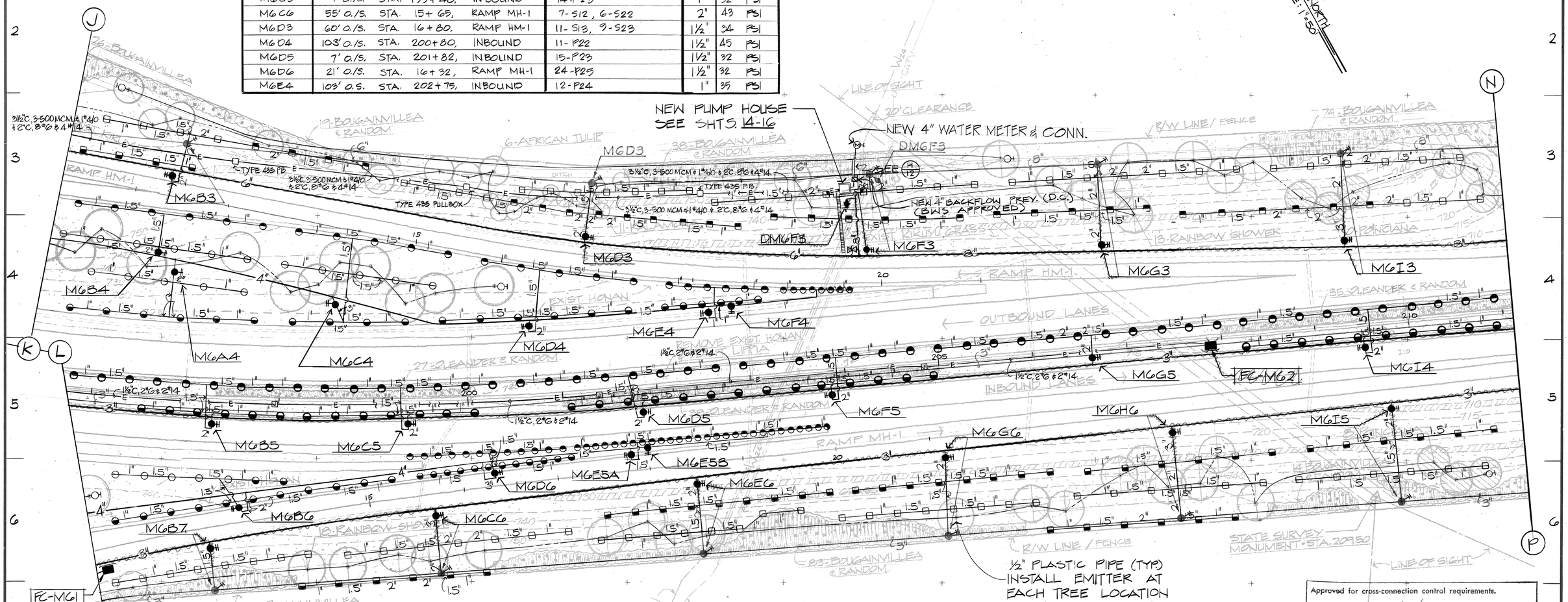

BANK NO.	LOCATION			HEAD (NO.-TYPE)
M6E5A	36' O/S.	STA. 202+80,	INBOUND	14-P26
M6E5B	36' O/S.	STA. 203+20,	INBOUND	11-P26
M6E6	44' O/S.	STA. 18+50,	RAMP MH-1	8-S13, 9-S23
M6F3	68' O/S.	STA. 19+80,	RAMP HM-1	6-S12, 8-S22
M6F4	6' O/S.	STA. 19+30,	RAMP HM-1	8-P26
M6F5	7' O/S.	STA. 204+00,	INBOUND	14-P23
M6G3	13' O/S.	STA. 21+33,	RAMP HM-1	7-S12, 5-S22
M6G5	7' O/S.	STA. 206+70,	INBOUND	11-P23
M6G6	107' O/S.	STA. 199+97,	INBOUND	8-S13, 8-S23
M6H6	108' O/S.	STA. 207+50,	INBOUND	6-S12, 12-S22
M6I3	150' O/S.	STA. 209+50,	IN BOUND	9-S12, 6-S22
M6I4	7' O/S.	STA. 209+68,	INBOUND	20-P23
M6I5	105' O/S.	STA. 209+84,	INBOUND	6-S12, 6-S22

BANK NO.	CONTROL VLV. SIZE	CONTROL VLV. PRESS.
M6E5A	1"	17 PSI
M6E5B	1"	31 PSI
M6E6	1½"	33 PSI
M6F3	2"	43 PSI
M6F4	1"	20 PSI
M6F5	1"	32 PSI
M6G3	2"	45 PSI
M6G5	1"	33 PSI
M6G6	1½"	33 PSI
M6H6	2"	45 PSI
M6I3	2"	43 PSI
M6I4	1½"	33 PSI
M6I5	2"	45 PSI

Approved for cross-connection control requirements.

Board of Water Supply — Date: 10-8-76

MELVYN S. MASUDA — REGISTERED PROFESSIONAL ENGINEER No. 2218 — HAWAII, U.S.A.

CURTIS Q. H. YEE — REGISTERED PROFESSIONAL ENGINEER No. 2624-E — HAWAII, U.S.A.

This work was prepared by me or under my supervision.

STATE OF HAWAII
DEPARTMENT OF TRANSPORTATION
HIGHWAYS DIVISION

PROJECT NO. I-H2-1(13):4

MILILANI INTERCHANGE
SPRINKLER PLAN
AREA "M-6"

SHEET No. 9 OF 25 SHEETS

STATIONS PLOTTED BY ____ DATE ____
TRACED BY ____
DESIGNED BY ____
QUANTITIES BY ____
CHECKED BY ____

GENERAL PLAN — NOTE BOOK ____ PG. ____

18R

FED. ROAD DIST. NO.	STATE	FED. AID PROJ. NO.	FISCAL YEAR	SHEET NO.	TOTAL SHEETS
HAWAII	HAW.	I-H2-1(13):4	1977	19	34

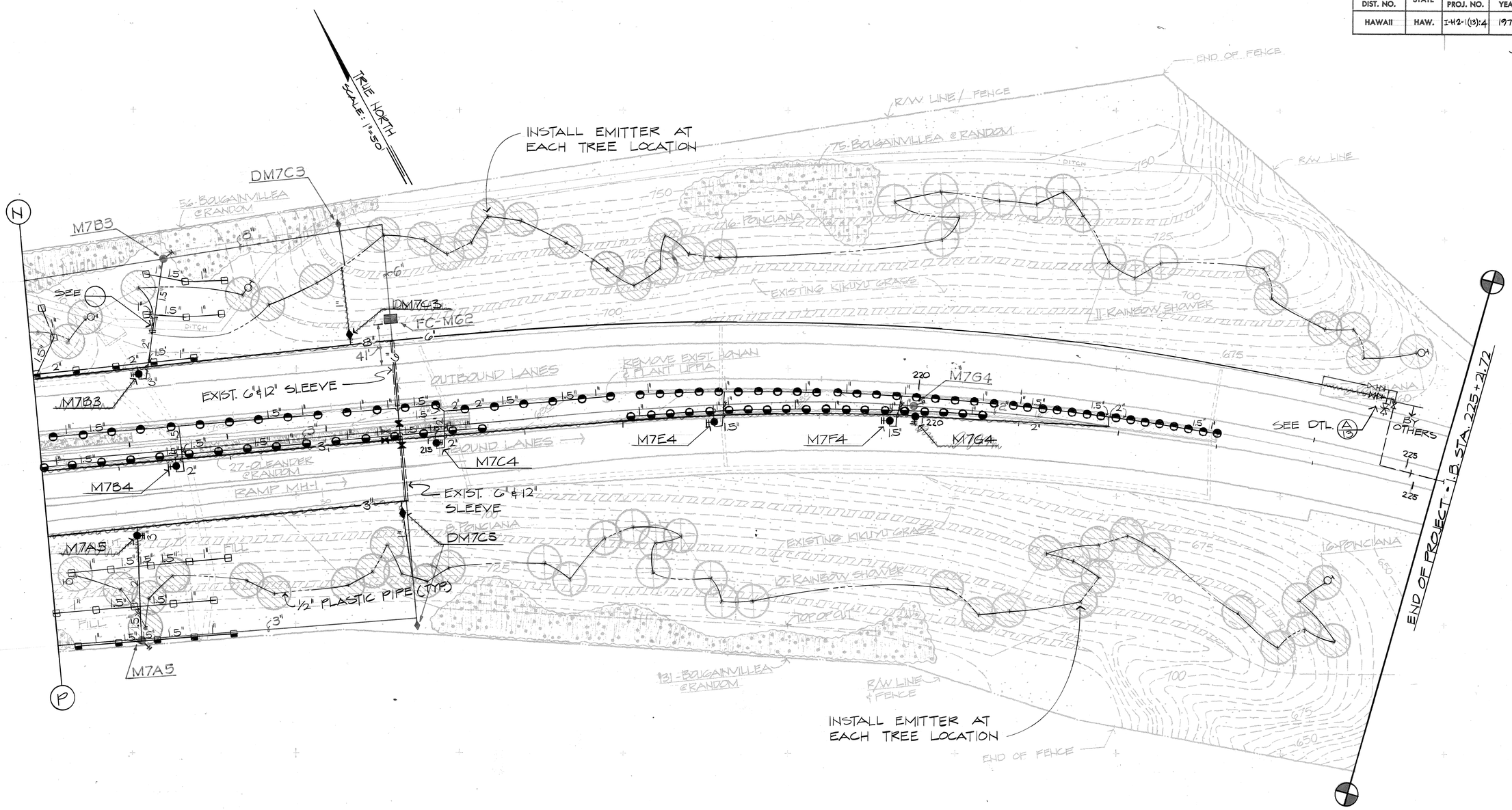

BANK NO.	LOCATION		HEAD (NO.-TYPE)	CONTROL VLV. SIZE	CONTROL VLV. PRESS.
M7A5	102' O./S.	STA. 212+12, INBOUND	10-S12, 5-S22	2"	43 PSI
M7B3	103' O./S.	STA. 212+25, INBOUND	8-S12, 5-S22	2"	43 PSI
M7B4	7' O./S.	STA. 212+50, INBOUND	20-P23	1½"	33 PSI
M7C4	7' O./S.	STA. 215+17, INBOUND	16-P23	1½"	32 PSI
M7E4	7' O./S.	STA. 218+03, INBOUND	20-P24	1"	38 PSI
M7F4	7' O./S.	STA. 219+75, INBOUND	18-P24	1"	38 PSI
M7G4	7' O./S.	STA. 221+90, INBOUND	15-P25	1½"	38 PSI

DATE	REVISION
11/17/76	S23, S24 & S25 Sprinkler Heads in BANK Nos. M7B4, M7C4, M7E4, M7F4 & M7G4 replaced with P23, P24 & P25 Sprinkler Heads per Addendum No. 1

CURTIS G. H. YEE
REGISTERED PROFESSIONAL ENGINEER
No. 2624-E
HAWAII, U.S.A.

This work was prepared by me or under my supervision.

STATE OF HAWAII
DEPARTMENT OF TRANSPORTATION
HIGHWAYS DIVISION

PROJECT NO. I-H2-1(13):4

MILILANI INTERCHANGE
SPRINKLER PLAN
AREA "M-7"

SHEET No. 10 OF 25 SHEETS

ORIGINAL PLAN | SURVEY PLOTTED BY | DRAWN BY | TRACED BY | DESIGNED BY | QUANTITIES BY | CHECKED BY | DATE | NOTE BOOK No.

19R

FED. ROAD DIST. NO.	STATE	FED. AID PROJ. NO.	FISCAL YEAR	SHEET NO.	TOTAL SHEETS
HAWAII	HAW.	I-H2-1(13):4	1977	20	34

NOTE: TEES, GATE VALVE, BOX, COVER, UNIONS, NIPPLES, ADAPTERS, CRUSHED ROCK, ETC. SHALL BE CONSIDERED INCIDENTAL TO THE VALVE INSTALLATION AND SHALL NOT BE MEASURED OR PAID FOR SEPARATELY.

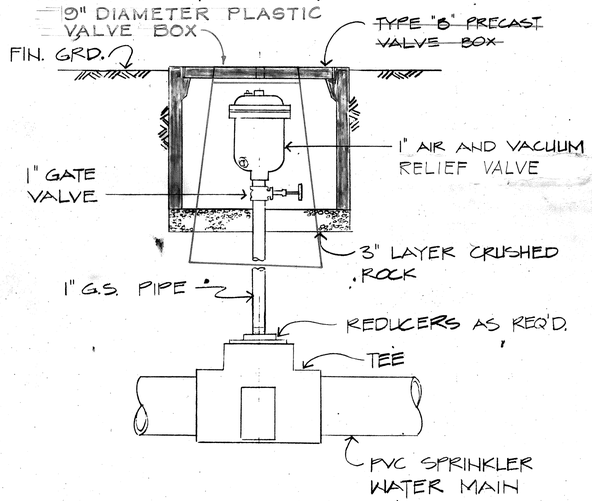

A/11 TYP. AIR & VACUUM RELIEF VALVE
N.T.S.

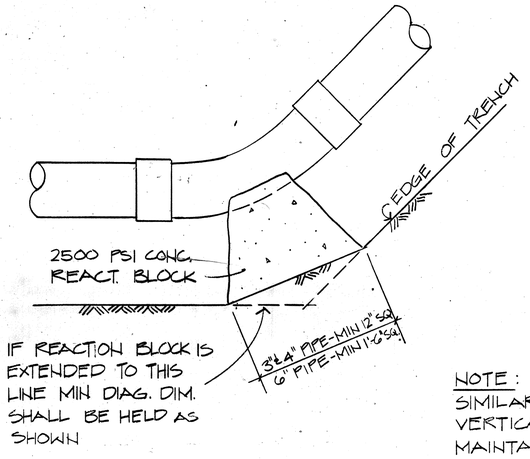

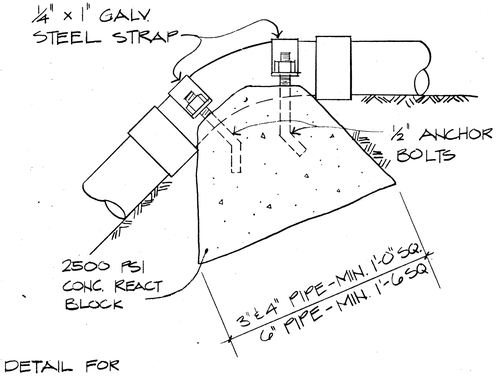

NOTE:
SIMILAR DETAIL FOR VERTICAL BENDS. MAINTAIN SAME MIN. DIMENSIONS.

B/11 TYP. REACTION BLOCK @ 45° BEND
N.T.S.

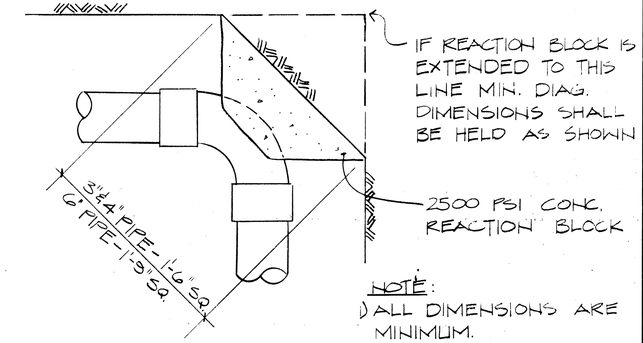

NOTE:
1) ALL DIMENSIONS ARE MINIMUM.
2) SIMILAR DETAIL FOR VERTICAL BENDS

C/11 TYP. REACTION BLOCK @ ELL
N.T.S.

NOTE:

1. THE SPRINKLER HEAD WITH THE REQUIRED RISER, SWING JOINT AND ANTI-DRAIN CHECK VALVE SHALL BE MEASURED AND PAID FOR AS A UNIT.
2. SWING JOINT ASSEMBLIES SHALL BE INSTALLED FOR ALL POP-UP SPRINKLER HEADS.
3. UNLESS OTHERWISE INDICATED, ANTI-DRAIN CHECK VALVES SHALL BE INSTALLED ON ALL SPRINKLER HEADS OF RADII 20, 30 AND 40 FEET.

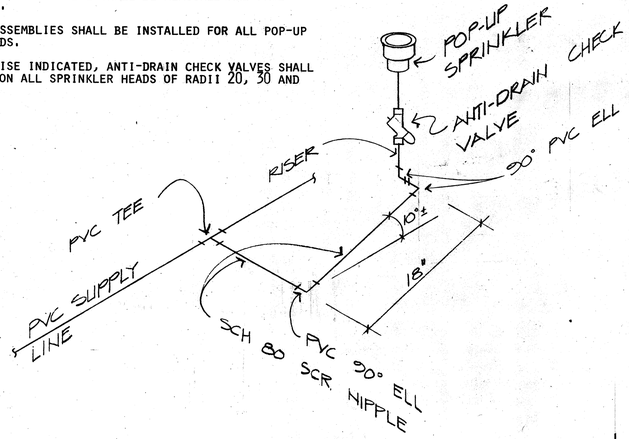

G/11 ISOMETRIC-SWING JOINT ASSEMBLY
N.T.S.

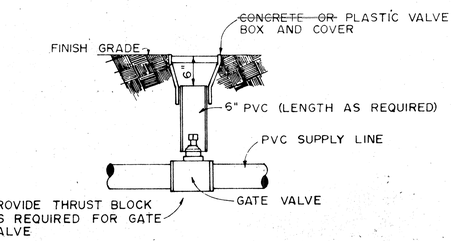

SECTION

E/11 GATE VALVE INSTALLATION
N.T.S.

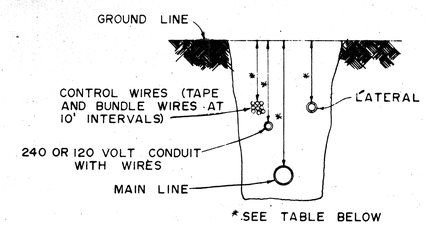

	*MINIMUM COVER
SPRINKLER LATERALS	18"
SPRINKLER MAINS	
4" AND SMALLER	24"
6"	30"
ELECTRICAL CONDUITS	24"
CONTROL WIRES	24"

SECTION

F/11 TRENCH DETAIL
N.T.S.

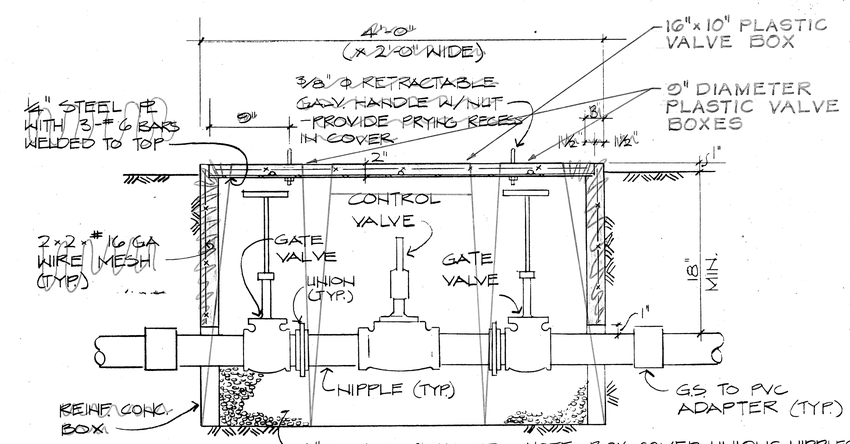

NOTE: BOX, COVER, UNIONS, NIPPLES, ADAPTERS, CRUSHED ROCK, ETC. SHALL BE APPURTENANT TO THE VALVE INSTALLATION.

D/11 AUTO. SPRINKLER CONTROL VALVE
N.T.S.

DATE	REVISION
11/17/76	Revised terminology and title of value for Detail (A)

ORIGINAL PLAN — NOTE BOOK — SURVEY PLOTTED BY — DRAWN BY — TRACED BY — DESIGNED BY — QUANTITIES BY — CHECKED BY — DATE

United States of America

CURTIS Q. H. YEE — REGISTERED PROFESSIONAL ENGINEER — No. 2614-E — HAWAII, U.S.A. — This drawing prepared or under my supervision.

STATE OF HAWAII
DEPARTMENT OF TRANSPORTATION
HIGHWAYS DIVISION

PROJECT NO. I-H2-1(13):4

MILILANI INTERCHANGE
PIPING DETAIL

SHEET No. 11 OF 25 SHEETS

20R

FED. ROAD DIST. NO.	STATE	FED. AID PROJ. NO.	FISCAL YEAR	SHEET NO.	TOTAL SHEETS
HAWAII	HAW.	I-H2-1(13):4	1977	21	34

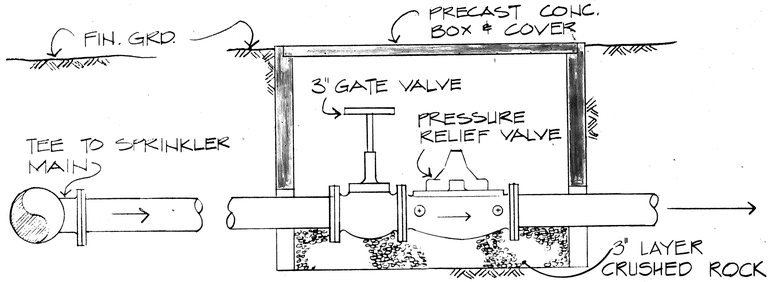

NOTE: BOX, COVER, UNIONS, NIPPLES, ADAPTERS, CRUSHED ROCK, ETC. SHALL BE CONSIDERED INCIDENTAL TO THE VALVE INSTALLATION AND SHALL NOT BE MEASURED OR PAID FOR SEPARATELY.

A/12 PRESSURE RELIEF VALVE ASSEMBLY
N.T.S.

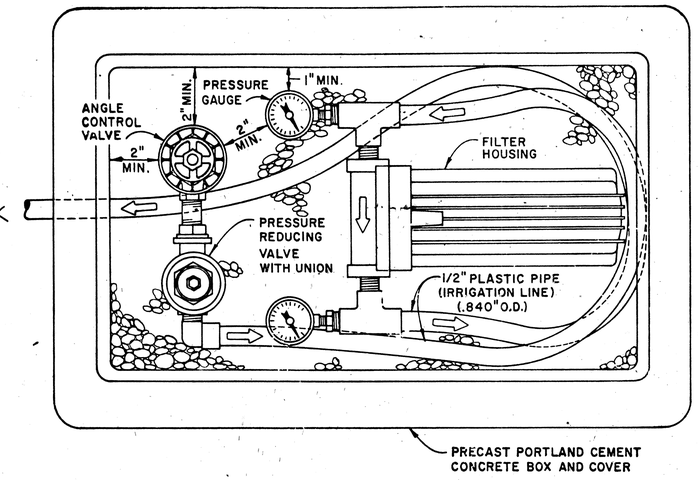

PLAN

B/12 VALVE ASSEMBLY UNIT

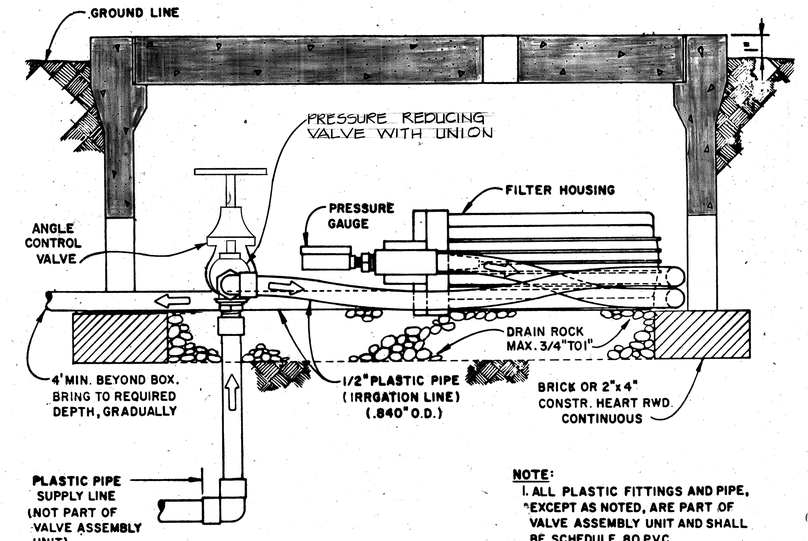

SECTION-ELEVATION

C/12 VALVE ASSEMBLY UNIT

NOTE:
1. ALL PLASTIC FITTINGS AND PIPE, EXCEPT AS NOTED, ARE PART OF VALVE ASSEMBLY UNIT AND SHALL BE SCHEDULE 80 PVC
2. BOX, COVER, UNIONS, NIPPLES, ADAPTERS, CRUSHED ROCK, ETC. SHALL BE CONSIDER INCIDENTAL TO THE VALVE INSTALLATION AND SHALL NOT BE MEASURED OR PAID FOR SEPARATELY.

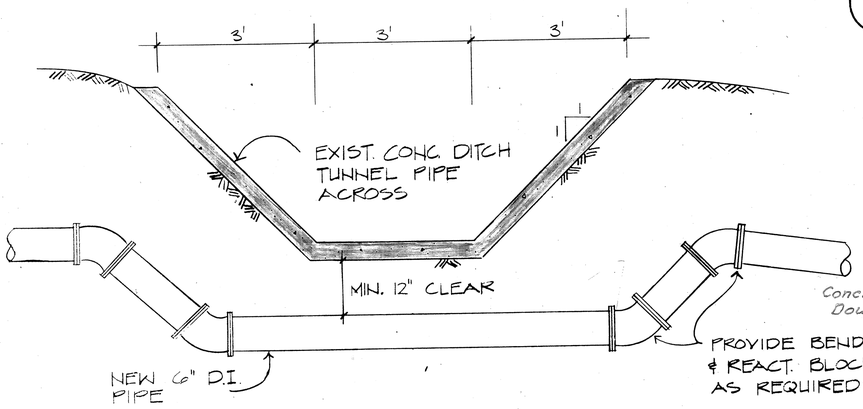

H/12 DETAIL
SC: 3/4" = 1'-0"

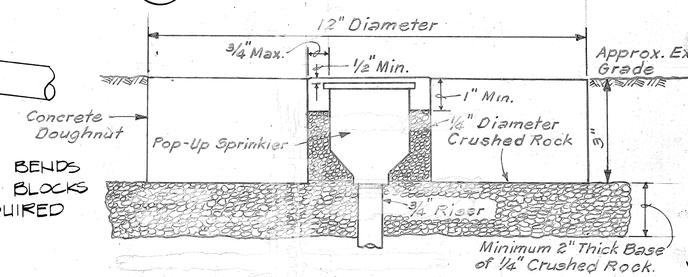

TYPICAL CONCRETE DOUGHNUT DETAILS
ROADWAY MEDIAN @ STA. 138+95 ± TO @ STA. 223+00
C.C.O. NO. 9
N.T.S.

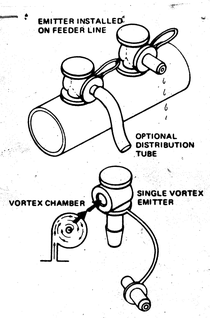

E/12 TYP. VORTEX EMITTER
N.T.S.

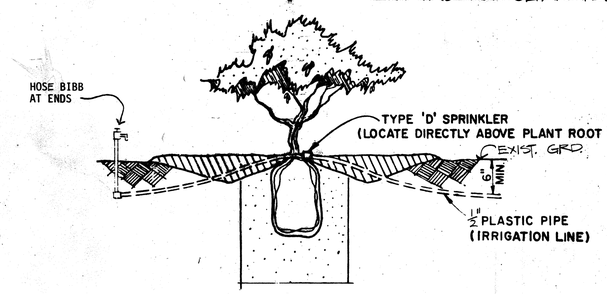

SECTION

D/12 PLASTIC PIPE (IRRIGATION LINE)

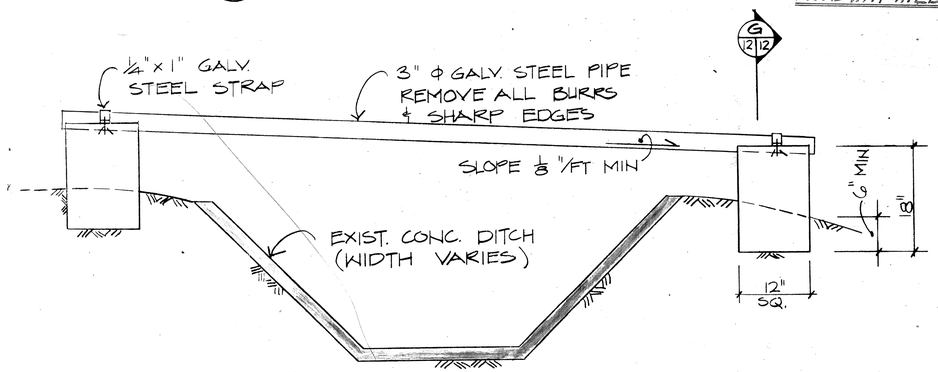

J/12 DRAINAGE DITCH CROSSING DTL. (TYP.)
N.T.S.

G/12|12

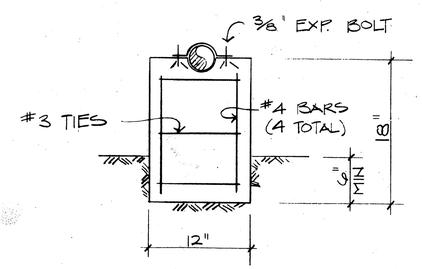

G/12|12 SECTION
N.T.S.

ORIGINAL PLAN		DATE
	SURVEY PLOTTED BY	
	DRAWN BY	
	TRACED BY	
NOTE BOOK	DESIGNED BY	
	QUANTITIES BY	
No.	CHECKED BY	

CHRIS O. H. YEE
REGISTERED PROFESSIONAL ENGINEER
No. 3634
STATE OF HAWAII
This work was prepared by me or under my supervision.

STATE OF HAWAII
DEPARTMENT OF TRANSPORTATION
HIGHWAYS DIVISION

PROJECT NO. I-H2-1(13):4

MILILANI INTERCHANGE
DETAILS

SHEET No. 12 OF 25 SHEETS

21

FED. ROAD DIST. NO.	STATE	FED. AID PROJ. NO.	FISCAL YEAR	SHEET NO.	TOTAL SHEETS
HAWAII	HAW.	I-H2-1(13):4	1977	22	34

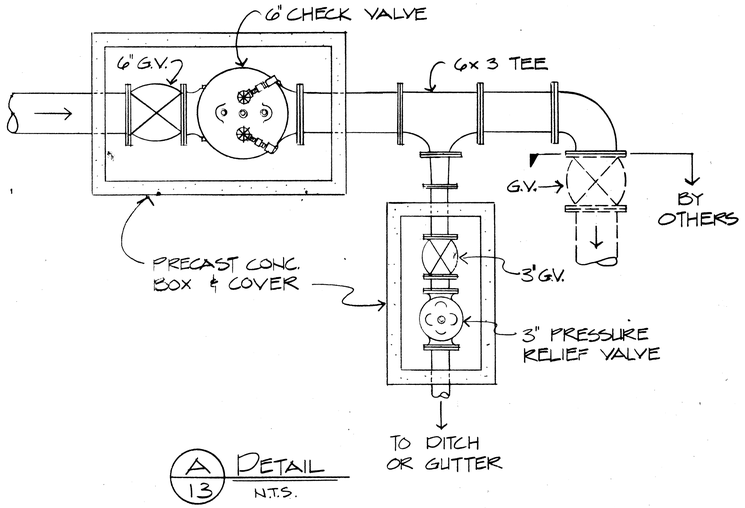

A/13 DETAIL
N.T.S.

NOTE:

AFTER THE CONCRETE IS POURED AND LEVELED THE PEDESTAL HOLD-DOWN BOLTS MUST BE POSITIONED. FOR THIS PURPOSE A POSITIONING TEMPLATE WITH BOLTS ATTACHED IS PACKED IN THE SHIPPING CARTION WITH THE PEDESTAL. PLACE THE TEMPLATE IN POSITION ON THE WET CONCRETE AND THEN WORK THE HEAD OF THE BOLTS DOWN INTO THE WET CONCRETE.

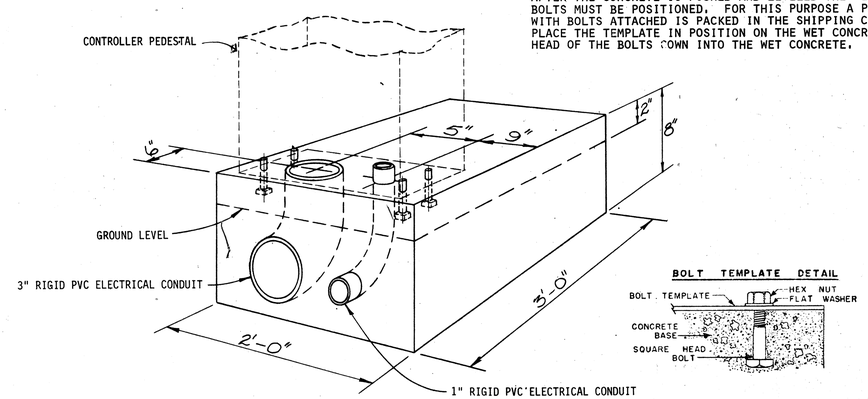

B/13 DETAIL
N.T.S.

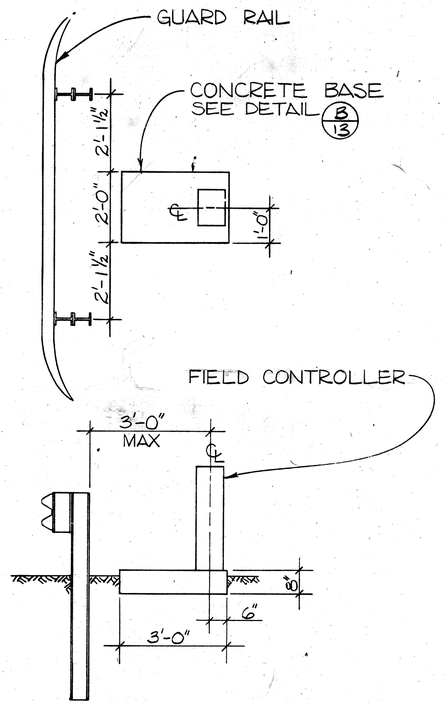

C/13 DETAIL - TYP.
SCALE: ½"=1'-0"

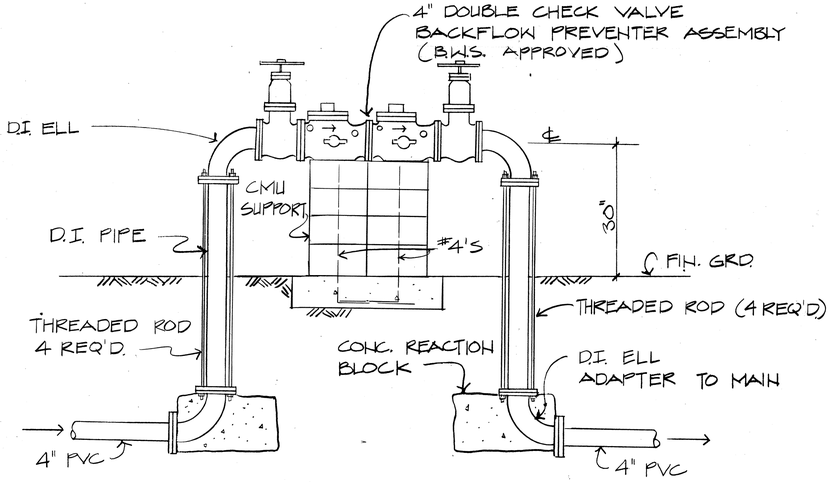

F/13 BACKFLOW PREVENTER ASSEMBLY
N.T.S.

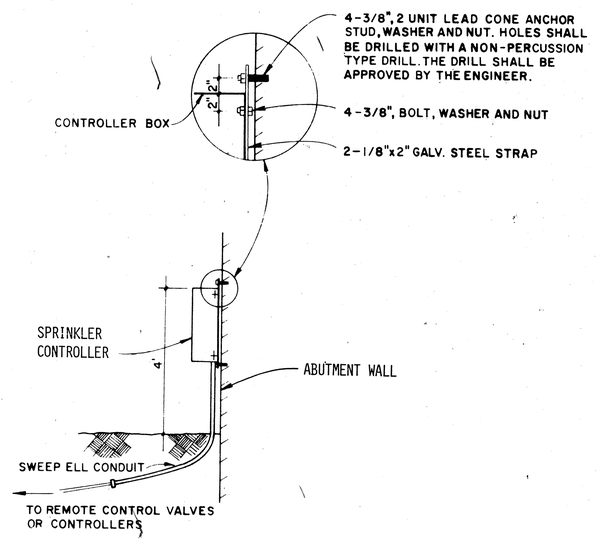

E/13 FIELD CONTROLLERS ANCHORED TO WALL
N.T.S.

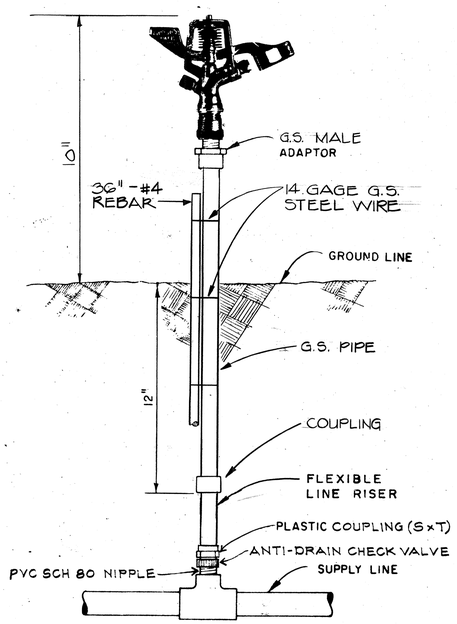

D/13 DET - RISER
N.T.S.

DATE	REVISION
11/17/76	Detail C/13, not applicable for Central Programmer per Addendum No. 1.

CURTIS Q. H. YEE
REGISTERED PROFESSIONAL ENGINEER
No. 2621-E
HAWAII, U.S.A.
This work was prepared by me or under my supervision.

STATE OF HAWAII
DEPARTMENT OF TRANSPORTATION
HIGHWAYS DIVISION

PROJECT NO. I-H2-1(13):4

MILILANI INTERCHANGE
DETAILS

SHEET No. 13 OF 25 SHEETS

ORIGINAL PLAN | SURVEY PLOTTED BY | TRACED BY | DESIGNED BY | QUANTITIES BY | CHECKED BY | DATE | NOTE BOOK No.

22R

FED. ROAD DIST. NO.	STATE	FED. AID PROJ. NO.	FISCAL YEAR	SHEET NO.	TOTAL SHEETS
HAWAII	HAW.	I-H2-1(13):4	1979	C022 S-1	34

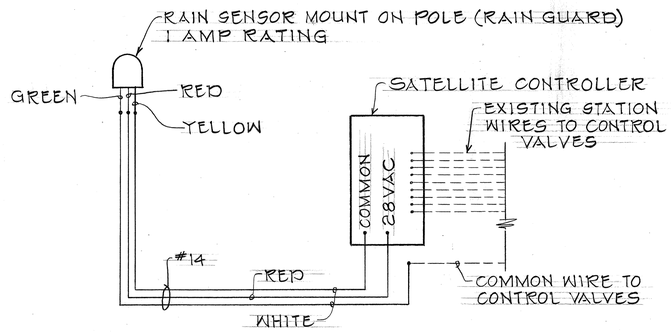

RAIN SENSOR WIRE DIAGRAM AT SATELLITE CONTROLLER

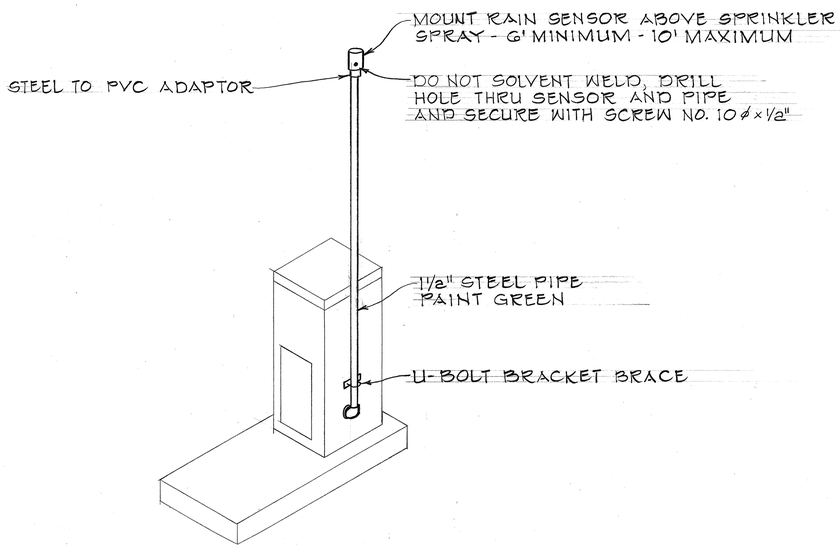

TYPICAL RAIN SENSOR INSTALLATION AT SATELLITE CONTROLLER

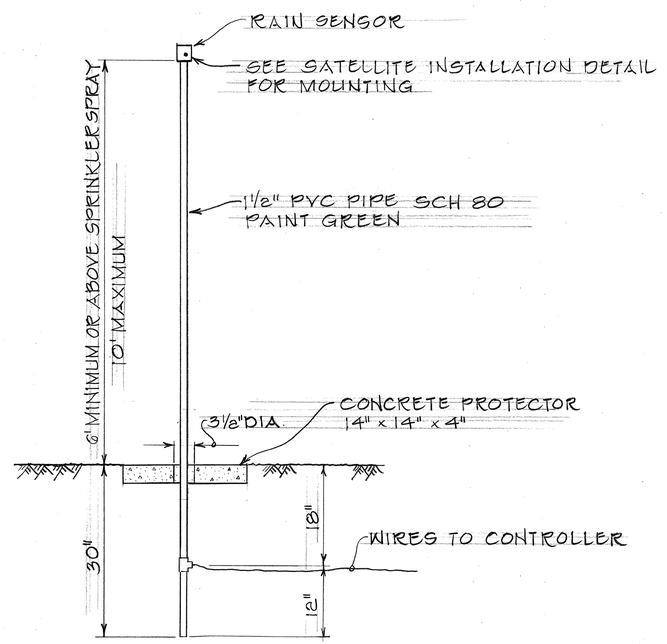

TYPICAL DETAIL RAIN SENSOR ON POLE

DATE	REVISION
31 Jan 79	Sheet added to Contract Plan to show additional details.

STATE OF HAWAII
DEPARTMENT OF TRANSPORTATION
LAND TRANSPORTATION FACILITIES DIVISION

IRRIGATION SYSTEM

DETAILS

INTERSTATE ROUTE H-2
PROJ. NO. I-H2-1(13):4

Not to Scale Date: Jan 1979

SHEET No. 13A OF 25 SHEETS

ORIGINAL PLAN
SURVEY PLOTTED BY ____ DATE
DRAWN BY " " " "
TRACED BY " " " "
DESIGNED BY
QUANTITIES BY
CHECKED BY
NOTE BOOK
No.

C022 S-1

FED. ROAD DIST. NO.	STATE	FED. AID PROJ. NO.	FISCAL YEAR	SHEET NO.	TOTAL SHEETS
HAWAII	HAW.	I-H2-1(3):4	1977	23	34

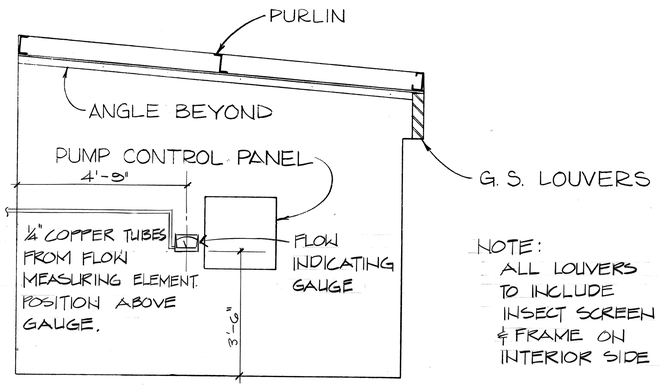

NOTE:
ALL LOUVERS TO INCLUDE INSECT SCREEN & FRAME ON INTERIOR SIDE

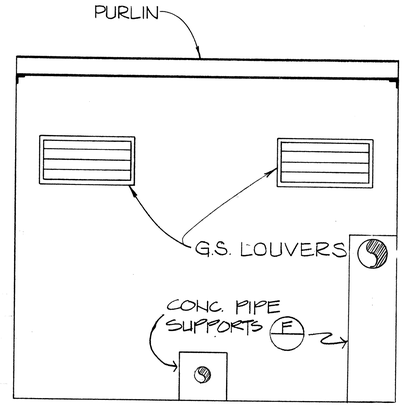

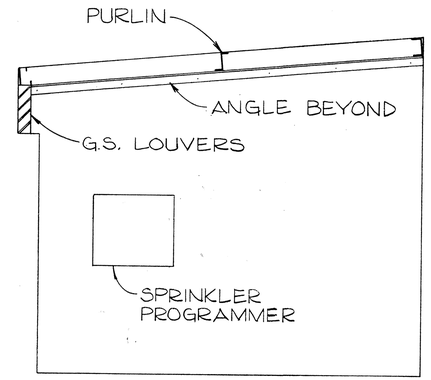

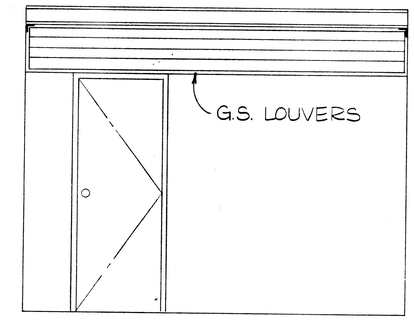

W/14 INTERIOR ELEVATION "W"
SCALE: 1/2" = 1'-0"

Y/14 INTERIOR ELEVATION "Y"
SCALE: 1/2" = 1'-0"

X/14 INTERIOR ELEVATION "X"
SCALE: 1/2" = 1'-0"

Z/14 INTERIOR ELEVATION "Z"
SCALE: 1/2" = 1'-0"

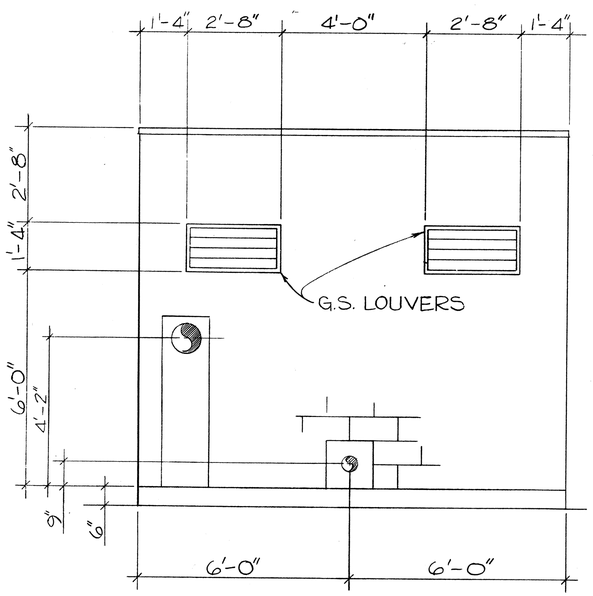

G/14 EXTERIOR EAST ELEVATION
SCALE 1/2" = 1'-0"

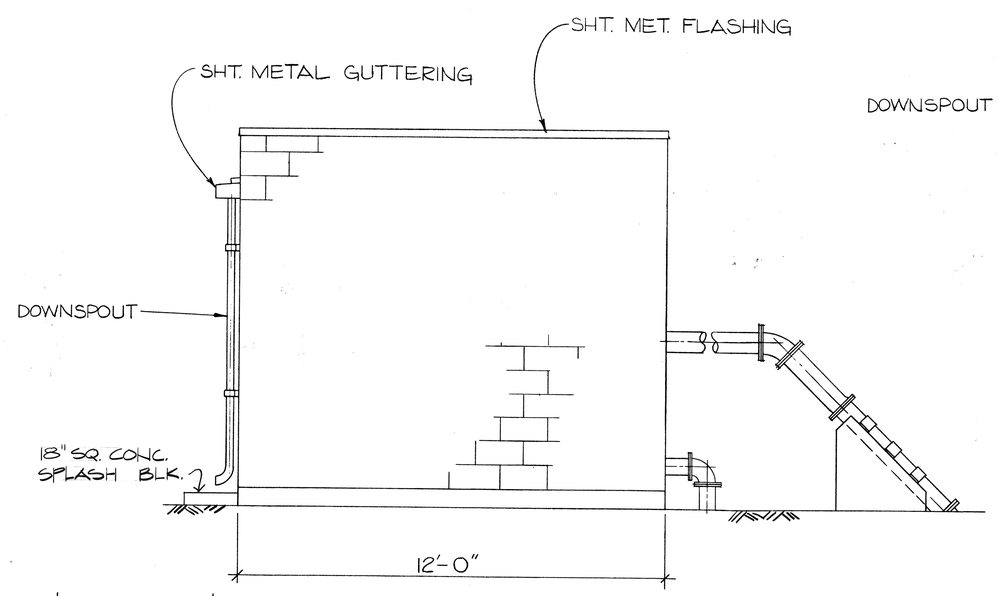

F/14 EXTERIOR SOUTH ELEVATION
SCALE 1/2" = 1'-0"
OPPOSITE FOR NORTH ELEV.

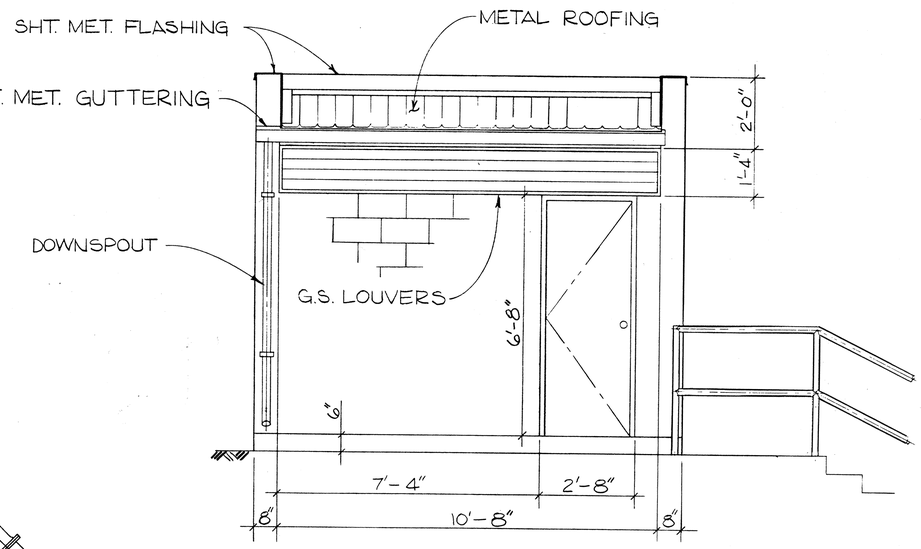

E/14 EXTERIOR WEST ELEVATION
SCALE 1/2" = 1'-0"

DATE	REVISION
11/17/76	On Detail W/14 deleted part of reference to Flow Indicating Gauge per Addendum No. 1.

1776 1976

CURTIS Q. H. YEE
REGISTERED PROFESSIONAL ENGINEER
No. 2624-E
HAWAII, U.S.A.
This work was prepared by me or under my supervision.

STATE OF HAWAII
DEPARTMENT OF TRANSPORTATION
HIGHWAYS DIVISION

PROJECT NO. I-H2-1(13):4

MILILANI INTERCHANGE
PUMP HOUSE
ELEVATIONS

SHEET No. 14 OF 25 SHEETS

ORIGINAL PLAN
SURVEY PLOTTED BY
DRAWN BY
TRACED BY
DESIGNED BY
QUANTITIES BY
CHECKED BY
DATE
NOTE BOOK
No.

23R

FED. ROAD DIST. NO.	STATE	FED. AID PROJ. NO.	FISCAL YEAR	SHEET NO.	TOTAL SHEETS
HAWAII	HAW.	I-H2-1(13):4	1977	24	34

- (A) 3" GATE VALVE
- (B) 3" FLEXIBLE SPHERE-TYPE REINF. RUBBER CONNECTOR
- (C) 3" CHECK VALVE
- (D) 4" BACKFLOW PREVENTER
- (E) FLOW MEASURING ELEMENT
- (F) 1" AIR RELEASE VALVE
- (G) 4" GATE VALVE
- (H) 4" FLEXIBLE SPHERE-TYPE REINF. RUBBER CONNECTOR
- (J) FLOW INDICATING GAUGE w/CONTACT
- (K) VANE-TYPE FLOW SWITCH

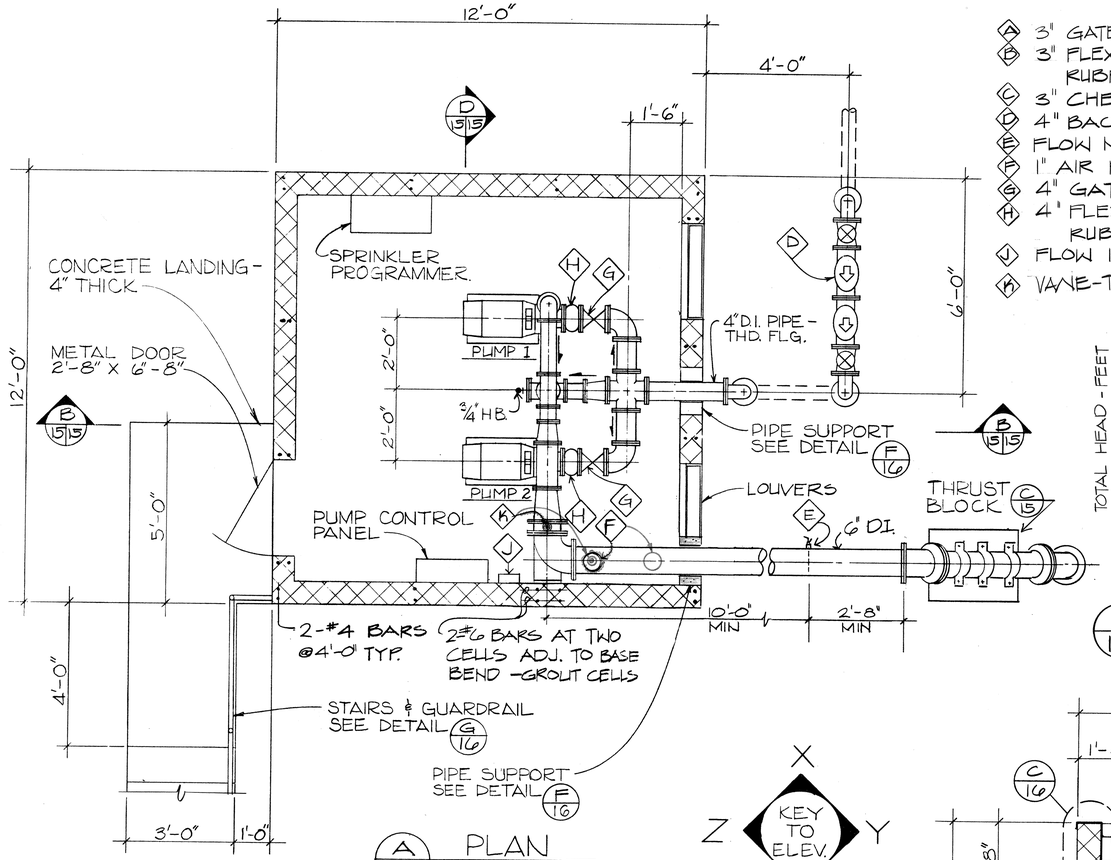

A 15 PLAN
SCALE: 1/2" = 1'-0"

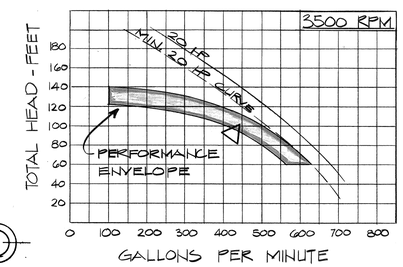

F 15 PUMP PERFORMANCE CURVE

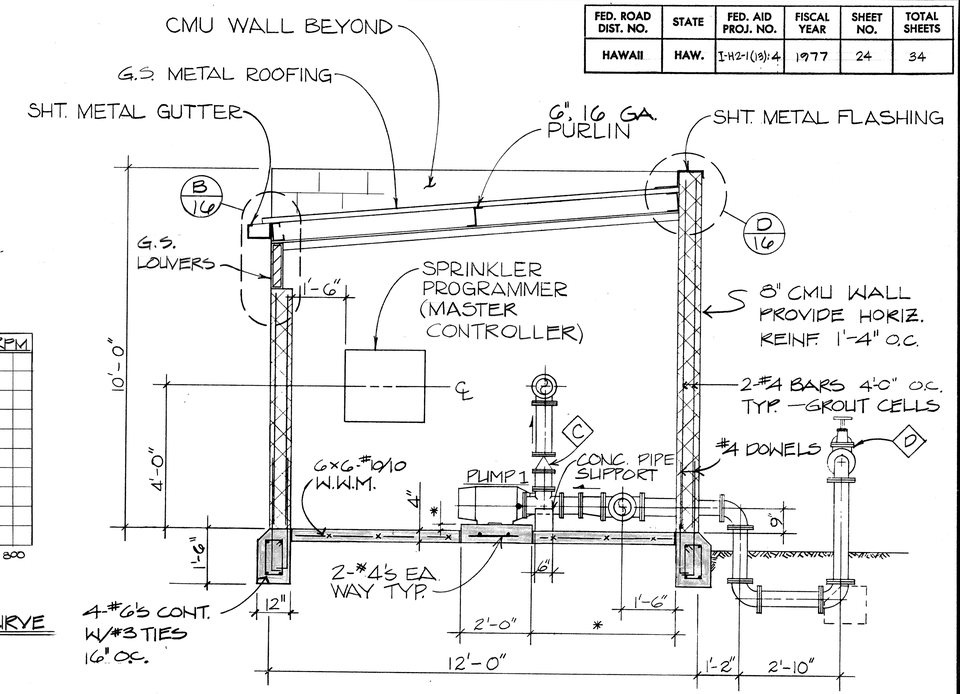

B 15|15 SECTION
SCALE: 1/2" = 1'-0"

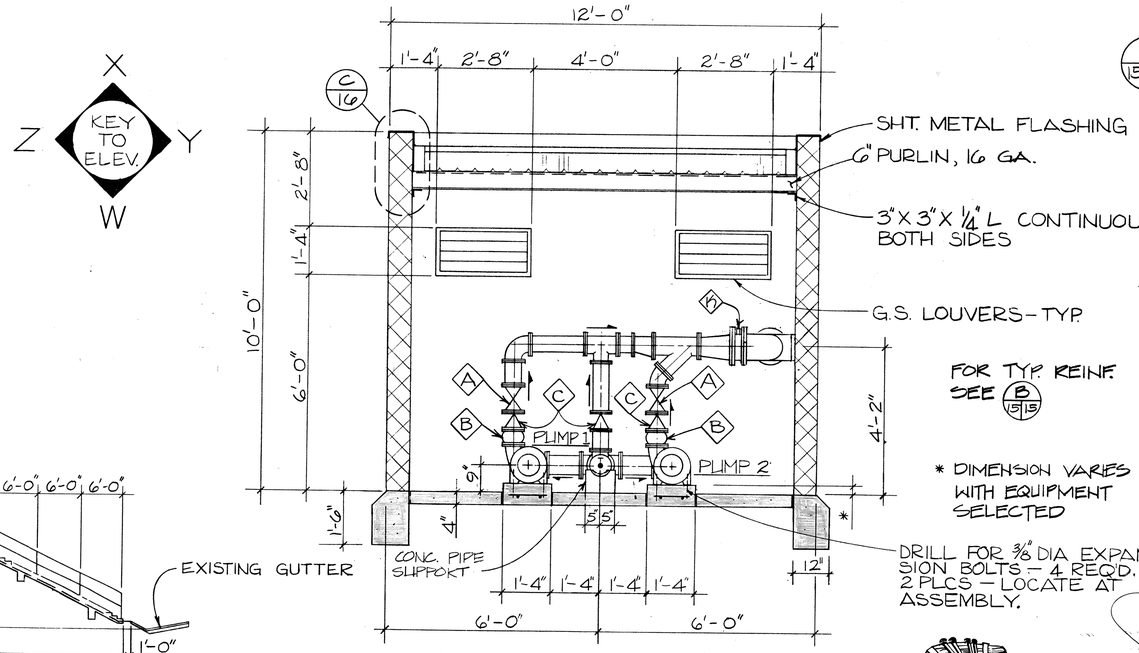

D 15|15 SECTION
SCALE: 1/2" = 1'-0"

E 15 PROFILE - STAIRS
SCALE: 1/10" = 1'-0"

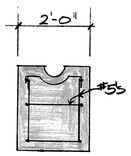

SEC. "A"

FOR TYP. REINF. SEE B 15|15

* DIMENSION VARIES WITH EQUIPMENT SELECTED

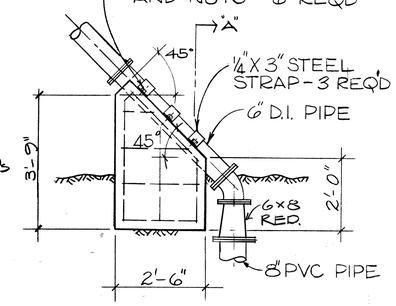

C 15 THRUST BLOCK
SCALE: 1/2" = 1'-0"

DATE	REVISION
11/17/76	Pipe Support reference circle on Detail (A/15) to read (F/16).

ORIGINAL PLAN | SURVEY PLOTTED BY | DRAWN BY | TRACED BY | DESIGNED BY | QUANTITIES BY | CHECKED BY | NOTE BOOK No. | DATE

PHILLIP K. H. YEE — REGISTERED PROFESSIONAL ENGINEER No. 4861 — HAWAII, U.S.A.

CURTIS Q. H. YEE — REGISTERED PROFESSIONAL ENGINEER No. 2674-S — HAWAII, U.S.A.

This work was prepared by me or under my supervision.

STATE OF HAWAII
DEPARTMENT OF TRANSPORTATION
HIGHWAYS DIVISION

PROJECT NO. I-H2-1(13):4

MILILANI INTERCHANGE
PUMP HOUSE
SECTIONS

SHEET No. 15 OF 25 SHEETS

24R

K+E CRYSTALENE® IMAGING PAPER

FED. ROAD DIST. NO.	STATE	FED. AID PROJ. NO.	FISCAL YEAR	SHEET NO.	TOTAL SHEETS
HAWAII	HAW.	I-H2-1(13):4	1977	25	34

NOTE:
ALL PIPING SHOWN SHALL BE OF DUCTILE IRON CONSTRUCTION UNLESS OTHERWISE SPECIFIED.

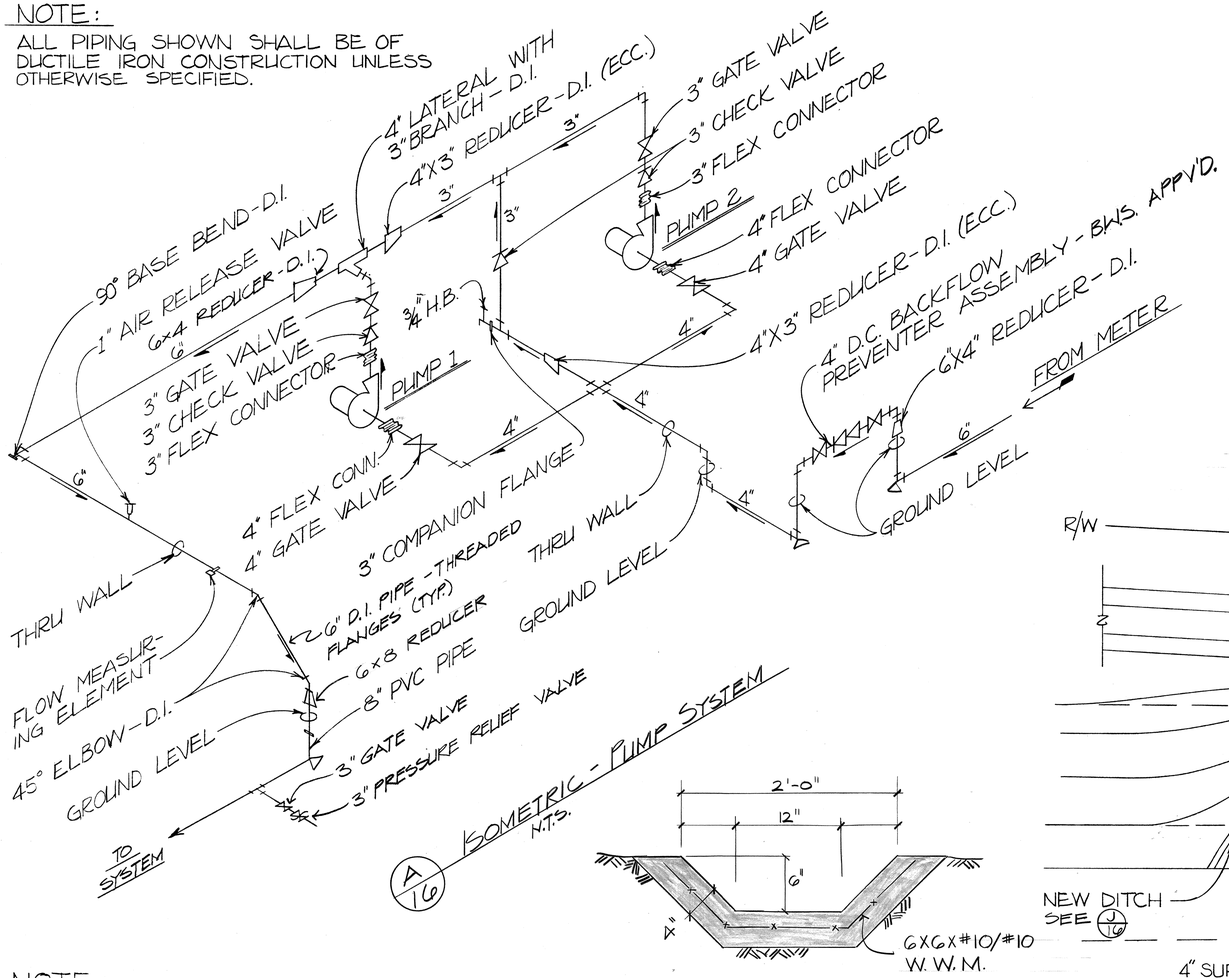

A/16 ISOMETRIC - PUMP SYSTEM
N.T.S.

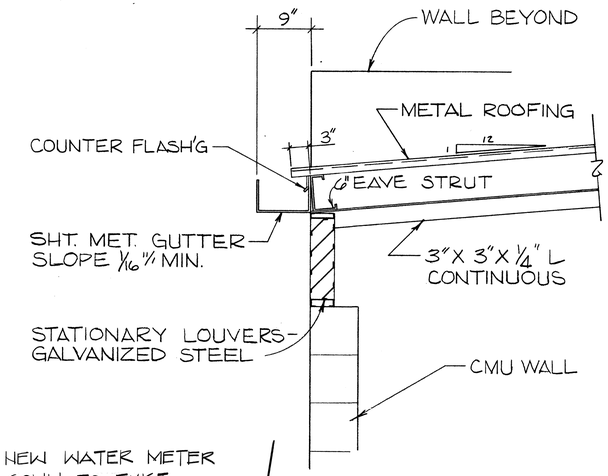

B/16 SECTION
SCALE: 1" = 1'-0"

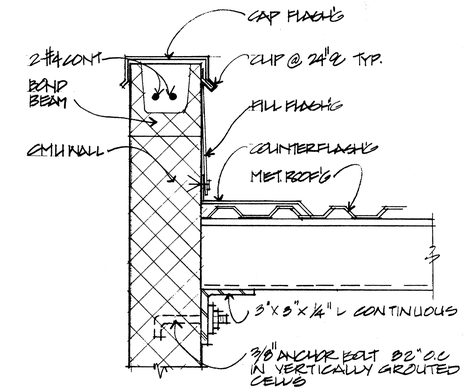

C/16 FLASHING @ SIDE WALL DET. SC: 1 1/2" = 1'-0"

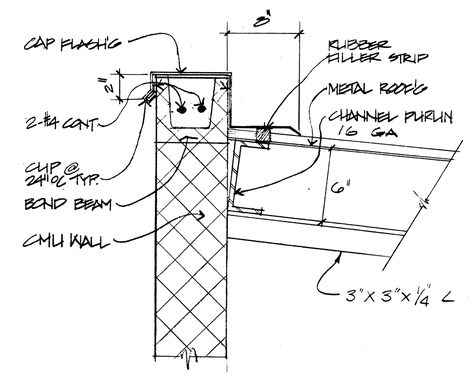

D/16 FLASHING @ BACK WALL SC: 1 1/2" = 1'-0"

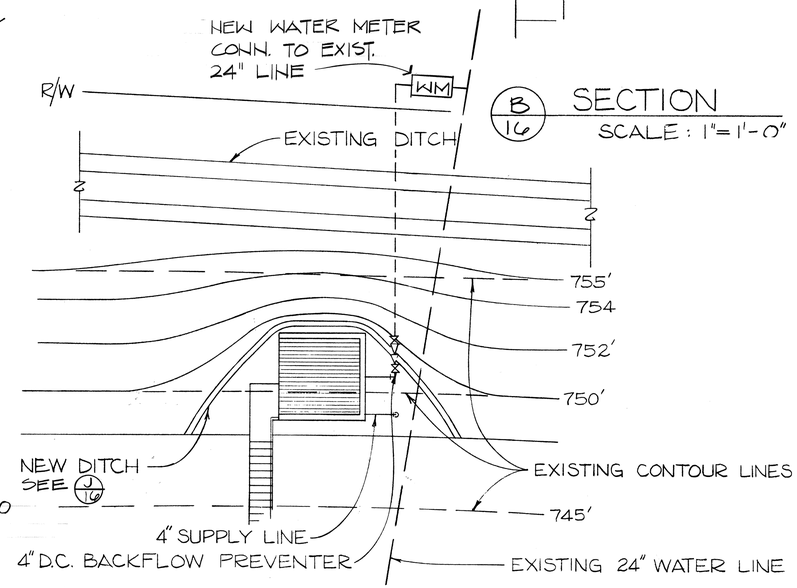

E/16 PLAN - PUMPHSE
SCALE: 1/16" = 1'-0"

J/16 DITCH DTL.
SC: 1 1/2" = 1'-0"

NOTE:
ALL JOINTS SHALL BE WELDED, GROUND, AND COATED WITH TWO COATS OF ZRC. ENTIRE RAILING SHALL BE PAINTED W/2 COATS OF PORCH ENAMEL - DARK GREEN.

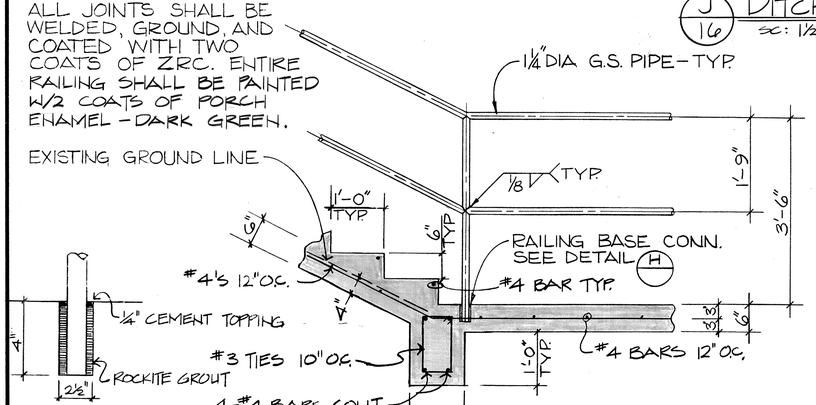

H/16 DETAIL
SCALE: 3" = 1'-0"

G/16 STEP DETAIL
SCALE: 3/4" = 1'-0"

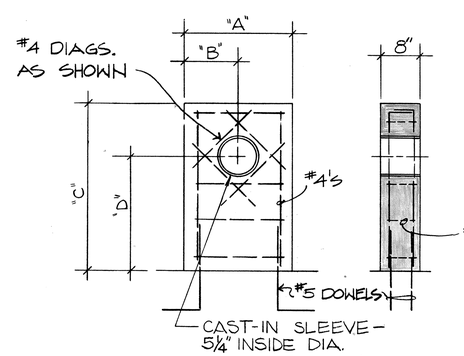

PIPE SUPPORT DIMENSIONS

	PUMP SUCTION PIPING	PUMP DISCHARGE PIPING
A	16"	16"
B	8"	8"
C	16"	56"
D	9"	50"

F/16 DETAIL
N.T.S.

SPIRIT OF 76

PHILLIP K. H. YEE REGISTERED PROFESSIONAL ENGINEER No. 461 HAWAII, U.S.A.

CURTIS Q. H. YEE REGISTERED PROFESSIONAL ENGINEER No. 2624 HAWAII, U.S.A.

This work was prepared by me or under my supervision.

STATE OF HAWAII
DEPARTMENT OF TRANSPORTATION
HIGHWAYS DIVISION

PROJECT NO. I-H2-1(13):4

MILILANI INTERCHANGE
PUMP HOUSE
DETAILS

SHEET No. 16 OF 25 SHEETS

		DATE
ORIGINAL PLAN	SURVEY PLOTTED BY	
	DRAWN BY	
	TRACED BY	
	DESIGNED BY	
NOTE BOOK No.	QUANTITIES BY	
	CHECKED BY	

FED. ROAD DIST. NO.	STATE	FED. AID PROJ. NO.	FISCAL YEAR	SHEET NO.	TOTAL SHEETS
HAWAII	HAW.	I-H2-1(13):4	1977	26	34

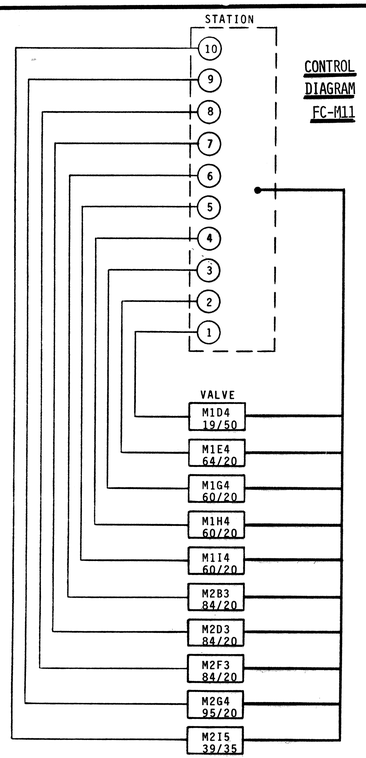

CONTROL DIAGRAM FC-M11

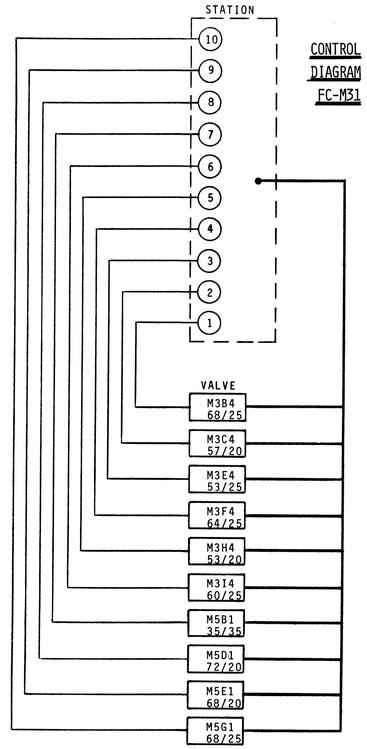

CONTROL DIAGRAM FC-M31

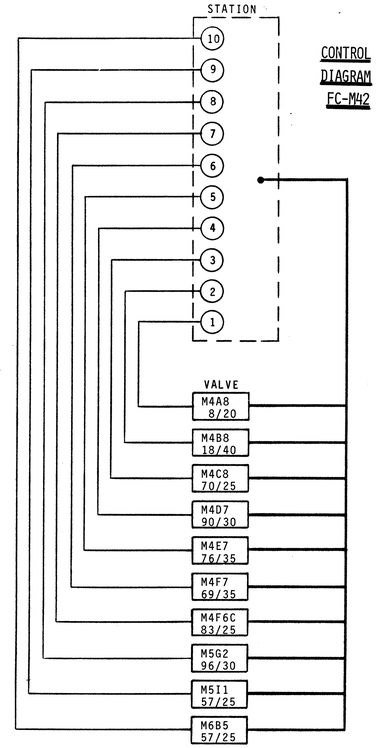

CONTROL DIAGRAM FC-M42

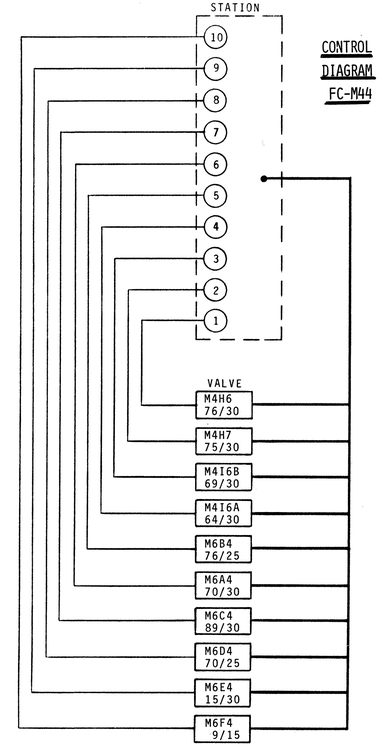

CONTROL DIAGRAM FC-M44

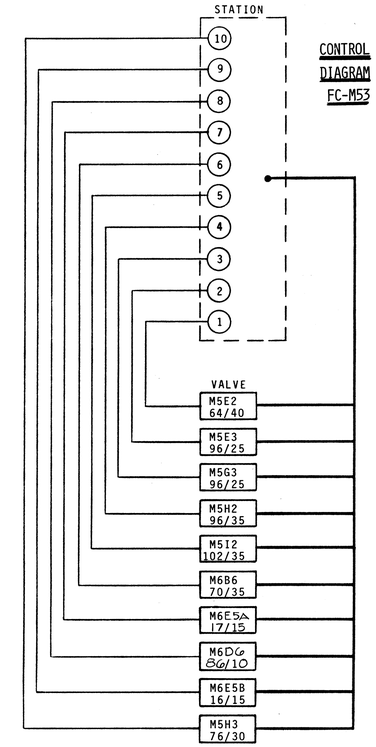

CONTROL DIAGRAM FC-M53

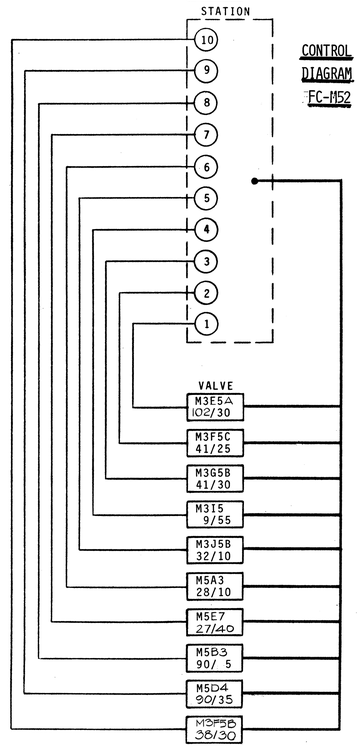

CONTROL DIAGRAM FC-M52

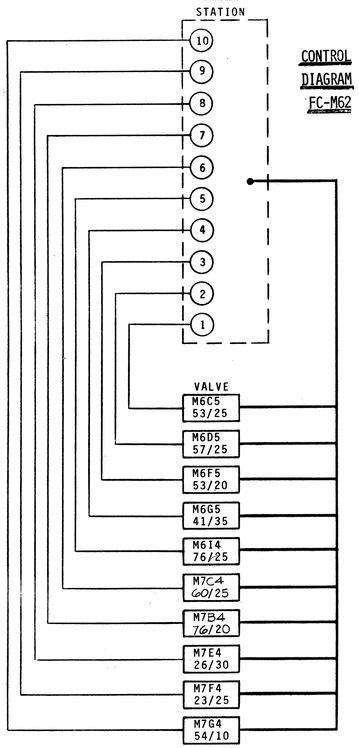

CONTROL DIAGRAM FC-M62

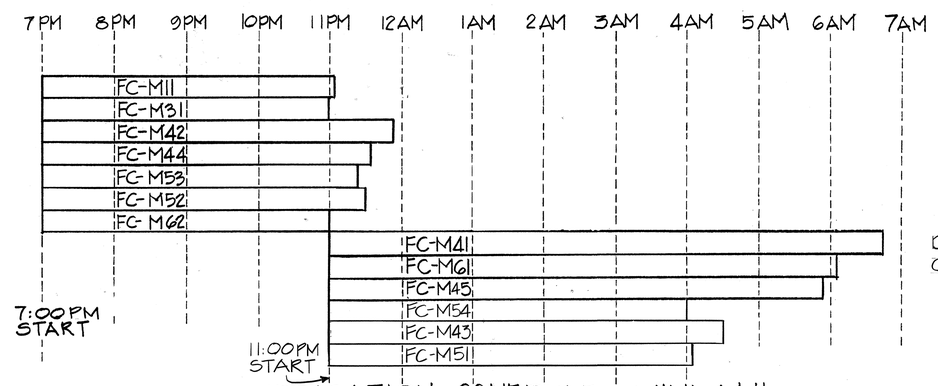

IRRIGATION SCHEDULE - MILILANI

(HORIZONTAL SCALE 1" = 1 HR.)

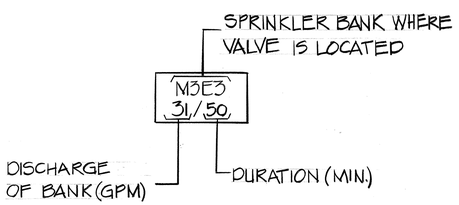

EXPLANATION OF VALVE IDENTIFICATION

CURTIS Q. H. YEE
REGISTERED PROFESSIONAL ENGINEER
No. 2624-E
HAWAII, U.S.A.
This work was prepared by me or under my supervision.

STATE OF HAWAII
DEPARTMENT OF TRANSPORTATION
HIGHWAYS DIVISION

PROJECT NO. I-H2-1(13):4

MILILANI INTERCHANGE

CONTROL DIAGRAMS

SHEET No. 17 OF 25 SHEETS

ORIGINAL PLAN | SURVEY PLOTTED BY | DRAWN BY | TRACED BY | DESIGNED BY | QUANTITIES BY | CHECKED BY | NOTE BOOK | NO. | DATE

K+E CRYSTALENG® TRACING PAPER

FED. ROAD DIST. NO.	STATE	FED. AID PROJ. NO.	FISCAL YEAR	SHEET NO.	TOTAL SHEETS
HAWAII	HAW.	I-H2-1(13):4	1977	27	34

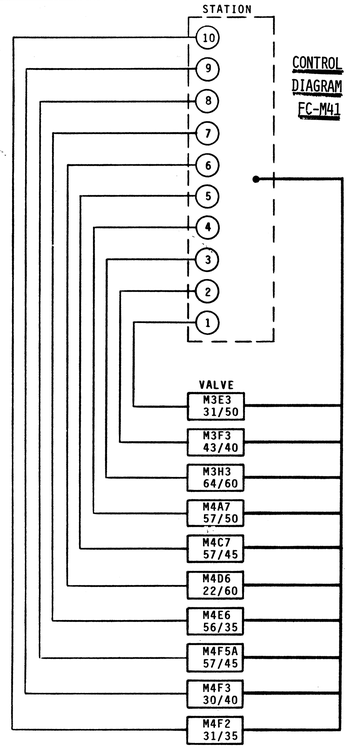

CONTROL DIAGRAM FC-M41

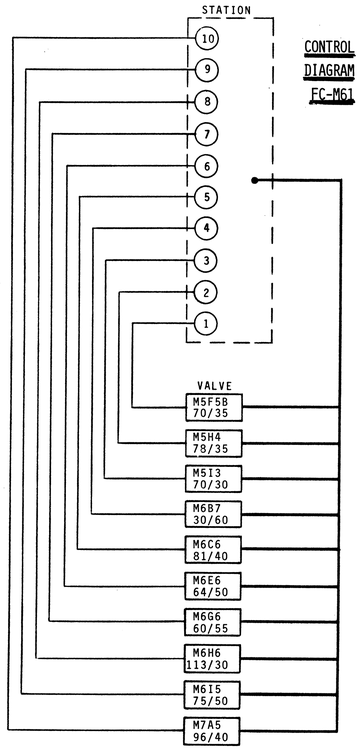

CONTROL DIAGRAM FC-M61

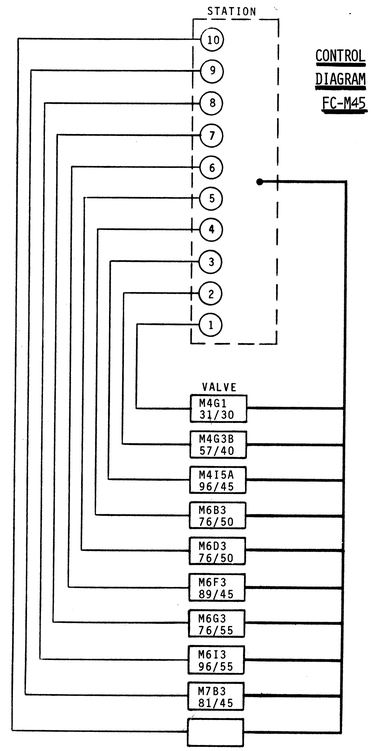

CONTROL DIAGRAM FC-M45

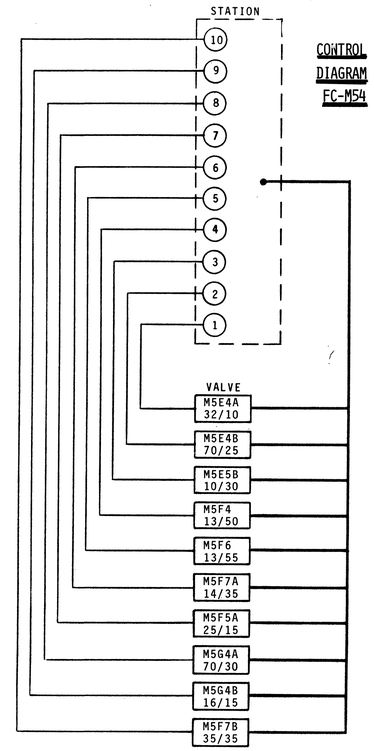

CONTROL DIAGRAM FC-M54

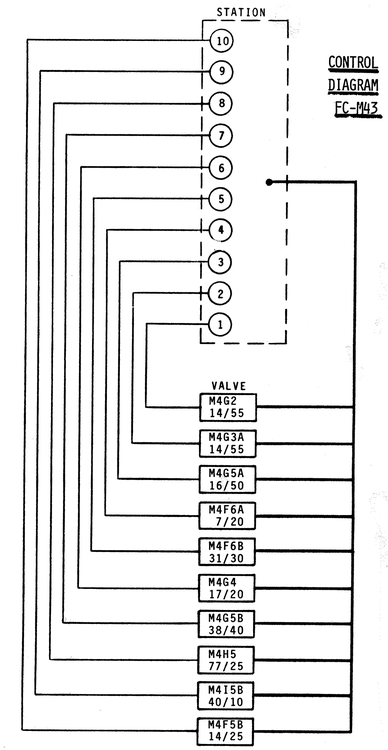

CONTROL DIAGRAM FC-M43

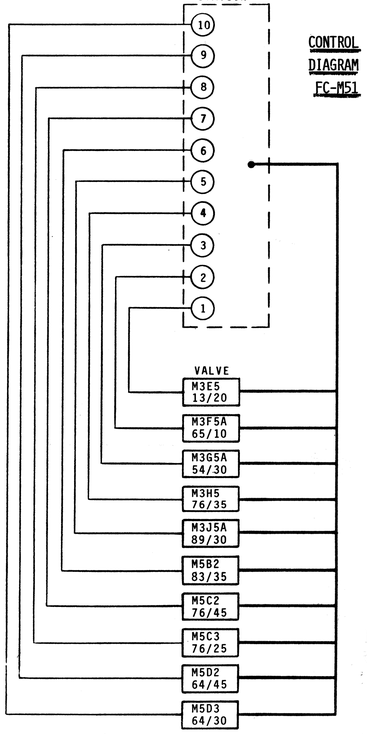

CONTROL DIAGRAM FC-M51

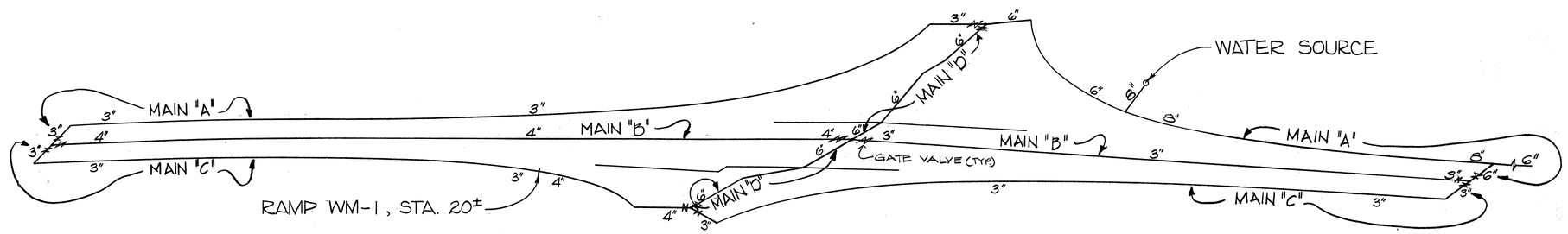

SPRINKLER BANK WHERE VALVE IS LOCATED

M3E3
31/50

DISCHARGE OF BANK (GPM)

DURATION (MIN.)

EXPLANATION OF VALVE IDENTIFICATION

A/18 ISOMETRIC — DISTRIBUTION SYSTEM
MILILANI INTERCHANGE N.T.S.

AMERICAN REVOLUTION BICENTENNIAL 1776-1976

CURTIS Q. H. YEE
REGISTERED PROFESSIONAL ENGINEER
No. 2684-E
HAWAII, U.S.A.
This work was prepared by me or under my supervision.

STATE OF HAWAII
DEPARTMENT OF TRANSPORTATION
HIGHWAYS DIVISION

PROJECT NO. I-H2-1(13):4

MILILANI INTERCHANGE
CONTROL DIAGRAMS

SHEET No. 18 OF 25 SHEETS

ORIGINAL PLAN
SURVEY PLOTTED BY
DRAWN BY
TRACED BY
DESIGNED BY
NOTE BOOK
QUANTITIES BY
CHECKED BY
DATE
No.

K+E CRYSTALENE

FED. ROAD DIST. NO.	STATE	FED. AID PROJ. NO.	FISCAL YEAR	SHEET NO.	TOTAL SHEETS
HAWAII	HAW.	I-H2-1(13):4	1977	28	34

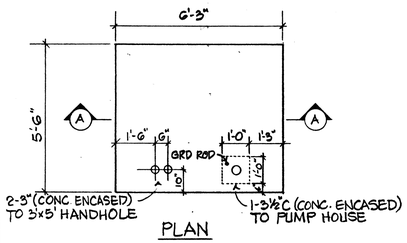

PLAN

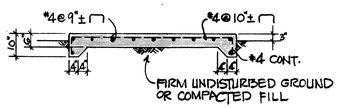

SECTION A-A

A/19 TRANSFORMER PAD DETAIL
SCALE: 3/8" = 1'-0"

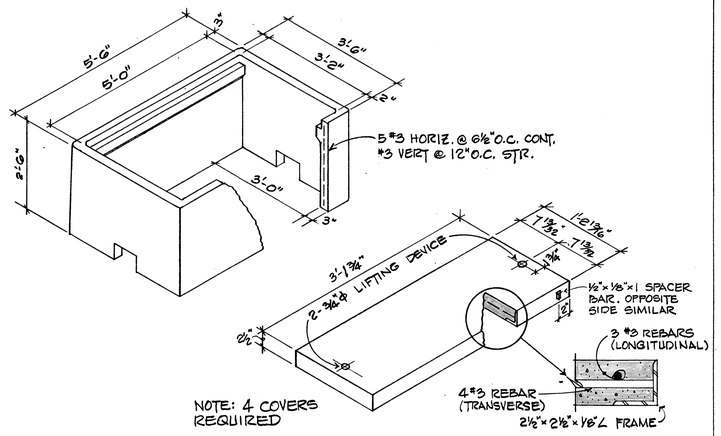

COVER

B/19 HANDHOLE DETAILS
NOT TO SCALE

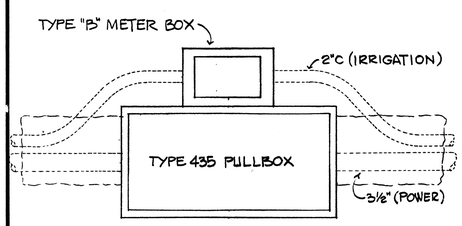

C/19 PULLBOX PLAN
NOT TO SCALE

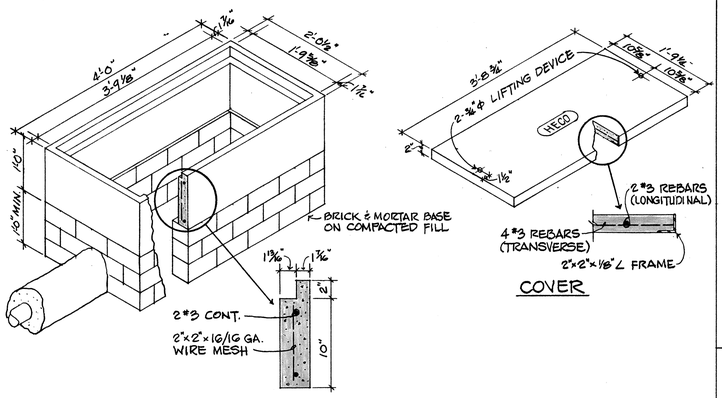

COVER

D/19 TYPE 435 PULLBOX DETAILS
NOT TO SCALE

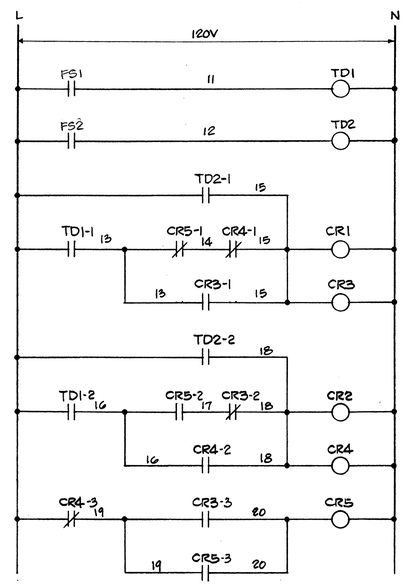

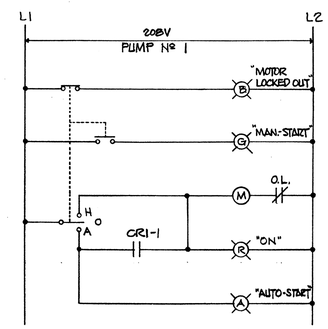

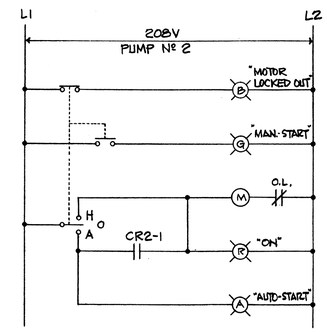

- ○ RELAY COIL
- ⊣⊢ N.O. CONTACT
- ⊣/⊢ N.C. CONTACT
- ⊗ INDICATING LIGHT
- CR CONTROL RELAY
- TD TIME DELAY RELAY (OFF DELAY)
- FS FLOW SWITCH
- OL OVERLOAD
- M MOTOR STARTING COIL
- H-O-A HAND-OFF-AUTO SELECTOR SW.
- A AMBER
- B BLUE
- G GREEN
- R RED

1. PUMP STARTING SHALL BE INITIATED BY FLOW SWITCH #1
2. PUMP #1 SHALL BE THE LEAD PUMP w/PUMP #2 PROVIDING ADDITIONAL PUMPING UPON DEMAND.
3. PUMP #2 SHALL START FIRST ONLY WHEN PUMP #1 IS THE ONLY PUMP TO RUN DURING THE PRECEDING PUMPING SEQUENCE.
4. ALL CONTROL DEVICES & STARTERS SHALL BE HOUSED IN A COMMON ENCLOSURE. PILOT LIGHTS & SELECTOR SWITCHES SHALL BE INSTALLED ON THE CABINET FRONT & CLEARLY IDENTIFIED w/LAMINATED PLASTIC LABELS.
5. CONTROL RELAYS SHALL BE 4-POLE, 300V MAGNETIC RELAYS w/CONVERTIBLE 240V CONTACTS & 120V COIL.
6. TIME DELAY RELAY SHALL BE PNEUMATIC TIMERS w/OFF DELAY, 2-N.O. & 2-N.C. CONTACTS, 120V COIL, TIMING RANGE 0.2 TO 180 SECONDS
7. INDICATING LIGHTS SHALL BE FULL VOLTAGE TYPE, 120V, w/COLORED LENS.
8. SELECTOR SWITCH SHALL BE 3-POSITION MAINTAINED w/CAMS, CONTACT BLOCKS & OPERATING KNOB.

F/19 PUMP CONTROL SCHEMATIC

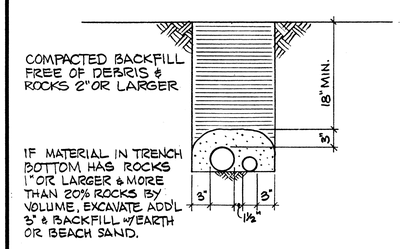

E/19 DUCTLINE SECTION
NOT TO SCALE

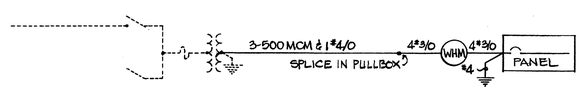

SERVICE DATA:
VOLTAGE: 120/208V, 3ϕ4W
EST. MAX. DEMAND: 40 KW
I_{sc} @ PANEL < 5,000 A

E/19 ONE LINE DIAGRAM

ORIGINAL PLAN	SURVEY PLOTTED BY	DATE
	DRAWN BY	
	TRACED BY	
NOTE BOOK	DESIGNED BY	
	QUANTITIES BY	
No.	CHECKED BY	

MELVYN S. MASUDA
REGISTERED PROFESSIONAL ENGINEER
No. 2218
HAWAII, U.S.A.

This work was prepared by me or under my supervision.

STATE OF HAWAII
DEPARTMENT OF TRANSPORTATION
HIGHWAYS DIVISION

PROJECT NO. I-H2-1(13):4

MILILANI INTERCHANGE
ELECTRICAL DETAILS

SHEET No. 19 OF 25 SHEETS

FED. ROAD DIST. NO.	STATE	FED. AID PROJ. NO.	FISCAL YEAR	SHEET NO.	TOTAL SHEETS
HAWAII	HAW.	I-H2-1(13):4	1977	29	34

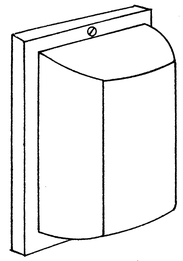

TYPE "B" FIXTURE

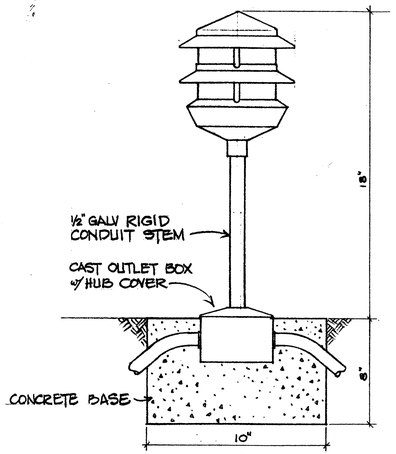

TYPE "C" FIXTURE

(A/20) LIGHTING FIXTURE DETAILS
NOT TO SCALE

PANEL SCHEDULE

120/208 VOLTS, 3-PHASE, 4-WIRE, SOLID NEUTRAL
175A MAIN BREAKER
INDUSTRIAL - BOLTED, SURFACE

CKT Nº	BREAKER POLE	BREAKER AMPS	USE: L-LTS, R-RCPT, S-SPARE PFB-PROV. FUTURE BKR	KVA ALLOWED A	B	C	WIRE SIZE
1	1	20	R	1.0			12
2			L	0.5			
3			SPRINKLER CONTROLLER		0.6		
4			PUMP CONTROL CIRCUIT		0.5		12
5			S			1.0	–
6	1	20	S			1.0	–
7	3	100	PUMP Nº 1	6.5	6.5	6.5	4
8		100	PUMP Nº 2	6.5	6.5	6.5	4
9		20	PFB	1.0	1.0	1.0	–
10	3	20	PFB	1.0	1.0	1.0	–
			TOTALS	16.5	16.1	17.0	
			KVA ALLOWED 49.6				
			DEMAND FACTOR 0.8				
			DEMAND KVA 39.7				

LIGHTING FIXTURE SCHEDULE

TYPE	LAMP DATA	DESCRIPTION
A	1-48" RS F40 CW	FLUOR STRIP, BAKED WHITE ENAMEL FINISH, 120V HPF BALLAST.
B	1-60W A-19/IF	INCAND WALL BRACKET, INJECTION-MOLDED, UV-STABILIZED, UNBREAKABLE THERMOPLASTIC LENS, GASKETED, w/STEEL BACK PLATE.
C	1-60W A-19/IF	INCAND, DIE-CAST ALUMINUM HOUSING & LOUVERS, GASKETED VAPORTIGHT GLOBE

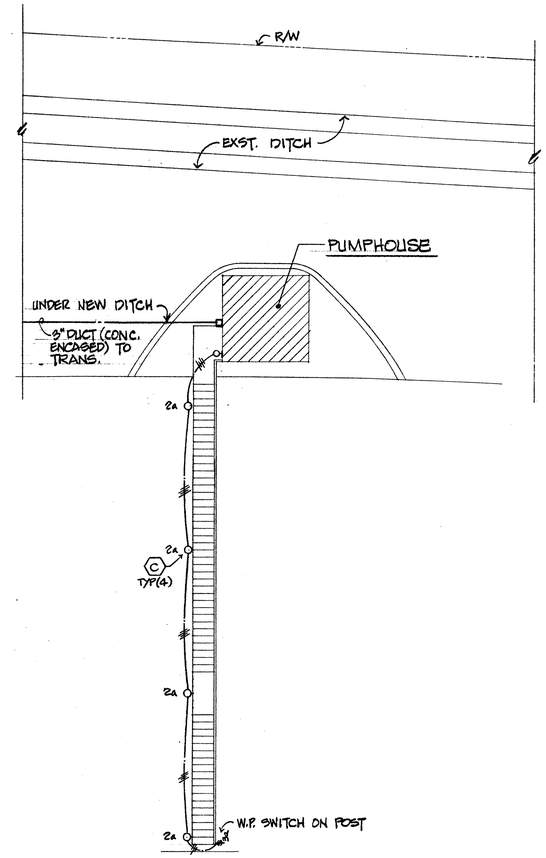

(C/20) PUMPHOUSE EXTERIOR ELECTRICAL PLAN
SCALE: 1" = 10'

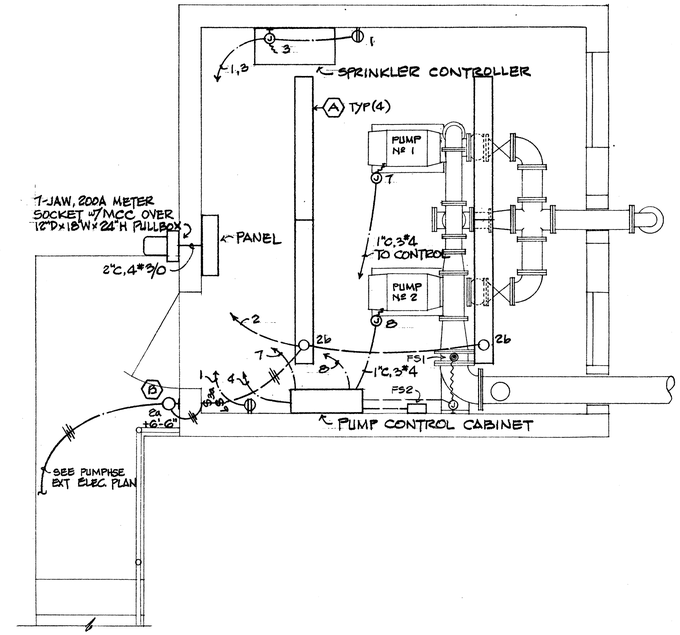

(D/20) PUMPHOUSE ELECTRICAL PLAN
SCALE: 1/2" = 1'-0"

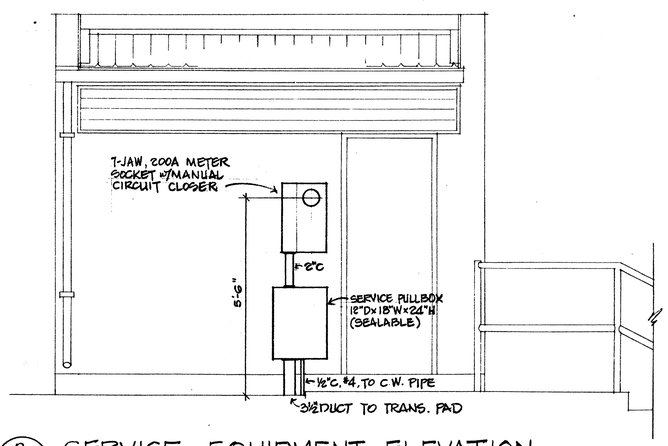

(B/20) SERVICE EQUIPMENT ELEVATION
SCALE: 1/2" = 1'-0"

ORIGINAL PLAN		DATE
	SURVEY PLOTTED BY	
	DRAWN BY	
	TRACED BY	
NOTE BOOK	DESIGNED BY	
	QUANTITIES BY	
No.	CHECKED BY	

MELVYN S. MASUDA
REGISTERED PROFESSIONAL ENGINEER
No. 2218
HAWAII, U.S.A.

This work was prepared by me or under my supervision.

STATE OF HAWAII
DEPARTMENT OF TRANSPORTATION
HIGHWAYS DIVISION

PROJECT NO. I-H2-1(13):4

MILILANI INTERCHANGE
ELECTRICAL DETAILS

SHEET No. 20 OF 25 SHEETS

SPRINKLER SUMMARY — ESTIMATED QUANTITIES

FED. ROAD DIST. NO.	STATE	FED. AID PROJ. NO.	FISCAL YEAR	SHEET NO.	TOTAL SHEETS
HAWAII	HAW.	I-H2-1(13):4	1977	30	34

ITEM NO.	206.	616.	616.	616.	616.	616.	616.	616.	616.	616.	616.	616.	616.	616.	616.	616.	616.	616.	616.	616.	616.	616.	616.	616.	616.	616.	616.	616.	616.	616.	616.	616.	616.	616.	616.	616.	616.
	03	122	124	125	127	128	129	271	272	273	277	278	279	280	281	283	284	285	286	287	289	290	291	292	293	630	631	632		751	761	842	1174	1175	1176	1177	1170	1171
UNIT USED	C.Y.	L.F.	L.F.	L.F.	L.F.	L.F.	L.F.	EA.	EA.	EA.	EA.	EA.	EA.	EA.	EA.	EA.	EA.	EA.	EA.	EA.	EA.	EA.	EA.	EA.	EA.	EA.	EA.	EA.		EA.	EA.	EA.	EA.	EA.	EA.	EA.	EA.	EA.
SYSTEM NO.	TRENCH EXCAVATION	1" PVC PIPE	1.5" PVC PIPE	2" PVC PIPE	3" PVC PIPE	4" PVC PIPE	6" PVC PIPE	S12 HEAD	S13 HEAD	S14 HEAD	S22 HEAD	S23 HEAD	S24 HEAD	S25 HEAD	S26 HEAD	P12 HEAD	P13 HEAD	P14 HEAD	P15 HEAD	P16 HEAD	P22 HEAD	P23 HEAD	P24 HEAD	P25 HEAD	P26 HEAD	1" AUTO. VLV.	1.5" AUTO. VLV.	2" AUTO. VLV.		1" AIR RELEASE VLV.	6" BACKFLOW PREV.	CONTROLLER (FIELD)	1" GATE VALVE	1.5" GATE VLV.	2" GATE VALVE	3" GATE VALVE	4" GATE VALVE	6" GATE VALVE
M1D4	6.2	215								8																1							2					
M1E4	14.8	210	275	10																		17					1							2				
M1G4	13.8	240	215	10																		16					1							2				
M1H4	13.8	240	215	10																		16					1							2				
M1I4	13.8	240	215	10																		16					1							2				
M2B3	19.6	60	510	60	10																	22					1							2				
M2D3	19.6	60	510	60	10																	22					1							2				
M2F3	19.6	60	510	60	10																	22					1							2				
M2G4	22.7	120	375	230	10																	25						1							2			
M2I5	8.5	60	220																			10				1							2					
M3B4	15.8	180	335	10																		18					1							2				
M3C4	12.9	240	185	10																		15					1							2				
M3E3	6.6	60	160									8														1							2					
M3E4	12.0	240	155	10																		14				1							2					
M3E5	8.2	283													11											1							2					
M3F3	9.0	206	100						4			7														1							2					
M3F4	14.8	180	305	10																		17					1							2				
M3F5A	0.5	157	99		219									18													1							2				
M3F5B	8.5	60	220									10														1							2					
M3F5C	10.6	60	195	90								11														1							2					
M3G5A	10.9	165	215	10	232												3					11				1							2					
M3G5B	9.5	60	195	55								11														1							2					
M3H3	12.1		240	150				10																			1							2				
M3H4	12.0	240	155	10																		14				1							2					
M3H5	61.6	160	273	10	230											3					9						1							2				
M3I4	13.9	180	275	10																		16					1							2				
M3I5	3.7	130											7													1							2					
M3J5A	60.4	240	227	35	10	215										9					5						1							2				
M3J5B	3.8	90	40											9												1							2					
M4A7	13.1	240	170	30					15																		1							2				
M4A8	4.9	170																							7	1							2					
M4B8	12.9	270	169																				14			1							2					
TOTAL	488	5116	6758	890	731	215		10	19	8		47	7	27	11	12	3				14	271	14		7	15	16	1					30	32	2			

REMARKS:

EXPLANATION OF SYSTEM NO. DESIGNATIONS

W2.B3.A

- INTERCHANGE SYMBOL: W - WAHIAWA, L - LEILEHUA, M - MILILANI
- SHEET
- AREA NO.
- GRID ZONE COORDINATES
- DESIGNATION USED WHEN MORE THAN ONE SYSTEM IN GRID ZONE.

Date	Revision
11-8-76	Revision to sprinkler Head Quantities

This work was prepared by me or under my supervision.

STATE OF HAWAII
DEPARTMENT OF TRANSPORTATION
HIGHWAYS DIVISION

PROJECT NO. I-H2-1(13):4

MILILANI INTERCHANGE

SPRINKLER SUMMARY

SHEET No. 21 OF 25 SHEETS

ADD 30

ORIGINAL PLAN | NOTE BOOK No. | SURVEY PLOTTED BY | DRAWN BY | TRACED BY | DESIGNED BY | QUANTITIES BY | CHECKED BY | DATE

K+E CRYSTALENE ENGINE PAPER

SPRINKLER SUMMARY — ESTIMATED QUANTITIES

FED. ROAD DIST. NO.	STATE	FED. AID PROJ. NO.	FISCAL YEAR	SHEET NO.	TOTAL SHEETS
HAWAII	HAW.	I-H2-1(13):4	1977	31	34

ITEM NO.	206.	616.	616.	616.	616.	616.	616.	616.	616.	616.	616.	616.	616.	616.	616.	616.	616.	616.	616.	616.	616.	616.	616.	616.	616.	616.	616.	616.	616.	616.	616.	616.	616.	616.	616.	616.	616.
	03	122	124	125	127	128	129	271	272	273	277	278	279	280	281	283	284	285	286	287	289	290	291	292	293	630	631	632		751	761	842	1174	1175	1176	1177	1170	1171
UNIT USED	C.Y.	L.F.	L.F.	L.F.	L.F.	L.F.	L.F.	EA.	EA.	EA.	EA.	EA.	EA.	EA.	EA.	EA.	EA.	EA.	EA.	EA.	EA.	EA.	EA.	EA.	EA.	EA.	EA.	EA.		EA.	EA.	EA.	EA.	EA.	EA.	EA.	EA.	EA.
SYSTEM NO.	TRENCH EXCAVATION	1" PVC PIPE	1.5" PVC PIPE	2" PVC PIPE	3" PVC PIPE	4" PVC PIPE	6" PVC PIPE	S12 HEAD	S13 HEAD	S14 HEAD	S22 HEAD	S23 HEAD	S24 HEAD	S25 HEAD	S26 HEAD	P12 HEAD	P13 HEAD	P14 HEAD	P15 HEAD	P16 HEAD	P22 HEAD	P23 HEAD	P24 HEAD	P25 HEAD	P26 HEAD	1" AUTO. VLV.	1.5" AUTO. VLV.	2" AUTO. VLV.		1" AIR RELEASE VLV.	6" BACKFLOW PREV.	CONTROLLER (FIELD)	1" GATE VALVE	1.5" GATE VLV.	2" GATE VALVE	3" GATE VALVE	4" GATE VALVE	6" GATE VALVE
M4C7	13.1	240	170	30					15																		1							2				
M4C8	18.4	120	220	90	150																11						1							2				
M4D6	5.5	120	67						6																	1							2					
M4D7	42.0	160	235	55	135											8					6						1							2				
M4E6	9.7	140	175	10				3			6																1							2				
M4E7	50.7	240	157	85	173											8					4						1							2				
M4F2	13.7	60	390									8														1						2						
M4F3	6.5	120	100									8														1						2						
M4F5A	13.0	210	217	10					6			9															1							2				
M4F5B	3.9	134																		8					4	1						2						
M4F6A	3.0	105																							6	1						2						
M4F6B	9.6	180	145														2					6				1						2						
M4F6C	65.6	240	200	35	100	228										6					7						1							2				
M4F7	33.0	160	235	35		36					9					2											1							2				
M4G1	13.7	60	390									8														1						2						
M4G2	12.8	200	230																				11			1						2						
M4G3A	13.1	230	210																				11			1						2						
M4G3B	12.9	210	215	10					4			11															1						2					
M4G4	5.2	180																		5					6	1						2						
M4G5A	6.6	230																					12			1						2						
M4G5B	6.2	120	90													4					2					1						2						
M4H5	10.7	160	225	100												2					10						1						2					
M4H6	13.8	160	270	30												5					7						1						2					
M4H7	16.0	160	275	15		12					12																1						2					
M4I5A	18.2	160	180	220	30			2			13																	1							2			
M4I5B	9.5	150	170																					11		1						2						
M4I6A	10.9	160	195	10		8										5					5						1						2					
M4I6B	61.0	160	230	20		232					11																1						2					
M5A3	3.3	105	10											8												1						2						
M5B1	7.5	60	190																			9				1						2						
M5B2	55.2	240	205	45	20	190										9					4							1						2				
M5B3	16.2	80	360	80	10			4			10																	1						2				
M5C2	15.9	160	280	20		10										12												1						2				
M5C3	54.1	160	280	20		192										6					6							1						2				
M5D1	16.7	150	395	10																		19					1						2					
TOTAL	667	5524	6771	930	618	908		9	31		61	44		8		67	2			13	62	34	34	11	16	15	15	5					30	30	10								

REMARKS:

EXPLANATION OF SYSTEM NO. DESIGNATIONS

W2.B3.A

- INTERCHANGE SYMBOL: W - WAHIAWA, L - LEILEHUA, M - MILILANI
- SHEET
- AREA NO.
- GRID ZONE COORDINATES
- DESIGNATION USED WHEN MORE THAN ONE SYSTEM IN GRID ZONE.

Date	Revision
11-8-76	Revision to Sprinkler Head Quantities

This work was prepared by me or under my supervision.

STATE OF HAWAII
DEPARTMENT OF TRANSPORTATION
HIGHWAYS DIVISION

PROJECT NO. I-H2-1(13):4

MILILANI INTERCHANGE

SPRINKLER SUMMARY

SHEET No. 22 OF 25 SHEETS

ADD 31

ORIGINAL PLAN | SURVEY PLOTTED BY | DRAWN BY | TRACED BY | DESIGNED BY | QUANTITIES BY | CHECKED BY | NOTE BOOK | No. | DATE

SPRINKLER SUMMARY — ESTIMATED QUANTITIES

FED. ROAD DIST. NO.	STATE	FED. AID PROJ. NO.	FISCAL YEAR	SHEET NO.	TOTAL SHEETS
HAWAII	HAW.	I-H2-1(13):4	1977	32	34

ITEM NO.	206. 03	616. 122	616. 124	616. 125	616. 127	616. 128	616. 129	616. 271	616. 272	616. 273	616. 277	616. 278	616. 279	616. 280	616. 281	616. 283	616. 284	616. 285	616. 286	616. 287	616. 289	616. 290	616. 291	616. 292	616. 293	616. 630	616. 631	616. 632		616. 751	616. 761	616. 842	616. 1174	616. 1175	616. 1176	616. 1177	616. 1170	616. 1171
UNIT USED	C.Y.	L.F.	L.F.	L.F.	L.F.	L.F.	L.F.	EA.	EA.	EA.	EA.	EA.	EA.	EA.	EA.	EA.	EA.	EA.	EA.	EA.	EA.	EA.	EA.	EA.	EA.	EA.	EA.	EA.		EA.	EA.	EA.	EA.	EA.	EA.	EA.	EA.	EA.
SYSTEM NO.	TRENCH EXCAVATION	1" PVC PIPE	1.5" PVC PIPE	2" PVC PIPE	3" PVC PIPE	4" PVC PIPE	6" PVC PIPE	S12 HEAD	S13 HEAD	S14 HEAD	S22 HEAD	S23 HEAD	S24 HEAD	S25 HEAD	S26 HEAD	P12 HEAD	P13 HEAD	P14 HEAD	P15 HEAD	P16 HEAD	P22 HEAD	P23 HEAD	P24 HEAD	P25 HEAD	P26 HEAD	1" AUTO. VLV.	1.5" AUTO. VLV.	2" AUTO. VLV.		1" AIR RELEASE VLV.	6" BACKFLOW PREV.	CONTROLLER (FIELD)	1" GATE VALVE	1.5" GATE VLV.	2" GATE VALVE	3" GATE VALVE	4" GATE VALVE	6" GATE VALVE
M5D2	14.5	160	200	20		15										10											1							2				
M5D3	60.5	160	200	20			185									5					5						1							2				
M5D4	16.2	80	360	80	10			7			7																	1							2			
M5E1	14.9	210	195	90																		16		2			1							2				
M5E2	91.8	160	200	20		303					4					6											1							2				
M5E3	19.1	240	275	35	20	7										8					7							1							2			
M5E4A	7.3	125	120											9												1							2					
M5E4B	15.9	360	107	72					8			10															1							2				
M5E5A	18.8	160	180	260	10			4			12																	1							2			
M5E5B	4.9	170																		5					3	1							2					
M5E7	13.9	90	370									7														1							2					
M5F4	5.5	190																					10			1							2					
M5F5A	5.0	82	87																4					3		1							2					
M5F5B	16.0	120	400	10					6			12															1							2				
M5F6	11.7	190		195																			10			1							2					
M5F7A	11.9	200	200																				11			1							2					
M5F7B	14.3	60	410									9															1							2				
M5G1	14.9	210	195	90																		16		2			1							2				
M5G2	16.8	240	275	35	10						5					9					1							1							2			
M5G3	29.4	240	280	40	120	40										8					7							1							2			
M5G4A	15.5	360	100	65													6					12					1							2				
M5G4B	9.8	340																							13	1							2					
M5H2	28.3	240	275	35	73											15												1							2			
M5H3	48.7	160	180	125		165										5					7							1							2			
M5H4	17.4	120	445	10					10			10															1							2				
M5I1	12.9	240	185	10																		15					1							2				
M5I2	40.3	240	280	35	205											11					5							1							2			
M5I3	16.0	120	400	10					4			14															1							2				
M6A4	16.5	160	240	10	20											5					6						1							2				
M6B3	13.6	140	160	147				4			8																1							2				
M6B4	57.8	160	275	10	212											6					6						1							2				
M6B5	12.9	210	215	10																		15					1							2				
M6B6	87.1	150	315	55	340												5					13					1							2				
M6B7	7.1	120	120						8																	1							2					
M6C4	53.9	240	237		260											5					9							1							2			
TOTAL	841	6447	7481	1489	1370	530	185	15	36		36	62		9		93	11		4	5	53	87	31	7	16	9	17	9					18	34	18			

REMARKS:

EXPLANATION OF SYSTEM NO. DESIGNATIONS

W2B3A

- INTERCHANGE SYMBOL: W - WAHIAWA, L - LEILEHUA, M - MILILANI
- SHEET
- DESIGNATION USED WHEN MORE THAN ONE SYSTEM IN GRID ZONE.
- GRID ZONE COORDINATES
- AREA NO.

Date	Revision
11-8-76	Revision to Sprinkler Head Quantities

This work was prepared by me or under my supervision.

STATE OF HAWAII
DEPARTMENT OF TRANSPORTATION
HIGHWAYS DIVISION

PROJECT NO. I-H2-1(13):4

MILILANI INTERCHANGE

SPRINKLER SUMMARY

SHEET No. 23 OF 25 SHEETS

ADD 32

ORIGINAL PLAN | SURVEY PLOTTED BY | DRAWN BY | TRACED BY | DESIGNED BY | QUANTITIES BY | CHECKED BY | NOTE BOOK | No. | DATE

SPRINKLER SUMMARY — ESTIMATED QUANTITIES

FED. ROAD DIST. NO.	STATE	FED. AID PROJ. NO.	FISCAL YEAR	SHEET NO.	TOTAL SHEETS
HAWAII	HAW.	I-H2-1(13):4	1977	33	34

ITEM NO.	206.03	616.122	616.124	616.125	616.127	616.128	616.129	616.271	616.272	616.273	616.277	616.278	616.279	616.280	616.281	616.283	616.284	616.285	616.286	616.287	616.289	616.290	616.291	616.292	616.293	616.630	616.631	616.632	6	616.751	616.761	616.842	616.1174	616.1175	616.1176	616.1177	616.1170	616.1171	616.450	616.451	616.452	616.453	616.454	616.455	616.456	616.457	616.458
UNIT USED	C.Y.	L.F.	L.F.	L.F.	L.F.	L.F.	L.F.	EA.	EA.	EA.	EA.	EA.	EA.	EA.	EA.	EA.	EA.	EA.	EA.	EA.	EA.	EA.	EA.	EA.	EA.	EA.	EA.	EA.		EA.	EA.	EA.	EA.	EA.	EA.	EA.	EA.	EA.	L.F.	EA.	L.S.	L.S.	EA.	EA.	EA.	EA.	EA.
SYSTEM NO.	TRENCH EXCAVATION	1" PVC PIPE	1.5" PVC PIPE	2" PVC PIPE	3" PVC PIPE	4" PVC PIPE	6" PVC PIPE	S12 HEAD	S13 HEAD	S14 HEAD	S22 HEAD	S23 HEAD	S24 HEAD	S25 HEAD	S26 HEAD	P12 HEAD	P13 HEAD	P14 HEAD	P15 HEAD	P16 HEAD	P22 HEAD	P23 HEAD	P24 HEAD	P25 HEAD	P26 HEAD	1" AUTO. VLV.	1.5" AUTO. VLV.	2" AUTO. VLV.		1" AIR RELEASE VLV.	6" BACKFLOW PREV.	CONTROLLER (FIELD)	1" GATE VALVE	1.5" GATE VLV.	2" GATE VALVE	3" GATE VALVE	4" GATE VALVE	6" GATE VALVE	8" PVC PIPE	20 HP PUMP	PUMP APPURTENC	PUMP BUILDING	4" BACKFLOW PREV.	FLOW MEASURG EL.	3" CHECK VALVE	3" PRESS. RELIEF	6" CHECK VALVE
MGC5	12.0	240	155	10																		14				1							2														
MGC6	15.9	160	160	155	40			7			6																	1							2												
MGD3	18.1	180	264	150					11			9															1							2													
MGD4	57.8	160	255	10	215																11						1							2													
MGD5	12.9	240	185	10																		15					1							2													
MGD6	64.4	120	227	10	256																			24			1							2													
MGE4	12.6	234	192																				12			1							2														
MGE5A	9.0	120	182																						14	1							2														
MGE5B	8.7	120	170																						14	1							2														
MGE6	15.3	210	270	30					8			9															1							2													
MGF3	17.0	160	200	150	40			6			8																	1							2												
MGF4	5.9	205																							8	1							2														
MGF5	12.0	240	155	10																		14				1							2														
MGG3	14.4	160	180	135				7			5																	1							2												
MGG5	9.5	60	195	55																		11				1							2														
MGG6	14.5	240	210	35					8			8															1							2													
MGH6	21.5	240	300	125	40			6			6																	1							2												
MGI3	18.8	160	140	265	40			9			6																	1							2												
MGI4	17.7	120	455	10																		20					1							2													
MGI5	14.2	160	270	40				6			6																	1							2												
M7A5	18.2	240	280	35	45			10			5																	1							2												
M7B3	15.2	200	140	150	10			8			5																	1							2												
M7B4	17.7	120	455	10																		20					1							2													
M7C4	13.7	195	180	80																		16					1							2													
M7E4	11.3	382	10																				20			1							2														
M7F4	10.1	340	10																				18			1							2														
M7G4	12.5	30	157	212																				15			1							2													
PUMP EQUIP.	34						50																							1						3	4		70	2	L.S.	L.S.	1	1	3	1	
BIFURCATED MAIN	281						1040																													1		1								1	1
TOTAL	786	5036	5397	1687	686		1090	59	27		47	26									11	110	50	39	36	9	10	8		1			18	20	16	4	4	1	70	2	L.S.	L.S.	1	1	3	2	1

REMARKS:

EXPLANATION OF SYSTEM NO. DESIGNATIONS

W2.B3.A

- INTERCHANGE SYMBOL: W - WAHIAWA, L - LEILEHUA, M - MILILANI
- SHEET
- DESIGNATION USED WHEN MORE THAN ONE SYSTEM IN GRID ZONE.
- GRID ZONE COORDINATES
- AREA NO.

Date	Revision
11-8-76	Revision to sprinkler Head Quantities

This work was prepared by me or under my supervision.

STATE OF HAWAII
DEPARTMENT OF TRANSPORTATION
HIGHWAYS DIVISION

PROJECT NO. I-H2-1(13):4

MILILANI INTERCHANGE

SPRINKLER SUMMARY

SHEET No. 24 OF 25 SHEETS

ADD 33

ORIGINAL PLAN | SURVEY PLOTTED BY | SURVEY CHECKED BY | TRACED BY | DESIGNED BY | QUANTITIES BY | CHECKED BY | NOTE BOOK No. | DATE

SPRINKLER SUMMARY — ESTIMATED QUANTITIES

FED. ROAD DIST. NO.	STATE	FED. AID PROJ. NO.	FISCAL YEAR	SHEET NO.	TOTAL SHEETS
HAWAII	HAW.	I-H2-1(13):4	1977	34	34

ITEM NO.	206.	616.	616.	616.	616.	616.	616.	616.	616.	616.	616.	616.	616.	616.	616.	616.	616.	616.	616.	616.	616.	616.	616.	616.	616.	616.	616.		616.	616.	616.	616.	616.	616.	616.	616.	616.	616.	616.	616.	616.	616.	616.	616.
	03	122	124	125	127	128	129	271	272	273	277	278	279	280	281	283	284	285	286	287	289	290	291	292	468	630	631	632		751	761	842	1174	1175	1176	1177	1170	1171	455	460	461	462	450	1172	841	464	465
UNIT USED	C.Y.	L.F.	L.F.	L.F.	L.F.	L.F.	L.F.	EA.	EA.	EA.	EA.	EA.	EA.	EA.	EA.	EA.	EA.	EA.	EA.	EA.	EA.	EA.	EA.	EA.	EA.	EA.	EA.	EA.		EA.	EA.	EA.	EA.	EA.	EA.	EA.	EA.	EA.	FT.	EA.	EA.	EA.	FT.	EA.	EA.	L.F.	L.S.
SYSTEM NO.	TRENCH EXCAVATION	1" PVC PIPE	1.5" PVC PIPE	2" PVC PIPE	3" PVC PIPE	4" PVC PIPE	6" PVC PIPE	S12 HEAD	S13 HEAD	S14 HEAD	S22 HEAD	S23 HEAD	S24 HEAD	S25 HEAD	S26 HEAD	P12 HEAD	P13 HEAD	P14 HEAD	P15 HEAD	P16 HEAD	P22 HEAD	P23 HEAD	P24 HEAD	P25 HEAD	A.V. APPURT'S	1" AUTO. VLV.	1.5" AUTO. VLV.	2" AUTO. VLV.	[illegible]	1" AIR RELEASE VLV.	6" BACKFLOW PREV.	CONTROLLER (FIELD)	1" GATE VALVE	1.5" GATE VLV.	2" GATE VALVE	3" GATE VALVE	4" GATE VALVE	6" GATE VALVE	½" PVC TUBING	VORTEX EMITTER	DRIP VALVE ASSEMBLY	HOSE BIBB	8" PVC PIPE	8" GATE VALVE	CENTRAL PROGRAMMER	CONTROL WIRE	ELECTRICAL WORK
MAIN "A"	940				5685	1175	300																							2						2		2					1050	1			
MAIN "B"	1220				2295	5200																								1						2	2										
MAIN "C"	561				7100	780																								2						3	1										
MAIN "D"	228						845																							1								2									
DM1F3	46																																						2300	40	1	4					
DM1F4	32																																						1600	33	1	2					
DM2H4	40																																						2000	27	1	2					
DM4D6	65																																						3250	51	1	4					
DM4H6	50																																						2500	47	1	3					
DM5B3	67																																						3325	40	1	2					
DM5G3	57																																						2850	43	1	3					
DM5J3	54																																						2700	43	1	2					
DM6F3	73																																						3625	58	1	4					
DM7C3	40	100																																					1825	34	1	2					
DM7C5	39	100																																					1800	39	1	2					
CONTROLLER (FIELD)																																13															
CENTRAL PROGRAMMER																																													1		
CONTROL WIRE																																														139,000	
ELECTRICAL WORK																																															L.S.
A.V. APPURT'S																									133																						
TOTAL	3512	200			15090	7155	1145																		133					6		13				7	3	4	27,775	455	11	30	1050	1	1	139,000	L.S.

REMARKS:

EXPLANATION OF SYSTEM NO. DESIGNATIONS

DESIGNATES DRIP SYS.

D W 2 B 3 A

- INTERCHANGE SYMBOL: W - WAHIAWA, L - LEILEHUA, M - MILILANI
- SHEET
- DESIGNATION USED WHEN MORE THAN ONE SYSTEM IN GRID ZONE.
- GRID ZONE COORDINATES
- AREA NO.

ORIGINAL PLAN | SURVEY PLOTTED BY | DRAWN BY | TRACED BY | DESIGNED BY | QUANTITIES BY | CHECKED BY | DATE | NOTE BOOK | No.

This work was prepared by me or under my supervision.

STATE OF HAWAII
DEPARTMENT OF TRANSPORTATION
HIGHWAYS DIVISION

PROJECT NO. I-H2-1(13):4

MILILANI INTERCHANGE

SPRINKLER SUMMARY

SHEET No. 25 OF 25 SHEETS