FED. ROAD DIST. NO.	STATE	FEDERAL AID PROJ. NO.	FISCAL YEAR	SHEET NO.	TOTAL SHEETS
HAWAII	HAW.	IM-0300(117)	2009	21	42

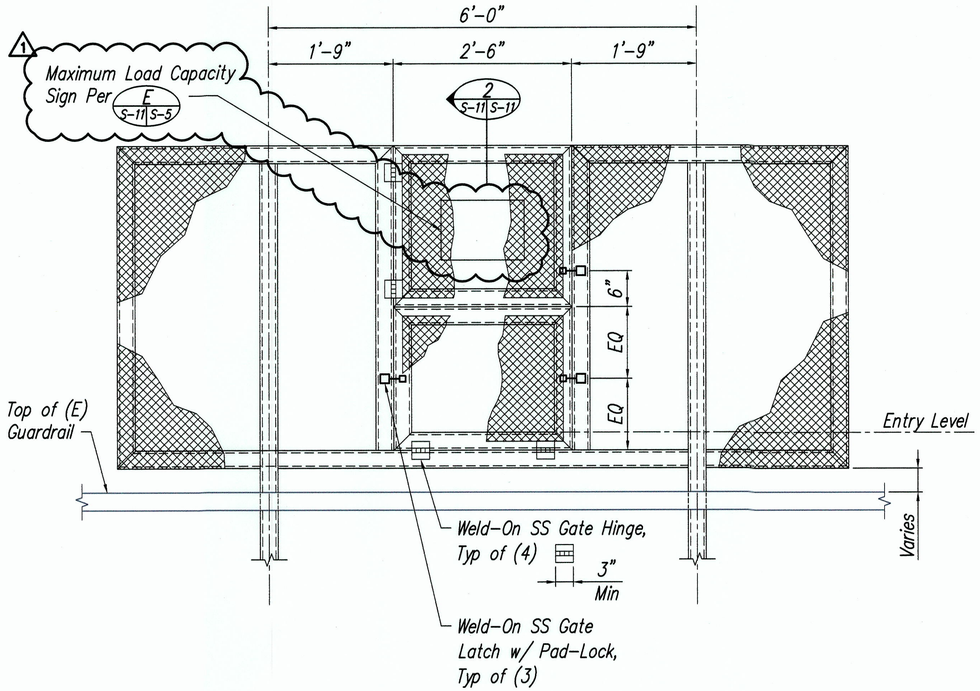

1 PARTIAL ELEVATION AT DOOR AND PLATFORM
S-6,S-10 S-11 SCALE: 1" = 1'-0"

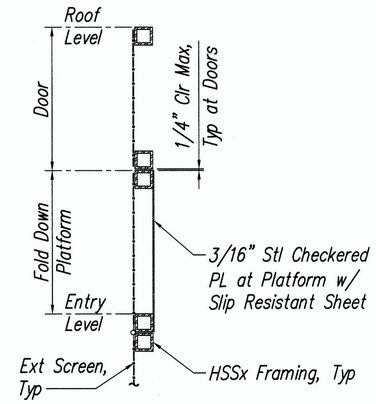

Closed Position

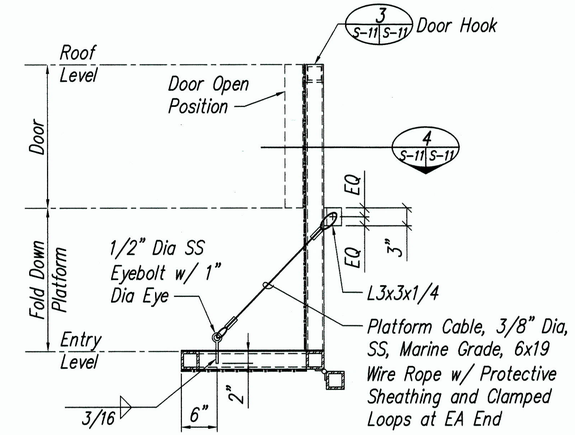

Open Position

2 SECTION AT ACCESS PLATFORM DOORS
S-6,S-10,S-11 S-11 SCALE: 1" = 1'-0"

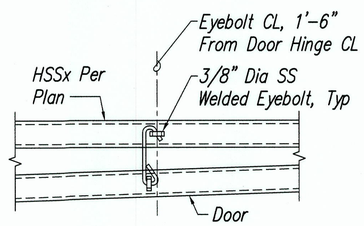

3 DETAIL
S-11 S-11 SCALE: 1 1/2" = 1'-0"

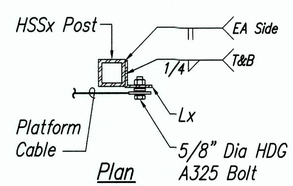

4 DETAIL
S-11 S-11 SCALE: 1 1/2" = 1'-0"

GRAPHIC SCALES:

0 1' 2' 3'
1"=1'-0"

0 1' 2'
1-1/2"=1'-0"

DATE	REVISION
1 05/13/13	Added Signage

STATE OF HAWAII
DEPARTMENT OF TRANSPORTATION
HIGHWAYS DIVISION

DETAILS

FREEWAY MANAGEMENT SYSTEM, PHASE 1B
TRAVELER INFORMATION SYSTEM, UNIT 4B:
DYNAMIC MESSAGE SIGN INSTALLATION –
FEDERAL AID PROJECT NO. IM-0300(117)

SCALE: AS NOTED DATE: 7-14-09

NORMAN K. NAGAMINE LICENSED PROFESSIONAL ENGINEER NO. 5479-S HAWAII, U.S.A.

Norman K. Nagamine
THIS WORK WAS PREPARED BY ME OR UNDER MY SUPERVISION

SHEET No. S-11 OF 11 SHEETS

"AS-BUILT"