FED. ROAD DIST. NO.	STATE	FEDERAL AID PROJ. NO.	FISCAL YEAR	SHEET NO.	TOTAL SHEETS
HAWAII	HAW.	NH-HI-1(246)	2004	69	105

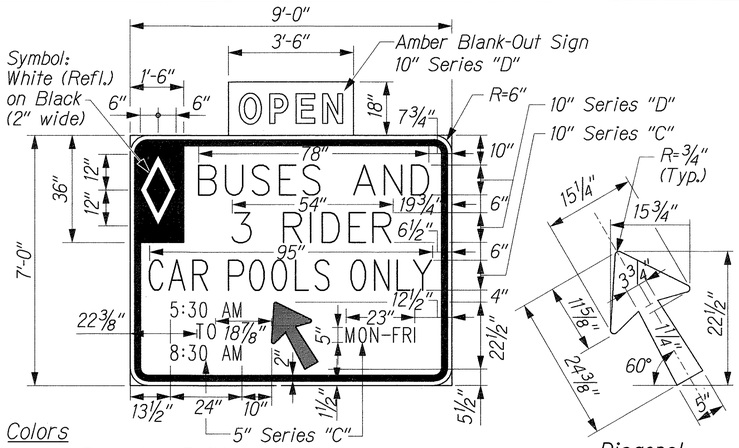

Colors
Legend: Black (Non-Refl.)
Background: White (Refl.)
Border: Black

R-7

Diagonal Arrow Detail
Not to Scale

Note:
* Optically space numerals about vertical centerline.
** Increase spacing 100%.

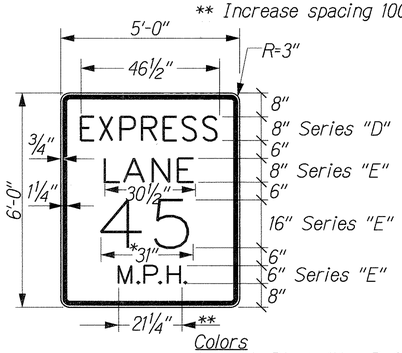

Colors
Legend: Black (Non-Refl.)
Background: White (Refl.)
Border: Black

R-8

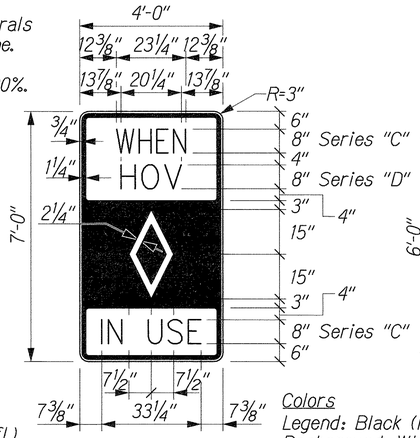

Colors
Legend: Black (Non-Refl.)
Background: White (Refl.)
Symbol: (Refl. White on Black)

R3-12b

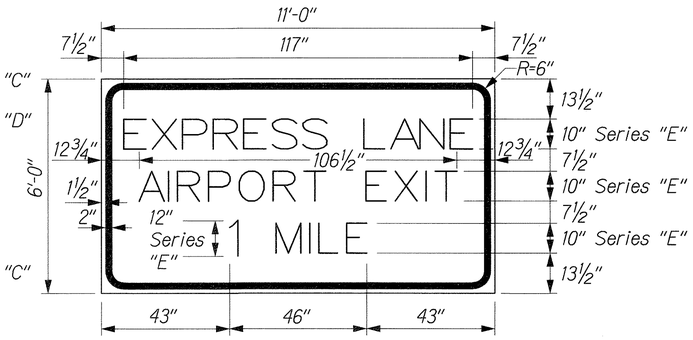

Colors
Legend: Black (Non-Refl.)
Background: Yellow (Refl.)
Border: Black

WS-1

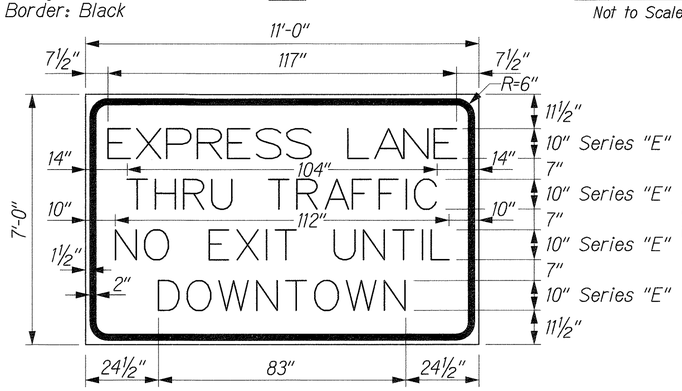

WS-2

Colors
Legend: Black (Non-Refl.)
Background: Yellow (Refl.)
Border: Black

WS-3

Colors
Legend: Black (Non-Refl.)
Background: Yellow (Refl.)
Border: Black

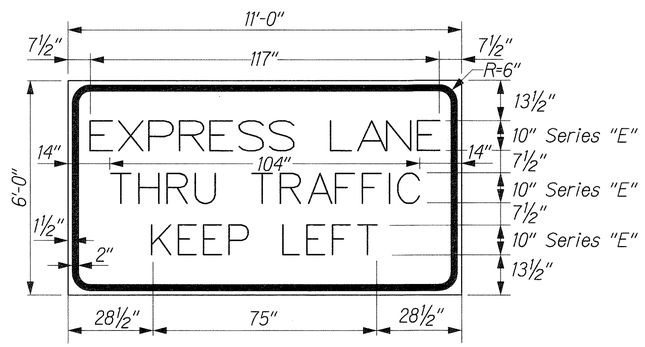

WS-4

Colors
Legend: Black (Non-Refl.)
Background: Yellow (Refl.)
Border: Black

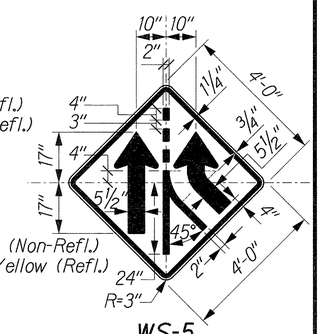

Colors
Legend: Black (Non-Refl.)
Background: Yellow (Refl.)

WS-5

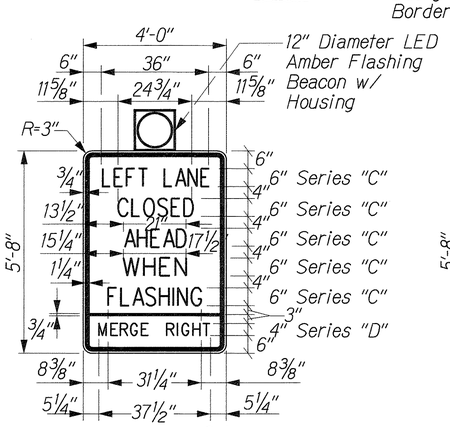

WS-6a

Colors
Legend: Black (Non-Refl.)
Background: White (Refl.)
Border: Black

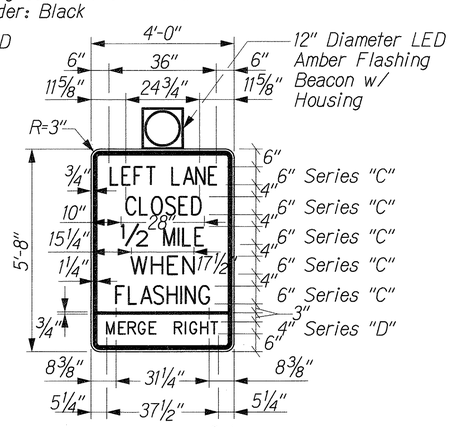

WS-6b

Colors
Legend: Black (Non-Refl.)
Background: White (Refl.)
Border: Black

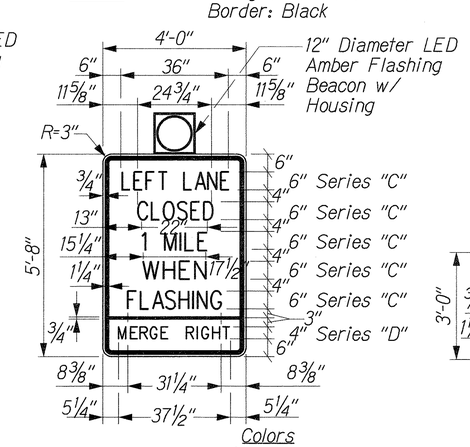

WS-6c

Colors
Legend: Black (Non-Refl.)
Background: White (Refl.)
Border: Black

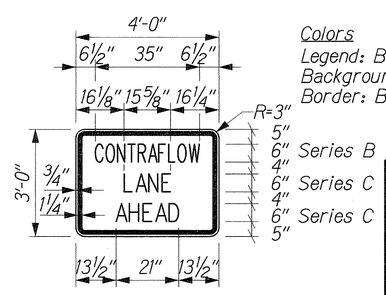

WS-7

Colors
Legend: Black (Non-Refl.)
Background: Yellow (Refl.)
Border: Black

PERRY M. SMALL
LICENSED PROFESSIONAL ENGINEER
No. 8627-C
HAWAII, U.S.A.

THIS WORK WAS PREPARED BY ME OR UNDER MY SUPERVISION.

STATE OF HAWAII
DEPARTMENT OF TRANSPORTATION
HIGHWAYS DIVISION

SIGN PANEL LAYOUT DETAILS

INTERSTATE ROUTE H-1 ZIPPER LANE EXTENSION
RADFORD DRIVE OVERPASS TO KEEHI INTERCHANGE
FEDERAL AID PROJECT NO. NH-HI-1(246)

Scale: None — Date: Mar. 2, 2004

SHEET No. P16 OF 19 SHEETS

ORIGINAL PLAN — SURVEY PLOTTED BY — DRAWN BY — TRACED BY — DESIGNED BY — QUANTITIES BY — CHECKED BY — DATE — NOTE BOOK — No.

J:/ZIPPER EXTENSION/SIGN/SIGNDET1.dgn