FED. ROAD DIST. NO.	STATE	FED. AID PROJ. NO.	FISCAL YEAR	SHEET NO.	TOTAL SHEETS
HAWAII	HAW.	IM-H1-1(240)	2004	11	143

INDEX TO DRAWINGS

SHEET NO.	DESCRIPTION
S0.1	INDEX TO DRAWINGS
S0.2	INDEX TO DRAWINGS, ESTIMATED QUANTITIES
S0.3	GENERAL NOTES
S0.4	SYMBOLS AND ABBREVIATIONS
S1.1	PARTIAL LAYOUT PLAN – AIRPORT VIADUCT
S2.1	PLANS AND SECTION – AIRPORT VIADUCT
S2.2	SECTION – AIRPORT VIADUCT
S2.3	PLAN AND SECTION – AIRPORT VIADUCT
S2.4	DETAIL AND SECTION – AIRPORT VIADUCT
S3.1	DECK LAYOUT & ELEVATION – AIRPORT INTERCHANGE
S3.2	PARTIAL DECK FRAMING PLAN – AIRPORT INTERCHANGE
S3.3	SECTION – AIRPORT INTERCHANGE
S3.4	DECK STEEL PLACEMENT DIAG. – AIRPORT INTERCHANGE
S3.5	SECTION – AIRPORT INTERCHANGE
S3.6	SECTIONS – AIRPORT INTERCHANGE
S3.7	DETAIL PLAN AND ELEVATION – AIRPORT INTERCHANGE
S3.8	SECTIONS – AIRPORT INTERCHANGE
S4.1	PLAN AND SECTION – AIRPORT VIADUCT
S4.2	DECK FRAMING PLANS – AIRPORT VIADUCT
S4.3	SECTION – AIRPORT VIADUCT
S4.4	PARTIAL REINFORCING PLANS – AIRPORT VIADUCT
S4.5	SECTION – AIRPORT VIADUCT
S4.6	SECTION – AIRPORT VIADUCT
S4.7	SECTIONS – AIRPORT VIADUCT
S4.8	DETAILS – AIRPORT VIADUCT
S4.9	ELEVATION AND SECTION – AIRPORT VIADUCT
S5.1	PARTIAL DECK PLAN – AIRPORT INTERCHANGE
S5.2	PARTIAL LONG. SECTION – AIRPORT INTERCHANGE
S5.3	DECK FRAMING PLAN – AIRPORT INTERCHANGE
S5.4	SECTIONS AND DETAILS – AIRPORT INTERCHANGE
S5.5	SECTION – AIRPORT INTERCHANGE
S5.6	PLAN, SECTIONS, AND DETAIL – AIRPORT INTERCHANGE
S6.1	PARTIAL DECK LAYOUT PLAN – AIRPORT VIADUCT
S6.2	LONGITUDINAL SECTION – AIRPORT VIADUCT
S6.3	PARTIAL DECK FRAMING PLAN – AIRPORT VIADUCT
S6.4	SECTION – AIRPORT VIADUCT
S6.5	TYPICAL TOP SLAB REINF. – AIRPORT VIADUCT
S6.6	SECTIONS – AIRPORT VIADUCT
S6.7	PLAN AND SECTION – AIRPORT VIADUCT
S7.1	DECK LAYOUT & SECTION – RAMP IF
S7.2	LOCATION PLAN – RAMP IF
S7.3	ELEVATION, DETAIL AND SECTION – RAMP IF
S8.1	PLAN AND ELEVATION – KEEHI INTERCHANGE
S8.2	DECK FRAMING PLAN – KEEHI INTERCHANGE
S8.3	PARTIAL DECK SECTION – KEEHI INTERCHANGE
S8.4	PARTIAL DECK SECTION – KEEHI INTERCHANGE
S8.5	PIER SECTION – KEEHI INTERCHANGE
S8.6	PIER SECTION – KEEHI INTERCHANGE
S8.7	SECTION – KEEHI INTERCHANGE
S8.8	PARTIAL DECK PLAN – KEEHI INTERCHANGE
S8.9	PARTIAL DECK PLAN – KEEHI INTERCHANGE
S8.10	SECTION – KEEHI INTERCHANGE
S8.11	SECTIONS – KEEHI INTERCHANGE
S8.12	SECTIONS – KEEHI INTERCHANGE
S8.13	SECTIONS – KEEHI INTERCHANGE
S9.1	PARTIAL ROADWAY PLANS – MAKAI FRONTAGE ROAD
S9.2	PLAN AND SECTIONS – MAKAI FRONTAGE ROAD
S9.3	SECTIONS – MAKAI FRONTAGE ROAD
S10.1	GENERAL PLAN – KEEHI INTERCHANGE
S10.2	LONGITUDINAL SECTIONS – KEEHI INTERCHANGE
S10.3	DECK PLAN – KEEHI INTERCHANGE
S10.4	SECTIONS & DETAILS – KEEHI INTERCHANGE
S10.5	SECTIONS & DETAILS – KEEHI INTERCHANGE
S10.6	PARTIAL DECK PLAN – KEEHI INTERCHANGE
S11.1	PARTIAL ROADWAY PLAN – NIMITZ CONN. EAST BOUND
S11.2	DECK FRAMING PLAN – NIMITZ CONN. EAST BOUND
S11.3	SECTIONS – NIMITZ CONN. EAST BOUND
S11.4	PLAN AND SECTIONS – NIMITZ CONN. EAST BOUND
S12.1	GENERAL PLAN – H-1 VIADUCT RAMP F
S12.2	PLAN – H-1 VIADUCT RAMP F
S12.3	CONCRETE END POSTS – H-1 VIADUCT RAMP F
S12.4	VIEW & SECTION – H-1 VIADUCT RAMP F

ORIGINAL PLAN
NOTE BOOK No.
SURVEY PLOTTED BY
DRAWN BY
TRACED BY
DESIGNED BY
QUANTITIES BY
CHECKED BY
DATE

STATE OF HAWAII
DEPARTMENT OF TRANSPORTATION
HIGHWAYS DIVISION

INDEX TO DRAWINGS

INTERSTATE ROUTE H-1
GUARDRAIL AND SHOULDER IMPROVEMENTS
Airport Interchange to Middle Street
Federal Aid Project No. IM-H1-1(240)

SCALE: None DATE: OCTOBER 2003

SHEET No. S0.1 OF 111 SHEETS

FILE: PCGS01.DWG
PLOT: 1 = 1

C:\KSF\GUARDRAIL\10-24-03\PCGS01.dwg, 10/23/2003 2:29:37 PM, KSFinc.pc3, 1:1

FED. ROAD DIST. NO.	STATE	FED. AID PROJ. NO.	FISCAL YEAR	SHEET NO.	TOTAL SHEETS
HAWAII	HAW.	IM-H1-1(240)	2004	ADD. 12	143

INDEX TO DRAWINGS

SHEET NO.	DESCRIPTION	SHEET NO.	DESCRIPTION
S13.1	PLAN AND SECTION – NIMITZ CONN. WEST BOUND	S17.1	TYPICAL END POST PLAN AND ELEVATION
S13.2	PLAN AND ELEVATION – NIMITZ CONN. WEST BOUND	S17.2	TYPICAL END POST PLAN
S13.3	SECTIONS AND ELEVATION – NIMITZ CONN. WEST BOUND	S17.3	TYPICAL END POST PLAN
S13.4	PLANS AND ELEVATIONS – NIMITZ CONN. WEST BOUND	S17.4	TYPICAL END POST ELEVATION
S13.5	PLAN AND SECTIONS – NIMITZ CONN. WEST BOUND	S17.5	TYPICAL SECTIONS
S13.6	PLAN, SECTIONS & DETAILS – NIMITZ CONN. WEST BOUND	S17.6	TYPICAL SECTIONS
S13.7	PLAN AND ELEVATION – NIMITZ CONN. WEST BOUND	S17.7	TYPICAL GUARDRAIL DETAILS
		S17.8	TYPICAL GUARDRAIL DETAILS
S14.1	GENERAL PLAN & ELEVATION – NIMITZ CONNECTOR EAST BOUND		
S14.2	EAST ABUTMENT PLAN – NIMITZ CONNECTOR EAST BOUND	S18.1	ATTENUATOR NOTES AND DETAILS
S14.3	CONCRETE END POST – NIMITZ CONNECTOR EAST BOUND	S18.2	TYPICAL DETAILS
S14.4	SECTIONS – NIMITZ CONNECTOR EAST BOUND		
		H1	DRAINAGE PLANS
S15.1	GENERAL PLAN – KEEHI INTERCHANGE	H2	DRAINAGE PLANS
S15.2	LONGITUDINAL SECTIONS – KEEHI INTERCHANGE	H3	DRAINAGE DETAILS
S15.3	PLAN & ELEVATION – KEEHI INTERCHANGE	H4	DRAINAGE DETAILS
S15.4	PLAN & ELEVATION – KEEHI INTERCHANGE	H5	DRAINAGE DETAILS
S15.5	PLAN – KEEHI INTERCHANGE	H6	DRAINAGE DETAILS
S15.6	SECTIONS – KEEHI INTERCHANGE	H7	DRAINAGE DETAILS
S15.7	FRAMING PLAN – KEEHI INTERCHANGE		
S15.8	TYPICAL DECK SECTIONS – KEEHI INTERCHANGE		
S15.9	PLAN – KEEHI INTERCHANGE		
S15.10	PLAN, ELEVATION & SECTION – KEEHI INTERCHANGE		
S15.11	SECTIONS – KEEHI INTERCHANGE		
S15.12	PLAN, ELEVATION & SECTION – KEEHI INTERCHANGE		
S15.13	PARTIAL DECK PLAN & SECT. – KEEHI INTERCHANGE		
S16.1	RETAINING WALL PLAN – MIDDLE STREET TUNNEL		
S16.2	RETAINING WALL PLAN & SECT. – MIDDLE STREET TUNNEL		
S16.3	SECTIONS – MIDDLE STREET TUNNEL		
S16.4	SECTIONS – MIDDLE STREET TUNNEL		
S16.5	SECTIONS – MIDDLE STREET TUNNEL		

ESTIMATED QUANTITIES

ITEM NO.	ITEM	QUANTITY	UNIT
206.6000	Structure Excavation for Retaining Wall at Middle Street Tunnel	260	CY
206.7200	Structure Backfill for Retaining Wall at Middle Street Tunnel	180	CY
206.8300	Filter Material for Retaining Wall at Middle Street Tunnel	2	CY
503.1090	Concrete for Retaining Wall at Middle Street Tunnel	(80 CY)	L.S.
507.7000	Concrete Bridge Railing	56	L.F.
507.7001	Concrete End Posts (Type I)	(1 EACH)	L.S.
507.7002	Concrete End Posts (Type II)	(1 EACH)	L.S.
507.7003	Concrete End Posts (Type III)	(1 EACH)	L.S.
507.7004	Concrete End Posts (Type IV)	(1 EACH)	L.S.
507.7005	Concrete End Posts (Type V)	(1 EACH)	L.S.
507.7006	Concrete End Posts (Type VI)	(1 EACH)	L.S.
602.0090	Reinforcing Steel for Retaining Wall at Middle Street Tunnel	(9000 LBS)	L.S.
606.3110	Guardrail Post	1	EACH
606.3360	Guardrail Type 3 Thrie Beam with Steel Posts	150	L.F.
655.1000	Drilling Holes and Installing Dowel Reinforcing Bars for End Posts	200	EACH
655.1001	Drilling Holes and Installing Dowel Reinforcing Bars for Retaining Wall at Middle Street Tunnel	6	EACH
655.1002	Drilling Holes and Installing Dowel Reinforcing Bars for Concrete Bridge Railing	110	EACH
655.1003	Drilling Holes and Installing Stainless Steel Dowels for Concrete Bridge Railing	4	EACH
655.1004	Drilling Holes and Installing Stainless Steel Dowels for Concrete Barriers at Type V End Post	5	EACH
655.1005	Drilling Holes and Installing Stainless Steel Dowels for Expansion Joints at Retaining Wall "X"	1 8	EACH

DATE	REVISION
12/09/03	1 Revise Quantity

DAVID K. FUJIWARA LICENSED PROFESSIONAL ENGINEER NO. 8104-S HAWAII, U.S.A.

THIS WORK WAS PREPARED BY ME OR UNDER MY SUPERVISION.

David K. Fujiwara 4-30-04

SIGNATURE EXPIRATION DATE OF THE LICENSE

STATE OF HAWAII
DEPARTMENT OF TRANSPORTATION
HIGHWAYS DIVISION

INDEX TO DRAWINGS
ESTIMATED QUANTITIES
INTERSTATE ROUTE H-1
GUARDRAIL AND SHOULDER IMPROVEMENTS
Airport Interchange to Middle Street
Federal Aid Project No. IM-H1-1(240)

SCALE: Non Noted DATE: OCTOBER 2003

SHEET No. S0.2 OF 111 SHEETS

ADD. 12

ORIGINAL PLAN	SURVEY PLOTTED BY	DATE
	DRAWN BY	
NOTE BOOK	TRACED BY	
	DESIGNED BY	
	QUANTITIES BY	
No.	CHECKED BY	

FILE: PCGS01.DWG
PLOT: 1 = 1

\\Cad1\ksf\2000\0066-H1 GUARDRAIL\12-08-03 ADD1\ADD1 PCGS01.dwg, 12/8/2003 9:12:05 AM, KSFinc.pc3, 1:1

FED. ROAD DIST. NO.	STATE	FED. AID PROJ. NO.	FISCAL YEAR	SHEET NO.	TOTAL SHEETS
HAWAII	HAW.	IM-H1-1(240)	2004	13	143

BRIDGE GENERAL NOTES

1. GENERAL SPECIFICATIONS: Hawaii Department of Transportation, Standard Specifications for Road and Bridge Construction, 1994, together with Special Provisions prepared for this contract.

2. DESIGN SPECIFICATIONS: AASHTO 1998 LRFD Bridge Design Specifications (Second Edition) and its subsequent interim specifications with interim supplements and modifications by the Highways Division, Department of Transportation, State of Hawaii.

3. LOADS:
   (A) Live Load: AASHTO HL-93 Truck Loading
   AASHTO TL Railing Design Loading as applicable to that specific location.

4. MATERIALS:
   (A) All concrete strengths shall be as noted below:

Item No.	Structural Parts	Classes of Concrete	Specified Compressive Strength, f'c (28 Days)
(1)	Wing Walls and Retaining walls including foundations	–	4000 PSI
(2)	Concrete Barriers	–	4000 PSI
(3)	Bridge Deck	–	5000 PSI
(4)	Approach Slab	–	4000 PSI
(5)	Except as noted otherwise all others	A	3000 PSI

All concrete with the exception of Class A concrete shall have a minimum W/C Ratio of 0.45. The W/C Ratio for Class A Concrete shall follow the standard specifications.

(B) All reinforcing steel shall be ASTM A 615 Grade 60 unless otherwise noted.

(C) Reinforcing steel shall be ASTM A 706 where welded connections are required.

(D) All structural steel shall be ASTM A 36 hot dip galvanized after fabrication, unless otherwise noted.

(E) All anchor bolts, washers and nuts shall be AASHTO M164 hot dip galvanized after fabrication, unless otherwise specified.

(F) All stainless steel dowels shall be Type 316L.

5. REINFORCEMENT:

(A) The minimum cover measured from the surface of the concrete to the face of any new reinforcing bars shall be as follows, except as otherwise noted:

(1) Deck slabs
A. Top bars = 2"
B. Bottom bars = 1 1/2"

(2) Retaining walls = 2"

(3) Abutment Walls and Wing Walls = 2" to ties or outermost reinforcing

(4) Approach slab top bars = 2"
Approach slab bottom bars = 3"

(5) Concrete cast against and permanently exposed to earth = 3"

(6) All others unless otherwise noted = 2".

(B) Reinforcing bars shall be detailed in accordance with the latest edition of the AASHTO LRFD Bridge Design Specification unless otherwise noted.

(C) Minimum clear spacing between parallel bars shall be 1 1/2 times the diameter of bars (for non bundled bars). In no case shall the clear distance between the bars be less than 1 1/2 times the maximum size of the coarse aggregate or 1 1/2".

(D) All dimensions relating to reinforcing bars are to centers of bars unless otherwise noted.

(E) Reinforcing bars shall be securely tied at all intersections and lap splices except where the spacing of intersections is less than one foot in each direction, in which case alternate intersections shall be tied.

(F) Stainless steel dowels shall not be in contact with reinforcing steel bars.

CONSTRUCTION NOTES:

6. (A) See Standard Specifications and Special Provisions.

(B) In general, top of concrete deck slab and pavement shall be constructed to follow the roadway vertical and horizontal curves and superelevations.

(C) Except as otherwise noted, all vertical dimensions are measured plumb.

(D) The Contractor shall verify all site conditions and as-built plans and not rely upon these plans for existing ground elevations, dimensions, reinforcing, etc. Conditions may differ from those shown. As-built plans for the structures are available from the Highways Design Branch located at the Department of Transportation, Highways Division, Kakuhihewa Building, Room 609, 601 Kamokila Boulevard, Kapolei, HI 96707. The phone number is 692-7583.

(E) The Contractor shall verify the location of all utility lines and notify the respective owners before commencing with excavation, any temporary piling or sheeting, or any demolition of concrete.

(F) For concrete finish see Standard Specifications and Special Provisions.

(G) Construction joints may be relocated or additional ones added subject to the approval of the Engineer.

(H) Unless otherwise noted, all exposed concrete edges shall be chamfered 3/4" x 3/4".

(J) When existing reinforcing is to remain and concrete around it is to be demolished, reinforcing that is to remain shall not be damage in any way.

(K) Concrete surfaces in which new concrete is poured against shall be cleaned and roughened to a full amplitude of 1/4 of an inch unless otherwise noted.

(L) All footings shall be on firm undisturbed soil.

(M) Unless otherwise noted, the existing grade shall be the finish grade.

(N) New PCC and A.C. pavement sections shall match the existing PCC and A.C. pavement section.

(P) Large impacting or vibratory type of equipment will not be permitted in the drilling of holes.

(Q) The Manufacturer's recommendations shall be followed for drilling and epoxying dowels and applying epoxy bonding agents.

GENERAL:

7. (A) All items not listed in the proposal schedule will not be paid for separately.

(B) Standard detail drawings refer to all structures in general, except for modifications as may be required for special conditions. For such modifications refer to the corresponding detailed drawings.

(C) Removal of existing attenuators and sand barrels including all attachments, embedments, bolts, and all related materials shall be considered incidental to Section 693, Terminal Impact Attenuator.

(D) At some existing sand barrel locations, attenuator materials from previously removed attenuators still exist. These materials shall be removed and the cost of the removal shall be considered incidental to Section 693, Terminal Impact Attenuator.

(E) At the discretion of the Engineer, salvageable attenuator materials and sand barrels shall be delivered to the Oahu District Baseyard. The cost for delivering the attenuator materials and sand barrels shall be considered incidental to Section 693, Terminal Impact Attenuator. The remainder of the materials shall be disposed of at the contractor's expense.

ORIGINAL PLAN
NOTE BOOK No.
SURVEY PLOTTED BY
DRAWN BY
TRACED BY
DESIGNED BY
QUANTITIES BY
CHECKED BY
DATE

DAVID K. FUJIWARA
LICENSED PROFESSIONAL ENGINEER
NO. 8104-S
HAWAII, U.S.A.

THIS WORK WAS PREPARED BY ME OR UNDER MY SUPERVISION.

SIGNATURE — EXPIRATION DATE OF THE LICENSE 4-30-04

STATE OF HAWAII
DEPARTMENT OF TRANSPORTATION
HIGHWAYS DIVISION

GENERAL NOTES

INTERSTATE ROUTE H-1
GUARDRAIL AND SHOULDER IMPROVEMENTS
Airport Interchange to Middle Street
Federal Aid Project No. IM-H1-1(240)

SCALE: None DATE: OCTOBER 2003

SHEET No. S0.3 OF 111 SHEETS

FILE: PCGS03.DWG
PLOT: 1 = 1

\\Cadt\xsf\2000\0066-H1 GUARDRAIL\11-05-03\PCGS03.dwg, 11/5/2003 10:10:36 AM, KSFinc.pc3, 1:1

FED. ROAD DIST. NO.	STATE	FED. AID PROJ. NO.	FISCAL YEAR	SHEET NO.	TOTAL SHEETS
HAWAII	HAW.	IM-H1-1(240)	2004	14	143

SYMBOLS AND ABBREVIATIONS

&	And
@	At
ø	Diameter
≥	Greater Than or Equal to
≤	Less Than or Equal to
#	Number
Abut.	Abutment
Abbr.	Abbreviation
Add.	Additional
Alt.	Alternate
AB	Anchor Bolt
AC	Asphaltic Concrete
Approx.	Approximate
Az.	Azimuth
Bk.	Back
Bal.	Balance
℄	Baseline
Bm.	Beam
Brg., Brgs.	Bearing, Bearings
BVC	Beginning of Vertical Curve
Bet.	Between
BF	Both Faces
BW	Both Ways
BFE	Bottom of Footing Elevation
Bot., Bott., B	Bottom
Br.	Bridge
Blt.	Bolt
Cant.	Cantilever
CIP	Cast Iron Pipe
℄	Center line
CG	Center of Gravity
cc	Center to Center
Cl.	Class
Clr.	Clearance
Col.	Column
Conc.	Concrete
Conn.	Connection
Const.	Construction
CJ	Construction Joint
Cntl. Jt.	Control Joint
CLSM	Controlled Low Strength Material
Cont.	Continuous
CF	Cubic Feet
CY, Cu. Yd.	Cubic Yard
Det.	Detail
Dia.	Diameter
Diaph.	Diaphragm
Dim.	Dimension
Dist.	Distance
DO	Ditto
Dwls.	Dowels
Dn.	Down
Dbl.	Double
DI	Drain Inlet, Ductile Iron
Dwg., Dwgs.	Drawing, Drawings
DS	Drilled Shaft
EA, Ea., ea.	Each
EF	Each Face
EFH	Each Face Horizontal
EFV	Each Face Vertical
EW	Each Way
EP	Edge of Pavement
E	East
Elec.	Electrical
EMH	Electrical Manhole
El., Elev.	Elevation
Emb.	Embankment
EVC	End of Vertical Curve
Eq.	Equal
Est.	Estimated
Exc.	Excavation
Excl.	Excluding
Exist., Ex.	Existing
Exp., (E)	Expansion
EJ	Expansion Joint
Ext.	Exterior
FF	Far Face, Front Face
F'c	Specified Strength of Concrete
F'ci	Strength of Concrete at Time of Initial Prestress
Ft.	Feet, Foot
Fig.	Figure
Fin. Gr.	Finish Grade
(F)	Fixed
FB	Flat Bar
Ftg.	Footing
FA	Force account
Ga.	Gage, Gauge
Galv.	Galvanized
G, Gir.	Girder
GFRP	Glass Fiber Reinforced Polymer
Gr.	Grade
Grd.	Ground
Ht.	Height
(H)	Hinge
Horiz., H	Horizontal
HS	High strength
HECO	Hawaiian Electric Company
IB	Inbound
In.	Inch
ID	Inside Diameter
IF	Inside Face
Int.	Interior
Inv.	Invert
Jt.	Joint
K	Kips
KF	Kip Foot
KSF	Kips Per Square Foot
KSI	Kips Per Square Inch
KLF	Kips Per Linear Foot
L	Length
lb., lbs., LBS.	Pound, Pounds
Ltg. Std.	Lighting Standard
LF	Linear Feet/Foot
Lin. Ft.	Linear Feet/Foot
LS	Lump Sum
Longit.	Longitudinal
MH	Manhole
Max.	Maximum
Mech.	Mechanical
Min.	Minimum
Misc.	Miscellaneous
MPH	Miles Per Hour
NF	Near Face
N	North
NIC	Not in Contract
No.	Number
NTS	Not to Scale
O/S	Offset
oc	On Center
Opn'g	Opening
OB	Outbound
OD	Outside Diameter
OG	Outside Girder, Outbound Girder
Perf.	Perforated
PL	Plate
PCC	Portland Cement Concrete
PC	Point of Curvature
PCF	Pounds per Cubic Foot
PSF	Pounds per Square Foot
PSI	Pounds per Square Inch
PLF	Pounds per Linear Foot
PI	Point of Intersection of Tangents
PIVC	Point of Intersection of Vertical Curve
PT	Point of Tangency
Pt., Pts.	Point, Points
PRC	Point of Reverse Curvature
PVC	Polyvinyl Chloride
Prestr.	Prestressed
P/S	Prestressed Strands
PB	Pull Box
Rad., R	Radius
RF	Rear Face
Rebar	Reinforcing Bar
Ref.	Reference
Reinf.	Reinforced, Reinforcing, Reinforcement
Req'd.	Required
Ret.	Retaining
ROW	Right of Way
Rdwy.	Roadway
Sect.	Section
Sht.	Sheet
Sl.	Slope
S	South
Spc., Spg.	Spaces, Spacing
Sprd.	Spread
Spec.	Specification
SF	Square Feet
SY	Square Yard
SS	Stainless Steel
Std.	Standard
Sta.	Station
Stiff.	Stiffener
Stirr.	Stirrup
Str.	Straight
Struct.	Structure
SE	Super Elevation
Symm.	Symmetrical
Tan.	Tangent
Temp.	Temporary
Thk.	Thick
T	Top
T&B	Top and Bottom
TOD	Top of Deck
TFE	Top of Footing Elevation
Tot.	Total
Transv.	Transverse
TS	Structural Tubing
Typ.	Typical
Undergrd.	Underground
U.O.N.	Unless Otherwise Noted
Var.	Varies
Vert., V	Vertical
VC	Vertical Curve
W/C	Water/Cement Ratio
w/	With
W	West
WWF	Welded Wire Fabric
WW	Wingwall
WP	Work Point, Working Point
WS	Water Surface
Yr.	Year

ORIGINAL PLAN | SURVEY PLOTTED BY | DRAWN BY | TRACED BY | DESIGNED BY | QUANTITIES BY | CHECKED BY | DATE | NOTE BOOK No.

DAVID K. FUJIWARA LICENSED PROFESSIONAL ENGINEER NO. 8104-S HAWAII, U.S.A.

THIS WORK WAS PREPARED BY ME OR UNDER MY SUPERVISION.

SIGNATURE — EXPIRATION DATE OF THE LICENSE 4-30-04

STATE OF HAWAII
DEPARTMENT OF TRANSPORTATION
HIGHWAYS DIVISION

SYMBOLS AND ABBREVIATIONS

INTERSTATE ROUTE H-1
GUARDRAIL AND SHOULDER IMPROVEMENTS
Airport Interchange to Middle Street
Federal Aid Project No. IM-H1-1(240)

SCALE: None — DATE: OCTOBER 2003

SHEET No. S0.4 OF 111 SHEETS

FILE: PCG-S04.DWG
PLOT: 1 = 1

C:\KSF\GUARDRAIL\10-24-03\PCGS04.dwg, 10/23/2003 2:31:49 PM, KSFinc.pc3, 1:1

FED. ROAD DIST. NO.	STATE	FED. AID PROJ. NO.	FISCAL YEAR	SHEET NO.	TOTAL SHEETS
HAWAII	HAW.	IM-H1-1(240)	2004	15	143

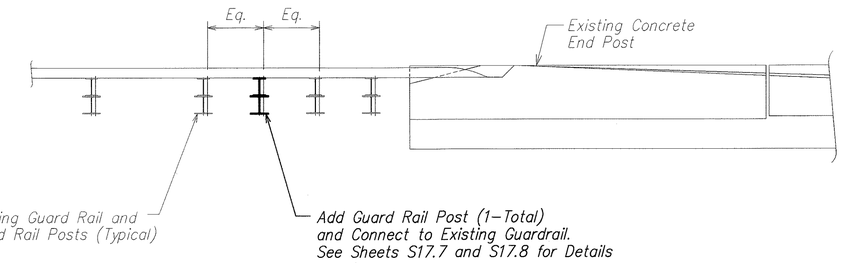

LAYOUT PLAN

Scale: 1/2 " = 1'-0"

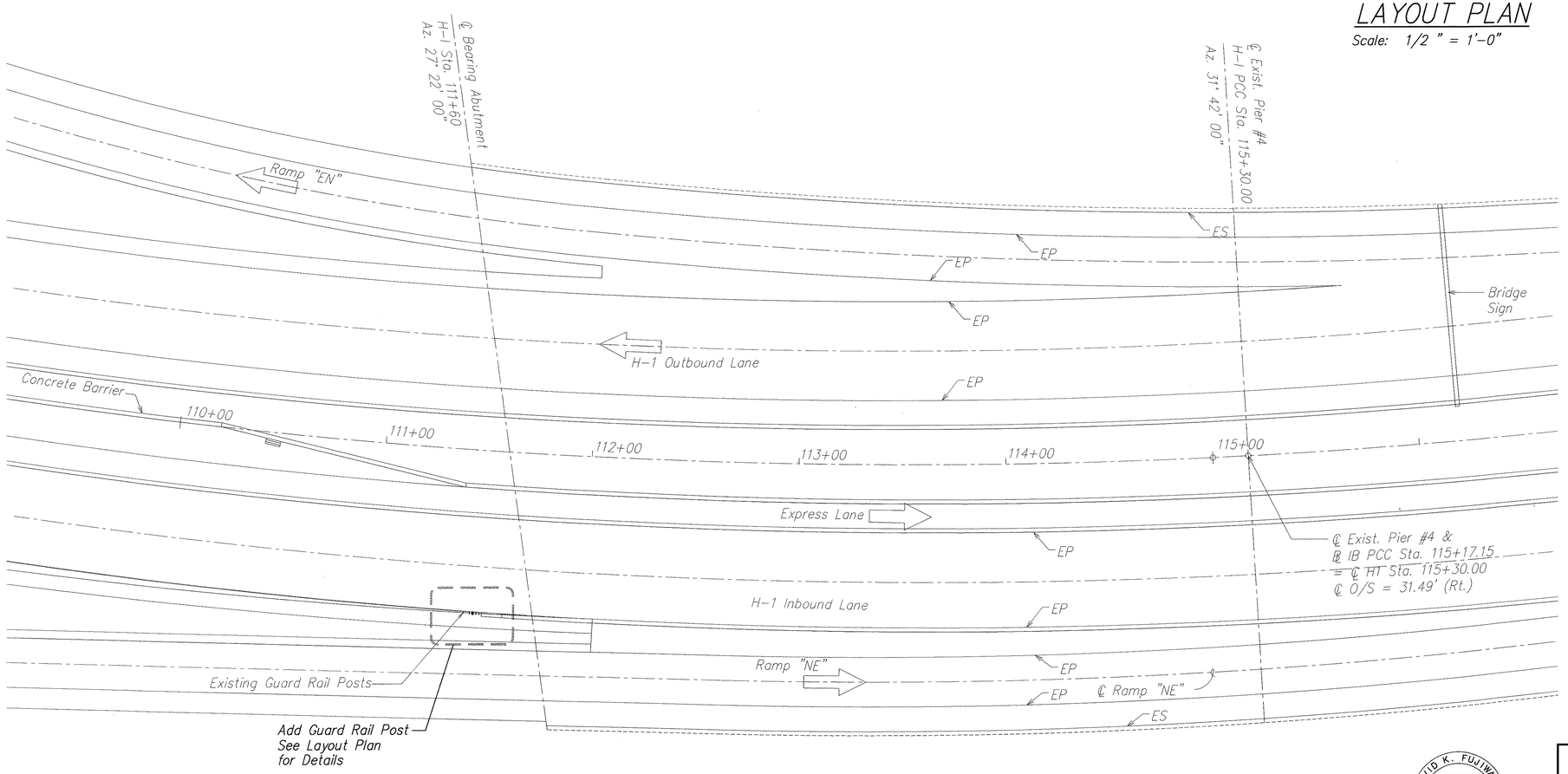

PARTIAL GENERAL LAYOUT PLAN
AIRPORT VIADUCT

SCALE: 1" = 30'-0"

ORIGINAL PLAN		DATE
	SURVEY PLOTTED BY	
	DRAWN BY	
NOTE BOOK	TRACED BY	
	DESIGNED BY	
	QUANTITIES BY	
No.	CHECKED BY	

DAVID K. FUJIWARA
LICENSED PROFESSIONAL ENGINEER
NO. 8104-S
HAWAII, U.S.A.

THIS WORK WAS PREPARED BY ME OR UNDER MY SUPERVISION.

SIGNATURE — EXPIRATION DATE OF THE LICENSE 4-30-04

STATE OF HAWAII
DEPARTMENT OF TRANSPORTATION
HIGHWAYS DIVISION

PARTIAL LAYOUT PLAN
AIRPORT VIADUCT
INTERSTATE ROUTE H-1
GUARDRAIL AND SHOULDER IMPROVEMENTS
Airport Interchange to Middle Street
Federal Aid Project No. IM-H1-1(240)

SCALE: As Noted — DATE: OCTOBER 2003

SHEET No. S1.1 OF 111 SHEETS

FILE: PCGS11.DWG
PLOT: 1 = 1

C:\KSF\GUARDRAIL\10-24-03\PCGS0101.dwg, 10/23/2003 2:38:08 PM, KSFinc.pc3, 1:1

FED. ROAD DIST. NO.	STATE	FED. AID PROJ. NO.	FISCAL YEAR	SHEET NO.	TOTAL SHEETS
HAWAII	HAW.	IM-H1-1(240)	2004	16	143

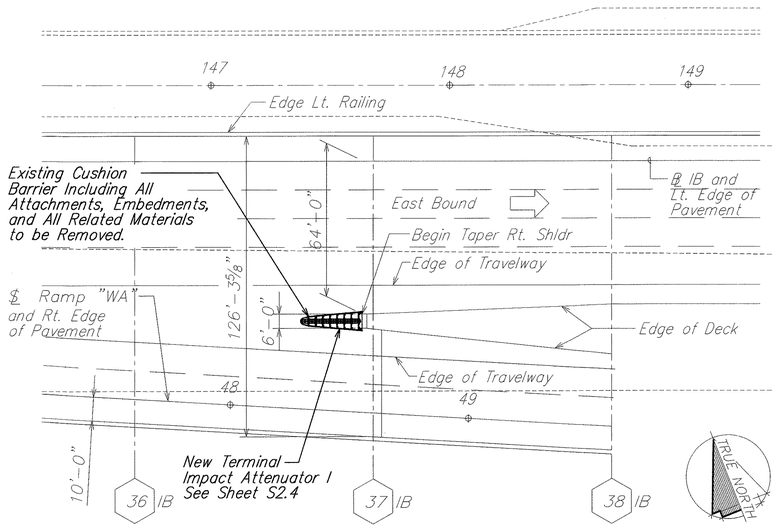

PARTIAL GENERAL LAYOUT PLAN

SCALE: 1' = 30'-0"

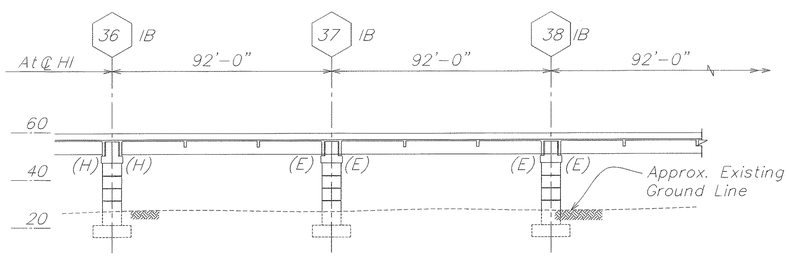

LONGITUDINAL DECK SECTION ALONG ℄ INBOUND

SCALE: 1" = 30'-0"

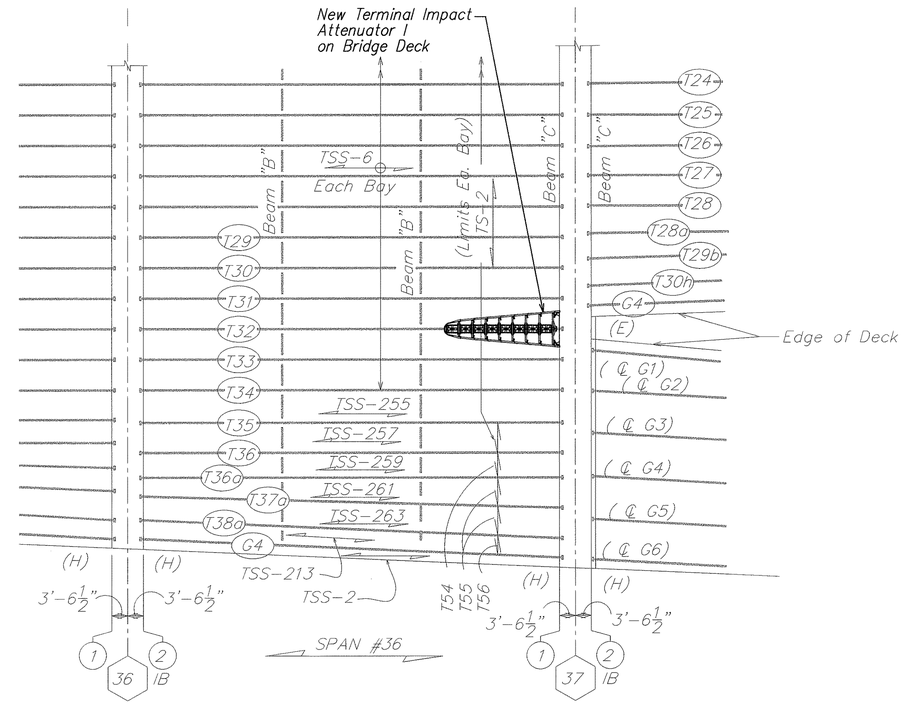

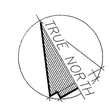

EXISTING PARTIAL DECK FRAMING PLAN ℄ IB STA. 139+26.00 TO ℄ IB STA. 147+69.00

SCALE: 1/16" = 1'-0"

ORIGINAL PLAN	SURVEY PLOTTED BY	DATE
	DRAWN BY	
	TRACED BY	
NOTE BOOK	DESIGNED BY	
	QUANTITIES BY	
No.	CHECKED BY	

DAVID K. FUJIWARA LICENSED PROFESSIONAL ENGINEER NO. 8104-S HAWAII, U.S.A.

THIS WORK WAS PREPARED BY ME OR UNDER MY SUPERVISION.

SIGNATURE — EXPIRATION DATE OF THE LICENSE 4-30-04

STATE OF HAWAII
DEPARTMENT OF TRANSPORTATION
HIGHWAYS DIVISION

PLANS AND SECTION
AIRPORT VIADUCT
INTERSTATE ROUTE H-1
GUARDRAIL AND SHOULDER IMPROVEMENTS
Airport Interchange to Middle Street
Federal Aid Project No. IM-H1-1(240)

SCALE: As Noted — DATE: OCTOBER 2003

SHEET No. S2.1 OF 111 SHEETS

FILE: PCG-S21
PLOT: 1 = 1

C:\KSF\GUARDRAIL\10-24-03\PCGS0201.dwg, 10/23/2003 2:45:49 PM, KSFinc.pc3, 1:1

FED. ROAD DIST. NO.	STATE	FED. AID PROJ. NO.	FISCAL YEAR	SHEET NO.	TOTAL SHEETS
HAWAII	HAW.	IM-H1-1(240)	2004	17	143

NOTE "F"

Top and bottom transverse deck slab reinforcement T1, T2, T3 located normal to and measured along adjacent tee or girder.

NOTE "G"

Bottom slab distribution reinforcement Located normal to slab main Reinforcement.

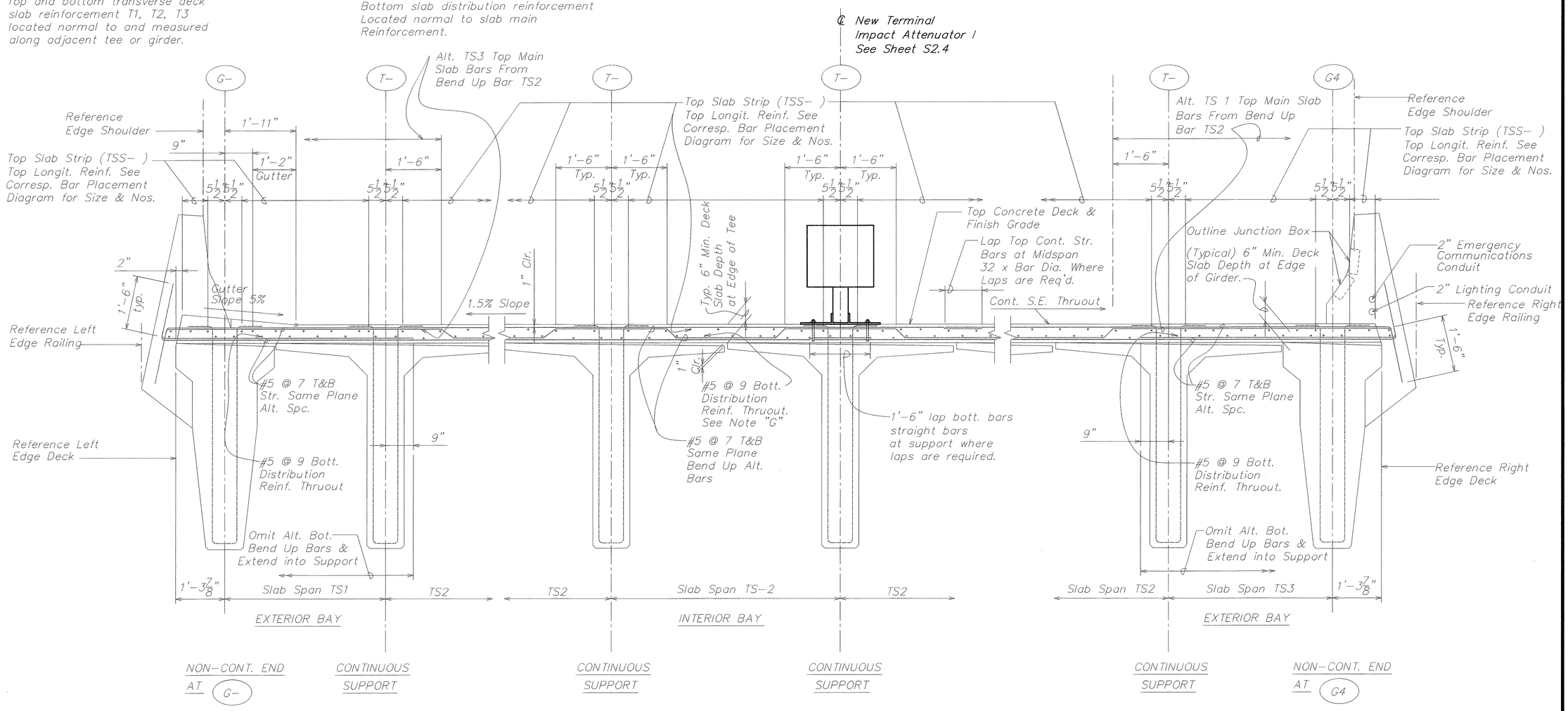

EXISTING TRANSVERSE DECK SLAB SECTION TS1, TS2, TS3

SCALE: 3/4" = 1'-0"

ORIGINAL PLAN	SURVEY PLOTTED BY	DATE
	DRAWN BY	
NOTE BOOK	TRACED BY	
	DESIGNED BY	
No.	QUANTITIES BY	
	CHECKED BY	

DAVID K. FUJIWARA LICENSED PROFESSIONAL ENGINEER NO. 8104-S HAWAII, U.S.A.

THIS WORK WAS PREPARED BY ME OR UNDER MY SUPERVISION.

David K. Fujiwara 4-30-04

SIGNATURE EXPIRATION DATE OF THE LICENSE

STATE OF HAWAII
DEPARTMENT OF TRANSPORTATION
HIGHWAYS DIVISION

SECTION
AIRPORT VIADUCT
INTERSTATE ROUTE H-1
GUARDRAIL AND SHOULDER IMPROVEMENTS
Airport Interchange to Middle Street
Federal Aid Project No. IM-H1-1(240)

SCALE: As Noted DATE: OCTOBER 2003

SHEET No. S2.2 OF 111 SHEETS

FILE: PCG-S22
PLOT: 1 = 1

C:\KSF\GUARDRAIL\10-24-03\PCGS0202.dwg, 10/23/2003 2:47:41 PM, KSFinc.pc3, 1:1

FED. ROAD DIST. NO.	STATE	FED. AID PROJ. NO.	FISCAL YEAR	SHEET NO.	TOTAL SHEETS
HAWAII	HAW.	IM-H1-1(240)	2004	18	143

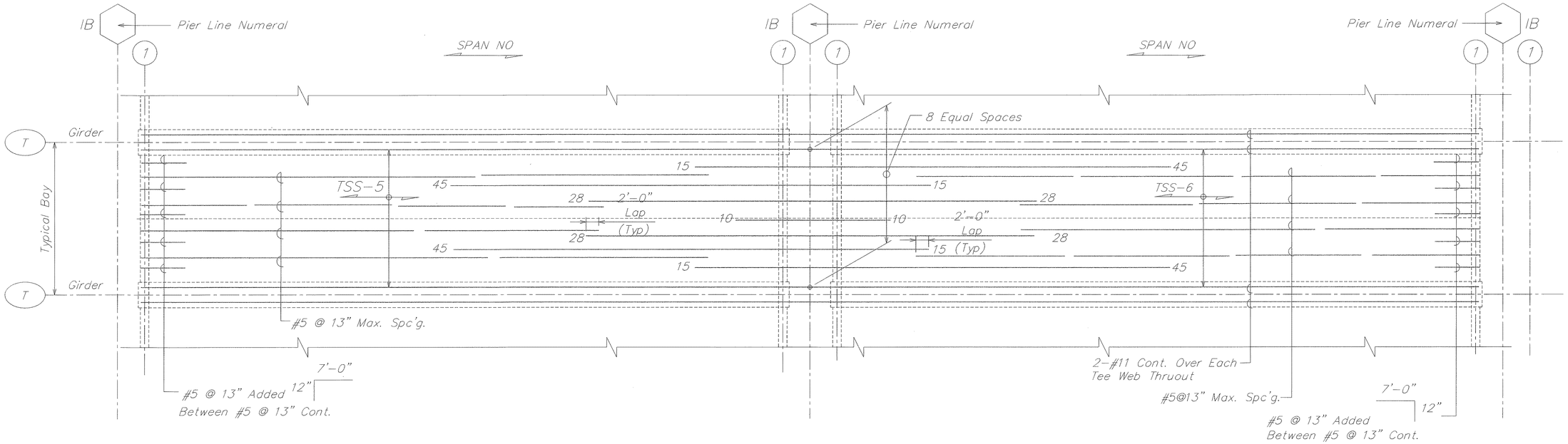

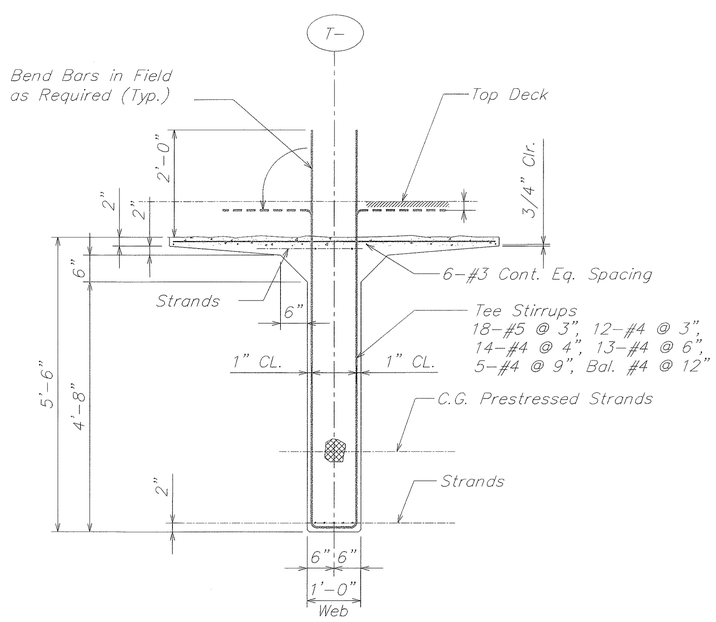

TYPICAL EXISTING PRESTRESSED TEE SECTION (B) S2.3 | S2.3

SCALE: 3/4" = 1'-0"

EXISTING TOP OF SLAB REINFORCEMENT STRIPS TSS-5, TSS-6 (A) S2.3 | S2.3

SCALE: NTS

NOTES:

All reinforcement #11 except as otherwise noted.

Number at ends of bars denotes dimension in feet from the adjacent pier line numeral.

For additional slab reinforcement, see typical deck slab section and corresponding details.

All #5 @ 13" max. bars extended and lapped 2'-0" min with the adjacent #11 bars as shown.

Cont. added are continuous bars from one or more spans extended partially into the adjacent span at ends.

⊖⊖ Indicate bundle bars in groups of twos.

ORIGINAL PLAN	SURVEY PLOTTED BY	DATE
	DRAWN BY	
NOTE BOOK	TRACED BY	
	DESIGNED BY	
	QUANTITIES BY	
No.	CHECKED BY	

DAVID K. FUJIWARA
LICENSED PROFESSIONAL ENGINEER
NO. 8104-S
HAWAII, U.S.A.

THIS WORK WAS PREPARED BY ME OR UNDER MY SUPERVISION.

SIGNATURE — EXPIRATION DATE OF THE LICENSE 4-30-04

STATE OF HAWAII
DEPARTMENT OF TRANSPORTATION
HIGHWAYS DIVISION

PLAN AND SECTION
AIRPORT VIADUCT
INTERSTATE ROUTE H-1
GUARDRAIL AND SHOULDER IMPROVEMENTS
Airport Interchange to Middle Street
Federal Aid Project No. IM-H1-1(240)

SCALE: As Noted — DATE: OCTOBER 2003

SHEET No. S2.3 OF 111 SHEETS

FILE: PCGS24.DWG
PLOT: 1 = 1

C:\KSF\GUARDRAIL\10-24-03\PCGS0203.dwg, 10/23/2003 2:48:14 PM, KSFinc.pc3, 1:1

FED. ROAD DIST. NO.	STATE	FED. AID PROJ. NO.	FISCAL YEAR	SHEET NO.	TOTAL SHEETS
HAWAII	HAW.	IM-H1-1(240)	2004	19	143

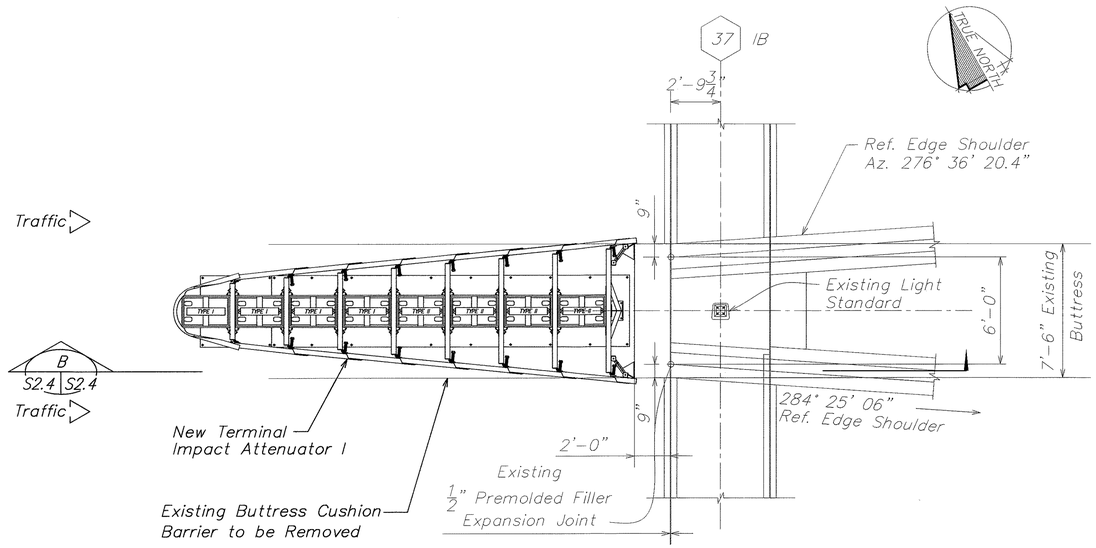

PLAN A

SCALE: 1/4"=1'-0" S2.4 S2.4

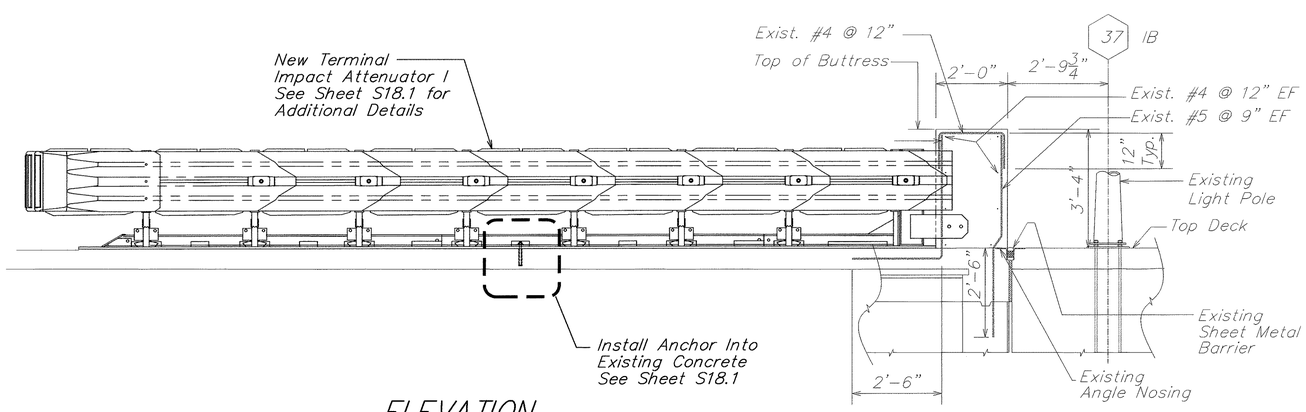

ELEVATION

SECTION B

SCALE: 1/2" = 1'-0" S2.4 S2.4

ORIGINAL PLAN	SURVEY PLOTTED BY	DATE
	DRAWN BY	
NOTE BOOK	TRACED BY	
	DESIGNED BY	
	QUANTITIES BY	
No.	CHECKED BY	

DAVID K. FUJIWARA LICENSED PROFESSIONAL ENGINEER NO. 8104-S HAWAII, U.S.A.

THIS WORK WAS PREPARED BY ME OR UNDER MY SUPERVISION.

SIGNATURE EXPIRATION DATE OF THE LICENSE 4-30-04

STATE OF HAWAII
DEPARTMENT OF TRANSPORTATION
HIGHWAYS DIVISION

DETAIL AND SECTION
AIRPORT VIADUCT
INTERSTATE ROUTE H-1
GUARDRAIL AND SHOULDER IMPROVEMENTS
Airport Interchange to Middle Street
Federal Aid Project No. IM-H1-1(240)

SCALE: As Noted DATE: OCTOBER 2003

SHEET No. S2.4 OF 111 SHEETS

FILE: P11S24.DWG
PLOT: 1 = 1

C:\KSF\GUARDRAIL\10-24-03\PCGS0204.dwg, 10/23/2003 2:51:42 PM, KSFinc.pc3, 1:1

FED. ROAD DIST. NO.	STATE	FED. AID PROJ. NO.	FISCAL YEAR	SHEET NO.	TOTAL SHEETS
HAWAII	HAW.	IM-H1-1(240)	2004	20	143

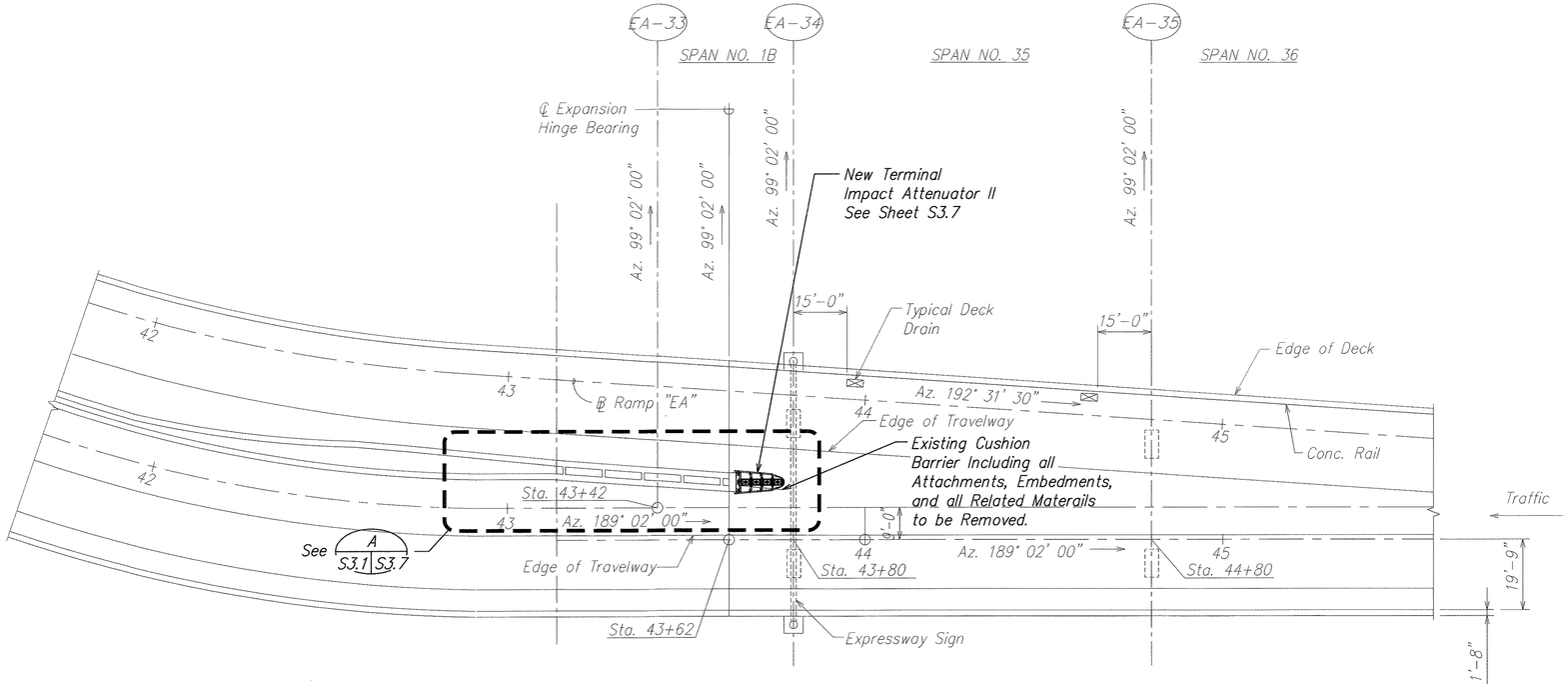

DECK LAYOUT PLAN – RAMPS "ED" & "EA" BETWEEN GRID EA-33 AND EA-35

SCALE: 1" = 20'-0"

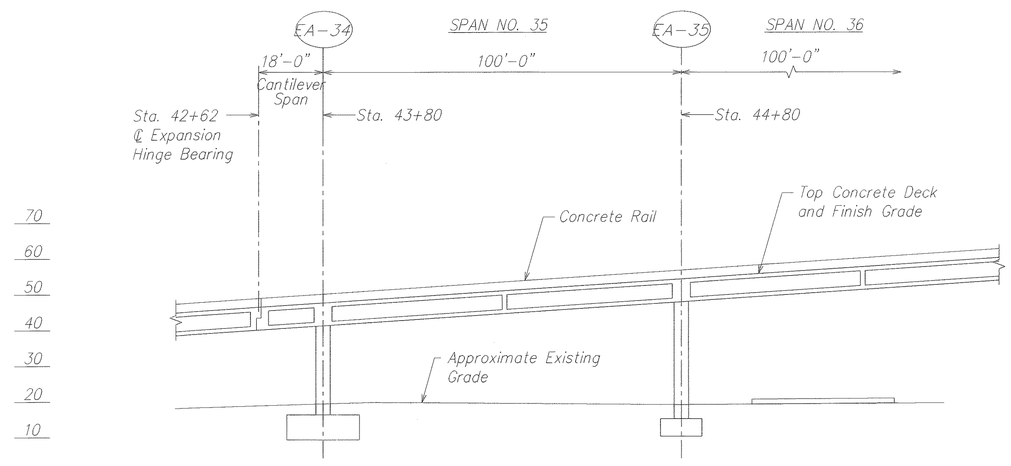

LONGITUDINAL SECTION ALONG ℄ RAMP "EA" BETWEEN GRID EA-33 AND EA-35

SCALE: 1" = 20'-0"

DAVID K. FUJIWARA LICENSED PROFESSIONAL ENGINEER NO. 8104-S HAWAII, U.S.A.

THIS WORK WAS PREPARED BY ME OR UNDER MY SUPERVISION.

SIGNATURE — EXPIRATION DATE OF THE LICENSE 4-30-04

STATE OF HAWAII
DEPARTMENT OF TRANSPORTATION
HIGHWAYS DIVISION

DECK LAYOUT & ELEVATION
AIRPORT INTERCHANGE
INTERSTATE ROUTE H-1
GUARDRAIL AND SHOULDER IMPROVEMENTS
Airport Interchange to Middle Street
Federal Aid Project No. IM-H1-1(240)

SCALE: As Noted — DATE: OCTOBER 2003

SHEET No. S3.1 OF 111 SHEETS

ORIGINAL PLAN — NOTE BOOK No. — SURVEY PLOTTED BY — DRAWN BY — TRACED BY — DESIGNED BY — QUANTITIES BY — CHECKED BY — DATE

FILE: PCCS31.DWG
PLOT: 1 = 1

C:\KSF\GUARDRAIL\10-24-03\PCGS0301.dwg, 10/23/2003 2:52:56 PM, KSFinc.pc3, 1:1

FED. ROAD DIST. NO.	STATE	FED. AID PROJ. NO.	FISCAL YEAR	SHEET NO.	TOTAL SHEETS
HAWAII	HAW.	IM-H1-1(240)	2004	21	143

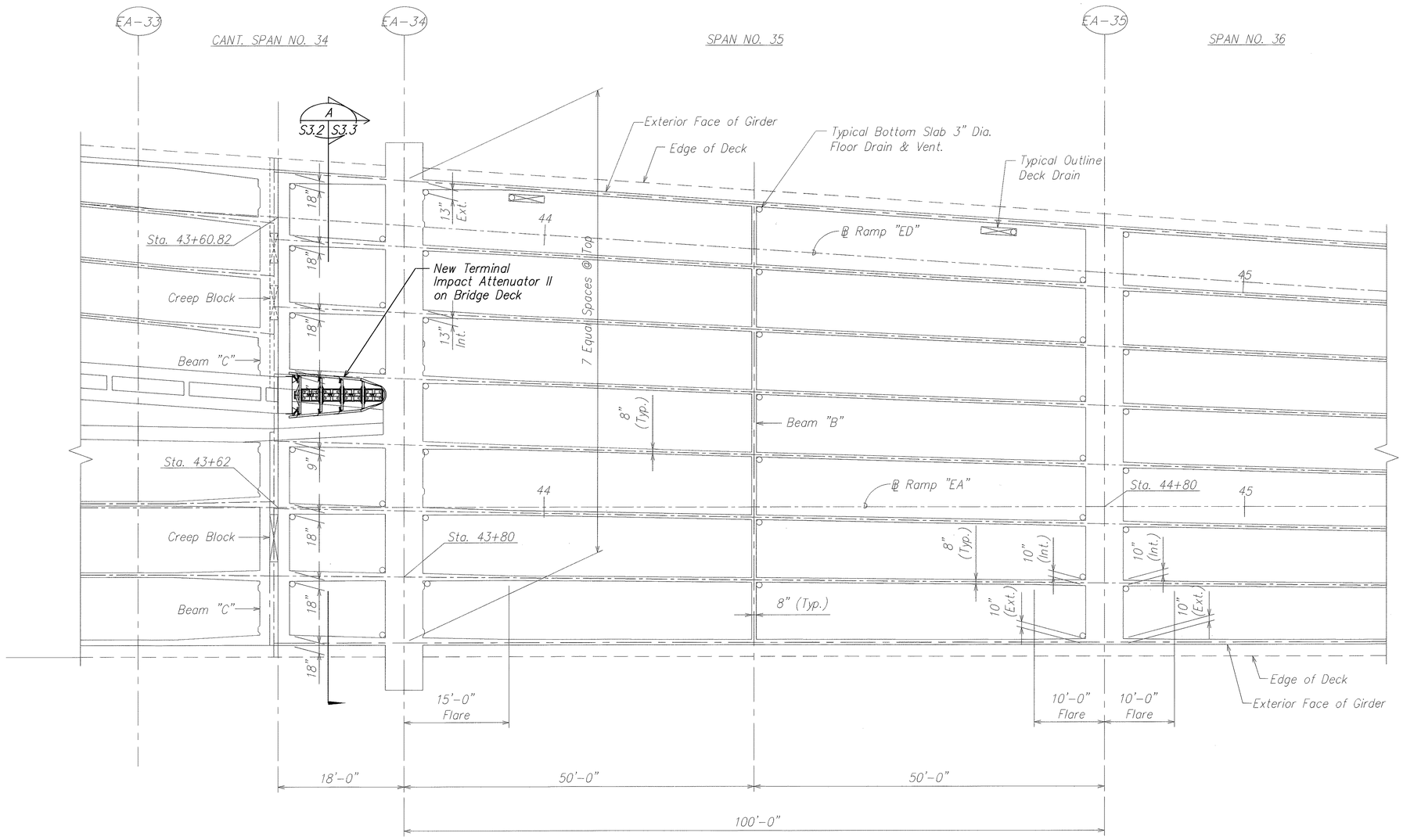

N

EXISTING PARTIAL DECK FRAMING PLAN
RAMP "EA-ED" SPAN NOS. 34, 35, 36

SCALE: 1/8" = 1'-0

DAVID K. FUJIWARA
LICENSED PROFESSIONAL ENGINEER
NO. 8104-S
HAWAII, U.S.A.

THIS WORK WAS PREPARED BY ME OR UNDER MY SUPERVISION.

David K. Fujiwara
SIGNATURE

4-30-04
EXPIRATION DATE OF THE LICENSE

STATE OF HAWAII
DEPARTMENT OF TRANSPORTATION
HIGHWAYS DIVISION

PARTIAL DECK FRAMING PLAN
AIRPORT INTERCHANGE
INTERSTATE ROUTE H-1
GUARDRAIL AND SHOULDER IMPROVEMENTS
Airport Interchange to Middle Street
Federal Aid Project No. IM-H1-1(240)

SCALE: As Noted DATE: OCTOBER 2003

SHEET No. S3.2 OF 111 SHEETS

ORIGINAL PLAN	SURVEY PLOTTED BY	DATE
	DRAWN BY	"
NOTE BOOK	TRACED BY	"
	DESIGNED BY	"
No.	QUANTITIES BY	"
	CHECKED BY	"

FILE: PCGS32.DWG
PLOT: 1 = 1

C:\KSF\GUARDRAIL\10-24-03\PCGS0302.dwg, 10/23/2003 2:53:49 PM, KSFinc.pc3, 1:1

FED. ROAD DIST. NO.	STATE	FED. AID PROJ. NO.	FISCAL YEAR	SHEET NO.	TOTAL SHEETS
HAWAII	HAW.	IM-H1-1(240)	2004	22	143

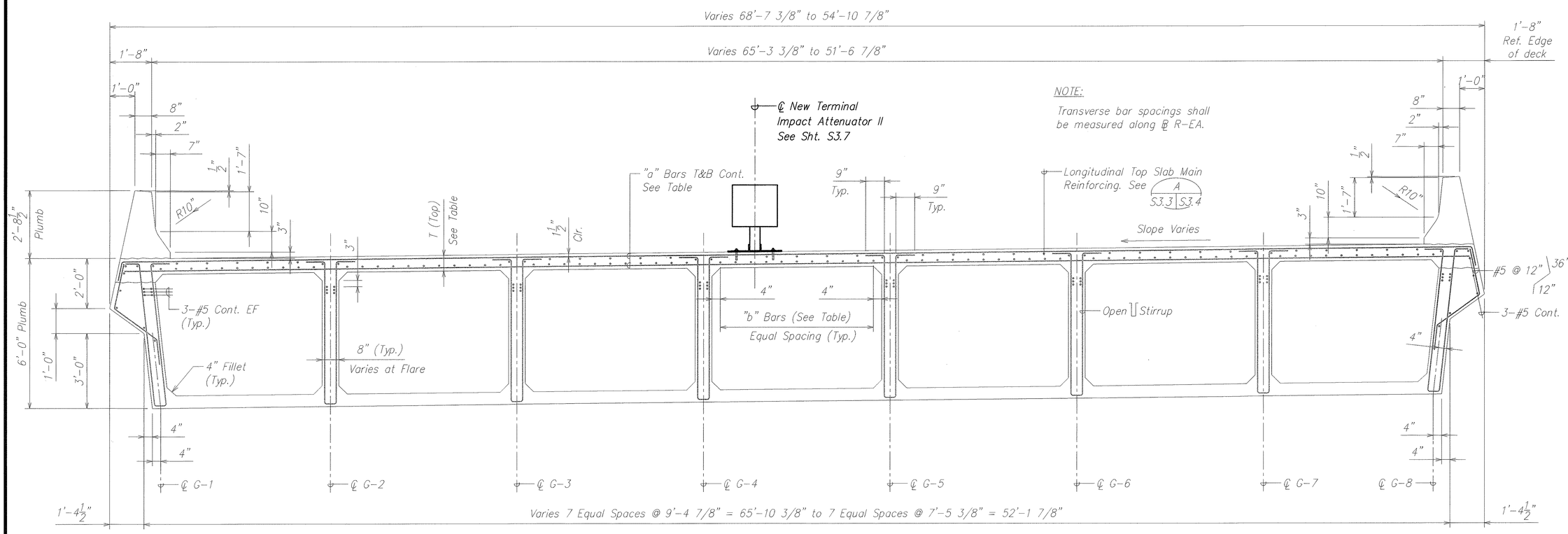

NOTE:

Transverse bar spacings shall be measured along ℄ R-EA.

NOTE:

All reinforcing shown on this sheet are existing bars.

Slab Reinforcing & Thickness				
Sta. Along ℄ R-EA	T (Top)	T (Bot)	"a" bars	"b' bars
43+62 to 44+80	7 3/4"	6 5/8"	#6 @ 6 1/2"	12-#5
44+80 to 45+80	7 1/2"	6"	#6 @ 6 1/2"	11-#5

EXISTING DECK SECTION NORMAL TO BASELINE RAMP "EA" STA. 43+80 TO STA. 46+62

A S3.2 S3.3

Scale: 1/2" = 1'-0"

ORIGINAL PLAN | SURVEY PLOTTED BY | DRAWN BY | TRACED BY | DESIGNED BY | QUANTITIES BY | CHECKED BY | DATE | NOTE BOOK No.

DAVID K. FUJIWARA LICENSED PROFESSIONAL ENGINEER NO. 8104-S HAWAII, U.S.A.

THIS WORK WAS PREPARED BY ME OR UNDER MY SUPERVISION.

SIGNATURE — EXPIRATION DATE OF THE LICENSE 4-30-04

STATE OF HAWAII
DEPARTMENT OF TRANSPORTATION
HIGHWAYS DIVISION

SECTION
AIRPORT INTERCHANGE
INTERSTATE ROUTE H-1
GUARDRAIL AND SHOULDER IMPROVEMENTS
Airport Interchange to Middle Street
Federal Aid Project No. IM-H1-1(240)

SCALE: As Noted — DATE: OCTOBER 2003

SHEET No. S3.3 OF 111 SHEETS

22

FILE: PCGS33.DWG
PLOT: 1 = 1

C:\KSF\GUARDRAIL\10-24-03\PCGS0303.dwg, 10/23/2003 2:55:16 PM, KSFinc.pc3, 1:1

FED. ROAD DIST. NO.	STATE	FED. AID PROJ. NO.	FISCAL YEAR	SHEET NO.	TOTAL SHEETS
HAWAII	HAW.	IM-H1-1(240)	2004	23	143

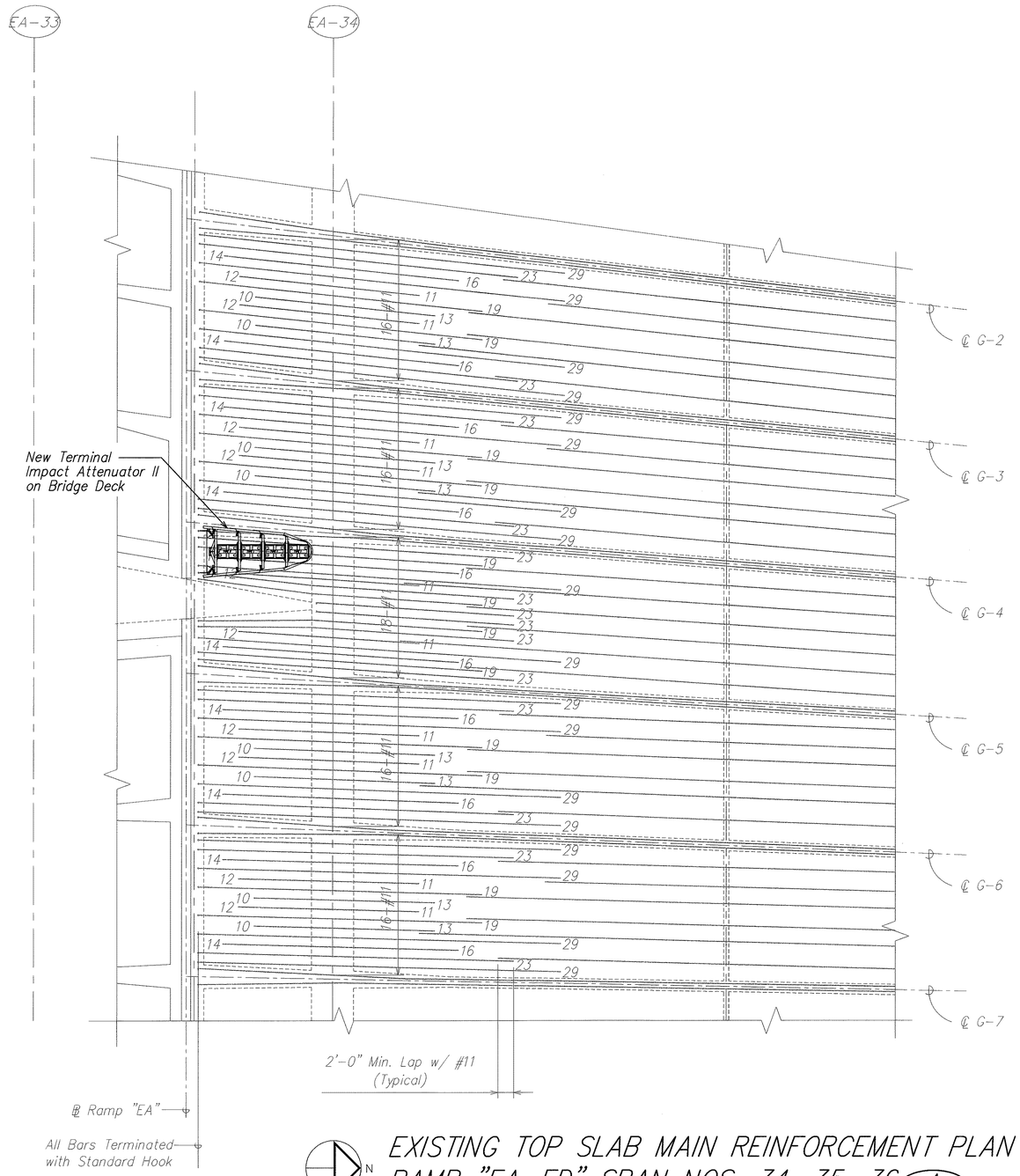

NOTES:

1. All reinforcement #11 unless otherwise noted.
2. Numbers at ends of bars indicate distance in feet from adjacent ℄ pier for top reinf. & ℄ span for bottom reinforcement.
3. All #5 bars extended and lapped with the adjacent #11 bar as shown.
4. All bars to follow curvature of girder where occurs. (See framing plan for true geometry of deck).
5. All reinforcing shown on this sheet are existing bars.

N

EXISTING TOP SLAB MAIN REINFORCEMENT PLAN
RAMP "EA-ED" SPAN NOS. 34, 35, 36

A / S3.3 | S3.4

SCALE: HORIZ. 1/8" = 1'-0
VERT. 1/4" = 1'-0

ORIGINAL PLAN	SURVEY PLOTTED BY	DATE
	DRAWN BY	
NOTE BOOK	TRACED BY	
	DESIGNED BY	
	QUANTITIES BY	
No.	CHECKED BY	

DAVID K. FUJIHARA LICENSED PROFESSIONAL ENGINEER NO. 8104-S HAWAII, U.S.A.

THIS WORK WAS PREPARED BY ME OR UNDER MY SUPERVISION.

SIGNATURE — EXPIRATION DATE OF THE LICENSE 4-30-04

STATE OF HAWAII
DEPARTMENT OF TRANSPORTATION
HIGHWAYS DIVISION

DECK STEEL PLACEMENT DIAG.
AIRPORT INTERCHANGE
INTERSTATE ROUTE H-1
GUARDRAIL AND SHOULDER IMPROVEMENTS
Airport Interchange to Middle Street
Federal Aid Project No. IM-H1-1(240)

SCALE: As Noted DATE: OCTOBER 2003

SHEET No. S3.4 OF 111 SHEETS

FILE: PCGS34.DWG
PLOT: 1 = 1

C:\KSF\GUARDRAIL\10-24-03\PCGS0104.dwg, 10/23/2003 2:55:58 PM, KSFinc.pc3, 1:1

FED. ROAD DIST. NO.	STATE	FED. AID PROJ. NO.	FISCAL YEAR	SHEET NO.	TOTAL SHEETS
HAWAII	HAW.	IM-H1-1(240)	2004	24	143

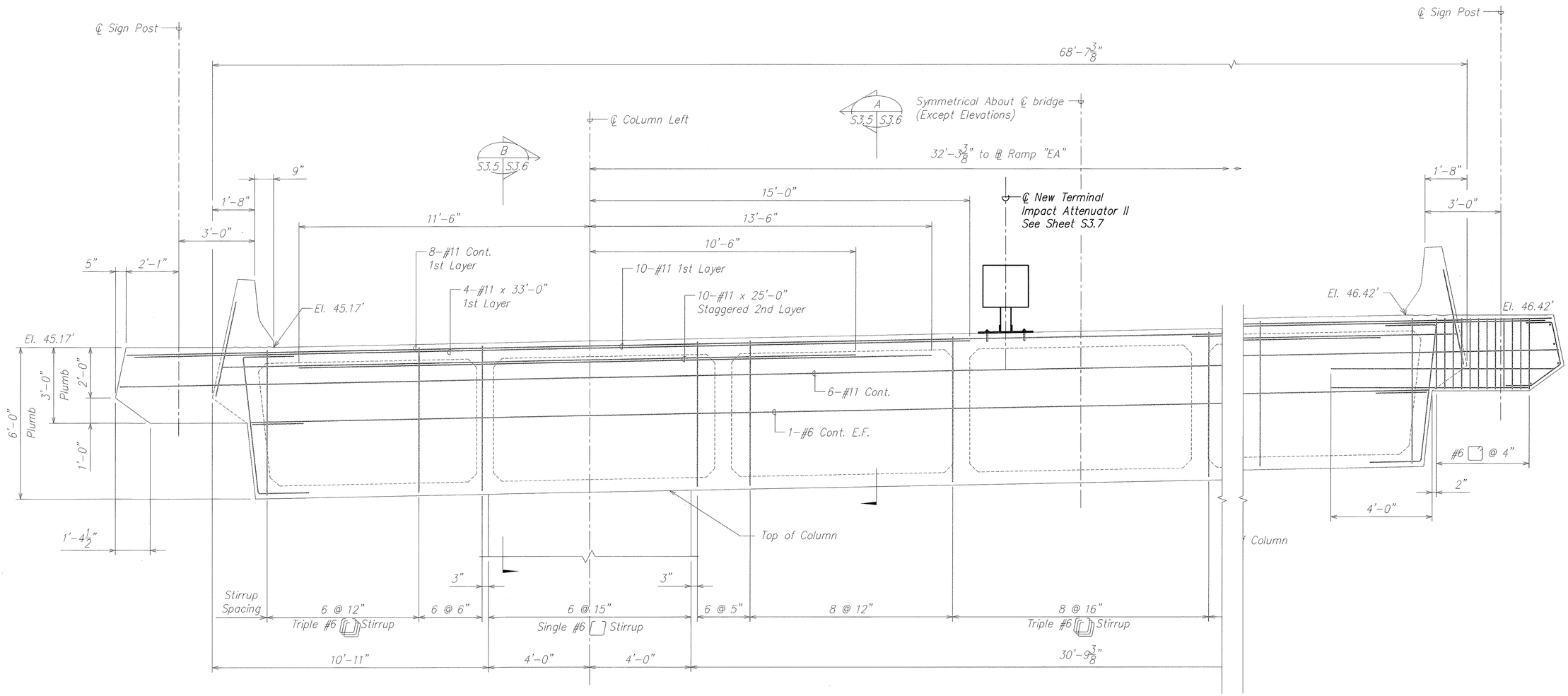

NOTE:

All reinforcing shown on this sheet are existing bars.

EXISTING PIER CAP NO. EA-34

A
S3.5 S3.5

Scale: 1/2" = 1'-0"

ORIGINAL PLAN	SURVEY PLOTTED BY	DATE
	DRAWN BY	
	TRACED BY	
NOTE BOOK	DESIGNED BY	
	QUANTITIES BY	
No.	CHECKED BY	

DAVID K. FUJIWARA
LICENSED PROFESSIONAL ENGINEER
NO. 8104-S
HAWAII, U.S.A.

THIS WORK WAS PREPARED BY ME OR UNDER MY SUPERVISION.

SIGNATURE — EXPIRATION DATE OF THE LICENSE 4-30-04

STATE OF HAWAII
DEPARTMENT OF TRANSPORTATION
HIGHWAYS DIVISION

SECTION
AIRPORT INTERCHANGE
INTERSTATE ROUTE H-1
GUARDRAIL AND SHOULDER IMPROVEMENTS
Airport Interchange to Middle Street
Federal Aid Project No. IM-H1-1(240)

SCALE: As Noted — DATE: OCTOBER 2003

SHEET No. S3.5 OF 111 SHEETS

24

FILE: PCGS35.DWG
PLOT: 1 = 1

C:\KSF\GUARDRAIL\10-24-03\PCGS0305.dwg, 10/23/2003 2:57:03 PM, KSFinc.pc3, 1:1

FED. ROAD DIST. NO.	STATE	FED. AID PROJ. NO.	FISCAL YEAR	SHEET NO.	TOTAL SHEETS
HAWAII	HAW.	IM-H1-1(240)	2004	25	143

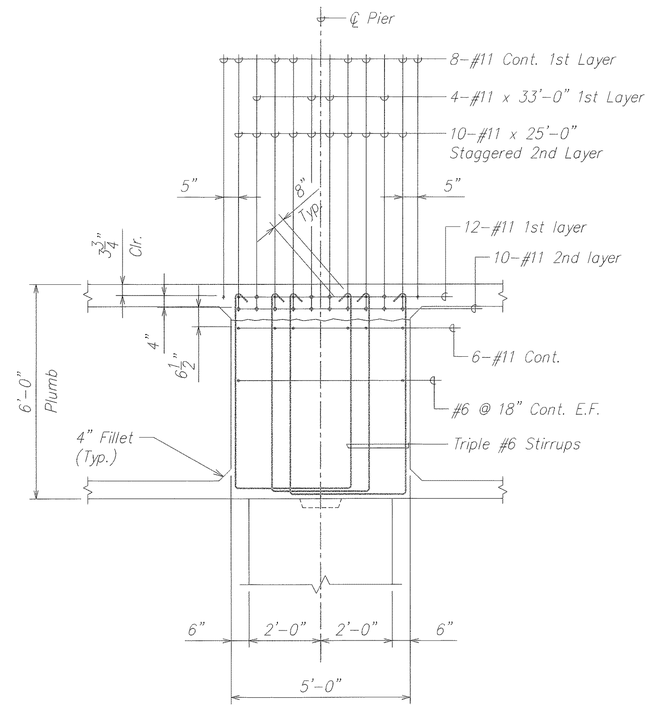

SECTION A
Scale: 1/2" = 1'-0"
S3.5 | S3.6

NOTE:

All reinforcing shown on this sheet are existing bars.

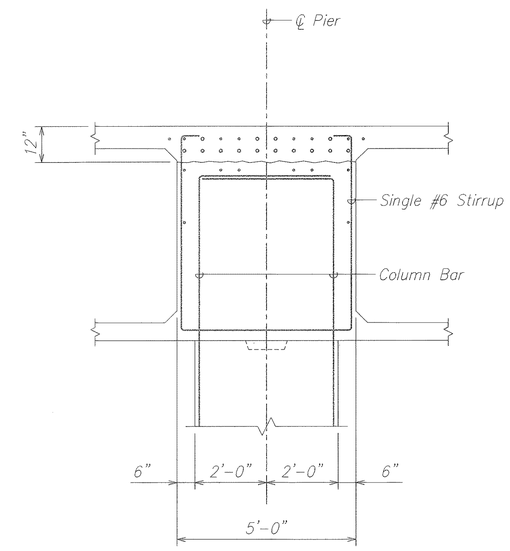

SECTION AT COLUMN B
Scale: 1/2" = 1'-0"
S3.5 | S3.6

ORIGINAL PLAN
NOTE BOOK No.
SURVEY PLOTTED BY
DRAWN BY
TRACED BY
DESIGNED BY
QUANTITIES BY
CHECKED BY
DATE

DAVID K. FUJIWARA
LICENSED PROFESSIONAL ENGINEER
NO. 8104-S
HAWAII, U.S.A.

THIS WORK WAS PREPARED BY ME OR UNDER MY SUPERVISION.

SIGNATURE — EXPIRATION DATE OF THE LICENSE 4-30-04

STATE OF HAWAII
DEPARTMENT OF TRANSPORTATION
HIGHWAYS DIVISION

SECTIONS
AIRPORT INTERCHANGE
INTERSTATE ROUTE H-1
GUARDRAIL AND SHOULDER IMPROVEMENTS
Airport Interchange to Middle Street
Federal Aid Project No. IM-H1-1(240)

SCALE: As Noted — DATE: OCTOBER 2003

SHEET No. S3.6 OF 111 SHEETS

FILE: PCCS36.DWG
PLOT: 1 = 1

C:\KSF\GUARDRAIL\10-24-03\PCCS0306.dwg, 10/23/2003 2:57:48 PM, KSFinc.pc3, 1:1

FED. ROAD DIST. NO.	STATE	FED. AID PROJ. NO.	FISCAL YEAR	SHEET NO.	TOTAL SHEETS
HAWAII	HAW.	IM-H1-1(240)	2004	ADD. 26	143

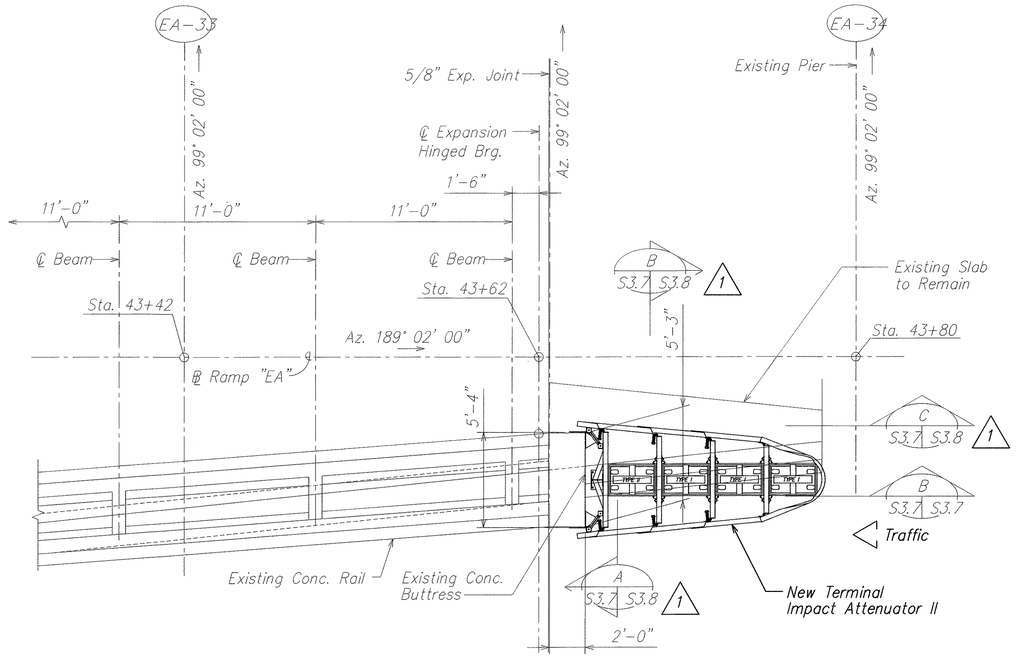

PLAN (A S3.7 S3.7)

SCALE: 1/4" = 1'-0"

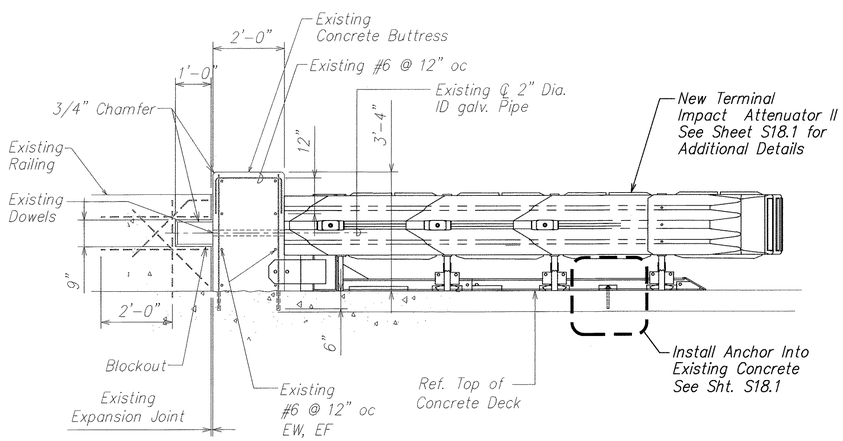

SECTION (B S3.7 S3.7)

Scale: 1/2" = 1'-0"

DATE	REVISION
12/09/03	1 Revise Section Cut

DAVID K. FUJIWARA LICENSED PROFESSIONAL ENGINEER NO. 8104-S HAWAII, U.S.A.

THIS WORK WAS PREPARED BY ME OR UNDER MY SUPERVISION.

SIGNATURE — EXPIRATION DATE OF THE LICENSE 4-30-04

STATE OF HAWAII
DEPARTMENT OF TRANSPORTATION
HIGHWAYS DIVISION

DETAIL PLAN & ELEVATION
AIRPORT INTERCHANGE
INTERSTATE ROUTE H-1
GUARDRAIL AND SHOULDER IMPROVEMENTS
Airport Interchange to Middle Street
Federal Aid Project No. IM-H1-1(240)

SCALE: As Noted — DATE: OCTOBER 2003

SHEET No. S3.7 OF 111 SHEETS

ADD. 26

ORIGINAL PLAN — NOTE BOOK No. — SURVEY PLOTTED BY — DRAWN BY — TRACED BY — DESIGNED BY — QUANTITIES BY — CHECKED BY — DATE

FILE: PCGS37.DWG
PLOT: 1 = 1

\\Cad1\ksf\2000\0066-H1 GUARDRAIL\12-08-03 ADD1\ADD1 PCGS0307.dwg, 12/8/2003 9:14:43 AM, KSFinc.pc3, 1:1

FED. ROAD DIST. NO.	STATE	FED. AID PROJ. NO.	FISCAL YEAR	SHEET NO.	TOTAL SHEETS
HAWAII	HAW.	IM-H1-1(240)	2004	29	143

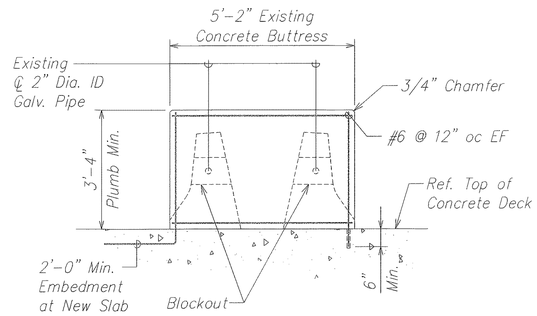

EXISTING CONCRETE BUTTRESS ELEVATION (A / S3.7 | S3.8)

SCALE: 1/2" = 1'-0"

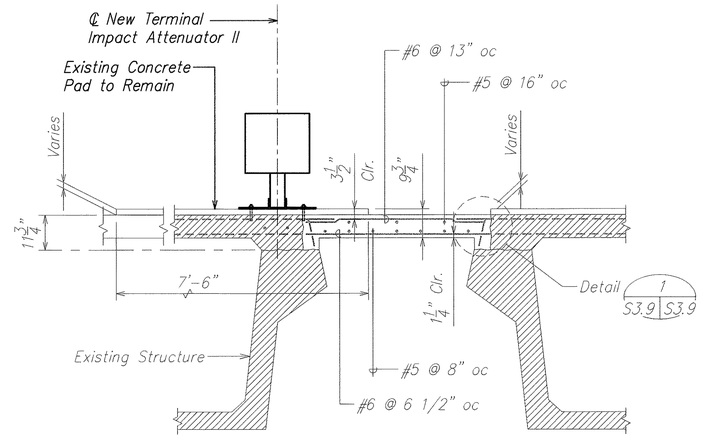

NOTE:
All reinforcing shown on this sheet are existing bars.

EXISTING CONCRETE SLAB SECTION (B / S3.7 | S3.8)

SCALE: 1/2" = 1'-0"

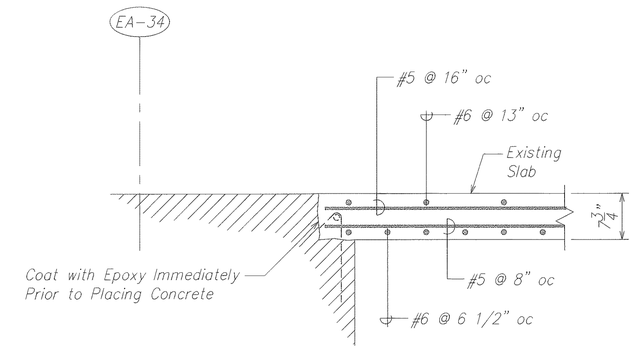

EXISTING CONCRETE SLAB SECTION (C / S3.7 | S3.8)

SCALE: 1" = 1'-0"

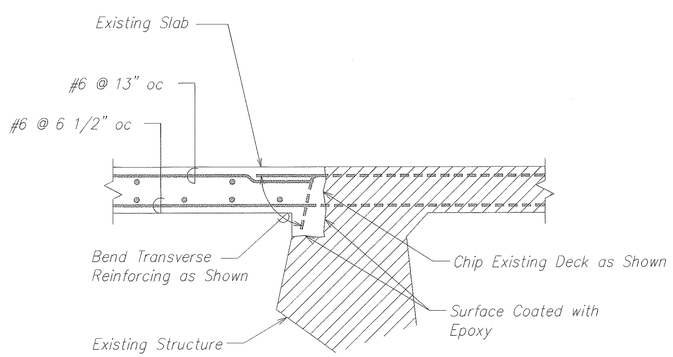

EXISTING CONCRETE DETAIL (1 / S3.8 | S3.8)

SCALE: 1" = 1'-0"

ORIGINAL PLAN	SURVEY PLOTTED BY	DATE
	DRAWN BY	
NOTE BOOK	PLOTTED BY	
	DESIGNED BY	
	QUANTITIES BY	
No.	CHECKED BY	

DAVID K. FUJIWARA LICENSED PROFESSIONAL ENGINEER NO. 8104-S HAWAII, U.S.A.

THIS WORK WAS PREPARED BY ME OR UNDER MY SUPERVISION.

SIGNATURE — EXPIRATION DATE OF THE LICENSE 4-30-04

STATE OF HAWAII
DEPARTMENT OF TRANSPORTATION
HIGHWAYS DIVISION

SECTIONS
AIRPORT INTERCHANGE
INTERSTATE ROUTE H-1
GUARDRAIL AND SHOULDER IMPROVEMENTS
Airport Interchange to Middle Street
Federal Aid Project No. IM-H1-1(240)

SCALE: As Noted — DATE: OCTOBER 2003

SHEET No. S3.8 OF 111 SHEETS

FILE: PCCS39.DWG
PLOT: 1 = 1

C:\KSF\GUARDRAIL\10-24-03\PCCSO308.dwg, 10/23/2003 3:00:20 PM, KSFinc.pc3, 1:1

FED. ROAD DIST. NO.	STATE	FED. AID PROJ. NO.	FISCAL YEAR	SHEET NO.	TOTAL SHEETS
HAWAII	HAW.	IM-H1-1(240)	2004	28	143

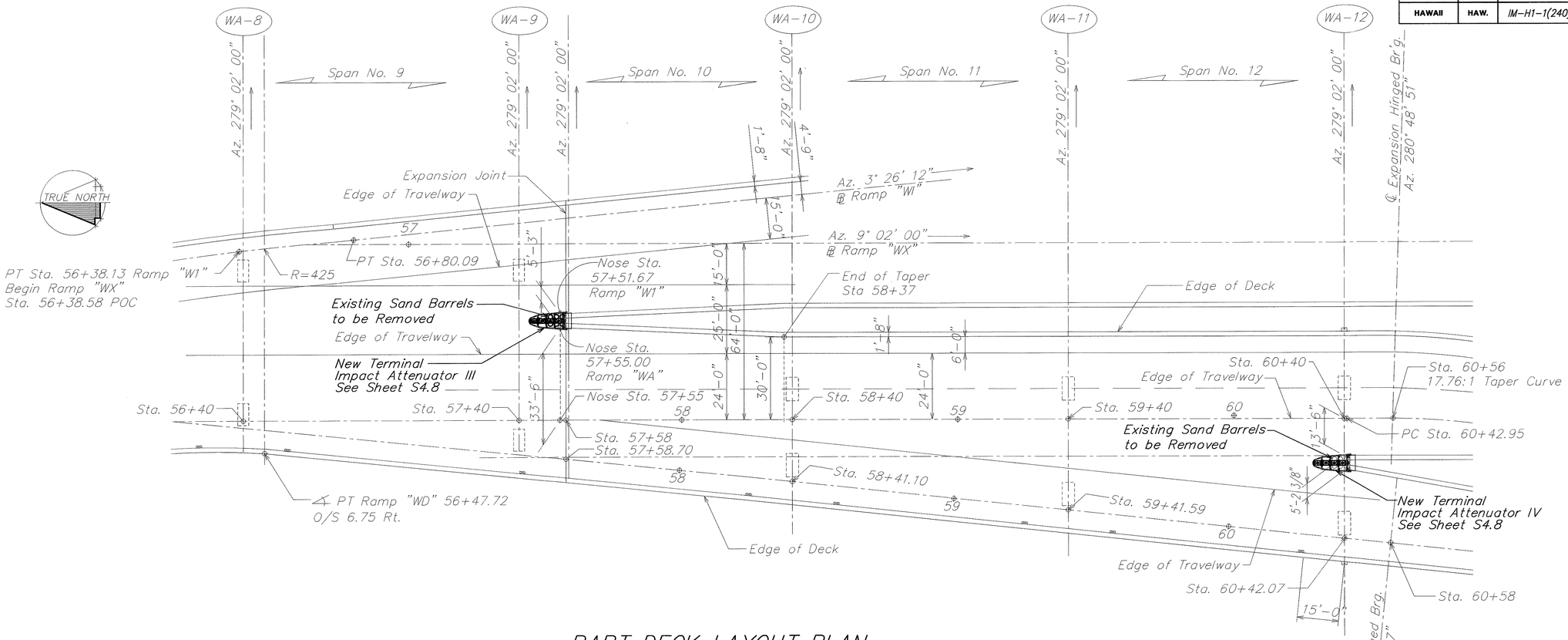

PART DECK LAYOUT PLAN

SCALE: 1"=20'

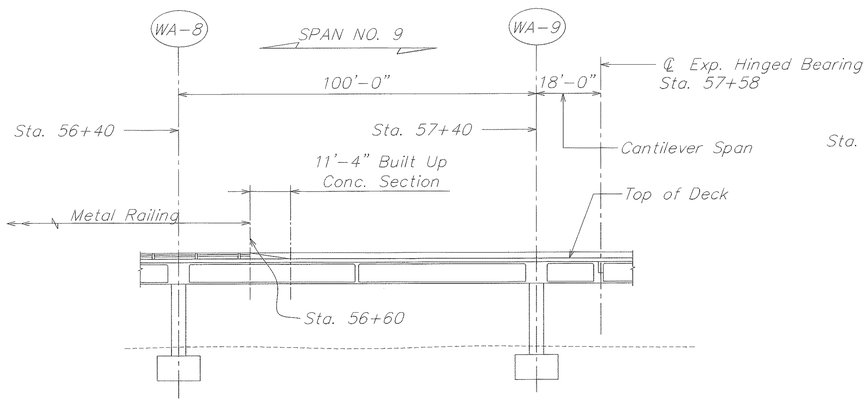

PART LONGITUDINAL SECTION ALONG ℄ RAMP "WA"

SCALE: 1"=20'

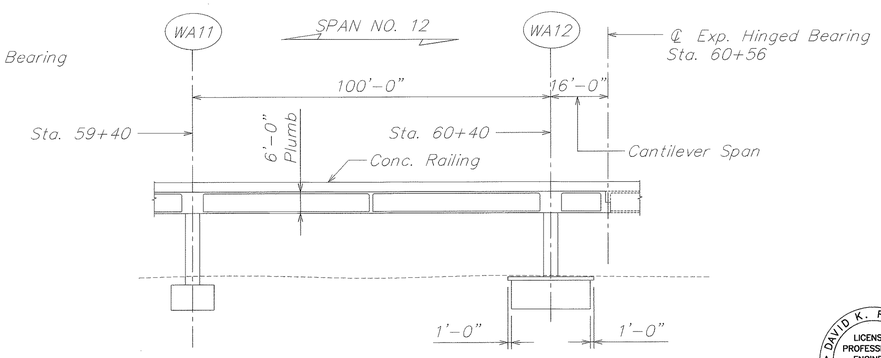

PART LONGITUDINAL SECTION ALONG ℄ RAMP "WA"

SCALE: 1"=20'

ORIGINAL PLAN	SURVEY PLOTTED BY	DATE
	DRAWN BY	
NOTE BOOK	TRACED BY	
	DESIGNED BY	
No.	QUANTITIES BY	
	CHECKED BY	

DAVID K. FUJIWARA LICENSED PROFESSIONAL ENGINEER NO. 8104-S HAWAII, U.S.A.

THIS WORK WAS PREPARED BY ME OR UNDER MY SUPERVISION.

SIGNATURE — EXPIRATION DATE OF THE LICENSE 4-30-04

STATE OF HAWAII
DEPARTMENT OF TRANSPORTATION
HIGHWAYS DIVISION

PLAN AND SECTION
AIRPORT VIADUCT
INTERSTATE ROUTE H-1
GUARDRAIL AND SHOULDER IMPROVEMENTS
Airport Interchange to Middle Street
Federal Aid Project No. IM-H1-1(240)

SCALE: As Noted — DATE: OCTOBER 2003

SHEET No. S4.1 OF 111 SHEETS

FILE: PCGS41.DWG
PLOT: 1 = 1

C:\KSF\GUARDRAIL\10-24-03\PCGS0401.dwg, 10/23/2003 3:01:35 PM, KSFinc.pc3, 1:1

FED. ROAD DIST. NO.	STATE	FED. AID PROJ. NO.	FISCAL YEAR	SHEET NO.	TOTAL SHEETS
HAWAII	HAW.	IM-H1-1(240)	2004	29	143

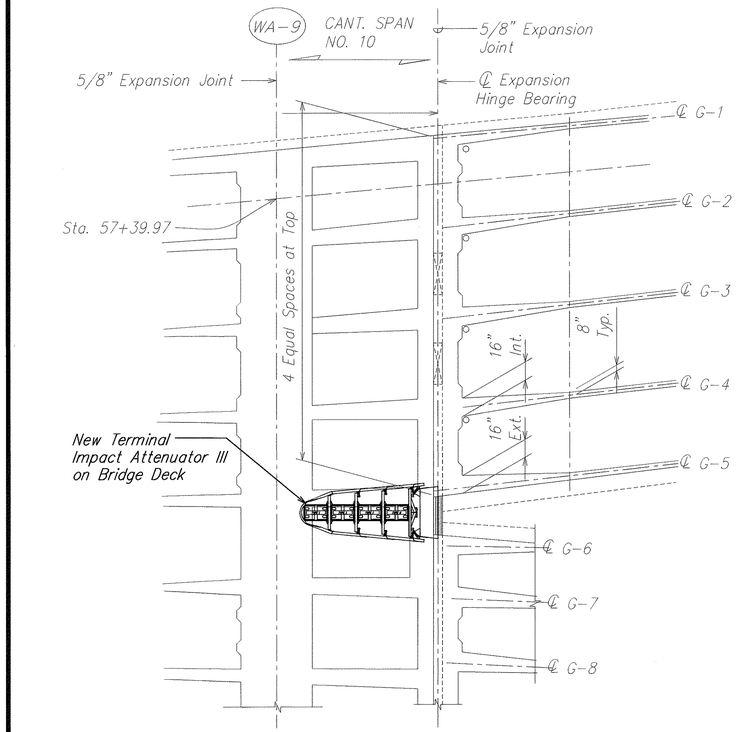

EXISTING PARTIAL DECK FRAMING PLAN

SCALE: HORIZ. 1/8"=1'-0" VERT. 1/4"=1'-0"

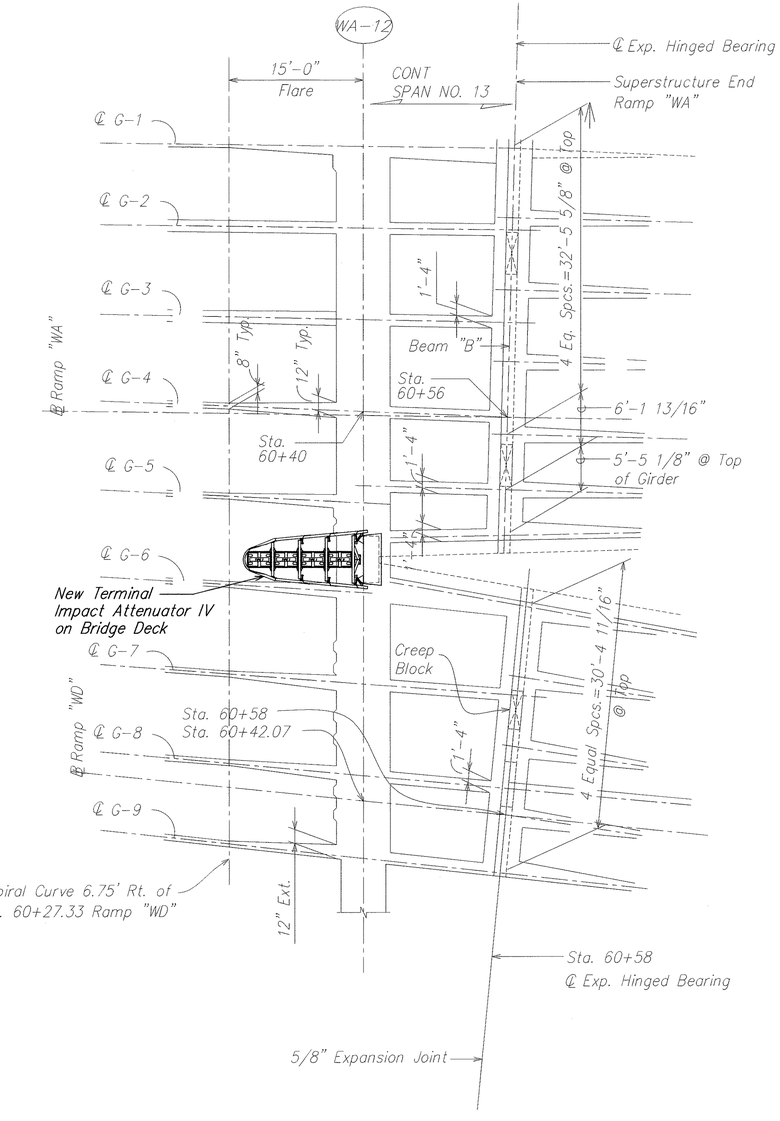

EXISTING PARTIAL DECK FRAMING PLAN

SCALE: 1/8=1'-0"

ORIGINAL PLAN	SURVEY PLOTTED BY	DATE
	DRAWN BY	
	TRACED BY	
NOTE BOOK	DESIGNED BY	
	QUANTITIES BY	
No.	CHECKED BY	

DAVID K. FUJIWARA LICENSED PROFESSIONAL ENGINEER NO. 8104-S HAWAII, U.S.A.

THIS WORK WAS PREPARED BY ME OR UNDER MY SUPERVISION.

SIGNATURE — EXPIRATION DATE OF THE LICENSE 4-30-04

STATE OF HAWAII
DEPARTMENT OF TRANSPORTATION
HIGHWAYS DIVISION

DECK FRAMING PLANS
AIRPORT VIADUCT
INTERSTATE ROUTE H-1
GUARDRAIL AND SHOULDER IMPROVEMENTS
Airport Interchange to Middle Street
Federal Aid Project No. IM-H1-1(240)

SCALE: As Noted DATE: OCTOBER 2003

SHEET No. S4.2 OF 111 SHEETS

FILE: PCGS42.DWG
PLOT: 1 = 1

C:\KSF\GUARDRAIL\10-24-03\PCGS0402.dwg, 10/23/2003 3:02:37 PM, KSFinc.pc3, 1:1

FED. ROAD DIST. NO.	STATE	FED. AID PROJ. NO.	FISCAL YEAR	SHEET NO.	TOTAL SHEETS
HAWAII	HAW.	IM-H1-1(240)	2004	30	143

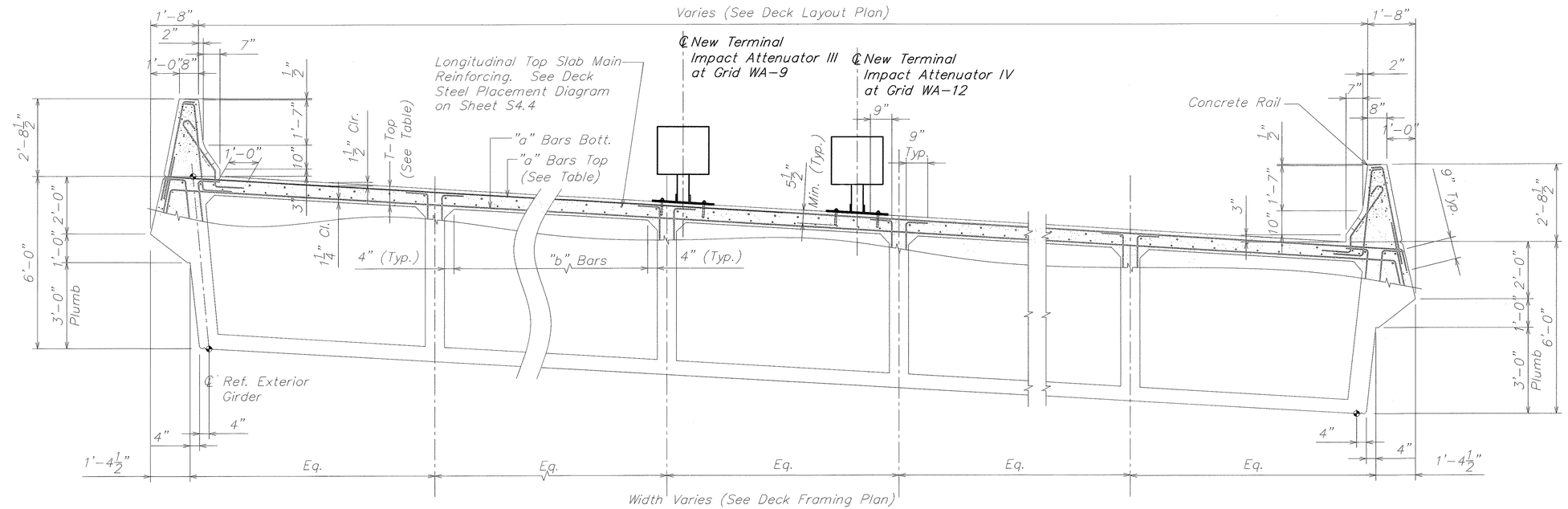

EXISTING DECK SECTION NORMAL TO ℄ RAMP "WA"
STA. 48+61.13 TO STA. 49+54 AND STA. 51+64 TO STA. 60+56

SCALE: 1/2" = 1'-0"

A
S4.3 | S4.3

SLAB REINFORCING AND THICKNESS					
SPAN	Station Along ℄	T Top	T Bott.	"a" Bars	"b" Bars
9 & 10	56+40 to 57+58	8"	7 1/8"	#6 @ 6 1/2"	#5 @ 7"
12 & 13	59+40 to 60+56	8"	7 1/8"	#6 @ 6 1/2"	#5 @ 7"

ORIGINAL PLAN
NOTE BOOK No.
SURVEY PLOTTED BY
DRAWN BY
TRACED BY
DESIGNED BY
QUANTITIES BY
CHECKED BY
DATE

DAVID K. FUJIWARA
LICENSED PROFESSIONAL ENGINEER
NO. 8104-S
HAWAII, U.S.A.

THIS WORK WAS PREPARED BY ME OR UNDER MY SUPERVISION.

SIGNATURE — EXPIRATION DATE OF THE LICENSE 4-30-04

STATE OF HAWAII
DEPARTMENT OF TRANSPORTATION
HIGHWAYS DIVISION

SECTION
AIRPORT VIADUCT
INTERSTATE ROUTE H-1
GUARDRAIL AND SHOULDER IMPROVEMENTS
Airport Interchange to Middle Street
Federal Aid Project No. IM-H1-1(240)

SCALE: As Noted — DATE: OCTOBER 2003

SHEET No. S4.3 OF 111 SHEETS

FILE: PCGS43.DWG
PLOT: 1 = 1

C:\KSF\GUARDRAIL\10-24-03\PCGS0403.dwg, 10/23/2003 3:05:13 PM, KSFinc.pc3, 1:1

FED. ROAD DIST. NO.	STATE	FED. AID PROJ. NO.	FISCAL YEAR	SHEET NO.	TOTAL SHEETS
HAWAII	HAW.	IM-H1-1(240)	2004	31	143

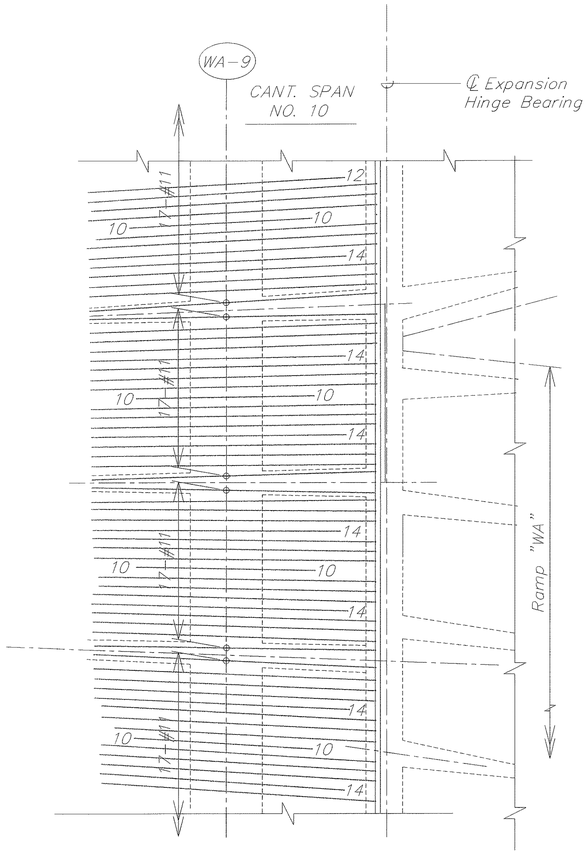

PARTIAL EXISTING TOP DECK STEEL PLAN (B)

SCALE: HOR. 1/8"=1'-0" VERT. 1/8"=1'-0"

S4.4 | S4.4

NOTES:

1. All reinforcement #11 unless otherwise noted
2. Numbers @ ends of bars indicate distance in feet from adjacent center line pier for top reinforcement.
3. For additional slab reinforcing details, see normal deck section sht. S4.3
4. All # 5 bars extended and lapped with the adjacent # 11 bars as shown.
5. All bars to follow curvature of girders where occurs. (see framing plan for true geometry of decks)

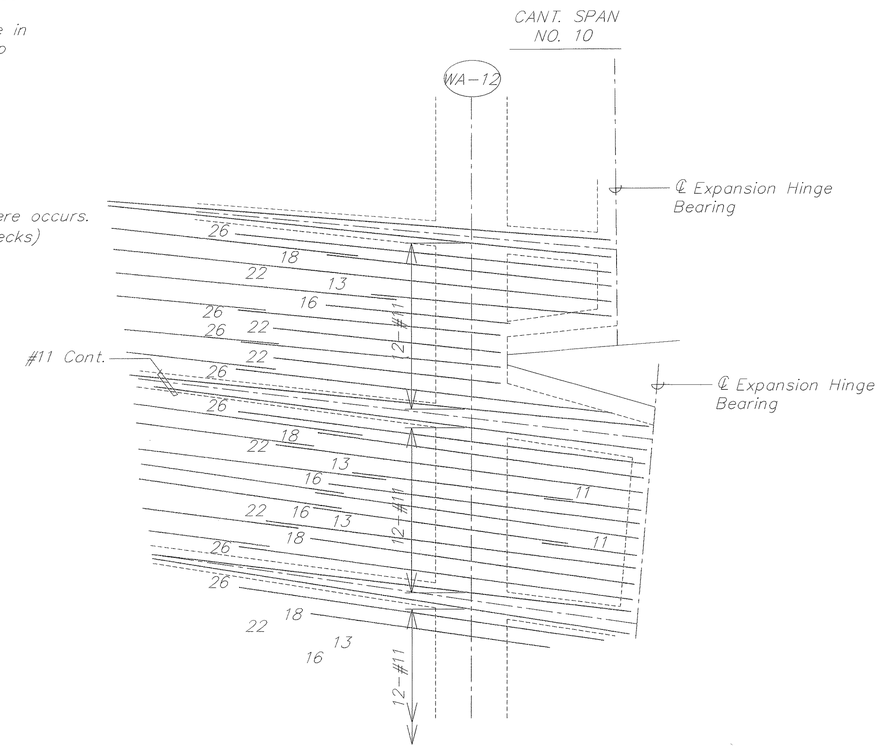

PARTIAL EXISTING TOP DECK STEEL PLAN (A)

SCALE: HORIZ. 1/8"=1'-0" VERT. 1/4"=1'-0"

S4.4 | S4.4

ORIGINAL PLAN	SURVEY PLOTTED BY	DATE
	DRAWN BY	
NOTE BOOK	TRACED BY	
	DESIGNED BY	
	QUANTITIES BY	
No.	CHECKED BY	

DAVID K. FUJIWARA LICENSED PROFESSIONAL ENGINEER NO. 8104-S HAWAII, U.S.A.

THIS WORK WAS PREPARED BY ME OR UNDER MY SUPERVISION.

SIGNATURE — EXPIRATION DATE OF THE LICENSE 4-30-04

STATE OF HAWAII
DEPARTMENT OF TRANSPORTATION
HIGHWAYS DIVISION

PARTIAL REINFORCING PLANS
AIRPORT VIADUCT
INTERSTATE ROUTE H-1
GUARDRAIL AND SHOULDER IMPROVEMENTS
Airport Interchange to Middle Street
Federal Aid Project No. IM-H1-1(240)

SCALE: As Noted DATE: OCTOBER 2003

SHEET No. S4.4 OF 111 SHEETS

FILE: PCGS44.DWG
PLOT: 1 = 1

C:\KSF\GUARDRAIL\10-24-03\PCGS0404.dwg, 10/23/2003 3:05:58 PM, KSFinc.pc3, 1:1

FED. ROAD DIST. NO.	STATE	FED. AID PROJ. NO.	FISCAL YEAR	SHEET NO.	TOTAL SHEETS
HAWAII	HAW.	IM-H1-1(240)	2004	32	143

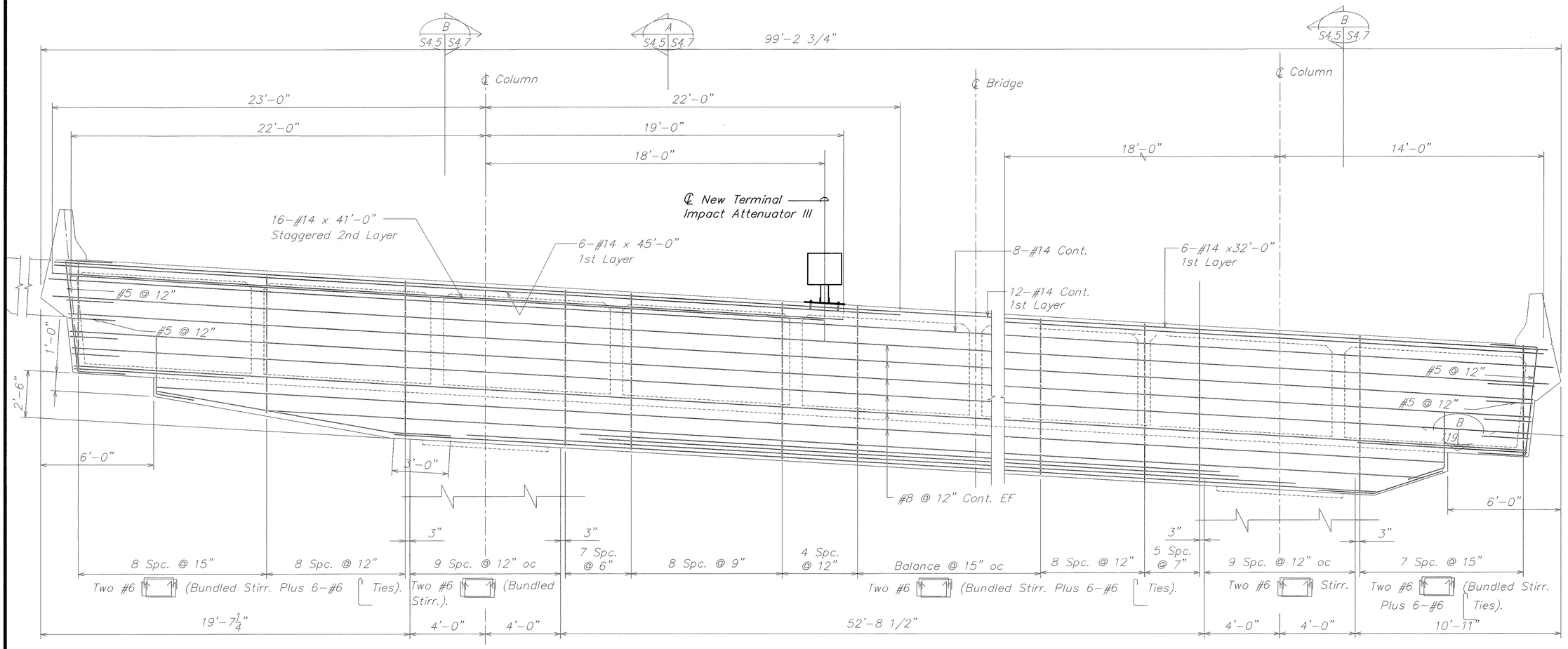

Fc'=3 000 psi

EXISTING PIER CAP NO. "WA-9"

A
S4.5 S4.5

SCALE: 3/8" = 1'-0"

SURVEY PLOTTED BY	DATE
DRAWN BY	
TRACED BY	
DESIGNED BY	
QUANTITIES BY	
CHECKED BY	

ORIGINAL PLAN
NOTE BOOK No.

DAVID K. FUJIWARA
LICENSED PROFESSIONAL ENGINEER
NO. 8104-S
HAWAII, U.S.A.

THIS WORK WAS PREPARED BY ME OR UNDER MY SUPERVISION.

SIGNATURE — EXPIRATION DATE OF THE LICENSE 4-30-04

STATE OF HAWAII
DEPARTMENT OF TRANSPORTATION
HIGHWAYS DIVISION

SECTION
AIRPORT VIADUCT
INTERSTATE ROUTE H-1
GUARDRAIL AND SHOULDER IMPROVEMENTS
Airport Interchange to Middle Street
Federal Aid Project No. IM-H1-1(240)

SCALE: As Noted — DATE: OCTOBER 2003

SHEET No. S4.5 OF 111 SHEETS

FILE: PCCS45.DWG
PLOT: 1 = 1

C:\KSF\GUARDRAIL\10-24-03\PCCS0405.dwg, 10/23/2003 3:06:53 PM, KSFinc.pc3, 1:1

FED. ROAD DIST. NO.	STATE	FED. AID PROJ. NO.	FISCAL YEAR	SHEET NO.	TOTAL SHEETS
HAWAII	HAW.	IM-H1-1(240)	2004	33	143

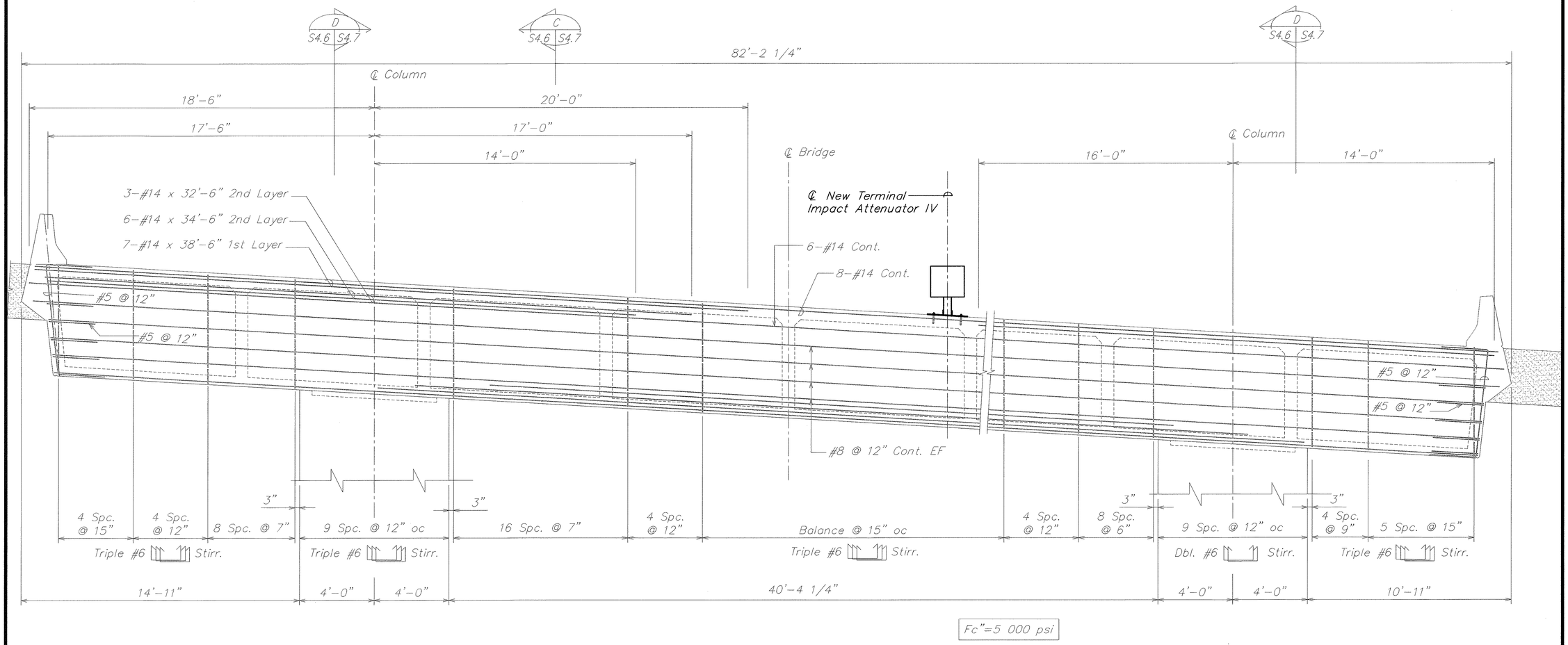

EXISTING PIER CAP NO. "WA-12"

A
S4.6 S4.6

SCALE: 3/8" = 1'-0"

ORIGINAL PLAN	SURVEY PLOTTED BY	DATE
	DRAWN BY	
	TRACED BY	
NOTE BOOK	DESIGNED BY	
	QUANTITIES BY	
No.	CHECKED BY	

DAVID K. FUJIWARA
LICENSED PROFESSIONAL ENGINEER
NO. 8104-S
HAWAII, U.S.A.

THIS WORK WAS PREPARED BY ME OR UNDER MY SUPERVISION.

SIGNATURE — EXPIRATION DATE OF THE LICENSE 4-30-04

STATE OF HAWAII
DEPARTMENT OF TRANSPORTATION
HIGHWAYS DIVISION

SECTION
AIRPORT VIADUCT
INTERSTATE ROUTE H-1
GUARDRAIL AND SHOULDER IMPROVEMENTS
Airport Interchange to Middle Street
Federal Aid Project No. IM-H1-1(240)

SCALE: As Noted — DATE: OCTOBER 2003

SHEET No. S4.6 OF 111 SHEETS

FILE: PCGS46.DWG
PLOT: 1 = 1

C:\KSF\GUARDRAIL\10-24-03\PCGS0406.dwg, 10/23/2003 3:07:43 PM, KSFinc.pc3, 1:1

FED. ROAD DIST. NO.	STATE	FED. AID PROJ. NO.	FISCAL YEAR	SHEET NO.	TOTAL SHEETS
HAWAII	HAW.	IM-H1-1(240)	2004	34	143

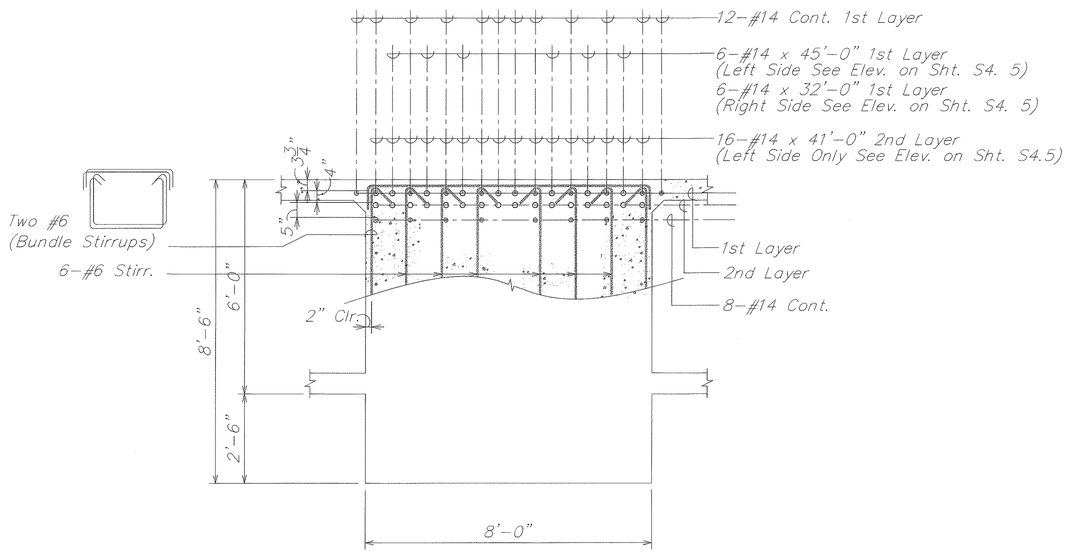

SECTION EXISTING PIER CAP WA-9 (A / S4.5 | S4.7)

SCALE: 1/2" = 1'-0"

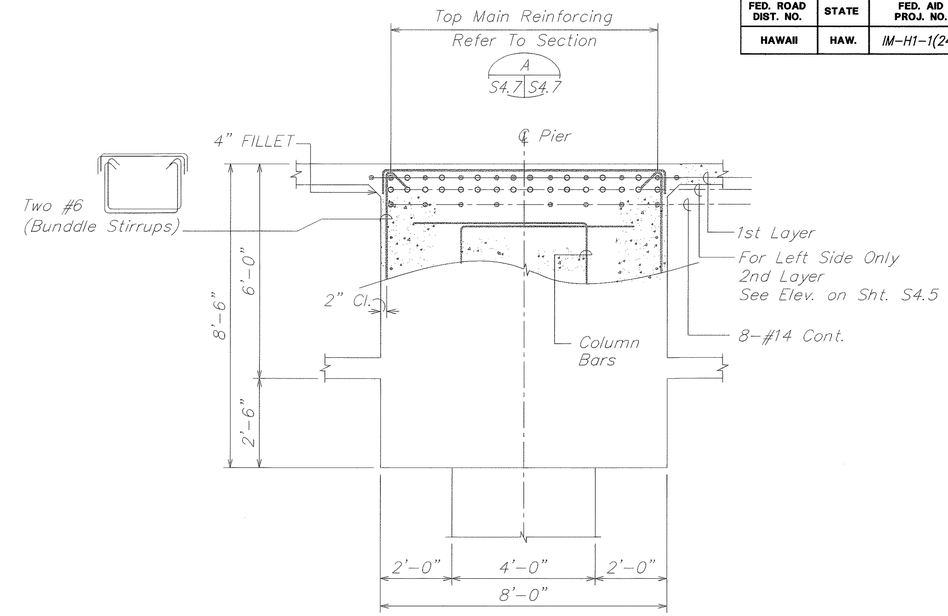

SECTION EXISTING PIER CAP WA-9 (B / S4.5 | S4.7)

SCALE: 1/2" = 1'-0"

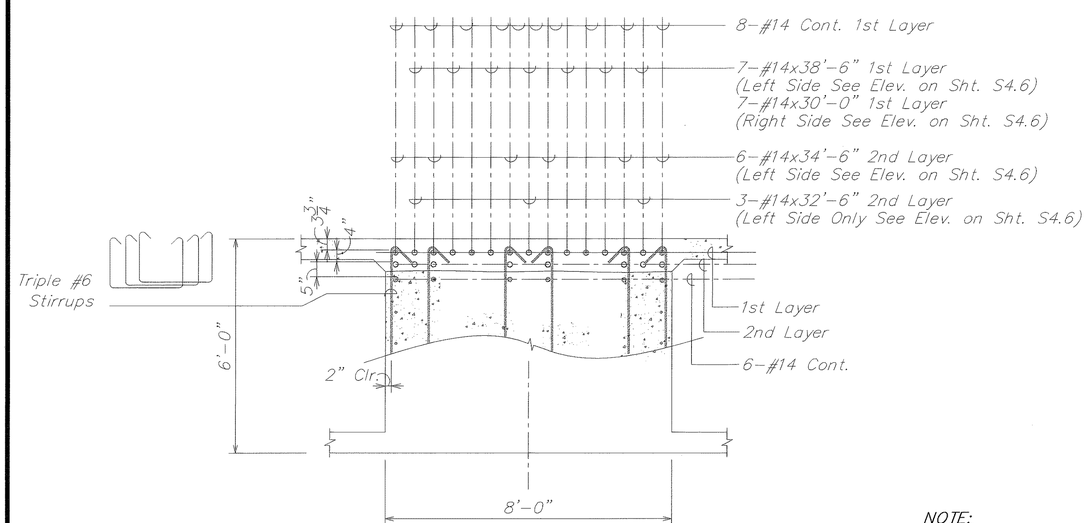

SECTION EXISTING PIER CAP WA-12 (C / S4.6 | S4.7)

SCALE: 1/2" = 1'-0"

NOTE:
All reinforcing shown on this sheet are existing bars.

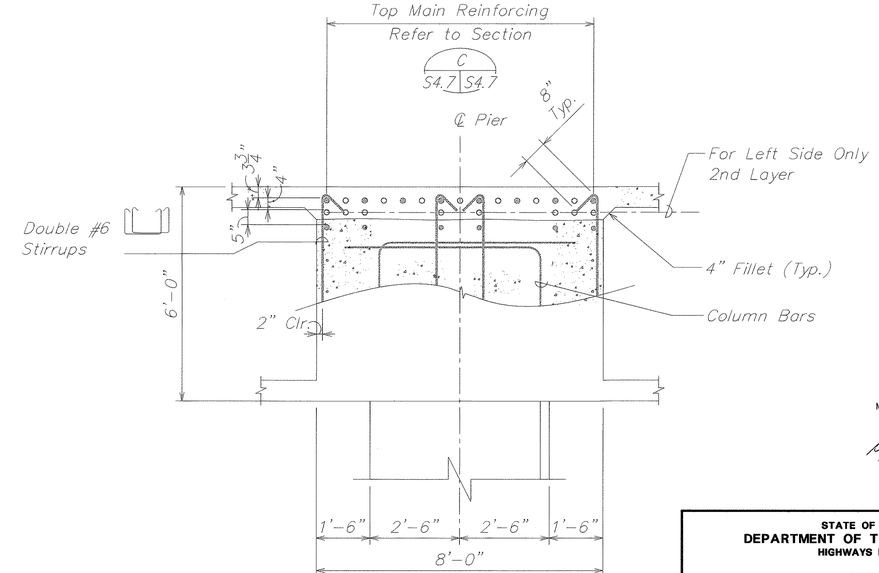

SECTION EXISTING PIER CAP WA-12 (D / S4.6 | S4.7)

SCALE: 1/2" = 1'-0"

DAVID K. FUJIWARA
LICENSED PROFESSIONAL ENGINEER
NO. 8104-S
HAWAII, U.S.A.

THIS WORK WAS PREPARED BY ME OR UNDER MY SUPERVISION.

SIGNATURE — EXPIRATION DATE OF THE LICENSE 4-30-04

STATE OF HAWAII
DEPARTMENT OF TRANSPORTATION
HIGHWAYS DIVISION

SECTIONS
AIRPORT VIADUCT
INTERSTATE ROUTE H-1
GUARDRAIL AND SHOULDER IMPROVEMENTS
Airport Interchange to Middle Street
Federal Aid Project No. IM-H1-1(240)

SCALE: As Noted — DATE: OCTOBER 2003

SHEET No. S4.7 OF 111 SHEETS

ORIGINAL PLAN — SURVEY PLOTTED BY / DRAWN BY / TRACED BY / DESIGNED BY / QUANTITIES BY / CHECKED BY — DATE
NOTE BOOK No.

FILE: PCCS47.DWG
PLOT: 1 = 1

C:\KSF\GUARDRAIL\10-24-03\PCCS0407.dwg, 10/23/2003 3:08:31 PM, KSFinc.pc3, 1:1

FED. ROAD DIST. NO.	STATE	FED. AID PROJ. NO.	FISCAL YEAR	SHEET NO.	TOTAL SHEETS
HAWAII	HAW.	IM-H1-1(240)	2004	35	143

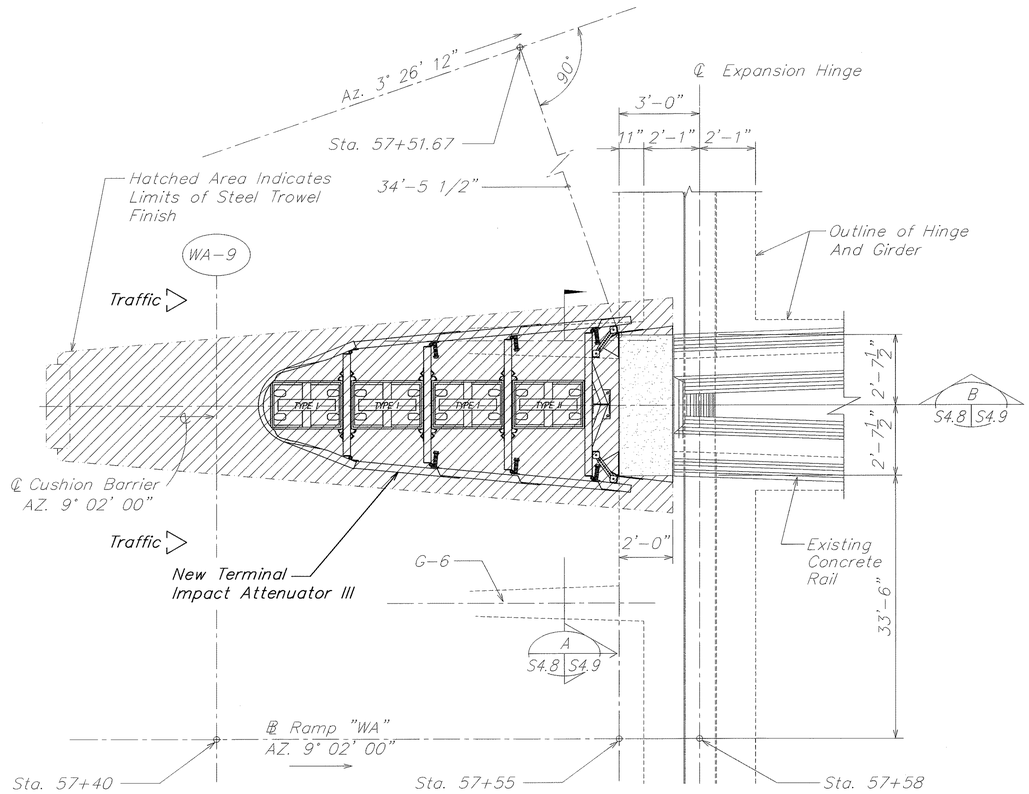

PLAN (A S4.8 S4.8)

SCALE: 3/8" = 1'-0"

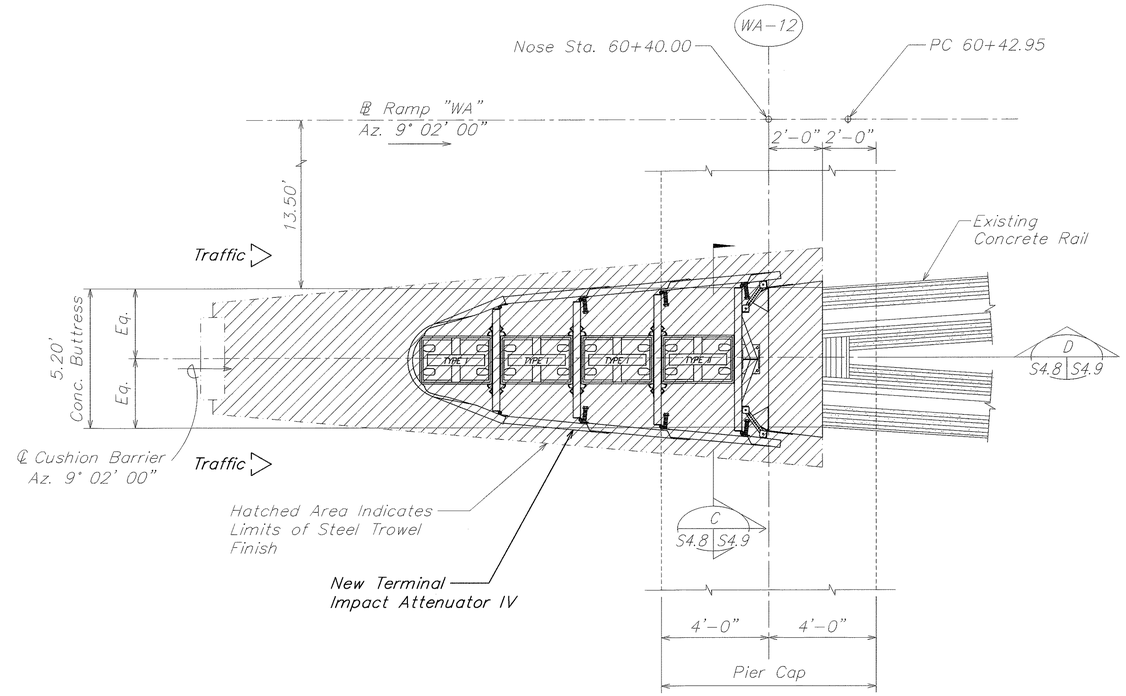

PLAN (B S4.8 S4.8)

SCALE: 3/8" = 1'-0"

ORIGINAL PLAN	SURVEY PLOTTED BY	DATE
	DRAWN BY	
NOTE BOOK	TRACED BY	
	DESIGNED BY	
	QUANTITIES BY	
No.	CHECKED BY	

DAVID K. FUJIWARA LICENSED PROFESSIONAL ENGINEER NO. 8104-S HAWAII, U.S.A.

THIS WORK WAS PREPARED BY ME OR UNDER MY SUPERVISION.

David K. Fujiwara 4-30-04

SIGNATURE EXPIRATION DATE OF THE LICENSE

STATE OF HAWAII
DEPARTMENT OF TRANSPORTATION
HIGHWAYS DIVISION

PLANS
AIRPORT VIADUCT
INTERSTATE ROUTE H-1
GUARDRAIL AND SHOULDER IMPROVEMENTS
Airport Interchange to Middle Street
Federal Aid Project No. IM-H1-1(240)

SCALE: As Noted DATE: OCTOBER 2003

SHEET No. S4.8 OF 111 SHEETS

FILE: PCGS48.DWG
PLOT: 1 = 1

C:\KSF\GUARDRAIL\10-24-03\PCGS0408.dwg, 10/23/2003 3:10:30 PM, KSFinc.pc3, 1:1

FED. ROAD DIST. NO.	STATE	FED. AID PROJ. NO.	FISCAL YEAR	SHEET NO.	TOTAL SHEETS
HAWAII	HAW.	IM-H1-1(240)	2004	36	143

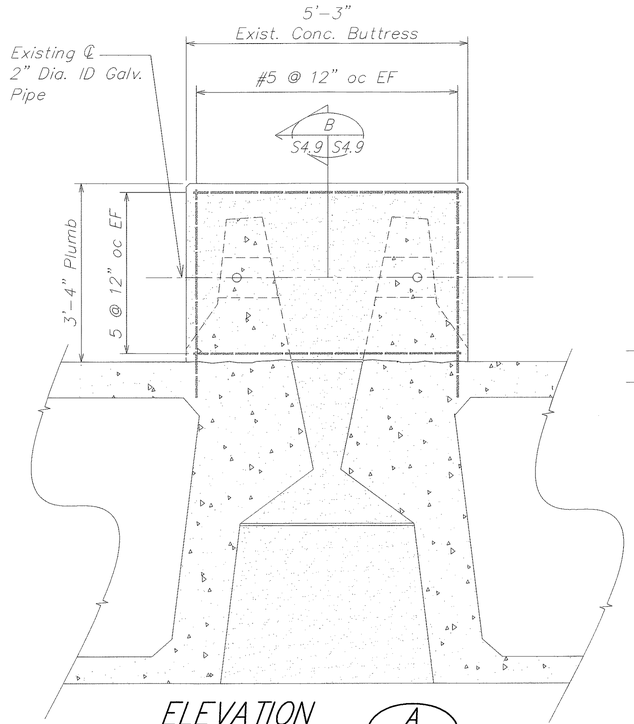

ELEVATION A
SCALE: 3/4"=1'-0" S4.8 S4.9

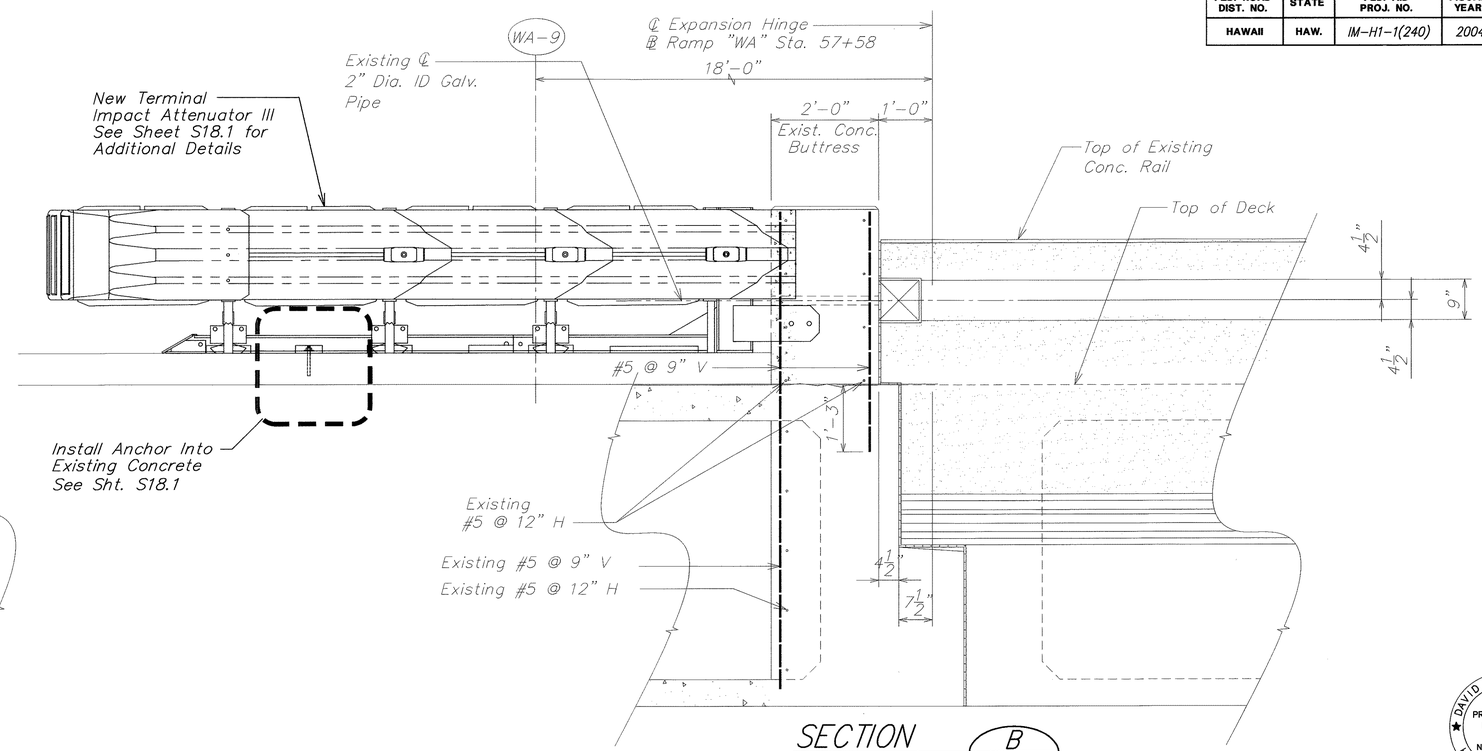

SECTION B
SCALE: 3/4"=1'-0" S4.8 S4.9

DAVID K. FUJIWARA
LICENSED PROFESSIONAL ENGINEER
NO. 8104-S
HAWAII, U.S.A.

THIS WORK WAS PREPARED BY ME OR UNDER MY SUPERVISION.

SIGNATURE — EXPIRATION DATE OF THE LICENSE 4-30-04

NOTE:

All reinforcing shown on this sheet are existing bars.

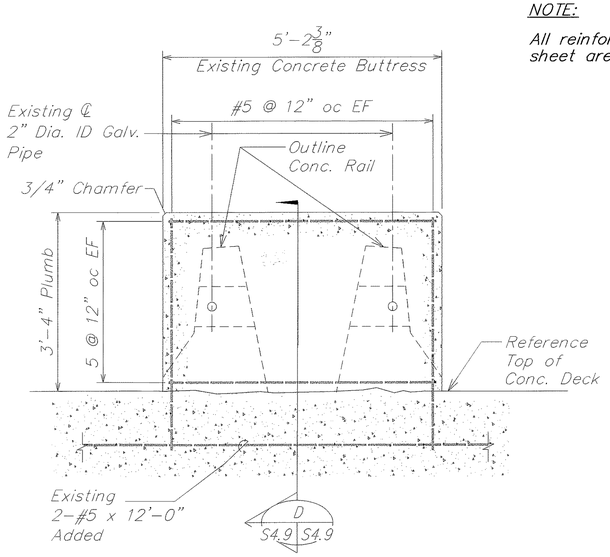

EXISTING CONCRETE ELEVATION C
SCALE: 3/4"=1'-0" S4.8 S4.9

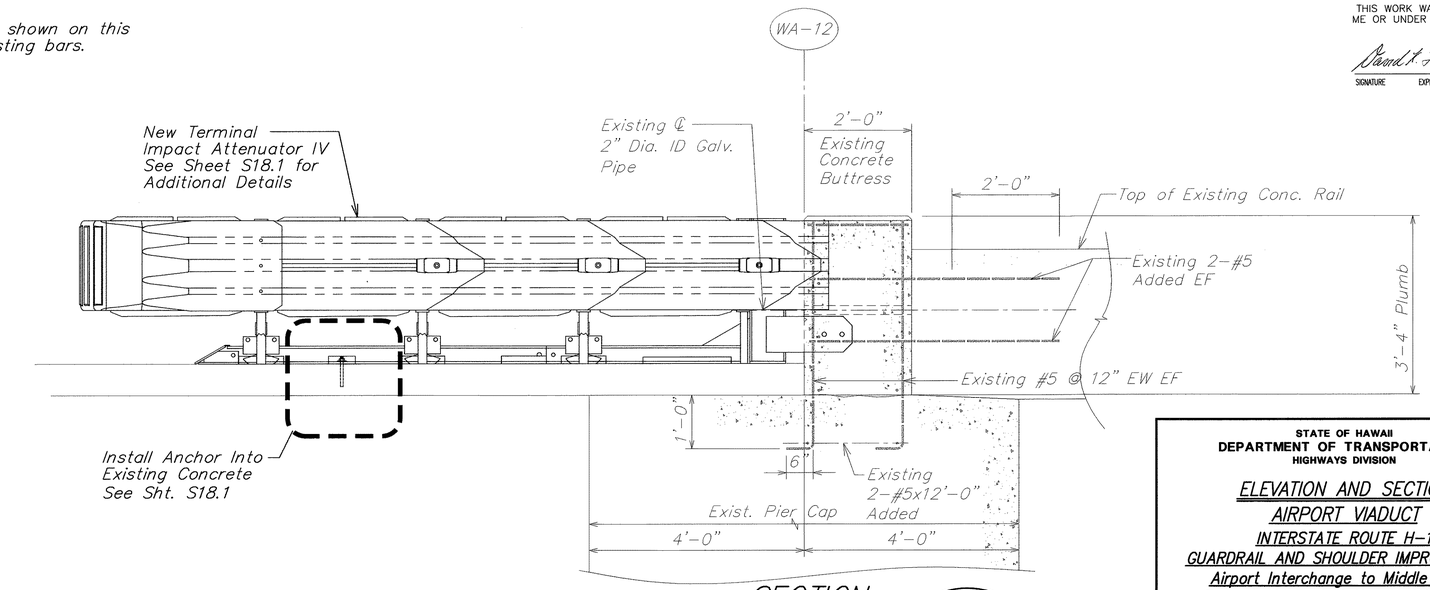

SECTION D
SCALE: 3/4"=1'-0" S4.8 S4.9

STATE OF HAWAII
DEPARTMENT OF TRANSPORTATION
HIGHWAYS DIVISION

ELEVATION AND SECTION
AIRPORT VIADUCT
INTERSTATE ROUTE H-1
GUARDRAIL AND SHOULDER IMPROVEMENTS
Airport Interchange to Middle Street
Federal Aid Project No. IM-H1-1(240)

SCALE: As Noted DATE: OCTOBER 2003

SHEET No. S4.9 OF 111 SHEETS

ORIGINAL PLAN	SURVEY PLOTTED BY	DATE
	DRAWN BY	
NOTE BOOK	PLOTTED BY	
	DESIGNED BY	
	QUANTITIES BY	
No.	CHECKED BY	

FILE: PCGS49.DWG
PLOT: 1 = 1

C:\KSF\GUARDRAIL\10-24-03\PCGS0409.dwg, 10/23/2003 3:12:04 PM, KSFinc.pc3, 1:1

FED. ROAD DIST. NO.	STATE	FED. AID PROJ. NO.	FISCAL YEAR	SHEET NO.	TOTAL SHEETS
HAWAII	HAW.	IM-H1-1(240)	2004	37	143

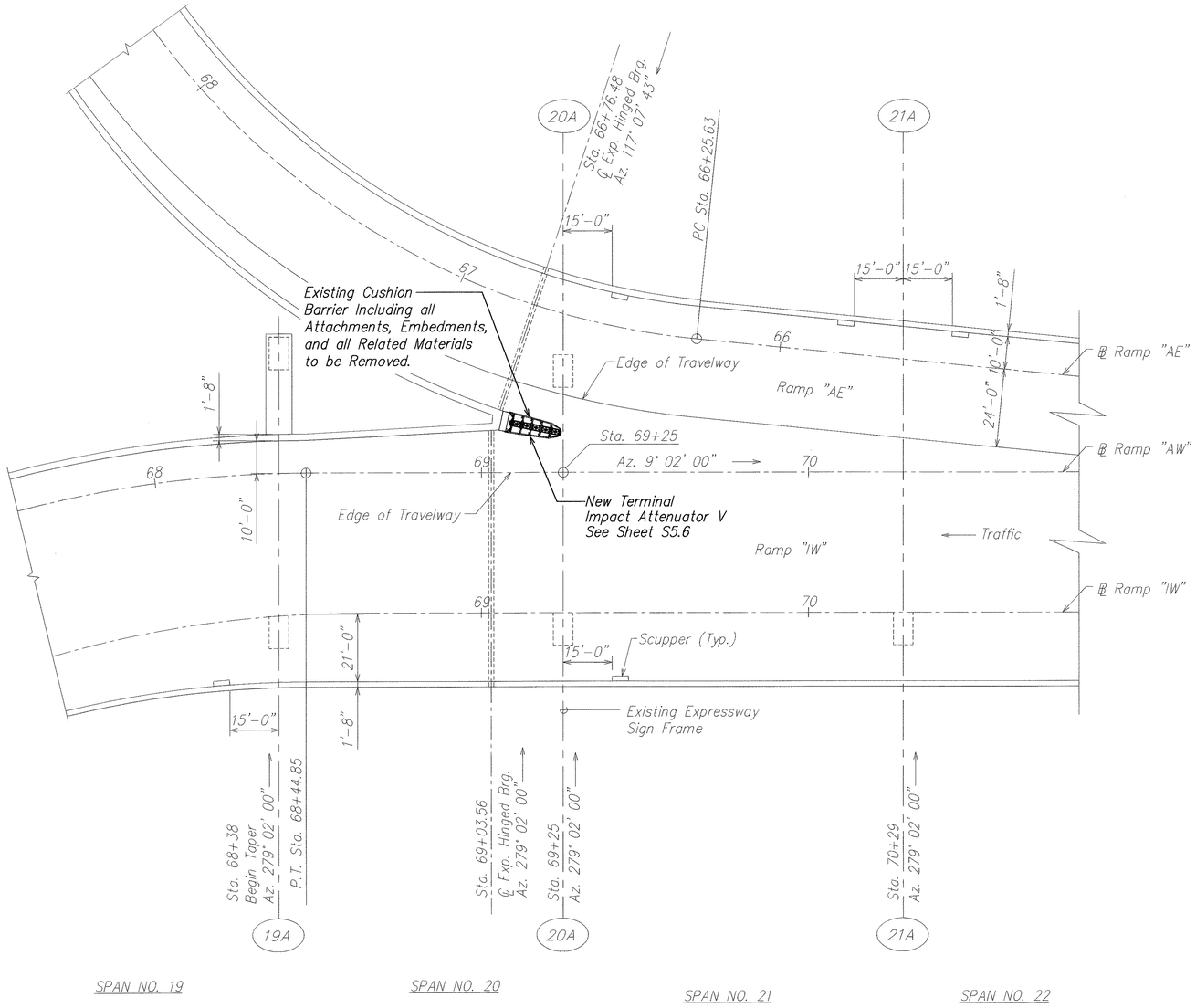

N

EXISTING PARTIAL DECK PLAN
RAMPS "IW", "AW" & "AE"

SCALE: 1" = 20'-0"

ORIGINAL PLAN	SURVEY PLOTTED BY	DATE
	DRAWN BY	
	TRACED BY	
NOTE BOOK	DESIGNED BY	
	QUANTITIES BY	
No.	CHECKED BY	

DAVID K. FUJIWARA
LICENSED PROFESSIONAL ENGINEER
NO. 8104-S
HAWAII, U.S.A.

THIS WORK WAS PREPARED BY ME OR UNDER MY SUPERVISION.

SIGNATURE — EXPIRATION DATE OF THE LICENSE 4-30-04

STATE OF HAWAII
DEPARTMENT OF TRANSPORTATION
HIGHWAYS DIVISION

PARTIAL DECK PLAN
AIRPORT INTERCHANGE
INTERSTATE ROUTE H-1
GUARDRAIL AND SHOULDER IMPROVEMENTS
Airport Interchange to Middle Street
Federal Aid Project No. IM-H1-1(240)

SCALE: As Noted — DATE: OCTOBER 2003

SHEET No. S5.1 OF 111 SHEETS

FILE: PCDS51.DWG
PLOT: 1 = 1

C:\KSF\GUARDRAIL\10-24-03\PCGS0501.dwg, 10/23/2003 3:44:50 PM, KSFinc.pc3, 1:1

FED. ROAD DIST. NO.	STATE	FED. AID PROJ. NO.	FISCAL YEAR	SHEET NO.	TOTAL SHEETS
HAWAII	HAW.	IM-H1-1(240)	2004	38	143

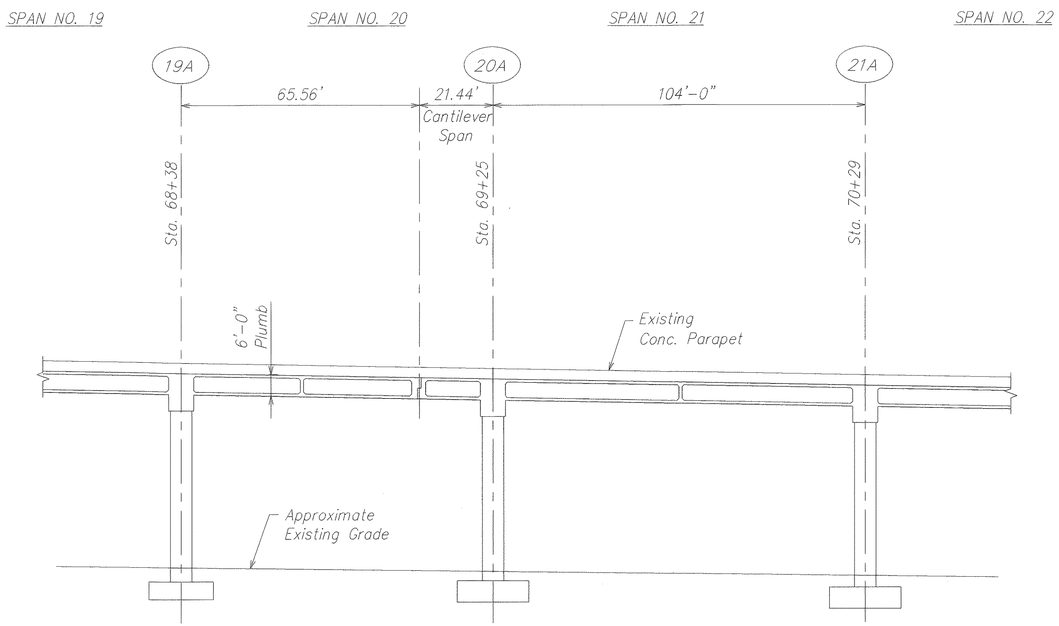

PARTIAL LONGITUDINAL SECTION ALONG ℄ RAMP "IW" RAMPS "AW" & "AE"

SCALE: 1" = 20'-0"

ORIGINAL PLAN	SURVEY PLOTTED BY	DATE
	DRAWN BY	
NOTE BOOK	TRACED BY	
	DESIGNED BY	
	QUANTITIES BY	
No.	CHECKED BY	

THIS WORK WAS PREPARED BY ME OR UNDER MY SUPERVISION.

SIGNATURE — EXPIRATION DATE OF THE LICENSE: 4-30-04

DAVID K. FUJIWARA — LICENSED PROFESSIONAL ENGINEER — NO. 8104-S — HAWAII, U.S.A.

STATE OF HAWAII
DEPARTMENT OF TRANSPORTATION
HIGHWAYS DIVISION

PARTIAL LONGITUDINAL SECTION
AIRPORT INTERCHANGE
INTERSTATE ROUTE H-1
GUARDRAIL AND SHOULDER IMPROVEMENTS
Airport Interchange to Middle Street
Federal Aid Project No. IM-H1-1(240)

SCALE: As Noted — DATE: OCTOBER 2003

SHEET No. S5.2 OF 111 SHEETS

FILE: PCGS52.DWG
PLOT: 1 = 1

C:\KSF\GUARDRAIL\10-24-03\PCGS0501.dwg, 10/23/2003 3:45:24 PM, KSFinc.pc3, 1:1

FED. ROAD DIST. NO.	STATE	FED. AID PROJ. NO.	FISCAL YEAR	SHEET NO.	TOTAL SHEETS
HAWAII	HAW.	IM-H1-1(240)	2004	39	143

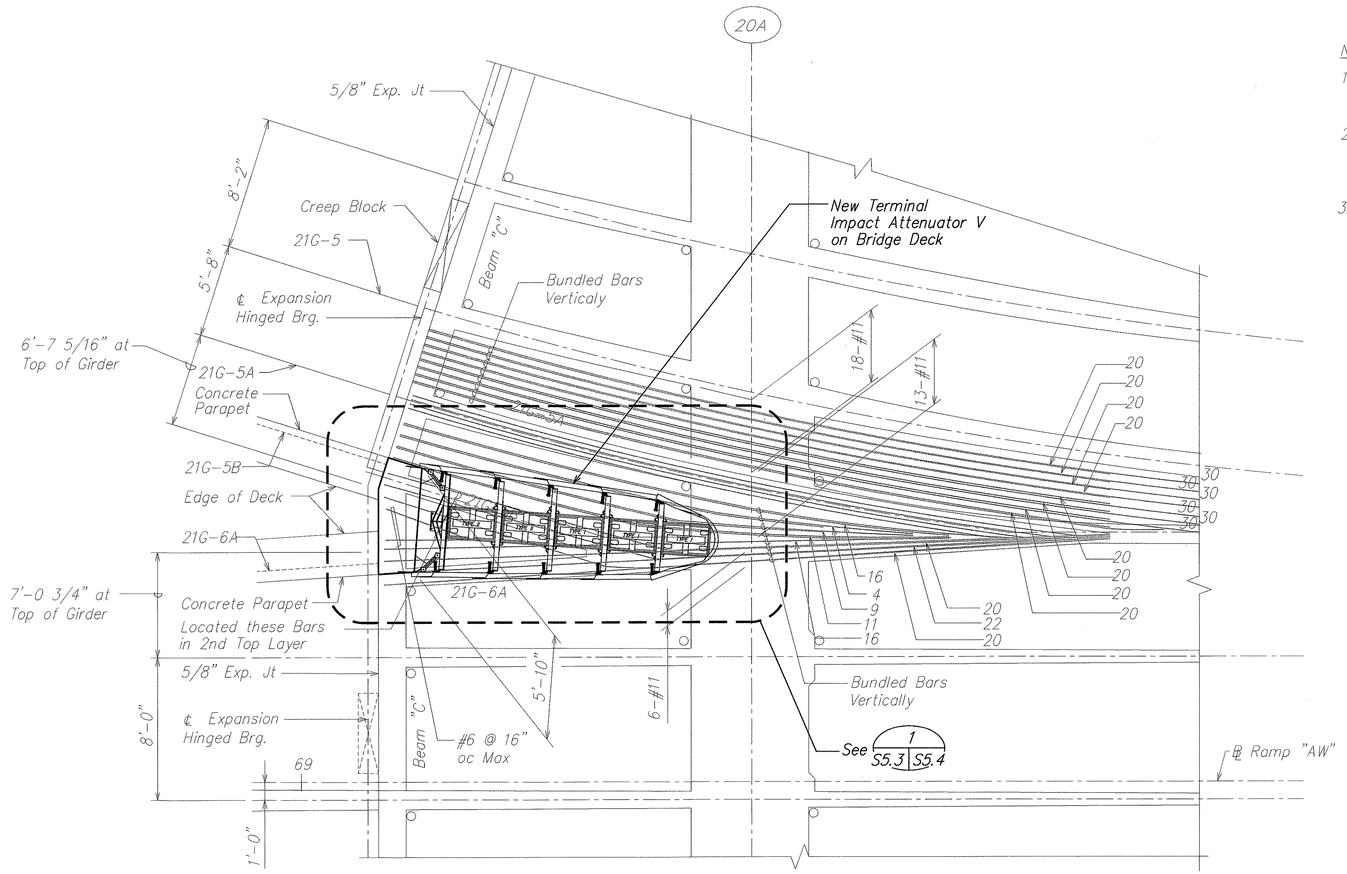

NOTES:

1. Unless otherwise noted on plans, all reinforcing are #11 bars.
2. Numbers at ends of bars indicate distance in feet from adjacent ℄ pier for all top reinforcement.
3. All reinforcing on this sheet are existing bars.

EXISTING PARTIAL DECK FRAMING PLAN
RAMPS "IW" AND "AW"

SCALE: 1/4" = 1'-0"

ORIGINAL PLAN	SURVEY PLOTTED BY	DATE
	DRAWN BY	"
	TRACED BY	"
NOTE BOOK	DESIGNED BY	"
	QUANTITIES BY	"
No.	CHECKED BY	"

DAVID K. FUJIMARA LICENSED PROFESSIONAL ENGINEER NO. 8104-S HAWAII, U.S.A.

THIS WORK WAS PREPARED BY ME OR UNDER MY SUPERVISION.

SIGNATURE — EXPIRATION DATE OF THE LICENSE 4-30-04

STATE OF HAWAII
DEPARTMENT OF TRANSPORTATION
HIGHWAYS DIVISION

DECK FRAMING PLAN
AIRPORT INTERCHANGE
INTERSTATE ROUTE H-1
GUARDRAIL AND SHOULDER IMPROVEMENTS
Airport Interchange to Middle Street
Federal Aid Project No. IM-H1-1(240)

SCALE: As Noted — DATE: OCTOBER 2003

SHEET No. S5.3 OF 111 SHEETS

FILE: PCGS53.DWG
PLOT: 1 = 1

C:\KSF\GUARDRAIL\10-24-03\PCGS0503.dwg, 10/23/2003 3:46:40 PM, KSFinc.pc3, 1:1

FED. ROAD DIST. NO.	STATE	FED. AID PROJ. NO.	FISCAL YEAR	SHEET NO.	TOTAL SHEETS
HAWAII	HAW.	IM-H1-1(240)	2004	40	143

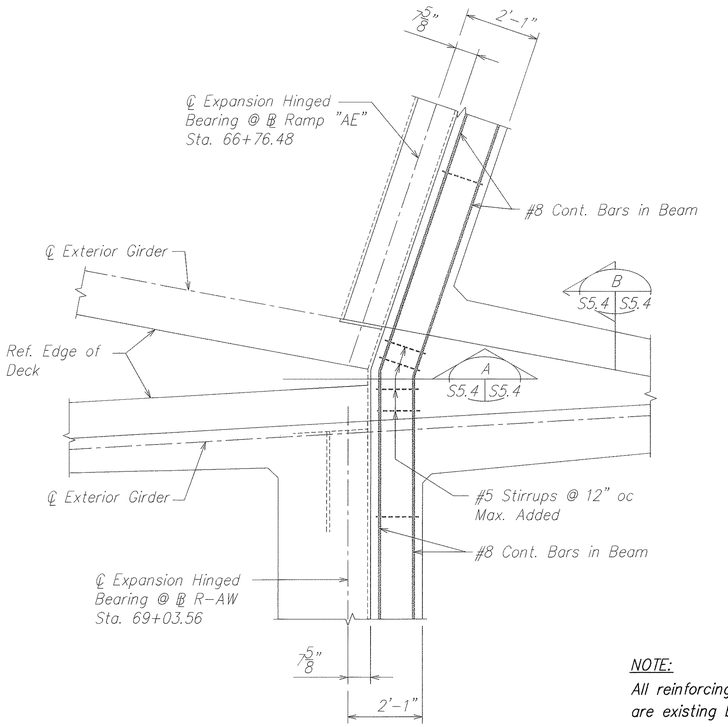

NOTE:
All reinforcing shown on this sheet are existing bars.

EXISTING BEAM DETAIL (1 / S5.3 S5.4)

SCALE: 1/2" = 1'-0"

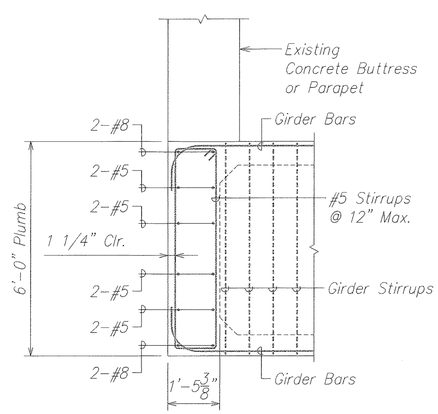

EXISTING BEAM REINFORCING SECTION (A / S5.4 S5.4)

SCALE: 1/2" = 1'-0"

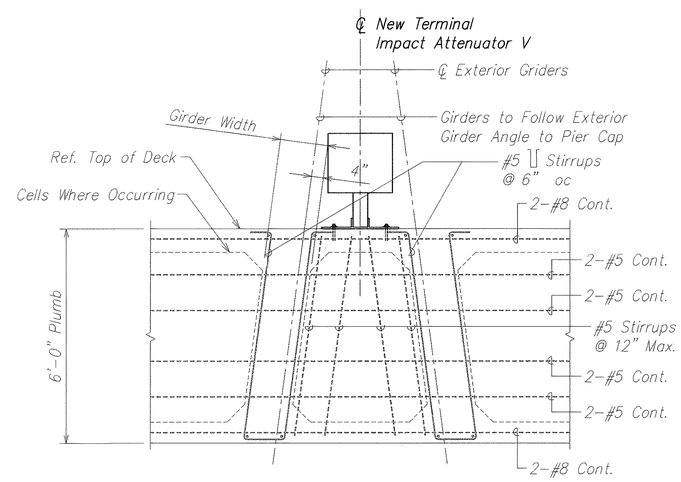

EXISTING BEAM REINFORCING SECTION (B / S5.4 S5.4)

SCALE: 1/2" = 1'-0"

ORIGINAL PLAN	SURVEY PLOTTED BY	DATE
	DRAWN BY	
NOTE BOOK	TRACED BY	
	DESIGNED BY	
	QUANTITIES BY	
No.	CHECKED BY	

DAVID K. FUJIWARA LICENSED PROFESSIONAL ENGINEER NO. 8104-S HAWAII, U.S.A.

THIS WORK WAS PREPARED BY ME OR UNDER MY SUPERVISION.

SIGNATURE — EXPIRATION DATE OF THE LICENSE 4-30-04

STATE OF HAWAII
DEPARTMENT OF TRANSPORTATION
HIGHWAYS DIVISION

SECTIONS AND DETAILS
AIRPORT INTERCHANGE
INTERSTATE ROUTE H-1
GUARDRAIL AND SHOULDER IMPROVEMENTS
Airport Interchange to Middle Street
Federal Aid Project No. IM-H1-1(240)

SCALE: As Noted — DATE: OCTOBER 2003

SHEET No. S5.4 OF 111 SHEETS

FILE: PC59-3.DWG
PLOT: 1 = 1

C:\KSF\GUARDRAIL\10-24-03\PCG50504.dwg, 10/23/2003 3:51:11 PM, KSFinc.pc3, 1:1

FED. ROAD DIST. NO.	STATE	FED. AID PROJ. NO.	FISCAL YEAR	SHEET NO.	TOTAL SHEETS
HAWAII	HAW.	IM-H1-1(240)	2004	41	143

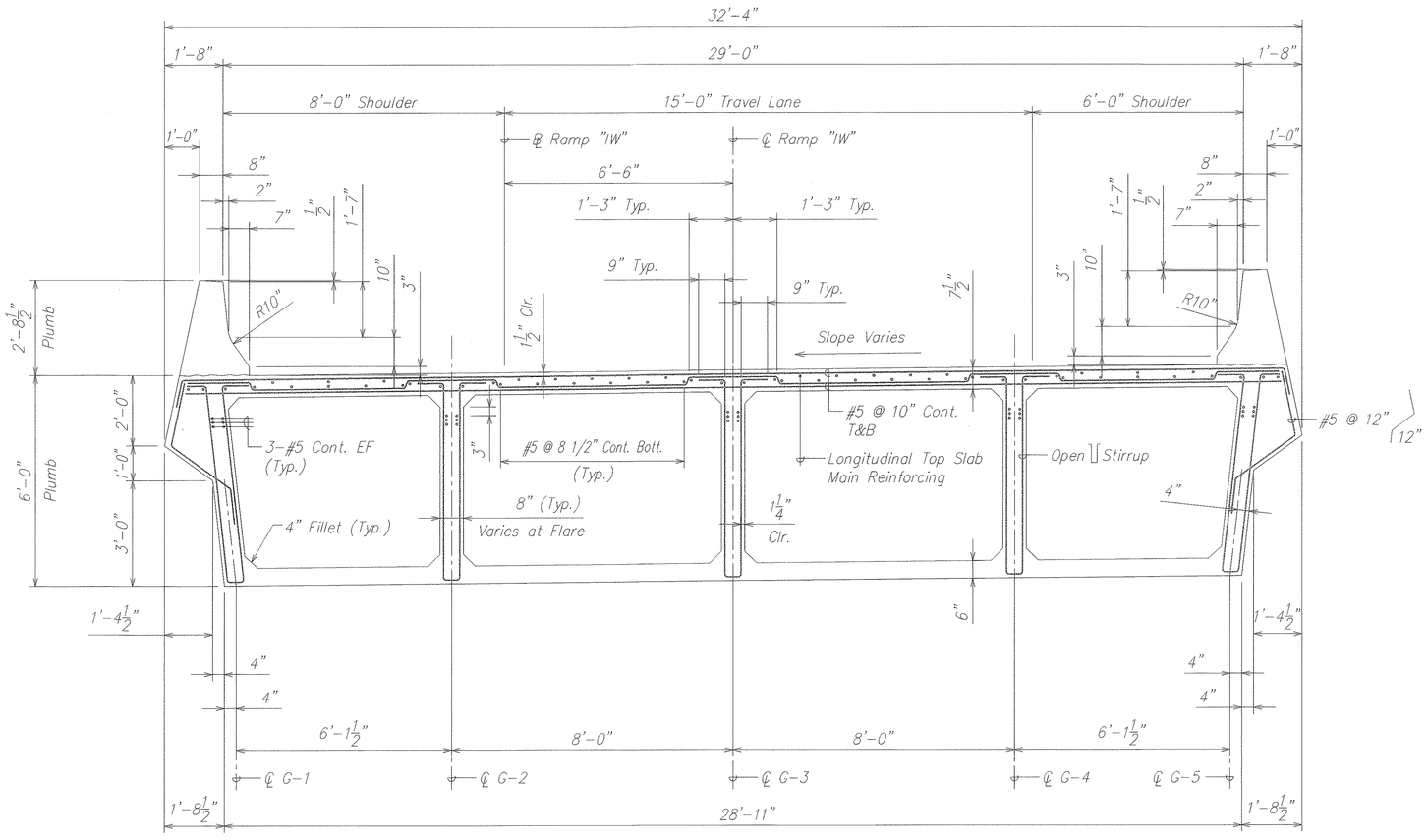

EXISTING NORMAL DECK SECTION AT SPAN #20, #21 #22, #23, #24, #25, #26, #27, #33A, & #34A

SCALE: 1/2" = 1'-0"

A S5.5 S5.5

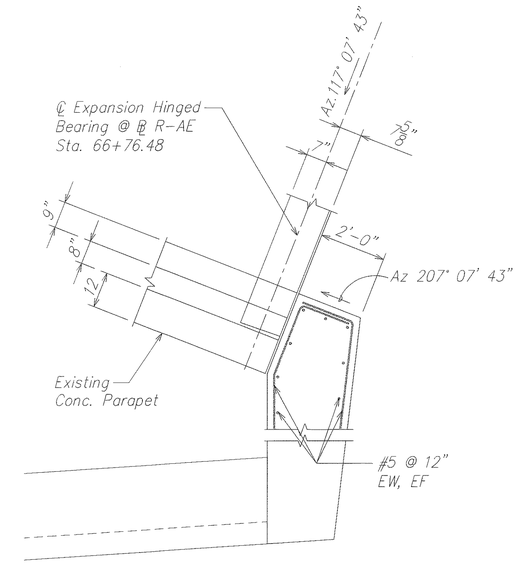

EXISTING CONCRETE BUTTRESS DETAIL

SCALE: 1/2" = 1'-0"

1 S5.6 S5.5

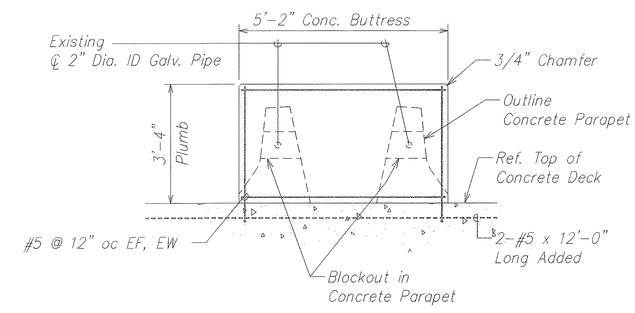

EXISTING CONCRETE BUTTRESS SECTION

SCALE: 1/2" = 1'-0"

2 S5.6 S5.5

NOTE:
All reinforcing on this sheet are existing bars.

DAVID K. FUJIWARA LICENSED PROFESSIONAL ENGINEER NO. 8104-S HAWAII, U.S.A.

THIS WORK WAS PREPARED BY ME OR UNDER MY SUPERVISION.

SIGNATURE — EXPIRATION DATE OF THE LICENSE 4-30-04

STATE OF HAWAII
DEPARTMENT OF TRANSPORTATION
HIGHWAYS DIVISION

SECTION
AIRPORT INTERCHANGE
INTERSTATE ROUTE H-1
GUARDRAIL AND SHOULDER IMPROVEMENTS
Airport Interchange to Middle Street
Federal Aid Project No. IM-H1-1(240)

SCALE: As Noted — DATE: OCTOBER 2003

SHEET No. S5.5 OF 111 SHEETS

ORIGINAL PLAN — NOTE BOOK No. — SURVEY PLOTTED BY — DRAWN BY — TRACED BY — DESIGNED BY — QUANTITIES BY — CHECKED BY — DATE

FILE: PCGS55.DWG
PLOT: 1 = 1

C:\KSF\GUARDRAIL\10-24-03\PCGS0505.dwg, 10/23/2003 3:52:42 PM, KSFrnc.pc3, 1:1

FED. ROAD DIST. NO.	STATE	FED. AID PROJ. NO.	FISCAL YEAR	SHEET NO.	TOTAL SHEETS
HAWAII	HAW.	IM-H1-1(240)	2004	42	143

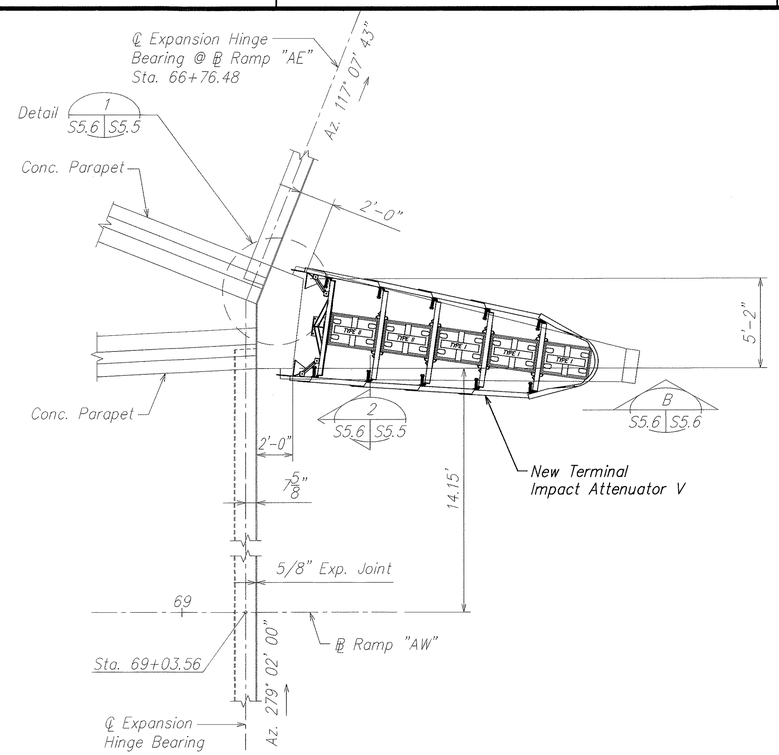

PARTIAL DECK FRAMING PLAN
RAMPS "IW" AND "AW"

SCALE: 1/4" = 1'-0"

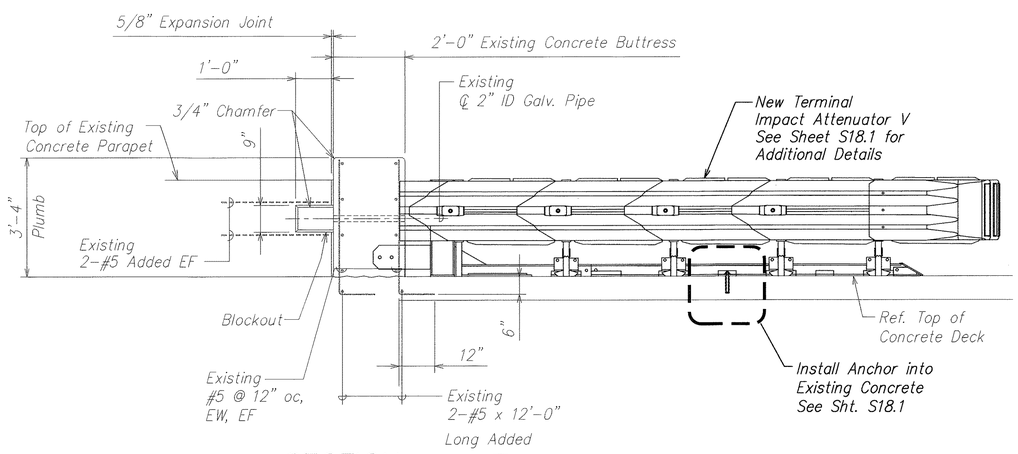

SECTION B S5.6 S5.6

SCALE: 1/2" = 1'-0"

ORIGINAL PLAN	SURVEY PLOTTED BY	DATE
	DRAWN BY	
NOTE BOOK	TRACED BY	
	DESIGNED BY	
No.	QUANTITIES BY	
	CHECKED BY	

DAVID K. FUJIWARA LICENSED PROFESSIONAL ENGINEER NO. 8104-S HAWAII, U.S.A.

THIS WORK WAS PREPARED BY ME OR UNDER MY SUPERVISION.

SIGNATURE — EXPIRATION DATE OF THE LICENSE 4-30-04

STATE OF HAWAII
DEPARTMENT OF TRANSPORTATION
HIGHWAYS DIVISION

PLAN, SECTIONS, AND DETAIL
AIRPORT INTERCHANGE
INTERSTATE ROUTE H-1
GUARDRAIL AND SHOULDER IMPROVEMENTS
Airport Interchange to Middle Street
Federal Aid Project No. IM-H1-1(240)

SCALE: As Noted — DATE: OCTOBER 2003

SHEET No. S5.6 OF 111 SHEETS

FILE: PCGS56.DWG
PLOT: 1 = 1

C:\KSF\GUARDRAIL\10-24-03\PCGS0506.dwg, 10/23/2003 3:54:07 PM, KSFinc.pc3, 1:1

FED. ROAD DIST. NO.	STATE	FED. AID PROJ. NO.	FISCAL YEAR	SHEET NO.	TOTAL SHEETS
HAWAII	HAW.	IM-H1-1(240)	2004	43	143

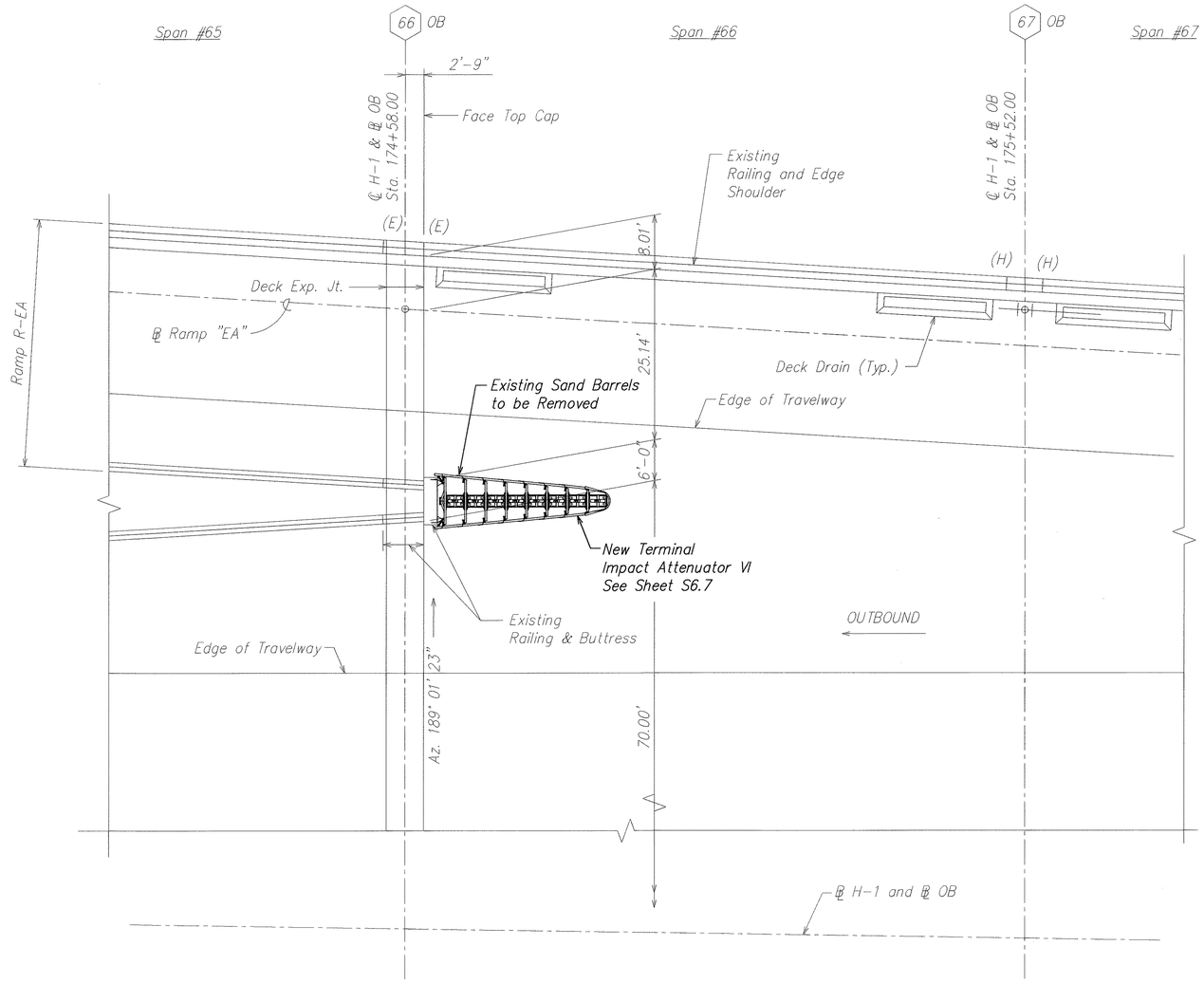

N

PARTIAL DECK LAYOUT PLAN ℄ H-1 OUTBOUND

Scale: 1" = 10'-0"

ORIGINAL PLAN	SURVEY PLOTTED BY	DATE
	DRAWN BY	
NOTE BOOK	TRACED BY	
	DESIGNED BY	
	QUANTITIES BY	
No.	CHECKED BY	

DAVID K. FUJIWARA LICENSED PROFESSIONAL ENGINEER NO. 8104-S HAWAII, U.S.A.

THIS WORK WAS PREPARED BY ME OR UNDER MY SUPERVISION.

SIGNATURE — EXPIRATION DATE OF THE LICENSE 4-30-04

STATE OF HAWAII
DEPARTMENT OF TRANSPORTATION
HIGHWAYS DIVISION

PARTIAL DECK LAYOUT PLAN
AIRPORT VIADUCT
INTERSTATE ROUTE H-1
GUARDRAIL AND SHOULDER IMPROVEMENTS
Airport Interchange to Middle Street
Federal Aid Project No. IM-H1-1(240)

SCALE: As Noted — DATE: OCTOBER 2003

SHEET No. S6.1 OF 111 SHEETS

FILE: PCGS61.DWG
PLOT: 1 = 1

C:\KSF\GUARDRAIL\10-24-03\PCGS0601.dwg, 10/23/2003 3:13:55 PM, KSFrinc.pc3, 1:1

FED. ROAD DIST. NO.	STATE	FED. AID PROJ. NO.	FISCAL YEAR	SHEET NO.	TOTAL SHEETS
HAWAII	HAW.	IM-H1-1(240)	2004	44	143

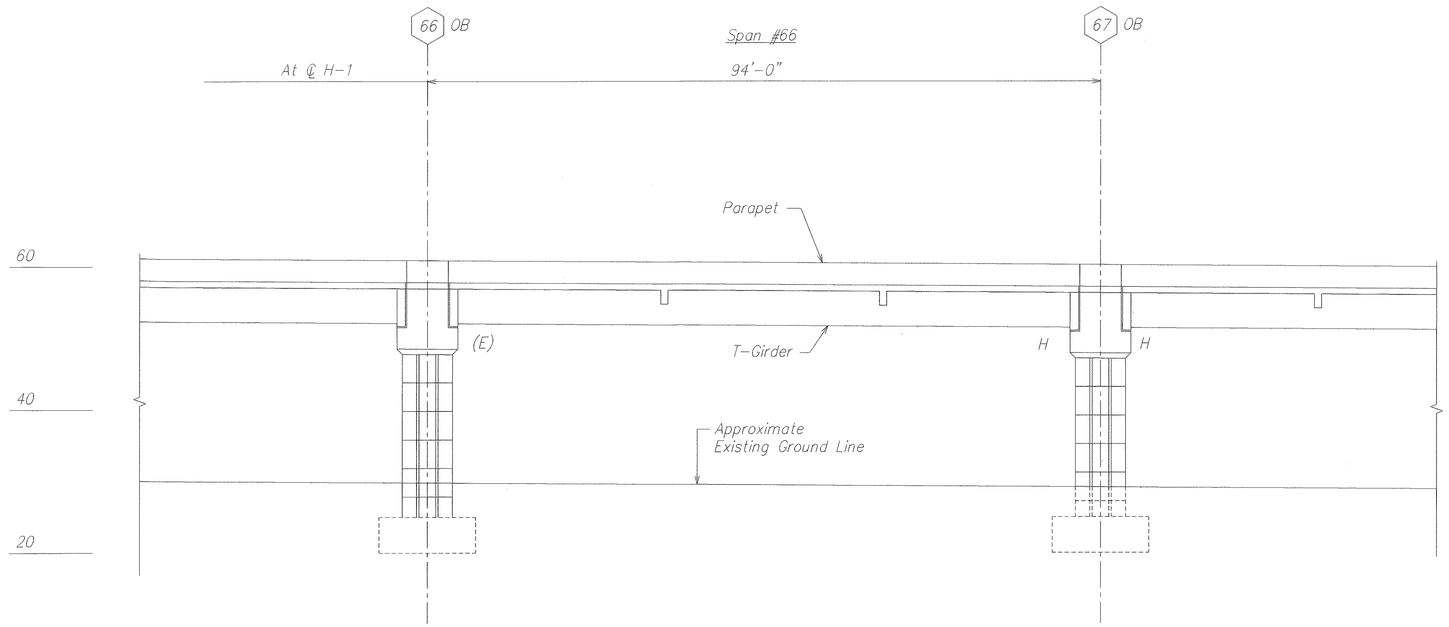

LONGITUDINAL DECK SECTIONS ALONG ℄ H-1 OUTBOUND

Scale: 1" = 10'-0"

ORIGINAL PLAN	SURVEY PLOTTED BY	DATE
	DRAWN BY	
NOTE BOOK	TRACED BY	
	DESIGNED BY	
	QUANTITIES BY	
No.	CHECKED BY	

DAVID K. FUJIWARA
LICENSED PROFESSIONAL ENGINEER
NO. 8104-S
HAWAII, U.S.A.

THIS WORK WAS PREPARED BY ME OR UNDER MY SUPERVISION.

SIGNATURE — EXPIRATION DATE OF THE LICENSE 4-30-04

STATE OF HAWAII
DEPARTMENT OF TRANSPORTATION
HIGHWAYS DIVISION

LONGITUDINAL SECTION
AIRPORT VIADUCT
INTERSTATE ROUTE H-1
GUARDRAIL AND SHOULDER IMPROVEMENTS
Airport Interchange to Middle Street
Federal Aid Project No. IM-H1-1(240)

SCALE: As Noted — DATE: OCTOBER 2003

SHEET No. S6.2 OF 111 SHEETS

FILE: PCGS62.DWG
PLOT: 1 = 1

C:\KSF\GUARDRAIL\10-24-03\PCGS0601.dwg, 10/23/2003 3:14:20 PM, KSFinc.pc3, 1:1

FED. ROAD DIST. NO.	STATE	FED. AID PROJ. NO.	FISCAL YEAR	SHEET NO.	TOTAL SHEETS
HAWAII	HAW.	IM-H1-1(240)	2004	45	143

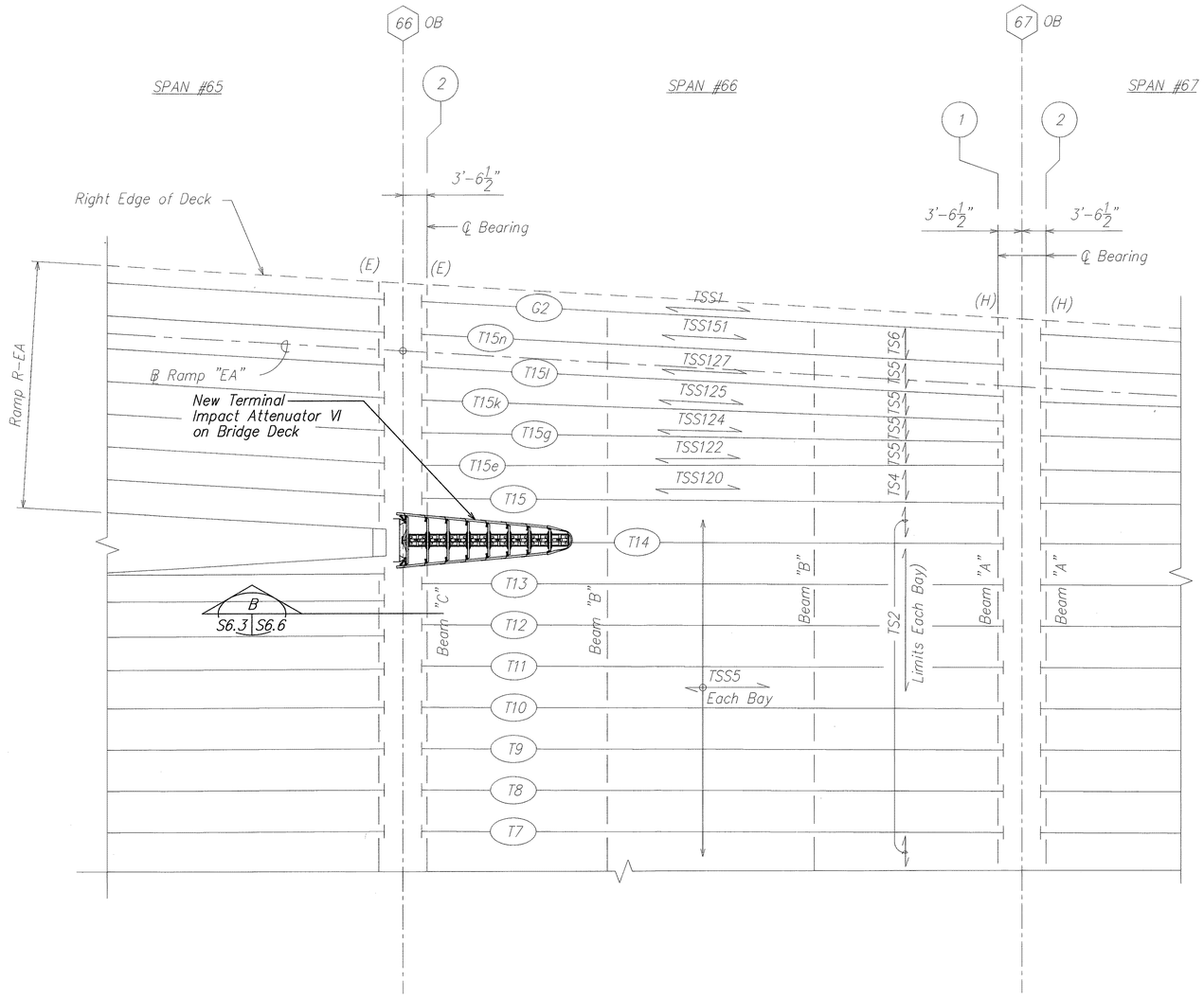

EXISTING PARTIAL DECK FRAMING PLAN ⅊ H-1 OUTBOUND

Scale: 1" = 10'-0"

ORIGINAL PLAN	SURVEY PLOTTED BY	DATE
	DRAWN BY	
	TRACED BY	
NOTE BOOK	DESIGNED BY	
	QUANTITIES BY	
No.	CHECKED BY	

THIS WORK WAS PREPARED BY ME OR UNDER MY SUPERVISION.

DAVID K. FUJIWARA LICENSED PROFESSIONAL ENGINEER NO. 8104-S HAWAII, U.S.A.

SIGNATURE — EXPIRATION DATE OF THE LICENSE 4-30-04

STATE OF HAWAII
DEPARTMENT OF TRANSPORTATION
HIGHWAYS DIVISION

PARTIAL DECK FRAMING PLAN
AIRPORT VIADUCT
INTERSTATE ROUTE H-1
GUARDRAIL AND SHOULDER IMPROVEMENTS
Airport Interchange to Middle Street
Federal Aid Project No. IM-H1-1(240)

SCALE: As Noted — DATE: OCTOBER 2003

SHEET No. S6.3 OF 111 SHEETS

FILE: PCGS63.DWG
PLOT: 1 = 1

C:\KSF\GUARDRAIL\10-24-03\PCGS0601.dwg, 10/23/2003 3:14:57 PM, KSfrc.pc3, 1:1

FED. ROAD DIST. NO.	STATE	FED. AID PROJ. NO.	FISCAL YEAR	SHEET NO.	TOTAL SHEETS
HAWAII	HAW.	IM-H1-1(240)	2004	46	143

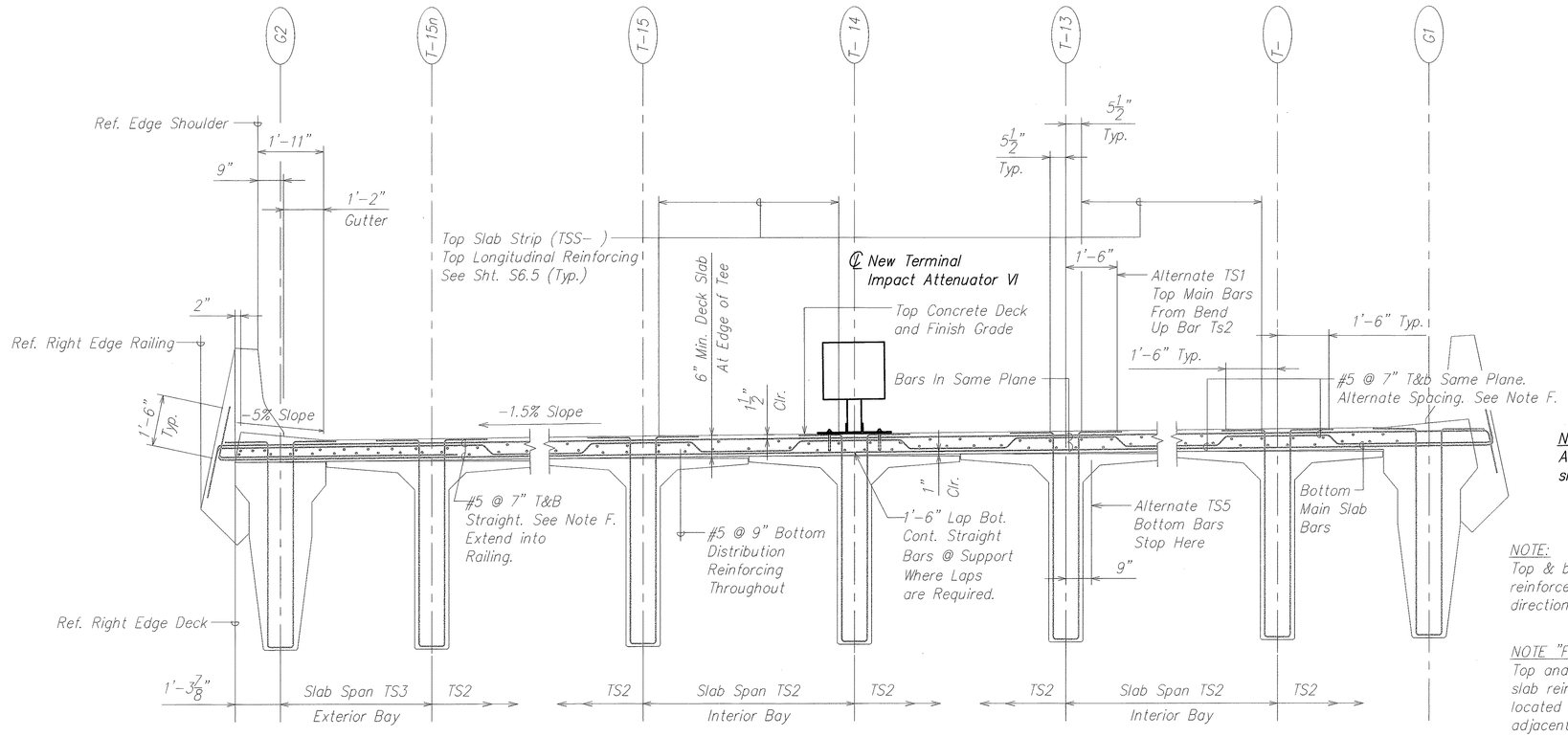

NOTE:
All reinforcing shown on this sheet are existing bars.

NOTE:
Top & bottom transverse main deck reinforcemnt TS4, TS5, TS6 Continued in same direction as adjacent TS2 throughout

NOTE "F":
Top and bottom main transverse deck slab reinforcement TS1, TS2, TS3 located normal to and measured along adjacent Tee or Girder.

TYPICAL EXISTING TRANSVERSE DECK SLAB SECTION TS1, TS2, TS3 (A / S6.4 | S6.4)

SCALE: 1/2" = 1'-0"

ORIGINAL PLAN	SURVEY PLOTTED BY	DATE
	DRAWN BY	
NOTE BOOK	TRACED BY	
	DESIGNED BY	
	QUANTITIES BY	
No.	CHECKED BY	

DAVID K. FUJIWARA
LICENSED PROFESSIONAL ENGINEER
NO. 8104-S
HAWAII, U.S.A.

THIS WORK WAS PREPARED BY ME OR UNDER MY SUPERVISION.

SIGNATURE — EXPIRATION DATE OF THE LICENSE 4-30-04

STATE OF HAWAII
DEPARTMENT OF TRANSPORTATION
HIGHWAYS DIVISION

SECTION
AIRPORT VIADUCT
INTERSTATE ROUTE H-1
GUARDRAIL AND SHOULDER IMPROVEMENTS
Airport Interchange to Middle Street
Federal Aid Project No. IM-H1-1(240)

SCALE: As Noted — DATE: OCTOBER 2003

SHEET No. S6.4 OF 111 SHEETS

FILE: PCGS64.DWG
PLOT: 1 = 1

C:\KSF\GUARDRAIL\10-24-03\PCGS0604.dwg, 10/23/2003 3:16:11 PM, KSFinc.pc3, 1:1

FED. ROAD DIST. NO.	STATE	FED. AID PROJ. NO.	FISCAL YEAR	SHEET NO.	TOTAL SHEETS
HAWAII	HAW.	IM-H1-1(240)	2004	47	143

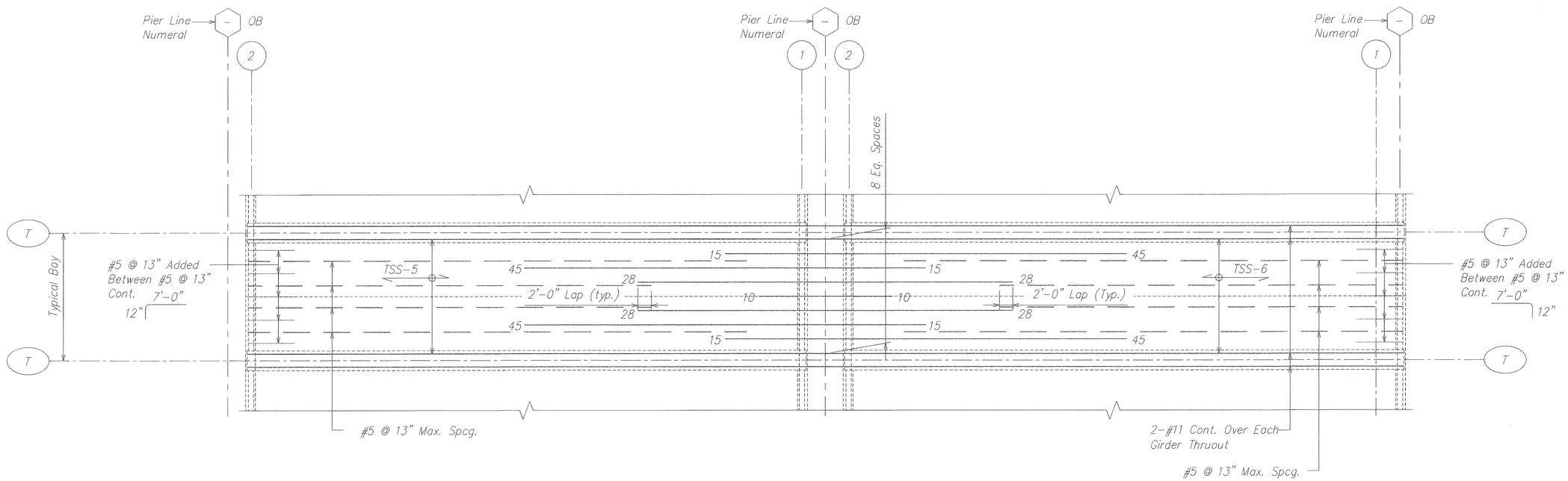

TYPICAL ARRANGEMENT OF EXISTING REINFORCEMENT – TOP SLAB STRIPS TSS-5, TSS-6

SCALE: 1/8" = 1'-0"

A
A6.5 | S6.5

NOTES:

All reinforcement #11 except as otherwise noted.

Number at ends of bars denotes dimension in feet from the adjacent pier line numeral.

For additional slab reinforcement, see Normal Section and corresponding details.

All #5 @ 13" max. bars extended & lapped 2'-0" min. with the adjacent #11 bars as shown.

Cont. added are continuous bars from one or more spans extended partially into the adjacent span at ends.

~~00~~ indicates bundle bars in groups of two.

ORIGINAL PLAN | NOTE BOOK No. | SURVEY PLOTTED BY | DRAWN BY | TRACED BY | DESIGNED BY | QUANTITIES BY | CHECKED BY | DATE

DAVID K. FUJIWARA
LICENSED PROFESSIONAL ENGINEER
NO. 8104-S
HAWAII, U.S.A.

THIS WORK WAS PREPARED BY ME OR UNDER MY SUPERVISION.

SIGNATURE — EXPIRATION DATE OF THE LICENSE 4-30-04

STATE OF HAWAII
DEPARTMENT OF TRANSPORTATION
HIGHWAYS DIVISION

TYPICAL TOP SLAB REINF.
AIRPORT VIADUCT
INTERSTATE ROUTE H-1
GUARDRAIL AND SHOULDER IMPROVEMENTS
Airport Interchange to Middle Street
Federal Aid Project No. IM-H1-1(240)

SCALE: As Noted — DATE: OCTOBER 2003

SHEET No. S6.5 OF 111 SHEETS

FILE: PCGS65.DWG
PLOT: 1 = 1

C:\KSF\GUARDRAIL\10-24-03\PCGS0605.dwg, 10/23/2003 3:19:15 PM, KSFinc.pc3, 1:1

FED. ROAD DIST. NO.	STATE	FED. AID PROJ. NO.	FISCAL YEAR	SHEET NO.	TOTAL SHEETS
HAWAII	HAW.	IM-H1-1(240)	2004	48	143

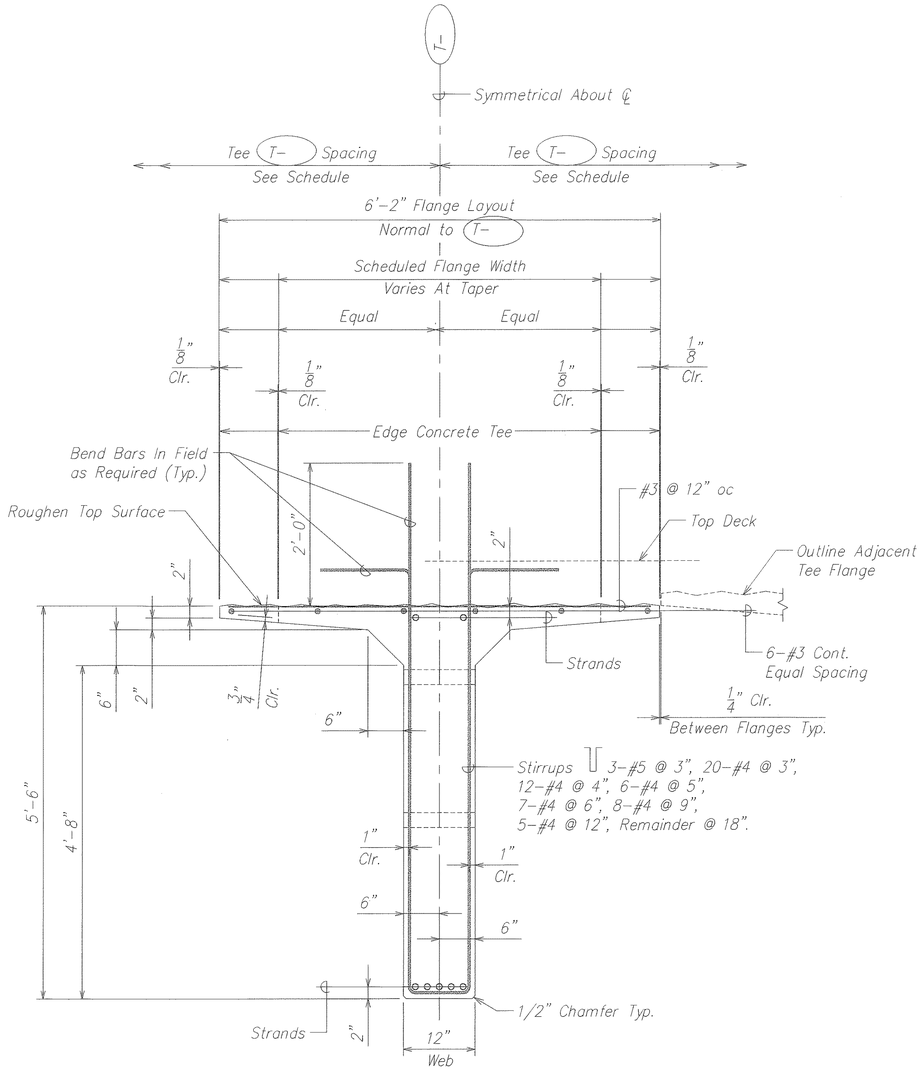

TYPICAL NORMAL SECTION THRU EXISTING PRESTRESSED TEE

SCALE: 1" = 1'-0"

A S6.6 | S6.6

NOTE:
All reinforcing shown on this sheet are existing bars.

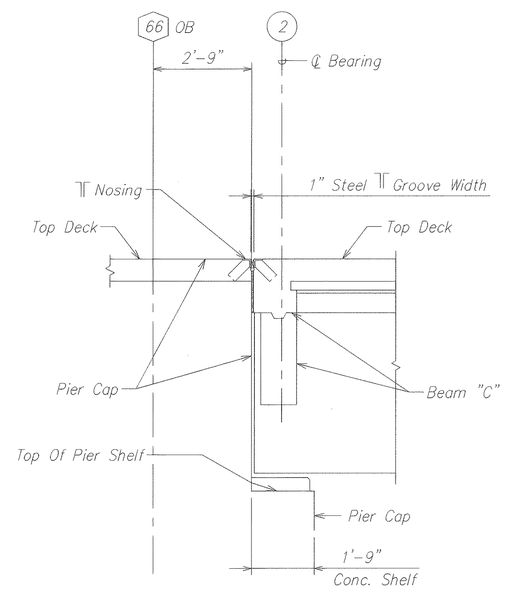

TYPICAL EXISTING SECTION

SCALE: 1/2" = 1'-0"

B S6.3 | S6.6

DAVID K. FUJIWARA LICENSED PROFESSIONAL ENGINEER NO. 8104-S HAWAII, U.S.A.

THIS WORK WAS PREPARED BY ME OR UNDER MY SUPERVISION.

SIGNATURE — EXPIRATION DATE OF THE LICENSE 4-30-04

STATE OF HAWAII
DEPARTMENT OF TRANSPORTATION
HIGHWAYS DIVISION

SECTIONS
AIRPORT VIADUCT
INTERSTATE ROUTE H-1
GUARDRAIL AND SHOULDER IMPROVEMENTS
Airport Interchange to Middle Street
Federal Aid Project No. IM-H1-1(240)

SCALE: As Noted — DATE: OCTOBER 2003

SHEET No. S6.6 OF 111 SHEETS

ORIGINAL PLAN — NOTE BOOK No. — SURVEY PLOTTED BY — DRAWN BY — TRACED BY — DESIGNED BY — QUANTITIES BY — CHECKED BY — DATE

FILE: PCGS66.DWG
PLOT: 1 = 1

C:\KSF\GUARDRAIL\10-24-03\PCGS0606.dwg, 10/23/2003 3:20:39 PM, KSFinc.pc3, 1:1

FED. ROAD DIST. NO.	STATE	FED. AID PROJ. NO.	FISCAL YEAR	SHEET NO.	TOTAL SHEETS
HAWAII	HAW.	IM-H1-1(240)	2004	49	143

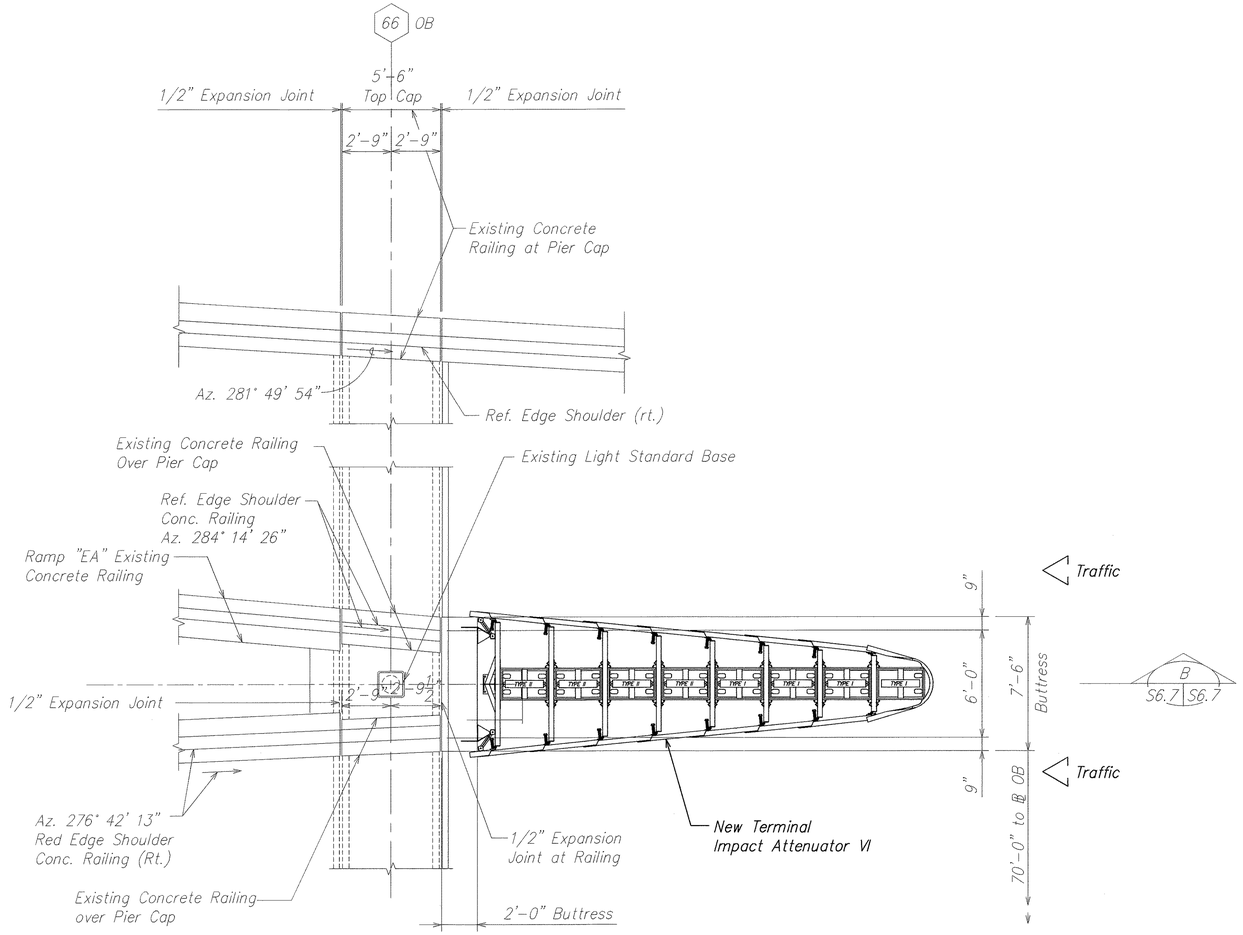

PLAN (A S6.7 S6.7)

SCALE: 1/4" = 1'-0"

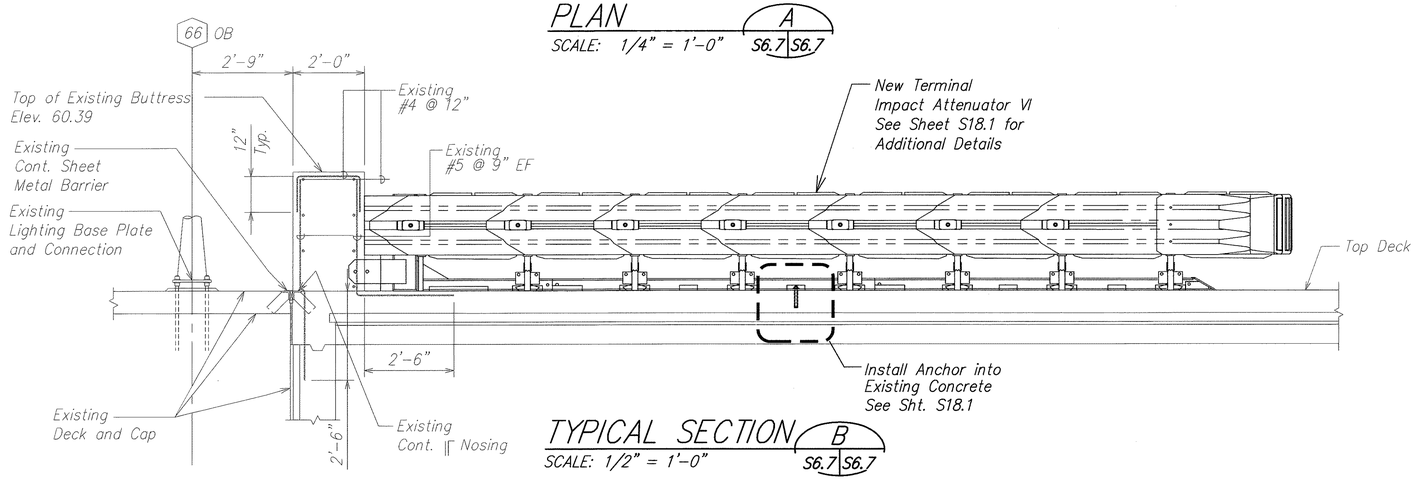

TYPICAL SECTION (B S6.7 S6.7)

SCALE: 1/2" = 1'-0"

ORIGINAL PLAN	SURVEY PLOTTED BY	DATE
	DRAWN BY	
NOTE BOOK	TRACED BY	
	DESIGNED BY	
	QUANTITIES BY	
No.	CHECKED BY	

DAVID K. FUJIWARA
LICENSED PROFESSIONAL ENGINEER
NO. 8104-S
HAWAII, U.S.A.

THIS WORK WAS PREPARED BY ME OR UNDER MY SUPERVISION.

SIGNATURE — EXPIRATION DATE OF THE LICENSE 4-30-04

STATE OF HAWAII
DEPARTMENT OF TRANSPORTATION
HIGHWAYS DIVISION

PLAN AND SECTION
AIRPORT VIADUCT
INTERSTATE ROUTE H-1
GUARDRAIL AND SHOULDER IMPROVEMENTS
Airport Interchange to Middle Street
Federal Aid Project No. IM-H1-1(240)

SCALE: As Noted — DATE: OCTOBER 2003

SHEET No. S6.7 OF 111 SHEETS

FILE: PCGS67.DWG
PLOT: 1 = 1

C:\KSF\GUARDRAIL\10-24-03\PCGS0607.dwg, 10/23/2003 3:22:07 PM, KSFinc.pc3, 1:1

FED. ROAD DIST. NO.	STATE	FED. AID PROJ. NO.	FISCAL YEAR	SHEET NO.	TOTAL SHEETS
HAWAII	HAW.	IM-H1-1(240)	2004	50	143

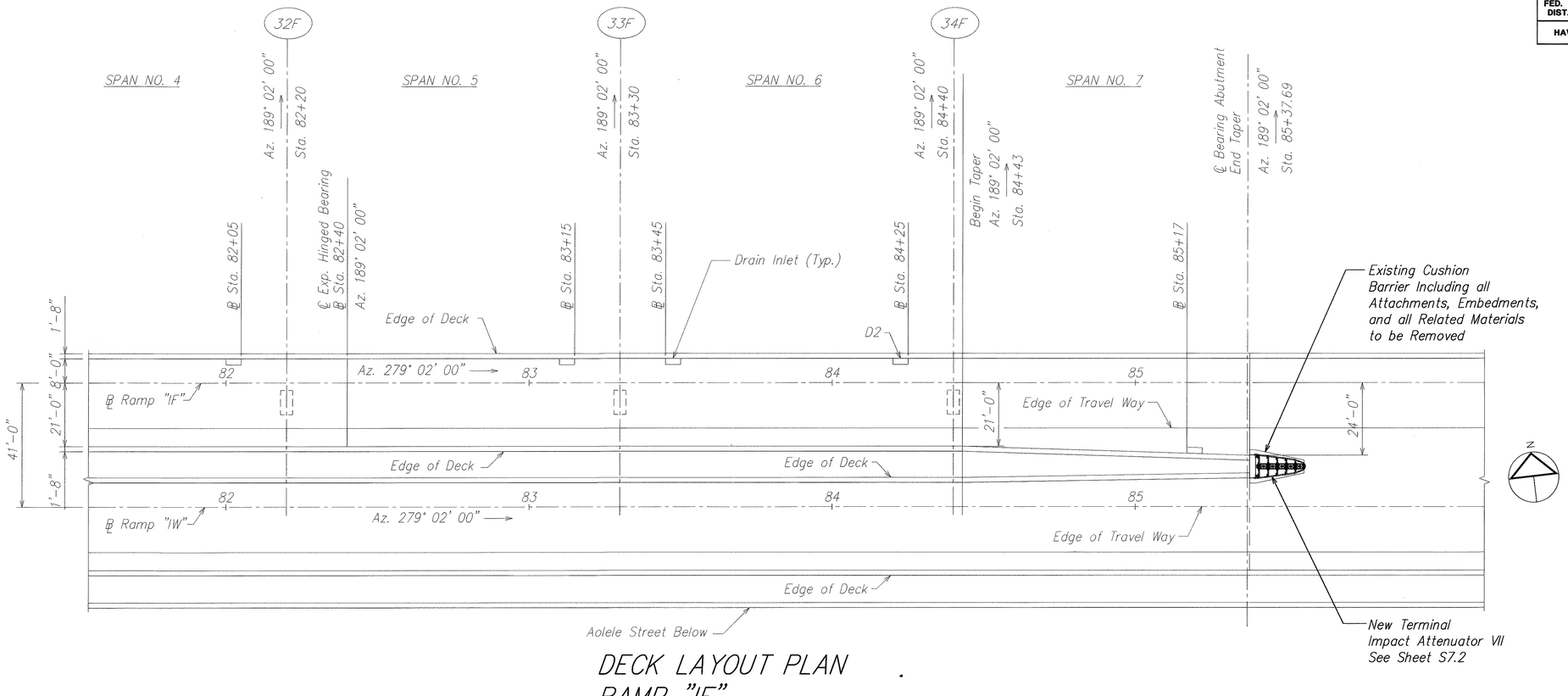

DECK LAYOUT PLAN
RAMP "IF"

SCALE: 1" = 20'-0"

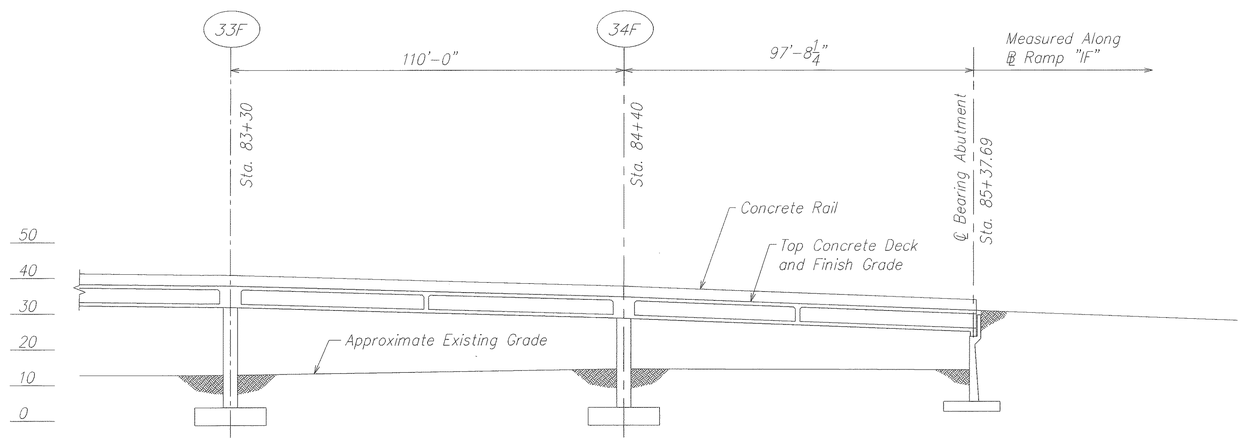

LONGITUDINAL SECTION ALONG ℄ RAMP "IF"

SCALE: 1" = 20'-0"

DAVID K. FUJIWARA
LICENSED PROFESSIONAL ENGINEER
NO. 8104-S
HAWAII, U.S.A.

THIS WORK WAS PREPARED BY ME OR UNDER MY SUPERVISION.

SIGNATURE — EXPIRATION DATE OF THE LICENSE 4-30-04

STATE OF HAWAII
DEPARTMENT OF TRANSPORTATION
HIGHWAYS DIVISION

DECK LAYOUT & SECTION
RAMP IF
INTERSTATE ROUTE H-1
GUARDRAIL AND SHOULDER IMPROVEMENTS
Airport Interchange to Middle Street
Federal Aid Project No. IM-H1-1(240)

SCALE: As Noted — DATE: OCTOBER 2003

SHEET No. S7.1 OF 111 SHEETS

ORIGINAL PLAN	SURVEY PLOTTED BY	DATE
	DRAWN BY	
NOTE BOOK	TRACED BY	
	DESIGNED BY	
	QUANTITIES BY	
No.	CHECKED BY	

FILE: PCCS71.DWG
PLOT: 1 = 1

\\Cad\pst\2000\0066-H1 GUARDRAIL\11-05-03\PCCS0701.dwg, 11/4/2003 3:32:30 PM, KSFrinc.pc3, 1:1

FED. ROAD DIST. NO.	STATE	FED. AID PROJ. NO.	FISCAL YEAR	SHEET NO.	TOTAL SHEETS
HAWAII	HAW.	IM-H1-1(240)	2004	51	143

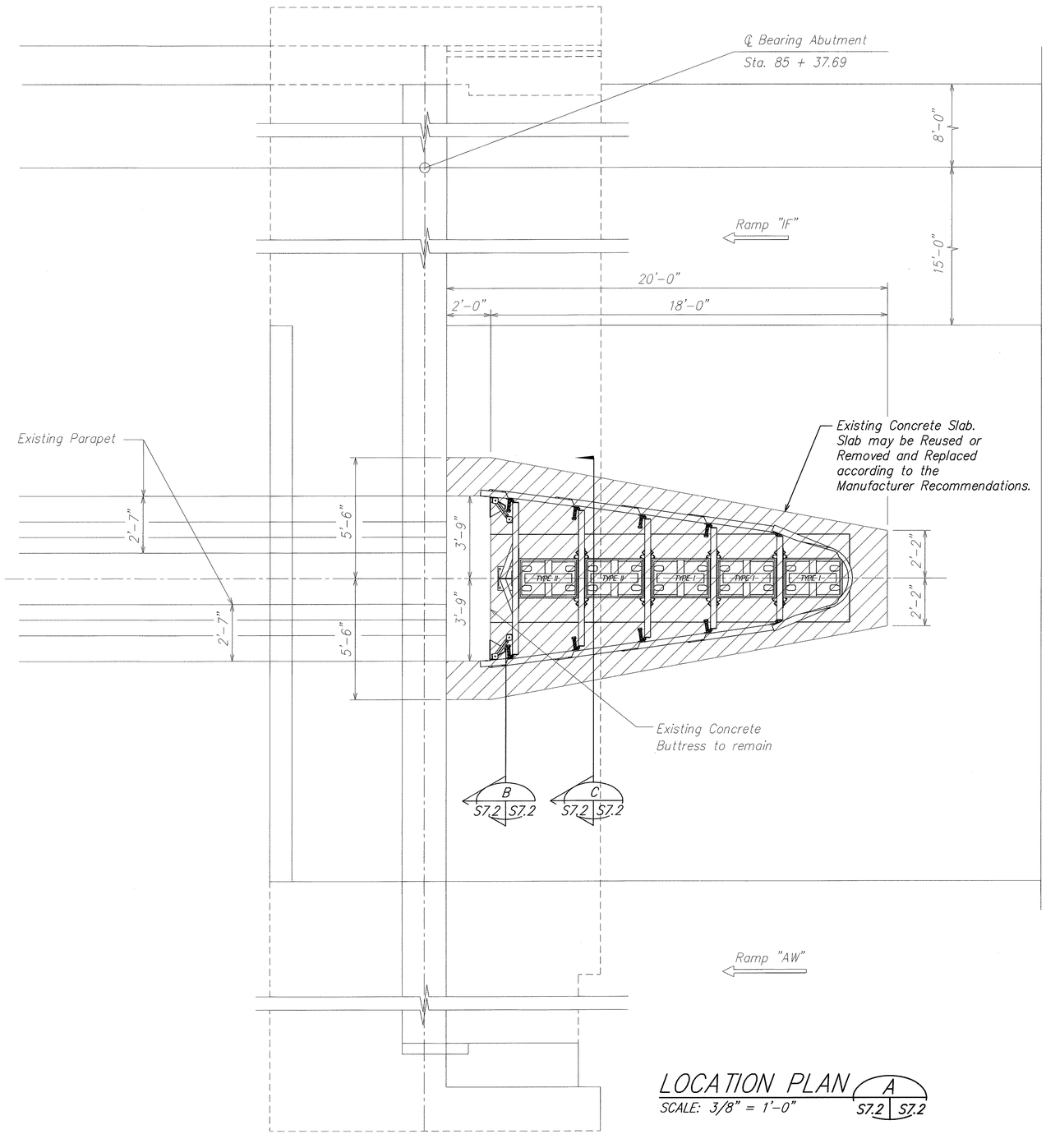

LOCATION PLAN

SCALE: 3/8" = 1'-0"

A S7.2 | S7.2

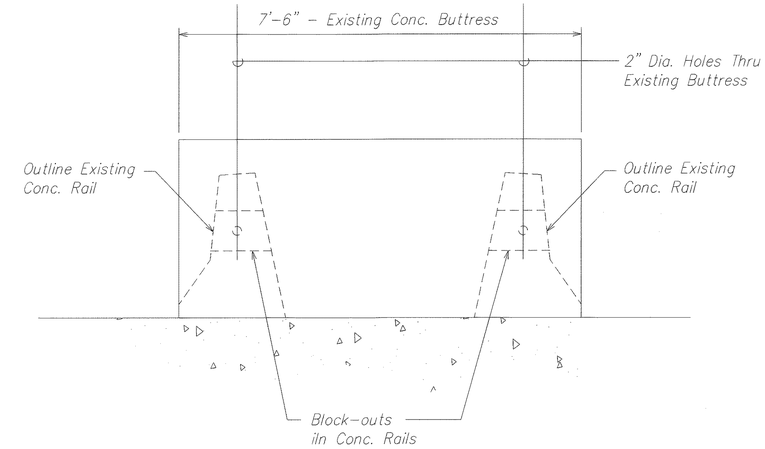

EXISTING CONCRETE BUTTRESS AND RAILING ELEVATION

SCALE: 3/4" = 1'-0"

B S7.2 | S7.2

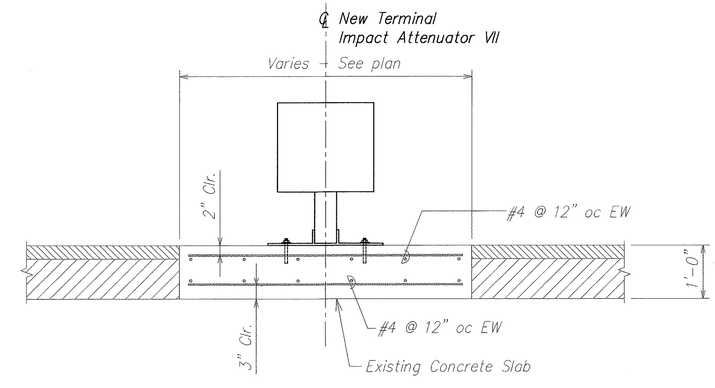

EXISTING CONCRETE PAD SECTION

SCALE: 3/4" = 1'-0"

C S7.2 | S7.2

ORIGINAL PLAN	SURVEY PLOTTED BY	DATE
	DRAWN BY	
	TRACED BY	
NOTE BOOK	DESIGNED BY	
	QUANTITIES BY	
No.	CHECKED BY	

DAVID K. FUJIWARA
LICENSED PROFESSIONAL ENGINEER
NO. 8104-S
HAWAII, U.S.A.

THIS WORK WAS PREPARED BY ME OR UNDER MY SUPERVISION.

SIGNATURE — EXPIRATION DATE OF THE LICENSE 4-30-04

STATE OF HAWAII
DEPARTMENT OF TRANSPORTATION
HIGHWAYS DIVISION

LOCATION PLAN
RAMP IF
INTERSTATE ROUTE H-1
GUARDRAIL AND SHOULDER IMPROVEMENTS
Airport Interchange to Middle Street
Federal Aid Project No. IM-H1-1(240)

SCALE: As Noted — DATE: OCTOBER 2003

SHEET No. S7.2 OF 111 SHEETS

FILE: P17572.DWG
PLOT: 1 = 1

\\Cad1\vol\2000\0066-H1 GUARDRAIL\11-05-03\PCGS0702.dwg, 11/4/2003 3:33:18 PM, KSFinc.pc3, 1:1

FED. ROAD DIST. NO.	STATE	FED. AID PROJ. NO.	FISCAL YEAR	SHEET NO.	TOTAL SHEETS
HAWAII	HAW.	IM-H1-1(240)	2004	52	143

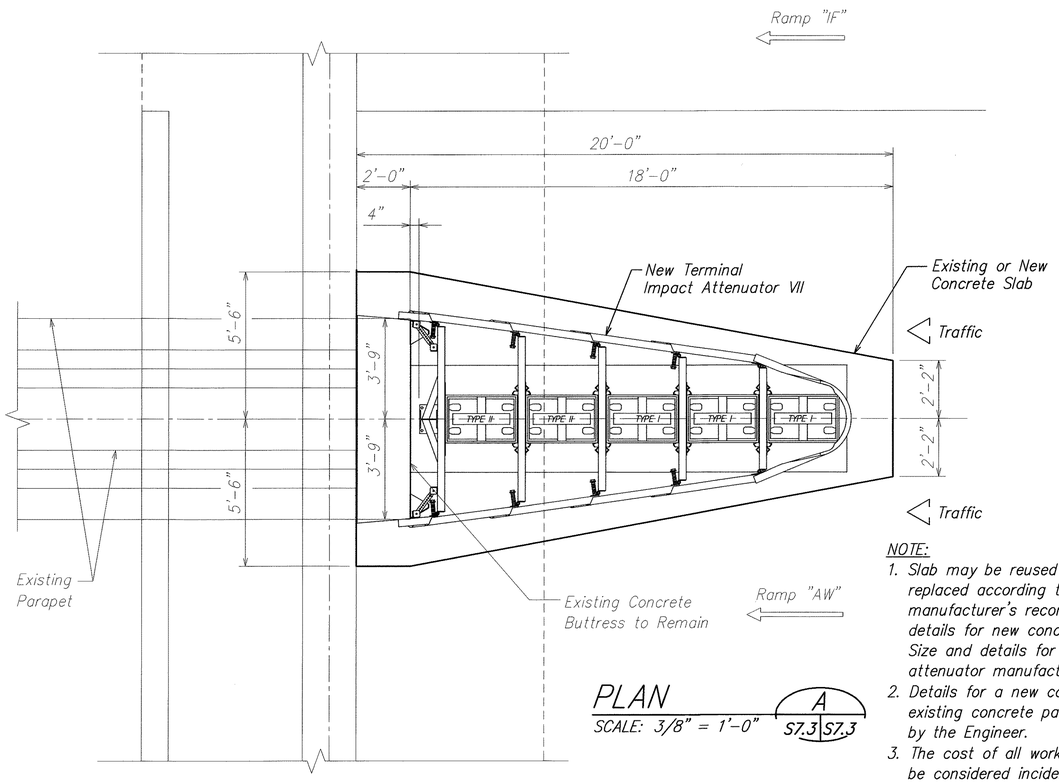

PLAN (A, S7.3 | S7.3)
SCALE: 3/8" = 1'-0"

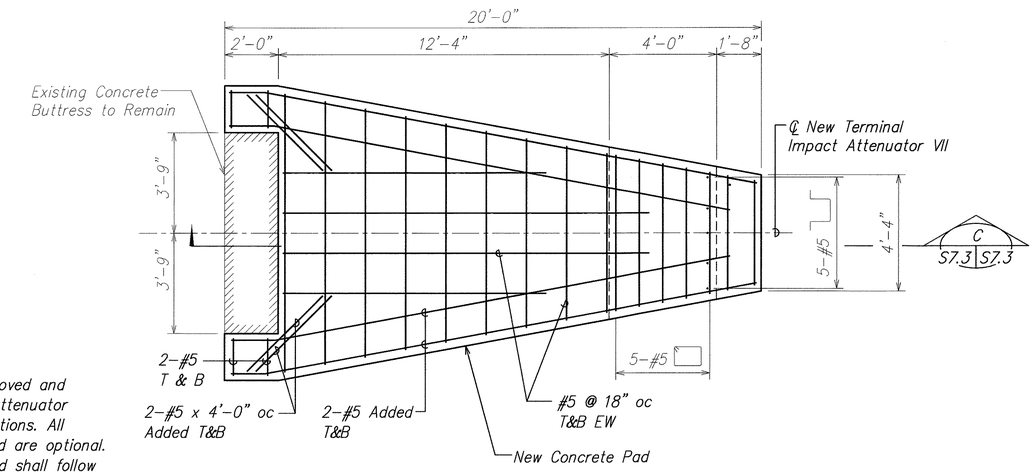

NEW CONCRETE PAD DETAIL (OPTIONAL) (B, S7.3 | S7.3)
SCALE: 3/8" = 1'-0"

NOTE:

1. Slab may be reused or removed and replaced according to the attenuator manufacturer's recommendations. All details for new concrete pad are optional. Size and details for new pad shall follow attenuator manufacturer's recommendations.
2. Details for a new concrete pad or for reusing the existing concrete pad shall be submitted for approval by the Engineer.
3. The cost of all work relating to the concrete pad shall be considered incidental to Section 693 – Terminal Impact Attenuator.

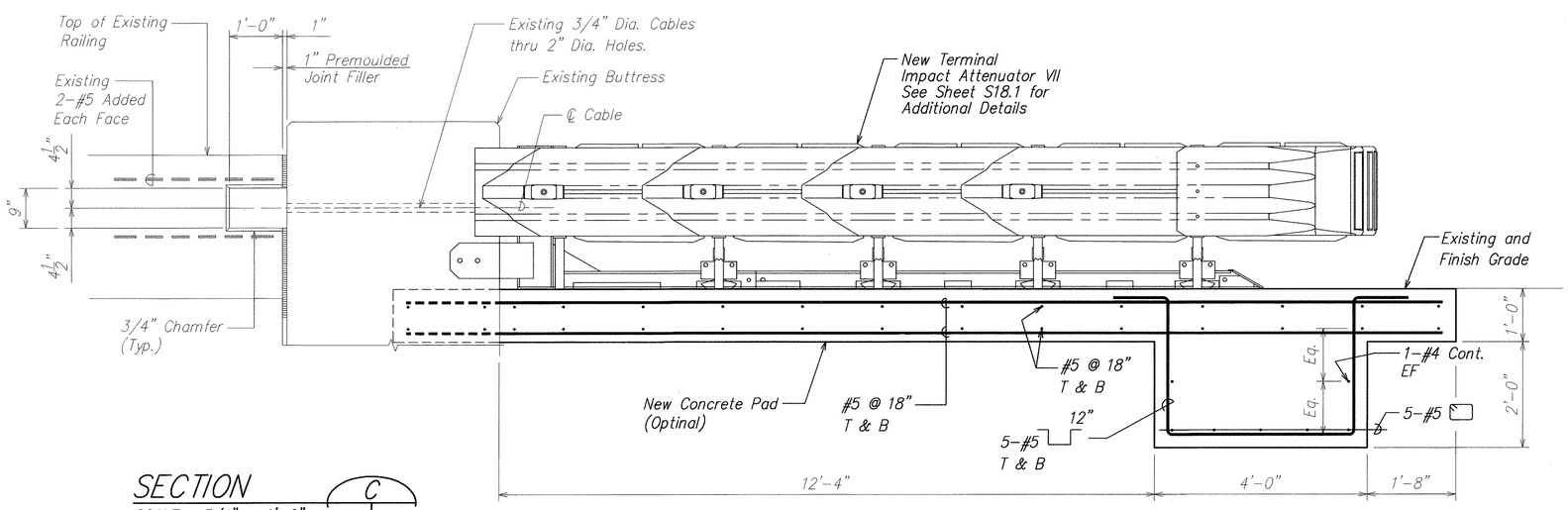

SECTION (C, S7.3 | S7.3)
SCALE: 3/4" = 1'-0"

DAVID K. FUJIWARA LICENSED PROFESSIONAL ENGINEER NO. 8104-S HAWAII, U.S.A.

THIS WORK WAS PREPARED BY ME OR UNDER MY SUPERVISION.

SIGNATURE — EXPIRATION DATE OF THE LICENSE 4-30-04

STATE OF HAWAII
DEPARTMENT OF TRANSPORTATION
HIGHWAYS DIVISION

ELEVATON, DETAIL AND SECTION
RAMP IF
INTERSTATE ROUTE H-1
GUARDRAIL AND SHOULDER IMPROVEMENTS
Airport Interchange to Middle Street
Federal Aid Project No. IM-H1-1(240)

SCALE: As Noted — DATE: OCTOBER 2003

SHEET No. S7.3 OF 111 SHEETS

ORIGINAL PLAN — SURVEY PLOTTED BY — DRAWN BY — TRACED BY — DESIGNED BY — QUANTITIES BY — CHECKED BY — DATE — NOTE BOOK No.

FILE: PCGS73.DWG
PLOT: 1 = 1

\\Cad1\vsf\2000\0066-H1 GUARDRAIL\11-05-03\PCGS0703.dwg, 11/4/2003 3:34:01 PM, KSFinc.pc3, 1:1

FED. ROAD DIST. NO.	STATE	FED. AID PROJ. NO.	FISCAL YEAR	SHEET NO.	TOTAL SHEETS
HAWAII	HAW.	IM-H1-1(240)	2004	53	143

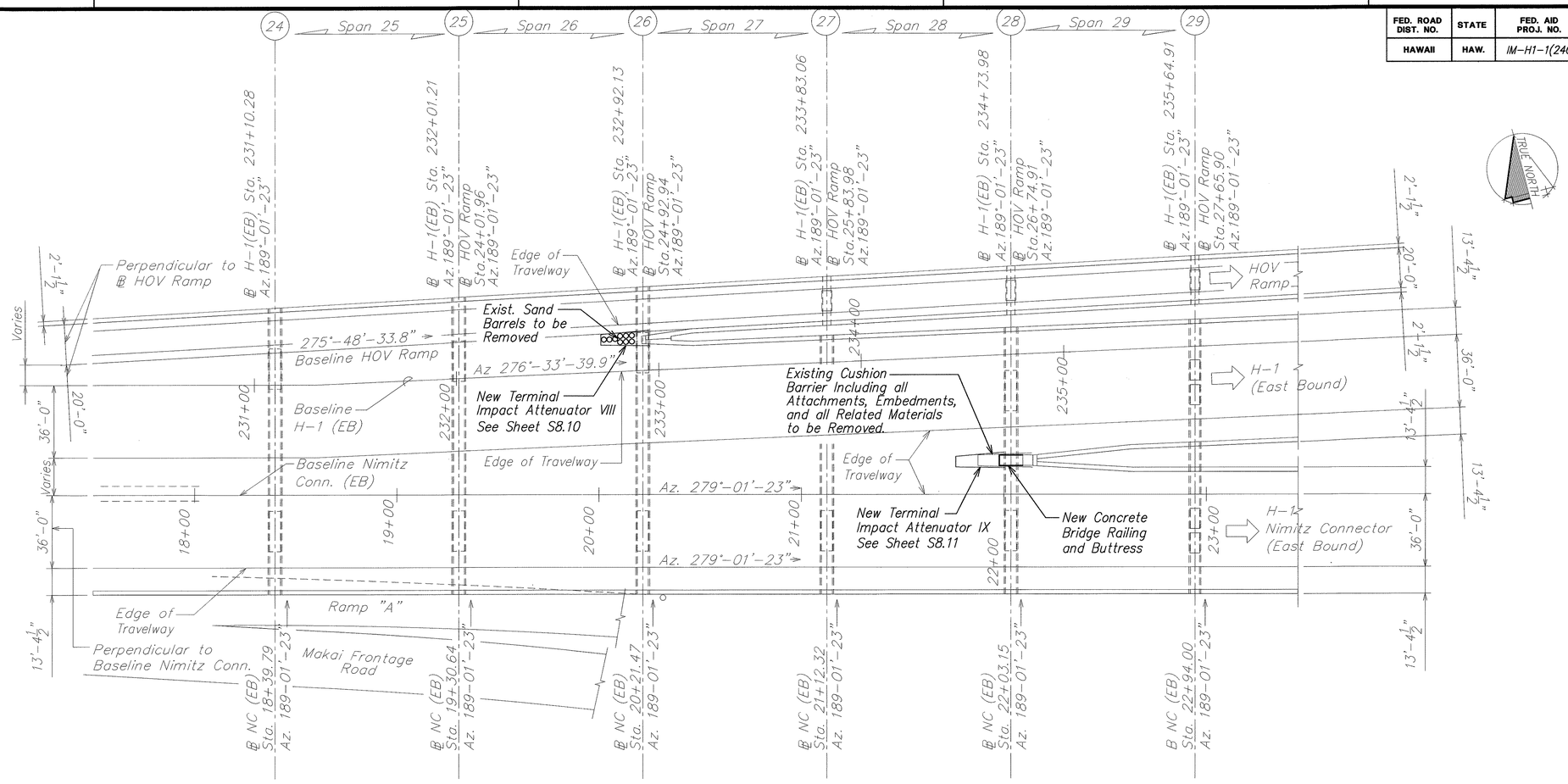

PARTIAL VIADUCT LAYOUT PLAN

SCALE: 1" = 30'-0"

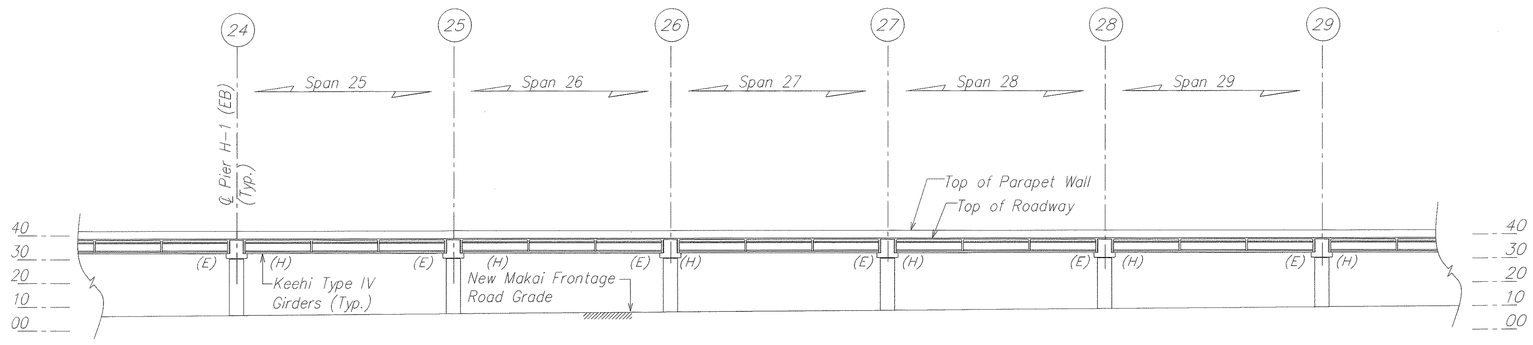

PARTIAL LONGITUDINAL SECTION ALONG BASELINE H-1 (EB)

SCALE: 1" = 30'-0"

DAVID K. FUJIWARA LICENSED PROFESSIONAL ENGINEER NO. 8104-S HAWAII, U.S.A.

THIS WORK WAS PREPARED BY ME OR UNDER MY SUPERVISION.

SIGNATURE — EXPIRATION DATE OF THE LICENSE 4-30-04

STATE OF HAWAII
DEPARTMENT OF TRANSPORTATION
HIGHWAYS DIVISION

PLAN AND ELEVATION
KEEHI INTERCHANGE
INTERSTATE ROUTE H-1
GUARDRAIL AND SHOULDER IMPROVEMENTS
Airport Interchange to Middle Street
Federal Aid Project No. IM-H1-1(240)

SCALE: As Noted — DATE: OCTOBER 2003

SHEET No. S8.1 OF 111 SHEETS

ORIGINAL PLAN — SURVEY PLOTTED BY — DRAWN BY — NOTE BOOK — PLOTTED BY — DESIGNED BY — QUANTITIES BY — CHECKED BY — DATE — No.

FILE: PCGS81.DWG
PLOT: 1 = 1

C:\KSF\GUARDRAIL\10-24-03\PCGS0801.dwg, 10/23/2003 4:13:58 PM, KSFinc.pc3, 1:1

FED. ROAD DIST. NO.	STATE	FED. AID PROJ. NO.	FISCAL YEAR	SHEET NO.	TOTAL SHEETS
HAWAII	HAW.	IM-H1-1(240)	2004	ADD. 54	143

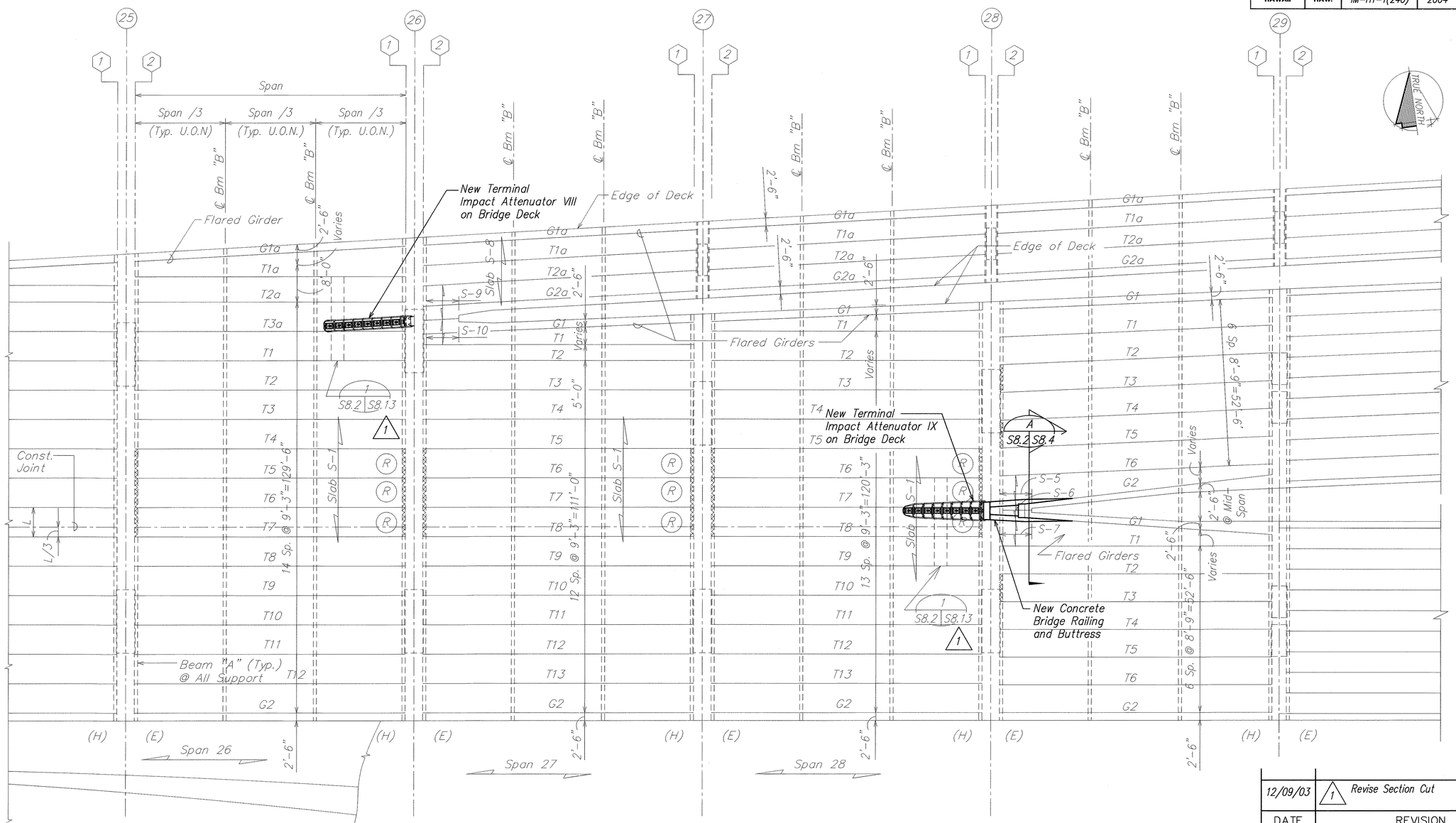

PARTIAL DECK FRAMING PLAN

SCALE: 1/16" = 1'-0"

LEGEND:

(E) = Expansion End of Girder
(H) = Hinge End of Girder
(R) = One Set of Hinge Restrainer Location (Below Deck)

ORIGINAL PLAN	SURVEY PLOTTED BY	DATE
	TRACED BY	"
NOTE BOOK	DESIGNED BY	"
	QUANTITIES BY	"
No.	CHECKED BY	"

DATE	REVISION
12/09/03	1 Revise Section Cut

DAVID K. FUJIWARA LICENSED PROFESSIONAL ENGINEER NO. 8104-S HAWAII, U.S.A.

THIS WORK WAS PREPARED BY ME OR UNDER MY SUPERVISION.

SIGNATURE — EXPIRATION DATE OF THE LICENSE 4-30-04

STATE OF HAWAII
DEPARTMENT OF TRANSPORTATION
HIGHWAYS DIVISION

DECK FRAMING PLAN
KEEHI INTERCHANGE
INTERSTATE ROUTE H-1
GUARDRAIL AND SHOULDER IMPROVEMENTS
Airport Interchange to Middle Street
Federal Aid Project No. IM-H1-1(240)

SCALE: As Noted — DATE: OCTOBER 2003

SHEET No. S8.2 OF 111 SHEETS

ADD. 54

FILE: PCGS82.DWG
PLOT: 1 = 1

\\Cad\ksf\2000\0066-H1 GUARDRAIL\12-08-03 ADD1\ADD1 PCGS0801.dwg, 12/8/2003 9:15:34 AM, KSFinc.pc3, 1:1

FED. ROAD DIST. NO.	STATE	FED. AID PROJ. NO.	FISCAL YEAR	SHEET NO.	TOTAL SHEETS
HAWAII	HAW.	IM-H1-1(240)	2004	55	143

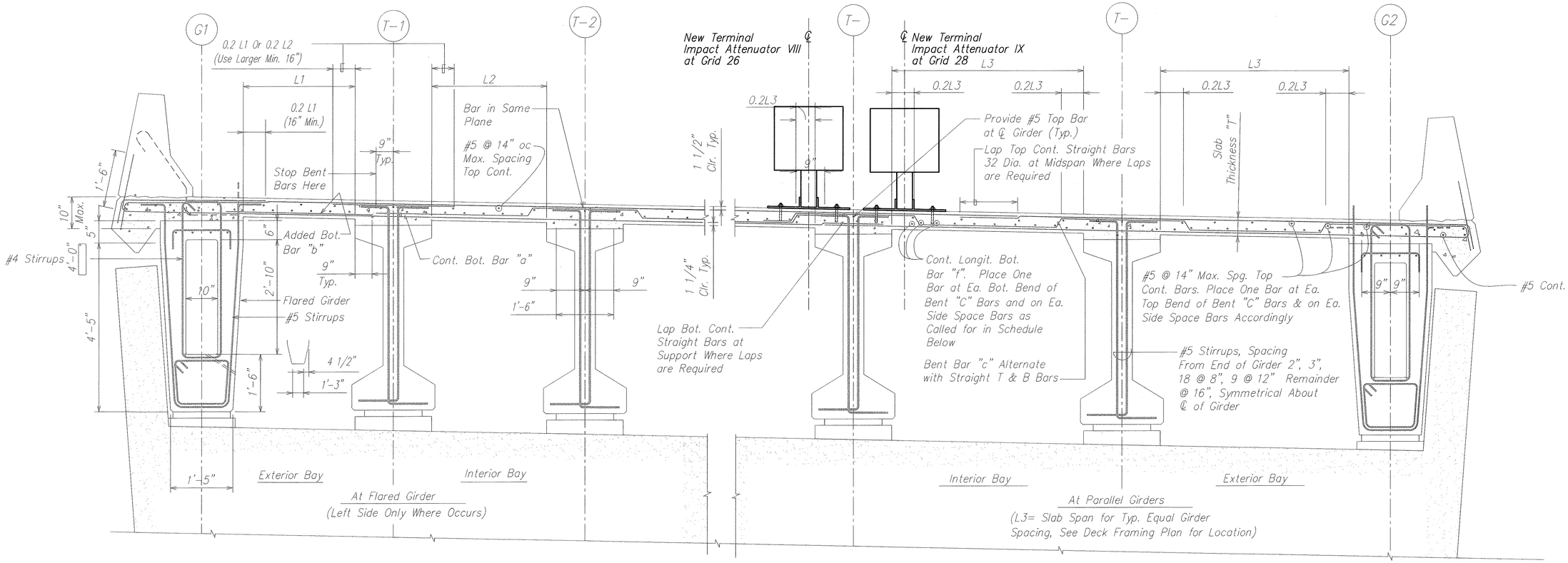

PARTIAL EXISTING DECK SECTION SHOWING TYPICAL DECK SLAB REINFORCING

A
S8.3 | S8.3

SCALE: 3/4" = 1'-0"

NOTE:
All reinforcing on this sheet are existing bars.

SLAB REINFORCING SCHEDULE

Slab Mark No.	Slab Thickness "T"	Main Transverse Reinforcing				Long. Reinforcing		Remarks
		Bottom Bar "a"	Add Bottom Bar "b"	Bent Bar "c"	Top Bar "d"	Add Top Bar "e"	Bot. Dist. Bar "f"	
S-1	7 1/4"	#5 @ 10"	#5 @ 10"	#5 @ 10"	#5 @ 10"	#5 @ 10"	#5 @ 8"	
S-3	7"	#5 @ 11"	#5 @ 11"	#5 @ 11"	#5 @ 11"	#5 @ 11"	#5 @ 8"	
S-4	7 3/4"	#5 @ 9"	#5 @ 9"	#5 @ 9"	#5 @ 9"	#5 @ 9"	#5 @ 7"	
S-5	7 1/2"	#5 @ 11"	#5 @ 11"		#5 @ 11"	#5 @ 11"	#5 @ 7 1/2"	
S-6	7 1/2"	#5 @ 5 1/2"			#5 @ 12"		#5 @ 8"	
S-7	7 1/2"	#5 @ 11"	#5 @ 11"		#5 @ 11"	#5 @ 11"	#5 @ 7 1/2"	
S-8	6 1/4"	#5 @ 13"		#5 @ 13"	#5 @ 13"		#5 @ 9 1/2"	
S-9	6 1/4"	#5 @ 13"	#5 @ 13"		#5 @ 13"	#5 @ 13"	#5 @ 9 1/2"	
S-10	7 1/4"	#5 @ 10"	#5 @ 10"		#5 @ 10"	#5 @ 10"	#5 @ 8"	

ORIGINAL PLAN
NOTE BOOK No.
SURVEY PLOTTED BY
DRAWN BY
TRACED BY
DESIGNED BY
QUANTITIES BY
CHECKED BY
DATE

DAVID K. FUJIWARA
LICENSED PROFESSIONAL ENGINEER
NO. 8104-S
HAWAII, U.S.A.

THIS WORK WAS PREPARED BY ME OR UNDER MY SUPERVISION.

SIGNATURE — EXPIRATION DATE OF THE LICENSE 4-30-04

STATE OF HAWAII
DEPARTMENT OF TRANSPORTATION
HIGHWAYS DIVISION

PARTIAL DECK SECTION
KEEHI INTERCHANGE
INTERSTATE ROUTE H-1
GUARDRAIL AND SHOULDER IMPROVEMENTS
Airport Interchange to Middle Street
Federal Aid Project No. IM-H1-1(240)

SCALE: As Noted — DATE: OCTOBER 2003

SHEET No. S8.3 OF 111 SHEETS

FILE: PCGS83.DWG
PLOT: 1 = 1

C:\KSF\GUARDRAIL\10-24-03\PCGS0803.dwg, 10/23/2003 4:15:18 PM, KSFinc.pc3, 1:1

FED. ROAD DIST. NO.	STATE	FED. AID PROJ. NO.	FISCAL YEAR	SHEET NO.	TOTAL SHEETS
HAWAII	HAW.	IM-H1-1(240)	2004	56	143

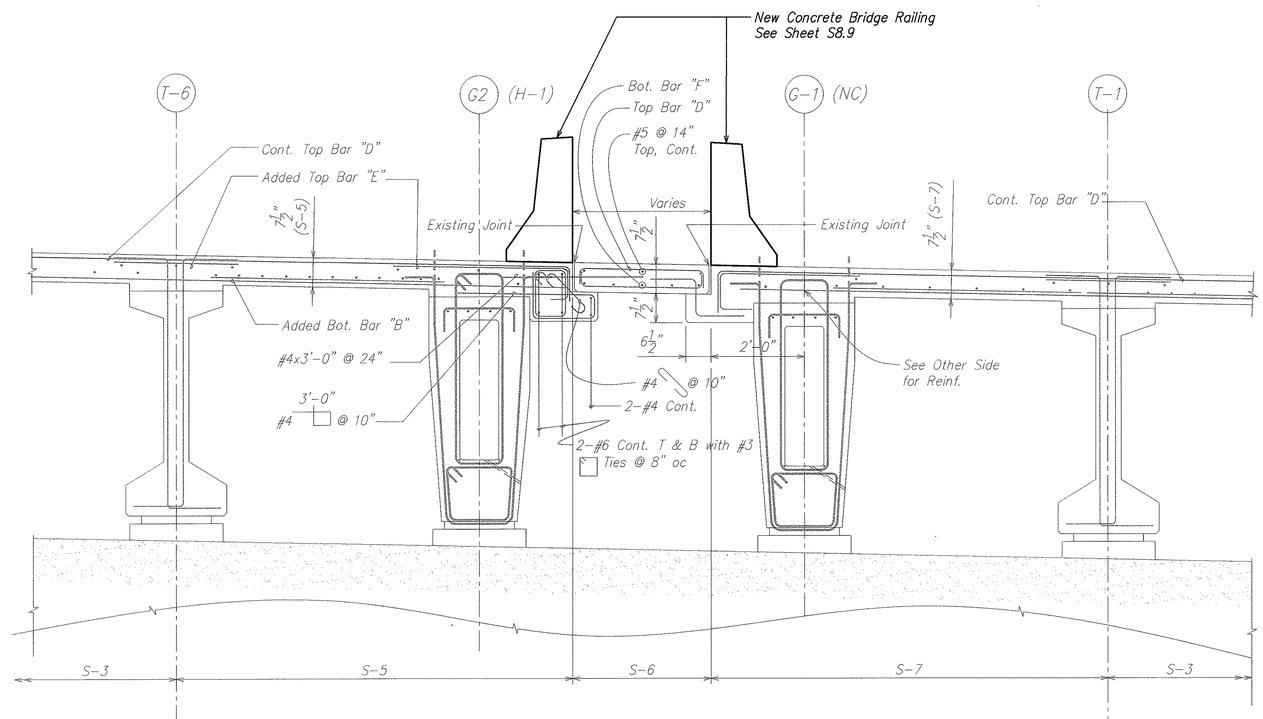

PARTIAL EXISTING DECK SECTION AT DECK JOINT AT PIER 28 (A)

SCALE: NOT TO SCALE

S8.2 | S8.4

NOTES:

1. All reinforcing on this sheet are existing bars.
2. See table on sheet S8.3 for slab reinforcing.

ORIGINAL PLAN	SURVEY PLOTTED BY	DATE
	DRAWN BY	"
	TRACED BY	"
NOTE BOOK	DESIGNED BY	"
	QUANTITIES BY	"
No.	CHECKED BY	"

DAVID K. FUJIWARA
LICENSED PROFESSIONAL ENGINEER
NO. 8104-S
HAWAII, U.S.A.

THIS WORK WAS PREPARED BY ME OR UNDER MY SUPERVISION.

SIGNATURE — EXPIRATION DATE OF THE LICENSE 4-30-04

STATE OF HAWAII
DEPARTMENT OF TRANSPORTATION
HIGHWAYS DIVISION

PARTIAL DECK SECTION
KEEHI INTERCHANGE
INTERSTATE ROUTE H-1
GUARDRAIL AND SHOULDER IMPROVEMENTS
Airport Interchange to Middle Street
Federal Aid Project No. IM-H1-1(240)

SCALE: As Noted — DATE: OCTOBER 2003

SHEET No. S8.4 OF 111 SHEETS

FILE: PCGS84.DWG
PLOT: 1 = 1

C:\KSF\GUARDRAIL\10-24-03\PCGS0804.dwg, 10/23/2003 4:16:54 PM, KSFinc.pc3, 1:1

FED. ROAD DIST. NO.	STATE	FED. AID PROJ. NO.	FISCAL YEAR	SHEET NO.	TOTAL SHEETS
HAWAII	HAW.	IM-H1-1(240)	2004	57	143

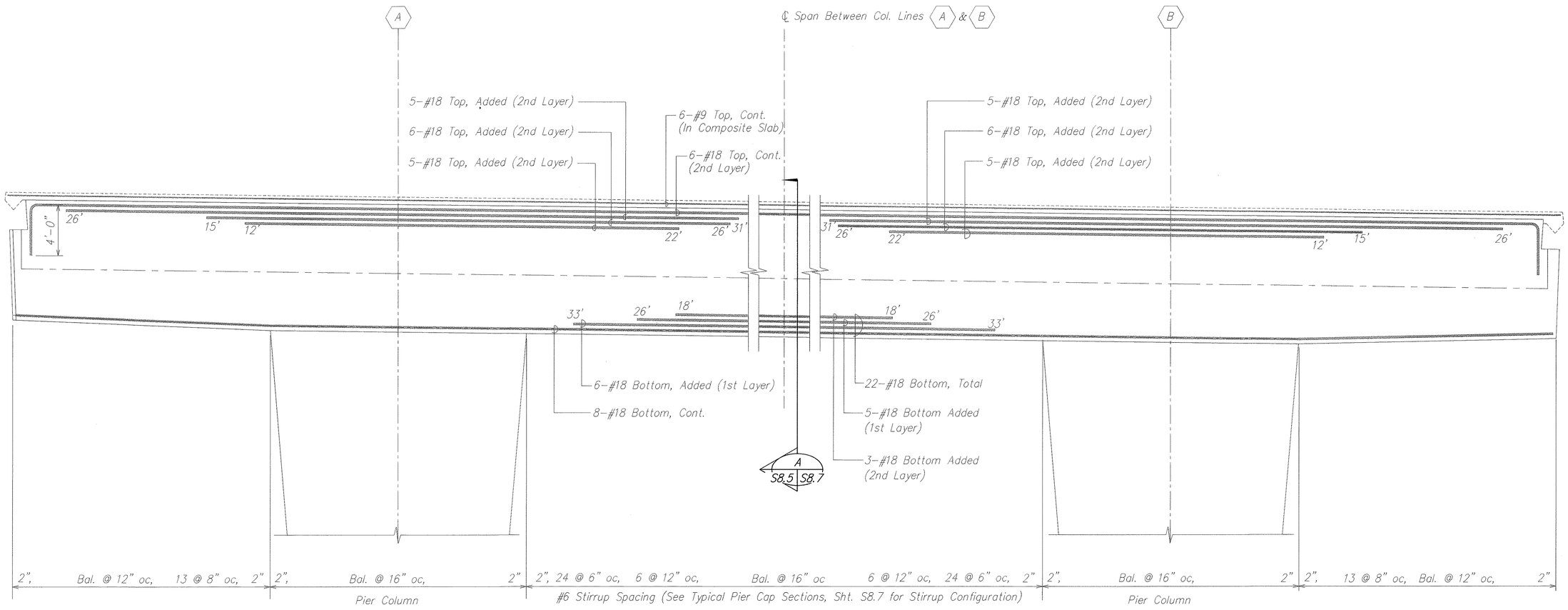

NOTE:
All reinforcing on this sheet are existing bars.

EXISTING REINFORCING
PIER NO. 26 (TYPE V PIER) A S8.5 S8.5

SCALE: 1/4" = 1'-0"

ORIGINAL PLAN	SURVEY PLOTTED BY	DATE
	DRAWN BY	
	TRACED BY	
NOTE BOOK	DESIGNED BY	
	QUANTITIES BY	
No.	CHECKED BY	

DAVID K. FUJIWARA
LICENSED PROFESSIONAL ENGINEER
NO. 8104-S
HAWAII, U.S.A.

THIS WORK WAS PREPARED BY ME OR UNDER MY SUPERVISION.

SIGNATURE — EXPIRATION DATE OF THE LICENSE 4-30-04

STATE OF HAWAII
DEPARTMENT OF TRANSPORTATION
HIGHWAYS DIVISION

PIER SECTION
KEEHI INTERCHANGE
INTERSTATE ROUTE H-1
GUARDRAIL AND SHOULDER IMPROVEMENTS
Airport Interchange to Middle Street
Federal Aid Project No. IM-H1-1(240)

SCALE: As Noted DATE: OCTOBER 2003

SHEET No. S8.5 OF 111 SHEETS

FILE: PCGS85.DWG
PLOT: 1 = 1

C:\KSF\GUARDRAIL\10-24-03\PCGS0805.dwg, 10/23/2003 4:18:00 PM, KSFinc.pc3, 1:1

FED. ROAD DIST. NO.	STATE	FED. AID PROJ. NO.	FISCAL YEAR	SHEET NO.	TOTAL SHEETS
HAWAII	HAW.	IM-H1-1(240)	2004	58	143

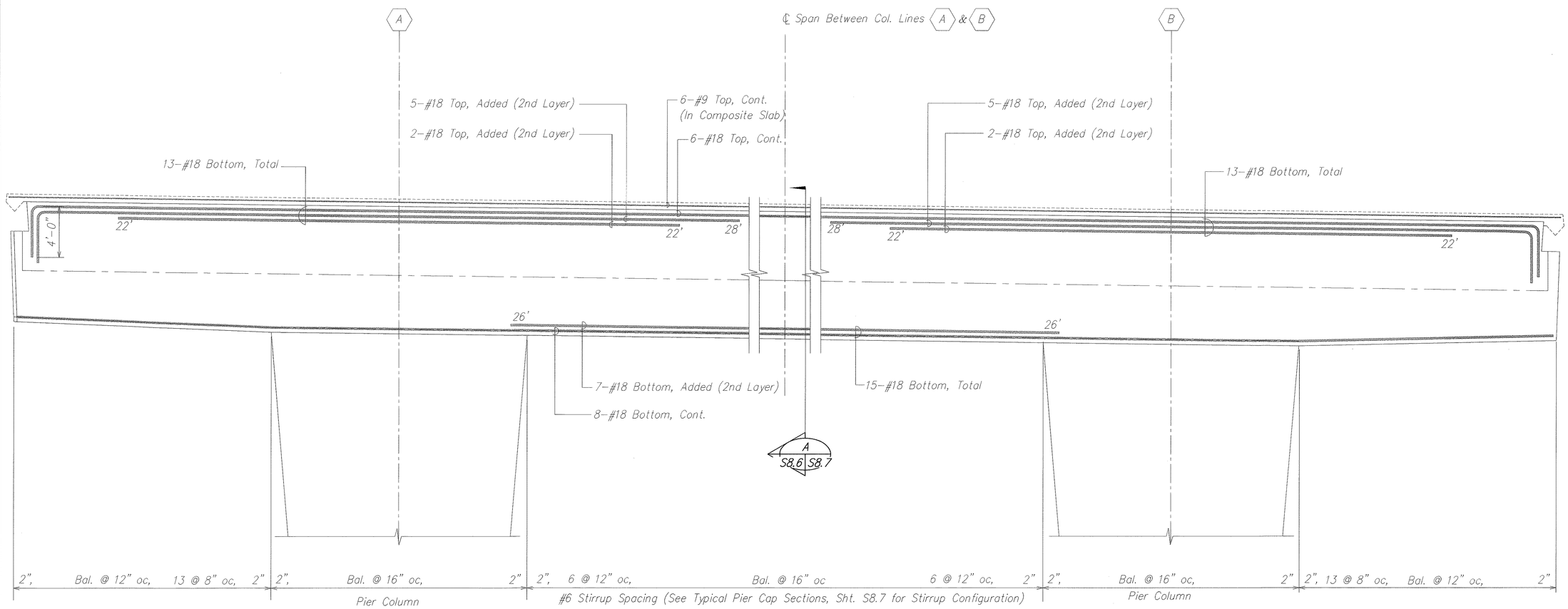

NOTE:

All reinforcing on this sheet are existing bars.

EXISTING REINFORCING
PIER NO. 28 (TYPE V PIER)

A
S8.6 S8.6

SCALE: 1/4" = 1'-0"

ORIGINAL PLAN	SURVEY PLOTTED BY	DATE
	DRAWN BY	
NOTE BOOK	TRACED BY	
	DESIGNED BY	
	QUANTITIES BY	
No.	CHECKED BY	

DAVID K. FUJIWARA
LICENSED PROFESSIONAL ENGINEER
NO. 8104-S
HAWAII, U.S.A.

THIS WORK WAS PREPARED BY ME OR UNDER MY SUPERVISION.

David K. Fujiwara 4-30-04
SIGNATURE EXPIRATION DATE OF THE LICENSE

STATE OF HAWAII
DEPARTMENT OF TRANSPORTATION
HIGHWAYS DIVISION

PIER SECTION
KEEHI INTERCHANGE
INTERSTATE ROUTE H-1
GUARDRAIL AND SHOULDER IMPROVEMENTS
Airport Interchange to Middle Street
Federal Aid Project No. IM-H1-1(240)

SCALE: As Noted DATE: OCTOBER 2003

SHEET No. S8.6 OF 111 SHEETS

FILE: PCGS86.DWG
PLOT: 1 = 1

C:\KSF\GUARDRAIL\10-24-03\PCGS0806.dwg, 10/23/2003 4:19:07 PM, KSFinc.pc3, 1:1

FED. ROAD DIST. NO.	STATE	FED. AID PROJ. NO.	FISCAL YEAR	SHEET NO.	TOTAL SHEETS
HAWAII	HAW.	IM-H1-1(240)	2004	59	143

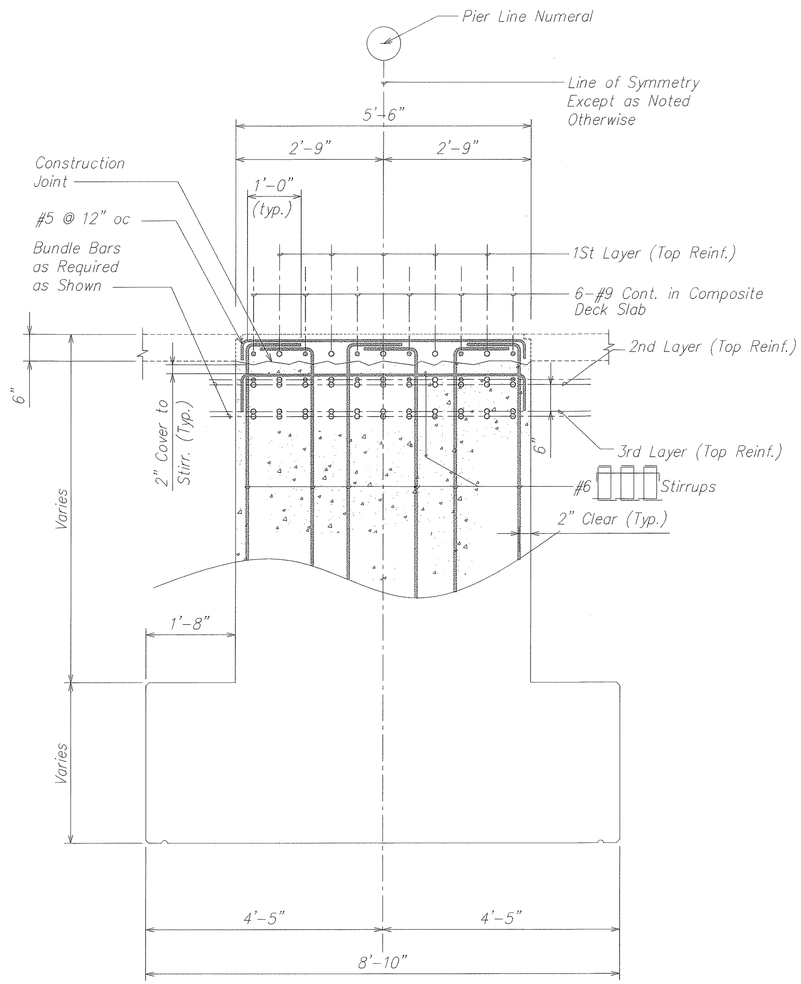

NOTE:
All reinforcing on this sheet are existing bars.

EXISTING PIER SECTION AT GIRDER SHELF A

SCALE: NOT TO SCALE

S8.5 | S8.7
S8.6

ORIGINAL PLAN	SURVEY PLOTTED BY	DATE
	DRAWN BY	
NOTE BOOK	TRACED BY	
	DESIGNED BY	
	QUANTITIES BY	
No.	CHECKED BY	

DAVID K. FUJIWARA
LICENSED PROFESSIONAL ENGINEER
NO. 8104-S
HAWAII, U.S.A.

THIS WORK WAS PREPARED BY ME OR UNDER MY SUPERVISION.

SIGNATURE — EXPIRATION DATE OF THE LICENSE 4-30-04

STATE OF HAWAII
DEPARTMENT OF TRANSPORTATION
HIGHWAYS DIVISION

SECTION
KEEHI INTERCHANGE
INTERSTATE ROUTE H-1
GUARDRAIL AND SHOULDER IMPROVEMENTS
Airport Interchange to Middle Street
Federal Aid Project No. IM-H1-1(240)

SCALE: As Noted — DATE: OCTOBER 2003

SHEET No. S8.7 OF 111 SHEETS

FILE: PCGS87.DWG
PLOT: 1 = 1

C:\KSF\GUARDRAIL\10-24-03\PCGS0807.dwg, 10/23/2003 4:19:51 PM, KSFinc.pc3, 1:1

FED. ROAD DIST. NO.	STATE	FED. AID PROJ. NO.	FISCAL YEAR	SHEET NO.	TOTAL SHEETS
HAWAII	HAW.	IM-H1-1(240)	2004	60	143

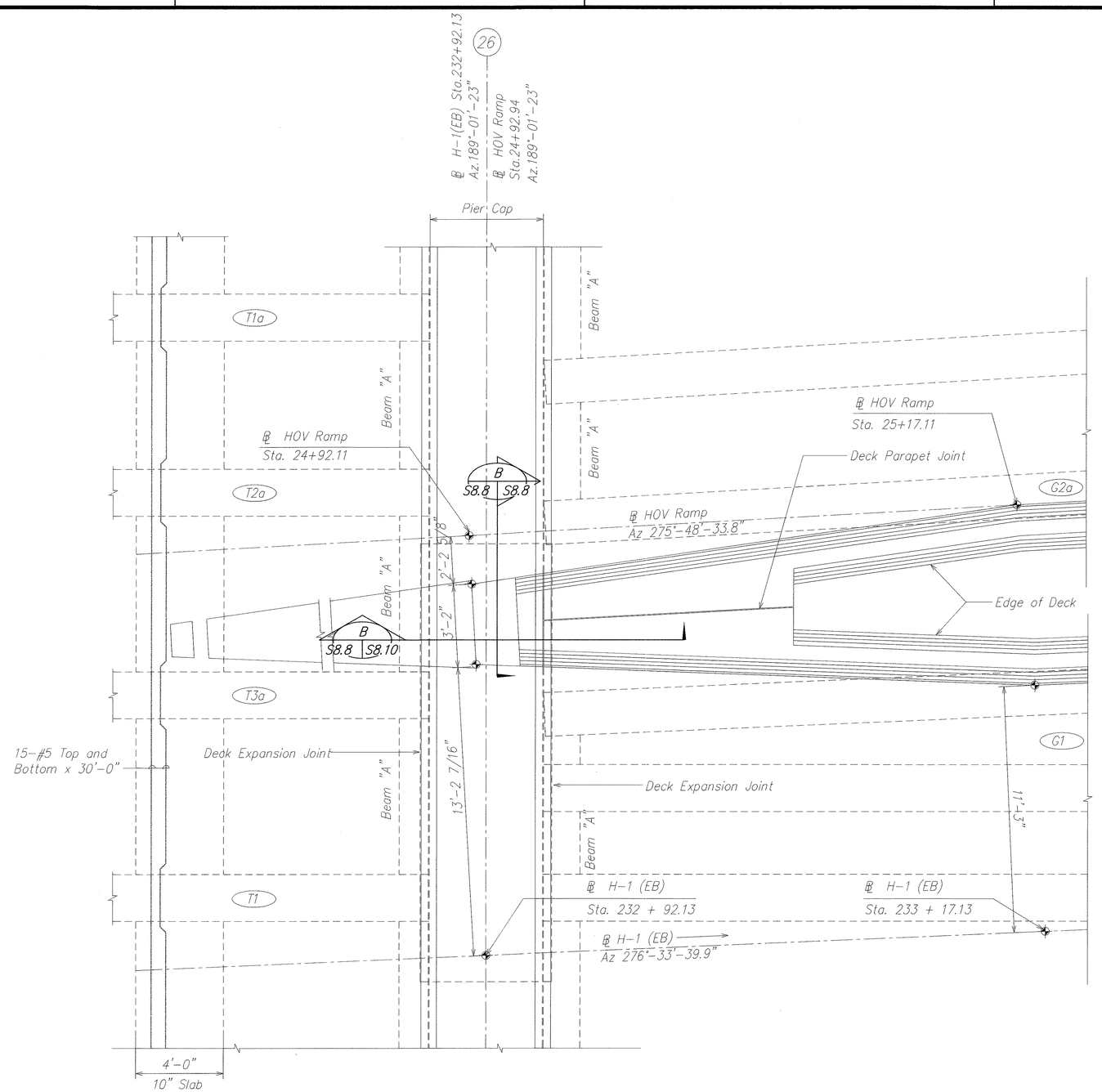

PARTIAL EXISTING DECK PLAN
BETWEEN PIER 26 & 27 AT H-1 (EB) & HOV RAMP (A / S8.1 | S8.8)

SCALE: 3/8" = 1'-0"

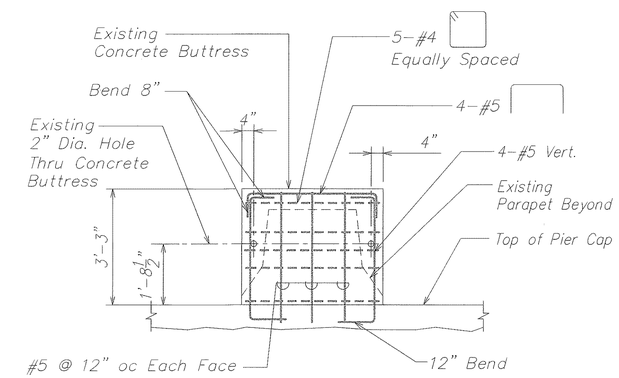

SECTION (B / S8.8 | S8.8)

SCALE: 1/2" = 1'-0"

NOTE:
All reinforcing on this sheet are existing bars.

ORIGINAL PLAN	SURVEY PLOTTED BY	DATE
	DRAWN BY	
	TRACED BY	
NOTE BOOK	DESIGNED BY	
	QUANTITIES BY	
No.	CHECKED BY	

DAVID K. FUJIHARA
LICENSED PROFESSIONAL ENGINEER
NO. 8104-S
HAWAII, U.S.A.

THIS WORK WAS PREPARED BY ME OR UNDER MY SUPERVISION.

SIGNATURE — EXPIRATION DATE OF THE LICENSE 4-30-04

STATE OF HAWAII
DEPARTMENT OF TRANSPORTATION
HIGHWAYS DIVISION

PARTIAL DECK PLAN
KEEHI INTERCHANGE
INTERSTATE ROUTE H-1
GUARDRAIL AND SHOULDER IMPROVEMENTS
Airport Interchange to Middle Street
Federal Aid Project No. IM-H1-1(240)

SCALE: As Noted — DATE: OCTOBER 2003

SHEET No. S8.8 OF 111 SHEETS

FILE: HWY08S-15
PLOT: 1 = 1

C:\KSF\GUARDRAIL\10-24-03\PCGS0808.dwg, 10/23/2003 4:20:57 PM, KSFinc.pc3, 1:1

FED. ROAD DIST. NO.	STATE	FED. AID PROJ. NO.	FISCAL YEAR	SHEET NO.	TOTAL SHEETS
HAWAII	HAW.	IM-H1-1(240)	2004	61	143

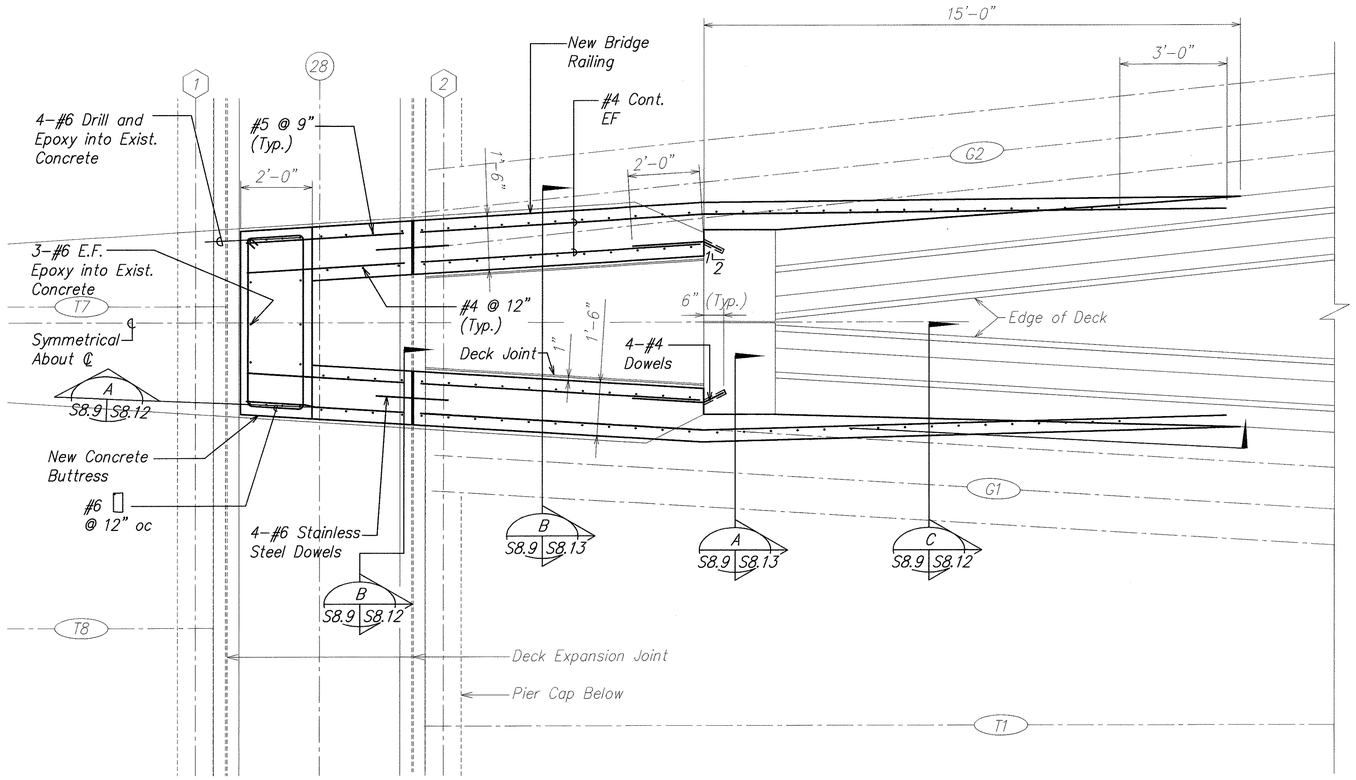

NOTE:

New concrete buttress shall be considered incidental to the new concrete bridge railings and shall not be paid for separately.

PARTIAL EXISTING DECK PLAN BETWEEN PIER 28 & 29 AT H-1 (EB) & B NC (EB) (A S8.1 S8.9)

SCALE: 1/2" = 1'-0"

ORIGINAL PLAN	SURVEY PLOTTED BY	DATE
	DRAWN BY	
NOTE BOOK	TRACED BY	
	DESIGNED BY	
	QUANTITIES BY	
No.	CHECKED BY	

DAVID K. FUJIHARA LICENSED PROFESSIONAL ENGINEER NO. 8104-S HAWAII, U.S.A.

THIS WORK WAS PREPARED BY ME OR UNDER MY SUPERVISION.

SIGNATURE — EXPIRATION DATE OF THE LICENSE 4-30-04

STATE OF HAWAII
DEPARTMENT OF TRANSPORTATION
HIGHWAYS DIVISION

PARTIAL DECK PLAN
KEEHI INTERCHANGE
INTERSTATE ROUTE H-1
GUARDRAIL AND SHOULDER IMPROVEMENTS
Airport Interchange to Middle Street
Federal Aid Project No. IM-H1-1(240)

SCALE: As Noted — DATE: OCTOBER 2003

SHEET No. S8.9 OF 111 SHEETS

FILE: PCGS89.DWG
PLOT: 1 = 1

\\Cad\ksf\2000\0066-H1 GUARDRAIL\11-05-03\PCGS0809.dwg, 11/5/2003 10:51:17 AM, KSFinc.pc3, 1:1

FED. ROAD DIST. NO.	STATE	FED. AID PROJ. NO.	FISCAL YEAR	SHEET NO.	TOTAL SHEETS
HAWAII	HAW.	IM-H1-1(240)	2004	ADD. 62	143

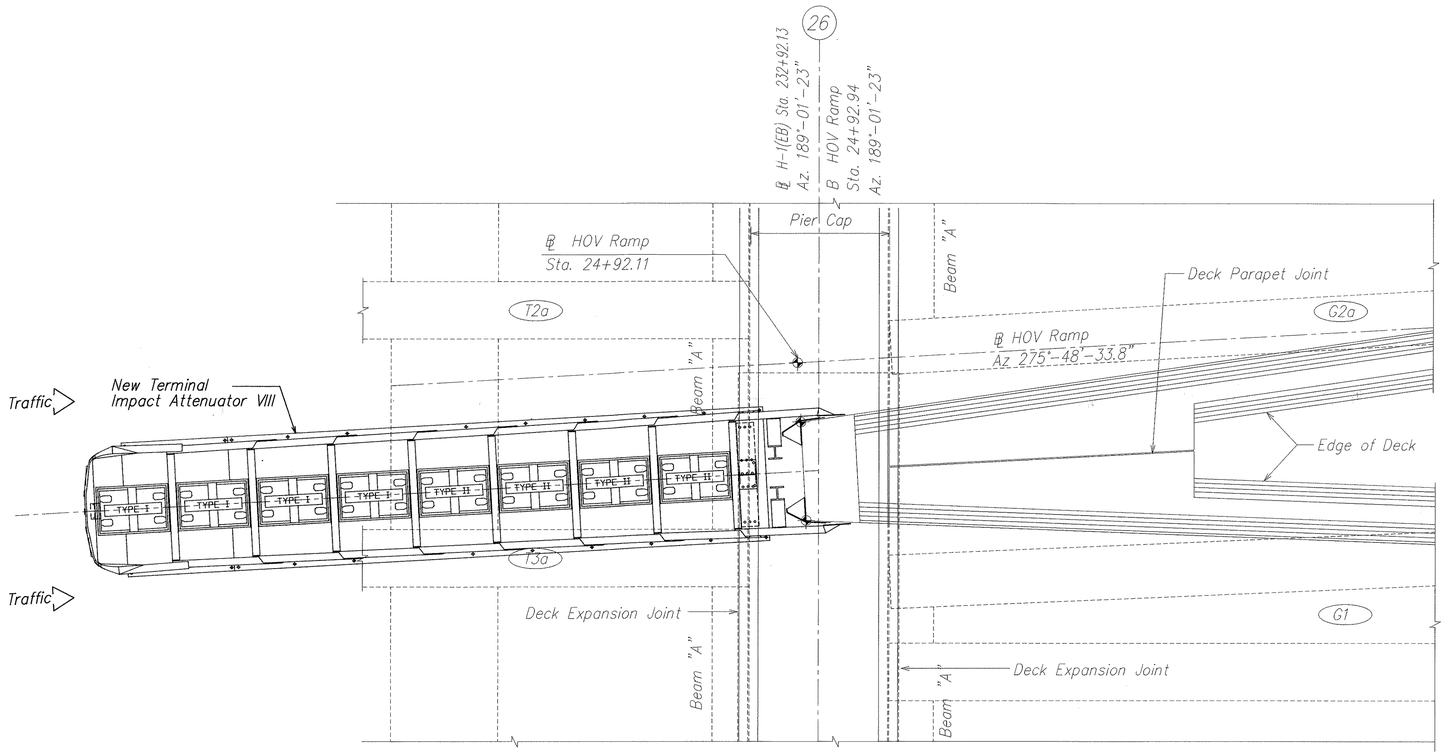

PLAN (A) S8.10 | S8.10

SCALE: 3/8"=1'-0"

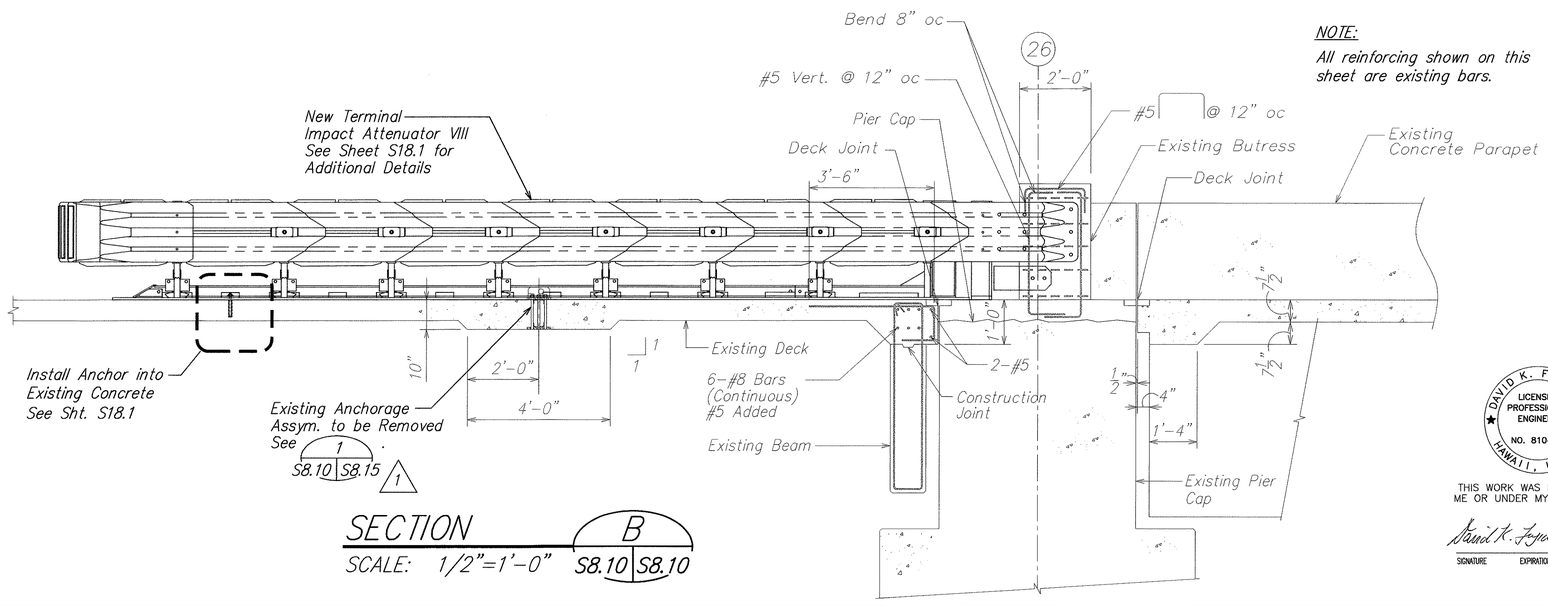

NOTE:
All reinforcing shown on this sheet are existing bars.

SECTION (B) S8.10 | S8.10

SCALE: 1/2"=1'-0"

ORIGINAL PLANS	SURVEY PLOTTED BY	DATE
	DRAWN BY	
	TRACED BY	
NOTE BOOK	DESIGNED BY	
	QUANTITIES BY	
No.	CHECKED BY	

DATE	REVISION
12/09/03	1 Revise Section Cut

DAVID K. FUJIWARA LICENSED PROFESSIONAL ENGINEER NO. 8104-S HAWAII, U.S.A.

THIS WORK WAS PREPARED BY ME OR UNDER MY SUPERVISION.

SIGNATURE — EXPIRATION DATE OF THE LICENSE 4-30-04

STATE OF HAWAII
DEPARTMENT OF TRANSPORTATION
HIGHWAYS DIVISION

SECTION
KEEHI INTERCHANGE
INTERSTATE ROUTE H-1
GUARDRAIL AND SHOULDER IMPROVEMENTS
Airport Interchange to Middle Street
Federal Aid Project No. IM-H1-1(240)

SCALE: As Noted — DATE: OCTOBER 2003

SHEET No. S8.10 OF 111 SHEETS

ADD. 62

FILE: *.DWG
PLOT: 1 = 1

\\Cad1\ksf\2000\0066-H1 GUARDRAIL\12-08-03 ADD1\ADD1 PCGS0810.dwg, 12/8/2003 9:16:23 AM, KSFinc.pc3, 1:1

FED. ROAD DIST. NO.	STATE	FED. AID PROJ. NO.	FISCAL YEAR	SHEET NO.	TOTAL SHEETS
HAWAII	HAW.	IM-H1-1(240)	2004	63	143

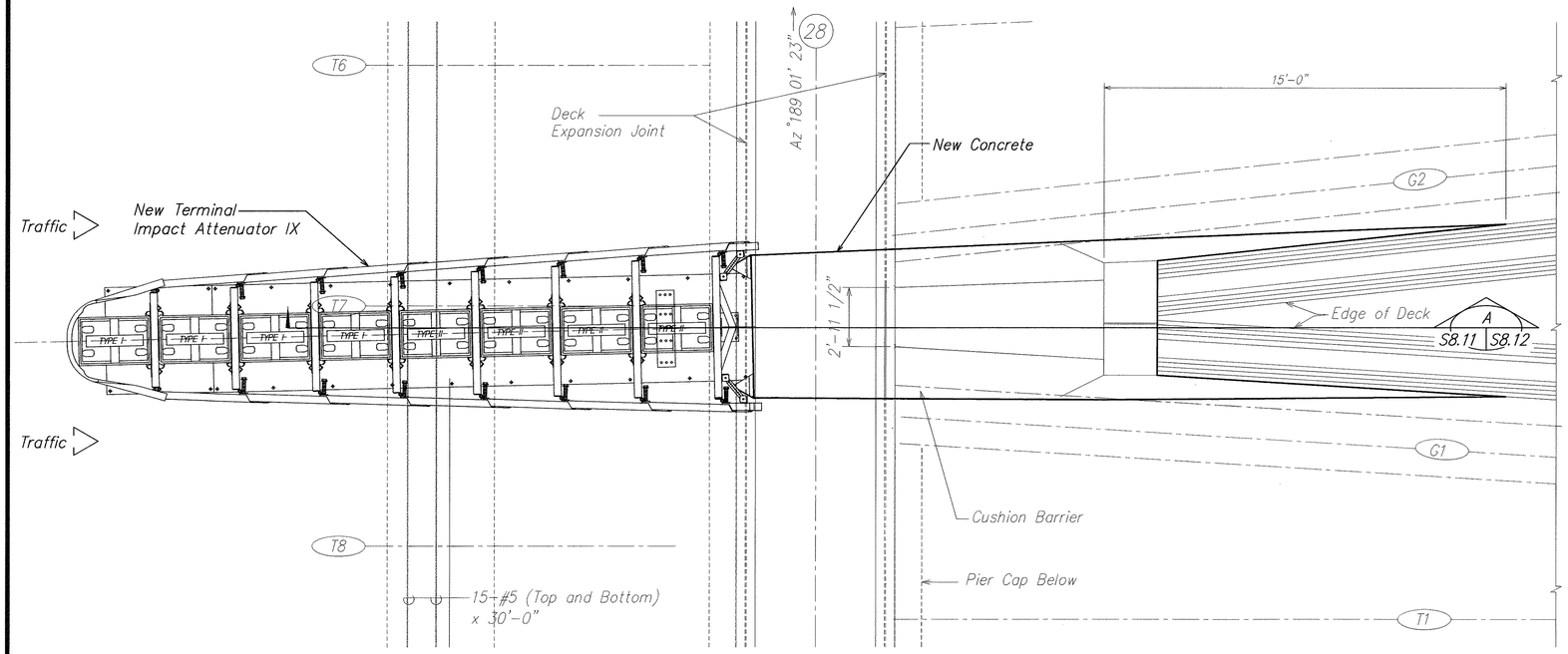

PLAN (A / S8.11 S8.11)

SCALE: 3/8"=1'-0"

NOTE:
All reinforcing shown on this sheet are existing bars.

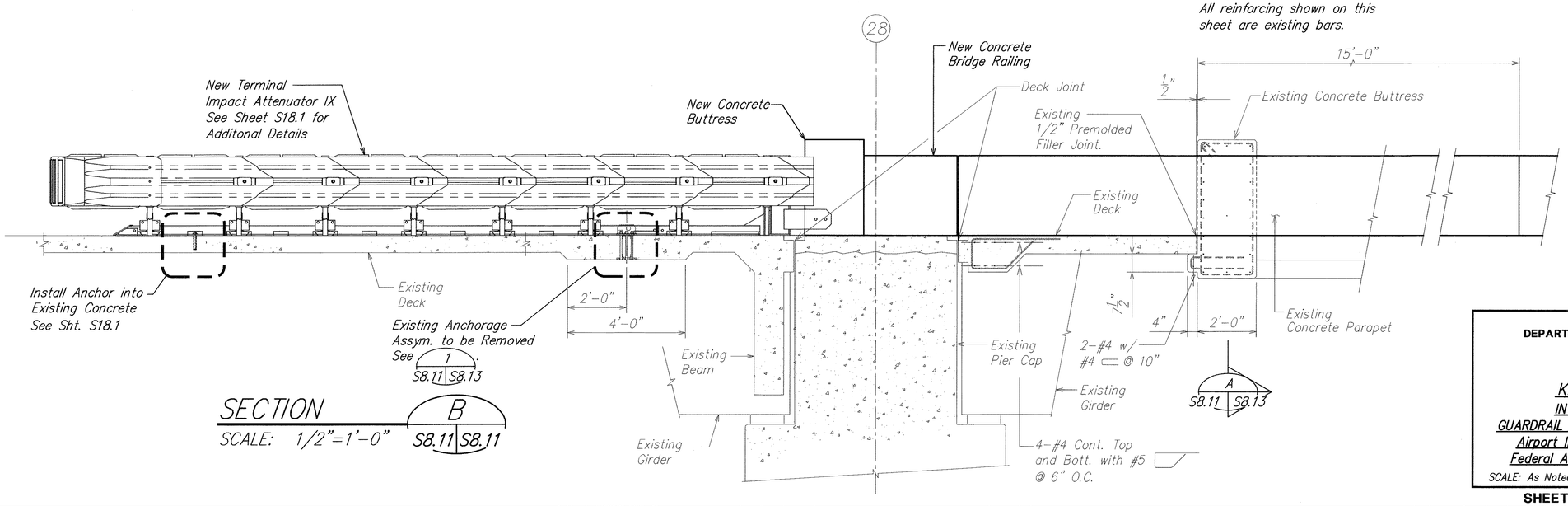

SECTION (B / S8.11 S8.11)

SCALE: 1/2"=1'-0"

DAVID K. FUJIWARA
LICENSED PROFESSIONAL ENGINEER
NO. 8104-S
HAWAII, U.S.A.

THIS WORK WAS PREPARED BY ME OR UNDER MY SUPERVISION.

SIGNATURE — EXPIRATION DATE OF THE LICENSE 4-30-04

STATE OF HAWAII
DEPARTMENT OF TRANSPORTATION
HIGHWAYS DIVISION

SECTIONS
KEEHI INTERCHANGE
INTERSTATE ROUTE H-1
GUARDRAIL AND SHOULDER IMPROVEMENTS
Airport Interchange to Middle Street
Federal Aid Project No. IM-H1-1(240)

SCALE: As Noted — DATE: OCTOBER 2003

SHEET No. S8.11 OF 111 SHEETS

ORIGINAL PLAN	SURVEY PLOTTED BY	DATE
	DRAWN BY	
NOTE BOOK	TRACED BY	
	DESIGNED BY	
No.	QUANTITIES BY	
	CHECKED BY	

FILE: PCGS812.DWG
PLOT: 1 = 1

C:\KSF\GUARDRAIL\10-24-03\PCGS0811.dwg, 10/23/2003 4:29:38 PM, KSFinc.pc3, 1:1

FED. ROAD DIST. NO.	STATE	FED. AID PROJ. NO.	FISCAL YEAR	SHEET NO.	TOTAL SHEETS
HAWAII	HAW.	IM-H1-1(240)	2004	64	143

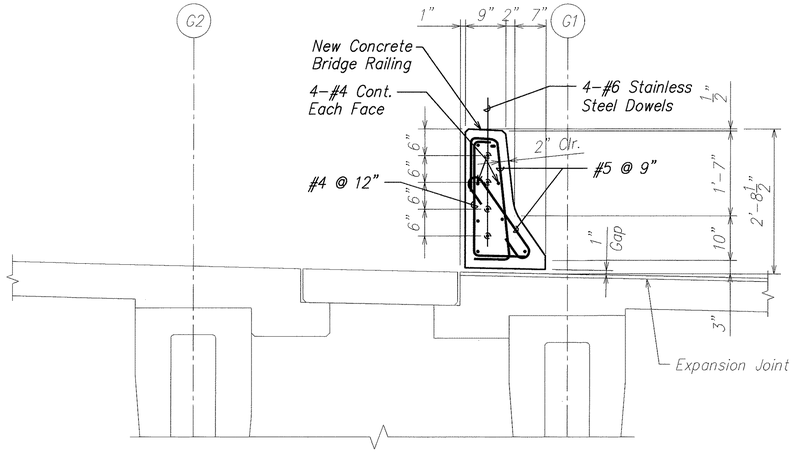

SECTION OVER EXPANSION JOINT (B)
SCALE: 3/4" = 1'-0"
S8.9 | S8.12

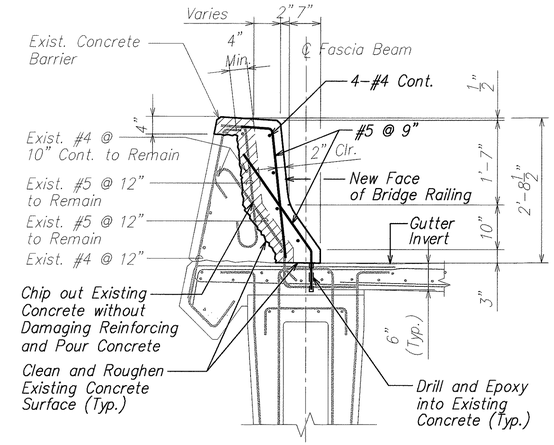

SECTION (C)
SCALE: 3/4" = 1'-0"
S8.9 | S8.12

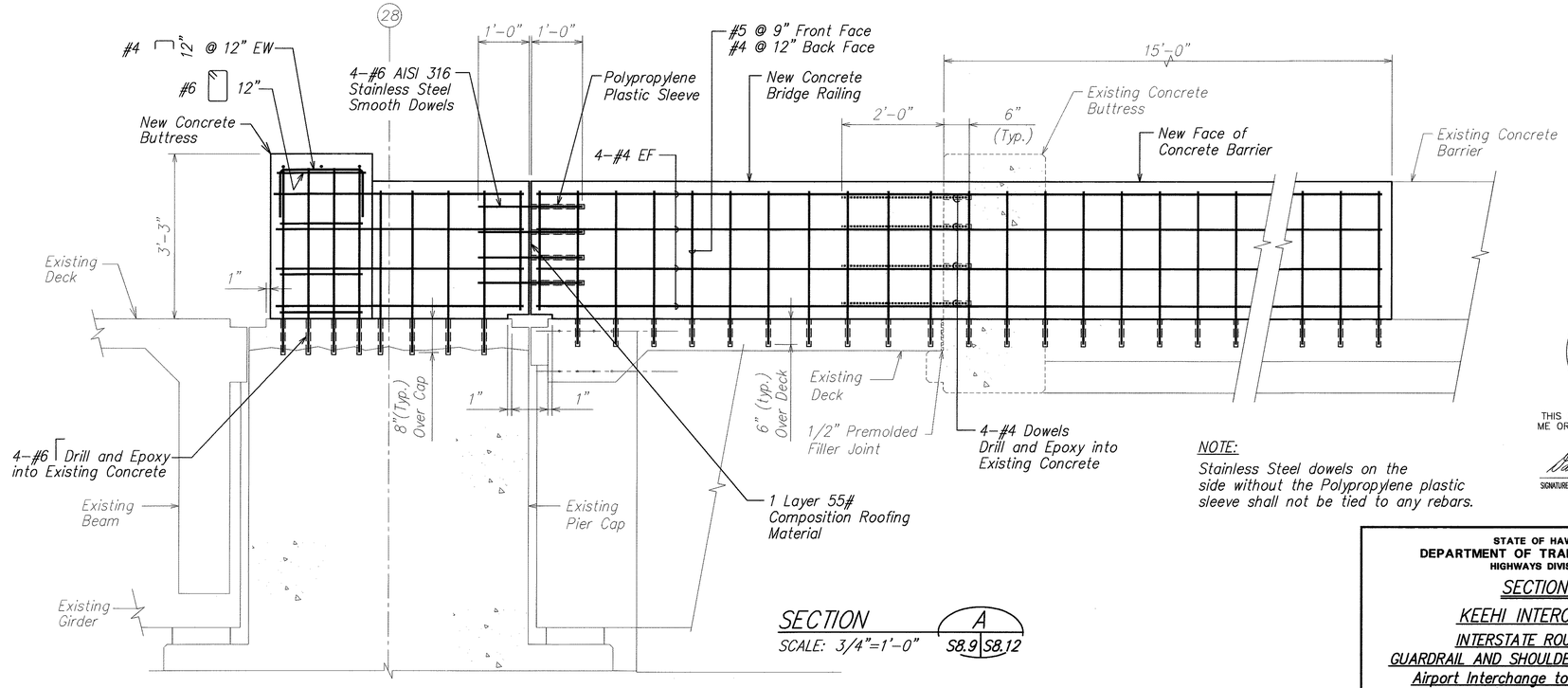

SECTION (A)
SCALE: 3/4"=1'-0"
S8.9 | S8.12

NOTE:
Stainless Steel dowels on the side without the Polypropylene plastic sleeve shall not be tied to any rebars.

DAVID K. FUJIWARA
LICENSED PROFESSIONAL ENGINEER
NO. 8104-S
HAWAII, U.S.A.

THIS WORK WAS PREPARED BY ME OR UNDER MY SUPERVISION.

SIGNATURE — EXPIRATION DATE OF THE LICENSE 4-30-04

STATE OF HAWAII
DEPARTMENT OF TRANSPORTATION
HIGHWAYS DIVISION

SECTIONS

KEEHI INTERCHANGE
INTERSTATE ROUTE H-1
GUARDRAIL AND SHOULDER IMPROVEMENTS
Airport Interchange to Middle Street
Federal Aid Project No. IM-H1-1(240)

SCALE: As Noted — DATE: OCTOBER 2003

SHEET No. S8.12 OF 111 SHEETS

64

ORIGINAL PLAN — SURVEY PLOTTED BY — DRAWN BY — TRACED BY — DESIGNED BY — QUANTITIES BY — CHECKED BY — DATE
NOTE BOOK No.

FILE: PCC-S814.DWG
PLOT: 1 = 1

C:\KSF\GUARDRAIL\10-24-03\PCGS0812.dwg, 10/23/2003 4:32:12 PM, KSFinc.pc3, 1:1

FED. ROAD DIST. NO.	STATE	FED. AID PROJ. NO.	FISCAL YEAR	SHEET NO.	TOTAL SHEETS
HAWAII	HAW.	IM-H1-1(240)	2004	65	143

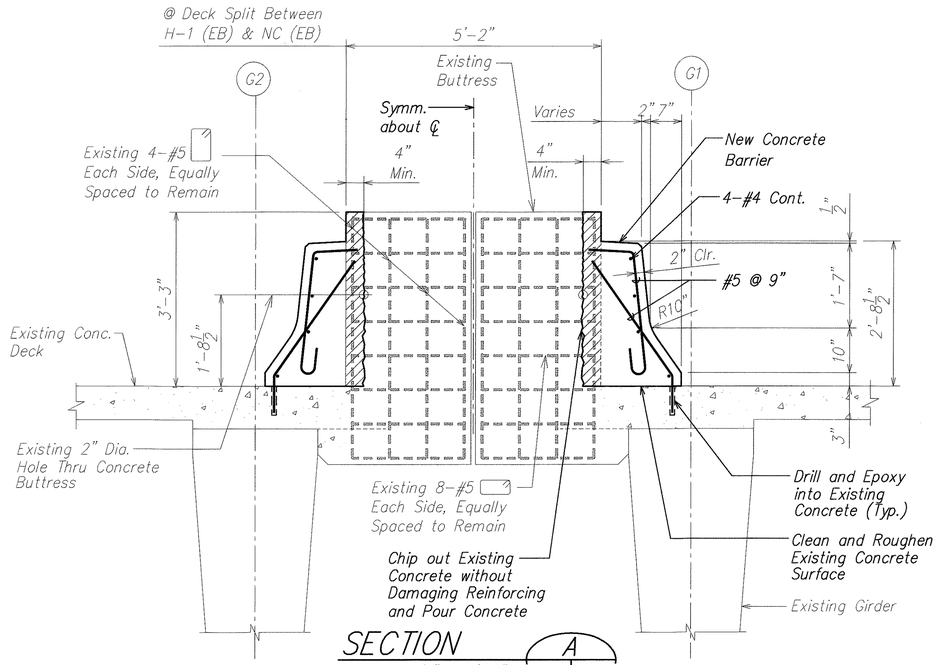

SECTION A
SCALE: 3/4" = 1'-0" S8.9 S8.13

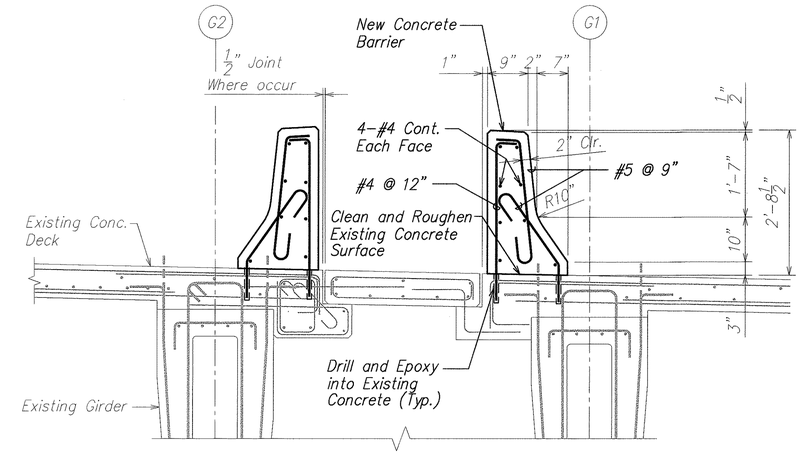

SECTION B
SCALE: 3/4" = 1'-0" S8.9 S8.13

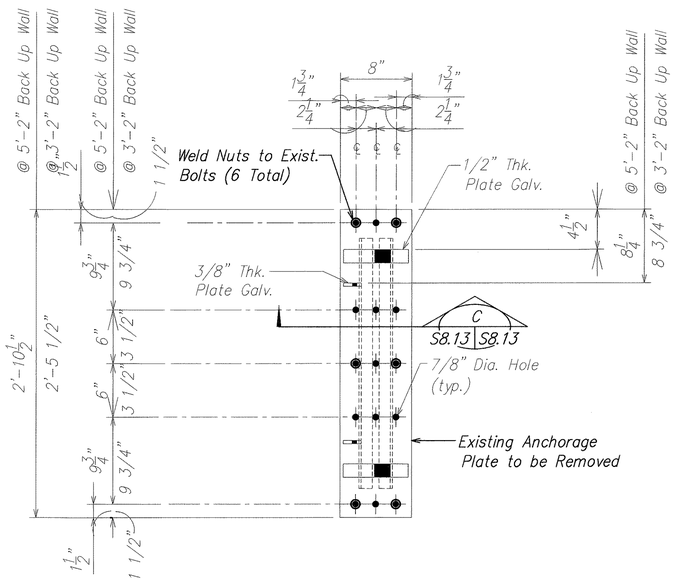

EXISTING ANCHORAGE ASSYM. SECTION
SCALE: 1 1/2"=1'-0"

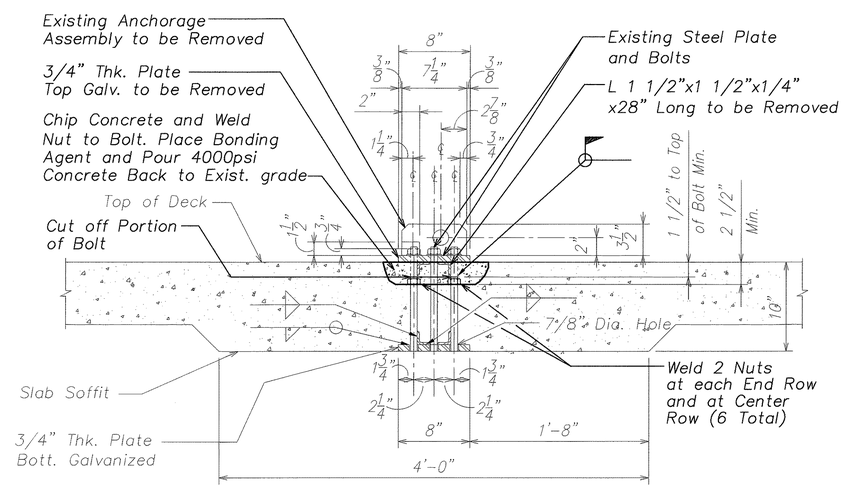

SECTION C
SCALE: 1 1/2"=1'-0" S8.10 S8.13

ANCHORAGE PLATE DETAIL 1
SCALE: 1 1/2" = 1'-0" S8.10 S8.13

DAVID K. FUJIWARA LICENSED PROFESSIONAL ENGINEER NO. 8104-S HAWAII, U.S.A.

THIS WORK WAS PREPARED BY ME OR UNDER MY SUPERVISION.

SIGNATURE — EXPIRATION DATE OF THE LICENSE 4-30-04

STATE OF HAWAII
DEPARTMENT OF TRANSPORTATION
HIGHWAYS DIVISION

SECTIONS

KEEHI INTERCHANGE
INTERSTATE ROUTE H-1
GUARDRAIL AND SHOULDER IMPROVEMENTS
Airport Interchange to Middle Street
Federal Aid Project No. IM-H1-1(240)

SCALE: As Noted — DATE: OCTOBER 2003

SHEET No. S8.13 OF 111 SHEETS

ORIGINAL PLAN | NOTE BOOK No. | SURVEY PLOTTED BY | DRAWN BY | TRACED BY | DESIGNED BY | QUANTITIES BY | CHECKED BY | DATE

FILE: PCCS8815.DWG
PLOT: 1 = 1

C:\KSF\GUARDRAIL\10-24-03\PCCS0812.dwg, 10/23/2003 4:33:09 PM, KSFinc.pc3, 1:1

FED. ROAD DIST. NO.	STATE	FED. AID PROJ. NO.	FISCAL YEAR	SHEET NO.	TOTAL SHEETS
HAWAII	HAW.	IM-H1-1(240)	2004	66	143

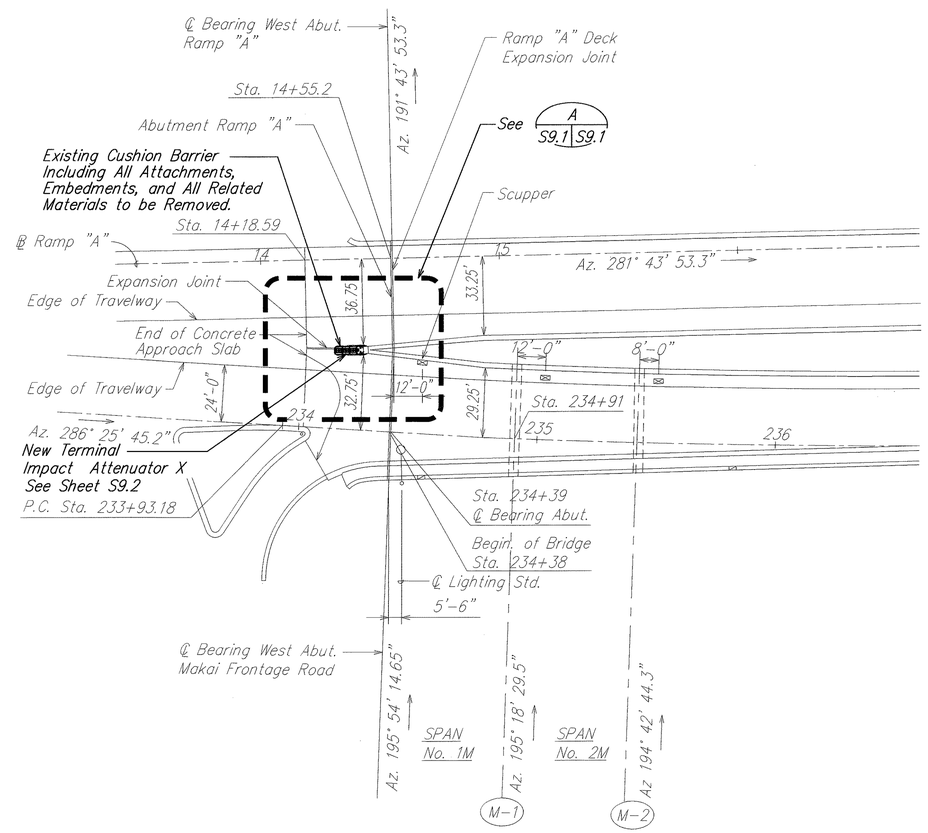

PARTIAL MAKAI FRONTAGE ROAD PLAN – RAMP "A" BETWEEN WEST ABUTMENT AND GRID M-2

SCALE: 1" = 30'-0"

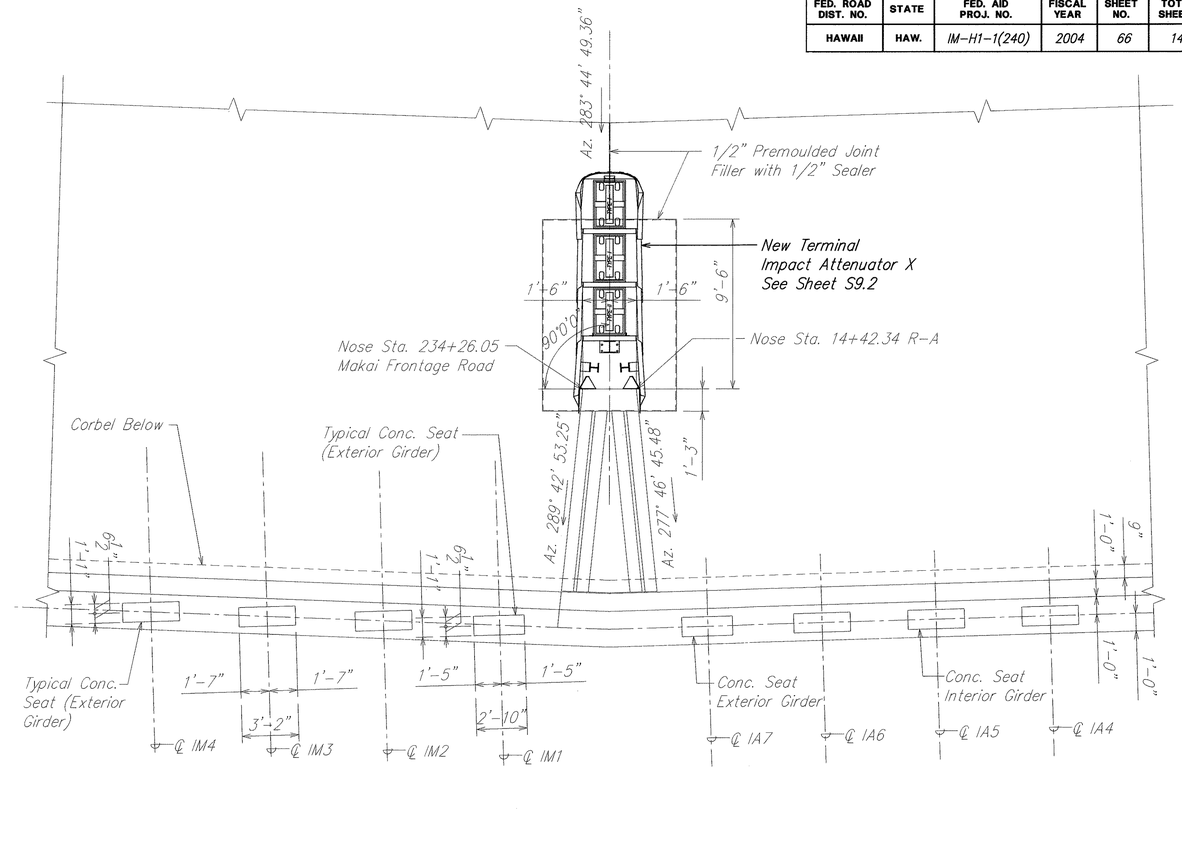

PLAN – WEST ABUTMENT – MAKAI FRONTAGE ROAD, RAMP "A"

SCALE: 1/4" = 1'-0"

A S9.1 S9.1

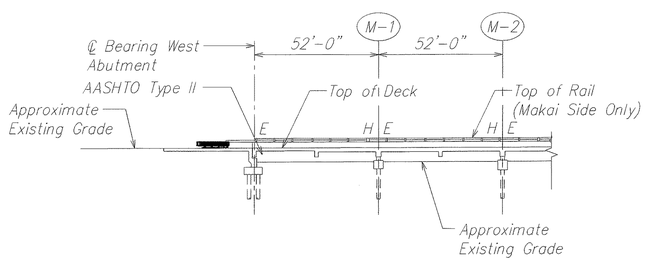

PARTIAL LONGITUDINAL SECTION ℄ MAKAI FRONTAGE ROAD

SCALE: 1" = 30'-0"

ORIGINAL PLAN	SURVEY PLOTTED BY	DATE
	DRAWN BY	
NOTE BOOK	TRACED BY	
	DESIGNED BY	
	QUANTITIES BY	
No.	CHECKED BY	

DAVID K. FUJIWARA LICENSED PROFESSIONAL ENGINEER NO. 8104-S HAWAII, U.S.A.

THIS WORK WAS PREPARED BY ME OR UNDER MY SUPERVISION.

SIGNATURE — EXPIRATION DATE OF THE LICENSE 4-30-04

STATE OF HAWAII
DEPARTMENT OF TRANSPORTATION
HIGHWAYS DIVISION

PARTIAL ROADWAY PLANS
MAKAI FRONTAGE ROAD
INTERSTATE ROUTE H-1
GUARDRAIL AND SHOULDER IMPROVEMENTS
Airport Interchange to Middle Street
Federal Aid Project No. IM-H1-1(240)

SCALE: As Noted — DATE: OCTOBER 2003

SHEET No. S9.1 OF 111 SHEETS

FILE: P01S91.DWG
PLOT: 1 = 1

\\Cad1\vsf\2000\0066-H1 GUARDRAIL\11-05-03\FCGS0901.dwg, 11/4/2003 3:34:49 PM, KSFrnc.pc3, 1:1

FED. ROAD DIST. NO.	STATE	FED. AID PROJ. NO.	FISCAL YEAR	SHEET NO.	TOTAL SHEETS
HAWAII	HAW.	IM-H1-1(240)	2004	67	143

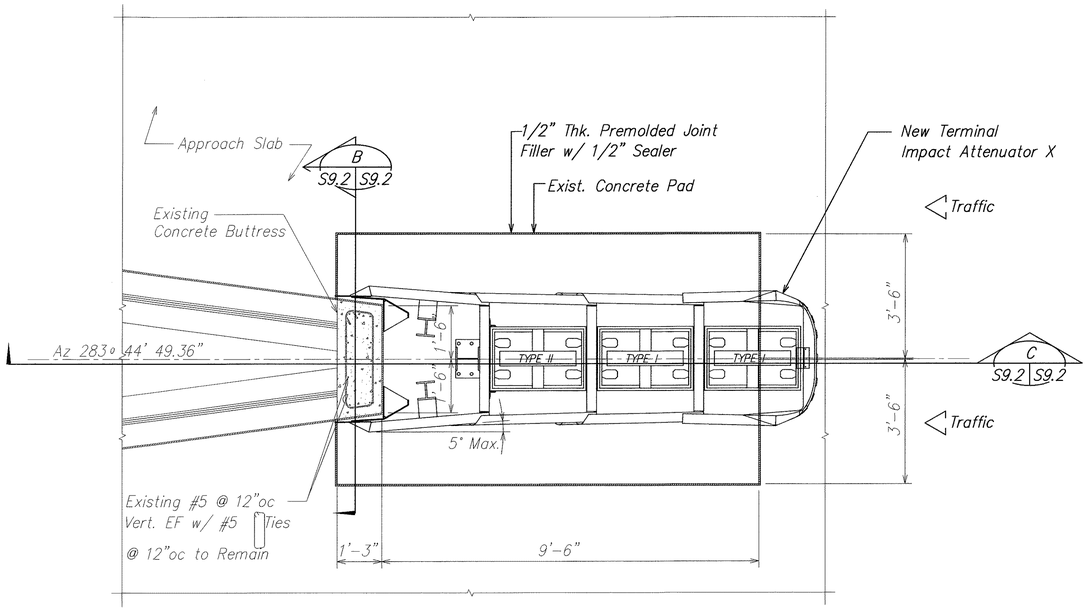

PLAN – CONCRETE PAD FOR CUSHION BARRIER (A / S9.2 S9.2)

SCALE: 1/2" = 1'-0"

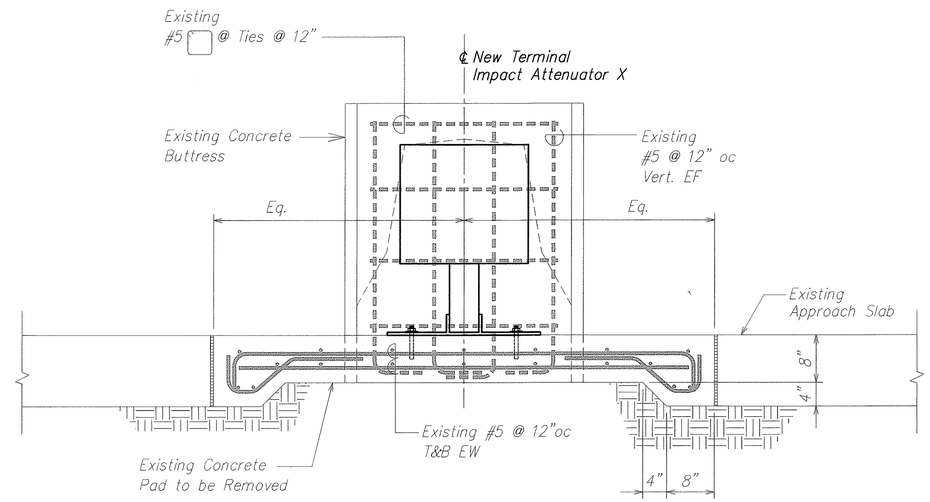

SECTION OF EXISTING CONCRETE BUTTRESS AND CONCRETE PAD (B / S9.2 S9.2)

SCALE: 1" = 1'-0"

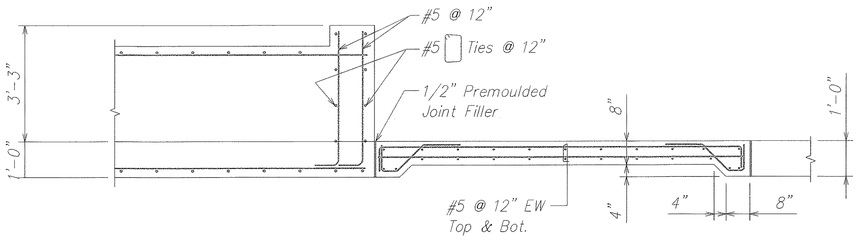

SECTION (C / S9.2 S9.2)

SCALE: 1/2" = 1'-0"

ORIGINAL PLAN	SURVEY PLOTTED BY	DATE
	DRAWN BY	
NOTE BOOK	TRACED BY	
	DESIGNED BY	
	QUANTITIES BY	
No.	CHECKED BY	

DAVID K. FUJIWARA LICENSED PROFESSIONAL ENGINEER NO. 8104-S HAWAII, U.S.A.

THIS WORK WAS PREPARED BY ME OR UNDER MY SUPERVISION.

SIGNATURE — EXPIRATION DATE OF THE LICENSE 4-30-04

STATE OF HAWAII
DEPARTMENT OF TRANSPORTATION
HIGHWAYS DIVISION

PLAN AND SECTIONS
MAKAI FRONTAGE ROAD
INTERSTATE ROUTE H-1
GUARDRAIL AND SHOULDER IMPROVEMENTS
Airport Interchange to Middle Street
Federal Aid Project No. IM-H1-1(240)

SCALE: As Noted — DATE: OCTOBER 2003

SHEET No. S9.2 OF 111 SHEETS

FILE: P01S92.DWG
PLOT: 1 = 1

\\Cad1\ksf\2000\0066-H1 GUARDRAIL\11-05-03\PCGS0902.dwg, 11/4/2003 3:35:40 PM, KSFinc.pc3, 1:1

FED. ROAD DIST. NO.	STATE	FED. AID PROJ. NO.	FISCAL YEAR	SHEET NO.	TOTAL SHEETS
HAWAII	HAW.	IM-H1-1(240)	2004	68	143

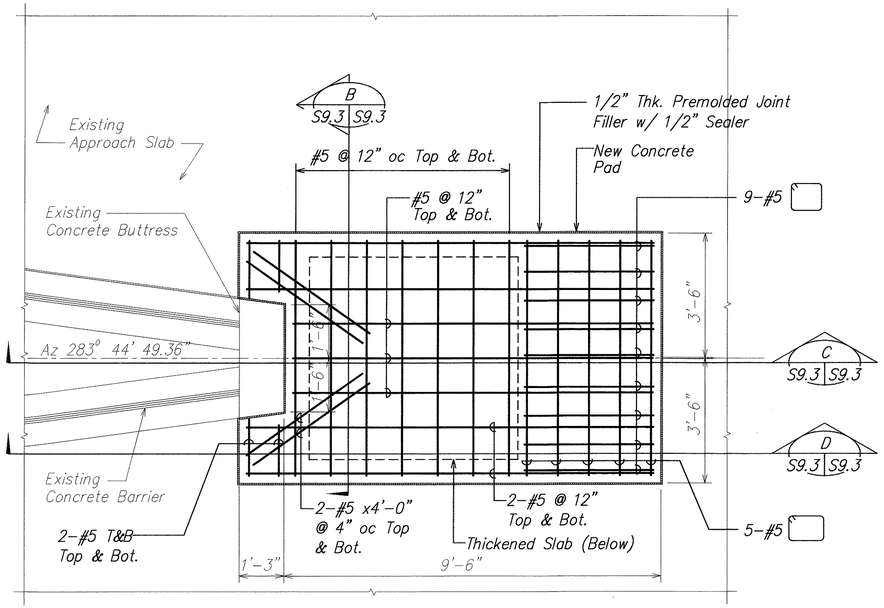

NEW CONCRETE PAD DETAIL (OPTIONAL) A S9.3 S9.3

SCALE: 1/2" = 1'-0"

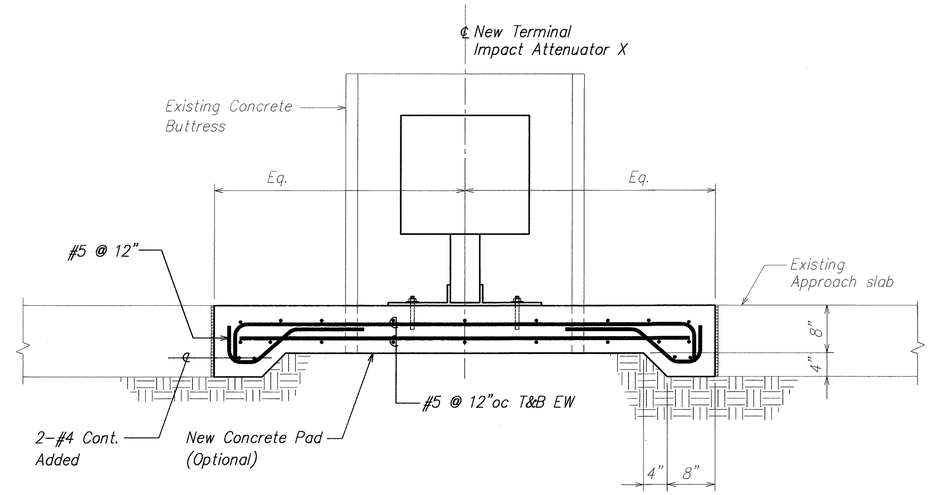

SECTION B S9.3 S9.3

SCALE: 1" = 1'-0"

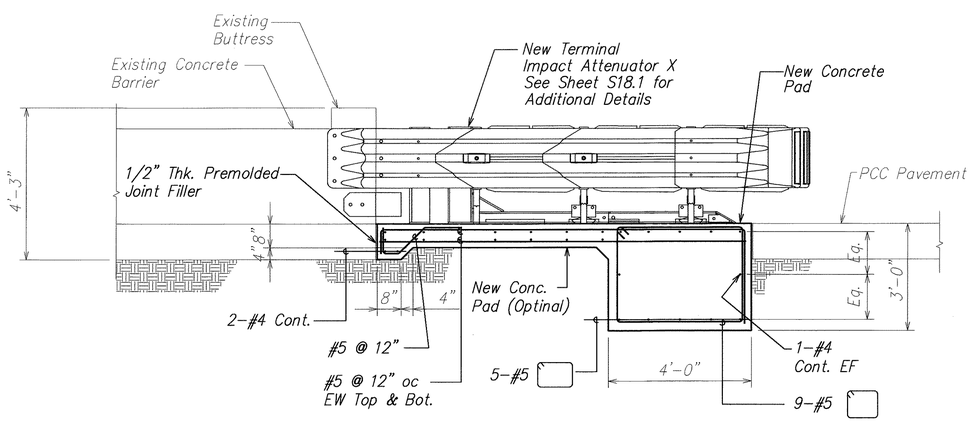

SECTION C S9.3 S9.3

SCALE: 1/2" = 1'-0"

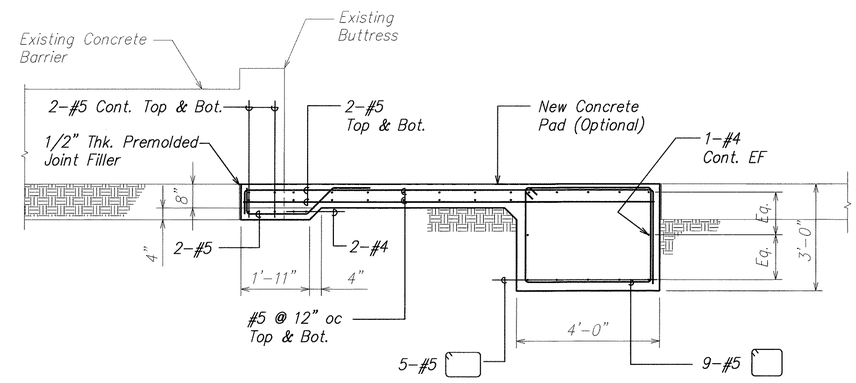

SECTION D S9.3 S9.3

SCALE: 1/2" = 1'-0"

DAVID K. FUJIWARA LICENSED PROFESSIONAL ENGINEER NO. 8104-S HAWAII, U.S.A.

THIS WORK WAS PREPARED BY ME OR UNDER MY SUPERVISION.

SIGNATURE — EXPIRATION DATE OF THE LICENSE 4-30-04

STATE OF HAWAII
DEPARTMENT OF TRANSPORTATION
HIGHWAYS DIVISION

SECTIONS
MAKAI FRONTAGE ROAD
INTERSTATE ROUTE H-1
GUARDRAIL AND SHOULDER IMPROVEMENTS
Airport Interchange to Middle Street
Federal Aid Project No. IM-H1-1(240)

SCALE: As Noted — DATE: OCTOBER 2003

SHEET No. S9.3 OF 111 SHEETS

ORIGINAL PLAN | NOTE BOOK No. | SURVEY PLOTTED BY | DRAWN BY | TRACED BY | DESIGNED BY | QUANTITIES BY | CHECKED BY | DATE

FILE: P01594.DWG
PLOT: 1 = 1

\\Ccad1\xsf\2000\0066-H1 GUARDRAIL\11-05-03\PCCS0902.dwg, 11/4/2003 3:36:01 PM, KSFinc.pc3, 1:1

FED. ROAD DIST. NO.	STATE	FED. AID PROJ. NO.	FISCAL YEAR	SHEET NO.	TOTAL SHEETS
HAWAII	HAW.	IM-H1-1(240)	2004	69	143

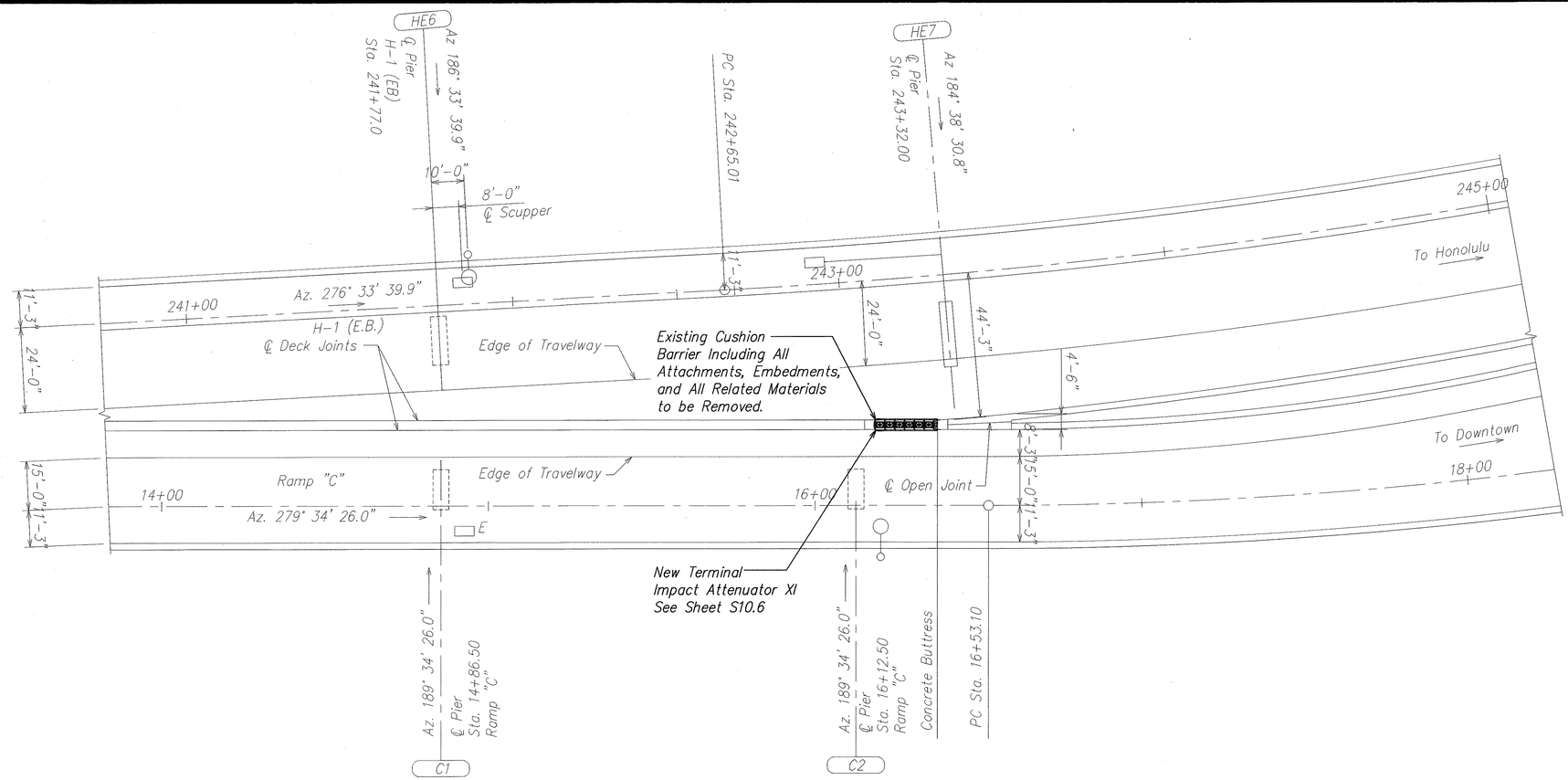

N

GENERAL PLAN
PLAN – INT. ROUTE H-1 (EB) & RAMP "C"

SCALE: 1" = 20'-0"

ORIGINAL PLAN	SURVEY PLOTTED BY	DATE
	DRAWN BY	
	TRACED BY	
NOTE BOOK	DESIGNED BY	
	QUANTITIES BY	
No.	CHECKED BY	

DAVID K. FUJIWARA
LICENSED PROFESSIONAL ENGINEER
NO. 8104-S
HAWAII, U.S.A.

THIS WORK WAS PREPARED BY ME OR UNDER MY SUPERVISION.

David K. Fujiwara 4-30-04

SIGNATURE EXPIRATION DATE OF THE LICENSE

STATE OF HAWAII
DEPARTMENT OF TRANSPORTATION
HIGHWAYS DIVISION

GENERAL PLAN
KEEHI INTERCHANGE
INTERSTATE ROUTE H-1
GUARDRAIL AND SHOULDER IMPROVEMENTS
Airport Interchange to Middle Street
Federal Aid Project No. IM-H1-1(240)

SCALE: As Noted DATE: OCTOBER 2003

SHEET No. S10.1 OF 111 SHEETS

FILE: PCGS101.DWG
PLOT: 1 = 1

C:\KSF\GUARDRAIL\10-24-03\PCGS1001.dwg, 10/24/2003 9:29:43 AM, KSFinc.pc3, 1:1

FED. ROAD DIST. NO.	STATE	FED. AID PROJ. NO.	FISCAL YEAR	SHEET NO.	TOTAL SHEETS
HAWAII	HAW.	IM-H1-1(240)	2004	70	143

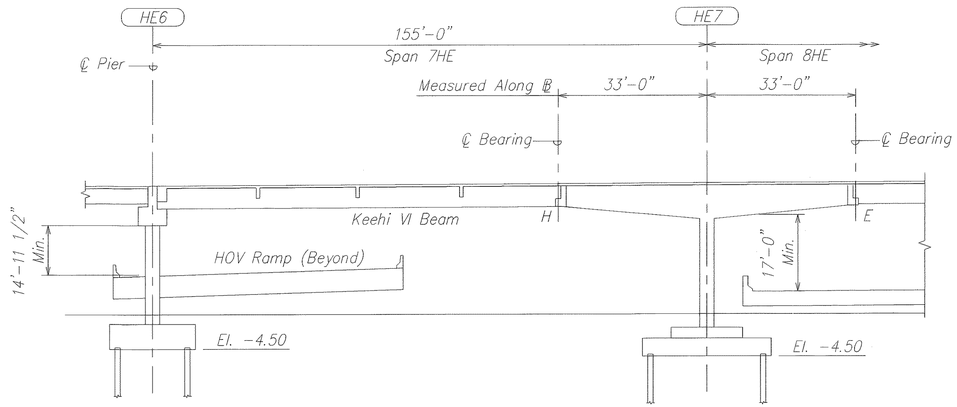

LONGITUDINAL SECTION – INT. ROUTE H-1 (EB)

SCALE: 1" = 20'-0"

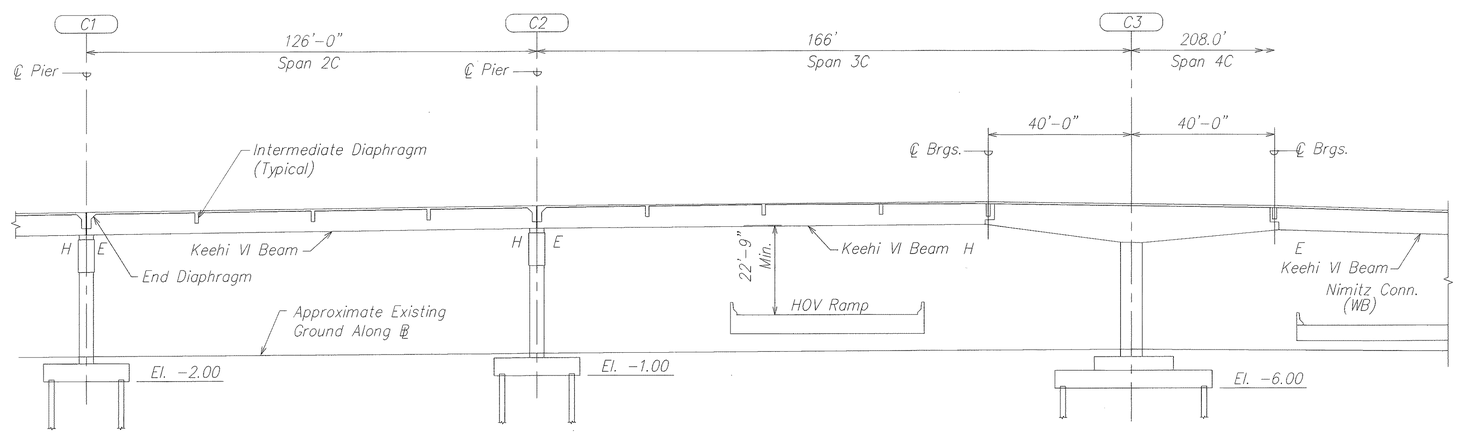

LONGITUDINAL SECTION – NIMITZ CONNECTOR (WB)

SCALE: 1" = 20'-0"

ORIGINAL PLAN	SURVEY PLOTTED BY	DATE
	DRAWN BY	
	TRACED BY	
NOTE BOOK	DESIGNED BY	
	QUANTITIES BY	
No.	CHECKED BY	

DAVID K. FUJIWARA
LICENSED PROFESSIONAL ENGINEER
NO. 8104-S
HAWAII, U.S.A.

THIS WORK WAS PREPARED BY ME OR UNDER MY SUPERVISION.

SIGNATURE — EXPIRATION DATE OF THE LICENSE 4-30-04

STATE OF HAWAII
DEPARTMENT OF TRANSPORTATION
HIGHWAYS DIVISION

LONGITUDINAL SECTIONS
KEEHI INTERCHANGE
INTERSTATE ROUTE H-1
GUARDRAIL AND SHOULDER IMPROVEMENTS
Airport Interchange to Middle Street
Federal Aid Project No. IM-H1-1(240)

SCALE: As Noted — DATE: OCTOBER 2003

SHEET No. S10.2 OF 111 SHEETS

FILE: PCGS101.DWG
PLOT: 1 = 1

C:\KSF\GUARDRAIL\10-24-03\PCGS1001.dwg, 10/24/2003 9:30:02 AM, KSFinc.pc3, 1:1

FED. ROAD DIST. NO.	STATE	FED. AID PROJ. NO.	FISCAL YEAR	SHEET NO.	TOTAL SHEETS
HAWAII	HAW.	IM-H1-1(240)	2004	71	143

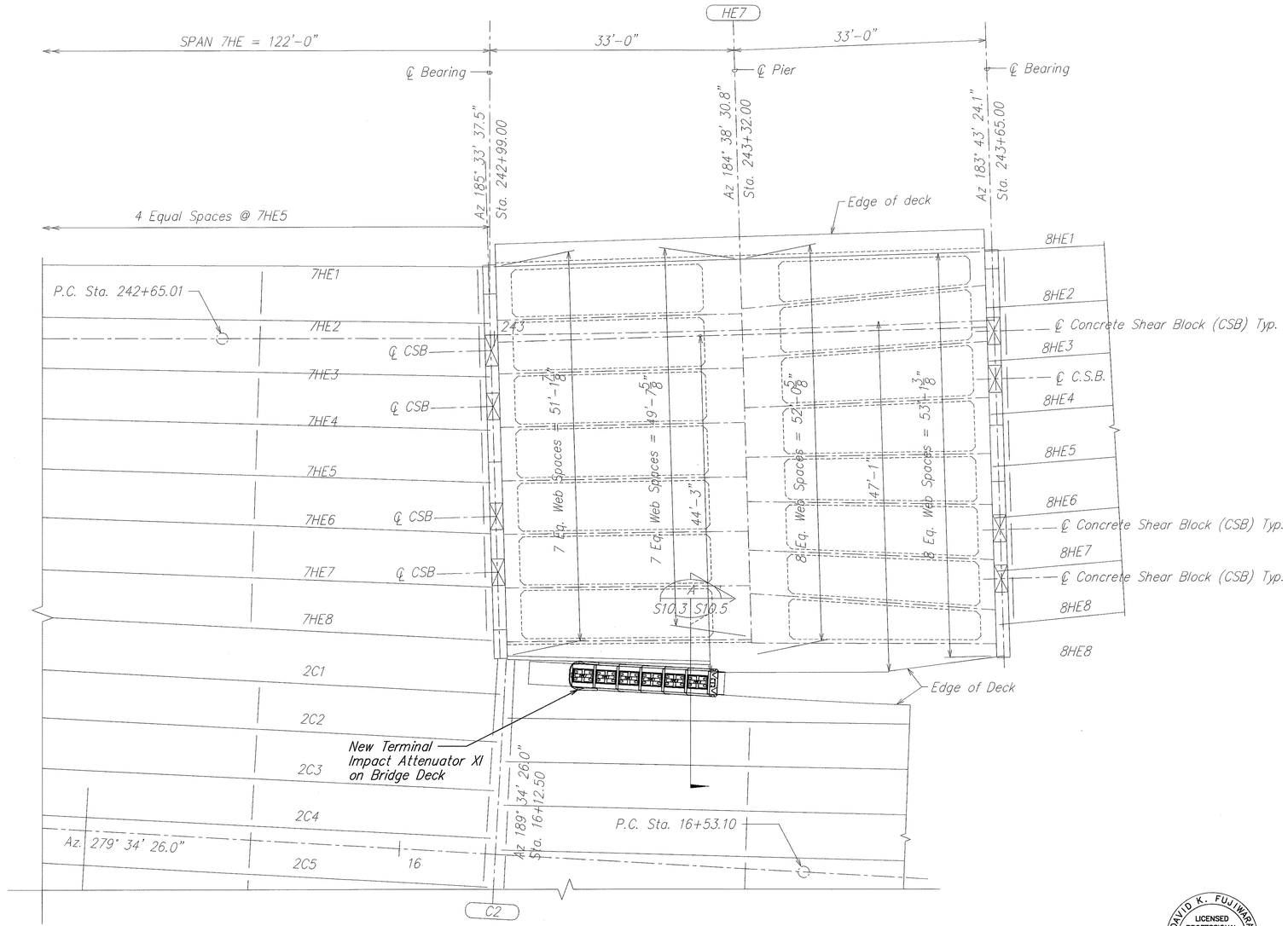

N

EXISTING PARTIAL FRAMING PLAN
INTERSTATE ROUTE H-1 (EB)

SCALE: 1/8" = 1'-0"

ORIGINAL PLAN	SURVEY PLOTTED BY	DATE
	DRAWN BY	
NOTE BOOK	TRACED BY	
	DESIGNED BY	
No.	QUANTITIES BY	
	CHECKED BY	

DAVID K. FUJIWARA
LICENSED PROFESSIONAL ENGINEER
NO. 8104-S
HAWAII, U.S.A.

THIS WORK WAS PREPARED BY ME OR UNDER MY SUPERVISION.

SIGNATURE — EXPIRATION DATE OF THE LICENSE 4-30-04

STATE OF HAWAII
DEPARTMENT OF TRANSPORTATION
HIGHWAYS DIVISION

DECK PLAN
KEEHI INTERCHANGE
INTERSTATE ROUTE H-1
GUARDRAIL AND SHOULDER IMPROVEMENTS
Airport Interchange to Middle Street
Federal Aid Project No. IM-H1-1(240)

SCALE: As Noted — DATE: OCTOBER 2003

SHEET No. S10.3 OF 111 SHEETS

FILE: PCGS103.DWG
PLOT: 1 = 1

C:\KSF\GUARDRAIL\10-24-03\PCGS1003.dwg, 10/24/2003 9:30:53 AM, KSFinc.pc3, 1:1

FED. ROAD DIST. NO.	STATE	FED. AID PROJ. NO.	FISCAL YEAR	SHEET NO.	TOTAL SHEETS
HAWAII	HAW.	IM-H1-1(240)	2004	72	143

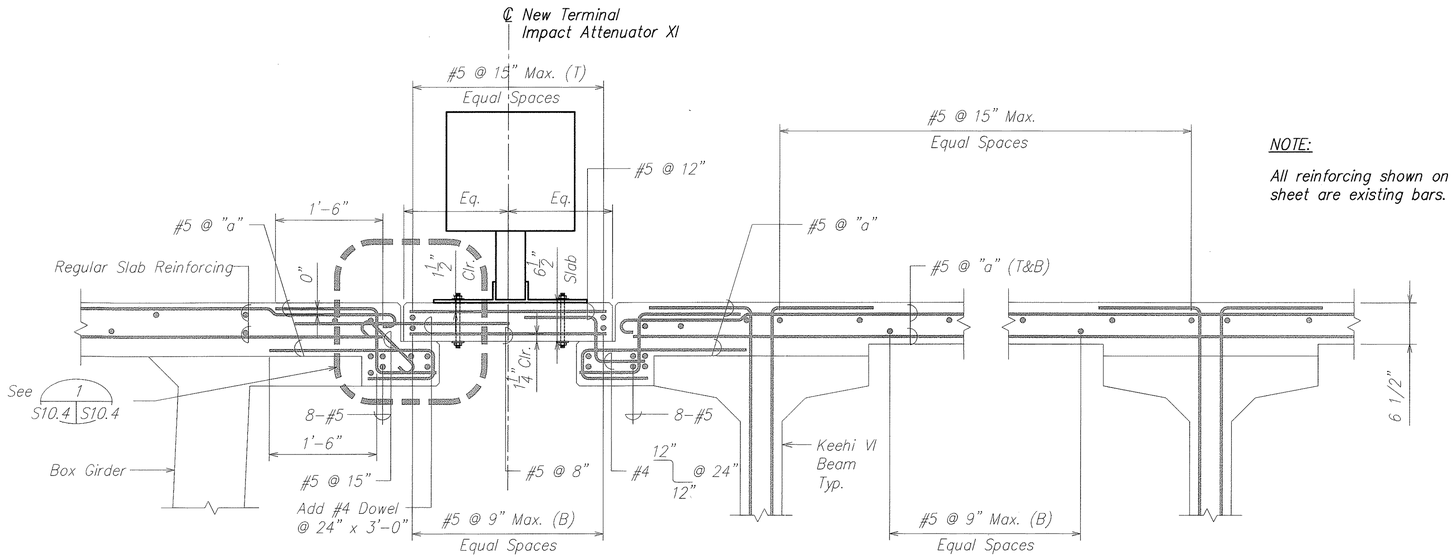

NOTE:

All reinforcing shown on this sheet are existing bars.

EXISTING DECK SECTION (A / S10.4 S10.4)

SCALE: 1" = 1'-0"

Table "A"	
Spacing Reinforcing Bars in Slab	
Spacing "a"	Span
7 1/2"	7HE
8"	2C, 3C, and 8HE

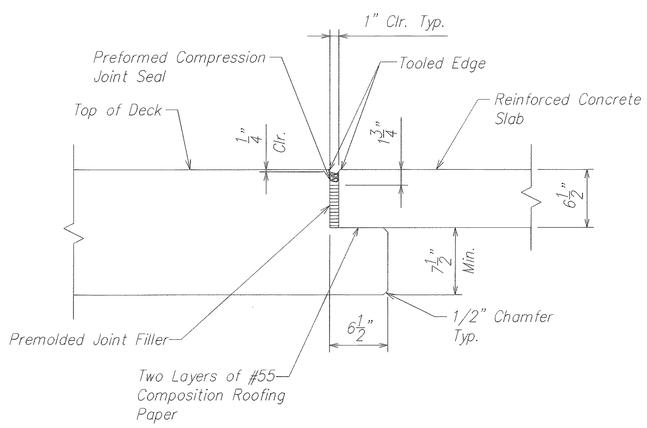

EXISTING SLAB DETAIL (1 / S10.4 S10.4)

SCALE: 1 1/2" = 1'-0"

ORIGINAL PLAN	SURVEY PLOTTED BY	DATE
	DRAWN BY	"
	TRACED BY	"
NOTE BOOK	DESIGNED BY	"
	QUANTITIES BY	"
No.	CHECKED BY	"

DAVID K. FUJIWARA
LICENSED PROFESSIONAL ENGINEER
NO. 8104-S
HAWAII, U.S.A.

THIS WORK WAS PREPARED BY ME OR UNDER MY SUPERVISION.

SIGNATURE — EXPIRATION DATE OF THE LICENSE 4-30-04

STATE OF HAWAII
DEPARTMENT OF TRANSPORTATION
HIGHWAYS DIVISION

SECTIONS & DETAILS
KEEHI INTERCHANGE
INTERSTATE ROUTE H-1
GUARDRAIL AND SHOULDER IMPROVEMENTS
Airport Interchange to Middle Street
Federal Aid Project No. IM-H1-1(240)

SCALE: As Noted — DATE: OCTOBER 2003

SHEET No. S10.4 OF 111 SHEETS

FILE: PCCS104.DWG
PLOT: 1 = 1

C:\KSF\GUARDRAIL\10-24-03\PCCS1004.dwg, 10/24/2003 3:44:39 PM, KSFinc.pc3, 1:1

FED. ROAD DIST. NO.	STATE	FED. AID PROJ. NO.	FISCAL YEAR	SHEET NO.	TOTAL SHEETS
HAWAII	HAW.	IM-H1-1(240)	2004	73	143

NOTE:
All reinforcing shown on this sheet are existing bars.

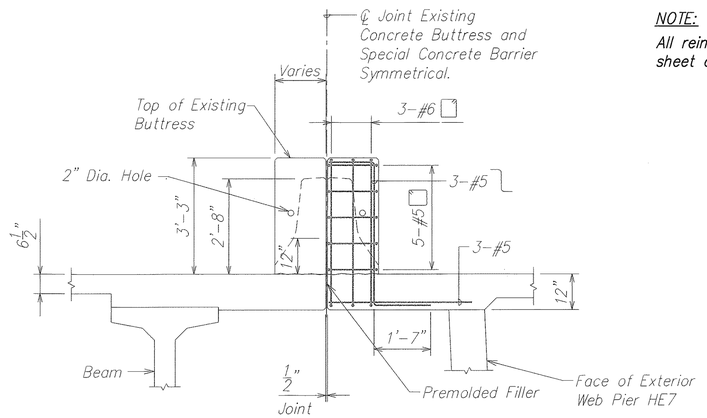

SECTION A
SCALE: 1/2" = 1'-0" S10.6 S10.5

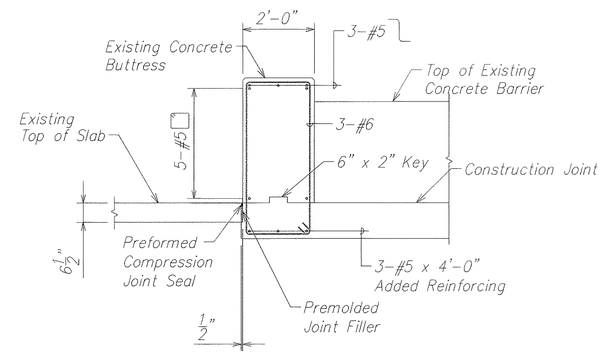

SECTION B
SCALE: 1/2" = 1'-0" S10.6 S10.5

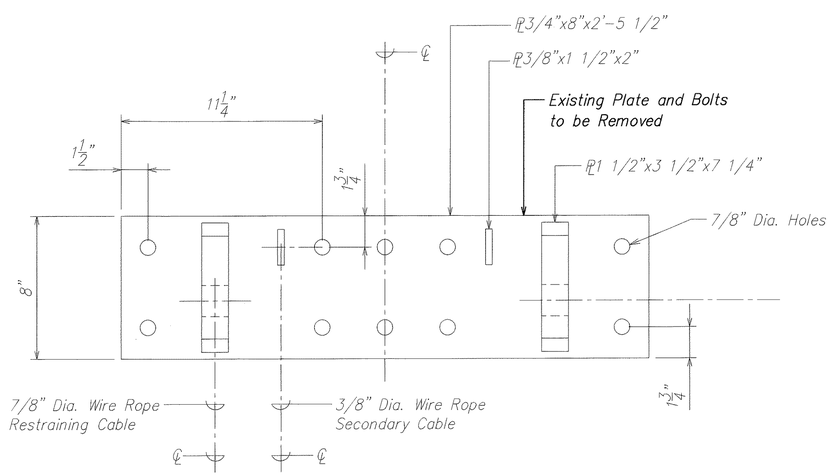

DECK MOUNTING PLATE C
SCALE: 3" = 1'-0" S10.5 S10.5

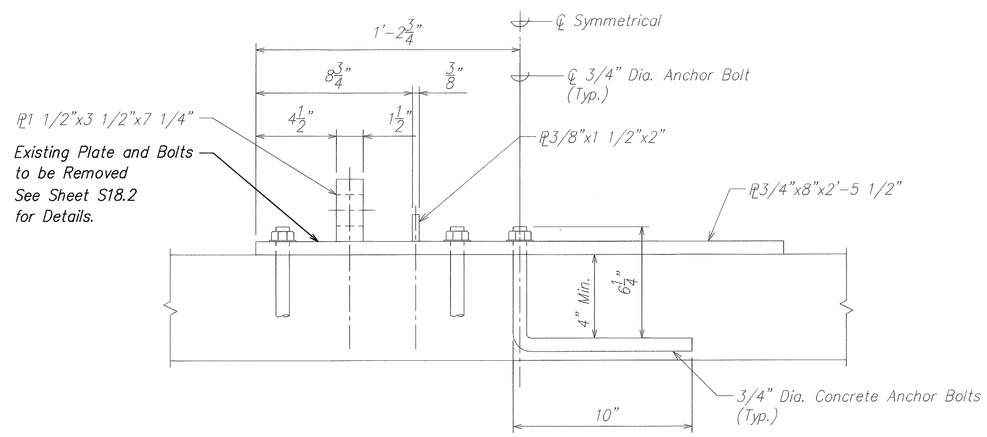

FRONT VIEW OF DECK MOUNTING PLATE D
SCALE: 3" = 1'-0" S10.5 S10.5

DAVID K. FUJIWARA
LICENSED PROFESSIONAL ENGINEER
NO. 8104-S
HAWAII, U.S.A.

THIS WORK WAS PREPARED BY ME OR UNDER MY SUPERVISION.

SIGNATURE — EXPIRATION DATE OF THE LICENSE 4-30-04

STATE OF HAWAII
DEPARTMENT OF TRANSPORTATION
HIGHWAYS DIVISION

SECTIONS & DETAILS
KEEHI INTERCHANGE
INTERSTATE ROUTE H-1
GUARDRAIL AND SHOULDER IMPROVEMENTS
Airport Interchange to Middle Street
Federal Aid Project No. IM-H1-1(240)

SCALE: As Noted — DATE: OCTOBER 2003

SHEET No. S10.5 OF 111 SHEETS

73

ORIGINAL PLAN	SURVEY PLOTTED BY	DATE
	DRAWN BY	
NOTE BOOK	TRACED BY	
	DESIGNED BY	
	QUANTITIES BY	
No.	CHECKED BY	

FILE: PCGS105.DWG
PLOT: 1 = 1

\\Cad1\ksf\2000\0066-H1 GUARDRAIL\11-05-03\PCGS1004.dwg, 11/5/2003 11:02:43 AM, KSFinc.pc3, 1:1

FED. ROAD DIST. NO.	STATE	FED. AID PROJ. NO.	FISCAL YEAR	SHEET NO.	TOTAL SHEETS
HAWAII	HAW.	IM-H1-1(240)	2004	74	143

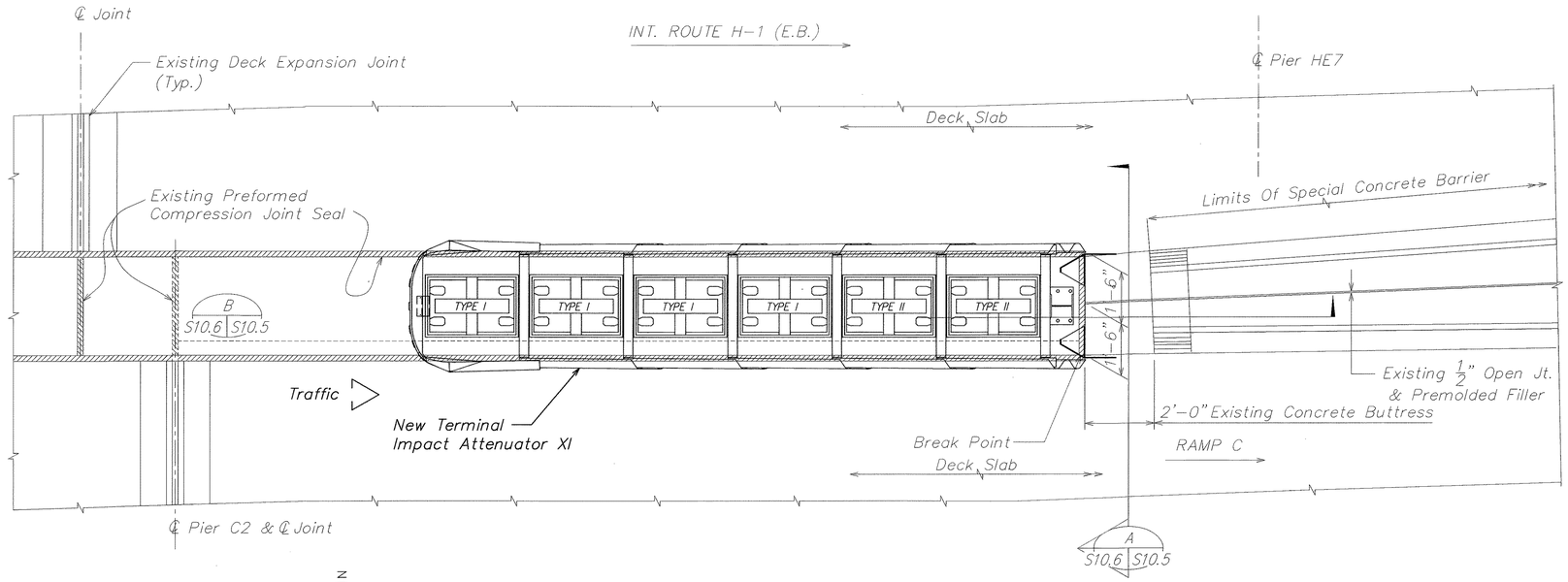

EXISTING PARTIAL DECK PLAN AT SPANS 7HE, 2, & 3C

A S10.6 S10.6

Scale: 1/2" = 1'-0"

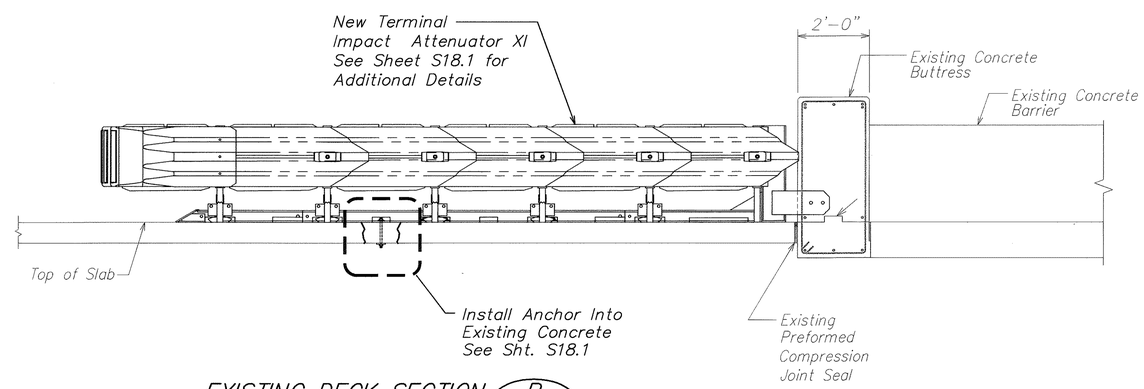

EXISTING DECK SECTION

B S10.6 S10.6

Scale: 1/2" = 1'-0"

DAVID K. FUJIWARA
LICENSED PROFESSIONAL ENGINEER
NO. 8104-S
HAWAII, U.S.A.

THIS WORK WAS PREPARED BY ME OR UNDER MY SUPERVISION.

SIGNATURE — EXPIRATION DATE OF THE LICENSE 4-30-04

STATE OF HAWAII
DEPARTMENT OF TRANSPORTATION
HIGHWAYS DIVISION

PARTIAL DECK PLAN
KEEHI INTERCHANGE
INTERSTATE ROUTE H-1
GUARDRAIL AND SHOULDER IMPROVEMENTS
Airport Interchange to Middle Street
Federal Aid Project No. IM-H1-1(240)

SCALE: As Noted — DATE: OCTOBER 2003

SHEET No. S10.6 OF 111 SHEETS

ORIGINAL PLAN — NOTE BOOK No.
SURVEY PLOTTED BY
DRAWN BY
TRACED BY
DESIGNED BY
QUANTITIES BY
CHECKED BY
DATE

FILE: P165107.DWG
PLOT: 1 = 1

C:\KSF\GUARDRAIL\10-24-03\PCGS1006.dwg, 10/24/2003 9:33:22 AM, KSFinc.pc3, 1:1

FED. ROAD DIST. NO.	STATE	FED. AID PROJ. NO.	FISCAL YEAR	SHEET NO.	TOTAL SHEETS
HAWAII	HAW.	IM-H1-1(240)	2004	75	143

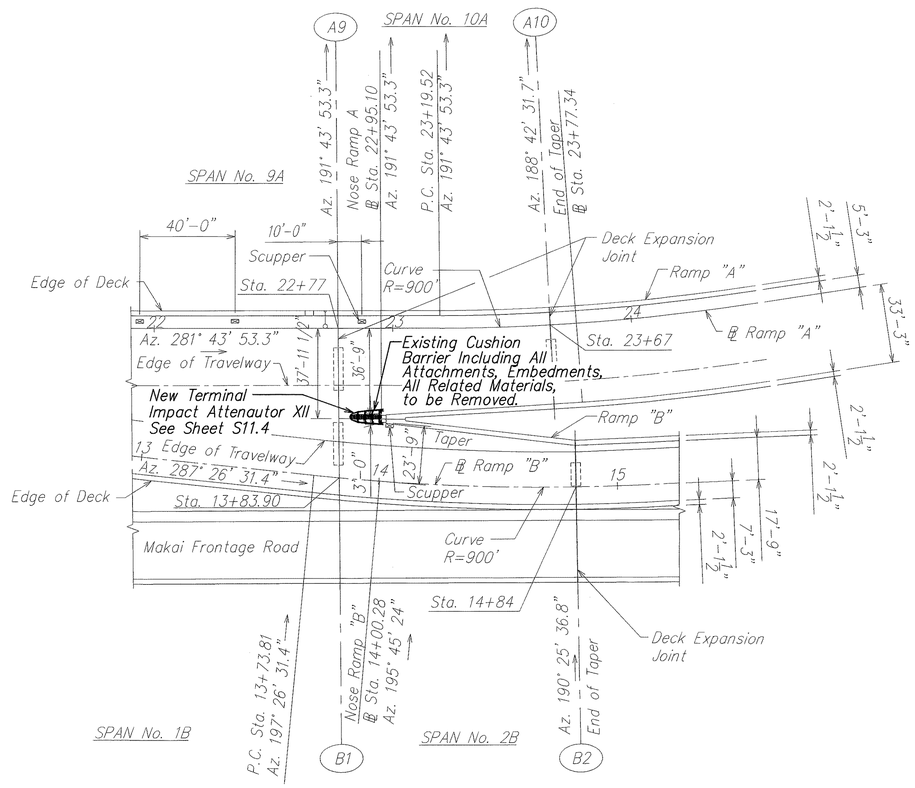

PARTIAL LAYOUT PLAN RAMP "A" AND RAMP "B" BETWEEN GRIDS A-8 AND A-10/B-2

SCALE: 1" = 30'-0"

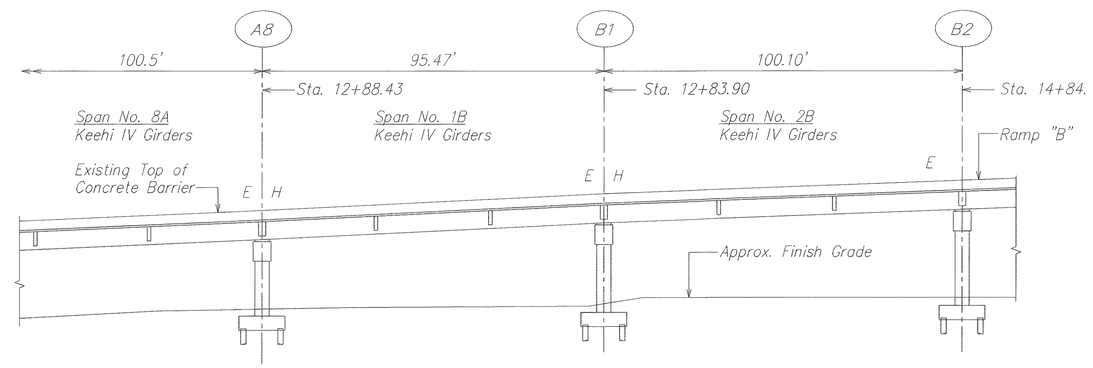

EXISTING LONGITUDINAL SECTION ALONG ℄ RAMP "B"

SCALE: 1" = 20'-0"

A
S11.1 S11.1

ORIGINAL PLAN	SURVEY PLOTTED BY	DATE
	DRAWN BY	
NOTE BOOK	TRACED BY	
	DESIGNED BY	
No.	QUANTITIES BY	
	CHECKED BY	

DAVID K. FUJIWARA
LICENSED PROFESSIONAL ENGINEER
NO. 8104-S
HAWAII, U.S.A.

THIS WORK WAS PREPARED BY ME OR UNDER MY SUPERVISION.

SIGNATURE — EXPIRATION DATE OF THE LICENSE 4-30-04

STATE OF HAWAII
DEPARTMENT OF TRANSPORTATION
HIGHWAYS DIVISION

PARTIAL ROADWAY PLAN
NIMITZ CONN. EAST BOUND
INTERSTATE ROUTE H-1
GUARDRAIL AND SHOULDER IMPROVEMENTS
Airport Interchange to Middle Street
Federal Aid Project No. IM-H1-1(240)

SCALE: As Noted — DATE: OCTOBER 2003

SHEET No. S11.1 OF 111 SHEETS

FILE: PCGS111.DWG
PLOT: 1 = 1

C:\KSF\GUARDRAIL\10-24-03\PCGS101.dwg, 10/24/2003 10:27:17 AM, KSFinc.pc3, 1:1

FED. ROAD DIST. NO.	STATE	FED. AID PROJ. NO.	FISCAL YEAR	SHEET NO.	TOTAL SHEETS
HAWAII	HAW.	IM-H1-1(240)	2004	76	143

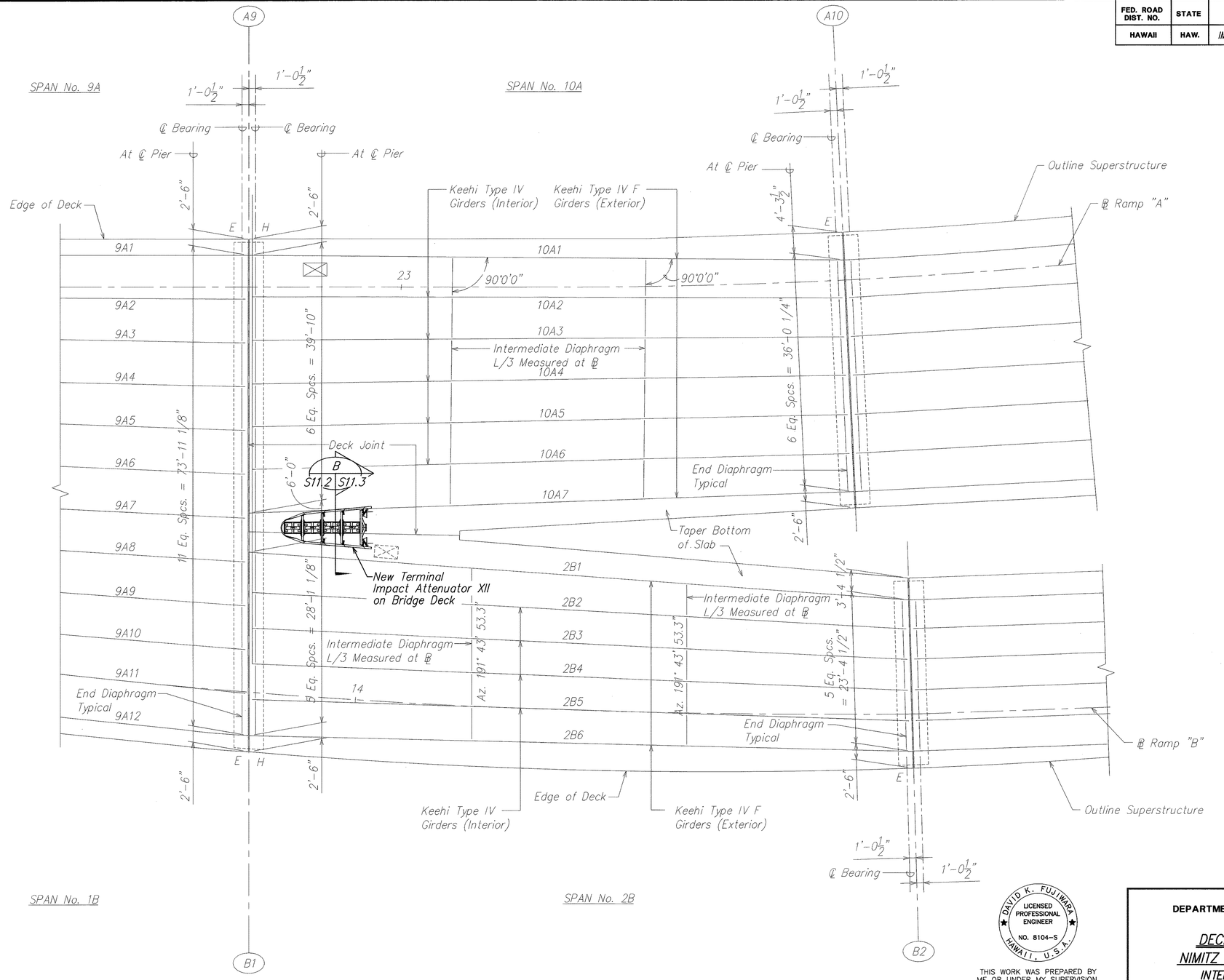

ORIGINAL PLAN	SURVEY PLOTTED BY	DATE
NOTE BOOK	DRAWN BY	
	TRACED BY	
	DESIGNED BY	
	QUANTITIES BY	
No.	CHECKED BY	

DAVID K. FUJIWARA LICENSED PROFESSIONAL ENGINEER NO. 8104-S HAWAII, U.S.A.

THIS WORK WAS PREPARED BY ME OR UNDER MY SUPERVISION.

SIGNATURE — EXPIRATION DATE OF THE LICENSE 4-30-04

STATE OF HAWAII
DEPARTMENT OF TRANSPORTATION
HIGHWAYS DIVISION

DECK FRAMING PLAN
NIMITZ CONN. EAST BOUND
INTERSTATE ROUTE H-1
GUARDRAIL AND SHOULDER IMPROVEMENTS
Airport Interchange to Middle Street
Federal Aid Project No. IM-H1-1(240)

SCALE: As Noted — DATE: OCTOBER 2003

EXISTING DECK FRAMING PLAN – NIMITZ CONNECTION (EB) RAMPS "A" & "B"

SCALE: 1/8" = 1'-0"

SHEET No. S11.2 OF 111 SHEETS

FILE: PCGS111.DWG
PLOT: 1 = 1

C:\KSF\GUARDRAIL\10-24-03\PCGS1101.dwg, 10/24/2003 10:27:49 AM, KSFinc.pc3, 1:1

FED. ROAD DIST. NO.	STATE	FED. AID PROJ. NO.	FISCAL YEAR	SHEET NO.	TOTAL SHEETS
HAWAII	HAW.	IM-H1-1(240)	2004	77	143

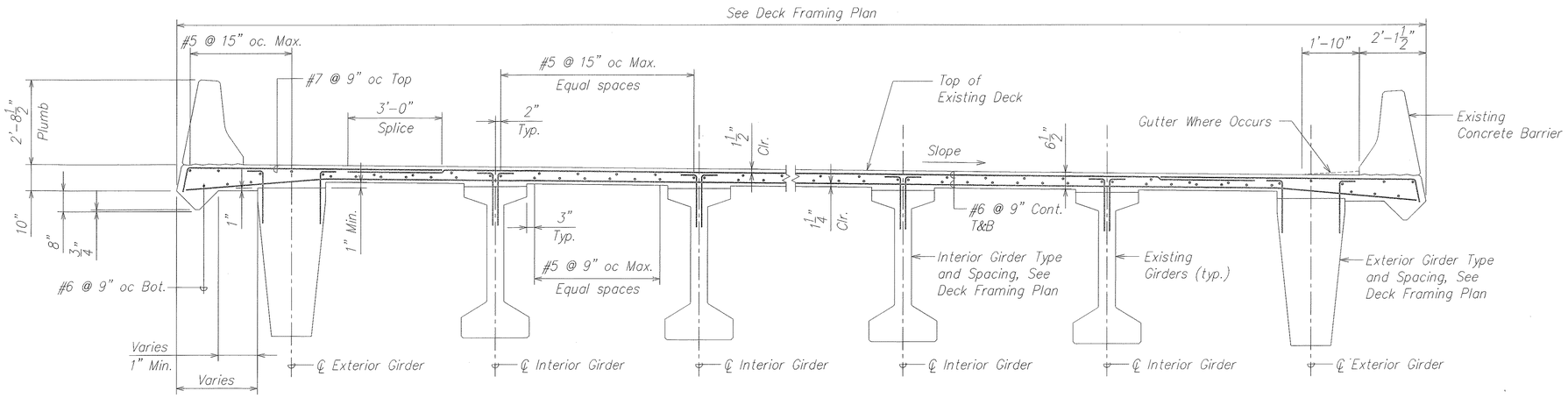

TYPICAL EXISTING DECK SECTION
RAMP "A" STA. 18+82 THRU RAMP "A" STA. 23+67 & RAMP "B" STA. 14+84

SCALE: 1/2" = 1'-0"

A
S11.3 | S11.3

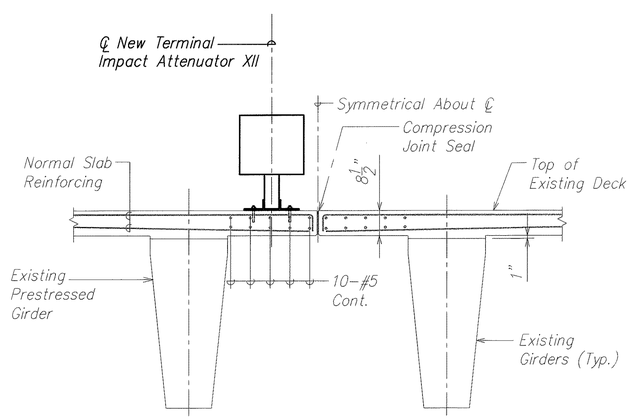

EXISTING DECK SECTION

SCALE: 1/2" = 1'-0"

B
S11.3 | S11.3

ORIGINAL PLAN	SURVEY PLOTTED BY	DATE
	DRAWN BY	
NOTE BOOK	TRACED BY	
	DESIGNED BY	
	QUANTITIES BY	
No.	CHECKED BY	

DAVID K. FUJIWARA
LICENSED PROFESSIONAL ENGINEER
NO. 8104-S
HAWAII, U.S.A.

THIS WORK WAS PREPARED BY ME OR UNDER MY SUPERVISION.

SIGNATURE — EXPIRATION DATE OF THE LICENSE 4-30-04

STATE OF HAWAII
DEPARTMENT OF TRANSPORTATION
HIGHWAYS DIVISION

SECTIONS
NIMITZ CONN. EAST BOUND
INTERSTATE ROUTE H-1
GUARDRAIL AND SHOULDER IMPROVEMENTS
Airport Interchange to Middle Street
Federal Aid Project No. IM-H1-1(240)

SCALE: As Noted — DATE: OCTOBER 2003

SHEET No. S11.3 OF 111 SHEETS

C:\KSF\GUARDRAIL\10-24-03\PCGS1103.dwg, 10/24/2003 10:28:52 AM, KSFinc.pc3, 1:1
FILE: PCGS1113.DWG
PLOT: 1 = 1

FED. ROAD DIST. NO.	STATE	FED. AID PROJ. NO.	FISCAL YEAR	SHEET NO.	TOTAL SHEETS
HAWAII	HAW.	IM-H1-1(240)	2004	78	143

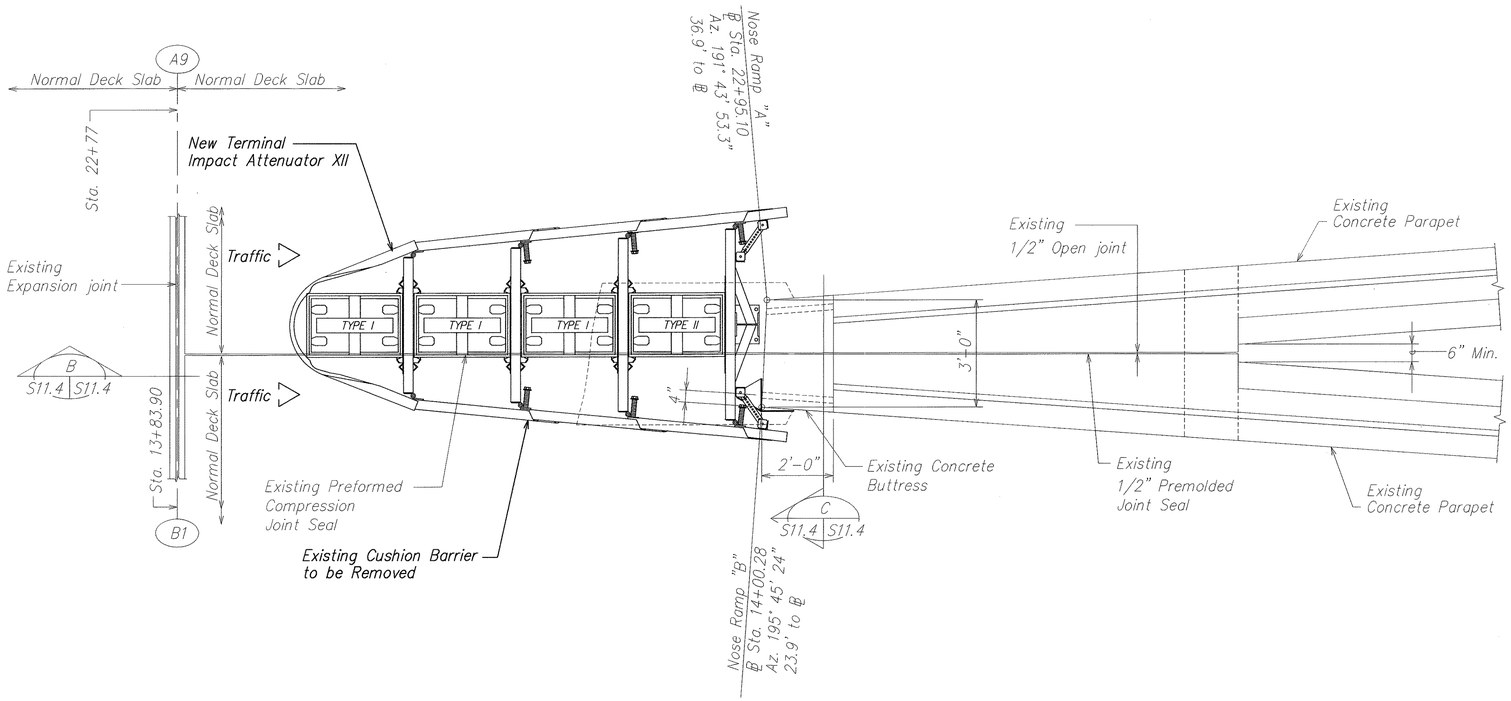

PARTIAL EXISTING DETAIL PLAN AT RAMP "A" & RAMP "B" NOSE

SCALE: 1/2" = 1'-0"

A S11.1 S11.4

N

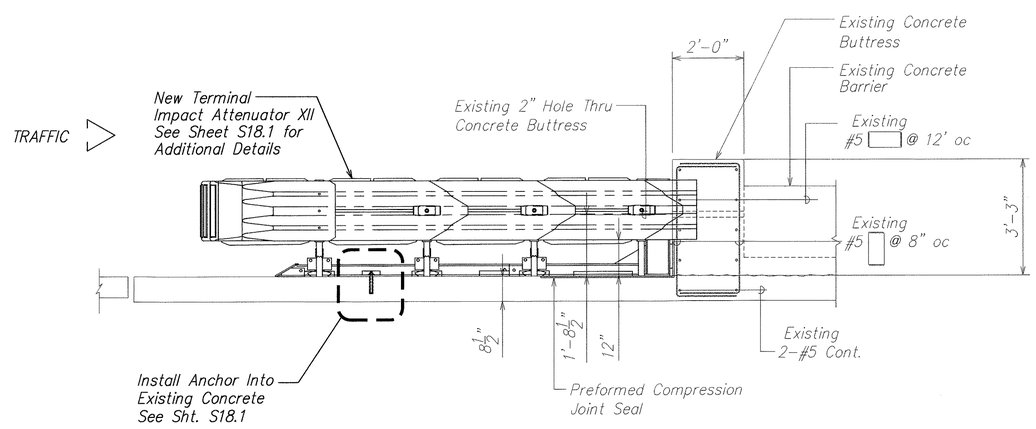

EXISTING SECTION

SCALE: 1/2" = 1'-0"

B S11.4 S11.4

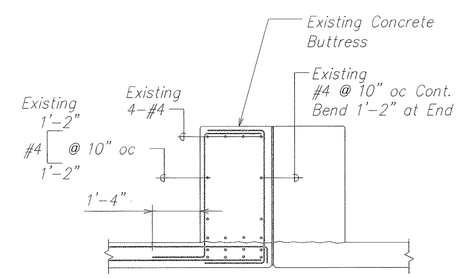

EXISTING CONCRETE BUTRESS SECTION

SCALE: 1/2" = 1'-0"

C S11.4 S11.4

DAVID K. FUJIWARA LICENSED PROFESSIONAL ENGINEER NO. 8104-S HAWAII, U.S.A.

THIS WORK WAS PREPARED BY ME OR UNDER MY SUPERVISION.

SIGNATURE — EXPIRATION DATE OF THE LICENSE 4-30-04

STATE OF HAWAII
DEPARTMENT OF TRANSPORTATION
HIGHWAYS DIVISION

PLAN AND SECTIONS
NIMITZ CONN. EAST BOUND
INTERSTATE ROUTE H-1
GUARDRAIL AND SHOULDER IMPROVEMENTS
Airport Interchange to Middle Street
Federal Aid Project No. IM-H1-1(240)

SCALE: As Noted — DATE: OCTOBER 2003

SHEET No. S11.4 OF 111 SHEETS

78

ORIGINAL PLAN | SURVEY PLOTTED BY | DRAWN BY | TRACED BY | DESIGNED BY | QUANTITIES BY | CHECKED BY | DATE | NOTE BOOK No.

FILE: PCGS114.DWG
PLOT: 1 = 1

\\C.cd1\xsf\2000\0066-H1 GUARDRAIL\11-05-03\PCGS1103.dwg, 11/5/2003 11:03:43 AM, KSFinc.pc3, 1:1

FED. ROAD DIST. NO.	STATE	FED. AID PROJ. NO.	FISCAL YEAR	SHEET NO.	TOTAL SHEETS
HAWAII	HAW.	IM-H1-1(240)	2004	79	143

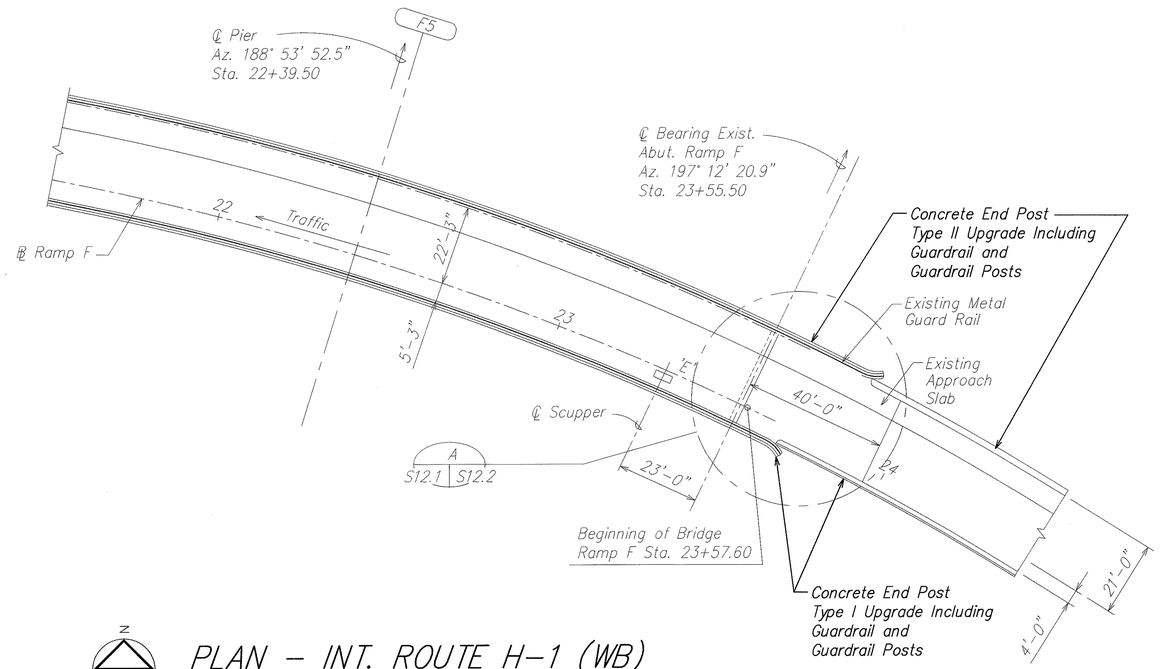

N

PLAN – INT. ROUTE H-1 (WB)
RAMP F

SCALE: 1" = 20'-0"

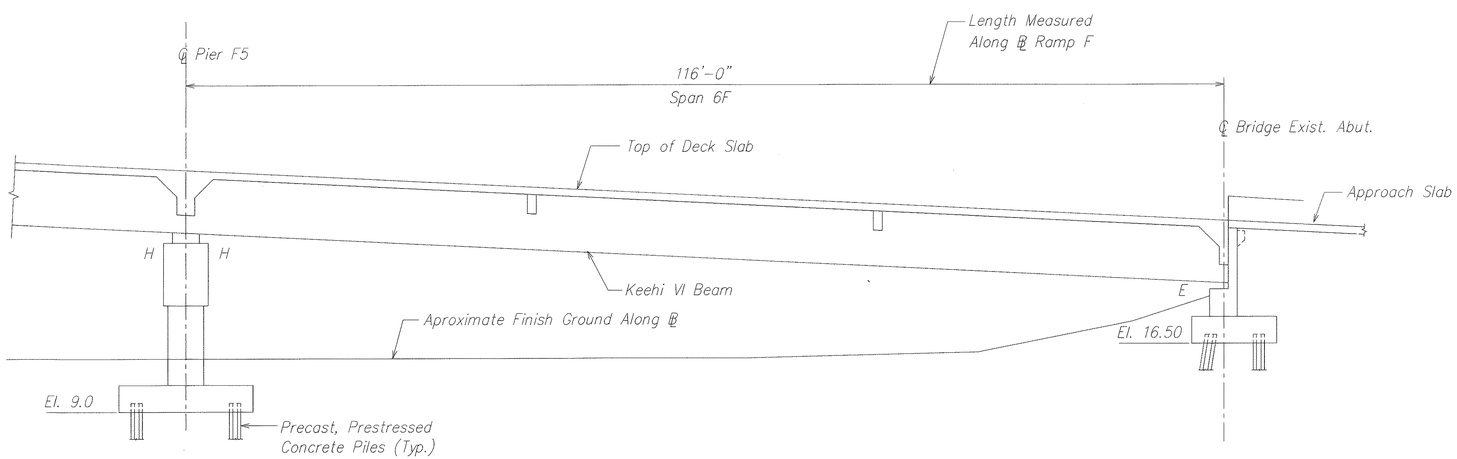

ELEVATION

SCALE: 1/8" = 1'-0"

ORIGINAL PLAN	SURVEY PLOTTED BY	DATE
	DRAWN BY	"
NOTE BOOK	TRACED BY	"
	DESIGNED BY	"
	QUANTITIES BY	"
No.	CHECKED BY	"

DAVID K. FUJIWARA
LICENSED PROFESSIONAL ENGINEER
NO. 8104-S
HAWAII, U.S.A.

THIS WORK WAS PREPARED BY ME OR UNDER MY SUPERVISION.

SIGNATURE — EXPIRATION DATE OF THE LICENSE 4-30-04

STATE OF HAWAII
DEPARTMENT OF TRANSPORTATION
HIGHWAYS DIVISION

GENERAL PLAN
H-1 VIADUCT RAMP F
INTERSTATE ROUTE H-1
GUARDRAIL AND SHOULDER IMPROVEMENTS
Airport Interchange to Middle Street
Federal Aid Project No. IM-H1-1(240)

SCALE: As Noted — DATE: OCTOBER 2003

SHEET No. S12.1 OF 111 SHEETS

FILE: PCGS121.DWG
PLOT: 1 = 1

C:\KSF\GUARDRAIL\10-24-03\PCGS1201.dwg, 10/24/2003 12:04:29 PM, KSFinc.pc3, 1:1

FED. ROAD DIST. NO.	STATE	FED. AID PROJ. NO.	FISCAL YEAR	SHEET NO.	TOTAL SHEETS
HAWAII	HAW.	IM-H1-1(240)	2004	80	143

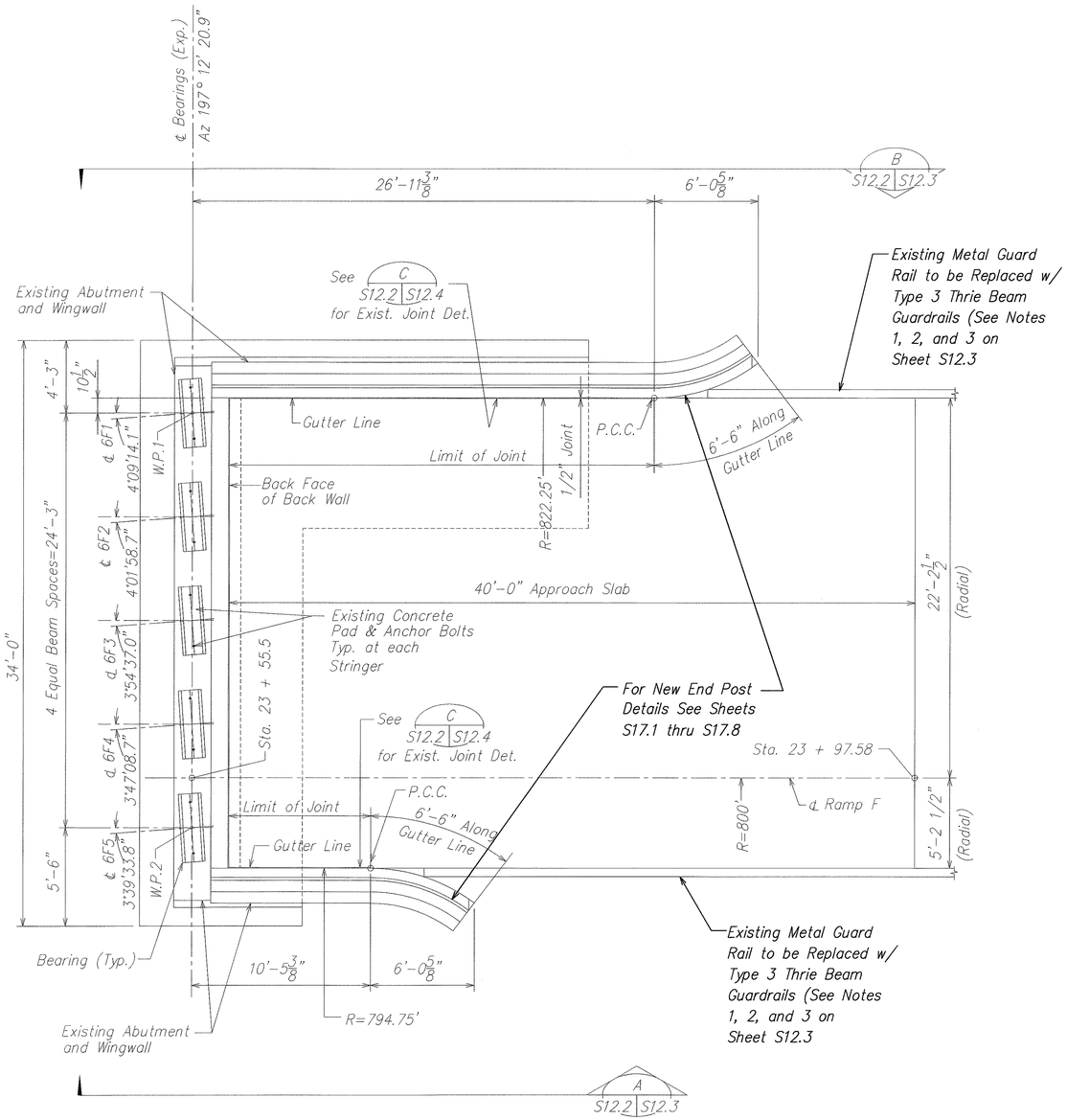

PLAN EXISTING EAST ABUTMENT AND WINGWALLS (A S12.1 S12.2)

SCALE: 1/4' = 1'-0"

ORIGINAL PLAN	SURVEY PLOTTED BY	DATE
	DRAWN BY	
NOTE BOOK	TRACED BY	
	DESIGNED BY	
	QUANTITIES BY	
No.	CHECKED BY	

DAVID K. FUJIWARA LICENSED PROFESSIONAL ENGINEER NO. 8104-S HAWAII, U.S.A.

THIS WORK WAS PREPARED BY ME OR UNDER MY SUPERVISION.

SIGNATURE — EXPIRATION DATE OF THE LICENSE 4-30-04

STATE OF HAWAII
DEPARTMENT OF TRANSPORTATION
HIGHWAYS DIVISION

PLAN
H-1 VIADUCT RAMP F
INTERSTATE ROUTE H-1
GUARDRAIL AND SHOULDER IMPROVEMENTS
Airport Interchange to Middle Street
Federal Aid Project No. IM-H1-1(240)

SCALE: As Noted — DATE: OCTOBER 2003

SHEET No. S12.2 OF 111 SHEETS

FILE: PCDS122.DWG
PLOT: 1 = 1

C:\KSF\GUARDRAIL\10-24-03\PCDS1202.dwg, 10/24/2003 10:30:46 AM, KSFinc.pc3, 1:1

FED. ROAD DIST. NO.	STATE	FED. AID PROJ. NO.	FISCAL YEAR	SHEET NO.	TOTAL SHEETS
HAWAII	HAW.	IM-H1-1(240)	2004	81	143

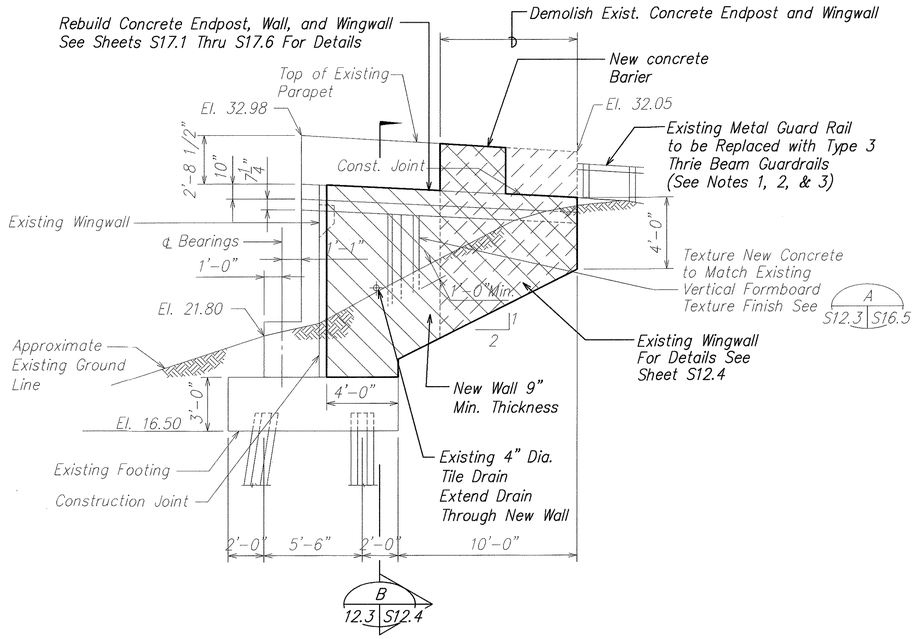

CONCRETE END POST TYPE I (A / S12.2 S12.3)

SCALE: 1/4" =1'-0"

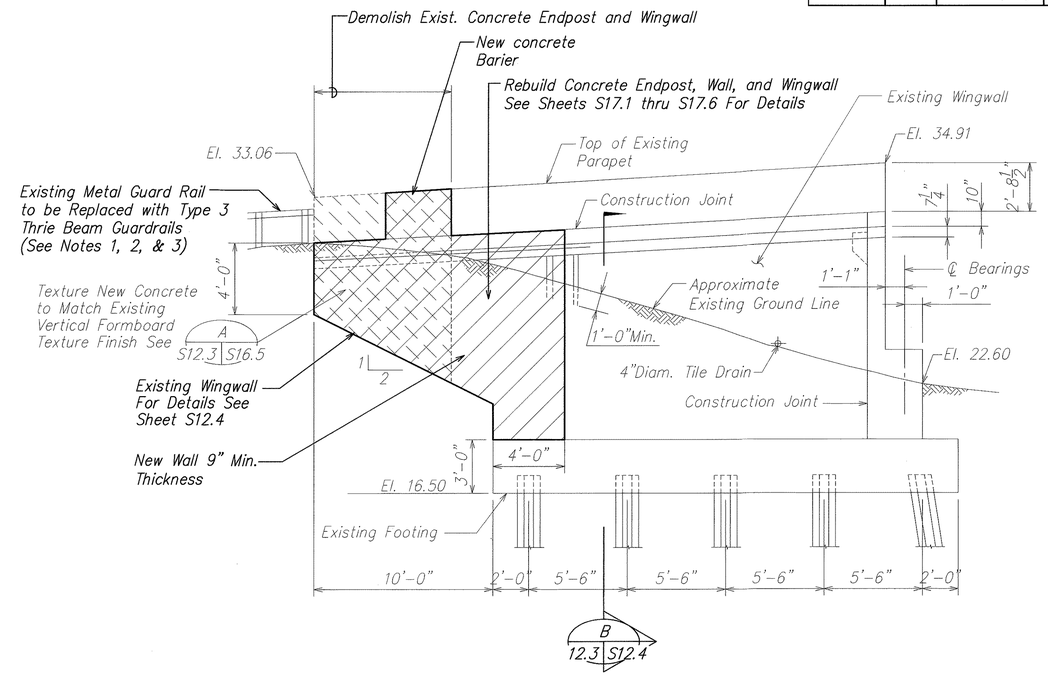

CONCRETE END POST TYPE II (B / S12.2 S12.3)

SCALE: 1/4" =1'-0"

NOTES:

1. Metal guardrail posts and metal guardrails shall be installed as shown on sheets S17.1 thru S17.8.
2. Type 3 thrie beam metal guardrail shall be installed as shown on sheets S17.1 thru S17.8
3. Existing guardrails and guardrail posts shall be removed and/or reset in such a way that the new guardrails can be installed and a smooth transition is provided between the new guardrails and the existing guardrails.

ORIGINAL PLAN	SURVEY PLOTTED BY	DATE
	DRAWN BY	
NOTE BOOK	TRACED BY	
	DESIGNED BY	
	QUANTITIES BY	
No.	CHECKED BY	

DAVID K. FUJIWARA
LICENSED PROFESSIONAL ENGINEER
NO. 8104-S
HAWAII, U.S.A.

THIS WORK WAS PREPARED BY ME OR UNDER MY SUPERVISION.

SIGNATURE — EXPIRATION DATE OF THE LICENSE 4-30-04

STATE OF HAWAII
DEPARTMENT OF TRANSPORTATION
HIGHWAYS DIVISION

CONCRETE END POSTS
H-1 VIADUCT RAMP F
INTERSTATE ROUTE H-1
GUARDRAIL AND SHOULDER IMPROVEMENTS
Airport Interchange to Middle Street
Federal Aid Project No. IM-H1-1(240)

SCALE: As Noted — DATE: OCTOBER 2003

SHEET No. S12.3 OF 111 SHEETS

FILE: PCCS1203.DWG
PLOT: 1 = 1
C:\KSF\GUARDRAIL\10-24-03\PCCS1203.dwg, 10/24/2003 10:31:13 AM, KSFinc.pc3, 1:1

FED. ROAD DIST. NO.	STATE	FED. AID PROJ. NO.	FISCAL YEAR	SHEET NO.	TOTAL SHEETS
HAWAII	HAW.	IM-H1-1(240)	2004	82	143

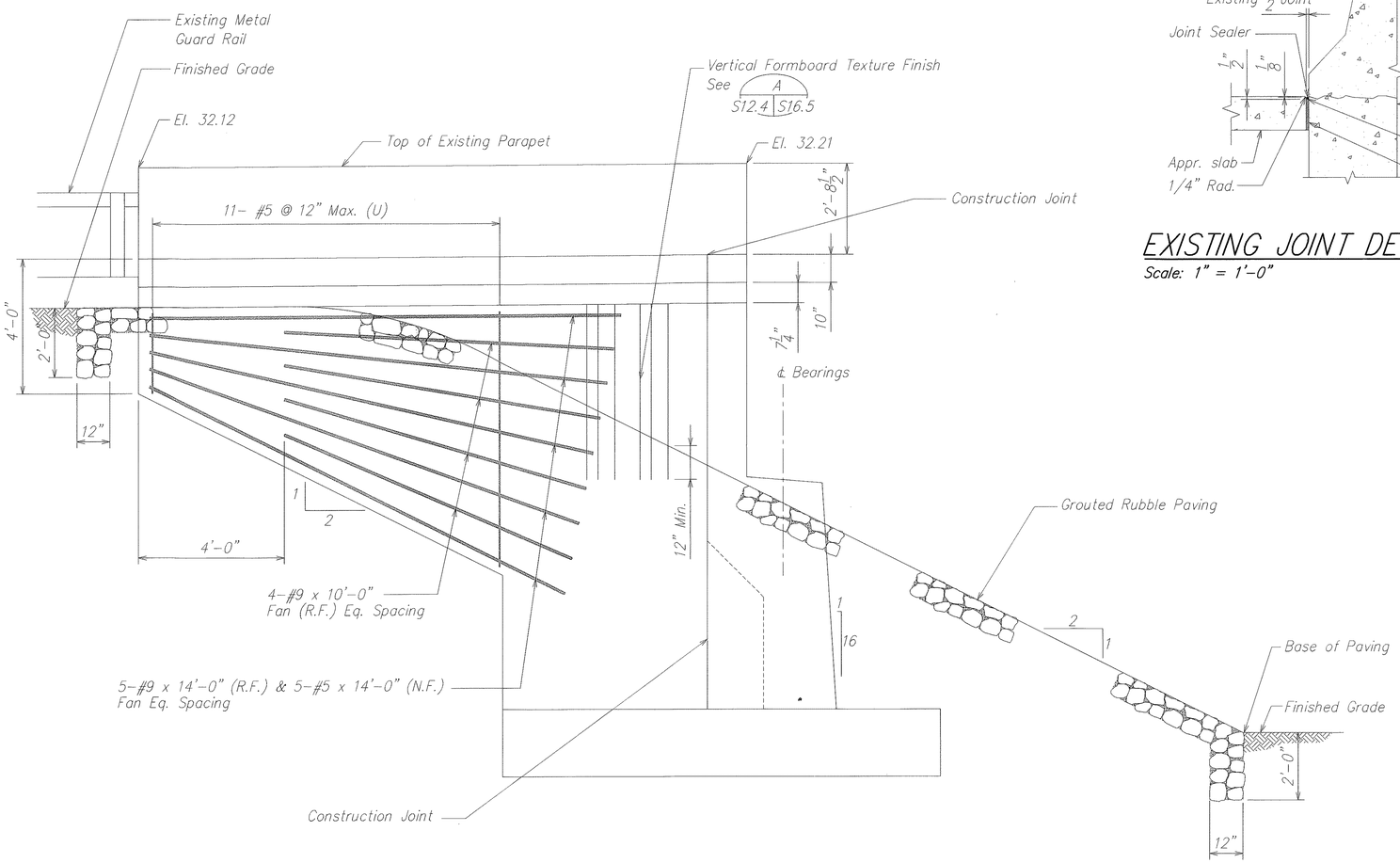

EXISTING WINGWALL A
Scale: 1/2" =1'-0"
S12.3 S12.4

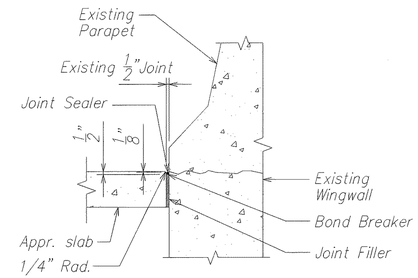

EXISTING JOINT DETAIL C
Scale: 1" = 1'-0"
S12.2 S12.4
S12.4

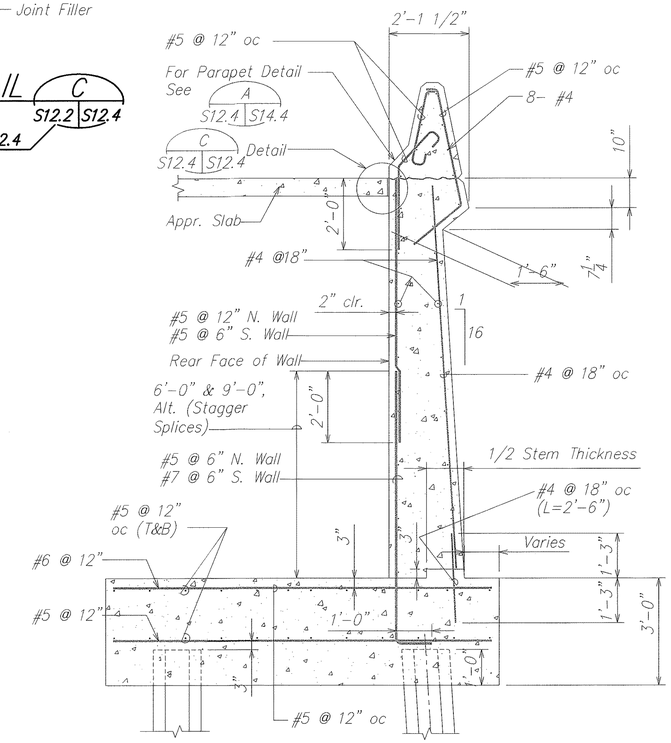

EXISTING WALL - SECTION B
Scale: 1/2" =1'-0"
S12.3 S12.4

NOTE:
All reinforcing shown on this sheet are existing rebars.

ORIGINAL PLAN	SURVEY PLOTTED BY	DATE
	DRAWN BY	
NOTE BOOK	TRACED BY	
	DESIGNED BY	
	QUANTITIES BY	
No.	CHECKED BY	

DAVID K. FUJIWARA LICENSED PROFESSIONAL ENGINEER NO. 8104-S HAWAII, U.S.A.

THIS WORK WAS PREPARED BY ME OR UNDER MY SUPERVISION.

SIGNATURE — EXPIRATION DATE OF THE LICENSE 4-30-04

STATE OF HAWAII
DEPARTMENT OF TRANSPORTATION
HIGHWAYS DIVISION

VIEW & SECTION
H-1 VIADUCT RAMP F
INTERSTATE ROUTE H-1
GUARDRAIL AND SHOULDER IMPROVEMENTS
Airport Interchange to Middle Street
Federal Aid Project No. IM-H1-1(240)

SCALE: As Noted — DATE: OCTOBER 2003

SHEET No. S12.4 OF 111 SHEETS

FILE: PCGS124.DWG
PLOT: 1 = 1

C:\KSF\GUARDRAIL\10-24-03\PCGS1204.dwg, 10/24/2003 10:31:49 AM, KSFinc.pc3, 1:1

FED. ROAD DIST. NO.	STATE	FED. AID PROJ. NO.	FISCAL YEAR	SHEET NO.	TOTAL SHEETS
HAWAII	HAW.	IM-H1-1(240)	2004	83	143

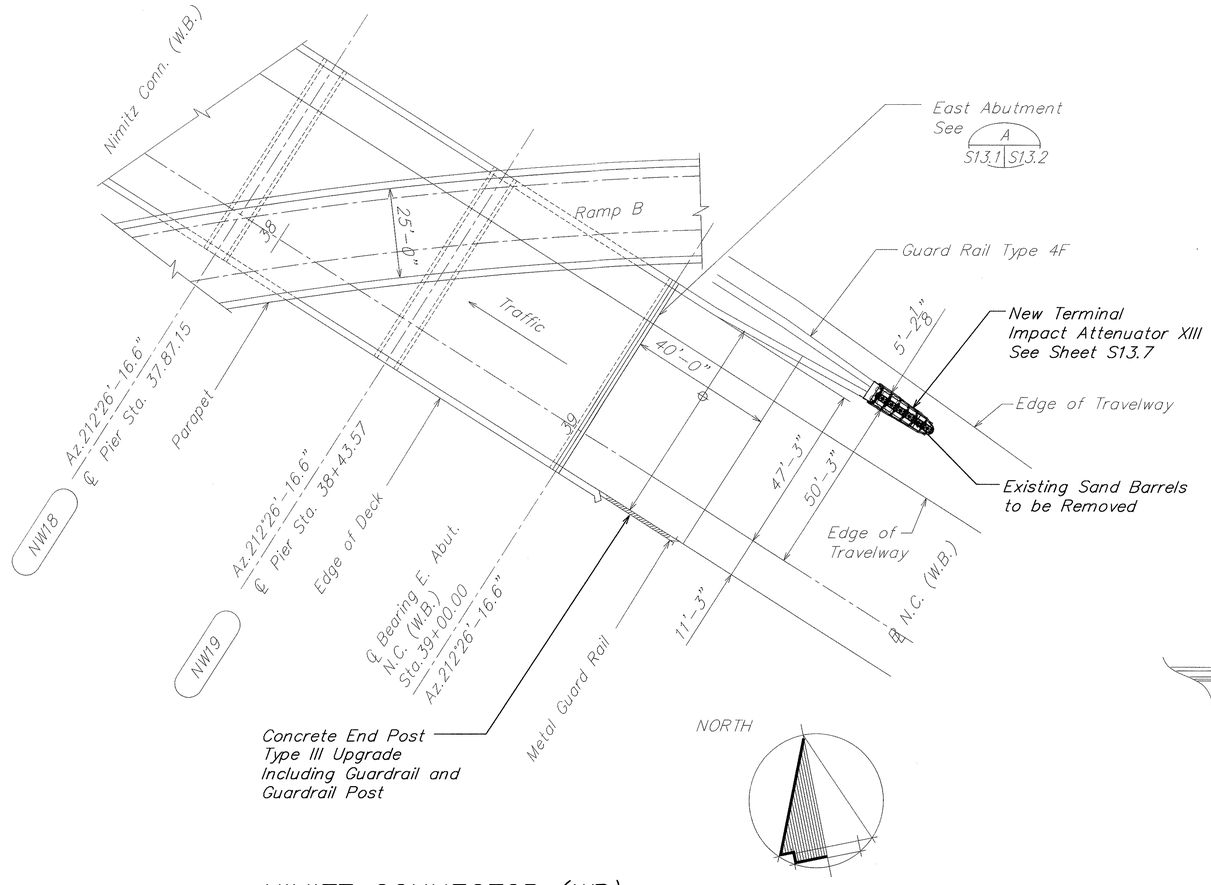

NIMITZ CONNECTOR (WB)

SCALE: 1" = 20'

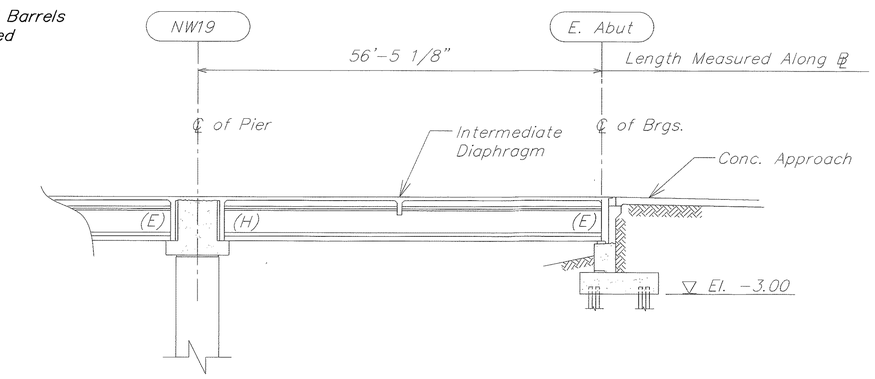

LONGITUDINAL SECTION – NIMITZ CONNECTOR (WB)

SCALE: 1" = 10'-0"

(Taken Along ℄)

ORIGINAL PLAN	SURVEY PLOTTED BY	DATE
	DRAWN BY	
NOTE BOOK	TRACED BY	
	DESIGNED BY	
	QUANTITIES BY	
No.	CHECKED BY	

DAVID K. FUJIWARA
LICENSED PROFESSIONAL ENGINEER
NO. 8104-S
HAWAII, U.S.A.

THIS WORK WAS PREPARED BY ME OR UNDER MY SUPERVISION.

SIGNATURE — EXPIRATION DATE OF THE LICENSE 4-30-04

STATE OF HAWAII
DEPARTMENT OF TRANSPORTATION
HIGHWAYS DIVISION

PLAN AND SECTION
NIMITZ CONN. WEST BOUND
INTERSTATE ROUTE H-1
GUARDRAIL AND SHOULDER IMPROVEMENTS
Airport Interchange to Middle Street
Federal Aid Project No. IM-H1-1(240)

SCALE: As Noted — DATE: OCTOBER 2003

SHEET No. S13.1 OF 111 SHEETS

FILE: PCGS131.DWG
PLOT: 1 = 1

C:\KSF\GUARDRAIL\10-24-03\PCGS1301.dwg, 10/24/2003 10:32:33 AM, KSFinc.pc3, 1:1

FED. ROAD DIST. NO.	STATE	FED. AID PROJ. NO.	FISCAL YEAR	SHEET NO.	TOTAL SHEETS
HAWAII	HAW.	IM-H1-1(240)	2004	84	143

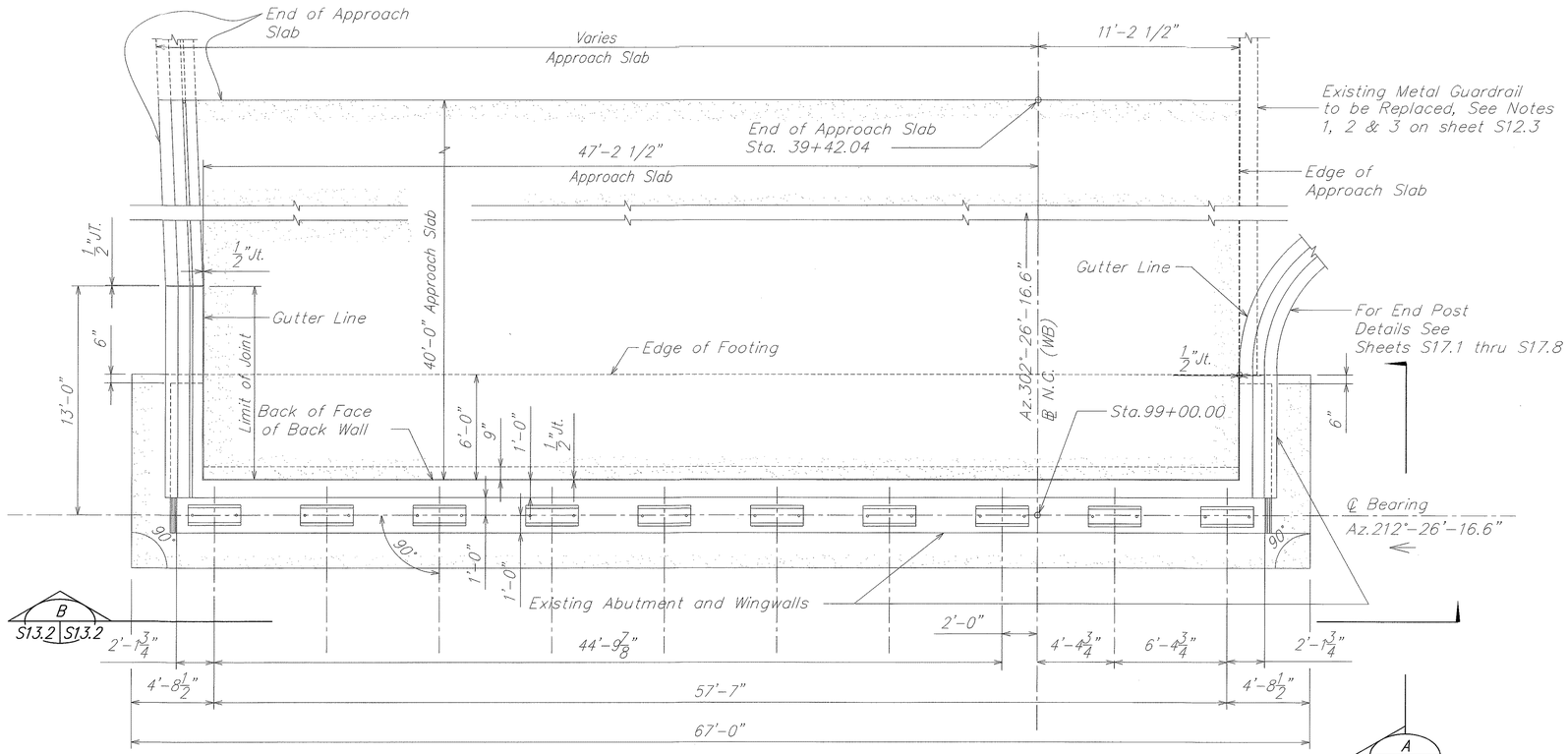

PLAN EXISTING EAST ABUTMENT (A / S13.1 S13.2)

SCALE: 1/4" = 1'-0"

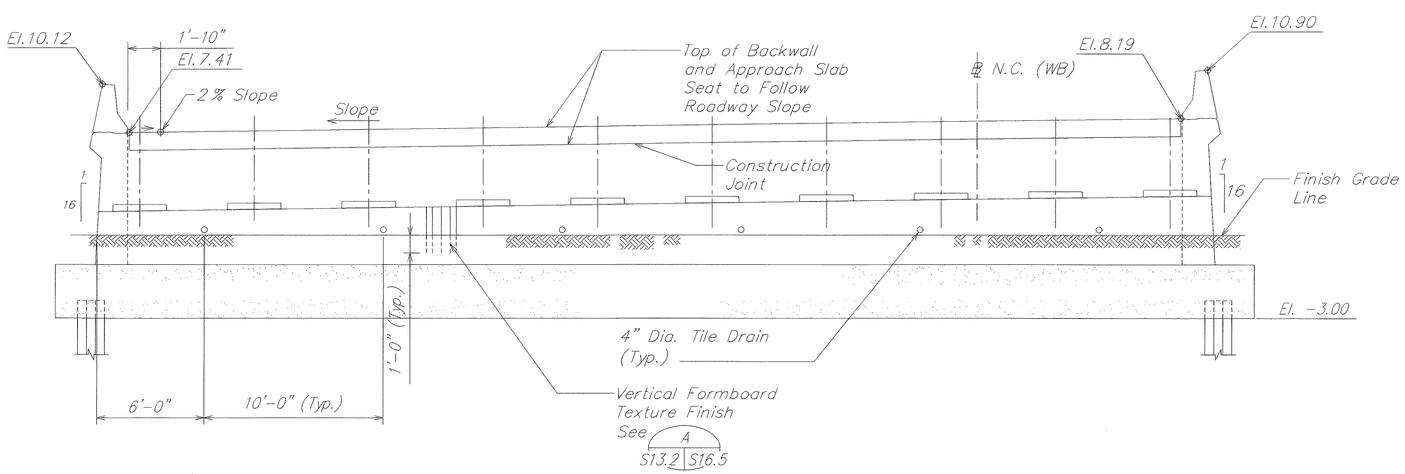

ELEVATION OF EXISTING EAST ABUTMENT (B / S13.2 S13.2)

SCALE: 1/4" = 1'-0"

ORIGINAL PLAN	SURVEY PLOTTED BY	DATE
	DRAWN BY	"
NOTE BOOK	TRACED BY	"
	DESIGNED BY	"
	QUANTITIES BY	"
No.	CHECKED BY	"

DAVID K. FUJIWARA LICENSED PROFESSIONAL ENGINEER NO. 8104-S HAWAII, U.S.A.

THIS WORK WAS PREPARED BY ME OR UNDER MY SUPERVISION.

SIGNATURE — EXPIRATION DATE OF THE LICENSE 4-30-04

STATE OF HAWAII
DEPARTMENT OF TRANSPORTATION
HIGHWAYS DIVISION

PLAN AND ELEVATION
NIMITZ CONN. WEST BOUND
INTERSTATE ROUTE H-1
GUARDRAIL AND SHOULDER IMPROVEMENTS
Airport Interchange to Middle Street
Federal Aid Project No. IM-H1-1(240)

SCALE: As Noted — DATE: OCTOBER 2003

SHEET No. S13.2 OF 111 SHEETS

FILE: PCGS13.2.DWG
PLOT: 1 = 1

C:\KSF\GUARDRAIL\10-24-03\PCGS1302.dwg, 10/24/2003 10:33:09 AM, KSFinc.pc3, 1:1

FED. ROAD DIST. NO.	STATE	FED. AID PROJ. NO.	FISCAL YEAR	SHEET NO.	TOTAL SHEETS
HAWAII	HAW.	IM-H1-1(240)	2004	85	143

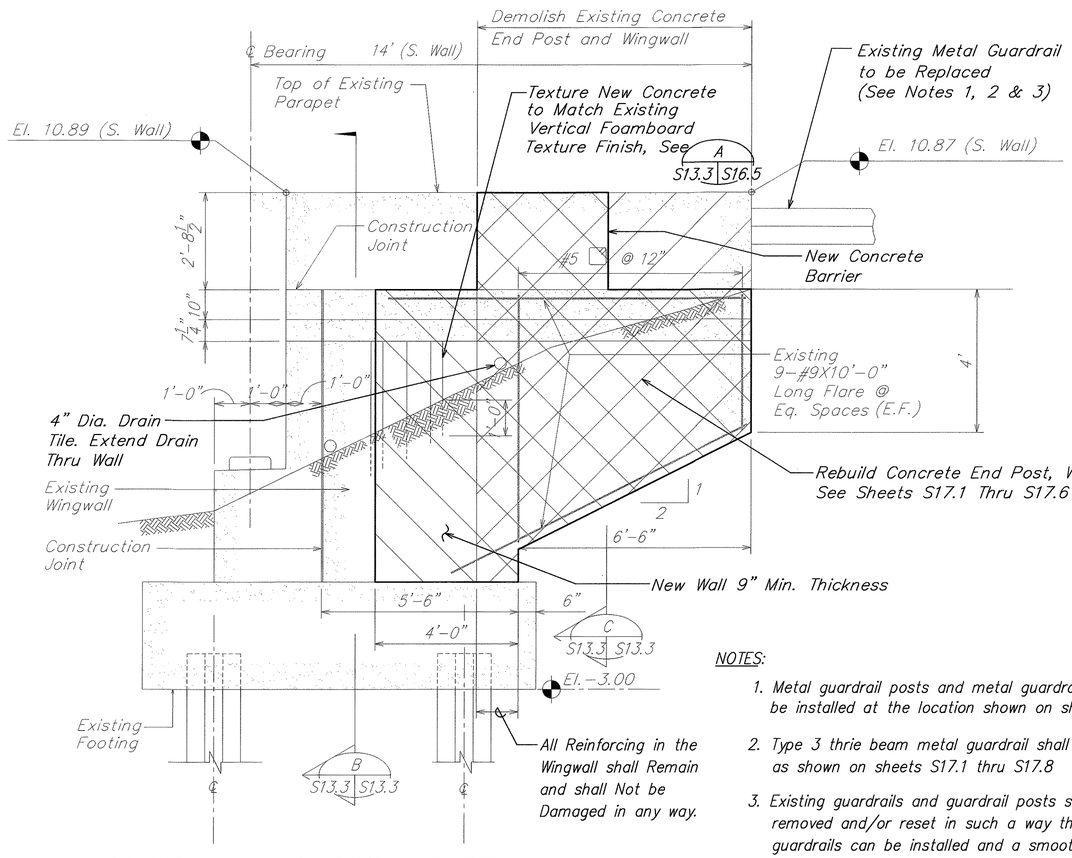

CONCRETE END POST, TYPE III (A S13.2 S13.3)

SCALE: 1/2" = 1'-0"

NOTES:

1. Metal guardrail posts and metal guardrails shall be installed at the location shown on sheets S17.1 thru S17.8.
2. Type 3 thrie beam metal guardrail shall be installed as shown on sheets S17.1 thru S17.8
3. Existing guardrails and guardrail posts shall be removed and/or reset in such a way that the new guardrails can be installed and a smooth transition is provided between the new guardrails and the existing guardrails.
4. All reinforcing shown on this sheet are existing rebars.

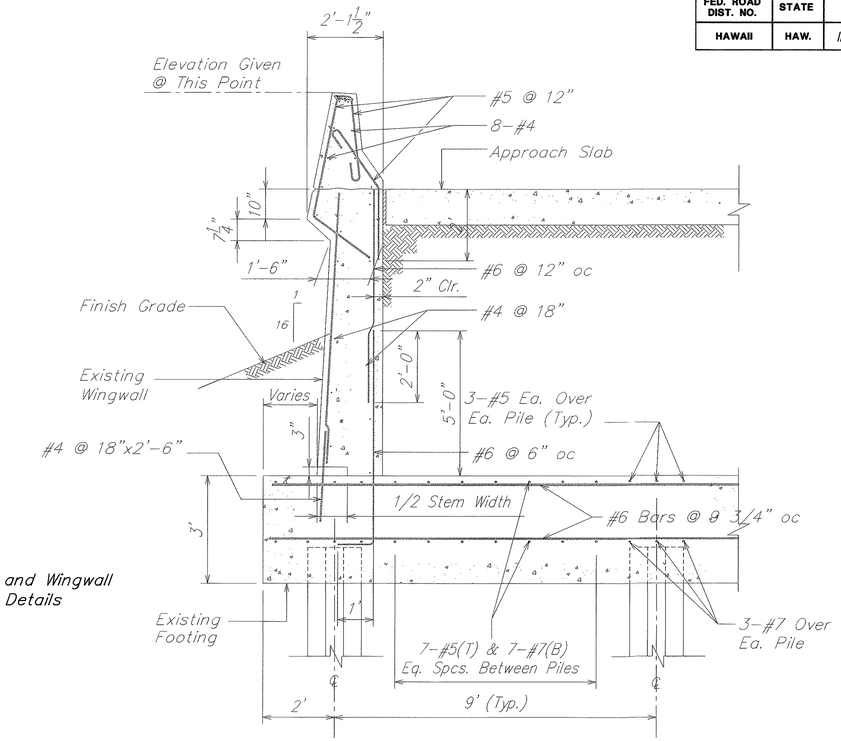

TYPICAL EXISTING WINGWALL SECTION (B S13.3 S13.3)

SCALE: 1/2" = 1'-0"

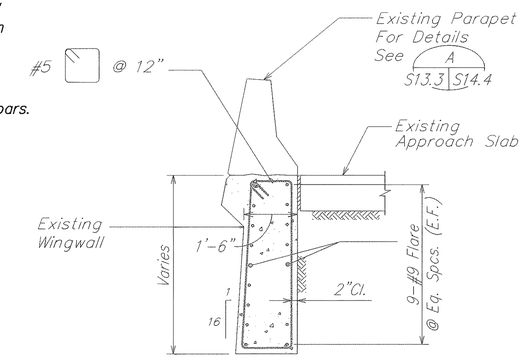

EXISTING CANTILEVER WINGWALL SECTION (C S13.3 S13.3)

SCALE: 1/2" = 1'-0"

DAVID K. FUJIWARA LICENSED PROFESSIONAL ENGINEER NO. 8104-S HAWAII, U.S.A.

THIS WORK WAS PREPARED BY ME OR UNDER MY SUPERVISION.

SIGNATURE — EXPIRATION DATE OF THE LICENSE 4-30-04

STATE OF HAWAII
DEPARTMENT OF TRANSPORTATION
HIGHWAYS DIVISION

SECTIONS AND ELEVATION
NIMITZ CONN. WEST BOUND
INTERSTATE ROUTE H-1
GUARDRAIL AND SHOULDER IMPROVEMENTS
Airport Interchange to Middle Street
Federal Aid Project No. IM-H1-1(240)

SCALE: As Noted — DATE: OCTOBER 2003

SHEET No. S13.3 OF 111 SHEETS

ORIGINAL PLAN — SURVEY PLOTTED BY — DRAWN BY — TRACED BY — DESIGNED BY — QUANTITIES BY — CHECKED BY — DATE — NOTE BOOK — No.

FILE: P205133.DWG
PLOT: 1 = 1

FED. ROAD DIST. NO.	STATE	FED. AID PROJ. NO.	FISCAL YEAR	SHEET NO.	TOTAL SHEETS
HAWAII	HAW.	IM-H1-1(240)	2004	86	143

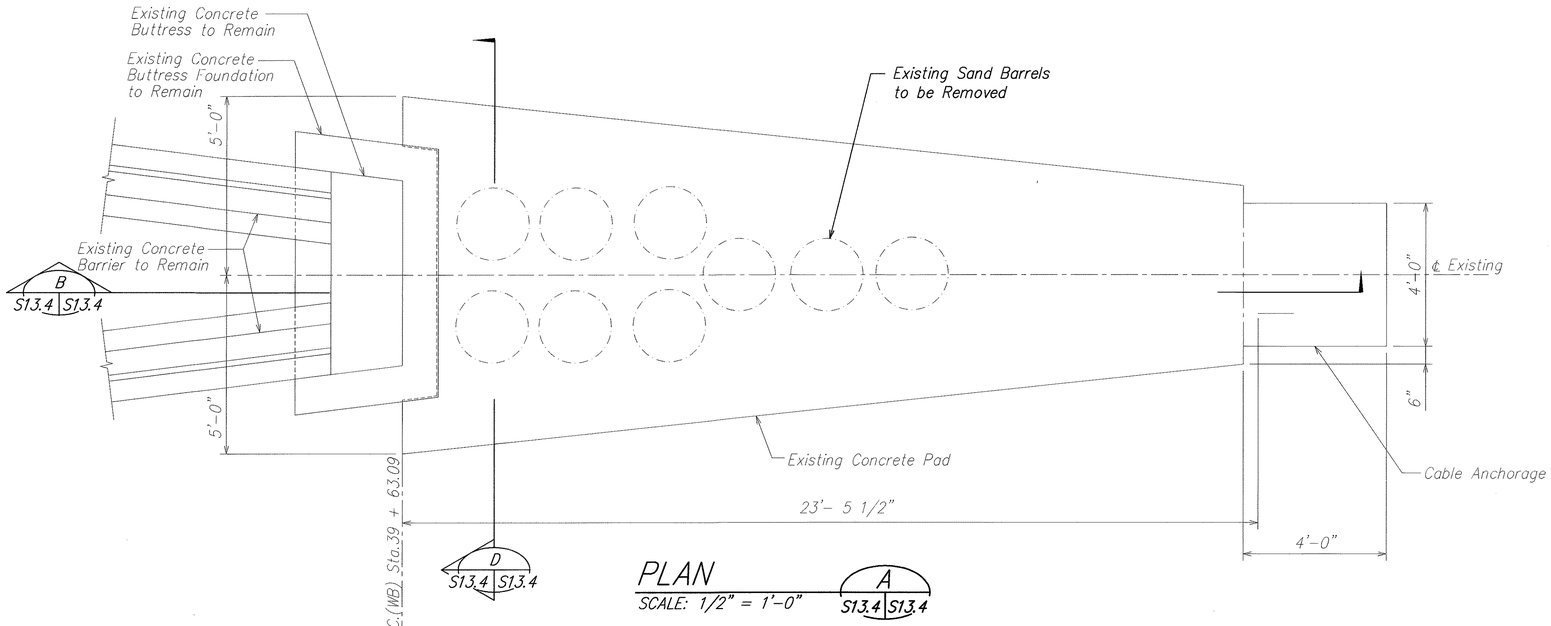

PLAN
SCALE: 1/2" = 1'-0"
A
S13.4 S13.4

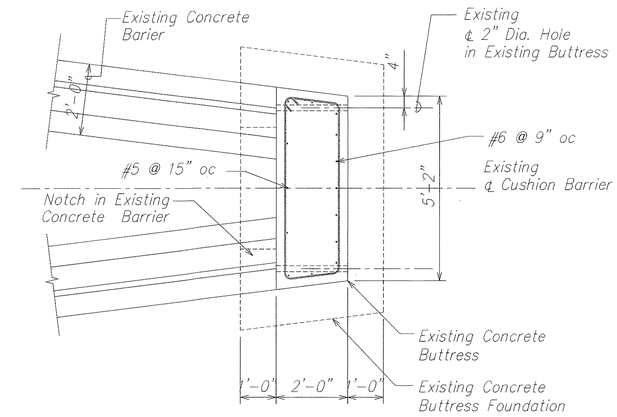

PLAN
SCALE: 1/2" = 1'-0"
C
S13.4 S13.4

Note:
All reinforcing shown on this Sheet are existing bars.

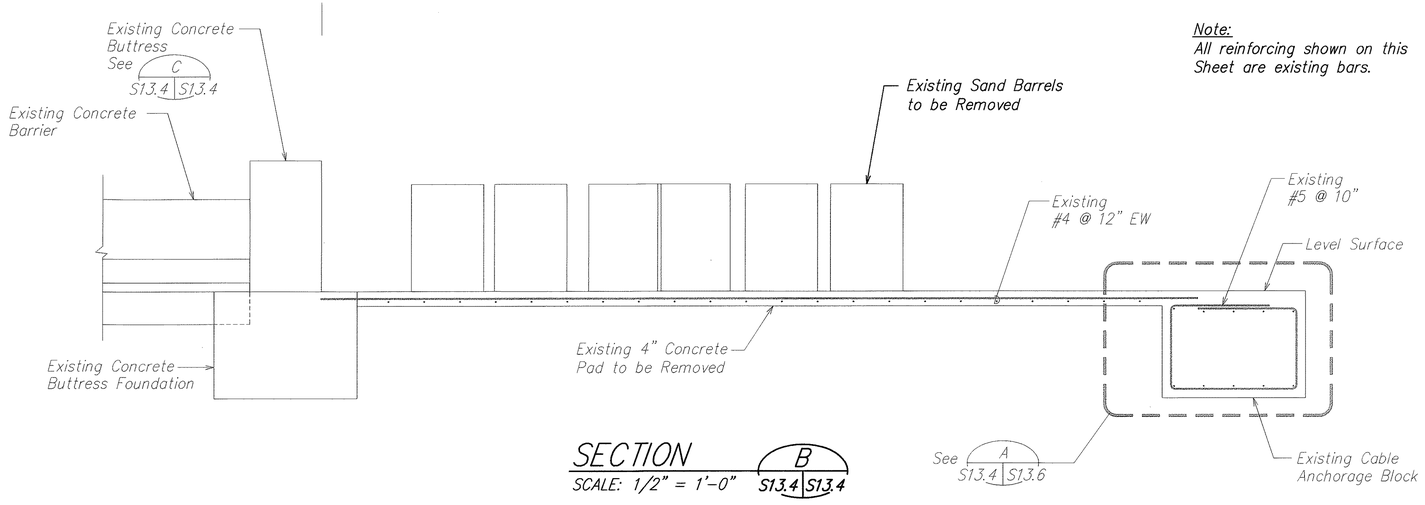

SECTION
SCALE: 1/2" = 1'-0"
B
S13.4 S13.4

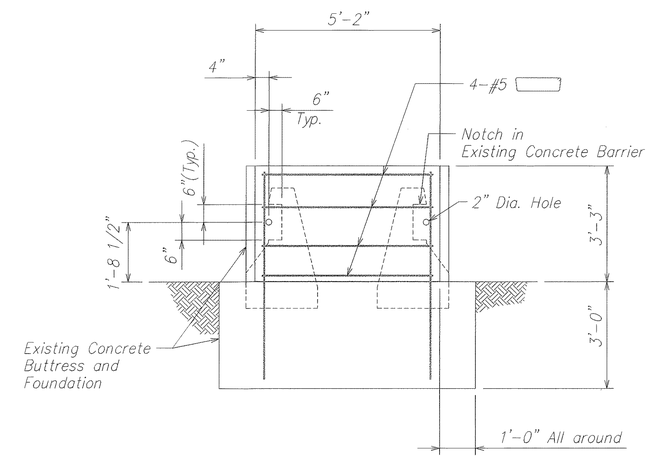

SECTION
SCALE: 1/2" = 1'-0"
D
S13.4 S13.4

ORIGINAL PLAN	SURVEY PLOTTED BY	DATE
	DRAWN BY	
NOTE BOOK	TRACED BY	
	DESIGNED BY	
No.	QUANTITIES BY	
	CHECKED BY	

DAVID K. FUJIWARA
LICENSED PROFESSIONAL ENGINEER
NO. 8104-S
HAWAII, U.S.A.

THIS WORK WAS PREPARED BY ME OR UNDER MY SUPERVISION.

SIGNATURE — EXPIRATION DATE OF THE LICENSE 4-30-04

STATE OF HAWAII
DEPARTMENT OF TRANSPORTATION
HIGHWAYS DIVISION

PLANS AND ELEVATIONS
NIMITZ CONN. WEST BOUND
INTERSTATE ROUTE H-1
GUARDRAIL AND SHOULDER IMPROVEMENTS
Airport Interchange to Middle Street
Federal Aid Project No. IM-H1-1(240)

SCALE: As Noted — DATE: OCTOBER 2003

SHEET No. S13.4 OF 111 SHEETS

86

FILE: PCGS134.DWG
PLOT: 1 = 1

\\Cad\ksf\2000\0066-H1 GUARDRAIL\11-05-03\PCGS1304.dwg, 11/4/2003 3:36:59 PM, KSFinc.pc3, 1:1

FED. ROAD DIST. NO.	STATE	FED. AID PROJ. NO.	FISCAL YEAR	SHEET NO.	TOTAL SHEETS
HAWAII	HAW.	IM-H1-1(240)	2004	87	143

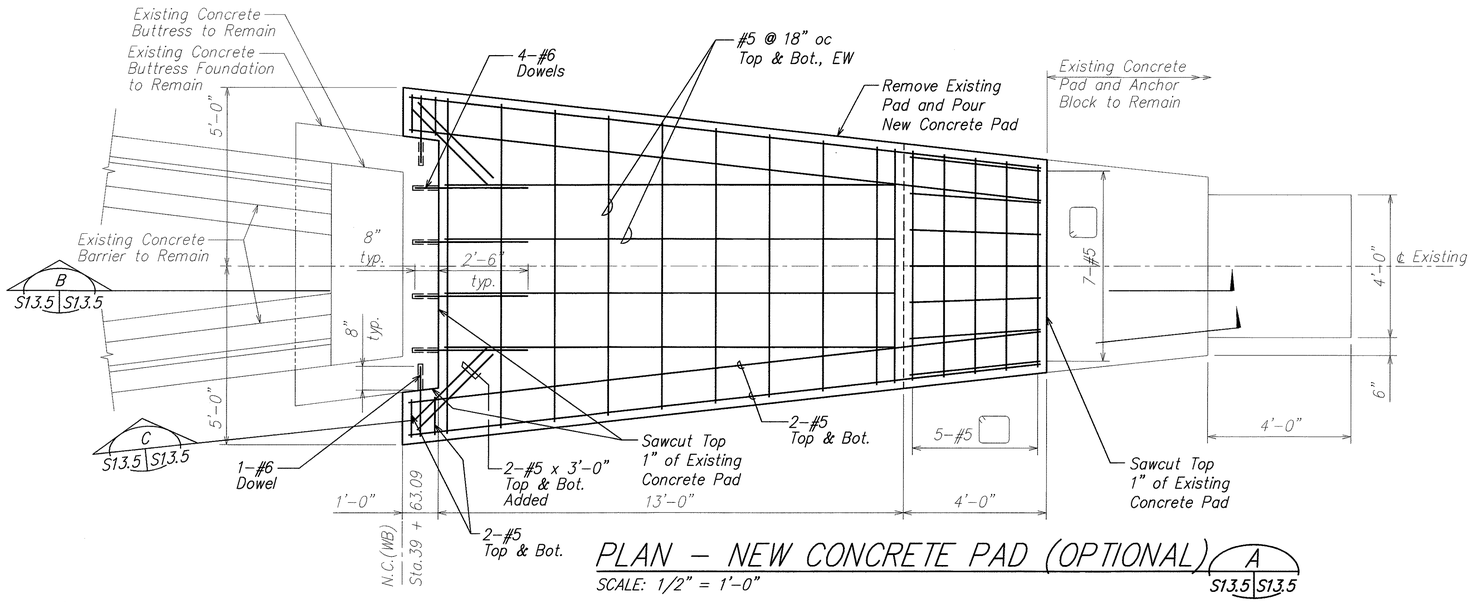

PLAN – NEW CONCRETE PAD (OPTIONAL) A S13.5 S13.5

SCALE: 1/2" = 1'-0"

NOTE:

1. Slab may be reused or removed and replaced according to the attenuator manufacturer's recommendations. All details for new concrete pad are optional. Size and details for new pad shall follow attenuator manufacturer's recommendations.
2. Details for a new concrete pad or for reusing the existing concrete pad shall be submitted for approval by the Engineer.
3. The cost of all work relating to the concrete pad shall be considered incidental to Section 693 – Terminal Impact Attenuator.

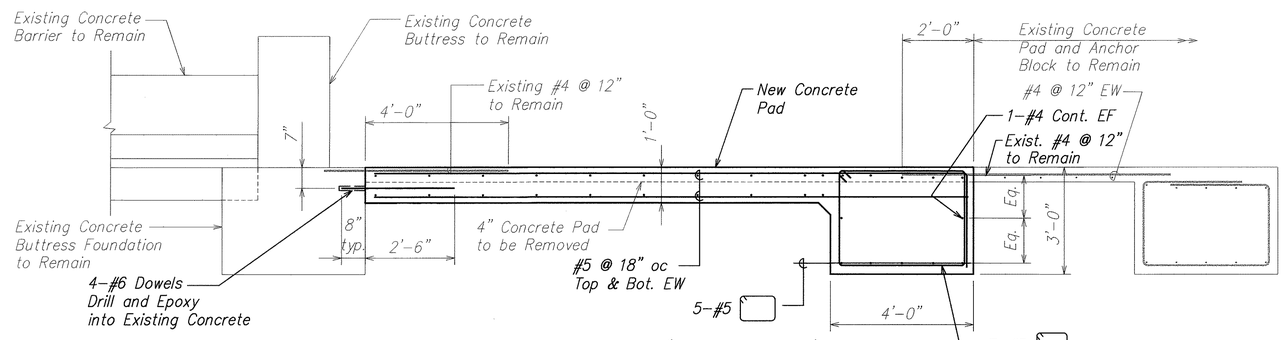

SECTION – NEW CONCRETE PAD (OPTIONAL) B S13.5 S13.5

SCALE: 1/2" = 1'-0"

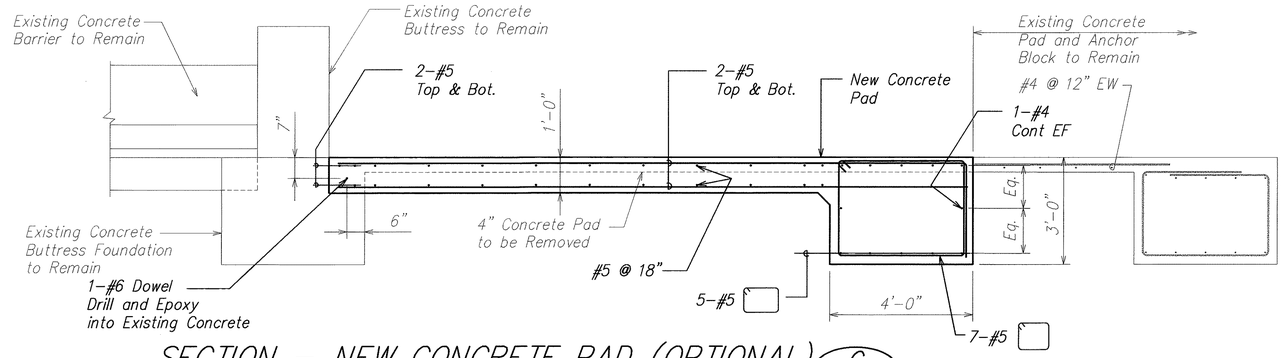

SECTION – NEW CONCRETE PAD (OPTIONAL) C S13.5 S13.5

SCALE: 1/2" = 1'-0"

ORIGINAL PLAN	SURVEY PLOTTED BY	DATE
	DRAWN BY	
	TRACED BY	
NOTE BOOK	DESIGNED BY	
	QUANTITIES BY	
No.	CHECKED BY	

THIS WORK WAS PREPARED BY ME OR UNDER MY SUPERVISION.

DAVID K. FUJIWARA LICENSED PROFESSIONAL ENGINEER NO. 8104-S HAWAII, U.S.A.

SIGNATURE — EXPIRATION DATE OF THE LICENSE 4-30-04

STATE OF HAWAII
DEPARTMENT OF TRANSPORTATION
HIGHWAYS DIVISION

PLAN AND SECTIONS
NIMITZ CONN. WEST BOUND
INTERSTATE ROUTE H-1
GUARDRAIL AND SHOULDER IMPROVEMENTS
Airport Interchange to Middle Street
Federal Aid Project No. IM-H1-1(240)

SCALE: As Noted — DATE: OCTOBER 2003

SHEET No. S13.5 OF 111 SHEETS

FILE: PCGS135.DWG
PLOT: 1 = 1

\\Cad1\ksf\2000\0066-H1 GUARDRAIL\11-05-03\PCGS1304.dwg, 11/4/2003 3:37:20 PM, KSFinc.pc3, 1:1

FED. ROAD DIST. NO.	STATE	FED. AID PROJ. NO.	FISCAL YEAR	SHEET NO.	TOTAL SHEETS
HAWAII	HAW.	IM-H1-1(240)	2004	88	143

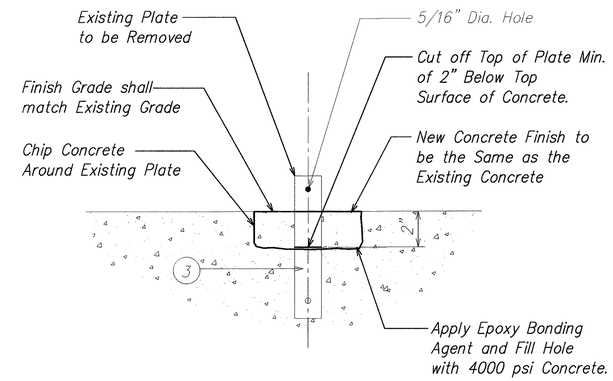

EXISTING PLATE DETAIL (D / S13.6 | S13.6)

SCALE: 3" = 1'-0"

Note:
All reinforcing shown on this sheet are existing bars.

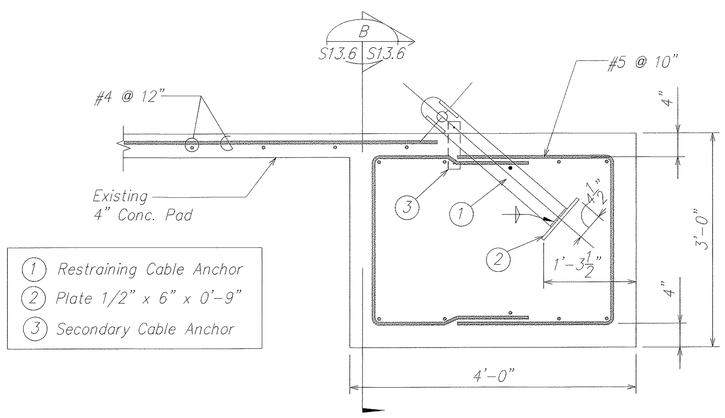

EXISTING ANCHOR BLOCK SECTION (A / S13.4 | S13.6)

SCALE: 1" = 1'-0"

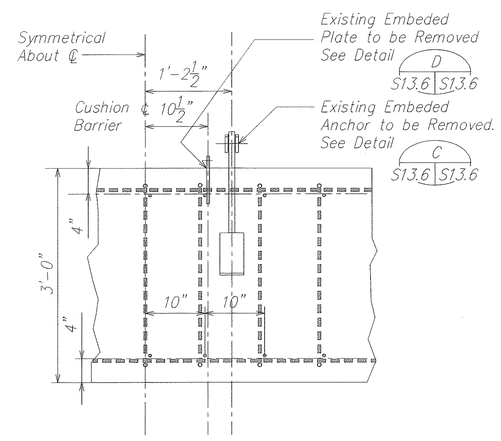

SECTION (B / S13.5 | S13.6)

SCALE: 1" = 1'-0"

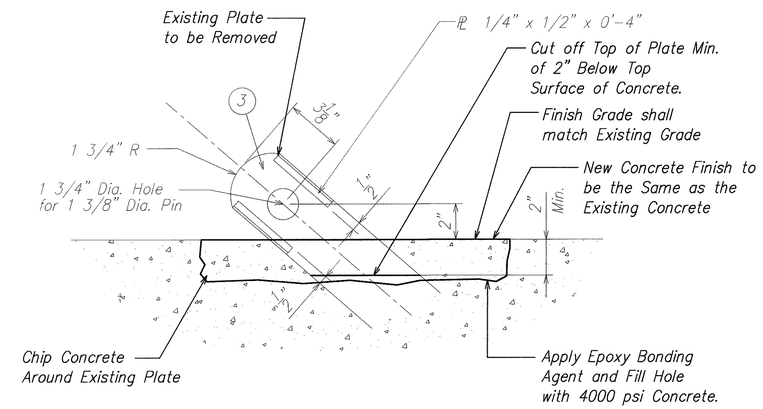

PLATE REMOVAL DETAIL (C / S13.6 | S13.6)

SCALE: 3" = 1'-0"

ORIGINAL PLAN	SURVEY PLOTTED BY	DATE
	DRAWN BY	
NOTE BOOK	TRACED BY	
	DESIGNED BY	
	QUANTITIES BY	
No.	CHECKED BY	

DAVID K. FUJIWARA
LICENSED PROFESSIONAL ENGINEER
NO. 8104-S
HAWAII, U.S.A.

THIS WORK WAS PREPARED BY ME OR UNDER MY SUPERVISION.

SIGNATURE — EXPIRATION DATE OF THE LICENSE 4-30-04

STATE OF HAWAII
DEPARTMENT OF TRANSPORTATION
HIGHWAYS DIVISION

PLAN, SECTIONS & DETAILS
NIMITZ CONN. WEST BOUND
INTERSTATE ROUTE H-1
GUARDRAIL AND SHOULDER IMPROVEMENTS
Airport Interchange to Middle Street
Federal Aid Project No. IM-H1-1(240)

SCALE: As Noted — DATE: OCTOBER 2003

SHEET No. S13.6 OF 111 SHEETS

\\C:\cad1\xsf\2000\0066-H1 GUARDRAIL\11-05-03\PCGS1306.dwg, 11/4/2003 3:37:59 PM, XSFinc.pc3, 1:1
FILE: P2DS1306.DWG
PLOT: 1 = 1

FED. ROAD DIST. NO.	STATE	FED. AID PROJ. NO.	FISCAL YEAR	SHEET NO.	TOTAL SHEETS
HAWAII	HAW.	IM-H1-1(240)	2004	89	143

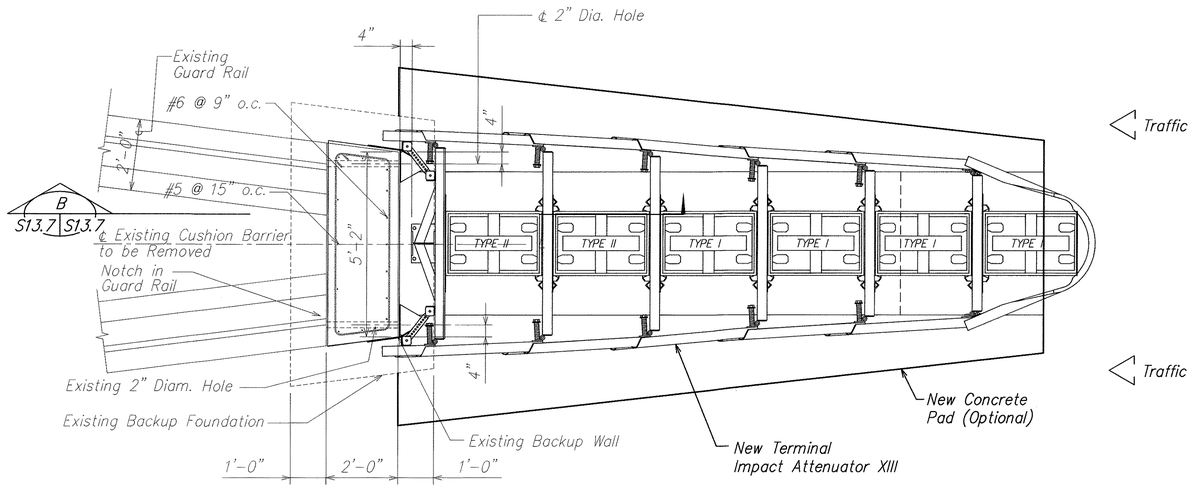

PLAN (A) S13.7 S13.7

SCALE: 1/2" = 1'-0"

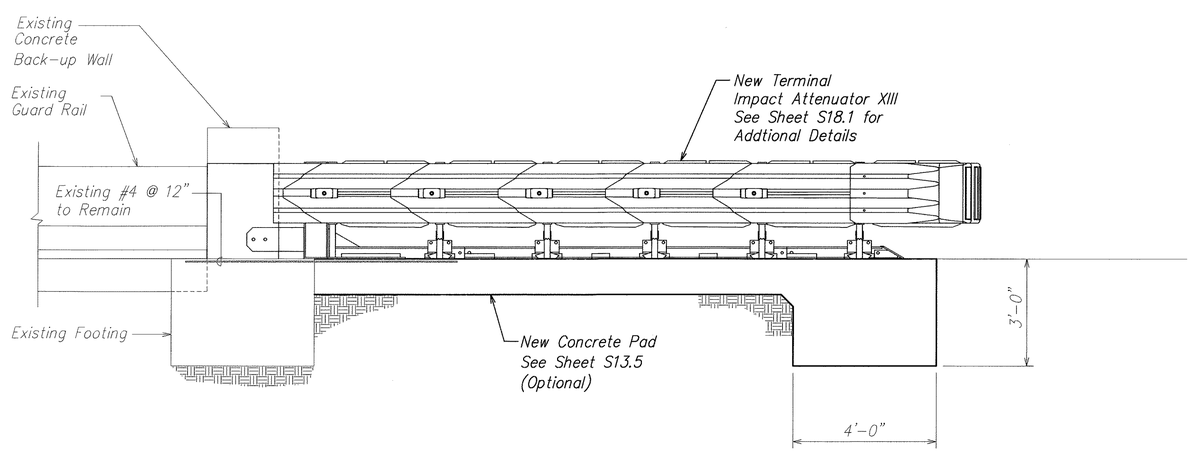

ELEVATION (B) S13.7 S13.7

SCALE: 1/2" = 1'-0"

ORIGINAL PLAN	SURVEY PLOTTED BY	DATE
	DUTY TO PLAN	
	TRACED BY	
NOTE BOOK	DESIGNED BY	
	QUANTITIES BY	
No.	CHECKED BY	

DAVID K. FUJIWARA LICENSED PROFESSIONAL ENGINEER NO. 8104-S HAWAII, U.S.A.

THIS WORK WAS PREPARED BY ME OR UNDER MY SUPERVISION.

SIGNATURE — EXPIRATION DATE OF THE LICENSE 4-30-04

STATE OF HAWAII
DEPARTMENT OF TRANSPORTATION
HIGHWAYS DIVISION

PLAN AND ELEVATION
NIMITZ CONN. WEST BOUND
INTERSTATE ROUTE H-1
GUARDRAIL AND SHOULDER IMPROVEMENTS
Airport Interchange to Middle Street
Federal Aid Project No. IM-H1-1(240)

SCALE: As Noted — DATE: OCTOBER 2003

SHEET No. S13.7 OF 111 SHEETS

FILE: PCGS137.DWG
PLOT: 1 = 1

\\Cad\ksf\2000\0066-H1 GUARDRAIL\11-05-03\PCGS1307.dwg, 11/4/2003 3:38:34 PM, KSFinc.pc3, 1:1

FED. ROAD DIST. NO.	STATE	FED. AID PROJ. NO.	FISCAL YEAR	SHEET NO.	TOTAL SHEETS
HAWAII	HAW.	IM-H1-1(240)	2004	90	143

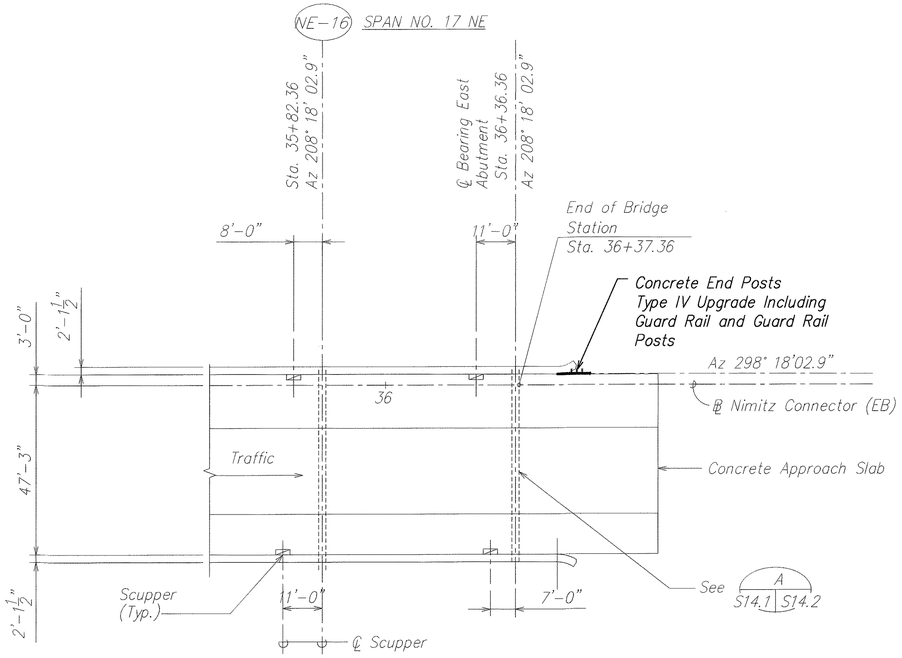

PARTIAL PLAN
NIMITZ CONNECTOR EAST BOUND

SCALE: 1" = 20'-0"

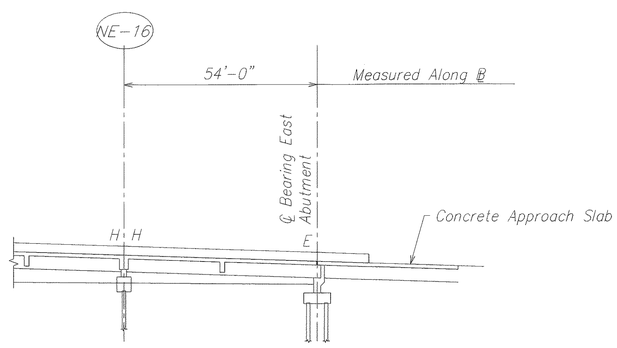

PARTIAL LONGITUDINAL ELEVATION
NIMITZ CONNECTOR EAST BOUND

SCALE: 1" = 20'-0"

ORIGINAL PLAN
NOTE BOOK No.
SURVEY PLOTTED BY
DRAWN BY
TRACED BY
DESIGNED BY
QUANTITIES BY
CHECKED BY
DATE

DAVID K. FUJIWARA
LICENSED PROFESSIONAL ENGINEER
NO. 8104-S
HAWAII, U.S.A.

THIS WORK WAS PREPARED BY ME OR UNDER MY SUPERVISION.

SIGNATURE — EXPIRATION DATE OF THE LICENSE 4-30-04

STATE OF HAWAII
DEPARTMENT OF TRANSPORTATION
HIGHWAYS DIVISION

GENERAL PLAN & ELEVATION
NIMITZ CONNECTOR EAST BOUND
INTERSTATE ROUTE H-1
GUARDRAIL AND SHOULDER IMPROVEMENTS
Airport Interchange to Middle Street
Federal Aid Project No. IM-H1-1(240)

SCALE: As Noted — DATE: OCTOBER 2003

SHEET No. S14.1 OF 111 SHEETS

FILE: PCGS14.DGN
PLOT: 1 = 1

C:\KSF\GUARDRAIL\10-24-03\PCGS1401.dwg, 10/24/2003 10:43:02 AM, KSFinc.pc3, 1:1

FED. ROAD DIST. NO.	STATE	FED. AID PROJ. NO.	FISCAL YEAR	SHEET NO.	TOTAL SHEETS
HAWAII	HAW.	IM-H1-1(240)	2004	91	143

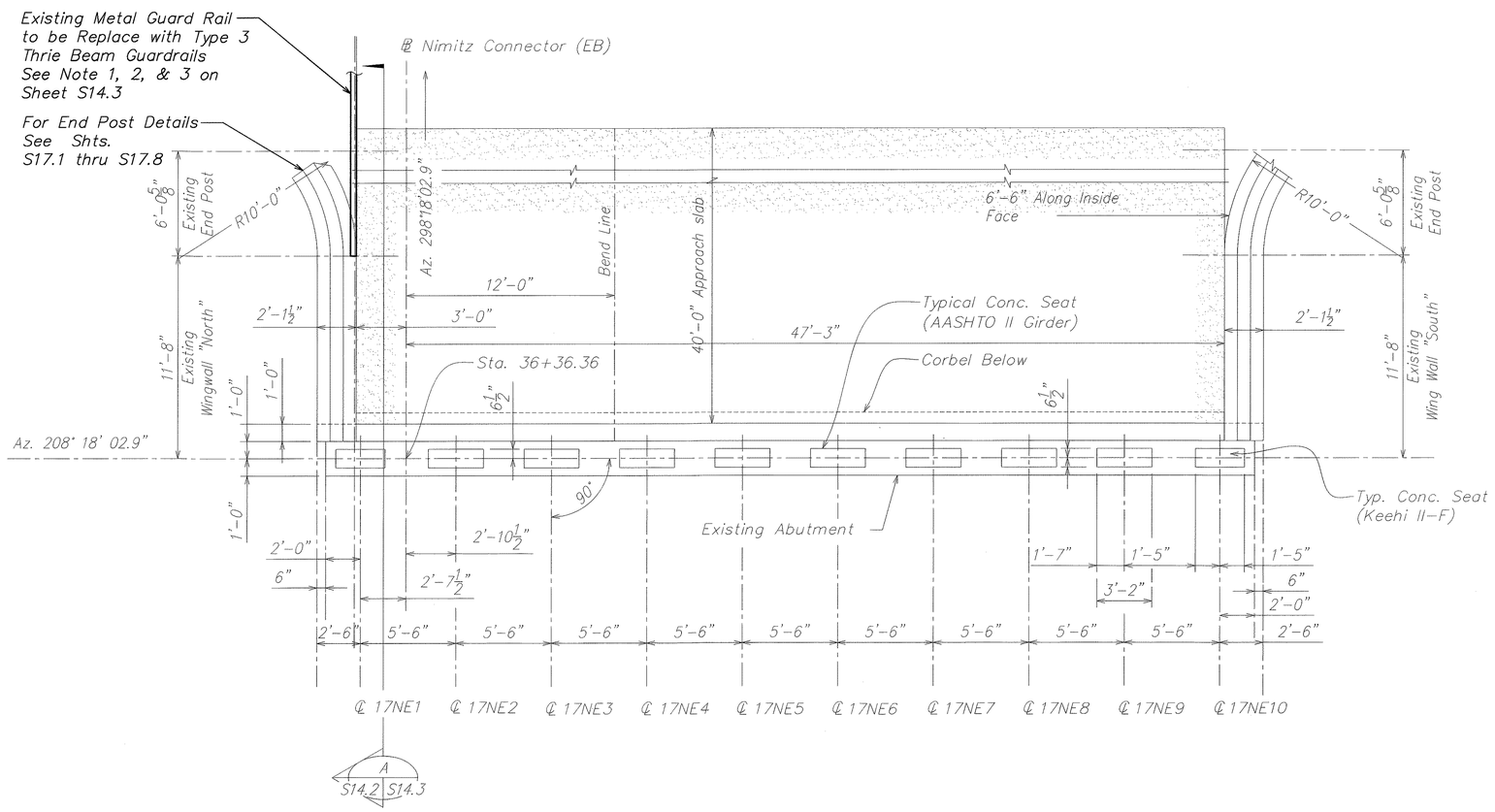

N

PLAN-EAST ABUTMENT-NIMITZ CONNECTOR EAST BOUND

SCALE: 1/4"=1'-0"

A S14.1 | S14.2

ORIGINAL PLAN	SURVEY PLOTTED BY	DATE
	DRAWN BY	
	TRACED BY	
NOTE BOOK	DESIGNED BY	
	QUANTITIES BY	
No.	CHECKED BY	

DAVID K. FUJIWARA LICENSED PROFESSIONAL ENGINEER NO. 8104-S HAWAII, U.S.A.

THIS WORK WAS PREPARED BY ME OR UNDER MY SUPERVISION.

SIGNATURE — EXPIRATION DATE OF THE LICENSE 4-30-04

STATE OF HAWAII
DEPARTMENT OF TRANSPORTATION
HIGHWAYS DIVISION

EAST ABUTMENT PLAN
NIMITZ CONNECTOR EAST BOUND
INTERSTATE ROUTE H-1
GUARDRAIL AND SHOULDER IMPROVEMENTS
Airport Interchange to Middle Street
Federal Aid Project No. IM-H1-1(240)

SCALE: As Noted — DATE: OCTOBER 2003

SHEET No. S14.2 OF 111 SHEETS

FILE: PCG-S14.2.DWG
PLOT: 1 = 1

\\Cad1\ksf\2000\0066-H1 GUARDRAIL\11-05-03\PCGS1402.dwg, 11/5/2003 11:07:29 AM, KSFinc.pc3, 1:1

FED. ROAD DIST. NO.	STATE	FED. AID PROJ. NO.	FISCAL YEAR	SHEET NO.	TOTAL SHEETS
HAWAII	HAW.	IM-H1-1(240)	2004	92	143

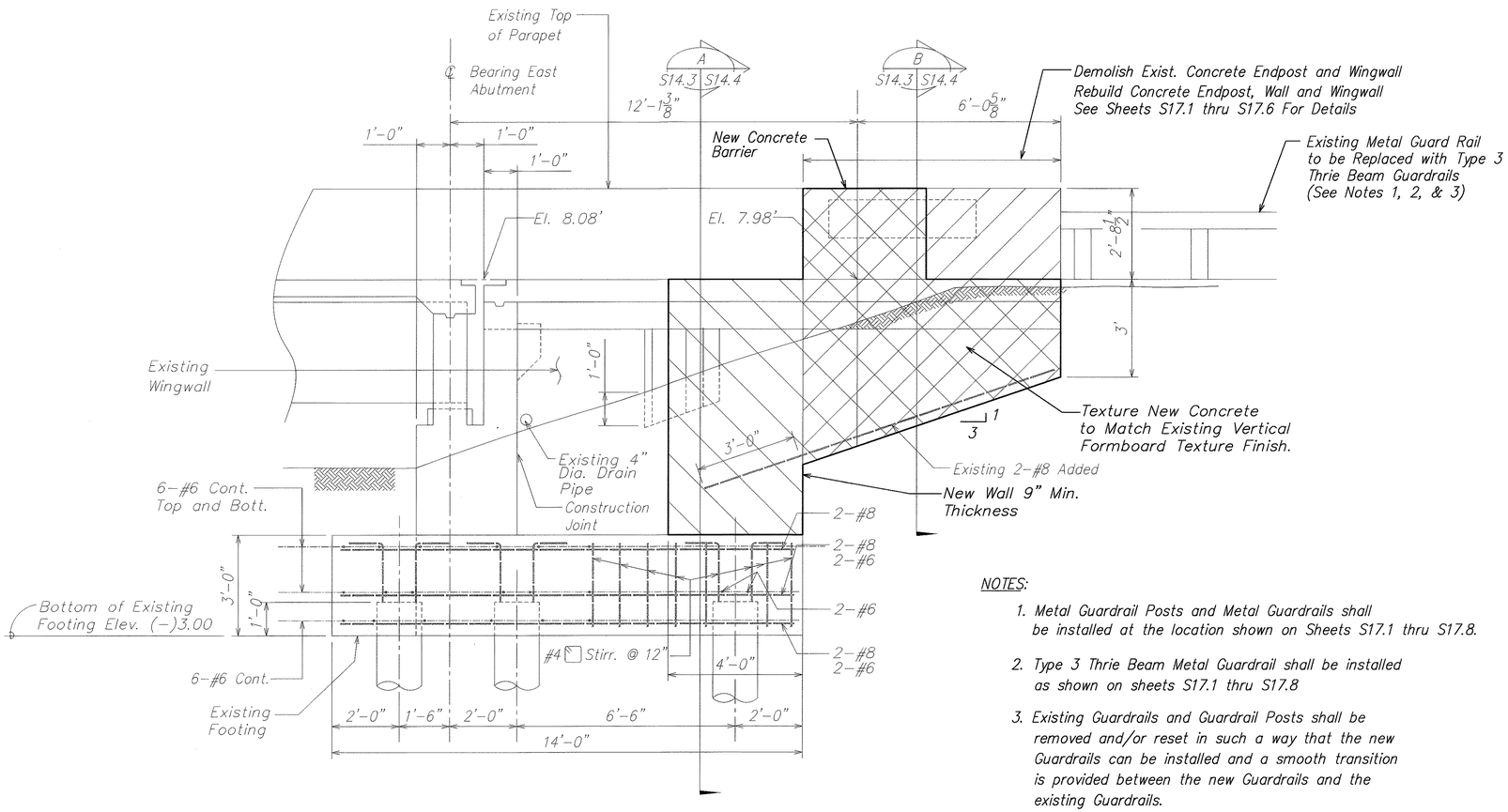

NOTES:

1. Metal Guardrail Posts and Metal Guardrails shall be installed at the location shown on Sheets S17.1 thru S17.8.
2. Type 3 Thrie Beam Metal Guardrail shall be installed as shown on sheets S17.1 thru S17.8
3. Existing Guardrails and Guardrail Posts shall be removed and/or reset in such a way that the new Guardrails can be installed and a smooth transition is provided between the new Guardrails and the existing Guardrails.
4. All reinforcing shown on this sheet are existing rebars.

CONCRETE END POST TYPE IV

A
S14.3 S14.3

SCALE: 1/2"=1'-0"

ORIGINAL PLAN	SURVEY PLOTTED BY	DATE
	DRAWN BY	"
	TRACED BY	"
NOTE BOOK	DESIGNED BY	"
	QUANTITIES BY	"
No.	CHECKED BY	"

DAVID K. FUJIWARA
LICENSED PROFESSIONAL ENGINEER
NO. 8104-S
HAWAII, U.S.A.

THIS WORK WAS PREPARED BY ME OR UNDER MY SUPERVISION.

SIGNATURE — EXPIRATION DATE OF THE LICENSE 4-30-04

STATE OF HAWAII
DEPARTMENT OF TRANSPORTATION
HIGHWAYS DIVISION

CONCRETE END POST
NIMITZ CONNECTOR EAST BOUND
INTERSTATE ROUTE H-1
GUARDRAIL AND SHOULDER IMPROVEMENTS
Airport Interchange to Middle Street
Federal Aid Project No. IM-H1-1(240)

SCALE: As Noted — DATE: OCTOBER 2003

SHEET No. S14.3 OF 111 SHEETS

FILE: CONCRETE END POST
PLOT: 1 = 1

C:\KSF\GUARDRAIL\10-24-03\PCGS1402.dwg, 10/24/2003 10:44:17 AM, KSFinc.pc3, 1:1

FED. ROAD DIST. NO.	STATE	FED. AID PROJ. NO.	FISCAL YEAR	SHEET NO.	TOTAL SHEETS
HAWAII	HAW.	IM-H1-1(240)	2004	93	143

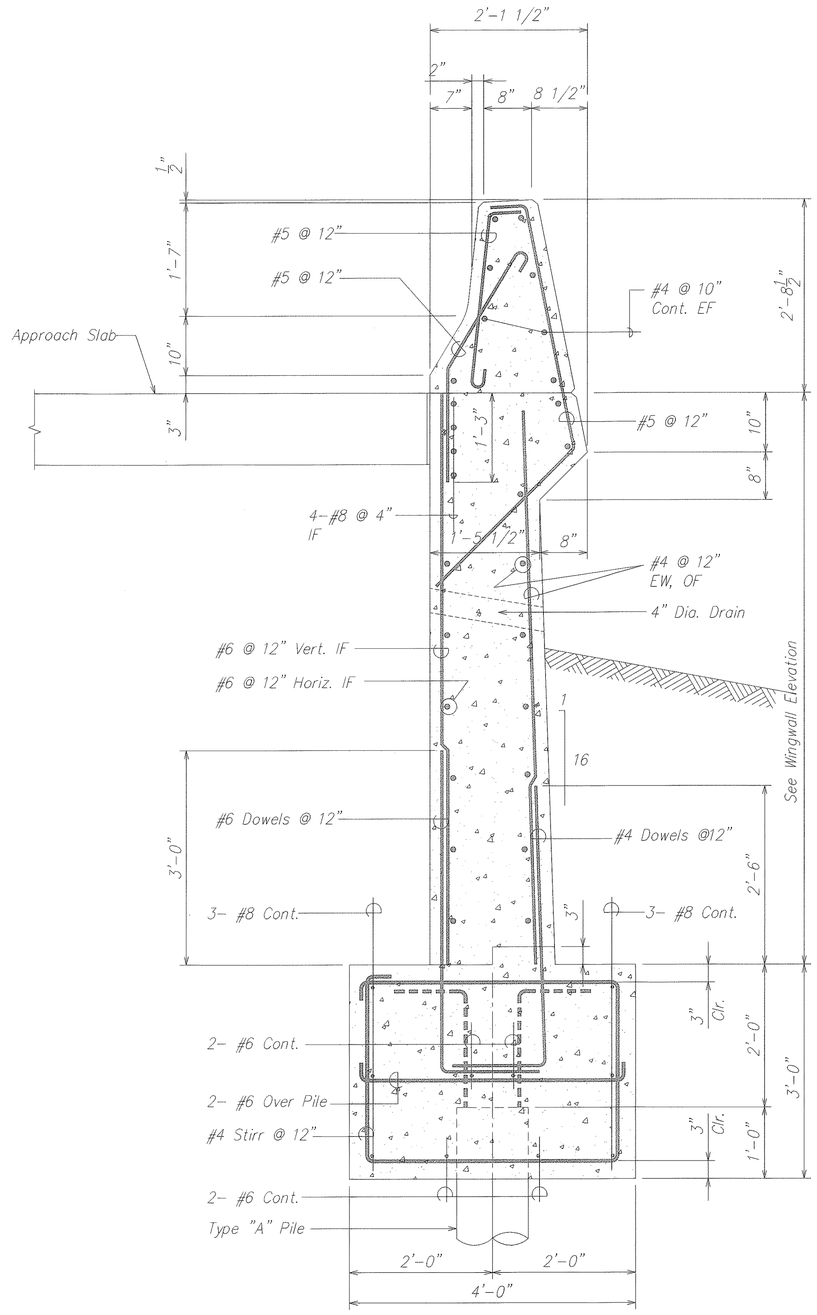

EXISTING WINGWALL SECTION (A)
SCALE: 1" = 1'-0"
S14.3 | S14.4

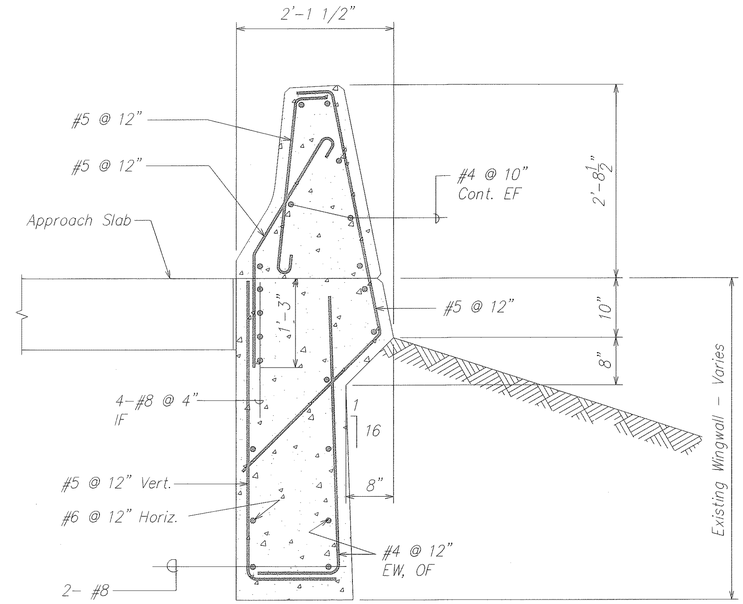

EXISTING CANTILEVER WINGWALL SECTION (B)
SCALE: 1" = 1'-0"
S14.3 | S14.4

WING WALL NOTES:

1. All reinforcing steel except stirrups shall be grade 60.
2. Concrete strength @ 28 days, fc = 3,000 psi.
3. All reinforcing shown on this sheet are existing rebars.

DAVID K. FUJIWARA
LICENSED PROFESSIONAL ENGINEER
NO. 8104-S
HAWAII, U.S.A.

THIS WORK WAS PREPARED BY ME OR UNDER MY SUPERVISION.

SIGNATURE — EXPIRATION DATE OF THE LICENSE 4-30-04

STATE OF HAWAII
DEPARTMENT OF TRANSPORTATION
HIGHWAYS DIVISION

SECTIONS
NIMITZ CONNECTOR EAST BOUND
INTERSTATE ROUTE H-1
GUARDRAIL AND SHOULDER IMPROVEMENTS
Airport Interchange to Middle Street
Federal Aid Project No. IM-H1-1(240)

SCALE: As Noted — DATE: OCTOBER 2003

SHEET No. S14.4 OF 111 SHEETS

ORIGINAL PLAN	SURVEY PLOTTED BY	DATE
NOTE BOOK	DRAWN BY	
	TRACED BY	
	DESIGNED BY	
No.	QUANTITIES BY	
	CHECKED BY	

FILE: PCGS144.DWG
PLOT: 1 = 1

C:\KSF\GUARDRAIL\10-24-03\PCGS1404.dwg, 10/24/2003 10:44:56 AM, KSFinc.pc3, 1:1

FED. ROAD DIST. NO.	STATE	FED. AID PROJ. NO.	FISCAL YEAR	SHEET NO.	TOTAL SHEETS
HAWAII	HAW.	IM-H1-1(240)	2004	94	143

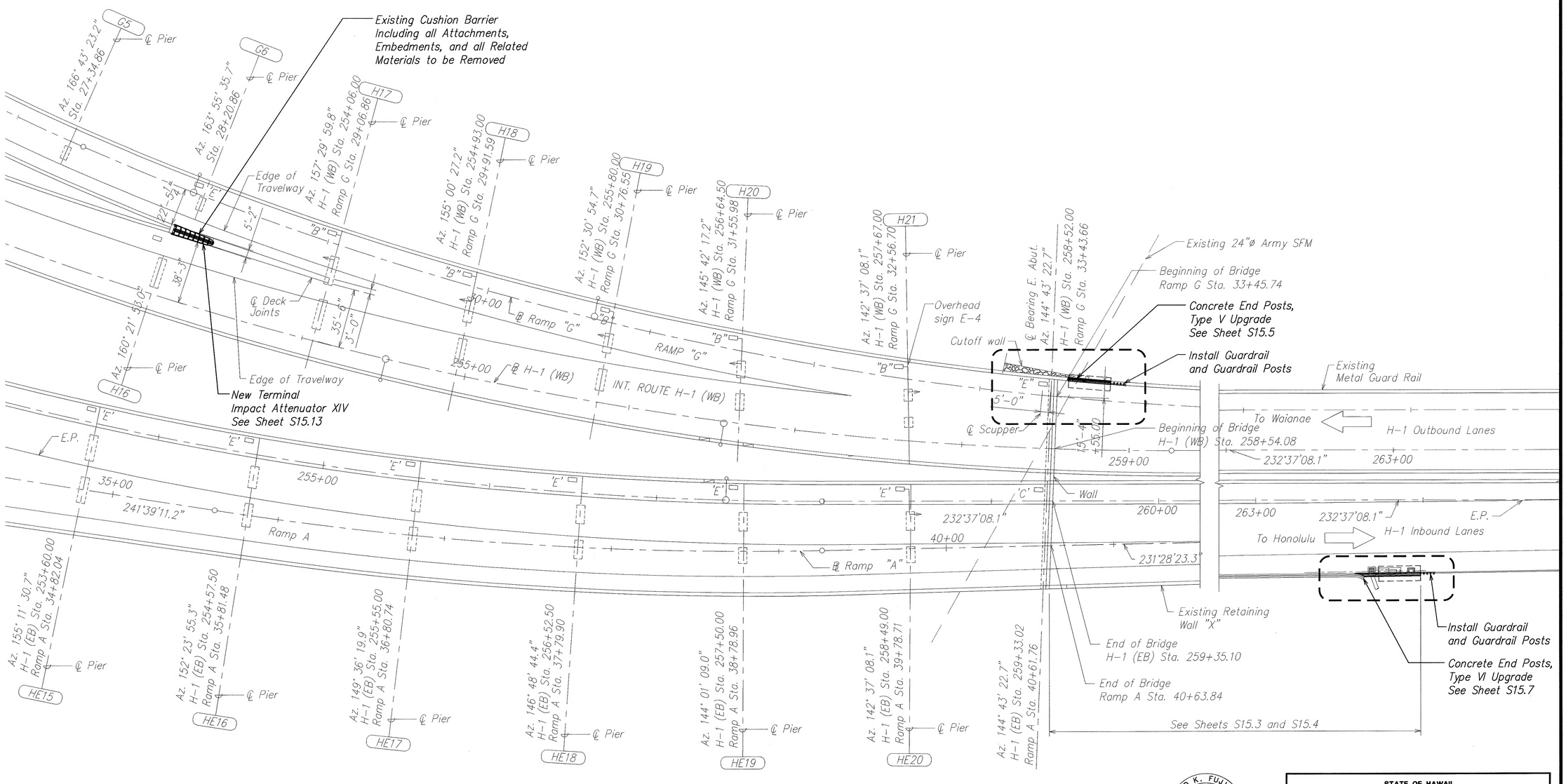

PLAN – INT. ROUTE H-1 (EB) & (WB) RAMP A & RAMP B

SCALE: 1" – 30'-0"

ORIGINAL PLAN	SURVEY PLOTTED BY:	DATE:
	DRAWN BY:	
NOTE BOOK	TRACED BY:	
	DESIGNED BY:	
No.	QUANTITIES BY:	
	CHECKED BY:	

DAVID K. FUJIWARA LICENSED PROFESSIONAL ENGINEER NO. 8104-S HAWAII, U.S.A.

THIS WORK WAS PREPARED BY ME OR UNDER MY SUPERVISION.

SIGNATURE — EXPIRATION DATE OF THE LICENSE 4-30-04

STATE OF HAWAII
DEPARTMENT OF TRANSPORTATION
HIGHWAYS DIVISION

GENERAL PLAN
KEEHI INTERCHANGE
INTERSTATE ROUTE H-1
GUARDRAIL AND SHOULDER IMPROVEMENTS
Airport Interchange to Middle Street
Federal Aid Project No. IM-H1-1(240)

SCALE: As Noted — DATE: OCTOBER 2003

SHEET No. S15.1 OF 111 SHEETS

FILE: PCGS151.DWG
PLOT: 1 = 1

C:\KSF\GUARDRAIL\10-24-03\PCGS1501.dwg, 10/24/2003 10:45:40 AM, KSFinc.pc3, 1:1

FED. ROAD DIST. NO.	STATE	FED. AID PROJ. NO.	FISCAL YEAR	SHEET NO.	TOTAL SHEETS
HAWAII	HAW.	IM-H1-1(240)	2004	95	143

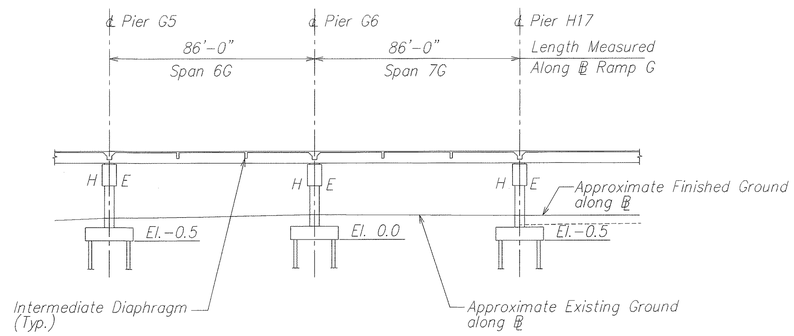

LONGITUDINAL SECTION – RAMP G (Taken at Baseline)

SCALE: 1" = 30'

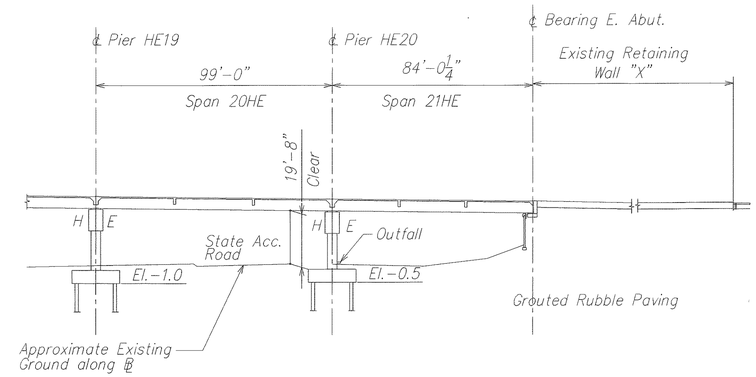

LONGITUDINAL SECTION – INT. ROUTE H-1 (EB) (Taken at Baseline)

SCALE: 1" = 30'

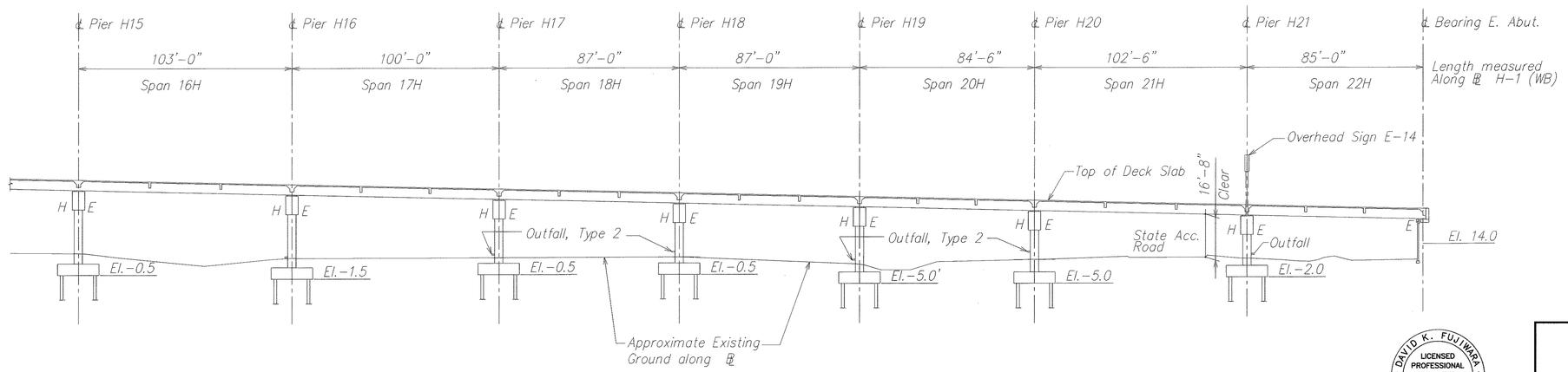

LONGITUDINAL SECTION – INT. ROUTE H-1 (WB) (Taken at Baseline)

SCALE: 1" = 30'

ORIGINAL PLAN	SURVEY PLOTTED BY	DATE
	DRAWN BY	
NOTE BOOK	TRACED BY	
	DESIGNED BY	
	QUANTITIES BY	
No.	CHECKED BY	

DAVID K. FUJIWARA
LICENSED PROFESSIONAL ENGINEER
NO. 8104-S
HAWAII, U.S.A.

THIS WORK WAS PREPARED BY ME OR UNDER MY SUPERVISION.

SIGNATURE — EXPIRATION DATE OF THE LICENSE 4-30-04

STATE OF HAWAII
DEPARTMENT OF TRANSPORTATION
HIGHWAYS DIVISION

LONGITUDINAL SECTIONS
KEEHI INTERCHANGE
INTERSTATE ROUTE H-1
GUARDRAIL AND SHOULDER IMPROVEMENTS
Airport Interchange to Middle Street
Federal Aid Project No. IM-H1-1(240)

SCALE: As Noted — DATE: OCTOBER 2003

SHEET No. S15.2 OF 111 SHEETS

FILE: PCOS152.DWG
PLOT: 1 = 1

C:\KSF\GUARDRAIL\10-24-03\PCOS1502.dwg, 10/24/2003 10:46:23 AM, KSFinc.pc3, 1:1

FED. ROAD DIST. NO.	STATE	FED. AID PROJ. NO.	FISCAL YEAR	SHEET NO.	TOTAL SHEETS
HAWAII	HAW.	IM-H1-1(240)	2004	96	143

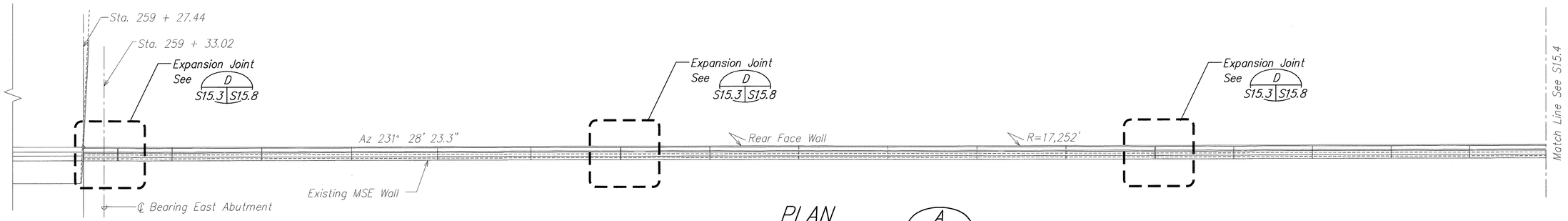

PLAN (A) S15.3 S15.3
SCALE: 1/8" = 1'-0"

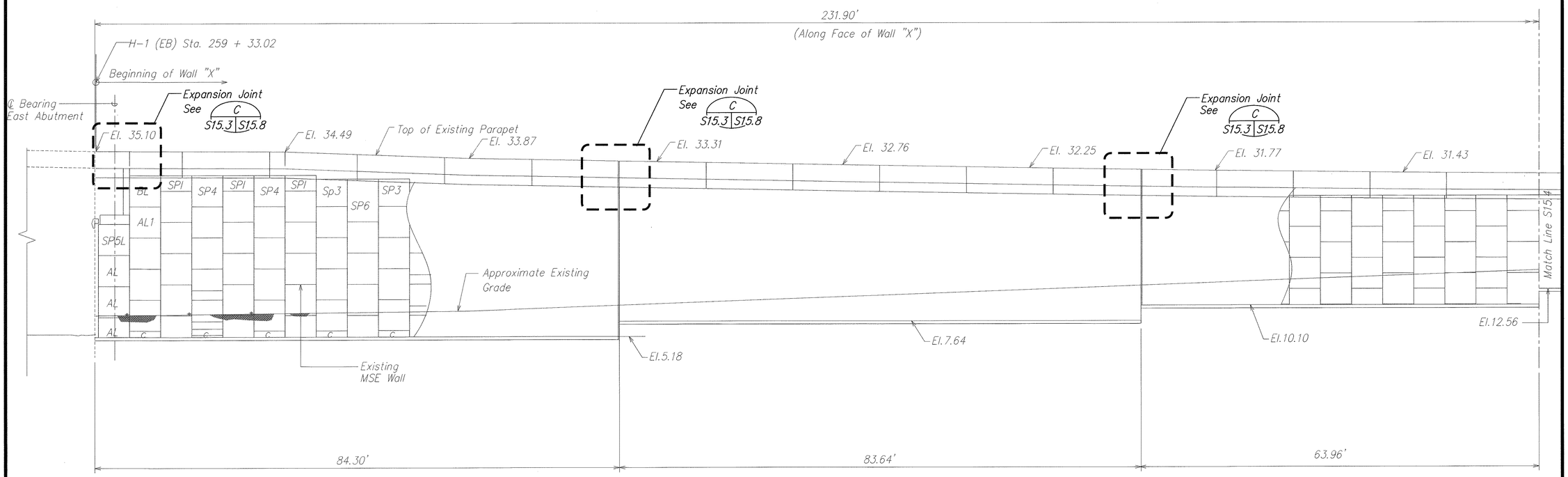

ELEVATION (B) S15.3 S15.3
SCALE: 1/8" = 1'-0"

ORIGINAL PLAN	SURVEY PLOTTED BY	DATE
	DRAWN BY	
NOTE BOOK	TRACED BY	
	DESIGNED BY	
	QUANTITIES BY	
No.	CHECKED BY	

DAVID K. FUJIWARA
LICENSED PROFESSIONAL ENGINEER
NO. 8104-S
HAWAII, U.S.A.

THIS WORK WAS PREPARED BY ME OR UNDER MY SUPERVISION.

SIGNATURE — EXPIRATION DATE OF THE LICENSE 4-30-04

STATE OF HAWAII
DEPARTMENT OF TRANSPORTATION
HIGHWAYS DIVISION

PLAN & ELEVATION
KEEHI INTERCHANGE
INTERSTATE ROUTE H-1
GUARDRAIL AND SHOULDER IMPROVEMENTS
Airport Interchange to Middle Street
Federal Aid Project No. IM-H1-1(240)

SCALE: As Noted — DATE: OCTOBER 2003

SHEET No. S15.3 OF 111 SHEETS

FILE: PCGS153.DWG
PLOT: 1 = 1

C:\KSF\GUARDRAIL\10-24-03\PCGS153.dwg, 10/24/2003 10:47:24 AM, KSFinc.pc3, 1:1

FED. ROAD DIST. NO.	STATE	FED. AID PROJ. NO.	FISCAL YEAR	SHEET NO.	TOTAL SHEETS
HAWAII	HAW.	IM-H1-1(240)	2004	ADD. 97	143

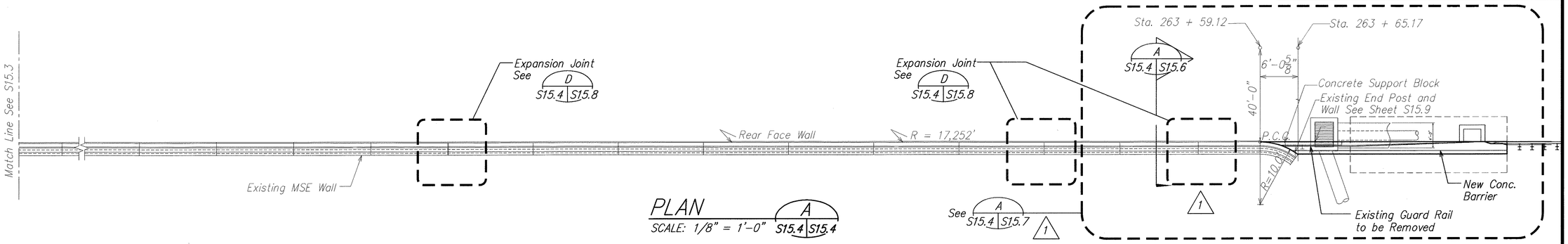

PLAN A S15.4 S15.4
SCALE: 1/8" = 1'-0"

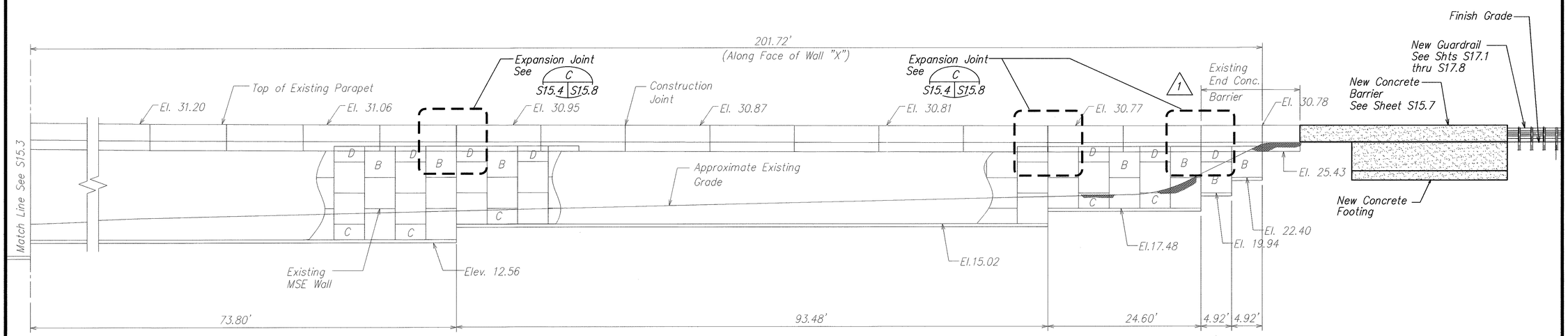

ELEVATION B S15.4 S15.4
SCALE: 1/8" = 1'-0"

DATE	REVISION
12/09/03	1 Revise Section Cut

DAVID K. FUJIWARA
LICENSED PROFESSIONAL ENGINEER
NO. 8104-S
HAWAII, U.S.A.

THIS WORK WAS PREPARED BY ME OR UNDER MY SUPERVISION.

David K. Fujiwara 4-30-04
SIGNATURE EXPIRATION DATE OF THE LICENSE

STATE OF HAWAII
DEPARTMENT OF TRANSPORTATION
HIGHWAYS DIVISION

PLAN & ELEVATION
KEEHI INTERCHANGE
INTERSTATE ROUTE H-1
GUARDRAIL AND SHOULDER IMPROVEMENTS
Airport Interchange to Middle Street
Federal Aid Project No. IM-H1-1(240)

SCALE: As Noted DATE: OCTOBER 2003

SHEET No. S15.4 OF 111 SHEETS

ADD. 97

ORIGINAL PLAN	SURVEY PLOTTED BY	DATE
	DRAWN BY	
NOTE BOOK	TRACED BY	
	DESIGNED BY	
	QUANTITIES BY	
No.	CHECKED BY	

FILE: PCGS154.DWG
PLOT: 1 = 1

\\Cad1\kst\2000\0066-H1 GUARDRAIL\12-08-03 ADD1\A001 PCGS1503.dwg, 12/8/2003 9:17:21 AM, KSFinc.pc3, 1:1

FED. ROAD DIST. NO.	STATE	FED. AID PROJ. NO.	FISCAL YEAR	SHEET NO.	TOTAL SHEETS
HAWAII	HAW.	IM-H1-1(240)	2004	98	143

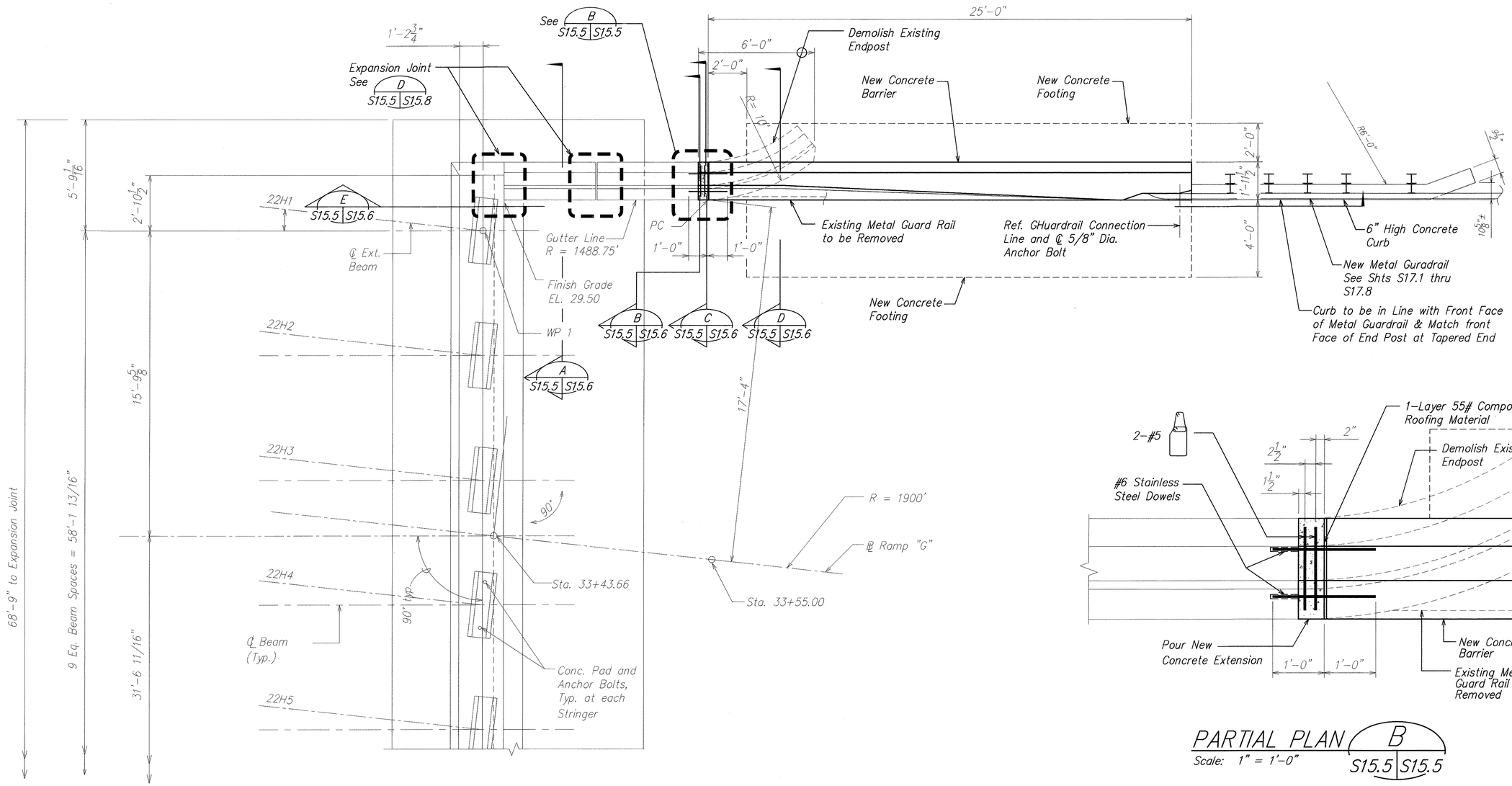

CONCRETE END POST TYPE V PLAN (A / S15.5 | S15.5)

Scale: 3/8" = 1'-0"

PARTIAL PLAN (B / S15.5 | S15.5)

Scale: 1" = 1'-0"

ORIGINAL PLAN	SURVEY PLOTTED BY	DATE
	DRAWN BY	
	TRACED BY	
NOTE BOOK	DESIGNED BY	
	QUANTITIES BY	
No.	CHECKED BY	

DAVID K. FUJIWARA LICENSED PROFESSIONAL ENGINEER NO. 8104-S HAWAII, U.S.A.

THIS WORK WAS PREPARED BY ME OR UNDER MY SUPERVISION.

SIGNATURE — EXPIRATION DATE OF THE LICENSE 4-30-04

STATE OF HAWAII
DEPARTMENT OF TRANSPORTATION
HIGHWAYS DIVISION

PLAN
KEEHI INTERCHANGE
INTERSTATE ROUTE H-1
GUARDRAIL AND SHOULDER IMPROVEMENTS
Airport Interchange to Middle Street
Federal Aid Project No. IM-H1-1(240)

SCALE: As Noted — DATE: OCTOBER 2003

SHEET No. S15.5 OF 111 SHEETS

FILE: PCGS155.DWG
PLOT: 1 = 1

\\Cad1\xsf\2000\0066-H1 GUARDRAIL\11-05-03\PCGS1505.dwg, 11/5/2003 11:10:54 AM, KSFinc.pc3, 1:1

FED. ROAD DIST. NO.	STATE	FED. AID PROJ. NO.	FISCAL YEAR	SHEET NO.	TOTAL SHEETS
HAWAII	HAW.	IM-H1-1(240)	2004	99	143

NOTE:
All reinforcing shown is existing.

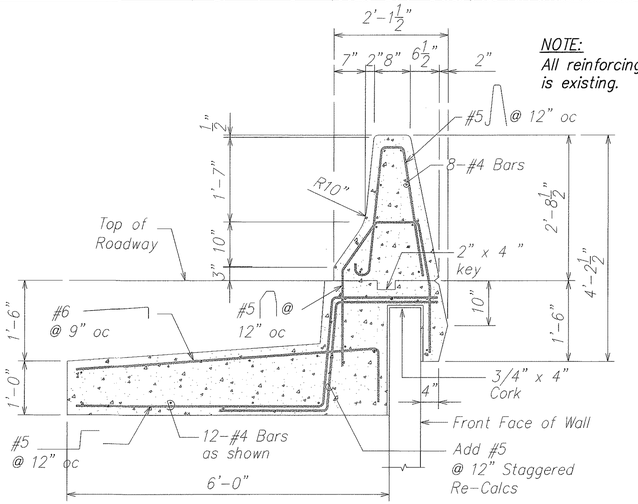

EXISTING CONCRETE BARRIER SECTION (A)

SCALE: 3/4" = 1'-0"

S15.4 | S15.6 | S15.5

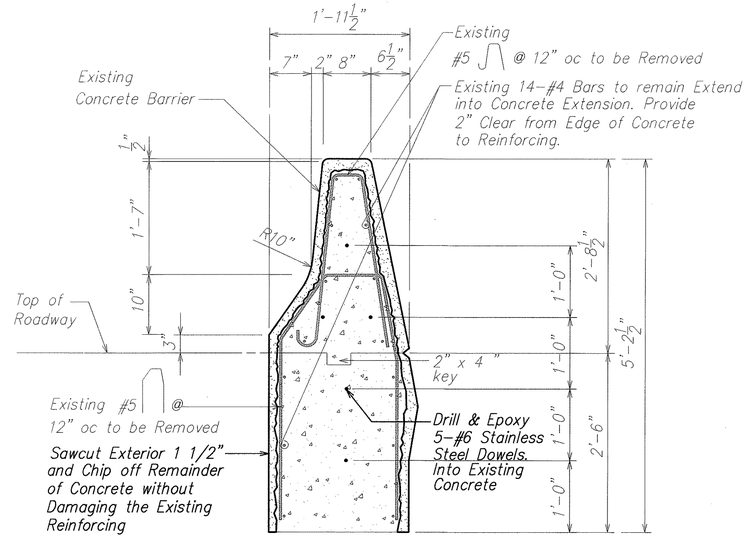

EXISTING SECTION TO BE DEMOLISHED (B)

SCALE: 1" = 1'-0"

S15.5 | S15.6

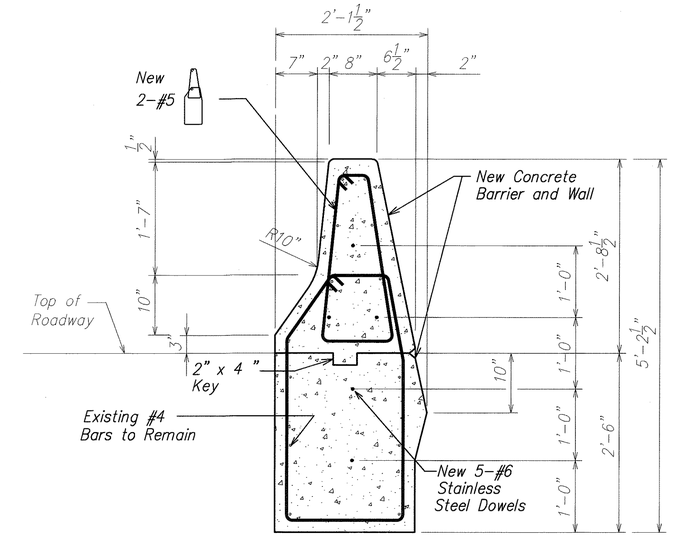

NEW CONCRETE EXTENSION SECTION (C)

SCALE: 1" = 1'-0"

S15.5 | S15.6

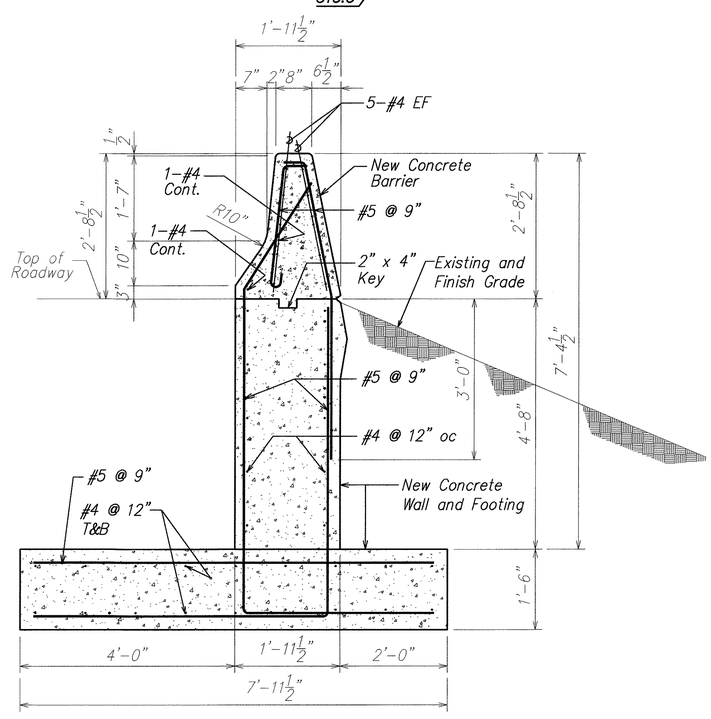

SECTION (D)

SCALE: 3/4" = 1'-0"

S15.5 | S15.6

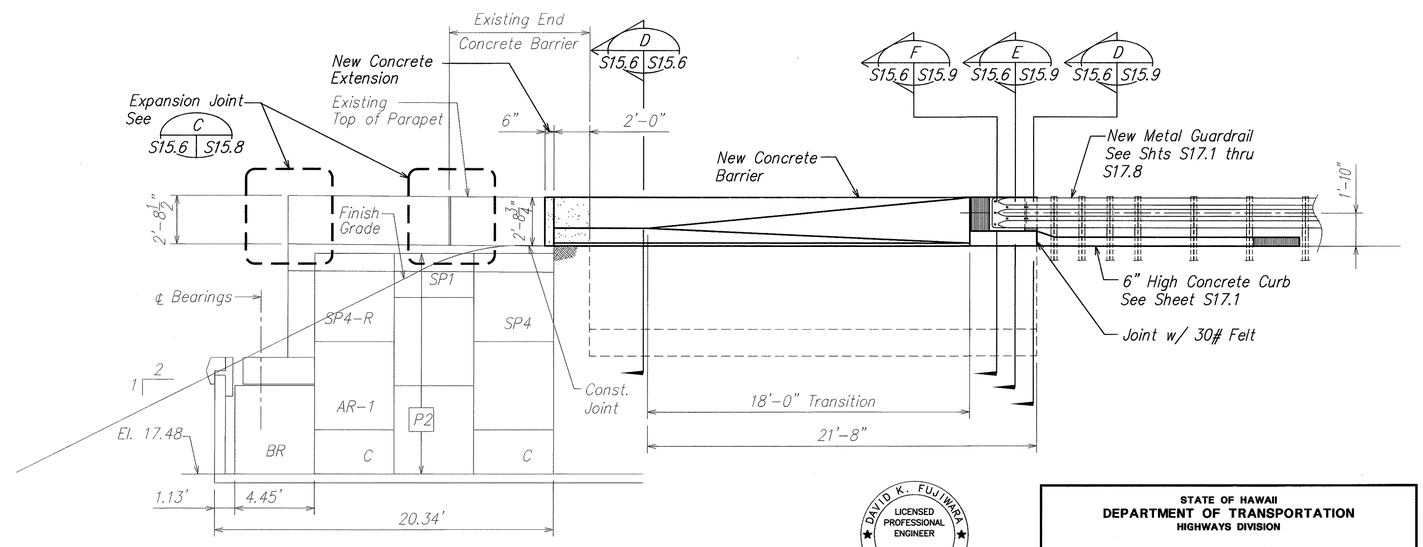

ELEVATION (E)

SCALE: 1/4" = 1'-0"

S15.5 | S15.6

DAVID K. FUJIWARA
LICENSED PROFESSIONAL ENGINEER
NO. 8104-S
HAWAII, U.S.A.

THIS WORK WAS PREPARED BY ME OR UNDER MY SUPERVISION.

SIGNATURE — EXPIRATION DATE OF THE LICENSE 4-30-04

STATE OF HAWAII
DEPARTMENT OF TRANSPORTATION
HIGHWAYS DIVISION

SECTIONS
KEEHI INTERCHANGE
INTERSTATE ROUTE H-1
GUARDRAIL AND SHOULDER IMPROVEMENTS
Airport Interchange to Middle Street
Federal Aid Project No. IM-H1-1(240)

SCALE: As Noted — DATE: OCTOBER 2003

SHEET No. S15.6 OF 111 SHEETS

ORIGINAL PLAN | SURVEY PLOTTED BY | DRAWN BY | TRACED BY | DESIGNED BY | QUANTITIES BY | CHECKED BY | DATE | NOTE BOOK No.

FILE: PCGS156.DWG
PLOT: 1 = 1

\\Cad1\ksf\2000\0066-H1 GUARDRAIL\11-05-03\PCGS1506.dwg, 11/5/2003 11:12:49 AM, KSFinc.pc3, 1:1

FED. ROAD DIST. NO.	STATE	FED. AID PROJ. NO.	FISCAL YEAR	SHEET NO.	TOTAL SHEETS
HAWAII	HAW.	IM-H1-1(240)	2004	100	143

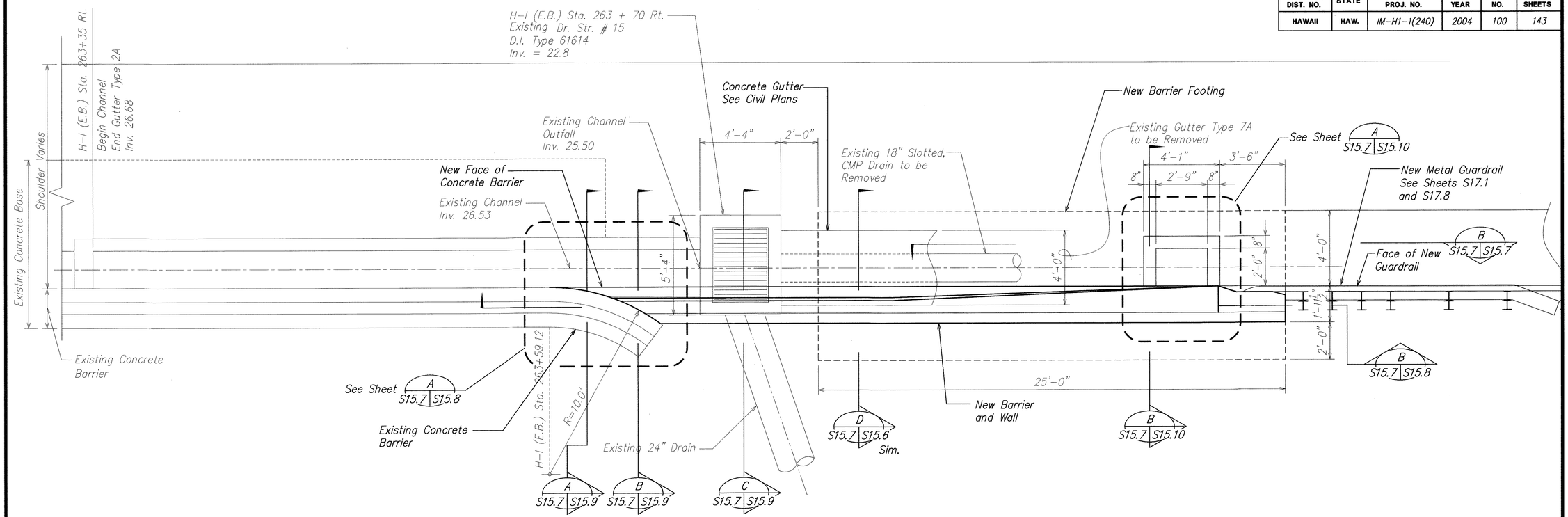

CONCRETE END POST TYPE VI PLAN (A S15.7 S15.7)

SCALE: 3/8" = 1'-0"

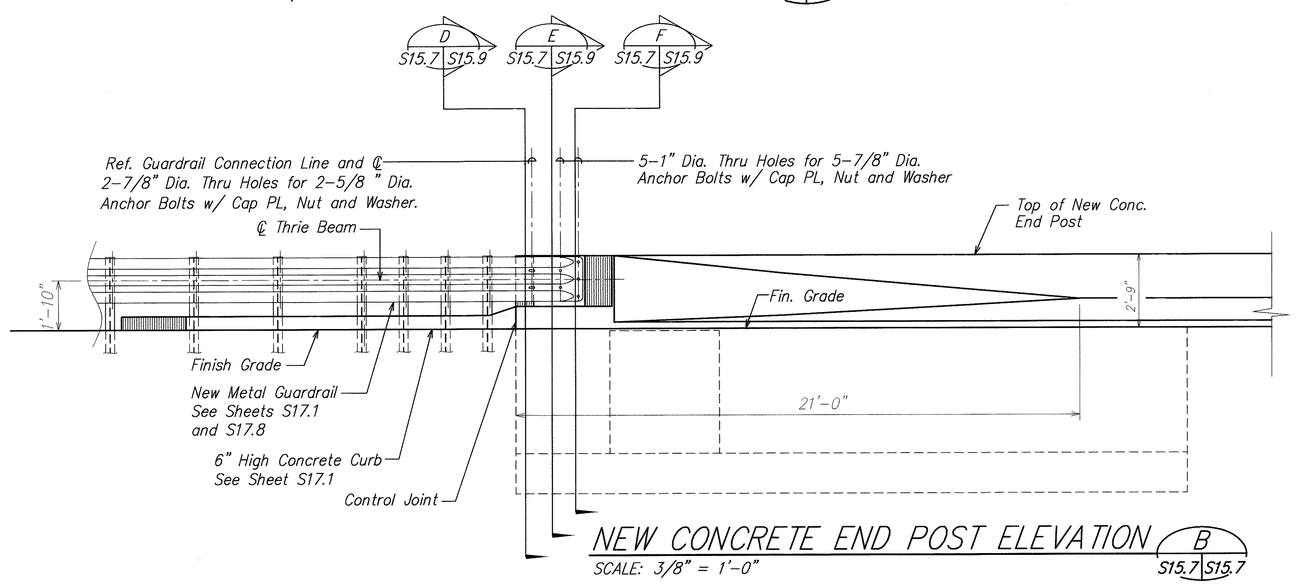

NEW CONCRETE END POST ELEVATION (B S15.7 S15.7)

SCALE: 3/8" = 1'-0"

ORIGINAL PLAN	SURVEY PLOTTED BY	DATE
	DRAWN BY	
NOTE BOOK	TRACED BY	
	DESIGNED BY	
	QUANTITIES BY	
No.	CHECKED BY	

DAVID K. FUJIWARA
LICENSED PROFESSIONAL ENGINEER
NO. 8104-S
HAWAII, U.S.A.

THIS WORK WAS PREPARED BY ME OR UNDER MY SUPERVISION.

SIGNATURE — EXPIRATION DATE OF THE LICENSE 4-30-04

STATE OF HAWAII
DEPARTMENT OF TRANSPORTATION
HIGHWAYS DIVISION

PLAN
KEEHI INTERCHANGE
INTERSTATE ROUTE H-1
GUARDRAIL AND SHOULDER IMPROVEMENTS
Airport Interchange to Middle Street
Federal Aid Project No. IM-H1-1(240)

SCALE: As Noted — DATE: OCTOBER 2003

SHEET No. S15.7 OF 111 SHEETS

FILE: PCGS157.DWG
PLOT: 1 = 1

\\C:\od1\ksf\2000\0066-H1 GUARDRAIL\11-05-03\PCGS1507.dwg, 11/5/2003 11:14:22 AM, KSFinc.pc3, 1:1

FED. ROAD DIST. NO.	STATE	FED. AID PROJ. NO.	FISCAL YEAR	SHEET NO.	TOTAL SHEETS
HAWAII	HAW.	IM-H1-1(240)	2004	101	143

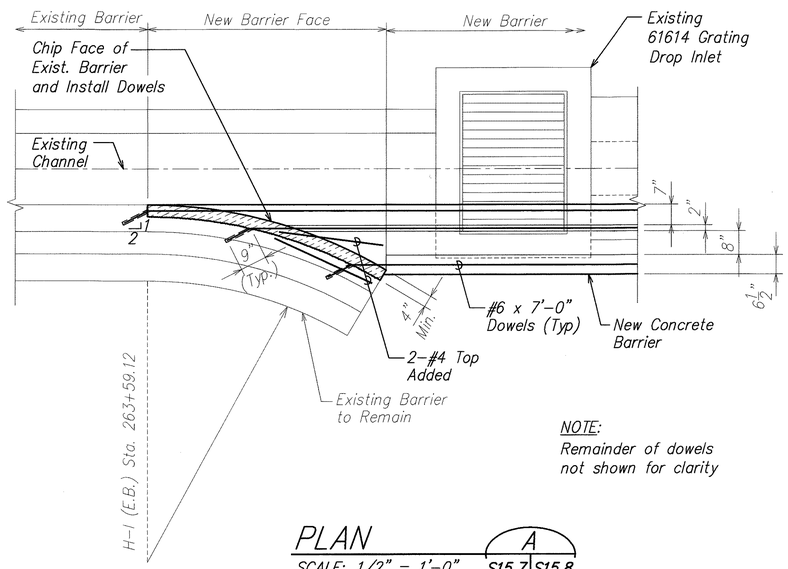

NOTE:
Remainder of dowels not shown for clarity

PLAN (A) S15.7 | S15.8
SCALE: 1/2" = 1'-0"

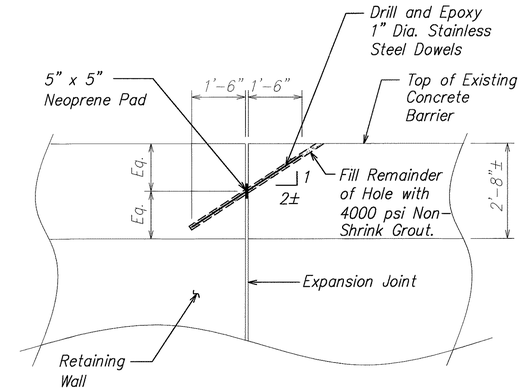

ELEVATION (C) S15.3 | S15.8 | S15.4, S15.6
SCALE: 1/2" = 1'-0"

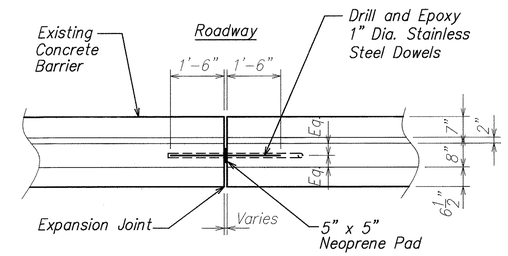

PLAN (D) S15.3 | S15.8 | S15.4, S15.5
SCALE: 1/2" = 1'-0"

NOTES:
1. Neoprene pad thickness shall be such that it fits snugly in the expansion joint.
2. A hole shall be drilled thru the neoprene pad such that the dowel and the epoxy can be inserted thru the hole and the epoxy contained within the drilled hole.

NOTES:
1. Guardrail not shown for clarity.
2. Some reinforcing not shown for clarity.

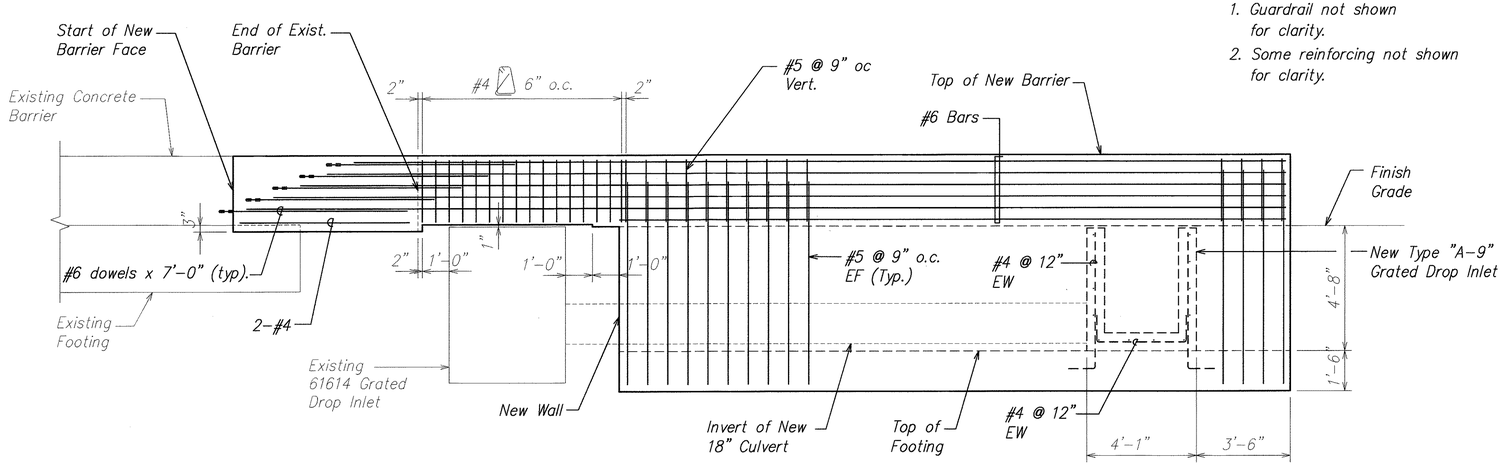

SECTION (B) S15.7 | S15.8
SCALE: 3/8" = 1'-0"

ORIGINAL PLAN	SURVEY PLOTTED BY	DATE
	DRAWN BY	
NOTE BOOK	TRACED BY	
	DESIGNED BY	
No.	QUANTITIES BY	
	CHECKED BY	

THIS WORK WAS PREPARED BY ME OR UNDER MY SUPERVISION.

DAVID K. FUJIWARA — LICENSED PROFESSIONAL ENGINEER — NO. 8104-S — HAWAII, U.S.A.

SIGNATURE — EXPIRATION DATE OF THE LICENSE: 4-30-04

STATE OF HAWAII
DEPARTMENT OF TRANSPORTATION
HIGHWAYS DIVISION

PLAN, ELEVATION & SECTION
KEEHI INTERCHANGE
INTERSTATE ROUTE H-1
GUARDRAIL AND SHOULDER IMPROVEMENTS
Airport Interchange to Middle Street
Federal Aid Project No. IM-H1-1(240)

SCALE: As Noted — DATE: OCTOBER 2003

SHEET No. S15.8 OF 111 SHEETS

FILE: PCGS1510.DWG
PLOT: 1 = 1

\C:cd1\kes\2000\0066-H1 GUARDRAIL\11-05-03\PCGS1507.dwg, 11/5/2003 11:15:39 AM, KSFinc.pc3, 1:1

FED. ROAD DIST. NO.	STATE	FED. AID PROJ. NO.	FISCAL YEAR	SHEET NO.	TOTAL SHEETS
HAWAII	HAW.	IM-H1-1(240)	2004	ADD. 102	143

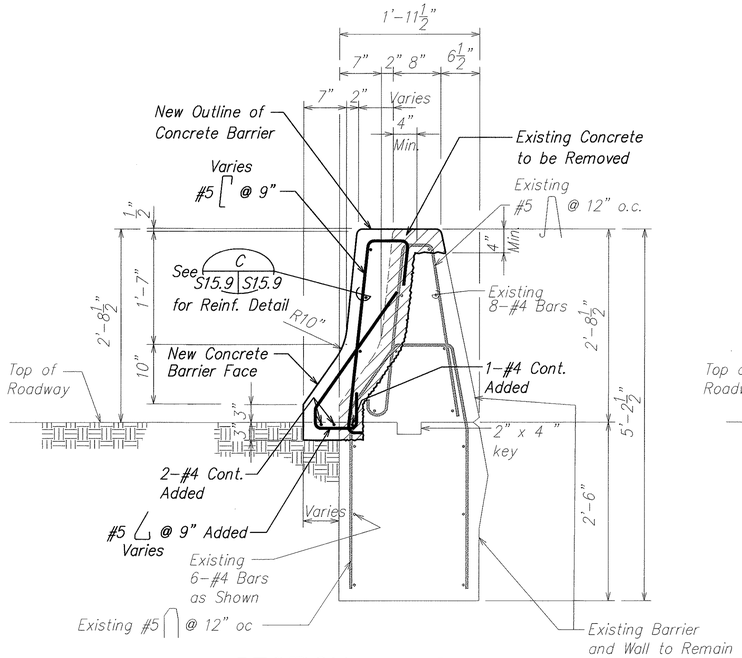

SECTION A
SCALE: 1" = 1'-0" S15.7 S15.9

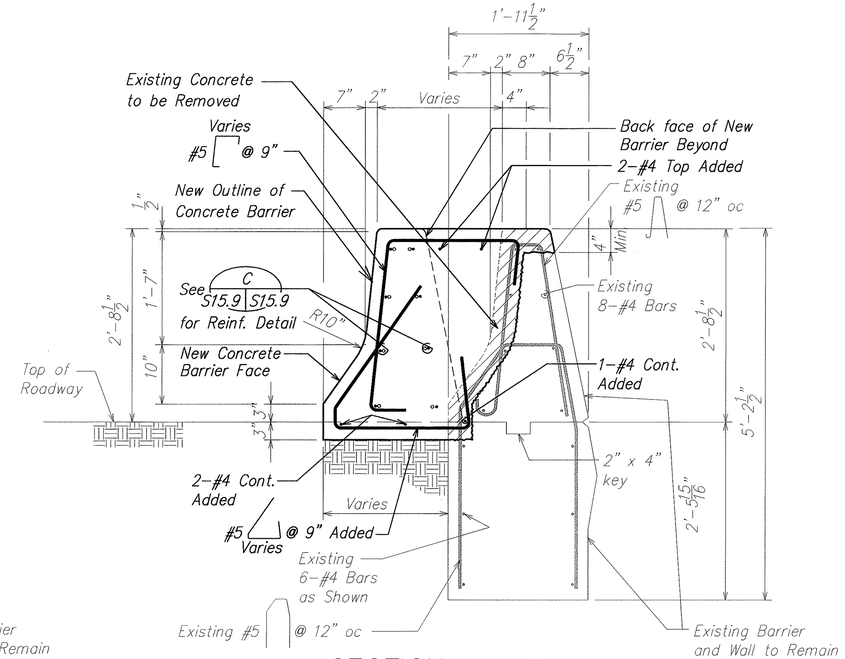

SECTION B
SCALE: 1" = 1'-0" S15.7 S15.9

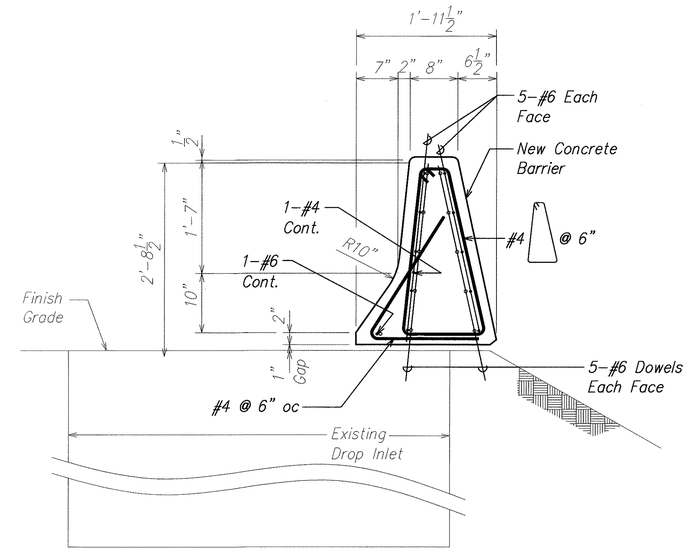

SECTION C
SCALE: 1" = 1'-0" S15.7 S15.9

NOTES:

1. All existing reinforcing is to remain and shall not be damaged in any way.
2. New portions of railing poured against the soil shall bear on firm undisturbed soil.

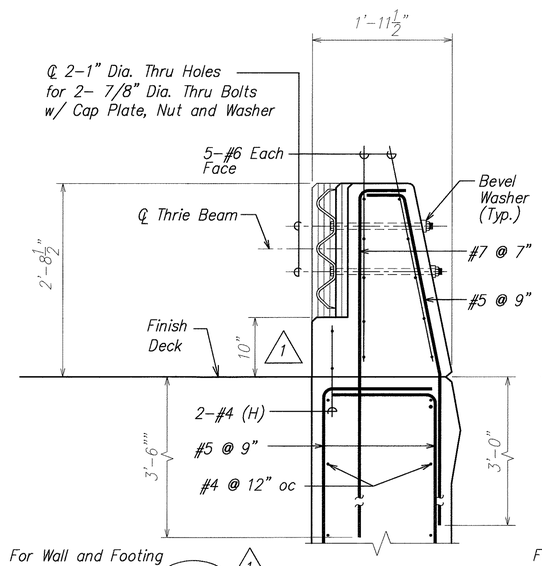

SECTION D
SCALE: 1" = 1'-0" S15.6 S15.9

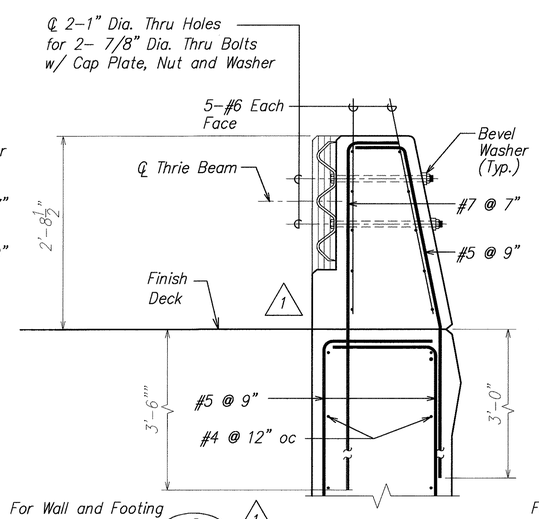

SECTION E
SCALE: 1" = 1'-0" S15.6 S15.9

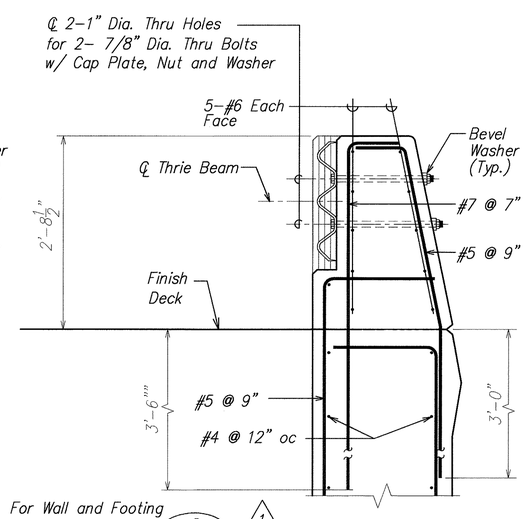

SECTION F
SCALE: 1" = 1'-0" S15.6 S15.9

NOTE:

See sheet S17.1 for the shape of the concrete barrier face and other additional details.

DATE	REVISION
12/09/03	1 Revise Section Cut and Revise Detail

DAVID K. FUJIWARA LICENSED PROFESSIONAL ENGINEER NO. 8104-S HAWAII, U.S.A.

THIS WORK WAS PREPARED BY ME OR UNDER MY SUPERVISION.

SIGNATURE — EXPIRATION DATE OF THE LICENSE 12-30-04

STATE OF HAWAII
DEPARTMENT OF TRANSPORTATION
HIGHWAYS DIVISION

SECTIONS
KEEHI INTERCHANGE
INTERSTATE ROUTE H-1
GUARDRAIL AND SHOULDER IMPROVEMENTS
Airport Interchange to Middle Street
Federal Aid Project No. IM-H1-1(240)

SCALE: As Noted DATE: OCTOBER 2003

SHEET No. S15.9 OF 111 SHEETS

ADD. 102

ORIGINAL PLAN — SURVEY PLOTTED BY / DRAWN BY / TRACED BY / DESIGNED BY / QUANTITIES BY / CHECKED BY / DATE / NOTE BOOK No. / REVISIONS 1 2 3 4 5

FILE: PCGS1511.DWG
PLOT: 1 = 1

\\Cad1\ksf\2000\0066-H1 GUARDRAIL\12-08-03 ADD1\ADD1 PCGS1507.dwg, 12/8/2003 9:28:33 AM, KSFinc.pc3, 1:1

FED. ROAD DIST. NO.	STATE	FED. AID PROJ. NO.	FISCAL YEAR	SHEET NO.	TOTAL SHEETS
HAWAII	HAW.	IM-H1-1(240)	2004	103	143

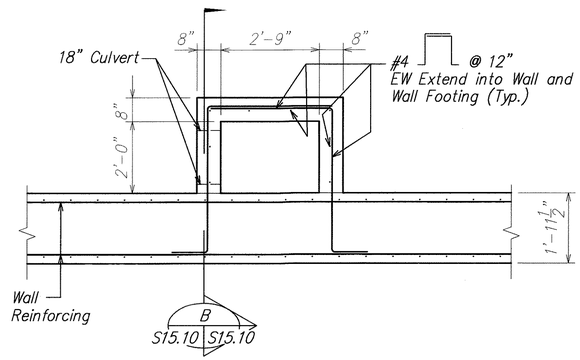

TYPE "A-9" GRATED DROP INLET PLAN

SCALE: 1/2" = 1'-0"

A
S15.7 S15.10

NOTE:

See civil plans for additional details.

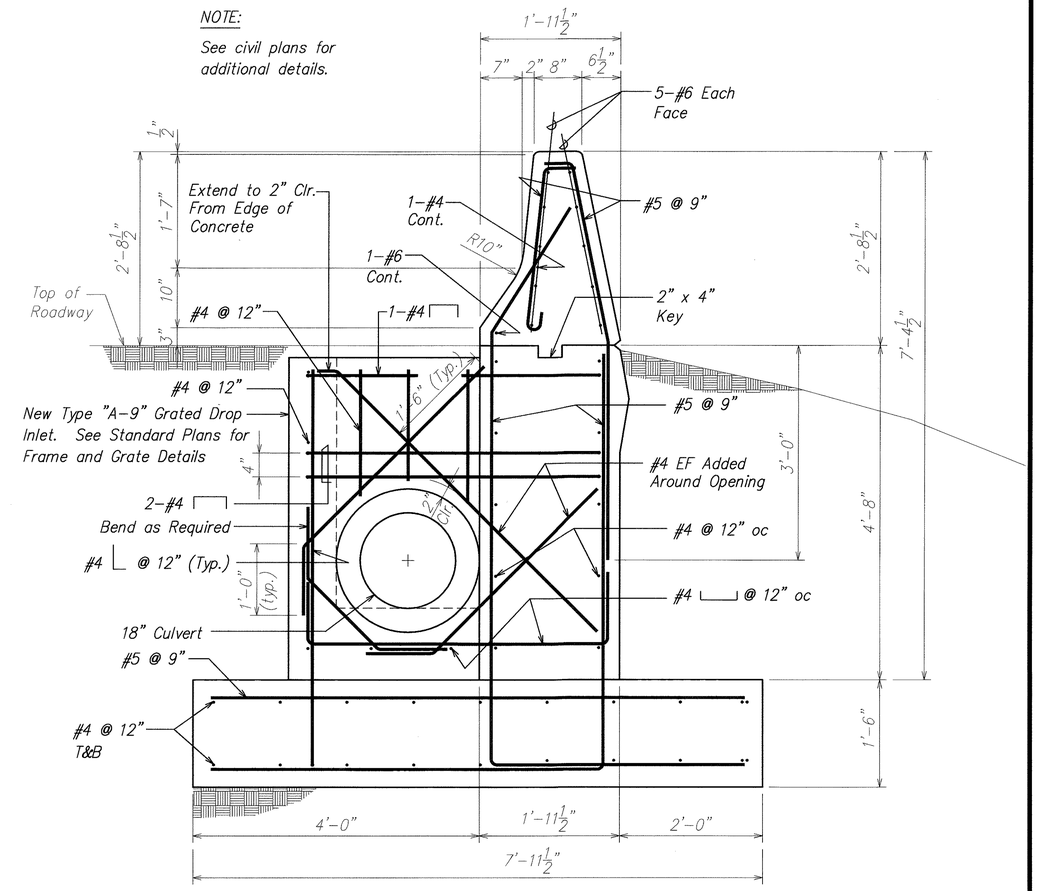

SECTION B

SCALE: 1" = 1'-0"

S15.7 S15.10

DAVID K. FUJIWARA
LICENSED PROFESSIONAL ENGINEER
NO. 8104-S
HAWAII, U.S.A.

THIS WORK WAS PREPARED BY ME OR UNDER MY SUPERVISION.

David K. Fujiwara 4-30-04

SIGNATURE EXPIRATION DATE OF THE LICENSE

STATE OF HAWAII
DEPARTMENT OF TRANSPORTATION
HIGHWAYS DIVISION

PLAN, ELEVATION & SECTION
KEEHI INTERCHANGE
INTERSTATE ROUTE H-1
GUARDRAIL AND SHOULDER IMPROVEMENTS
Airport Interchange to Middle Street
Federal Aid Project No. IM-H1-1(240)

SCALE: As Noted DATE: OCTOBER 2003

SHEET No. S15.10 OF 111 SHEETS

ORIGINAL PLAN
NOTE BOOK No.
SURVEY PLOTTED BY DATE
DRAWN BY
TRACED BY
DESIGNED BY
QUANTITIES BY
CHECKED BY

FILE: PCGS1512.DWG
PLOT: 1 = 1

\\Cad1\ksf\2000\0066-H1 GUARDRAIL\11-05-03\PCGS1507.dwg, 11/5/2003 11:17:08 AM, KSFinc.pc3, 1:1

FED. ROAD DIST. NO.	STATE	FED. AID PROJ. NO.	FISCAL YEAR	SHEET NO.	TOTAL SHEETS
HAWAII	HAW.	IM-H1-1(240)	2004	104	143

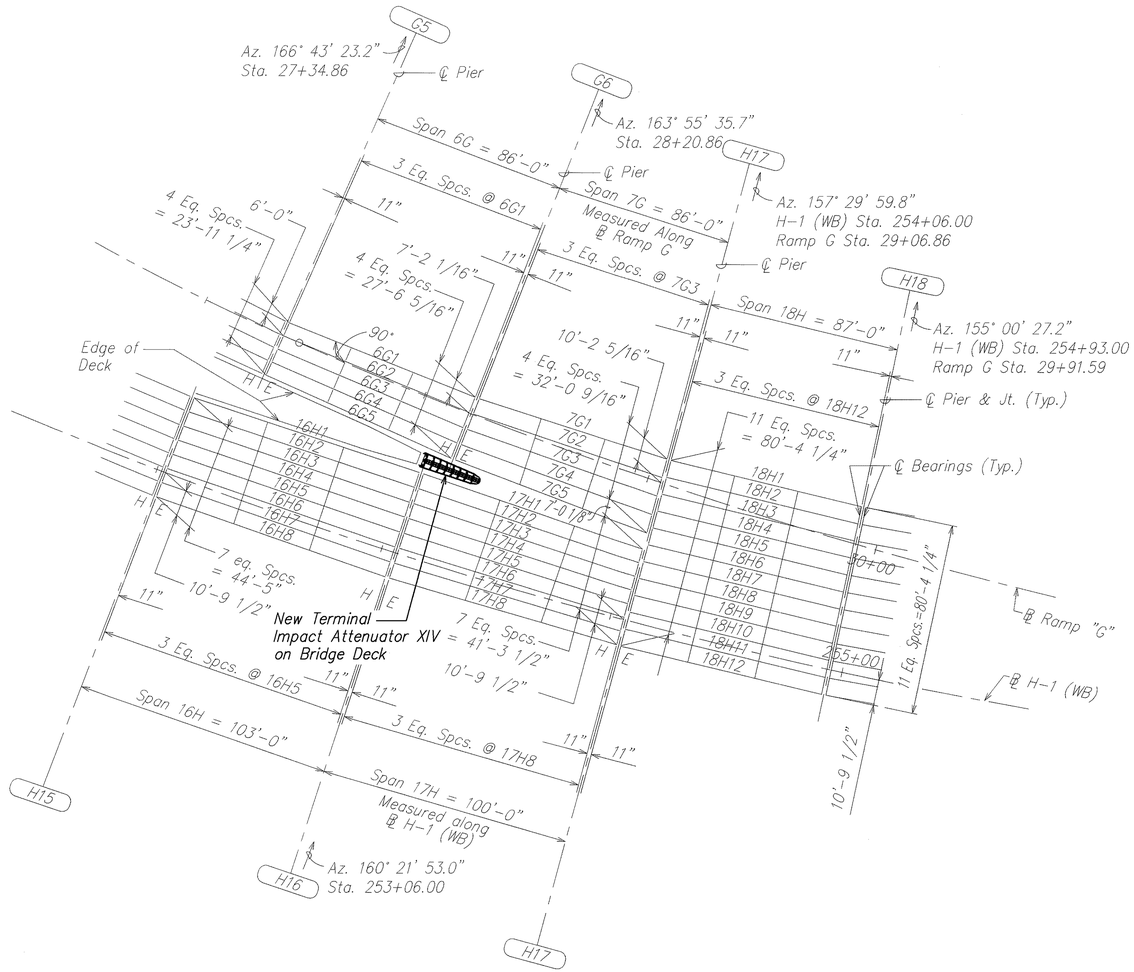

FRAMING PLAN – INT. ROUTE H-1 (EB) & (WB) RAMP A & RAMP B

SCALE: 1" = 30'-0"

ORIGINAL PLAN	SURVEY PLOTTED BY	DATE
	DRAWN BY	"
	TRACED BY	"
NOTE BOOK	DESIGNED BY	"
	QUANTITIES BY	"
No.	CHECKED BY	"

DAVID K. FUJIWARA
LICENSED PROFESSIONAL ENGINEER
NO. 8104-S
HAWAII, U.S.A.

THIS WORK WAS PREPARED BY ME OR UNDER MY SUPERVISION.

SIGNATURE — EXPIRATION DATE OF THE LICENSE 4-30-04

STATE OF HAWAII
DEPARTMENT OF TRANSPORTATION
HIGHWAYS DIVISION

FRAMING PLAN
KEEHI INTERCHANGE
INTERSTATE ROUTE H-1
GUARDRAIL AND SHOULDER IMPROVEMENTS
Airport Interchange to Middle Street
Federal Aid Project No. IM-H1-1(240)

SCALE: As Noted — DATE: OCTOBER 2003

SHEET No. S15.11 OF 111 SHEETS

FILE: PCGS157.DWG
PLOT: 1 = 1

C:\KSF\GUARDRAIL\10-24-03\PCGS1511.dwg, 10/24/2003 11:01:21 AM, KSFinc.pc3, 1:1

FED. ROAD DIST. NO.	STATE	FED. AID PROJ. NO.	FISCAL YEAR	SHEET NO.	TOTAL SHEETS
HAWAII	HAW.	IM-H1-1(240)	2004	105	143

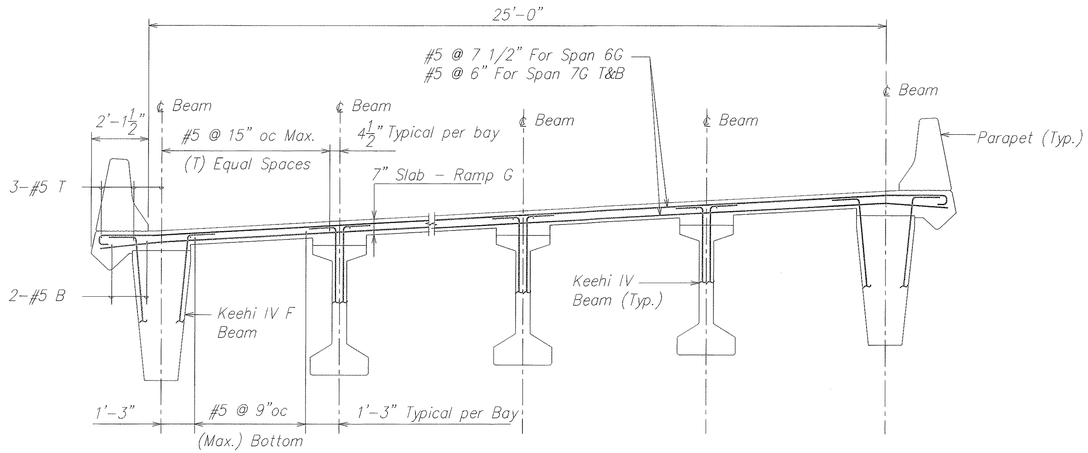

TYPICAL EXISTING DECK SECTION FOR RAMPS F, G & A (A)

SCALE: 3/8" = 1'-0" S15.12 | S15.12

NOTE:
All reinforcing shown on this sheet are existing bars.

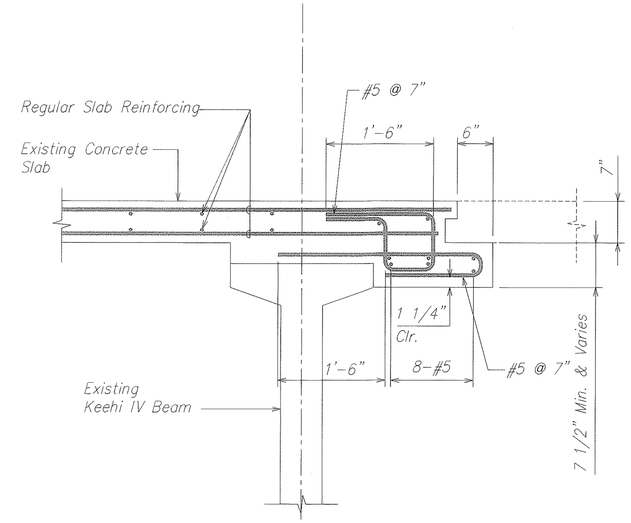

DETAIL (1)

SCALE: 1"=1'-0" S15.12 | S15.12

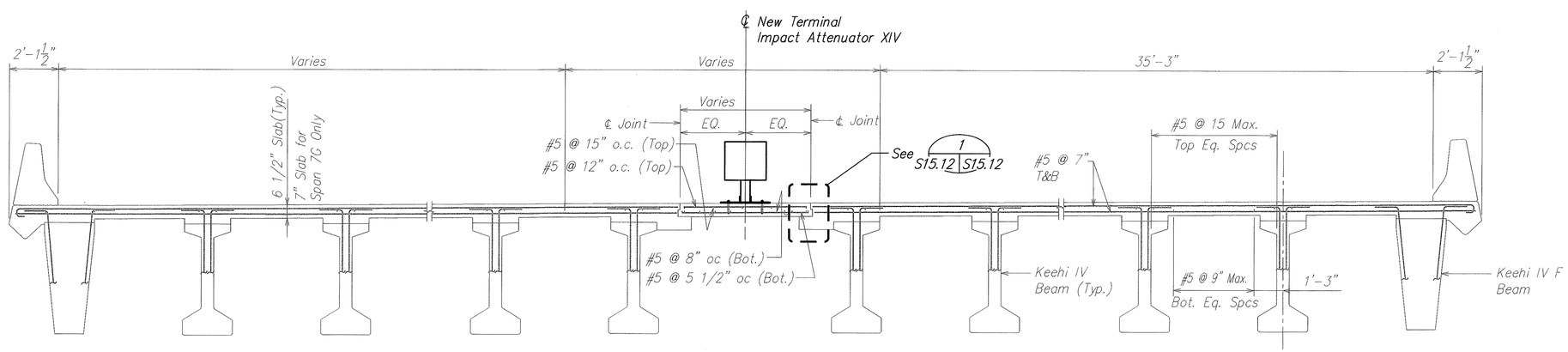

TYPICAL EXISTING DECK SECTION AT SPANS 3H, 17H AND 15HE (B)

SCALE: 3/8" = 1'-0" S15.12 | S15.12

DAVID K. FUJIWARA
LICENSED PROFESSIONAL ENGINEER
NO. 8104-S
HAWAII, U.S.A.

THIS WORK WAS PREPARED BY ME OR UNDER MY SUPERVISION.

SIGNATURE — EXPIRATION DATE OF THE LICENSE 4-30-04

STATE OF HAWAII
DEPARTMENT OF TRANSPORTATION
HIGHWAYS DIVISION

TYPICAL DECK SECTIONS
KEEHI INTERCHANGE
INTERSTATE ROUTE H-1
GUARDRAIL AND SHOULDER IMPROVEMENTS
Airport Interchange to Middle Street
Federal Aid Project No. IM-H1-1(240)

SCALE: As Noted DATE: OCTOBER 2003

SHEET No. S15.12 OF 111 SHEETS

ORIGINAL PLAN	SURVEY PLOTTED BY	DATE
	DRAWN BY	
NOTE BOOK	TRACED BY	
	DESIGNED BY	
	QUANTITIES BY	
No.	CHECKED BY	

FILE: PCGS15B.DWG
PLOT: 1 = 1

C:\KSF\GUARDRAIL\10-24-03\PCGS1512.dwg, 10/24/2003 11:02:02 AM, KSFinc.pc3, 1:1

FED. ROAD DIST. NO.	STATE	FED. AID PROJ. NO.	FISCAL YEAR	SHEET NO.	TOTAL SHEETS
HAWAII	HAW.	IM-H1-1(240)	2004	106	143

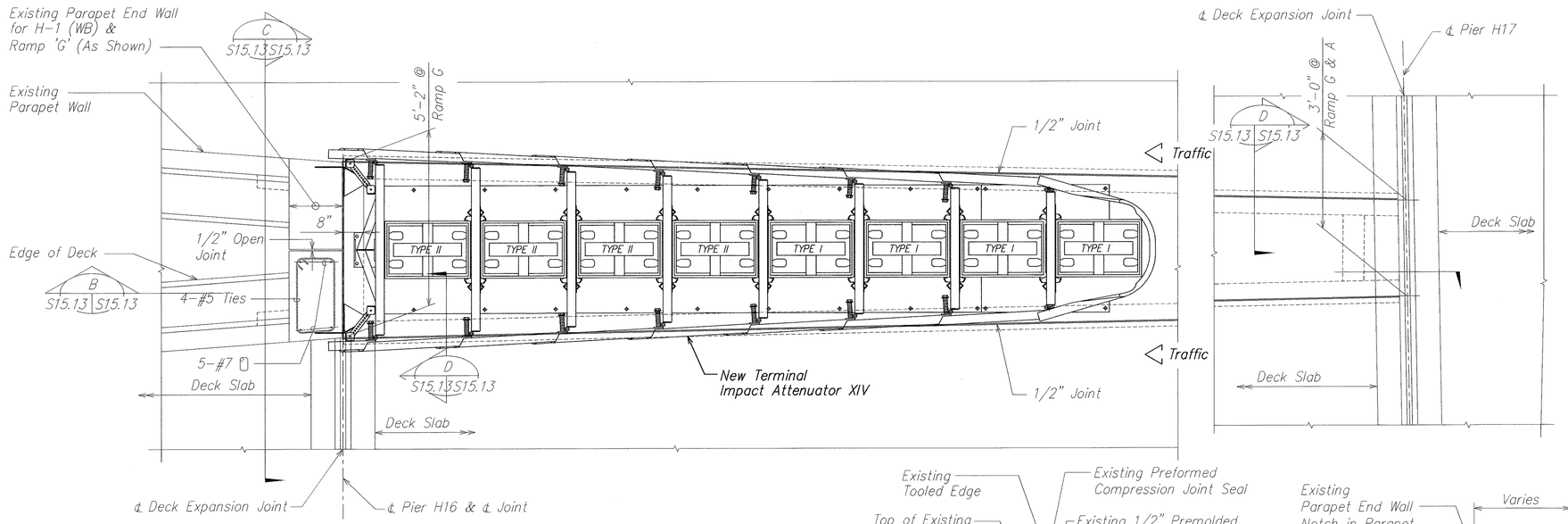

PARTIAL DECK JOINT PLAN BETWEEN PIERS H16 & H17

SCALE: 1/2"= 1'-0"

A
S15.13 S15.13

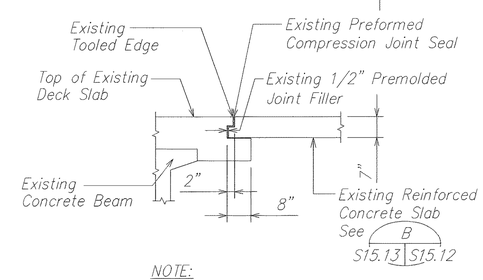

NOTE:
See sheet S15.12 for additional details.

SECTION D

Scale: 1/2" =1'-0" S15.13 S15.13

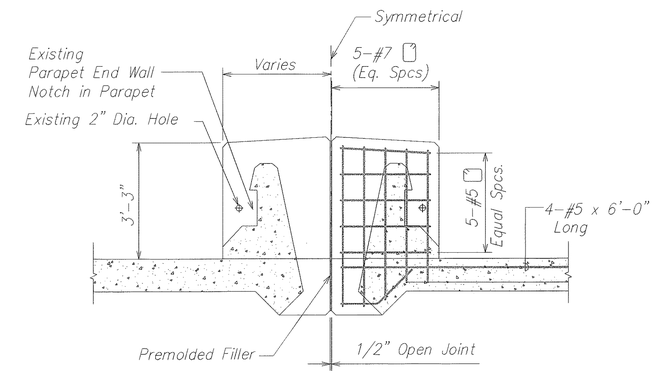

SECTION C

Scale: 1/2" =1'-0" S15.13 S15.13

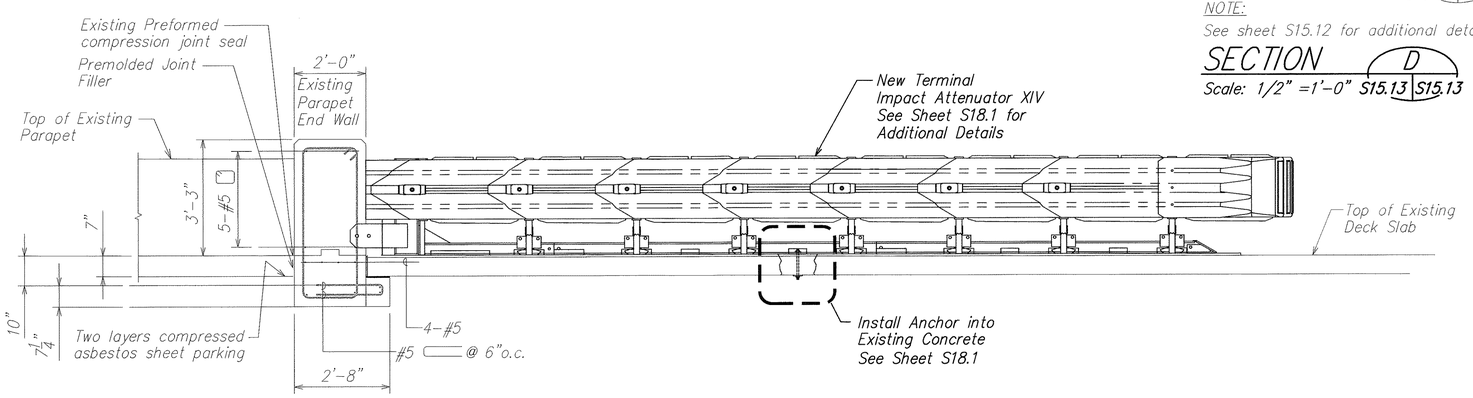

SECTION B

Scale: 1/2" =1'-0" S15.13 S15.13

NOTE:
All reinforcing shown on this sheet are existing bars.

DAVID K. FUJIWARA
LICENSED PROFESSIONAL ENGINEER
NO. 8104-S
HAWAII, U.S.A.

THIS WORK WAS PREPARED BY ME OR UNDER MY SUPERVISION.

SIGNATURE — EXPIRATION DATE OF THE LICENSE 4-30-04

STATE OF HAWAII
DEPARTMENT OF TRANSPORTATION
HIGHWAYS DIVISION

PARTIAL DECK PLAN & SECT.
KEEHI INTERCHANGE
INTERSTATE ROUTE H-1
GUARDRAIL AND SHOULDER IMPROVEMENTS
Airport Interchange to Middle Street
Federal Aid Project No. IM-H1-1(240)

SCALE: As Noted — DATE: OCTOBER 2003

SHEET No. S15.13 OF 111 SHEETS

ORIGINAL PLAN — NOTE BOOK No. — SURVEY PLOTTED BY — DRAWN BY — TRACED BY — DESIGNED BY — QUANTITIES BY — CHECKED BY — DATE

FILE: PCGS1513.DWG
PLOT: 1 = 1

\\Cad1\xsf\2000\0066-H1 GUARDRAIL\11-05-03\PCGS1513.dwg, 11/5/2003 11:18:04 AM, KSFinc.pc3, 1:1

FED. ROAD DIST. NO.	STATE	FED. AID PROJ. NO.	FISCAL YEAR	SHEET NO.	TOTAL SHEETS
HAWAII	HAW.	IM-H1-1(240)	2004	107	143

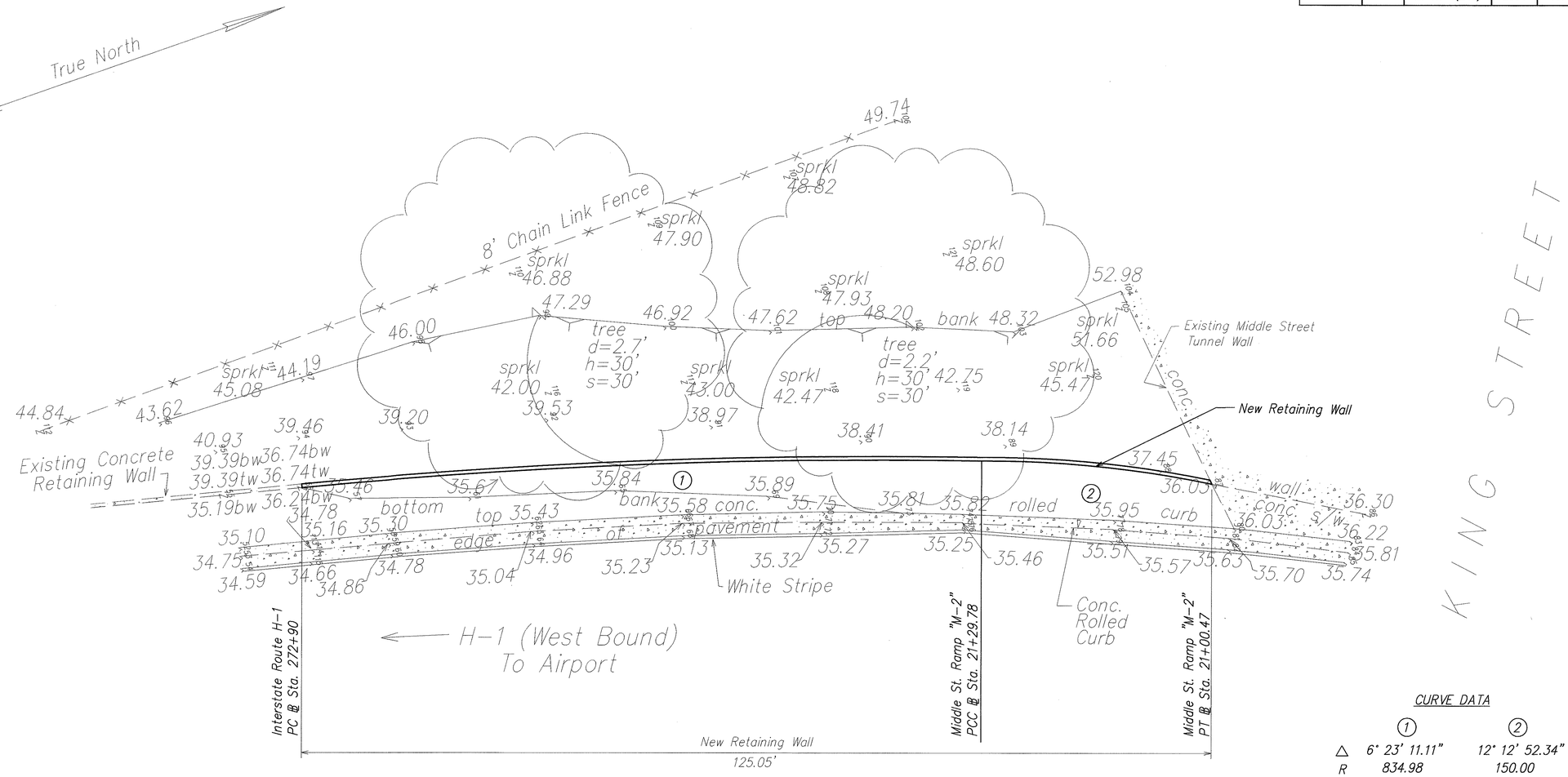

RETAINING WALL – PLAN

Scale: 1/8" = 1-'-0"

NOTE:
Equation Sta. at Interstate Route H-1,
P.C.C. Sta. 273+74.39 = Ramp "M-2",
P.C.C. Sta. 21+33.93

CURVE DATA

	1	2
Δ	6° 23' 11.11"	12° 12' 52.34"
R	834.98	150.00
T	46.58	16.05
Ch	93.02	31.91
Lc	93.07	31.98

ORIGINAL PLAN	SURVEY PLOTTED BY	DATE
	DRAWN BY	"
NOTE BOOK	TRACED BY	"
	DESIGNED BY	"
	QUANTITIES BY	"
No.	CHECKED BY	"

DAVID K. FUJIWARA
LICENSED PROFESSIONAL ENGINEER
NO. 8104-S
HAWAII, U.S.A.

THIS WORK WAS PREPARED BY ME OR UNDER MY SUPERVISION.

SIGNATURE — EXPIRATION DATE OF THE LICENSE 4-30-04

STATE OF HAWAII
DEPARTMENT OF TRANSPORTATION
HIGHWAYS DIVISION

RETAINING WALL PLAN
MIDDLE STREET TUNNEL
INTERSTATE ROUTE H-1
GUARDRAIL AND SHOULDER IMPROVEMENTS
Airport Interchange to Middle Street
Federal Aid Project No. IM-H1-1(240)

SCALE: As Noted — DATE: OCTOBER 2003

SHEET No. S16.1 OF 111 SHEETS

FILE: PCDS161.DWG
PLOT: 1 = 1

C:\KSF\GUARDRAIL\10-24-03\PCDS161.dwg, 10/24/2003 11:07:46 AM, KSFinc.pc3, 1:1

FED. ROAD DIST. NO.	STATE	FED. AID PROJ. NO.	FISCAL YEAR	SHEET NO.	TOTAL SHEETS
HAWAII	HAW.	IM-H1-1(240)	2004	ADD. 108	143

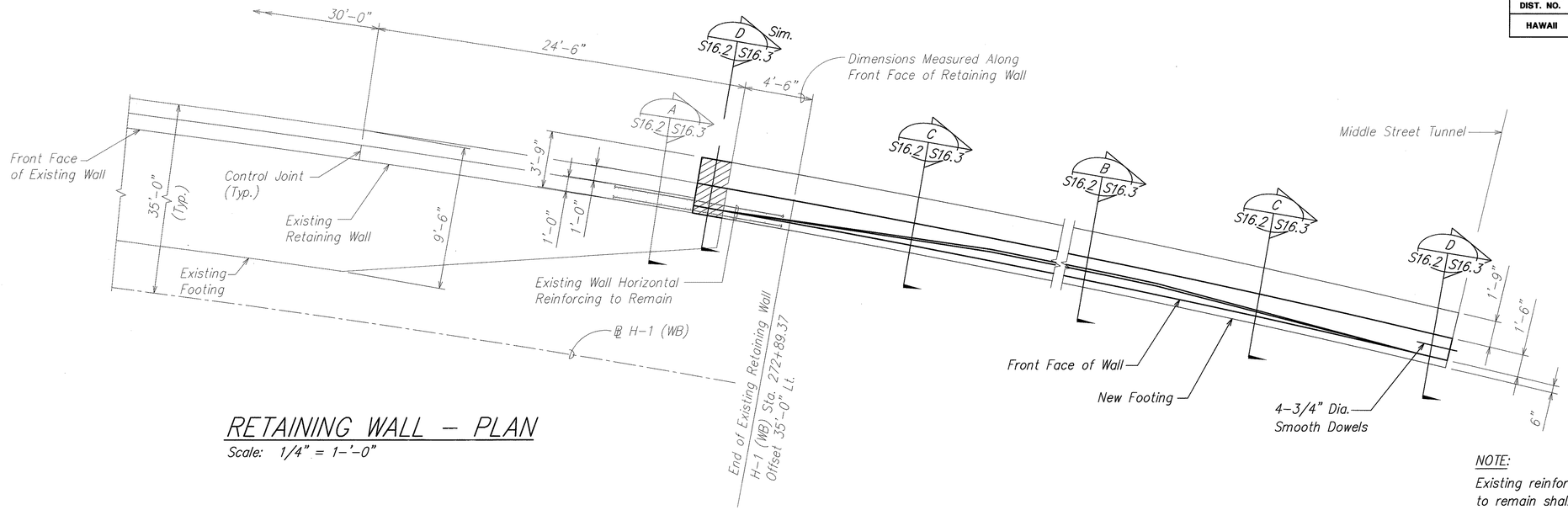

RETAINING WALL – PLAN

Scale: 1/4" = 1-'-0"

NOTE:
Existing reinforcing that is to remain shall not be damaged in any way.

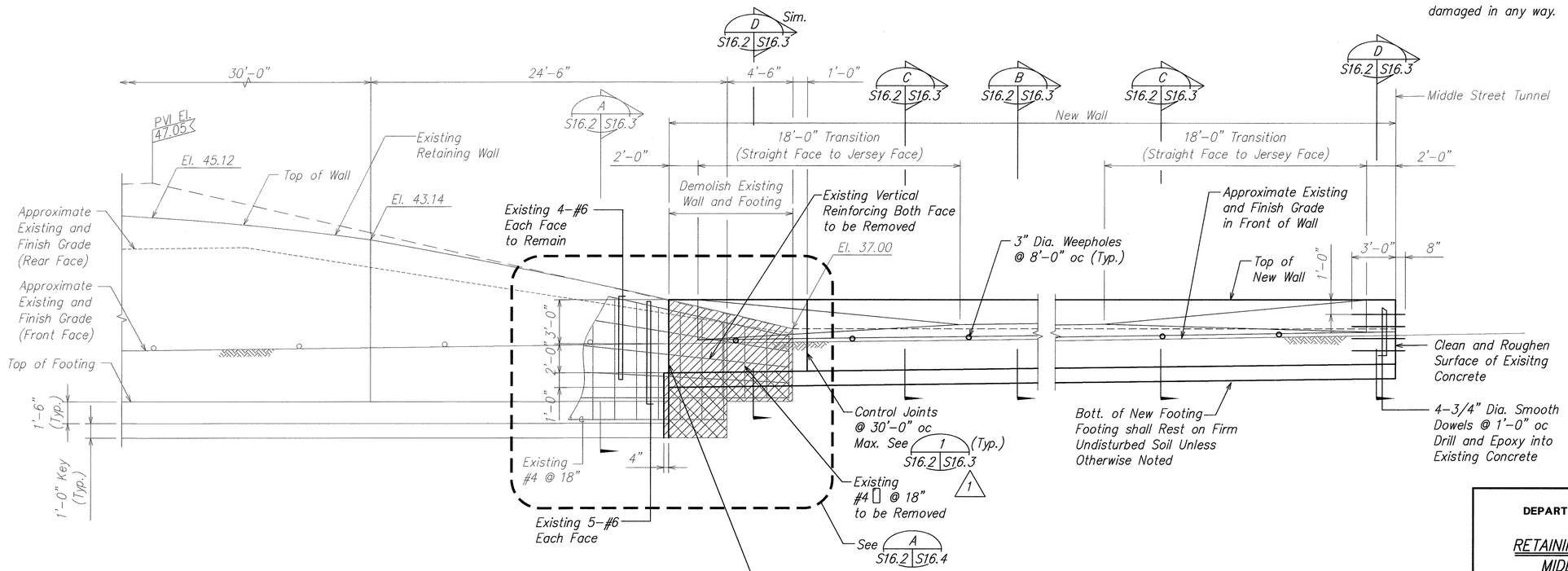

RETAINING WALL – ELEVATION

Scale: 1/4" = 1-'-0"

ORIGINAL PLAN	SURVEY PLOTTED BY	DATE
	DRAWN BY	
	TRACED BY	
NOTE BOOK	DESIGNED BY	
	QUANTITIES BY	
No.	CHECKED BY	

DATE	REVISION
12/09/03	1 Revise Section Cut

DAVID K. FUJIWARA LICENSED PROFESSIONAL ENGINEER NO. 8104-S HAWAII, U.S.A.

THIS WORK WAS PREPARED BY ME OR UNDER MY SUPERVISION.

SIGNATURE — EXPIRATION DATE OF THE LICENSE 4-30-04

STATE OF HAWAII
DEPARTMENT OF TRANSPORTATION
HIGHWAYS DIVISION

RETAINING WALL PLAN & SECT.
MIDDLE STREET TUNNEL
INTERSTATE ROUTE H-1
GUARDRAIL AND SHOULDER IMPROVEMENTS
Airport Interchange to Middle Street
Federal Aid Project No. IM-H1-1(240)

SCALE: As Noted — DATE: OCTOBER 2003

SHEET No. S16.2 OF 111 SHEETS

ADD. 108

FILE: PCGS162.DWG
PLOT: 1 = 1

\\Cad1\vsf\2000\0066-H1 GUARDRAIL\12-08-03 ADD1\ADD1 PCGS1601.dwg, 12/8/2003 9:29:35 AM, KSFinc.pc3, 1:1

FED. ROAD DIST. NO.	STATE	FED. AID PROJ. NO.	FISCAL YEAR	SHEET NO.	TOTAL SHEETS
HAWAII	HAW.	IM-H1-1(240)	2004	109	143

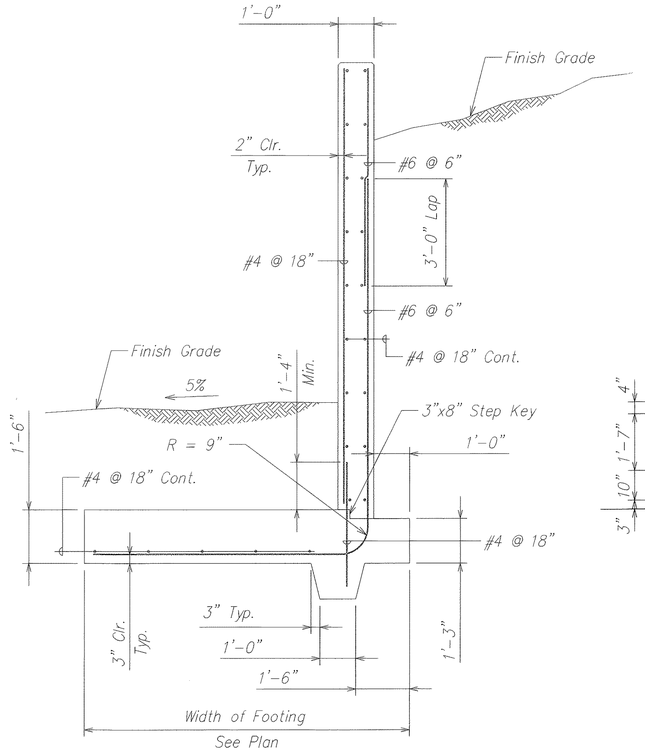

EXISTING WALL SECTION A

SCALE: 1/2" = 1'-0"

S16.2 | S16.3

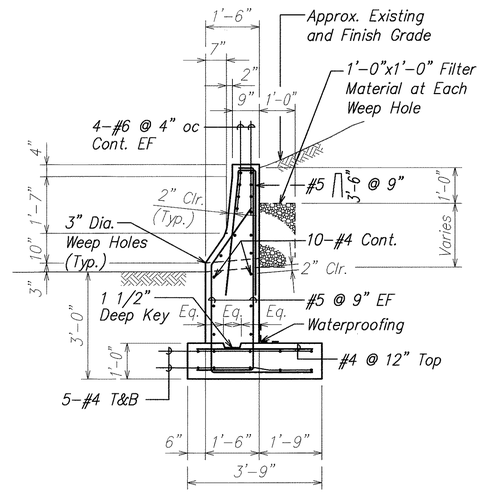

SECTION B

SCALE: 1/2" = 1'-0"

S16.2 | S16.3

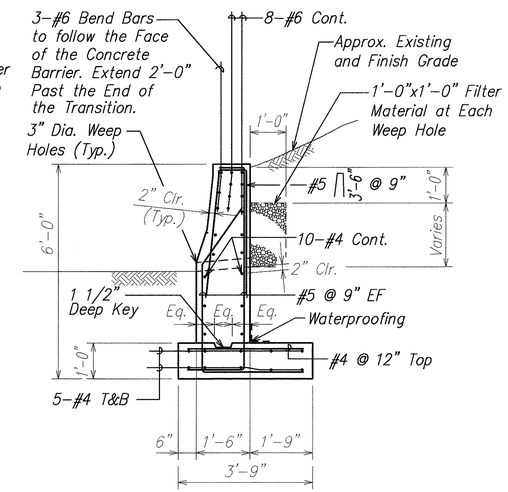

SECTION C

SCALE: 1/2" = 1'-0"

S16.2 | S16.3

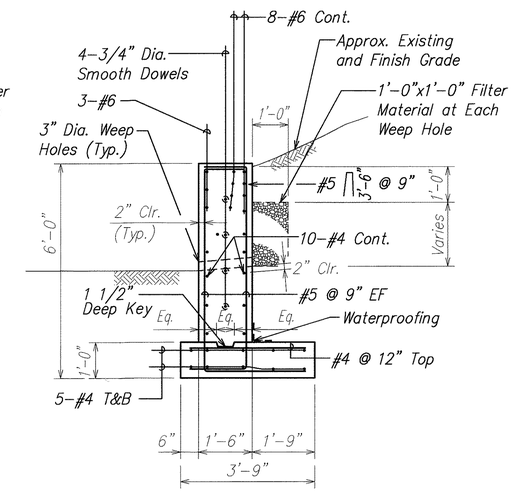

SECTION D

SCALE: 1/2" = 1'-0"

S16.2 | S16.3

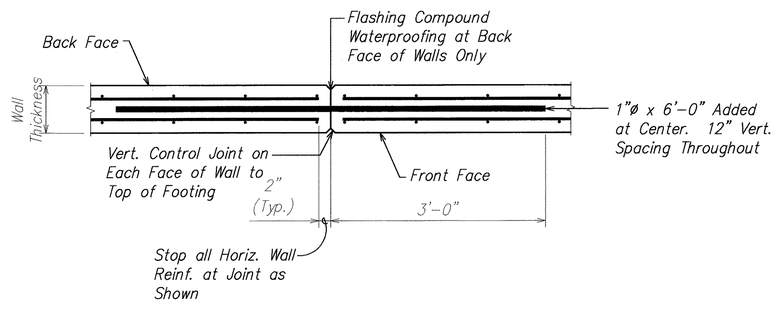

CONTROL JOINT 1

SCALE: 1" = 1'-0"

S16.3 | S16.3

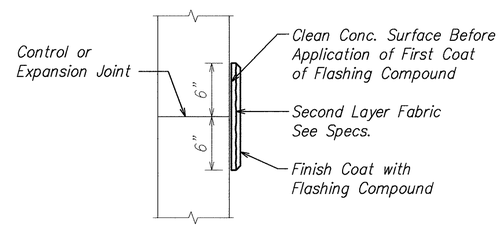

TYPICAL FLASHING COMPOUND WATERPROOFING DETAIL 2

SCALE: 1 1/2" = 1'-0"

S16.3 | S16.3

ORIGINAL PLAN	SURVEY PLOTTED BY	DATE
	DRAWN BY	
NOTE BOOK	TRACED BY	
	DESIGNED BY	
	QUANTITIES BY	
No.	CHECKED BY	

DAVID K. FUJIWARA LICENSED PROFESSIONAL ENGINEER NO. 8104-S HAWAII, U.S.A.

THIS WORK WAS PREPARED BY ME OR UNDER MY SUPERVISION.

SIGNATURE — EXPIRATION DATE OF THE LICENSE 4-30-04

STATE OF HAWAII
DEPARTMENT OF TRANSPORTATION
HIGHWAYS DIVISION

SECTIONS
MIDDLE STREET TUNNEL
INTERSTATE ROUTE H-1
GUARDRAIL AND SHOULDER IMPROVEMENTS
Airport Interchange to Middle Street
Federal Aid Project No. IM-H1-1(240)

SCALE: As Noted — DATE: OCTOBER 2003

SHEET No. S16.3 OF 111 SHEETS

FILE: PCGS163.DWG
PLOT: 1 = 1

\\Cad\xsf\2000\0066-H1 GUARDRAIL\11-05-03\PCGS1603.dwg, 11/5/2003 11:19:57 AM, KSFinc.pc3, 1:1

FED. ROAD DIST. NO.	STATE	FED. AID PROJ. NO.	FISCAL YEAR	SHEET NO.	TOTAL SHEETS
HAWAII	HAW.	IM-H1-1(240)	2004	110	143

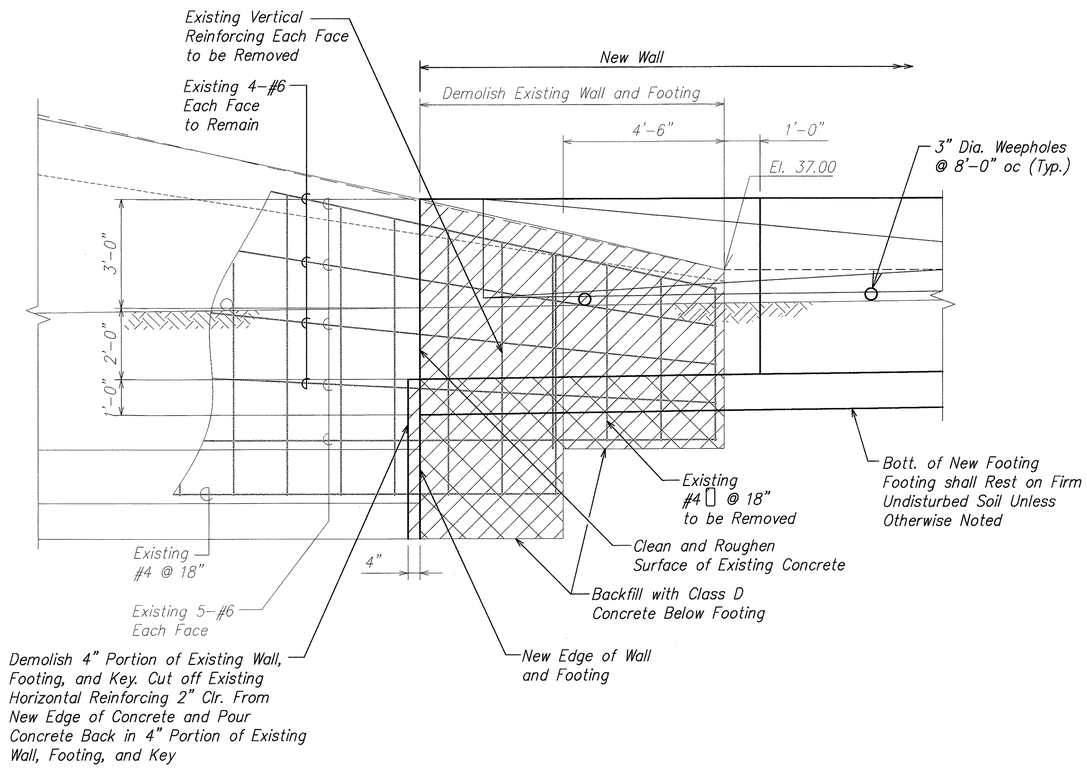

SECTION A
SCALE: 1/2" = 1-'-0" S16.2 S16.4

ORIGINAL PLAN	SURVEY PLOTTED BY	DATE
	DRAWN BY	"
NOTE BOOK	TRACED BY	"
	DESIGNED BY	"
	QUANTITIES BY	"
No.	CHECKED BY	"

DAVID K. FUJIWARA
LICENSED PROFESSIONAL ENGINEER
NO. 8104-S
HAWAII, U.S.A.

THIS WORK WAS PREPARED BY ME OR UNDER MY SUPERVISION.

SIGNATURE — EXPIRATION DATE OF THE LICENSE 4-30-04

STATE OF HAWAII
DEPARTMENT OF TRANSPORTATION
HIGHWAYS DIVISION

RETAINING WALL SECTION
MIDDLE STREET TUNNEL
INTERSTATE ROUTE H-1
GUARDRAIL AND SHOULDER IMPROVEMENTS
Airport Interchange to Middle Street
Federal Aid Project No. IM-H1-1(240)

SCALE: As Noted DATE: OCTOBER 2003

SHEET No. S16.4 OF 111 SHEETS

FILE: PCCS164.DWG
PLOT: 1 = 1

\\Cad1\vsf\2000\0066-H1 GUARDRAIL\11-05-03\PCCS160.dwg, 11/5/2003 11:21:22 AM, KSFinc.pc3, 1:1

FED. ROAD DIST. NO.	STATE	FED. AID PROJ. NO.	FISCAL YEAR	SHEET NO.	TOTAL SHEETS
HAWAII	HAW.	IM-H1-1(240)	2004	111	143

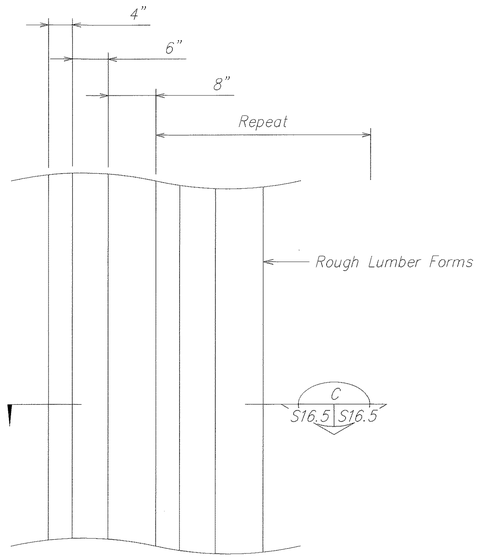

ELEVATION (B / S16.5 S16.5)
Not To Scale

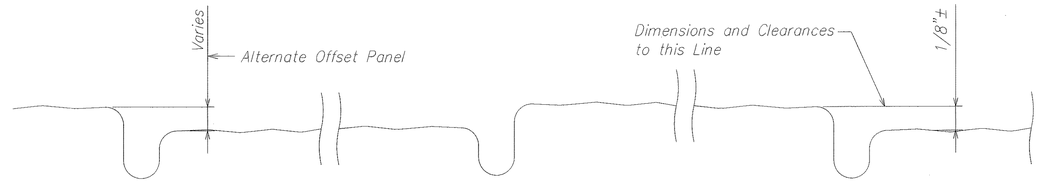

NOTE:
New wall finish to match existing wall finish.

SECTION (C / S16.5 S16.5)
Not To Scale

DETAIL – RETAINING WALL FINISH (BOARD FINISH) (A / S16.3 S16.5)
Scale: 1" = 1'-0"

ORIGINAL PLAN | SURVEY PLOTTED BY | DRAWN BY | TRACED BY | DESIGNED BY | QUANTITIES BY | CHECKED BY | DATE
NOTE BOOK No.

THIS WORK WAS PREPARED BY ME OR UNDER MY SUPERVISION.

DAVID K. FUJIWARA LICENSED PROFESSIONAL ENGINEER NO. 8104-S HAWAII, U.S.A.

SIGNATURE — EXPIRATION DATE OF THE LICENSE 4-30-04

STATE OF HAWAII
DEPARTMENT OF TRANSPORTATION
HIGHWAYS DIVISION

SECTIONS
MIDDLE STREET TUNNEL
INTERSTATE ROUTE H-1
GUARDRAIL AND SHOULDER IMPROVEMENTS
Airport Interchange to Middle Street
Federal Aid Project No. IM-H1-1(240)

SCALE: As Noted — DATE: OCTOBER 2003

SHEET No. S16.5 OF 111 SHEETS

FILE: PCG165.DWG
PLOT: 1 = 1

C:\KSF\GUARDRAIL\10-24-03\PCGS1603.dwg, 10/24/2003 11:15:24 AM, KSFinc.pc3, 1:1

FED. ROAD DIST. NO.	STATE	FED. AID PROJ. NO.	FISCAL YEAR	SHEET NO.	TOTAL SHEETS
HAWAII	HAW.	IM-H1-1(240)	2004	112	143

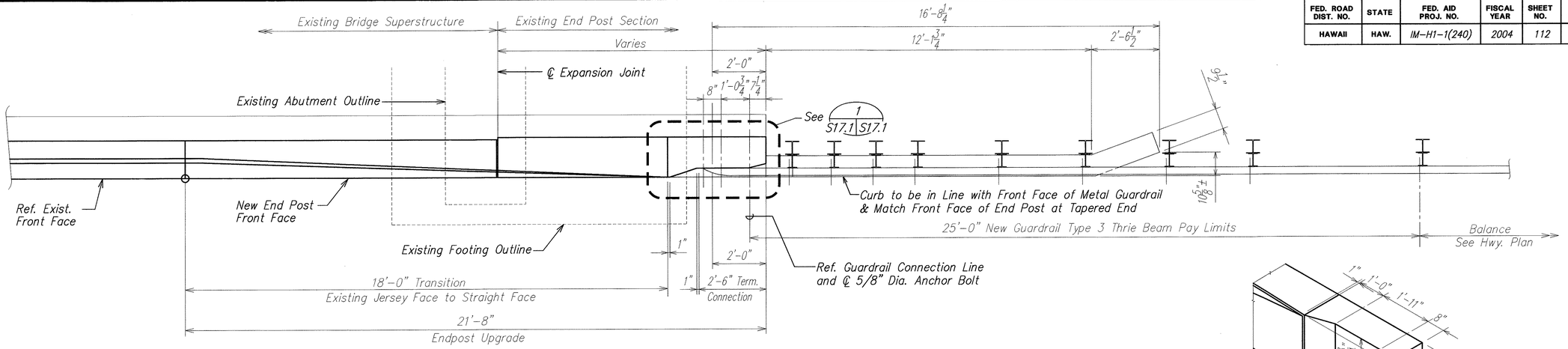

PLAN

SCALE: 1/2 " = 1'-0"

NOTE:
See sheets S17.7 and S17.8 for metal guardrail Type 3 thrie beam and appurtenances details.

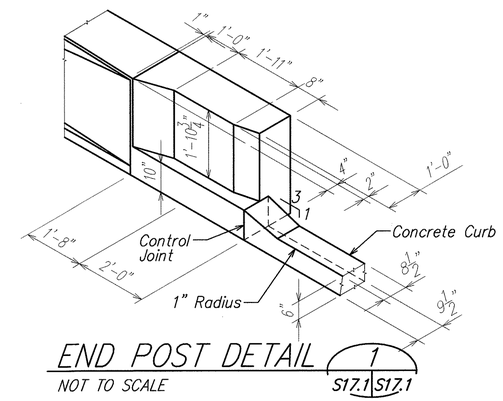

END POST DETAIL 1 S17.1 S17.1

NOT TO SCALE

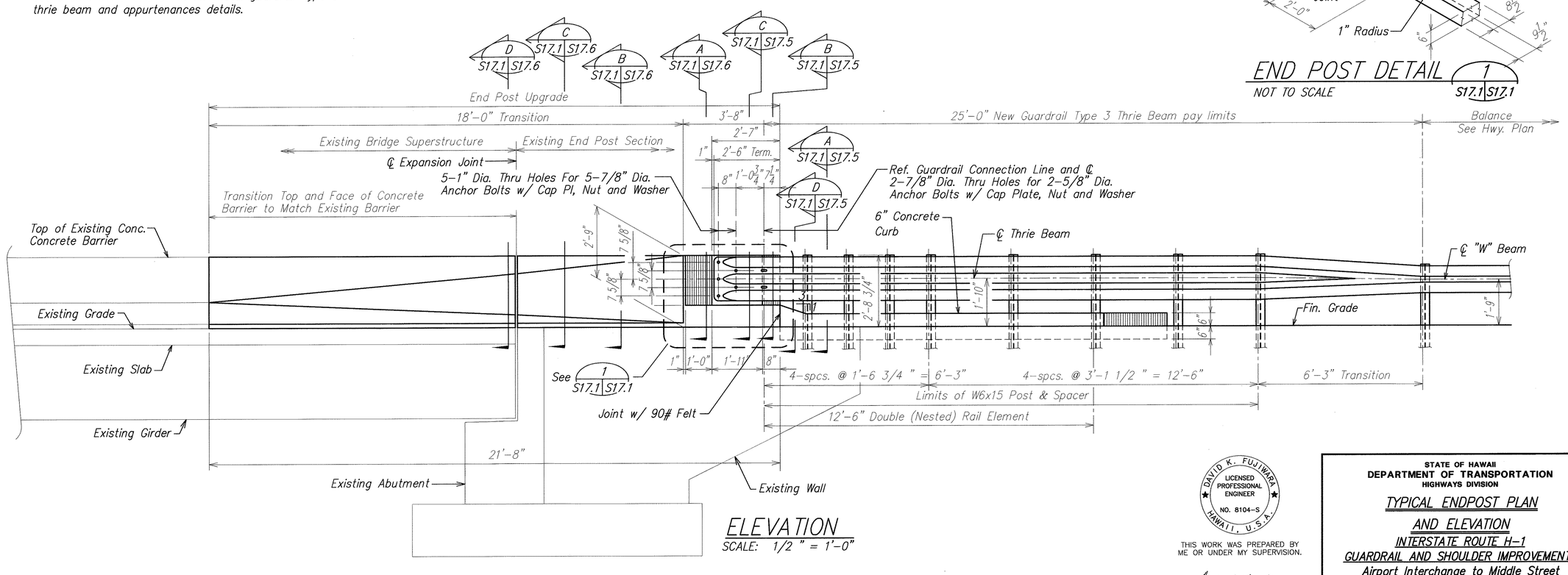

ELEVATION

SCALE: 1/2 " = 1'-0"

TYPICAL ENDPOST UPGRADE PLAN AND ELEVATION

ORIGINAL PLAN	SURVEY PLOTTED BY	DATE
	DRAWN BY	
	TRACED BY	
NOTE BOOK	DESIGNED BY	
	QUANTITIES BY	
No.	CHECKED BY	

DAVID K. FUJIWARA LICENSED PROFESSIONAL ENGINEER NO. 8104-S HAWAII, U.S.A.

THIS WORK WAS PREPARED BY ME OR UNDER MY SUPERVISION.

SIGNATURE — EXPIRATION DATE OF THE LICENSE 4-30-04

STATE OF HAWAII
DEPARTMENT OF TRANSPORTATION
HIGHWAYS DIVISION

TYPICAL ENDPOST PLAN AND ELEVATION
INTERSTATE ROUTE H-1
GUARDRAIL AND SHOULDER IMPROVEMENTS
Airport Interchange to Middle Street
Federal Aid Project No. IM-H1-1(240)

SCALE: As Noted — DATE: OCTOBER 2003

SHEET No. S17.1 OF 111 SHEETS

FILE: PCG171.DWG
PLOT: 1 = 1

\\Cad1\ksf\2000\0066-H1 GUARDRAIL\11-05-03\PCGS170.dwg, 11/5/2003 11:29:47 AM, KSFinc.pc3, 1:1

FED. ROAD DIST. NO.	STATE	FED. AID PROJ. NO.	FISCAL YEAR	SHEET NO.	TOTAL SHEETS
HAWAII	HAW.	IM-H1-1(240)	2004	113	143

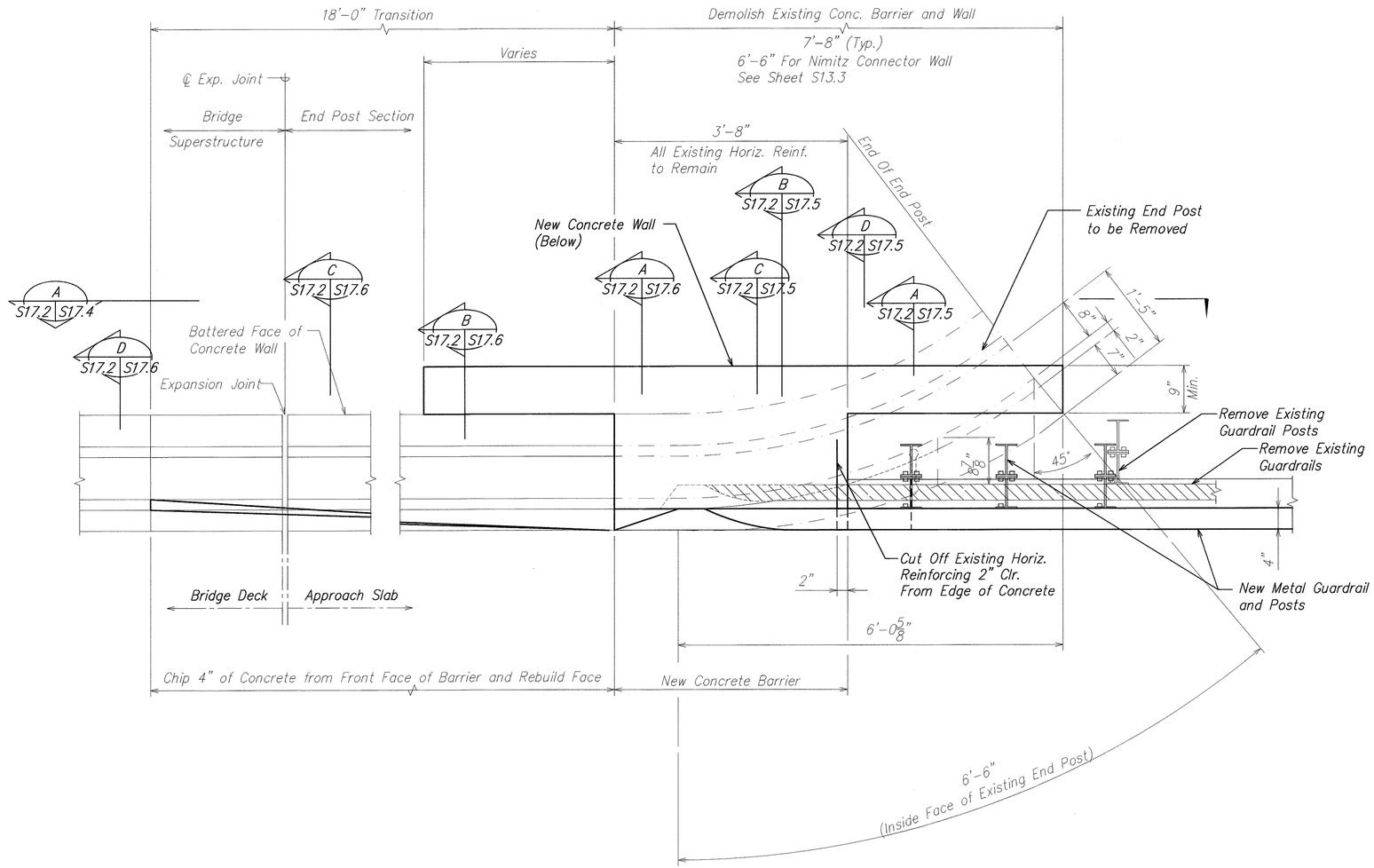

TYPICAL END POST PLAN

SCALE: 1" = 1'-0"

ORIGINAL PLAN
NOTE BOOK No.
SURVEY PLOTTED BY
DRAWN BY
TRACED BY
DESIGNED BY
QUANTITIES BY
CHECKED BY
DATE

DAVID K. FUJIWARA
LICENSED PROFESSIONAL ENGINEER
NO. 8104-S
HAWAII, U.S.A.

THIS WORK WAS PREPARED BY ME OR UNDER MY SUPERVISION.

SIGNATURE — EXPIRATION DATE OF THE LICENSE 4-30-04

STATE OF HAWAII
DEPARTMENT OF TRANSPORTATION
HIGHWAYS DIVISION

TYPICAL END POST PLAN

INTERSTATE ROUTE H-1
GUARDRAIL AND SHOULDER IMPROVEMENTS
Airport Interchange to Middle Street
Federal Aid Project No. IM-H1-1(240)

SCALE: As Noted — DATE: OCTOBER 2003

SHEET No. S17.2 OF 111 SHEETS

FILE: PCGS172.DWG
PLOT: 1 = 1

\\Cad1\vol\2000\0066-H1 GUARDRAIL\11-05-03\PCGS1702.dwg, 11/5/2003 11:30:21 AM, KSFinc.pc3, 1:1

FED. ROAD DIST. NO.	STATE	FED. AID PROJ. NO.	FISCAL YEAR	SHEET NO.	TOTAL SHEETS
HAWAII	HAW.	IM-H1-1(240)	2004	114	143

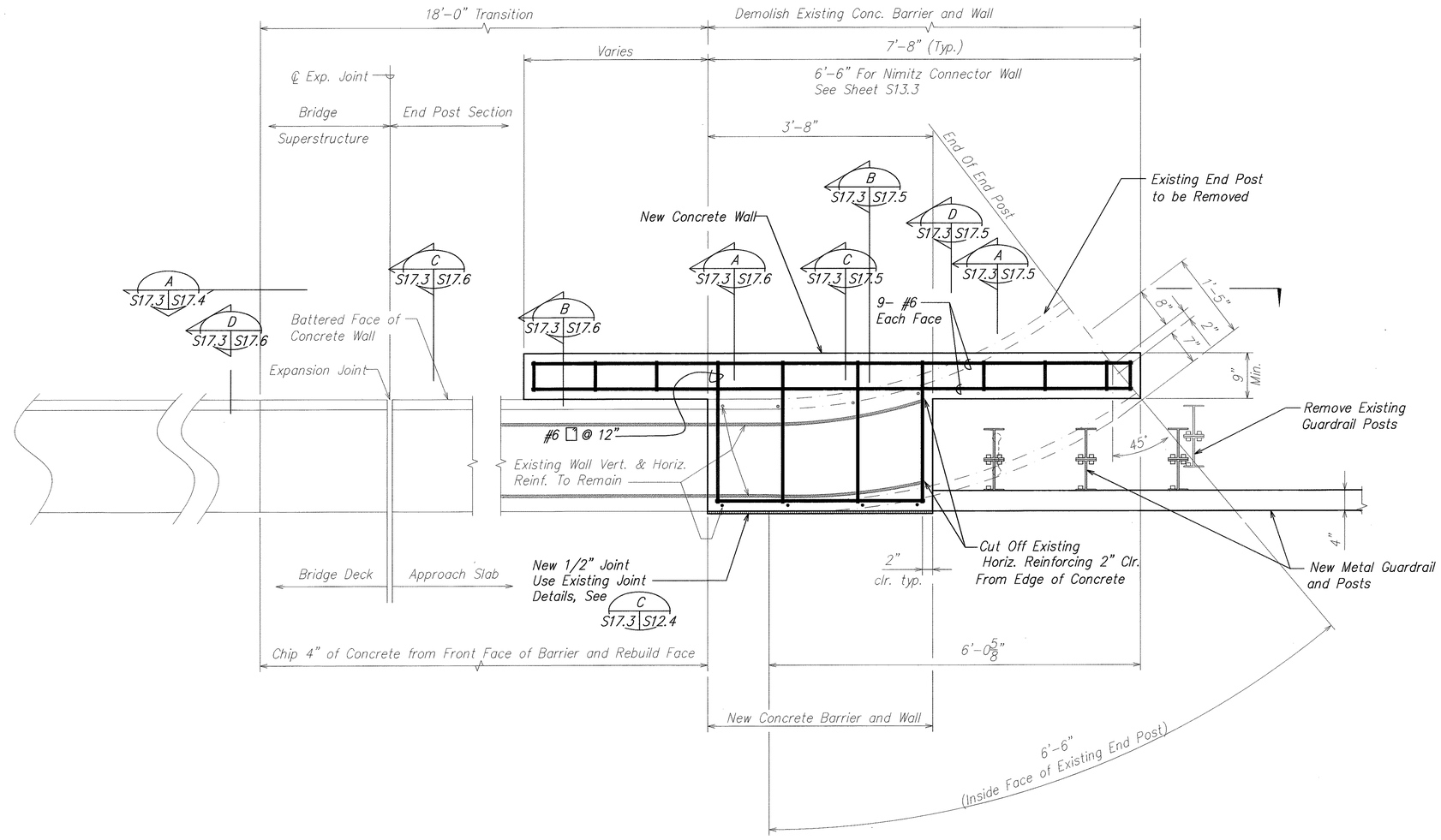

TYPICAL RETAINING WALL

SCALE: 1" = 1'-0"

ORIGINAL PLAN	SURVEY PLOTTED BY	DATE
	DRAWN BY	
NOTE BOOK	TRACED BY	
	DESIGNED BY	
	QUANTITIES BY	
No.	CHECKED BY	

DAVID K. FUJIWARA
LICENSED PROFESSIONAL ENGINEER
NO. 8104-S
HAWAII, U.S.A.

THIS WORK WAS PREPARED BY ME OR UNDER MY SUPERVISION.

SIGNATURE — EXPIRATION DATE OF THE LICENSE 4-30-04

STATE OF HAWAII
DEPARTMENT OF TRANSPORTATION
HIGHWAYS DIVISION

TYPICAL END POST PLAN

INTERSTATE ROUTE H-1
GUARDRAIL AND SHOULDER IMPROVEMENTS
Airport Interchange to Middle Street
Federal Aid Project No. IM-H1-1(240)

SCALE: As Noted — DATE: OCTOBER 2003

SHEET No. S17.3 OF 111 SHEETS

FILE: PCGS173.DWG
PLOT: 1 = 1

\\Cad1\ksf\2000\0066-H1 GUARDRAIL\11-05-03\PCGS1702.dwg, 11/5/2003 11:30:43 AM, KSFinc.pc3, 1:1

FED. ROAD DIST. NO.	STATE	FED. AID PROJ. NO.	FISCAL YEAR	SHEET NO.	TOTAL SHEETS
HAWAII	HAW.	IM-H1-1(240)	2004	115	143

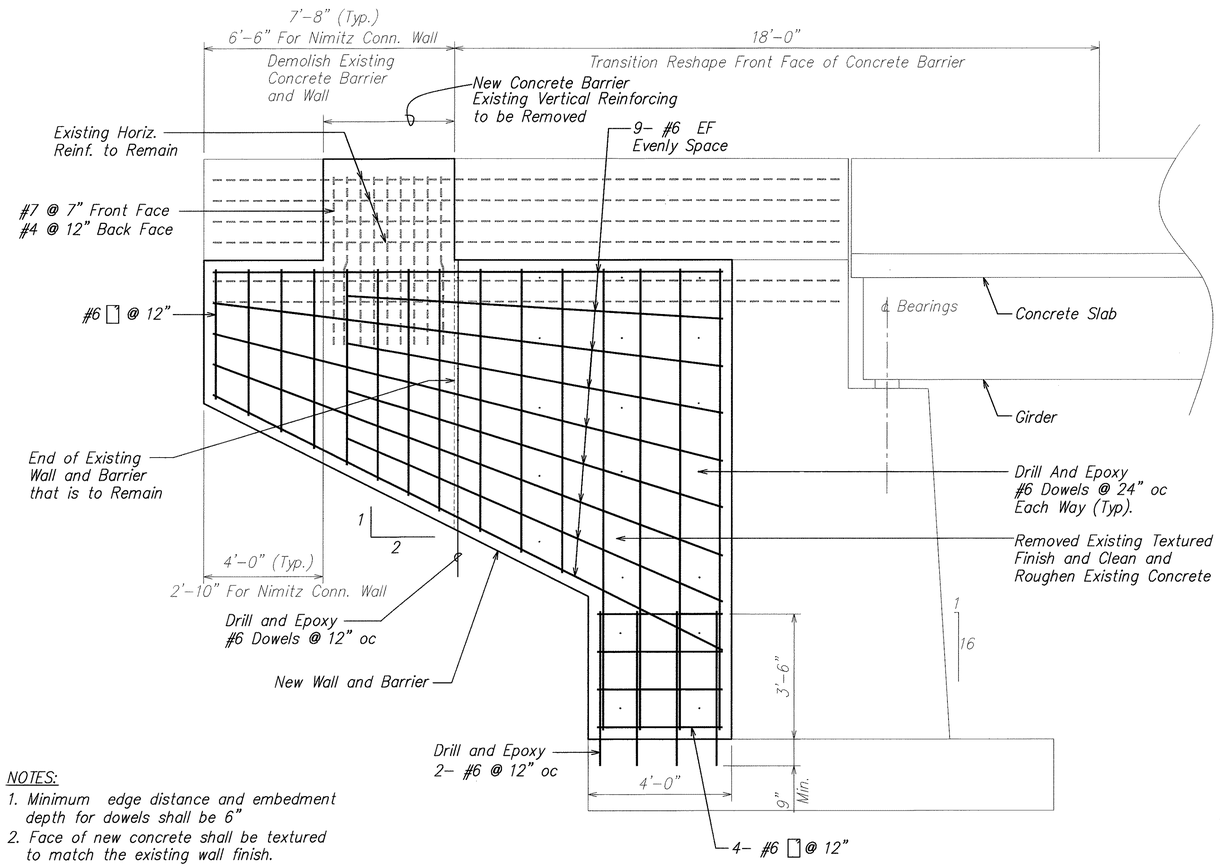

NOTES:

1. Minimum edge distance and embedment depth for dowels shall be 6"
2. Face of new concrete shall be textured to match the existing wall finish.

ELEVATION A
SCALE: 1/2" =1'-0"
S17.2 | S17.4
S17.3

DAVID K. FUJIWARA
LICENSED PROFESSIONAL ENGINEER
NO. 8104-S
HAWAII, U.S.A.

THIS WORK WAS PREPARED BY ME OR UNDER MY SUPERVISION.

David K. Fujiwara 4-30-04
SIGNATURE EXPIRATION DATE OF THE LICENSE

STATE OF HAWAII
DEPARTMENT OF TRANSPORTATION
HIGHWAYS DIVISION

TYPICAL END POST ELEVATION

INTERSTATE ROUTE H-1
GUARDRAIL AND SHOULDER IMPROVEMENTS
Airport Interchange to Middle Street
Federal Aid Project No. IM-H1-1(240)

SCALE: As Noted DATE: OCTOBER 2003

SHEET No. S17.4 OF 111 SHEETS

ORIGINAL PLAN | SURVEY PLOTTED BY | DRAWN BY | TRACED BY | DESIGNED BY | QUANTITIES BY | CHECKED BY | DATE | NOTE BOOK No.

FILE: PCGS174.DWG
PLOT: 1 = 1

\\Cad\ksf\2000\0066-H1 GUARDRAIL\11-05-03\PCGS1704.dwg, 11/5/2003 11:31:10 AM, KSFinc.pc3, 1:1

FED. ROAD DIST. NO.	STATE	FED. AID PROJ. NO.	FISCAL YEAR	SHEET NO.	TOTAL SHEETS
HAWAII	HAW.	IM-H1-1(240)	2004	116	143

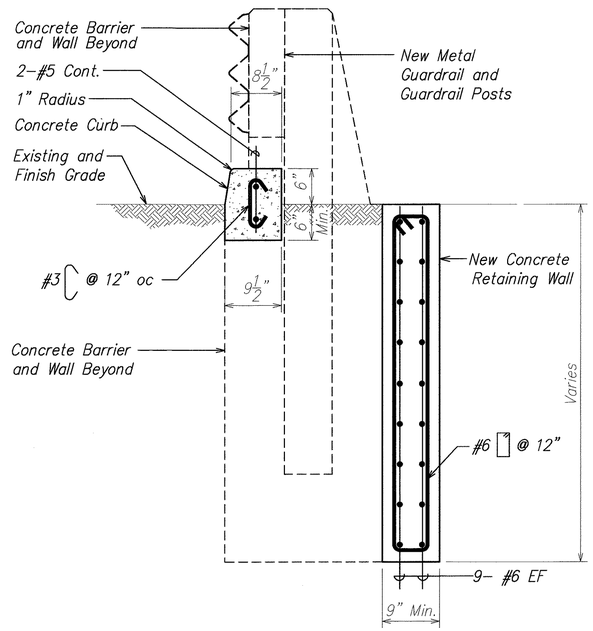

SECTION A
SCALE: 1" = 1'-0" S17.1 S17.5

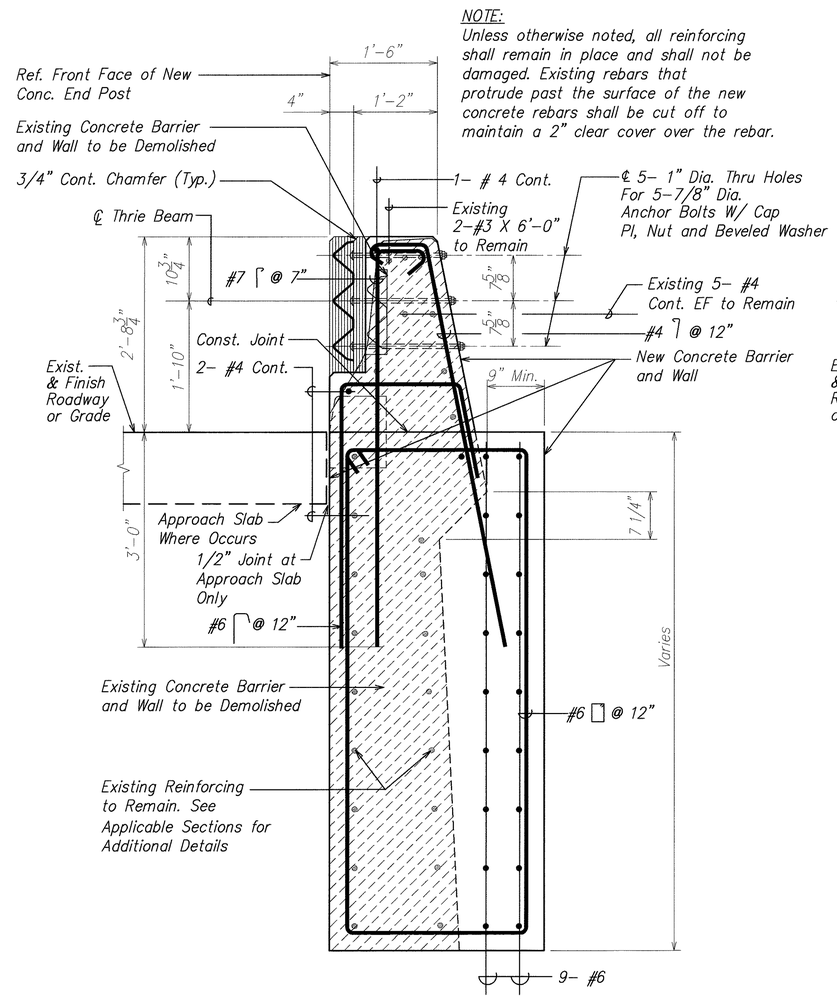

SECTION B
SCALE: 1" = 1'-0" S17.1 S17.5

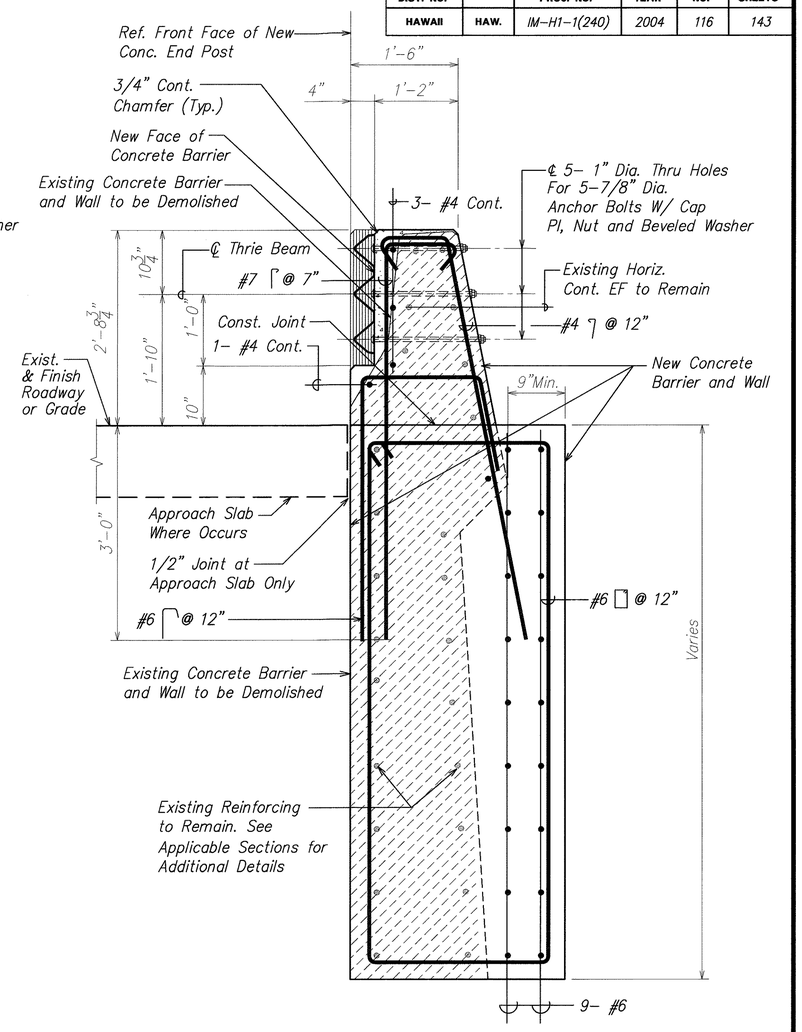

SECTION C
SCALE: 1" = 1'-0" S17.1 S17.5

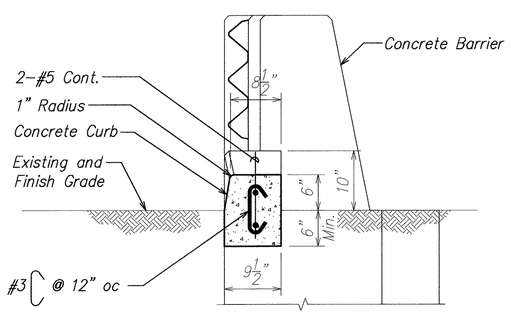

SECTION D
SCALE: 1" = 1'-0" S17.1 S17.5

ORIGINAL PLAN	SURVEY PLOTTED BY	DATE
	DRAWN BY	
	TRACED BY	
NOTE BOOK	DESIGNED BY	
	QUANTITIES BY	
No.	CHECKED BY	

DAVID K. FUJIWARA
LICENSED PROFESSIONAL ENGINEER
NO. 8104-S
HAWAII, U.S.A.

THIS WORK WAS PREPARED BY ME OR UNDER MY SUPERVISION.

SIGNATURE — EXPIRATION DATE OF THE LICENSE 4-30-04

STATE OF HAWAII
DEPARTMENT OF TRANSPORTATION
HIGHWAYS DIVISION

TYPICAL SECTIONS

INTERSTATE ROUTE H-1
GUARDRAIL AND SHOULDER IMPROVEMENTS
Airport Interchange to Middle Street
Federal Aid Project No. IM-H1-1(240)

SCALE: As Noted — DATE: OCTOBER 2003

SHEET No. S17.5 OF 111 SHEETS

FILE: PCG175.DWG
PLOT: 1 = 1

\\Cad1\ksf\2000\0066-H1 GUARDRAIL\11-05-03\PCGS1705.dwg, 11/5/2003 11:34:21 AM, KSFinc.pc3, 1:1

FED. ROAD DIST. NO.	STATE	FED. AID PROJ. NO.	FISCAL YEAR	SHEET NO.	TOTAL SHEETS
HAWAII	HAW.	IM-H1-1(240)	2004	117	143

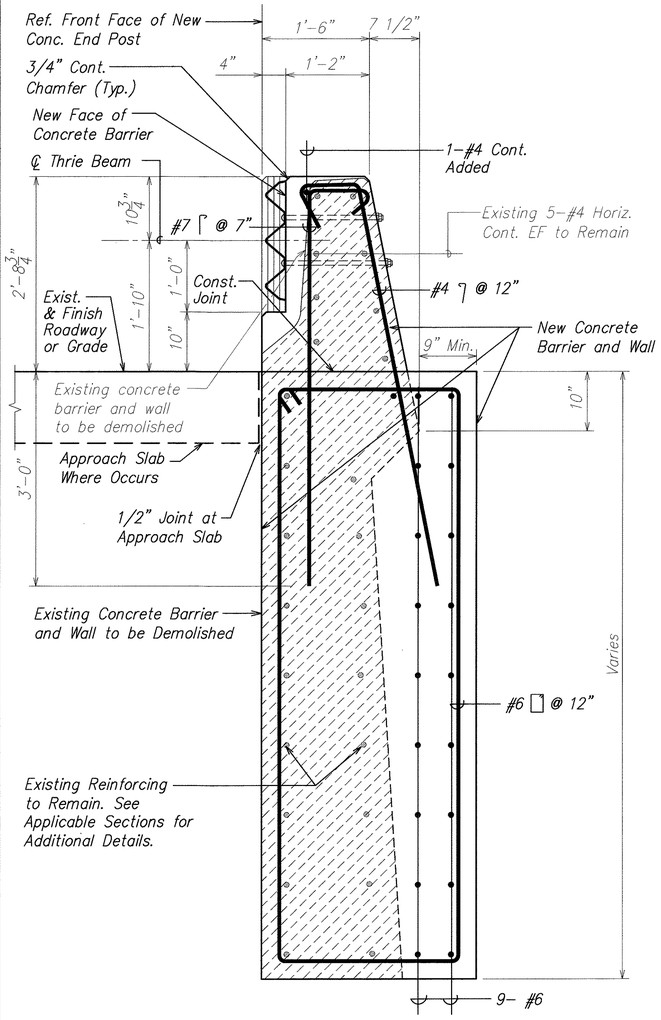

SECTION A
SCALE: 1" = 1'-0" S17.1 S17.6

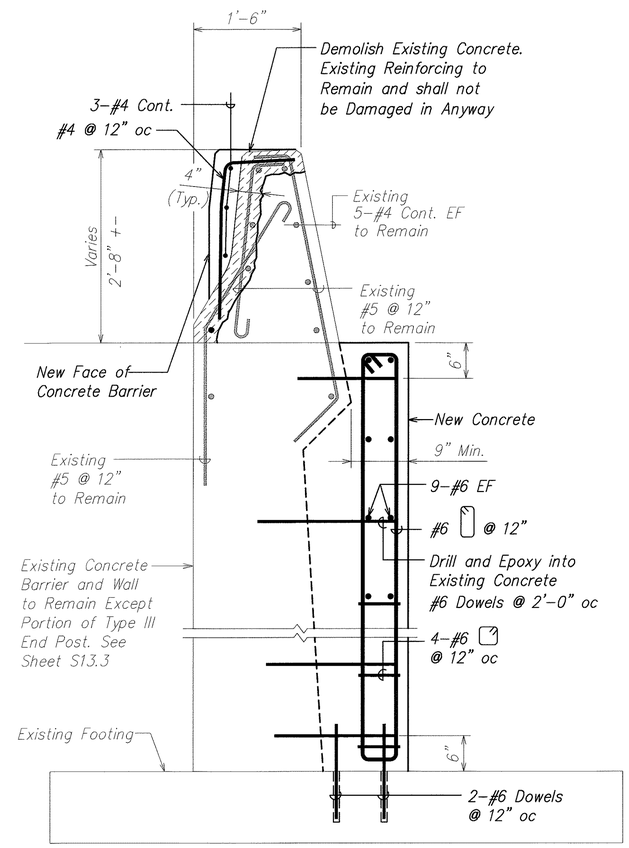

SECTION B
SCALE: 1" = 1'-0" S17.1 S17.6

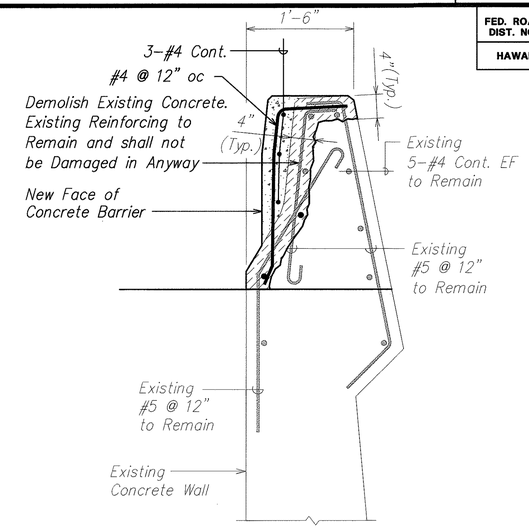

SECTION C
SCALE: 1" = 1'-0" S17.1 S17.6

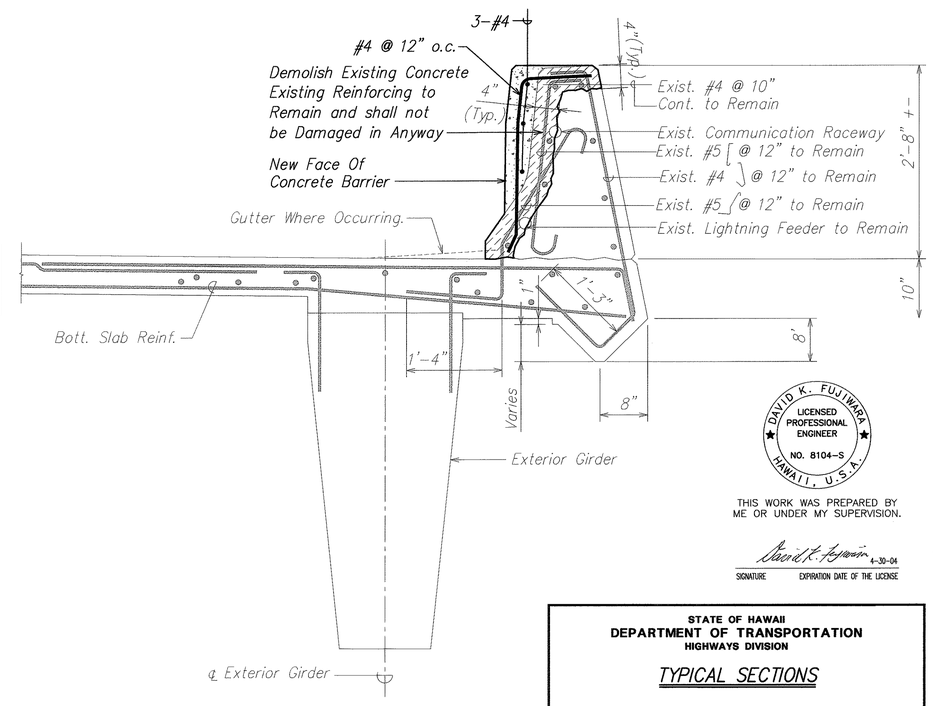

SECTION D
SCALE: 1" = 1'-0" S17.1 S17.6

DAVID K. FUJIWARA
LICENSED PROFESSIONAL ENGINEER
NO. 8104-S
HAWAII, U.S.A.

THIS WORK WAS PREPARED BY ME OR UNDER MY SUPERVISION.

SIGNATURE — EXPIRATION DATE OF THE LICENSE 4-30-04

STATE OF HAWAII
DEPARTMENT OF TRANSPORTATION
HIGHWAYS DIVISION

TYPICAL SECTIONS

INTERSTATE ROUTE H-1
GUARDRAIL AND SHOULDER IMPROVEMENTS
Airport Interchange to Middle Street
Federal Aid Project No. IM-H1-1(240)

SCALE: As Noted — DATE: OCTOBER 2003

SHEET No. S17.6 OF 111 SHEETS

ORIGINAL PLAN — NOTE BOOK No. ____
SURVEY PLOTTED BY ____ DATE ____
DRAWN BY ____
TRACED BY ____
DESIGNED BY ____
QUANTITIES BY ____
CHECKED BY ____

FILE: PCG176.DWG
PLOT: 1 = 1

\\Cad1\ksf\2000\0066-H1 GUARDRAIL\11-05-03\PCG5170S.dwg, 11/5/2003 11:34:40 AM, KSFinc.pc3, 1:1

FED. ROAD DIST. NO.	STATE	FED. AID PROJ. NO.	FISCAL YEAR	SHEET NO.	TOTAL SHEETS
HAWAII	HAW.	IM-H1-1(240)	2004	118	143

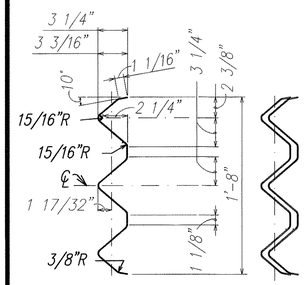

SINGLE DOUBLE

SECTION THRU RAIL ELEMENT

SCALE: 1 1/2 " = 1'-0"

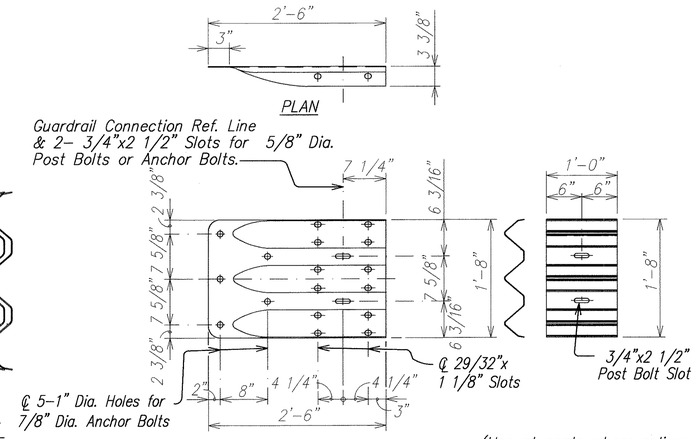

ELEVATION

TERMINAL CONNECTOR

SCALE: 1" = 1'-0"

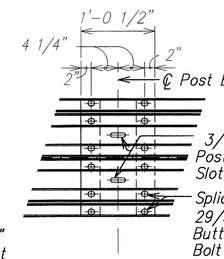

(Use at posts where splices do not occur.)

BACKUP PLATE

SCALE: 1" = 1'-0"

RAIL SPLICE

SCALE: 1" = 1'-0"

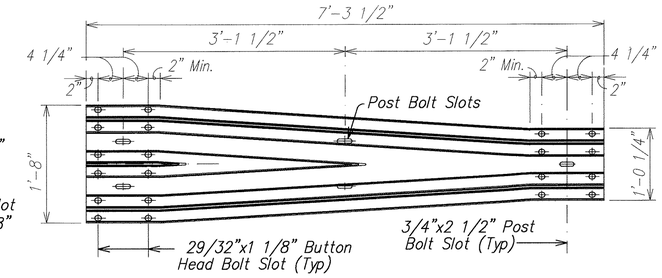

TRANSITION SECTION

SCALE: 1" = 1'-0"

NOTES:

1. For details not shown, see "DOT Standard Plans"
2. Bolt length varies and shall be verified in the field. Dimensions shown are approximate.

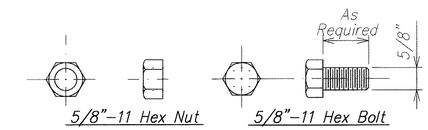

5/8"ø POST BOLT & NUT

SCALE: 6" = 1'-0"

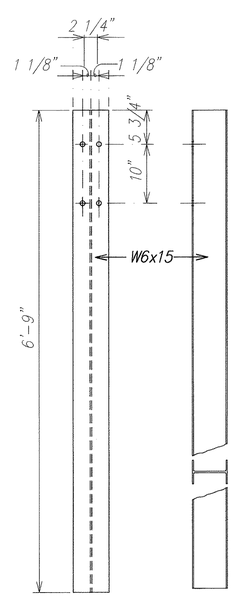

FRONT SIDE

POST DETAILS

SCALE: 1" = 1'-0"

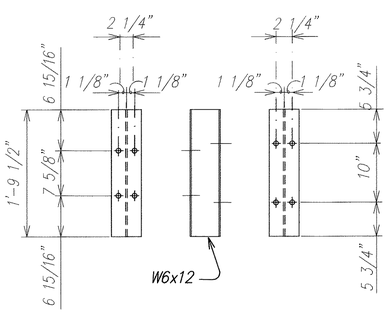

FRONT SIDE REAR

SPACER BLOCK DETAILS

SCALE: 1" = 1'-0"

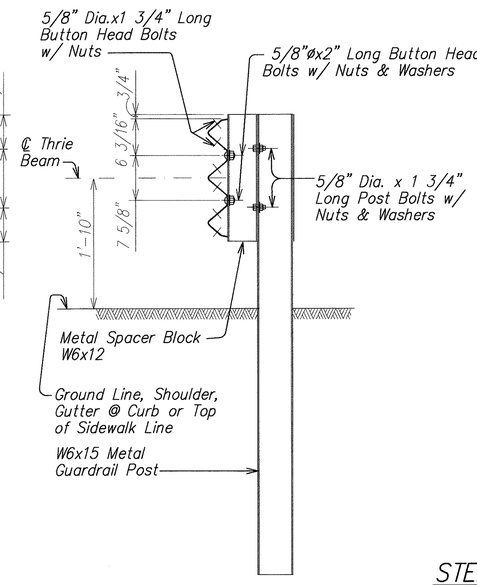

TYPICAL SECTION

METAL GUARDRAIL ON METAL POST
WITH METAL SPACER BLOCK

SCALE: 1" = 1'-0"

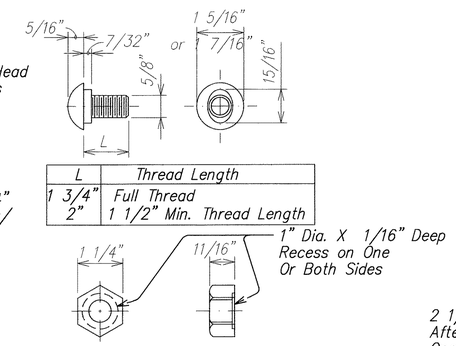

L	Thread Length
1 3/4"	Full Thread
2"	1 1/2" Min. Thread Length

5/8"ø BUTTON HEAD BOLT & RECESS NUT

SCALE: 6" = 1'-0"

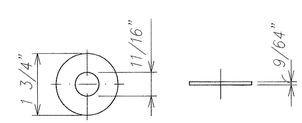

STEEL WASHER FOR 5/8"ø BOLT

SCALE: 6" = 1'-0"

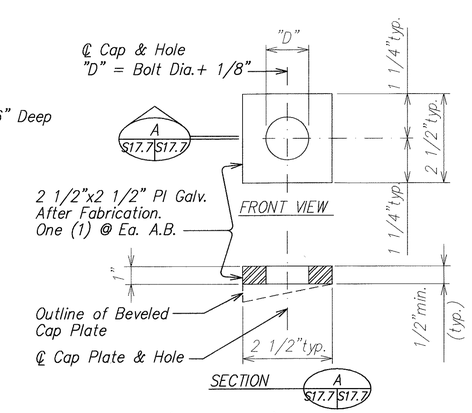

CAP (BEARING) PLATE DETAIL

SCALE: 6" = 1'-0"

DAVID K. FUJIWARA
LICENSED PROFESSIONAL ENGINEER
NO. 8104-S
HAWAII, U.S.A.

THIS WORK WAS PREPARED BY ME OR UNDER MY SUPERVISION.

4-30-04

SIGNATURE EXPIRATION DATE OF THE LICENSE

METAL GUARDRAIL TYPE 3 THRIE BEAM AND APPURTENANCES DETAILS

STATE OF HAWAII
DEPARTMENT OF TRANSPORTATION
HIGHWAYS DIVISION

TYPICAL GUARDRAIL DETAILS

INTERSTATE ROUTE H-1
GUARDRAIL AND SHOULDER IMPROVEMENTS
Airport Interchange to Middle Street
Federal Aid Project No. IM-H1-1(240)

SCALE: As Noted DATE: OCTOBER 2003

SHEET No. S17.7 OF 111 SHEETS

ORIGINAL PLAN	SURVEY PLOTTED BY	DATE
	DRAWN BY	
NOTE BOOK	TRACED BY	
	DESIGNED BY	
	QUANTITIES BY	
No.	CHECKED BY	

FILE: PCD177.DWG
PLOT: 1 = 1

\\Cad1\dsf1\2000\0066-H1 GUARDRAIL\11-05-03\PCGS1707.dwg, 11/5/2003 11:41:48 AM, KSFinc.pc3, 1:1

FED. ROAD DIST. NO.	STATE	FED. AID PROJ. NO.	FISCAL YEAR	SHEET NO.	TOTAL SHEETS
HAWAII	HAW.	IM-H1-1(240)	2004	119	143

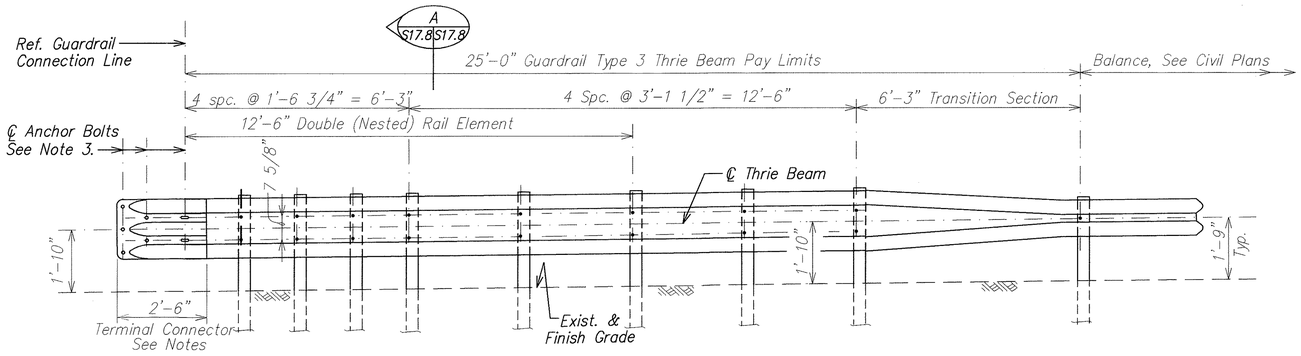

ELEVATION

TYPICAL TYPE 3 THRIE BEAM METAL GUARDRAIL FOR END POST

SCALE: 1/2 "=1'-0"

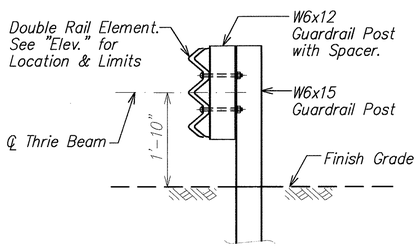

SECTION A S17.8 S17.8

Scale: 3/4 "=1'-0"

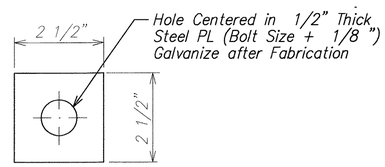

CAP PLATE DETAIL

Scale: 6" = 1'-0"

NOTES:

1. The work necessary to connect guardrail to concrete end post shall include all labor, materials, tools, equipment and incidentals necessary to complete the work and shall be incidental to Item No. 606.3112, Guardrail Type 3 Thrie Beam on Steel Post and will not be paid for separately.
2. All anchor bolts shall be high strength bolts conforming to the requirements of AASHTO M 164. See Special Provisions.
3. Anchor bolt length shall be such that a snug fit of the elements and full thread engagement plus 1/4 " (max) is attained.
4. Terminal connector, Thrie Beam Metal Guardrail and Transition Section shall be fabricated from 10 gauge steel conforming to the requirements of AASHTO M 180 and shall be hot-dip galvanized after fabrication. See Special Provisions.
5. Guardrail post and spacer block including all anchor bolts, cap PL, bolts, nuts, and washers shall be hot-dip galvanized after fabrication.
6. Cap PL shall be fabricated from ASTM A 36.
7. First 25'-0" of guardrail adjoining "Terminal Connector" shall be galvanized steel and supports spaced as shown on the detail drawings. This section of rail shall be placed on tangent to end post or parallel to roadway, unless conditions at site renders it impossible to do so. Flare point to be determined in field.
8. Double (nest 1st panel) thrie beam elements at all end post connections.
9. Where double (nested) beam occur, 12" "Back-up Plate" not required.
10. Heads of through anchor bolts shall be placed on the traffic side of the rail.
11. Drilling of through holes shall be done in such a manner as to prevent cone puncturing of the daylighting end.
12. Lap terminal connector and rail element in direction of traffic to prevent snagging.

ORIGINAL PLAN	SURVEY PLOTTED BY	DATE
	DRAWN BY	"
	TRACED BY	"
NOTE BOOK	DESIGNED BY	"
	QUANTITIES BY	"
No.	CHECKED BY	"

DAVID K. FUJIWARA LICENSED PROFESSIONAL ENGINEER NO. 8104-S HAWAII, U.S.A.

THIS WORK WAS PREPARED BY ME OR UNDER MY SUPERVISION.

SIGNATURE — EXPIRATION DATE OF THE LICENSE 4-30-04

STATE OF HAWAII
DEPARTMENT OF TRANSPORTATION
HIGHWAYS DIVISION

TYPICAL GUARDRAIL DETAILS

INTERSTATE ROUTE H-1
GUARDRAIL AND SHOULDER IMPROVEMENTS
Airport Interchange to Middle Street
Federal Aid Project No. IM-H1-1(240)

SCALE: As Noted — DATE: OCTOBER 2003

SHEET No. S17.8 OF 111 SHEETS

FILE: PCG178.DWG
PLOT: 1 = 1

\\Cad1\xsf\2000\0066-H1 GUARDRAIL\11-05-03\PCGS178.dwg, 11/5/2003 11:42:37 AM, KSFinc.pc3, 1:1

FED. ROAD DIST. NO.	STATE	FED. AID PROJ. NO.	FISCAL YEAR	SHEET NO.	TOTAL SHEETS
HAWAII	HAW.	IM-H1-1(240)	2004	120	143

TERMINAL IMPACT ATTENUATOR NOTES:

1. The existing bridge decks contain significant amounts of reinforcing. The location of the anchor bolts may have to be changed. The contractor shall devise ways of installing the required number of anchor bolts without damaging the existing reinforcing or detrimentally harming the structure. The contractor shall submit a work plan and details on how he is to install the anchor bolts and the attenuator system to the Engineer for approval.

2. The anchor bolts that are drilled and epoxied into the concrete shall have a capacity that is provided by the manufacturer of the epoxy and bolt system. This value shall be reduced according to the manufacturer's recommendations depending on the embedment depth, spacing, etc. of the bolts. This bolt capacity with reductions if applicable shall be used when designing the anchor bolts for the attenuator system.

3. Slab on grade pads shown in the drawings may be used if it satisfies all the requirements of the manufacturer. Alternate slab on grade pads of different sizes and with different details may be used. These pads shall meet all manufacturer's recommendations and shall be approved by the Engineer.

4. The new attenuator system shall not damage or hinder the performance of all existing joints (expansion, contraction, etc.) in any way.

5. Holes in which reinforcing is encountered or which are not used shall be filled with epoxy grout.

6. Coordinate anchor bolt hole locations for the attenuator and anchor bolt locations in the existing concrete. Measures shall be taken to insure the anchor bolts are installed to the satisfaction of the manufacturers.

7. Installation of attenuators, materials, and all other related materials and work shall be in accordance with the Manufacturer's recommendations.

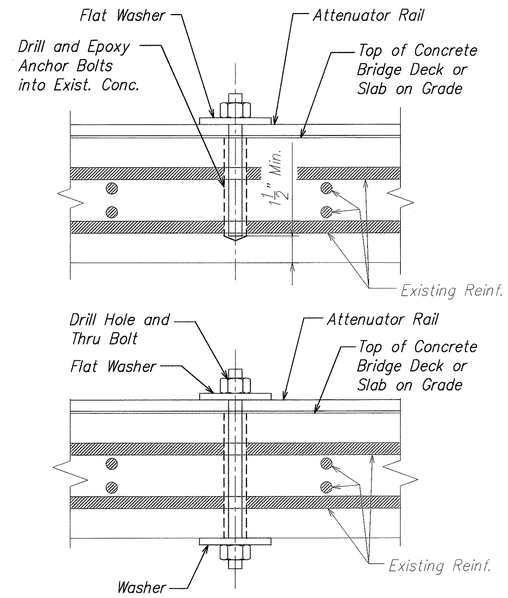

TYPICAL ATTENUATOR CONNECTION DETAILS (1 / S18.1 S18.1)

SCALE: 3" = 1'-0"

Attenuator Number	Design Speed	Test Load
I	65 mph	TL-3
II	35 mph	TL-2
III	35 mph	TL-2
IV	35 mph	TL-2
V	35 mph	TL-2
VI	65 mph	TL-3
VII	35 mph	TL-2
VIII	55 mph	TL-3
IX	55 mph	TL-3
X	45 mph	TL-3
XI	55 mph	TL-3
XII	45 mph	TL-3
XIII	55 mph	TL-3
XIV	65 mph	TL-3

TABLE I

Design Speed on Main Line (mph)	Maximum Dimensions for Terminal Impact Attenuator (Feet)		
	N	L	F
30	8	11	3
50	8	25	3
70	8	45	3
80	8	55	3

NOTE:

1. The attenuator shall be limited to the dimensions on Table I.

2. The minimum height of the attenuator shall be 32".

3. No curbs, raised pavement, or prows to be built or to remain in the area surrounding or occupied by the crash cushion.

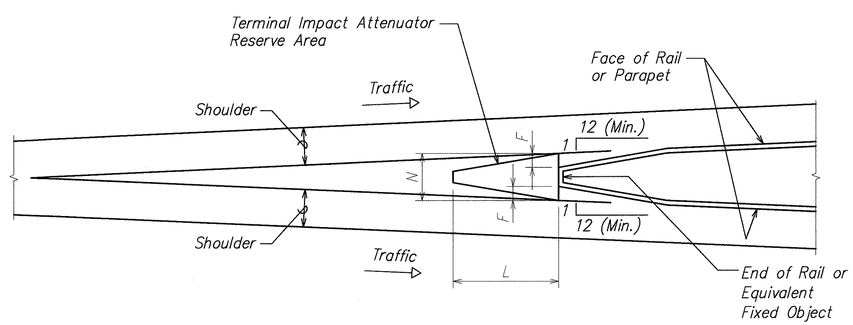

DAVID K. FUJIWARA LICENSED PROFESSIONAL ENGINEER NO. 8104-S HAWAII, U.S.A.

THIS WORK WAS PREPARED BY ME OR UNDER MY SUPERVISION.

SIGNATURE — EXPIRATION DATE OF THE LICENSE 4-30-04

STATE OF HAWAII
DEPARTMENT OF TRANSPORTATION
HIGHWAYS DIVISION

QUADGUARD NOTES AND DETAILS
INTERSTATE ROUTE H-1
GUARDRAIL AND SHOULDER IMPROVEMENTS
Airport Interchange to Middle Street
Federal Aid Project No. IM-H1-1(240)

SCALE: As Noted — DATE: OCTOBER 2003

SHEET No. S18.1 OF 111 SHEETS

ORIGINAL PLAN — SURVEY PLOTTED BY — DATE — TRACING BY — TRACED BY — NOTE BOOK — DESIGNED BY — QUANTITIES BY — CHECKED BY — No.

FILE: PCG-S181
PLOT: 1 = 1

\\Cad1\xsf\2000\0066-H1 GUARDRAIL\11-05-03\PCGS1801.dwg, 11/5/2003 11:43:21 AM, KSFinc.pc3, 1:1

FED. ROAD DIST. NO.	STATE	FED. AID PROJ. NO.	FISCAL YEAR	SHEET NO.	TOTAL SHEETS
HAWAII	HAW.	IM-H1-1(240)	2004	ADD. 121	143

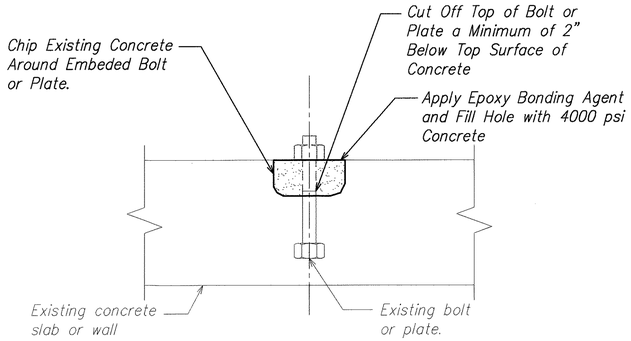

TYPICAL DETAIL FOR REMOVAL OF EXISTING EMBEDMENTS

SCALE: 3" = 1'-0"

1 S18.2 | S18.2

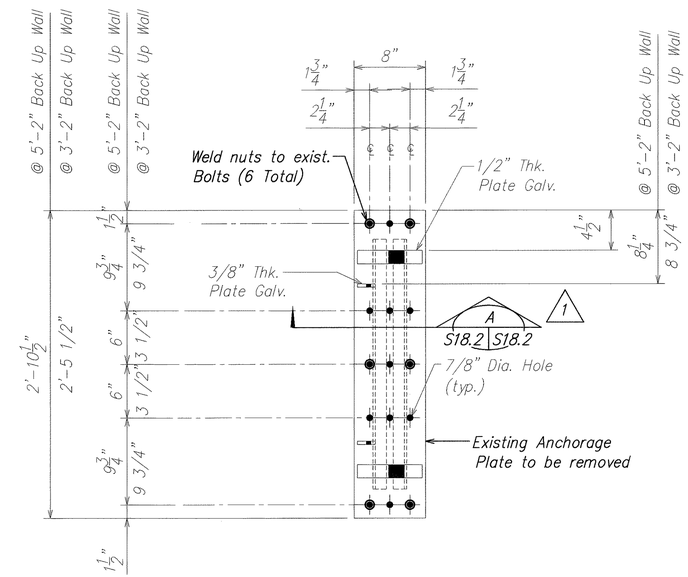

EXISTING ANCHORAGE ASSYM. SECTION

SCALE: 1 1/2"=1'-0"

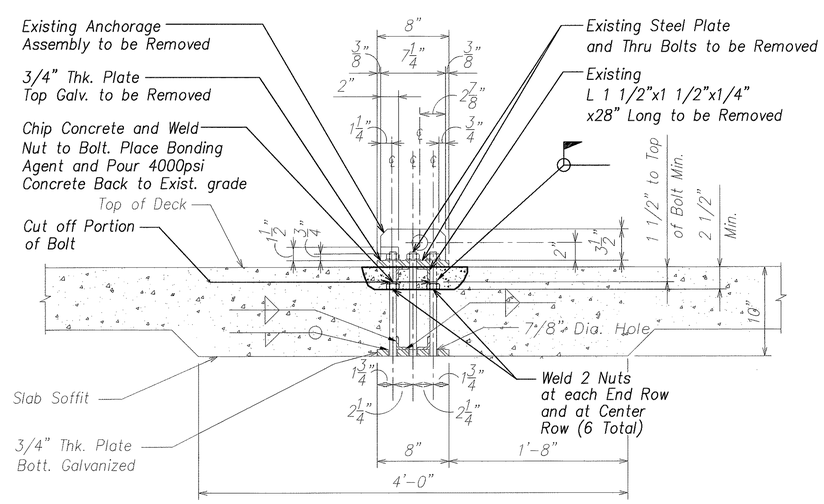

SECTION

SCALE: 1 1/2"=1'-0"

A S18.2 | S18.2

TYPICAL DETAIL FOR REMOVAL OF ANCHORAGE PLATE OR THRU BOLT

SCALE: 1 1/2" = 1'-0"

2 S18.2 | S18.2

NOTES:

1. The cost of removal and disposal of existing material and patching of concrete shall be considered incidental to Section 693 of the Special Provisions – Terminal Impact Attenuator.
2. The size, shape, and number of bolts, plates, and embedments vary. The Contractor shall verify actual site conditions.

DAVID K. FUJIWARA LICENSED PROFESSIONAL ENGINEER NO. 8104-S HAWAII, U.S.A.

THIS WORK WAS PREPARED BY ME OR UNDER MY SUPERVISION.

SIGNATURE — EXPIRATION DATE OF THE LICENSE 4-30-04

DATE	REVISION
12/09/03	1 Revise Section Cut

STATE OF HAWAII
DEPARTMENT OF TRANSPORTATION
HIGHWAYS DIVISION

TYPICAL DETAILS

INTERSTATE ROUTE H-1
GUARDRAIL AND SHOULDER IMPROVEMENTS
Airport Interchange to Middle Street
Federal Aid Project No. IM-H1-1(240)

SCALE: As Noted — DATE: OCTOBER 2003

SHEET No. S18.2 OF 111 SHEETS

ADD. 121

ORIGINAL PLAN	SURVEY PLOTTED BY	DATE
	DRAFT BY	
	TRACED BY	
NOTE BOOK	DESIGNED BY	
	QUANTITIES BY	
No.	CHECKED BY	

FILE: PCGS182.DWG
PLOT: 1 = 1

\\Cad1\vol\2000\0066-H1 GUARDRAIL\12-08-03 ADD1\ADD1 PCGS1802.dwg, 12/8/2003 9:30:16 AM, KSFinc.pc3, 1:1