FED. ROAD DIST. NO.	STATE	FED. AID PROJ. NO.	FISCAL YEAR	SHEET NO.	TOTAL SHEETS
HAWAII	HAW.	IM-H1-1(234)	2000	63	557

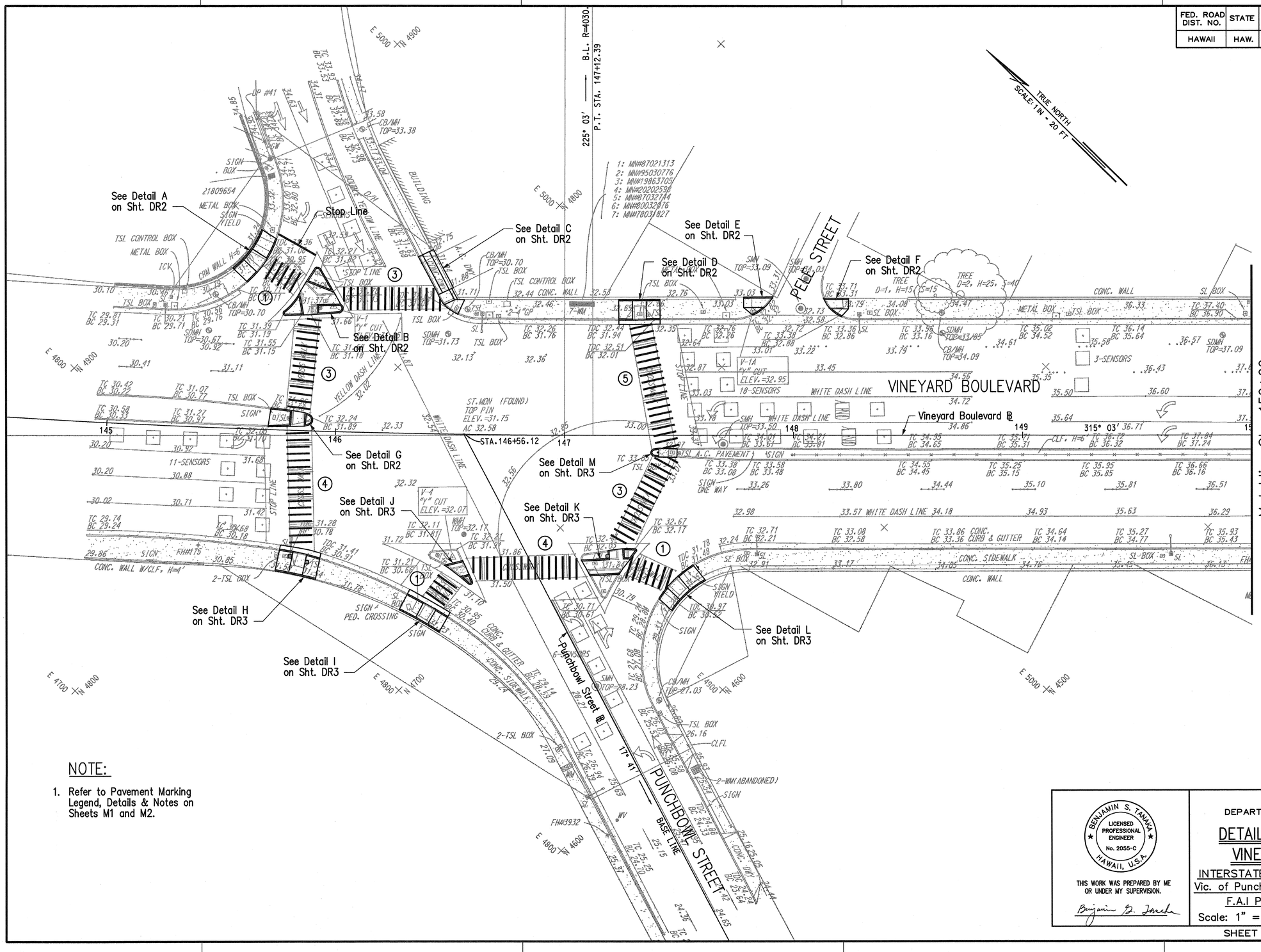

NOTE:

1. Refer to Pavement Marking Legend, Details & Notes on Sheets M1 and M2.

ORIGINAL PLAN		
	SURVEY PLOTTED BY	DATE
	DRAWN BY	
	TRACED BY	
NOTE BOOK	DESIGNED BY	
	QUANTITIES BY	
No.	CHECKED BY	

BENJAMIN S. TANAKA
LICENSED PROFESSIONAL ENGINEER
No. 2055-C
HAWAII, U.S.A.

THIS WORK WAS PREPARED BY ME OR UNDER MY SUPERVISION.

Benjamin S. Tanaka

STATE OF HAWAII
DEPARTMENT OF TRANSPORTATION
HIGHWAYS DIVISION

DETAILED ROADWAY PLAN
VINEYARD BOULEVARD

INTERSTATE ROUTE H-1 RESURFACING
Vic. of Punchbowl Off Ramp to Kapiolani IC
F.A.I Project No. IM-H1-1(234)

Scale: 1" = 20' Date: June 1, 1999

SHEET No. DR1 OF 54 SHEETS

J:\hl-surf\vineyard\align\a-v-01.dgn Tue May 25 09:46:25 1999

FED. ROAD DIST. NO.	STATE	FED. AID PROJ. NO.	FISCAL YEAR	SHEET NO.	TOTAL SHEETS
HAWAII	HAW.	IM-H1-1(234)	2000	64	557

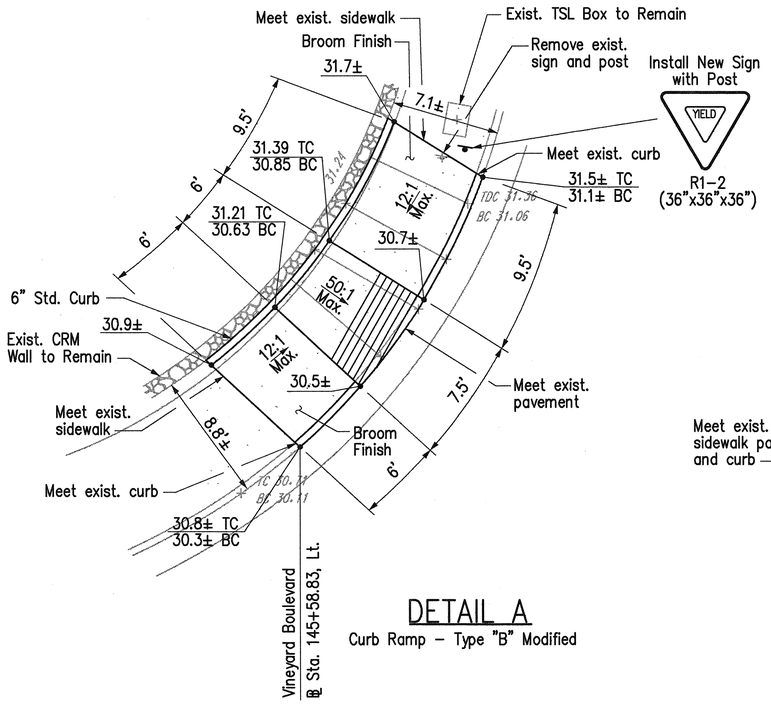

DETAIL A

Curb Ramp – Type "B" Modified

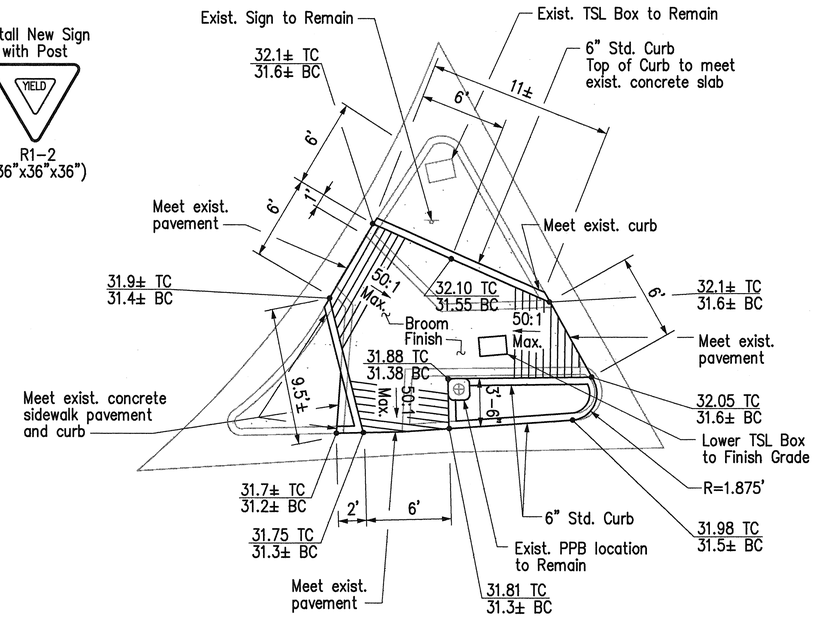

DETAIL B

Curb Ramp – Type "C" Modified

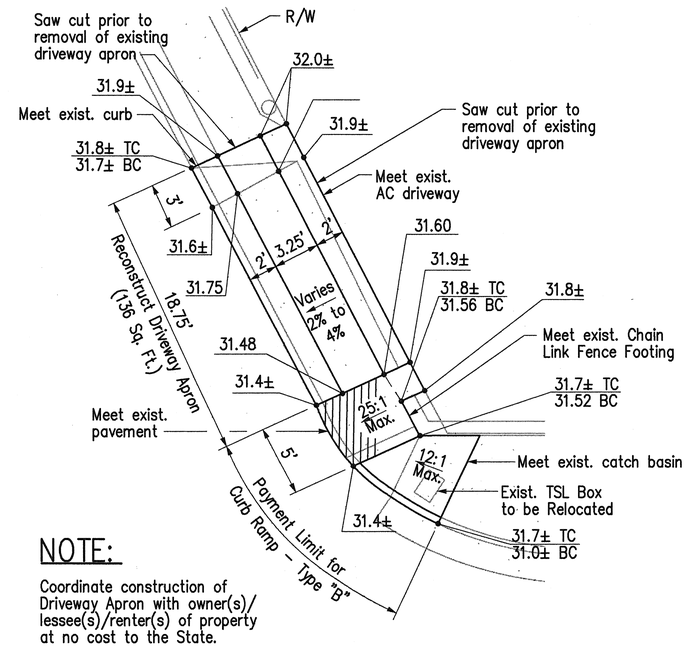

NOTE:

Coordinate construction of Driveway Apron with owner(s)/ lessee(s)/renter(s) of property at no cost to the State.

DETAIL C

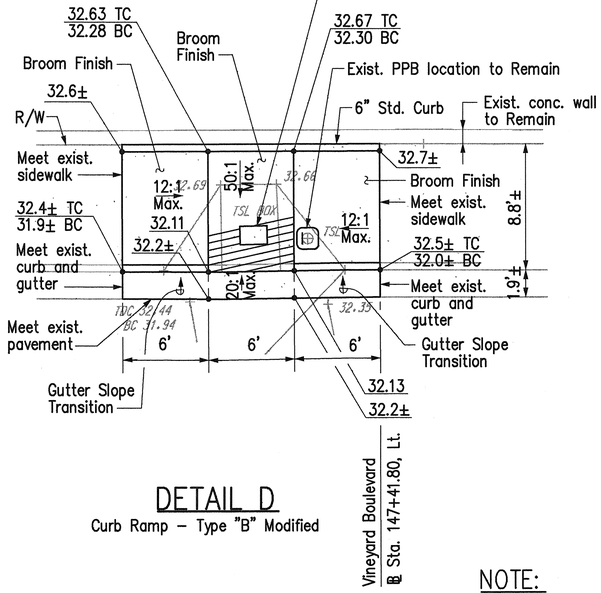

DETAIL D

Curb Ramp – Type "B" Modified

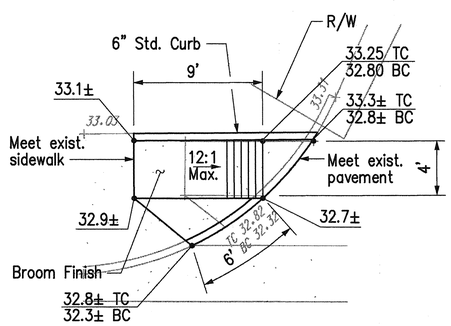

DETAIL E

Curb Ramp – Type "D"

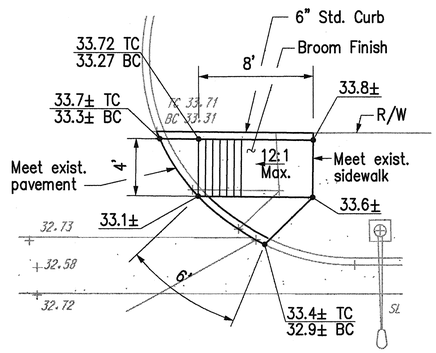

DETAIL F

Curb Ramp – Type "D"

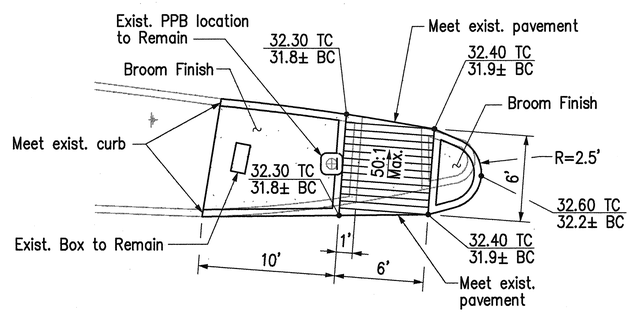

DETAIL G

Curb Ramp – Type "C"

NOTE:

1. Refer to Sheets CR-1 to CR-4 for Typical Curb Ramp Details.

ORIGINAL PLAN	SURVEY PLOTTED BY	DATE
	DRAWN BY	
	TRACED BY	
NOTE BOOK	DESIGNED BY	
	QUANTITIES BY	
No.	CHECKED BY	

BENJAMIN S. TANAKA
LICENSED PROFESSIONAL ENGINEER
No. 2055-C
HAWAII, U.S.A.

THIS WORK WAS PREPARED BY ME OR UNDER MY SUPERVISION.

STATE OF HAWAII
DEPARTMENT OF TRANSPORTATION
HIGHWAYS DIVISION

DETAILED ROADWAY PLAN
VINEYARD BOULEVARD
INTERSTATE ROUTE H-1 RESURFACING
Vic. of Punchbowl Off Ramp to Kapiolani IC
F.A.I Project No. IM-H1-1(234)

Scale: 1" = 5' Date: June 1, 1999

SHEET No. DR2 OF 54 SHEETS

j:\hl-surf\vineyard\align\a-v-03.dgn Tue May 25 09:49:00 1999

FED. ROAD DIST. NO.	STATE	FED. AID PROJ. NO.	FISCAL YEAR	SHEET NO.	TOTAL SHEETS
HAWAII	HAW.	IM-H1-1(234)	2000	65	557

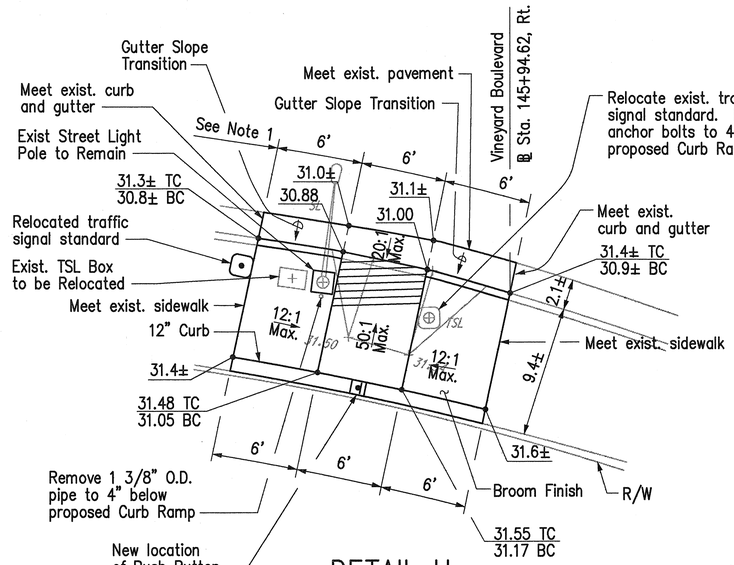

DETAIL H

Curb Ramp – Type "B" Modified

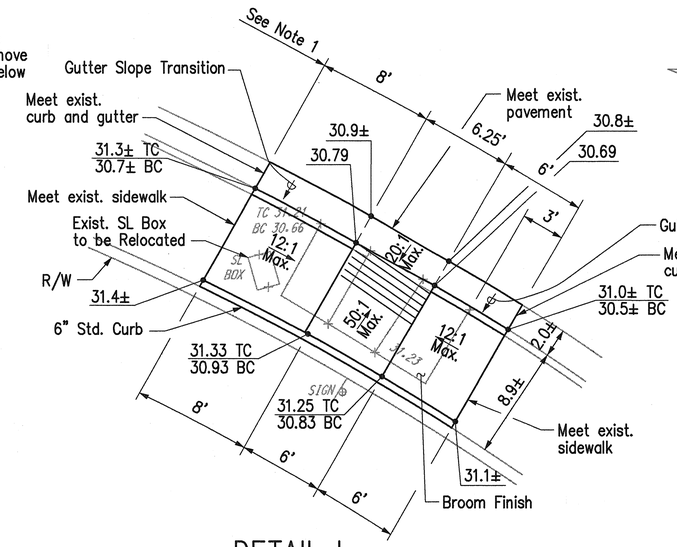

DETAIL I

Curb Ramp – Type "B" Modified

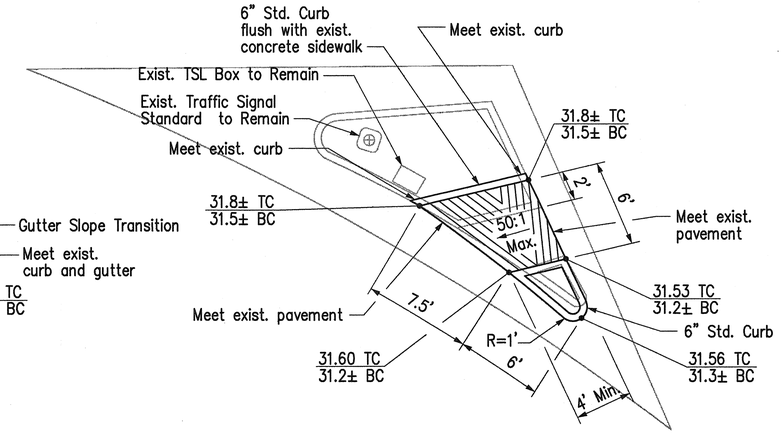

DETAIL J

Curb Ramp – Type "C"

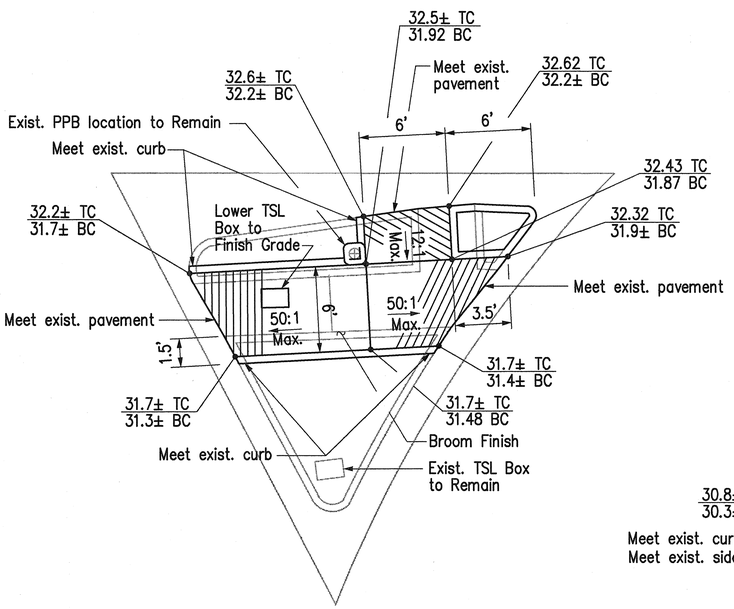

DETAIL K

Curb Ramp – Type "C" Modified

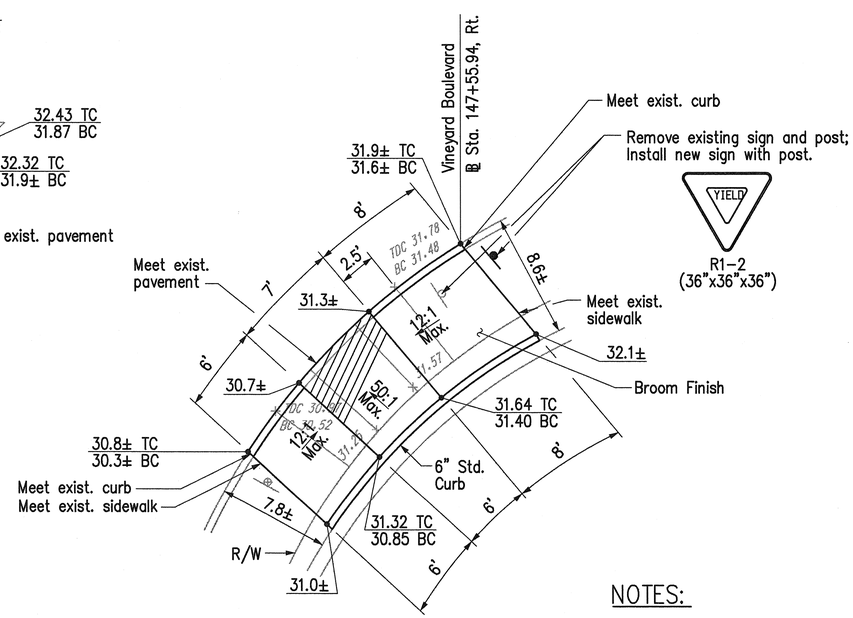

DETAIL L

Curb Ramp – Type "B" Modified

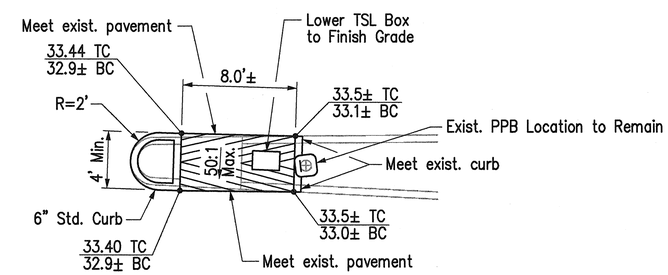

DETAIL M

Curb Ramp – Type "C"

NOTES:

1. Dimensions are measured along curb face.
2. Refer to Sheets CR-1 to CR-4 for Typical Curb Ramp Details.

BENJAMIN S. TANAKA
LICENSED PROFESSIONAL ENGINEER
No. 2055-C
HAWAII, U.S.A.

THIS WORK WAS PREPARED BY ME OR UNDER MY SUPERVISION.

Benjamin S. Tanaka

STATE OF HAWAII
DEPARTMENT OF TRANSPORTATION
HIGHWAYS DIVISION

DETAILED ROADWAY PLAN
VINEYARD BOULEVARD

INTERSTATE ROUTE H-1 RESURFACING
Vic. of Punchbowl Off Ramp to Kapiolani IC
F.A.I Project No. IM-H1-1(234)
Scale: 1" = 5' Date: June 1, 1999

SHEET No. DR3 OF 54 SHEETS

ORIGINAL PLAN | SURVEY PLOTTED BY | DRAFT BY | TRACED BY | DESIGNED BY | QUANTITIES BY | CHECKED BY | DATE | NOTE NOCE | No.

j:\hl-surf\vineyard\align\a-v-04.dgn Tue Jul 20 11:38:30 1999

FED. ROAD DIST. NO.	STATE	FED. AID PROJ. NO.	FISCAL YEAR	SHEET NO.	TOTAL SHEETS
HAWAII	HAW.	IM-H1-1(234)	2000	66	557

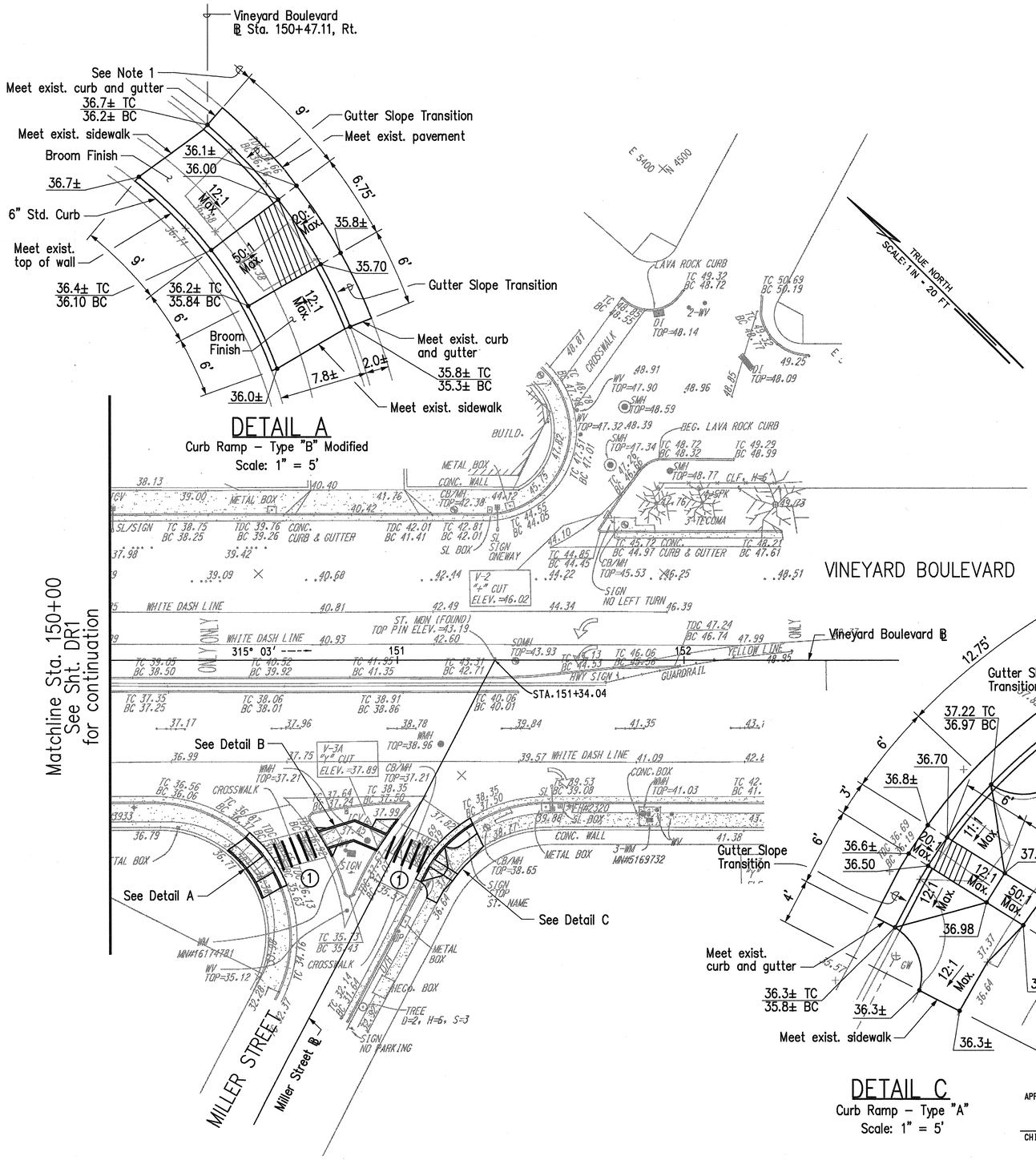

DETAIL A

Curb Ramp – Type "B" Modified

Scale: 1" = 5'

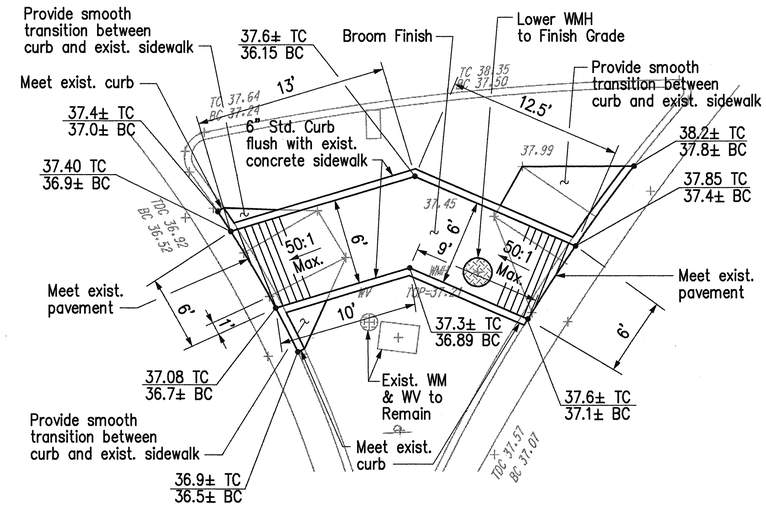

DETAIL B

Curb Ramp – Type "C" Modified

Scale: 1" = 5'

NOTES:

1. Dimensions are measured along curb face.
2. Refer to Sheets CR-1 to CR-4 for Typical Curb Ramp Details.
3. Refer to Pavement Marking Legend, Details & Notes on Sheets M1 and M2.

DETAIL C

Curb Ramp – Type "A"

Scale: 1" = 5'

APPROVED:

CHIEF, PLANNING & ENGINEERING DIVISION, BWS DATE

BENJAMIN S. TANAKA LICENSED PROFESSIONAL ENGINEER No. 2055-C HAWAII, U.S.A.

THIS WORK WAS PREPARED BY ME OR UNDER MY SUPERVISION.

STATE OF HAWAII
DEPARTMENT OF TRANSPORTATION
HIGHWAYS DIVISION

DETAILED ROADWAY PLAN
VINEYARD BOULEVARD

INTERSTATE ROUTE H-1 RESURFACING
Vic. of Punchbowl Off Ramp to Kapiolani IC
F.A.I Project No. IM-H1-1(234)

Scale: 1" = 20' Date: June 1, 1999

SHEET No. DR4 OF 54 SHEETS

ORIGINAL PLAN | SURVEY PLOTTED BY | DRAWN BY | TRACED BY | DESIGNED BY | NOTE BOOK | QUANTITIES BY | No. | CHECKED BY | DATE

J:\hl-surf\vineyard\align\a-v-02.dgn Tue May 25 09:52:03 1999

FED. ROAD DIST. NO.	STATE	FED. AID PROJ. NO.	FISCAL YEAR	SHEET NO.	TOTAL SHEETS
HAWAII	HAW.	IM-H1-1(234)	2000	67	557

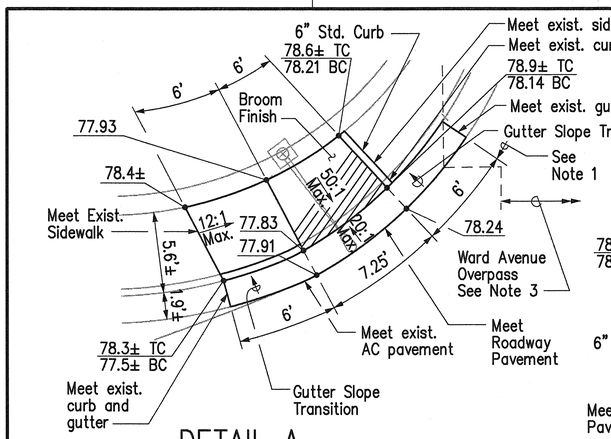

DETAIL A

Curb Ramp – Type "B"
Scale: 1" = 5'

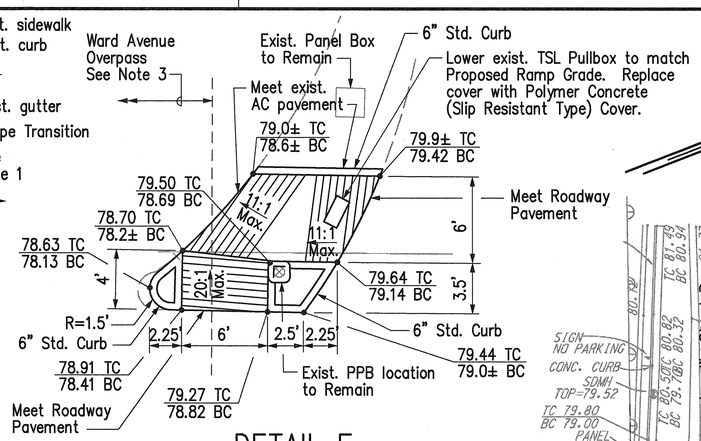

DETAIL E

Curb Ramp – Type "C" Modified
Scale: 1" = 5'

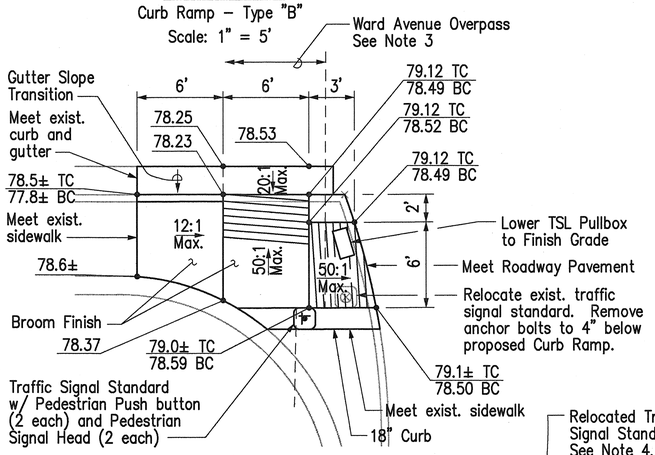

DETAIL C

Curb Ramp – Type "E"
Scale: 1" = 5'

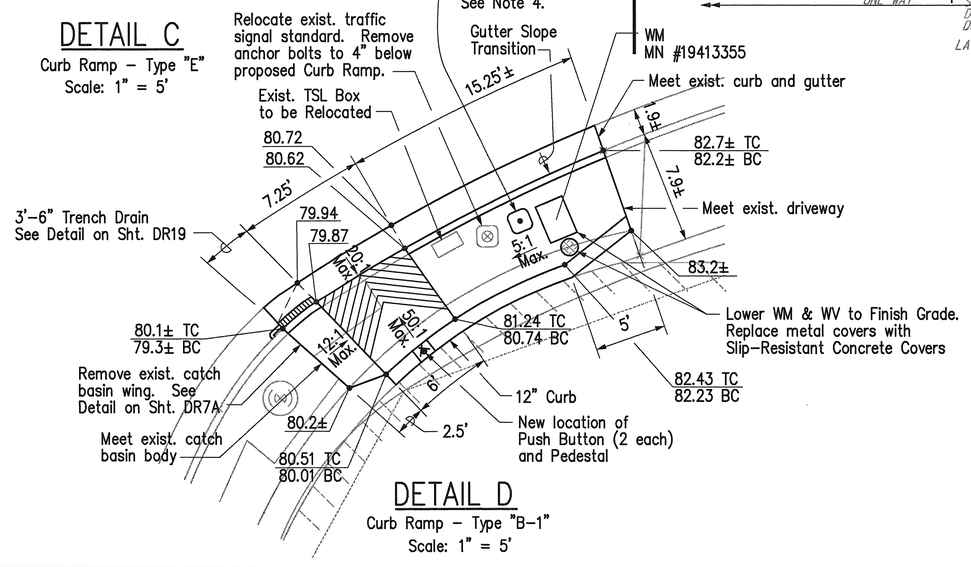

DETAIL D

Curb Ramp – Type "B-1"
Scale: 1" = 5'

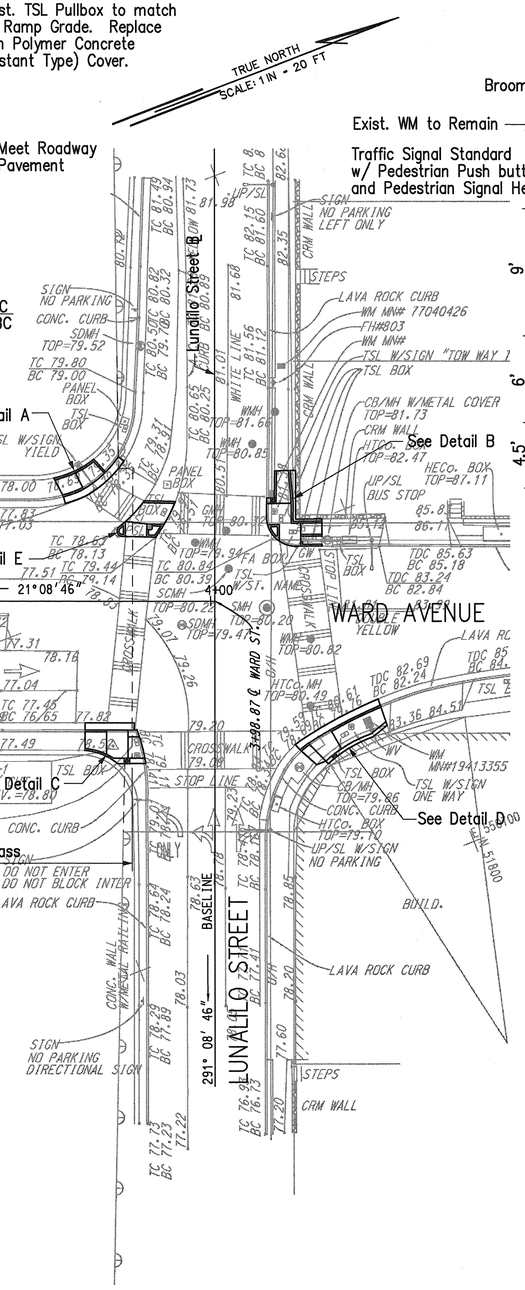

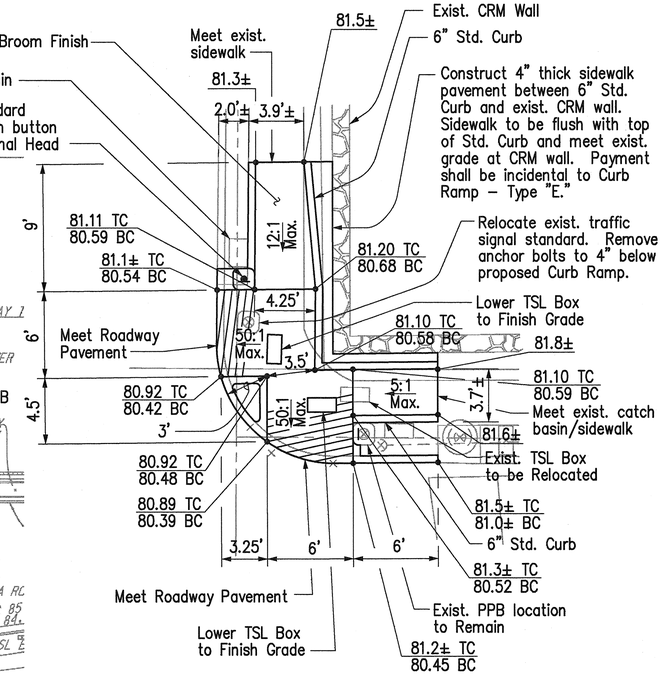

DETAIL B

Curb Ramp – Type "E"
Scale: 1" = 5'

NOTES:

1. Dimensions are measured along curb face.
2. Refer to Sheets DR19 and CR-1 to CR-4 for Typical Curb Ramp Details.
3. Refer to Sheet DR20 for Curb Ramp and Gutter Reconstruction on Ward Avenue Overpass.
4. Maintain 3' min. clr. between base of Relocated Traffic Signal Standard and face of 12" curb.

APPROVED:

CHIEF, PLANNING & ENGINEERING DIVISION, BWS DATE

BENJAMIN S. TANAKA
LICENSED PROFESSIONAL ENGINEER
No. 2055-C
HAWAII, U.S.A.

THIS WORK WAS PREPARED BY ME OR UNDER MY SUPERVISION.

STATE OF HAWAII
DEPARTMENT OF TRANSPORTATION
HIGHWAYS DIVISION

DETAILED ROADWAY PLAN
WARD AVENUE

INTERSTATE ROUTE H-1 RESURFACING
Vic. of Punchbowl Off Ramp to Kapiolani IC
F.A.I Project No. IM-H1-1(234)
Scale: 1" = 20' Date: June 1, 1999

SHEET No. DR5 OF 54 SHEETS

ORIGINAL PLAN	SURVEY PLOTTED BY	DATE
	TRACED BY	
	PLANS BY	
NOTE BOOK	DESIGNED BY	
	QUANTITIES BY	
No.	CHECKED BY	

J:\hl-surf\ward\altgn\a-w-01.dgn Tue Jul 20 11:32:29 1999

FED. ROAD DIST. NO.	STATE	FED. AID PROJ. NO.	FISCAL YEAR	SHEET NO.	TOTAL SHEETS
HAWAII	HAW.	IM-H1-1(234)	2000	68	557

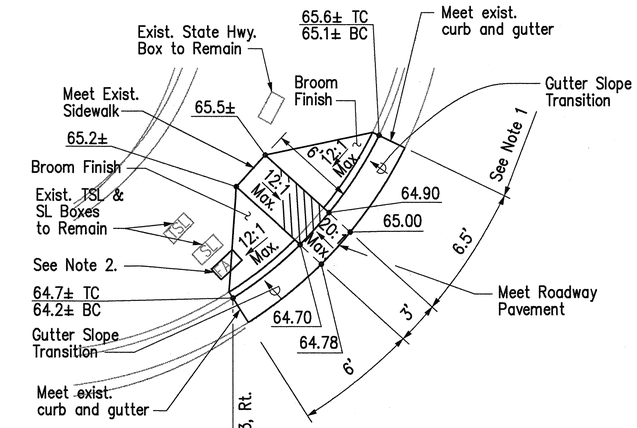

DETAIL A

Curb Ramp – Type "A"
Scale: 1" = 5'

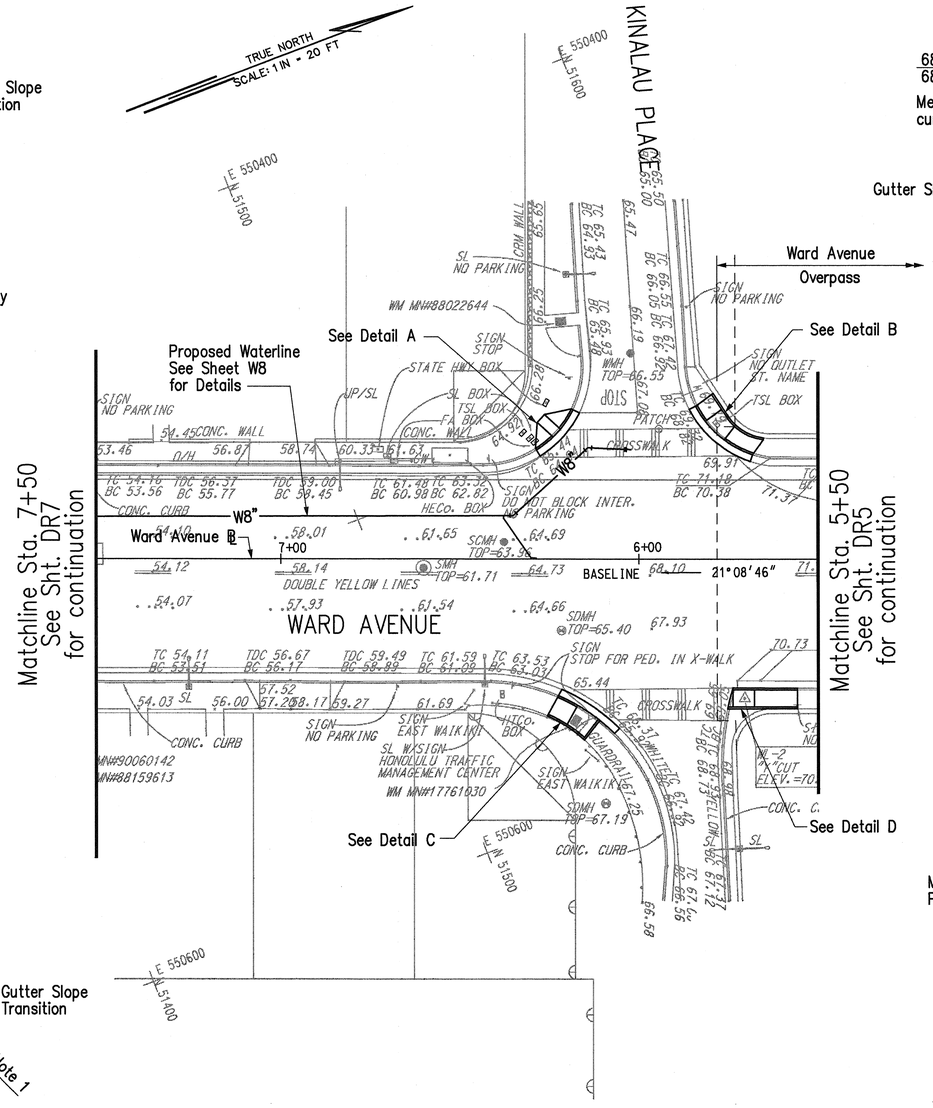

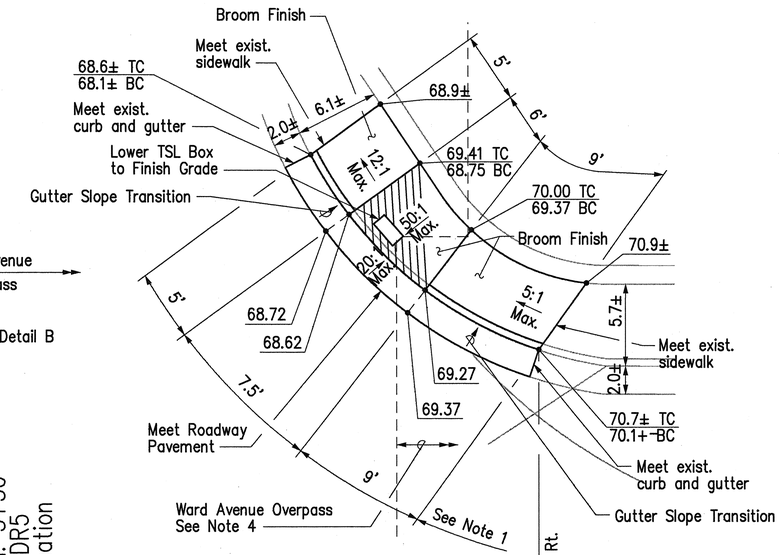

DETAIL B

Curb Ramp – Type "B"
Scale: 1" = 5'

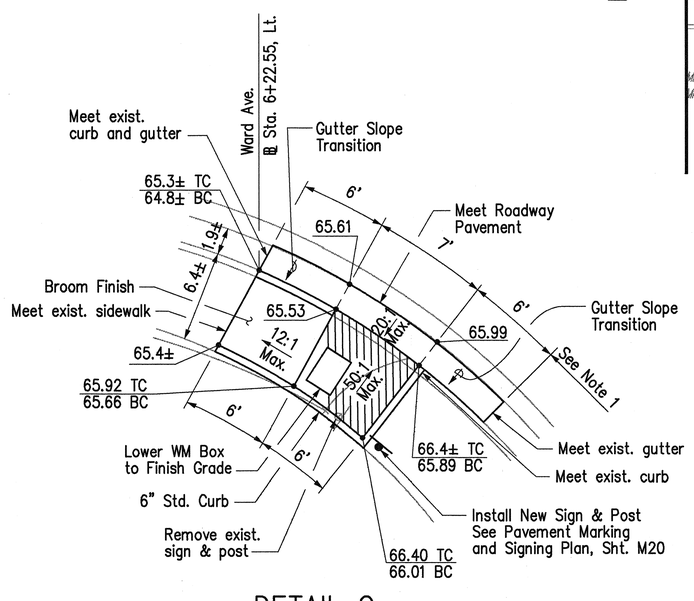

DETAIL C

Curb Ramp – Type "B"
Scale: 1" = 5'

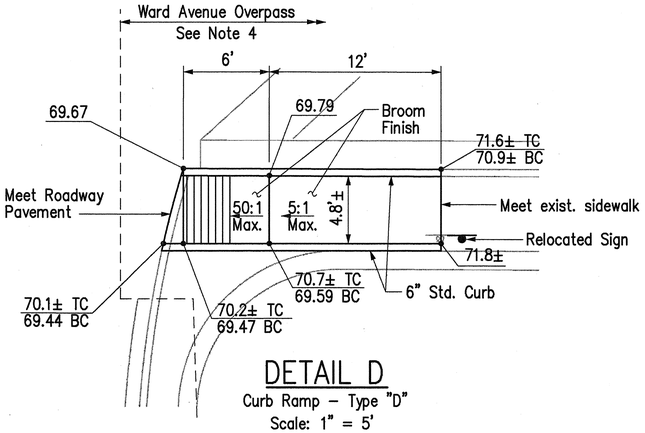

DETAIL D

Curb Ramp – Type "D"
Scale: 1" = 5'

NOTES:

1. Dimensions are measured along curb face.
2. Exist. FA Pullbox to be removed. Fill hole with concrete. Match existing sidewalk.
3. Refer to Sheets CR-1 to CR-4 for Typical Curb Ramp Details.
4. Refer to Sheet DR20 for Curb Ramp and Gutter Reconstruction on Ward Avenue Overpass.

BENJAMIN S. TANAKA
LICENSED PROFESSIONAL ENGINEER
No. 2055-C
HAWAII, U.S.A.

THIS WORK WAS PREPARED BY ME OR UNDER MY SUPERVISION.

STATE OF HAWAII
DEPARTMENT OF TRANSPORTATION
HIGHWAYS DIVISION

DETAILED ROADWAY PLAN
WARD AVENUE

INTERSTATE ROUTE H-1 RESURFACING
Vic. of Punchbowl Off Ramp to Kapiolani IC
F.A.I Project No. IM-H1-1(234)
Scale: 1" = 20' Date: June 1, 1999

SHEET No. DR6 OF 54 SHEETS

J:\hl-surf\ward\altgn\a-w-02.dgn Tue May 25 11:21:27 1999

ORIGINAL PLAN | SURVEY PLOTTED BY | DRAWN BY | TRACED BY | DESIGNED BY | QUANTITIES BY | CHECKED BY | DATE | NOTE BOOK | No.

FED. ROAD DIST. NO.	STATE	FED. AID PROJ. NO.	FISCAL YEAR	SHEET NO.	TOTAL SHEETS
HAWAII	HAW.	IM-H1-1(234)	2000	69	557

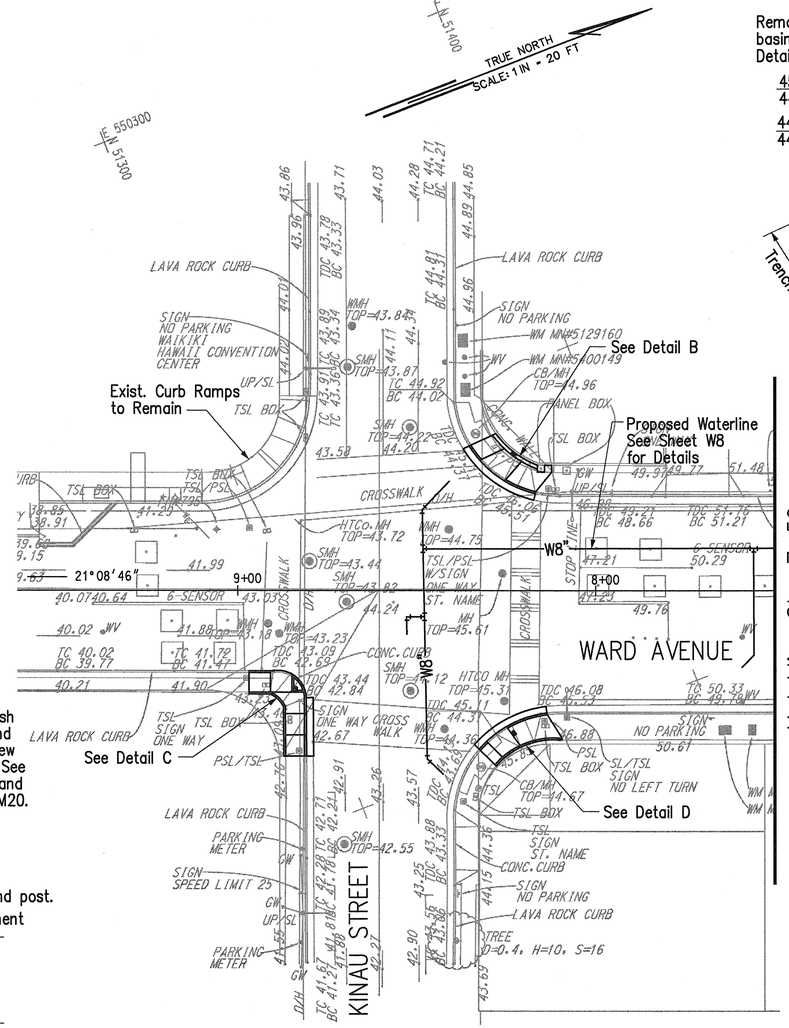

Matchline Sta. 7+50
See Sht. DR6
for continuation

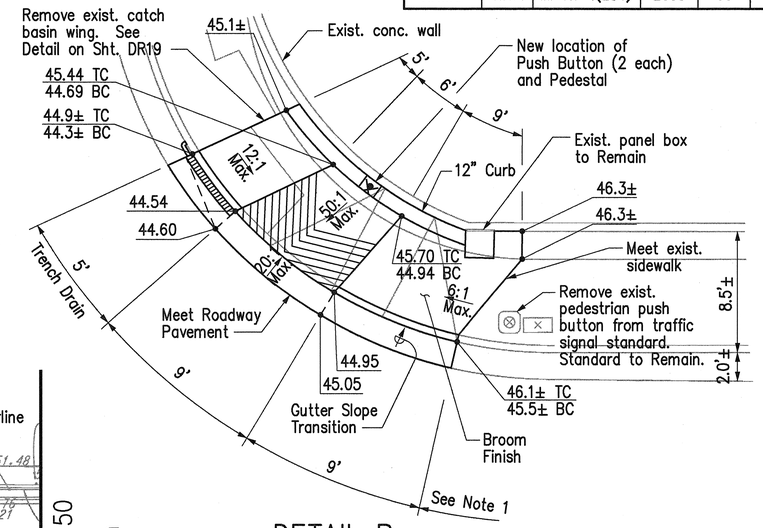

DETAIL B

Curb Ramp – Type "B-1"
Scale: 1" = 5'

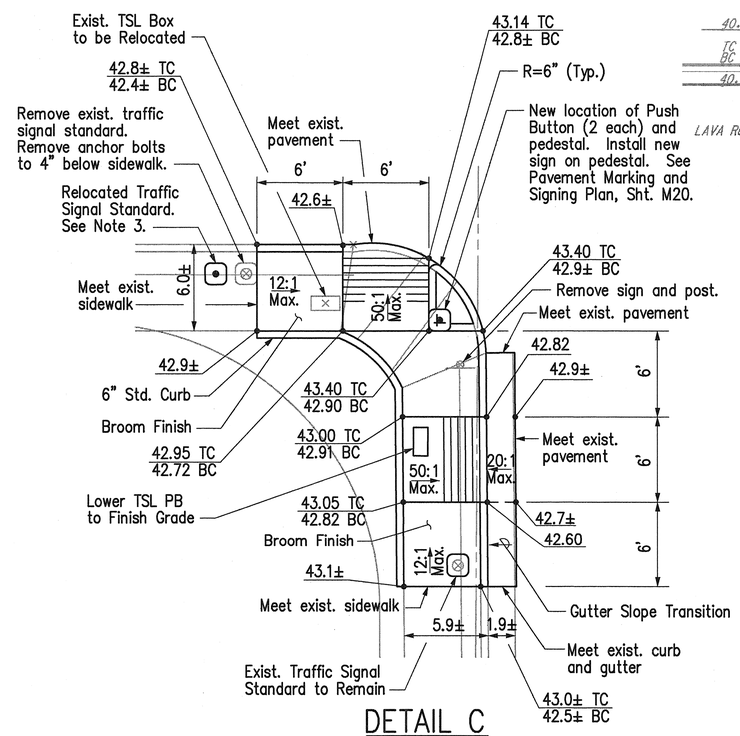

DETAIL C

Curb Ramp – Type "E"
Scale: 1" = 5'

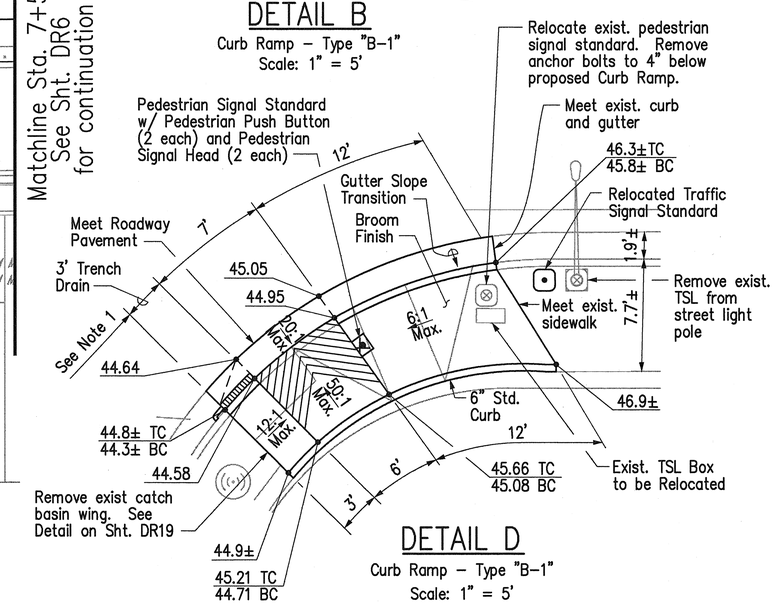

DETAIL D

Curb Ramp – Type "B-1"
Scale: 1" = 5'

NOTES:

1. Dimensions are measured along curb face.
2. Refer to Sheets DR19 and CR-1 to CR-4 for Typical Curb Ramp Details.
3. Maintain 3' min. clr. between base of Relocated Traffic Signal Standard and back of sidewalk.

BENJAMIN S. TANAKA
LICENSED PROFESSIONAL ENGINEER
No. 2055-C
HAWAII, U.S.A.

THIS WORK WAS PREPARED BY ME OR UNDER MY SUPERVISION.

STATE OF HAWAII
DEPARTMENT OF TRANSPORTATION
HIGHWAYS DIVISION

DETAILED ROADWAY PLAN
WARD AVENUE

INTERSTATE ROUTE H-1 RESURFACING
Vic. of Punchbowl Off Ramp to Kapiolani IC
F.A.I Project No. IM-H1-1(234)
Scale: 1" = 20' Date: June 1, 1999

SHEET No. DR7 OF 54 SHEETS

ORIGINAL PLAN | SURVEY PLOTTED BY | DRAWN BY | TRACED BY | DESIGNED BY | QUANTITIES BY | CHECKED BY | NOTE BOOK | No. | DATE

J:\hi-surf\ward\alt\gn\d-w-03.dgn Tue Jul 20 11:37:33 1999

FED. ROAD DIST. NO.	STATE	FED. AID PROJ. NO.	FISCAL YEAR	SHEET NO.	TOTAL SHEETS
HAWAII	HAW.	IM-H1-1(234)	2000	70	557

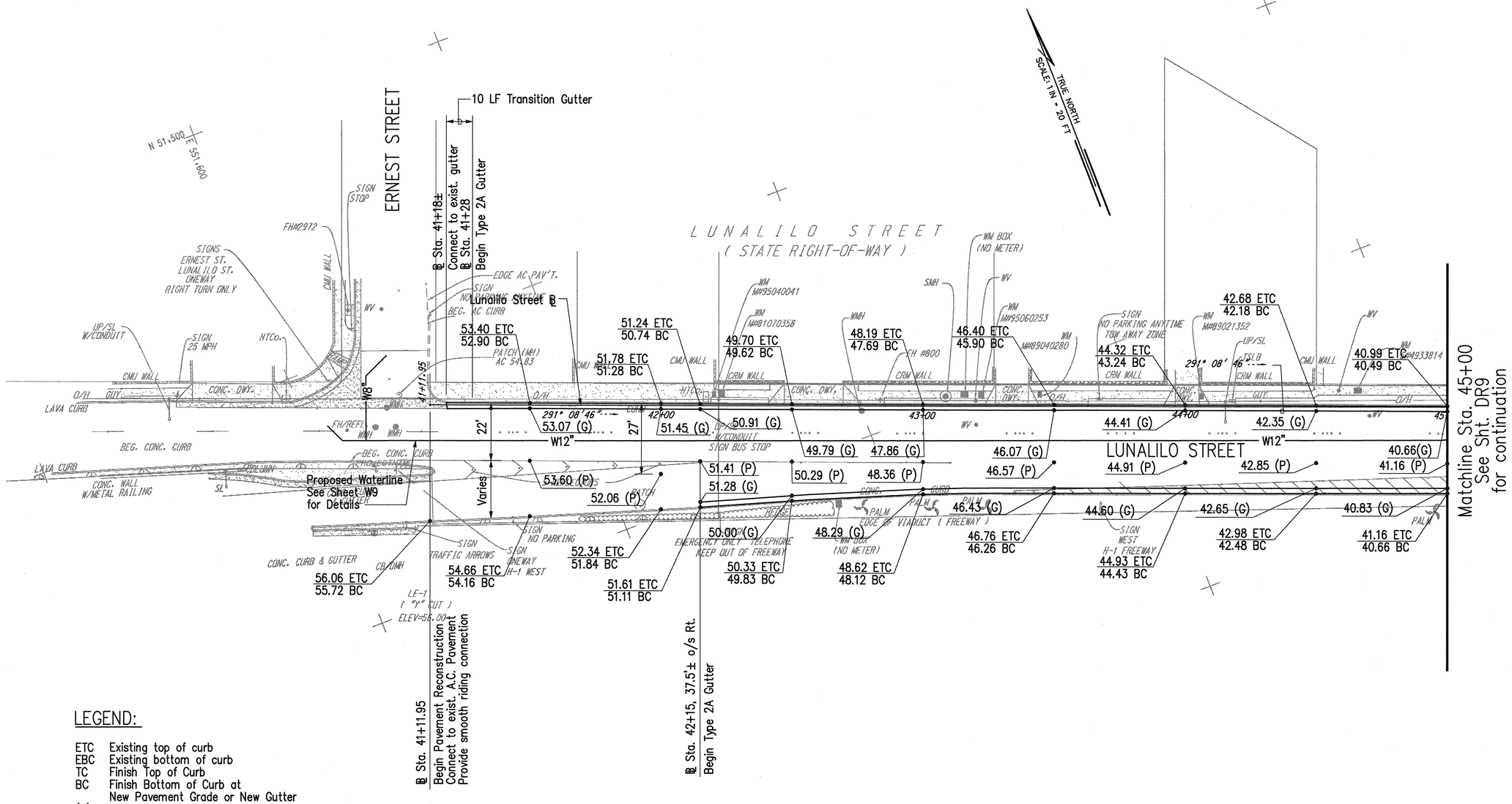

LEGEND:

ETC	Existing top of curb
EBC	Existing bottom of curb
TC	Finish Top of Curb
BC	Finish Bottom of Curb at New Pavement Grade or New Gutter
(G)	Finish Gutter Grade
(P)	Finish Pavement Grade

ORIGINAL PLAN	SURVEY PLOTTED BY	DATE
	DRAWN BY	
	TRACED BY	
NOTE BOOK	DESIGNED BY	
	QUANTITIES BY	
No.	CHECKED BY	

BENJAMIN S. TANAKA LICENSED PROFESSIONAL ENGINEER No. 2055-C HAWAII, U.S.A.

THIS WORK WAS PREPARED BY ME OR UNDER MY SUPERVISION.

STATE OF HAWAII
DEPARTMENT OF TRANSPORTATION
HIGHWAYS DIVISION

DETAILED ROADWAY PLAN
LUNALILO STREET

INTERSTATE ROUTE H-1 RESURFACING
Vic. of Punchbowl Off Ramp to Kapiolani IC
F.A.I Project No. IM-H1-1(234)
Scale: 1" = 20' Date: June 1, 1999

SHEET No. DR8 OF 54 SHEETS

J:\hi-surf\lunalilo\align\a-1-01.dgn Tue May 25 09:59:21 1999

FED. ROAD DIST. NO.	STATE	FED. AID PROJ. NO.	FISCAL YEAR	SHEET NO.	TOTAL SHEETS
HAWAII	HAW.	IM-H1-1(234)	2000	71	557

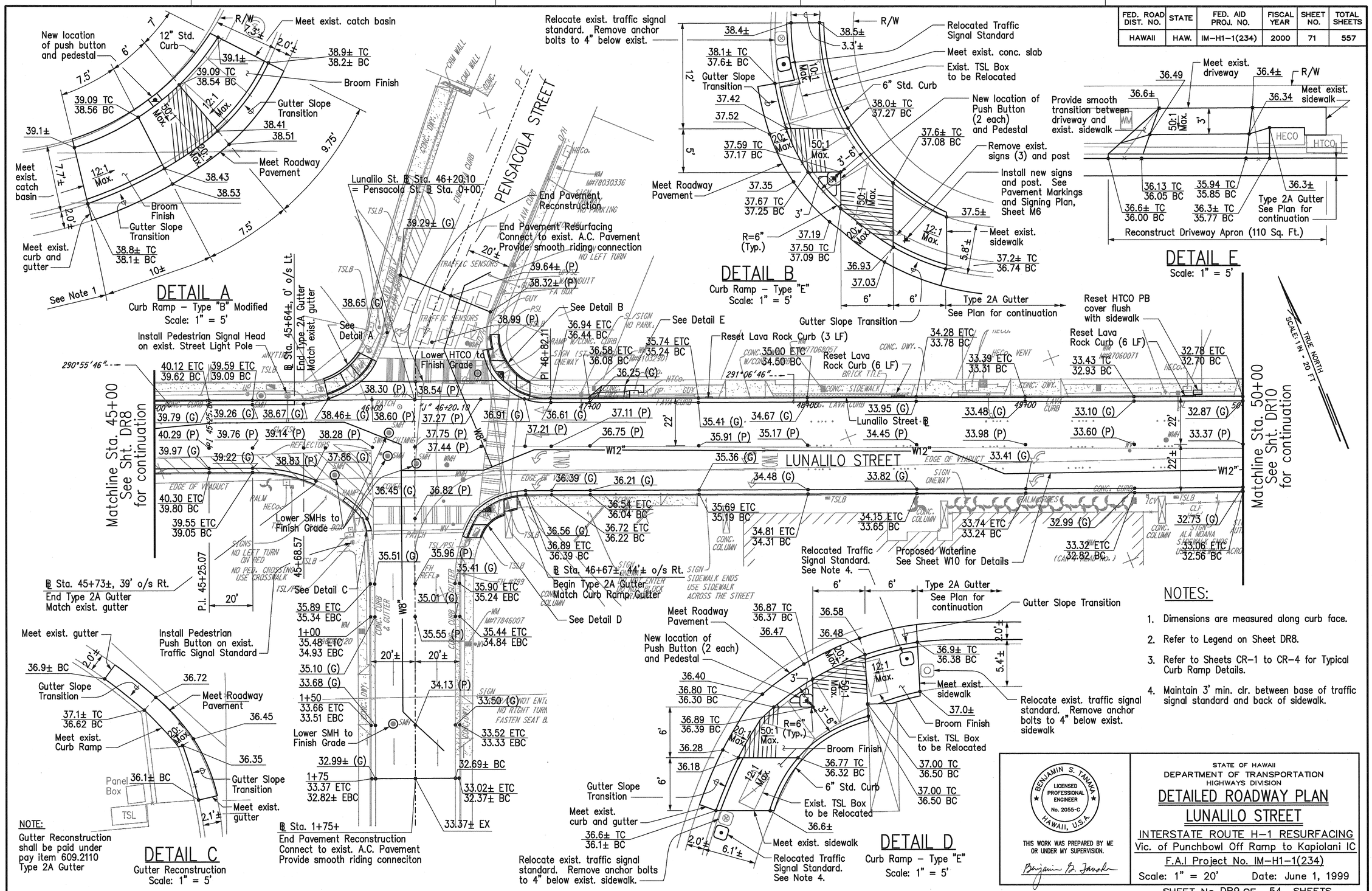

NOTES:

1. Dimensions are measured along curb face.
2. Refer to Legend on Sheet DR8.
3. Refer to Sheets CR-1 to CR-4 for Typical Curb Ramp Details.
4. Maintain 3' min. clr. between base of traffic signal standard and back of sidewalk.

NOTE:
Gutter Reconstruction shall be paid under pay item 609.2110 Type 2A Gutter

BENJAMIN S. TANAKA LICENSED PROFESSIONAL ENGINEER No. 2055-C HAWAII, U.S.A.

THIS WORK WAS PREPARED BY ME OR UNDER MY SUPERVISION.

STATE OF HAWAII
DEPARTMENT OF TRANSPORTATION
HIGHWAYS DIVISION

DETAILED ROADWAY PLAN
LUNALILO STREET

INTERSTATE ROUTE H-1 RESURFACING
Vic. of Punchbowl Off Ramp to Kapiolani IC
F.A.I Project No. IM-H1-1(234)
Scale: 1" = 20' Date: June 1, 999

SHEET No. DR9 OF 54 SHEETS

ORIGINAL PLAN | SURVEY PLOTTED BY | DRAWN BY | TRACED BY | DESIGNED BY | QUANTITIES BY | CHECKED BY | NOTE BOOK | No. | DATE

J:\hl-surf\lunalilo\altgn\a-1-02.dgn Tue Jul 20 11:32:01 1999

FED. ROAD DIST. NO.	STATE	FED. AID PROJ. NO.	FISCAL YEAR	SHEET NO.	TOTAL SHEETS
HAWAII	HAW.	IM-H1-1(234)	2000	72	557

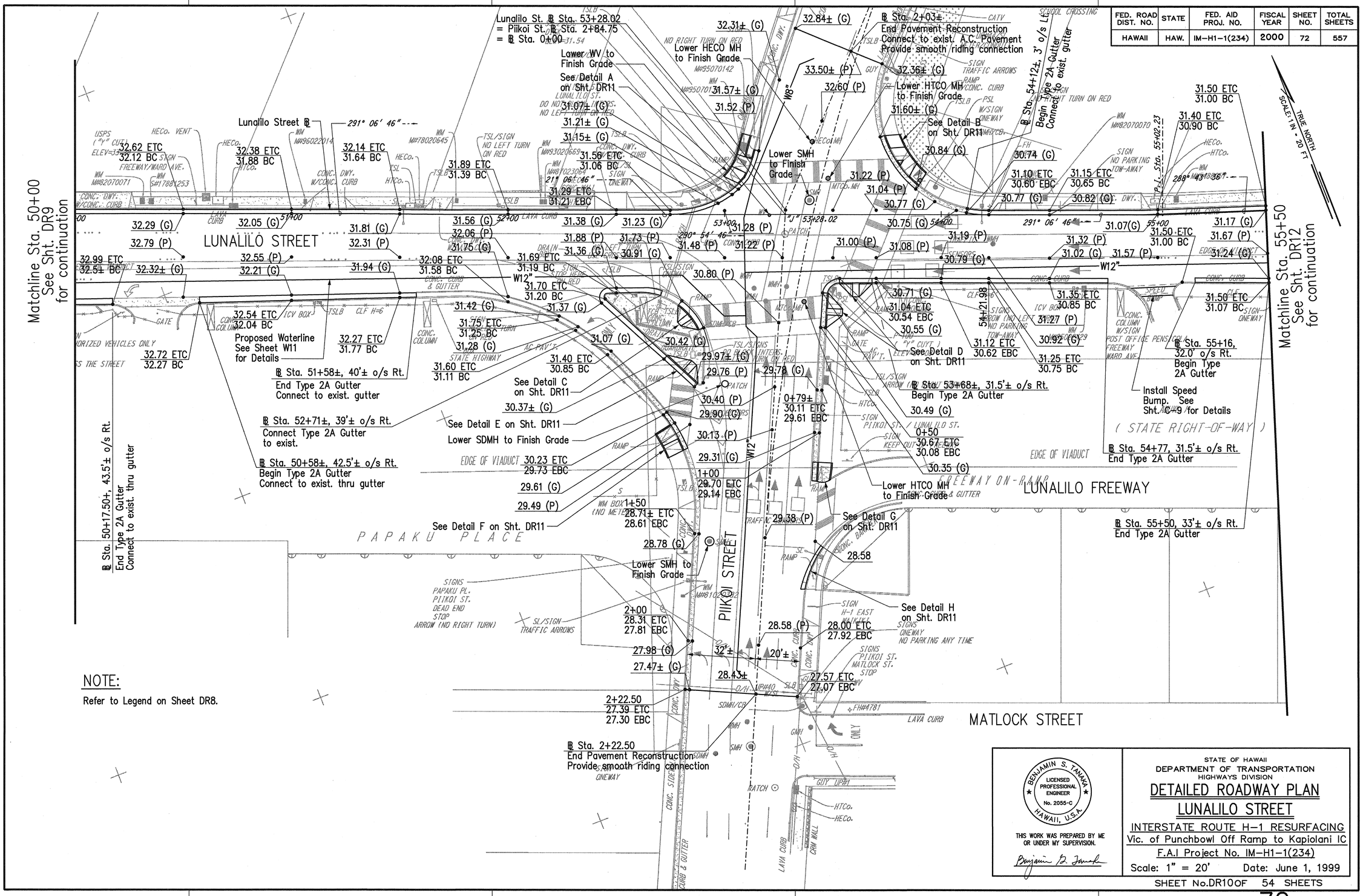

NOTE:

Refer to Legend on Sheet DR8.

ORIGINAL PLAN	SURVEY PLOTTED BY	DATE
	TRACED BY	
	DESIGNED BY	
NOTE BOOK	QUANTITIES BY	
No.	CHECKED BY	

BENJAMIN S. TANAKA LICENSED PROFESSIONAL ENGINEER No. 2055-C HAWAII, U.S.A.

THIS WORK WAS PREPARED BY ME OR UNDER MY SUPERVISION.

STATE OF HAWAII
DEPARTMENT OF TRANSPORTATION
HIGHWAYS DIVISION

DETAILED ROADWAY PLAN
LUNALILO STREET

INTERSTATE ROUTE H-1 RESURFACING
Vic. of Punchbowl Off Ramp to Kapiolani IC
F.A.I Project No. IM-H1-1(234)
Scale: 1" = 20' Date: June 1, 1999

SHEET No.DR10 OF 54 SHEETS

J:\hl-surf\lunalilo\align\a-l-03.dgn Tue May 25 10:02:43 1999

FED. ROAD DIST. NO.	STATE	FED. AID PROJ. NO.	FISCAL YEAR	SHEET NO.	TOTAL SHEETS
HAWAII	HAW.	IM-H1-1(234)	2000	73	557

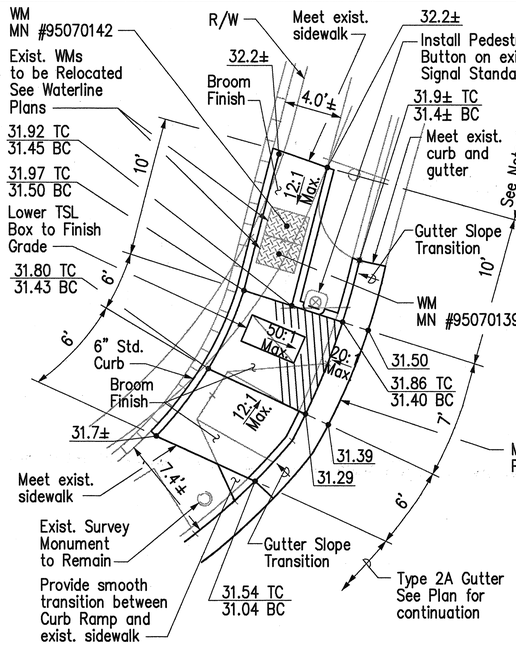

DETAIL A

Curb Ramp – Type "B" Modified

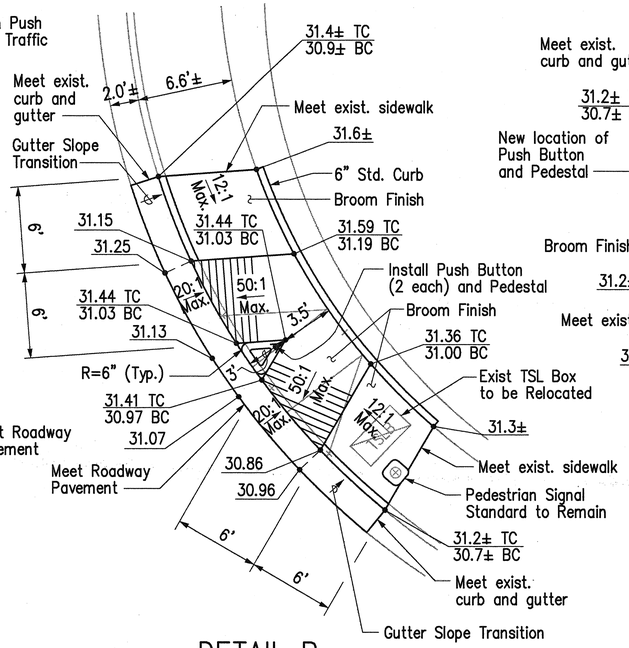

DETAIL B

Curb Ramp – Type "E"

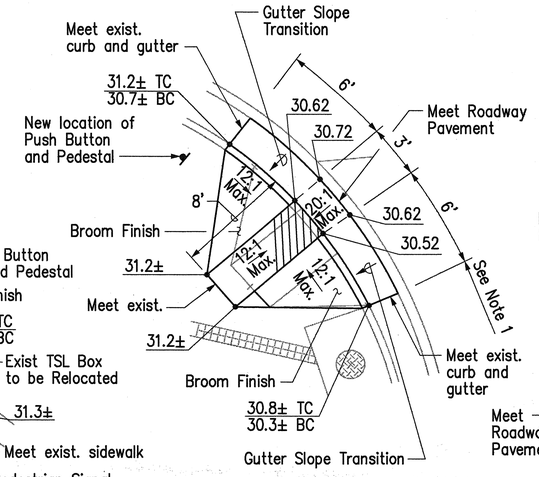

DETAIL C

Curb Ramp – Type "A"

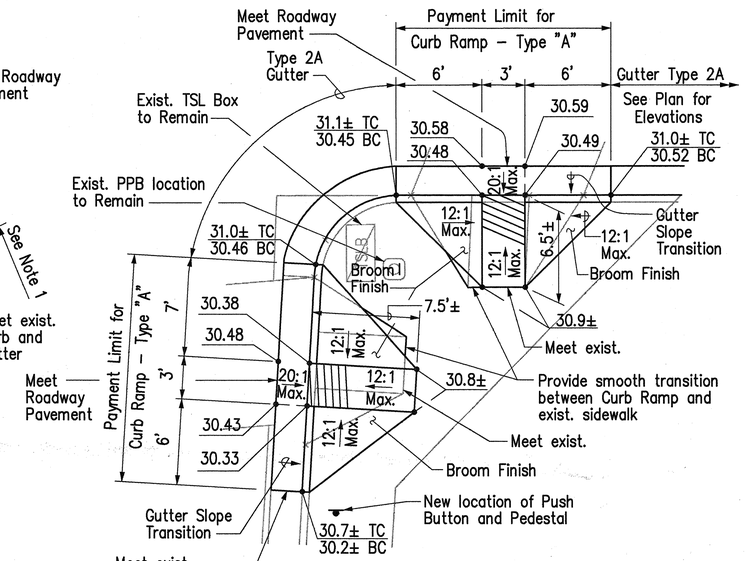

DETAIL D

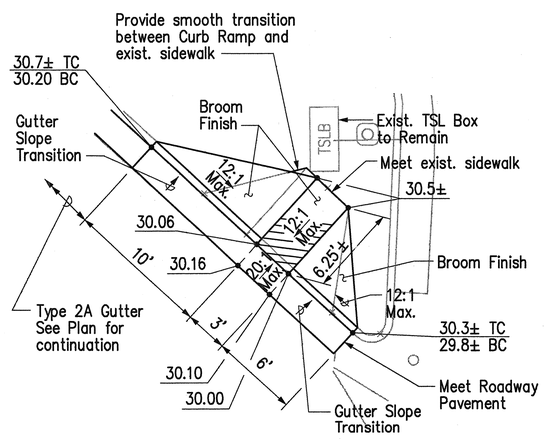

DETAIL E

Curb Ramp – Type "A"

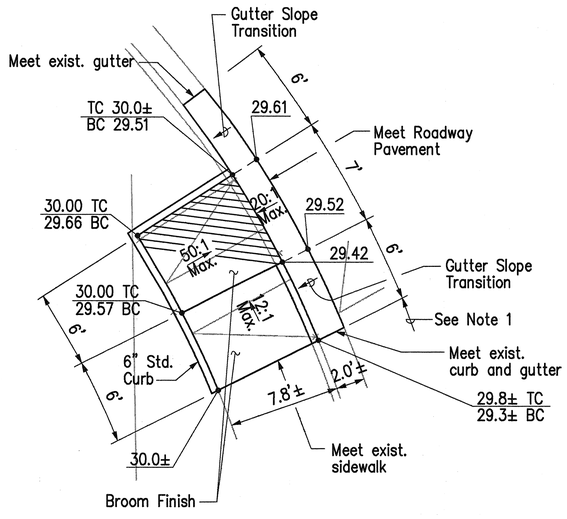

DETAIL F

Curb Ramp – Type "B" Modified

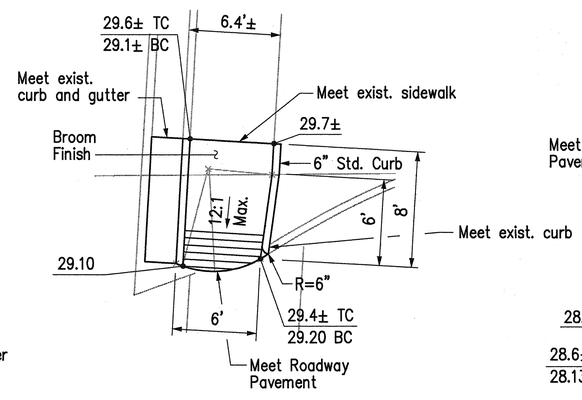

DETAIL G

Curb Ramp – Type "D"

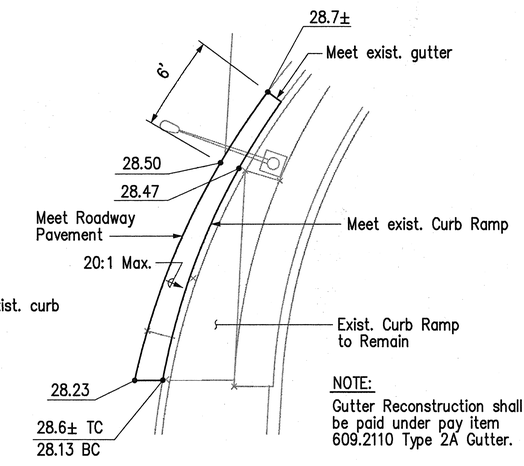

NOTE:
Gutter Reconstruction shall be paid under pay item 609.2110 Type 2A Gutter.

DETAIL H

Gutter Reconstruction

NOTE:

1. Dimensions are measured along curb face.
2. Refer to Sheets CR-1 to CR-4 for Typical Curb Ramp Details.

APPROVED:

CHIEF, PLANNING & ENGINEERING DIVISION, BWS DATE

BENJAMIN S. TANAKA
LICENSED PROFESSIONAL ENGINEER
No. 2055-C
HAWAII, U.S.A.

THIS WORK WAS PREPARED BY ME OR UNDER MY SUPERVISION.

STATE OF HAWAII
DEPARTMENT OF TRANSPORTATION
HIGHWAYS DIVISION

DETAILED ROADWAY PLAN
LUNALILO STREET

INTERSTATE ROUTE H-1 RESURFACING
Vic. of Punchbowl Off Ramp to Kapiolani IC
F.A.I Project No. IM-H1-1(234)
Scale: 1" = 5' Date: June 1, 1999

SHEET No.DR11 OF 54 SHEETS

ORIGINAL PLAN | SURVEY PLOTTED BY | DRAWN BY | TRACED BY | DESIGNED BY | QUANTITIES BY | CHECKED BY | DATE | NOTE BOOK | No.

J:\hl-surf\lunalilo\align\a-l-03d.dgn Tue May 25 11:25:44 1999

FED. ROAD DIST. NO.	STATE	FED. AID PROJ. NO.	FISCAL YEAR	SHEET NO.	TOTAL SHEETS
HAWAII	HAW.	IM-H1-1(234)	2000	74	557

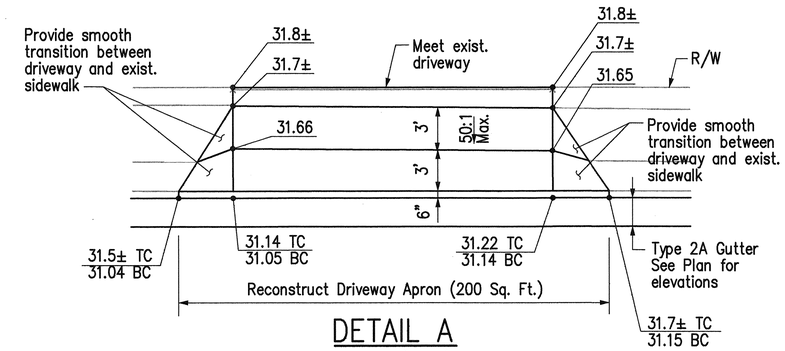

DETAIL A

Scale: 1" = 5'

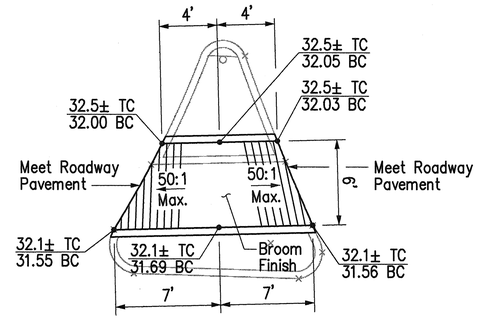

DETAIL C

Curb Ramp – Type "C"
Scale: 1" = 5'

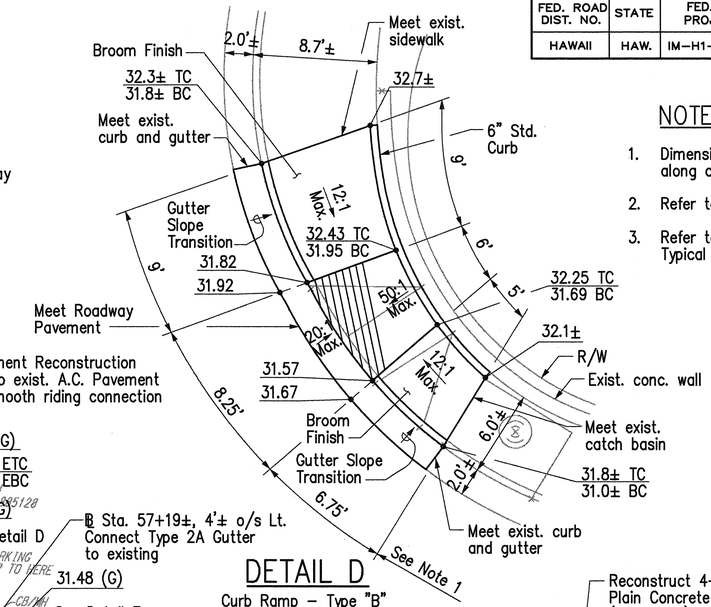

DETAIL D

Curb Ramp – Type "B"
Scale: 1" = 5'

NOTES:

1. Dimensions are measured along curb face.
2. Refer to Legend on Sheet DR8.
3. Refer to Sheets CR-1 to CR-4 for Typical Curb Ramp Details.

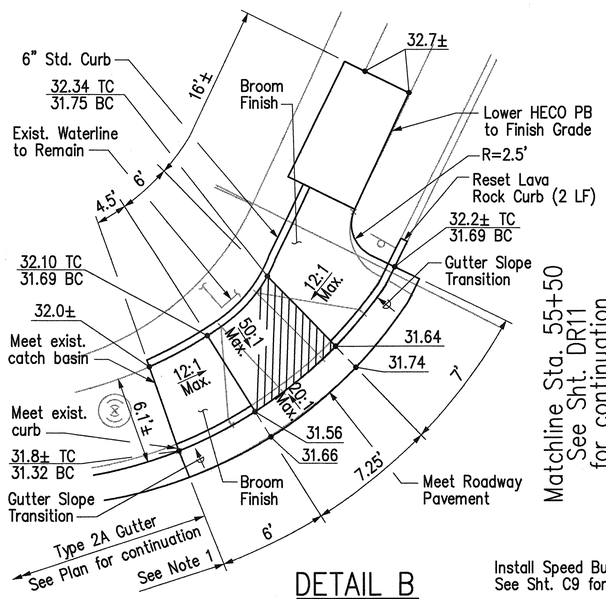

DETAIL B

Curb Ramp – Type "B"
Scale: 1" = 5'

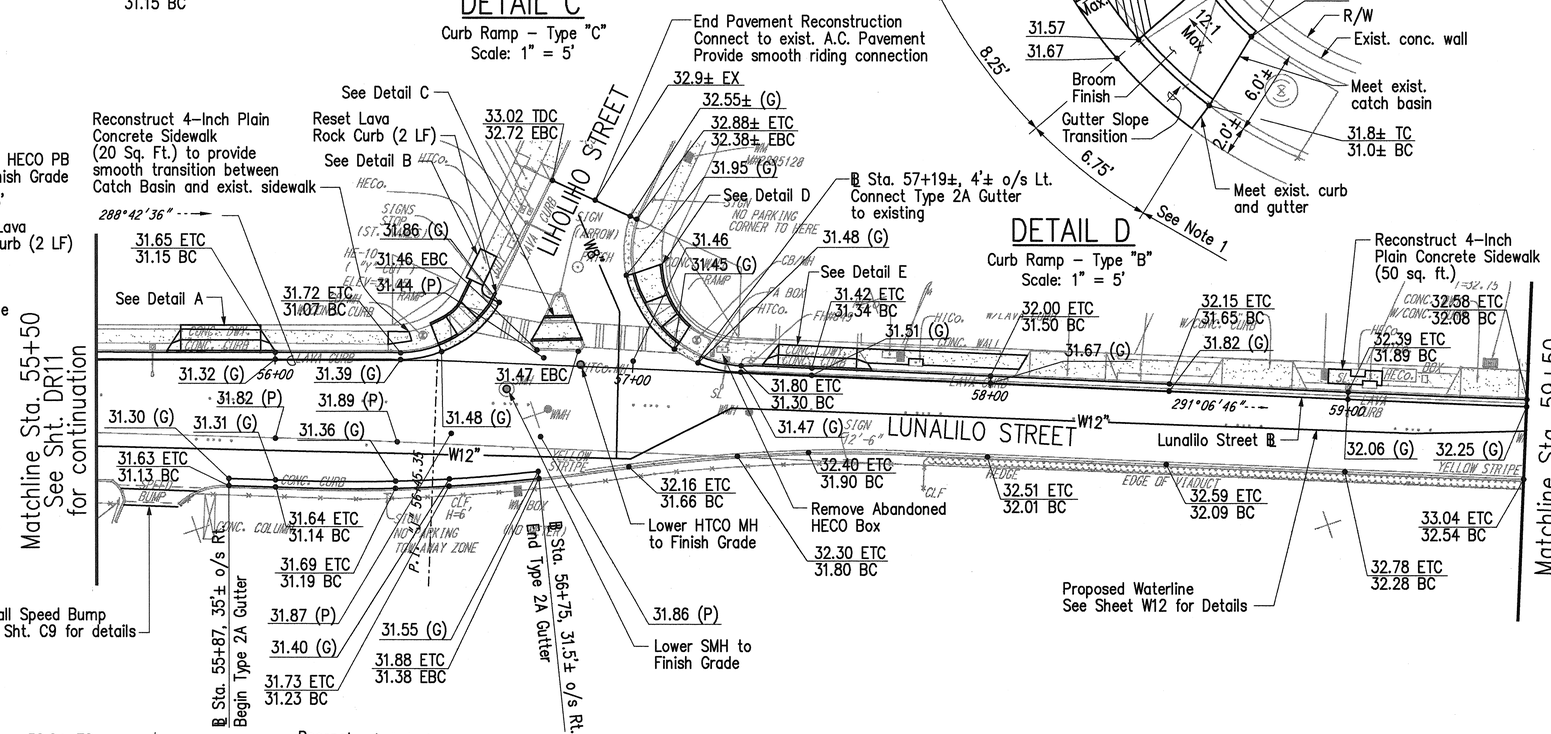

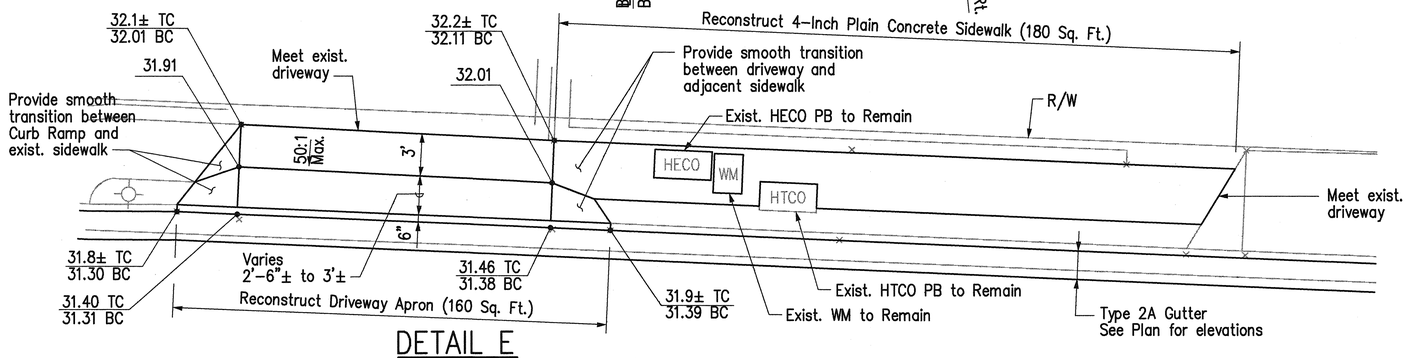

DETAIL E

Scale: 1" = 5'

ORIGINAL PLAN	SURVEY PLOTTED BY	DATE
	DRAFT BY	
	TRACED BY	
NOTE BOOK	DESIGNED BY	
	QUANTITIES BY	
No.	CHECKED BY	

BENJAMIN S. TANAKA
LICENSED PROFESSIONAL ENGINEER
No. 2055-C
HAWAII, U.S.A.

THIS WORK WAS PREPARED BY ME OR UNDER MY SUPERVISION.

STATE OF HAWAII
DEPARTMENT OF TRANSPORTATION
HIGHWAYS DIVISION

DETAILED ROADWAY PLAN
LUNALILO STREET

INTERSTATE ROUTE H-1 RESURFACING
Vic. of Punchbowl Off Ramp to Kapiolani IC
F.A.I Project No. IM-H1-1(234)
Scale: 1" = 20' Date: June 1, 1999

SHEET No.DR12OF 54 SHEETS

j:\hl-surf\lunalilo\align\a-l-04.dgn Tue May 25 10:12:13 1999

FED. ROAD DIST. NO.	STATE	FED. AID PROJ. NO.	FISCAL YEAR	SHEET NO.	TOTAL SHEETS
HAWAII	HAW.	IM-H1-1(234)	2000	75	557

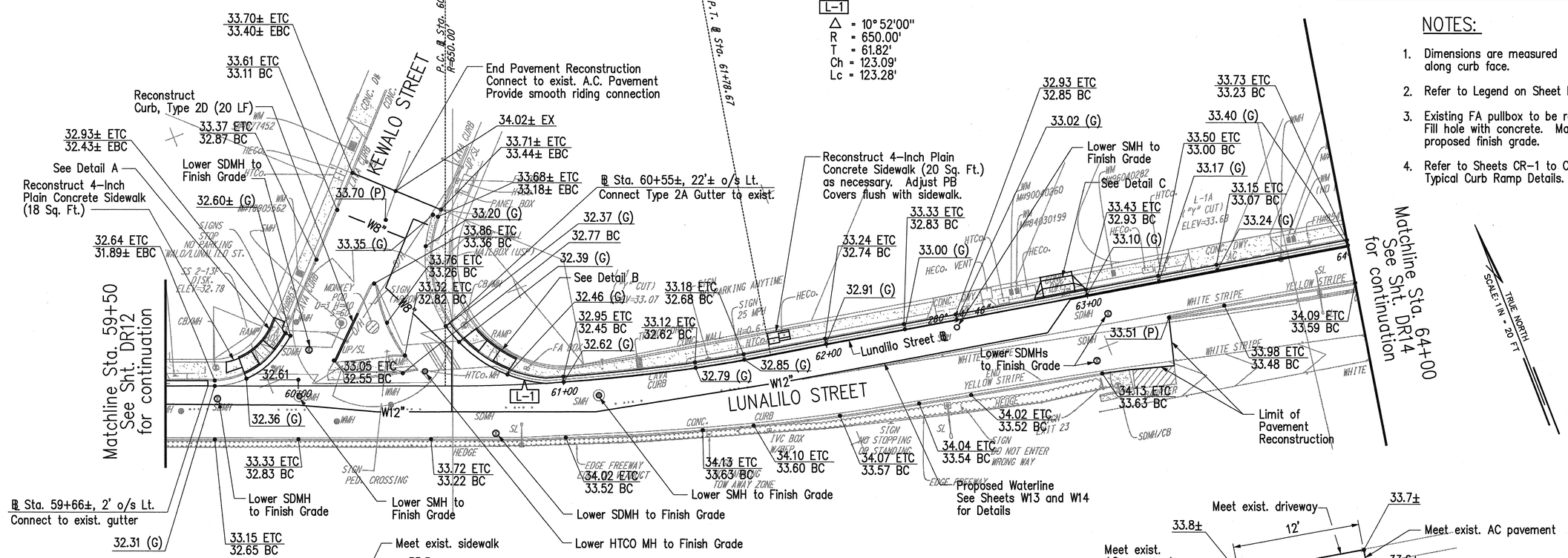

CURVE DATA

L-1

Δ = 10° 52'00"
R = 650.00'
T = 61.82'
Ch = 123.09'
Lc = 123.28'

NOTES:

1. Dimensions are measured along curb face.
2. Refer to Legend on Sheet DR8.
3. Existing FA pullbox to be removed. Fill hole with concrete. Match proposed finish grade.
4. Refer to Sheets CR-1 to CR-4 for Typical Curb Ramp Details.

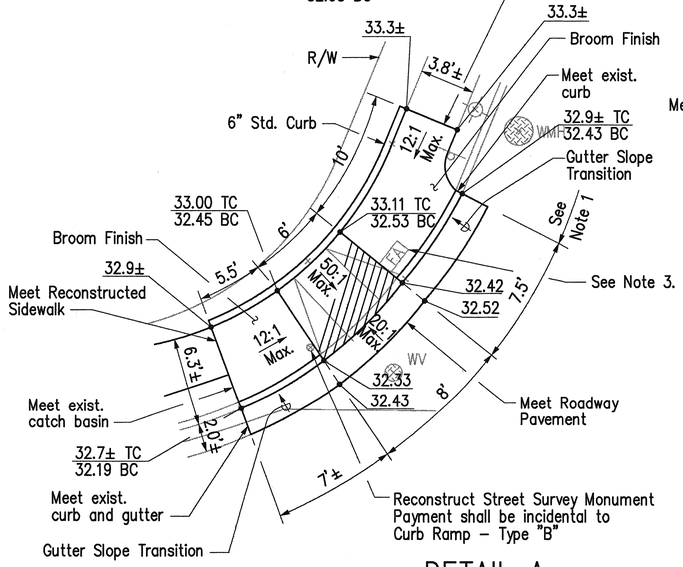

DETAIL A

Curb Ramp - Type "B"
Scale: 1" = 5'

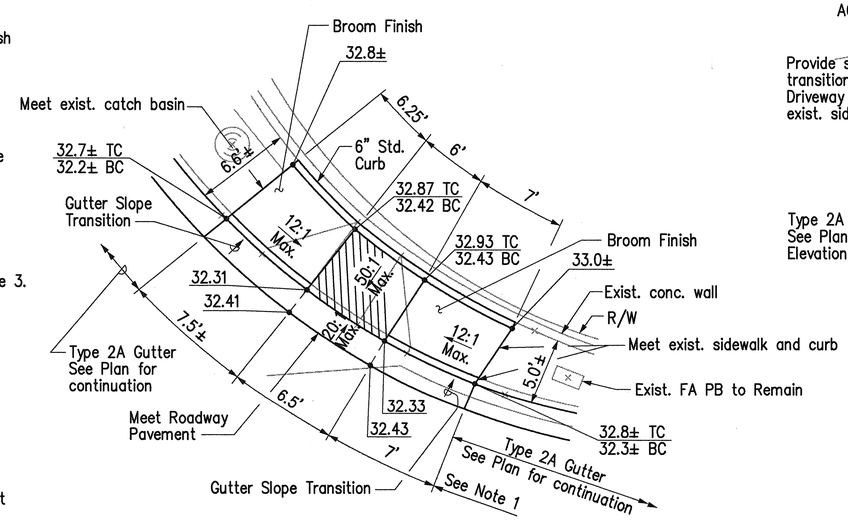

DETAIL B

Curb Ramp - Type "B"
Scale: 1" = 5'

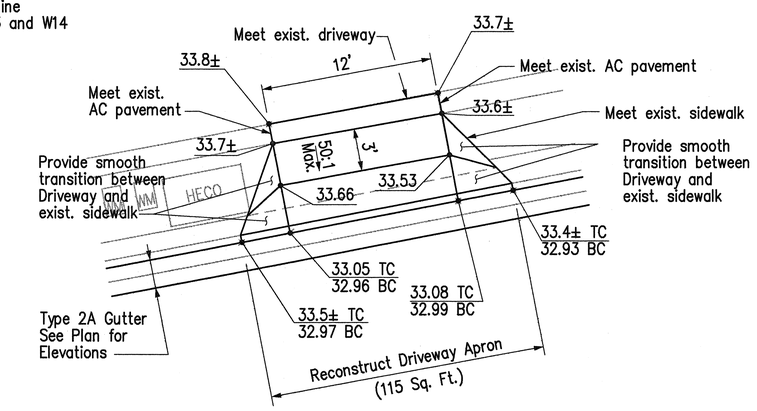

DETAIL C

Scale: 1" = 5'

BENJAMIN S. TANAKA LICENSED PROFESSIONAL ENGINEER No. 2055-C HAWAII, U.S.A.

THIS WORK WAS PREPARED BY ME OR UNDER MY SUPERVISION.

STATE OF HAWAII
DEPARTMENT OF TRANSPORTATION
HIGHWAYS DIVISION

DETAILED ROADWAY PLAN
LUNALILO STREET

INTERSTATE ROUTE H-1 RESURFACING
Vic. of Punchbowl Off Ramp to Kapiolani IC
F.A.I Project No. IM-H1-1(234)

Scale: 1" = 20' Date: June 1, 999

SHEET No.DR13 OF 54 SHEETS

ORIGINAL PLAN | SURVEY PLOTTED BY | TRACED BY | DESIGNED BY | NOTE BOOK | QUANTITIES BY | CHECKED BY | DATE | No.

J:\hl-surf\lunalilo\align\a-l-05.dgn Tue May 25 10:24:16 1999

FED. ROAD DIST. NO.	STATE	FED. AID PROJ. NO.	FISCAL YEAR	SHEET NO.	TOTAL SHEETS
HAWAII	HAW.	IM-H1-1(234)	2000	76	557

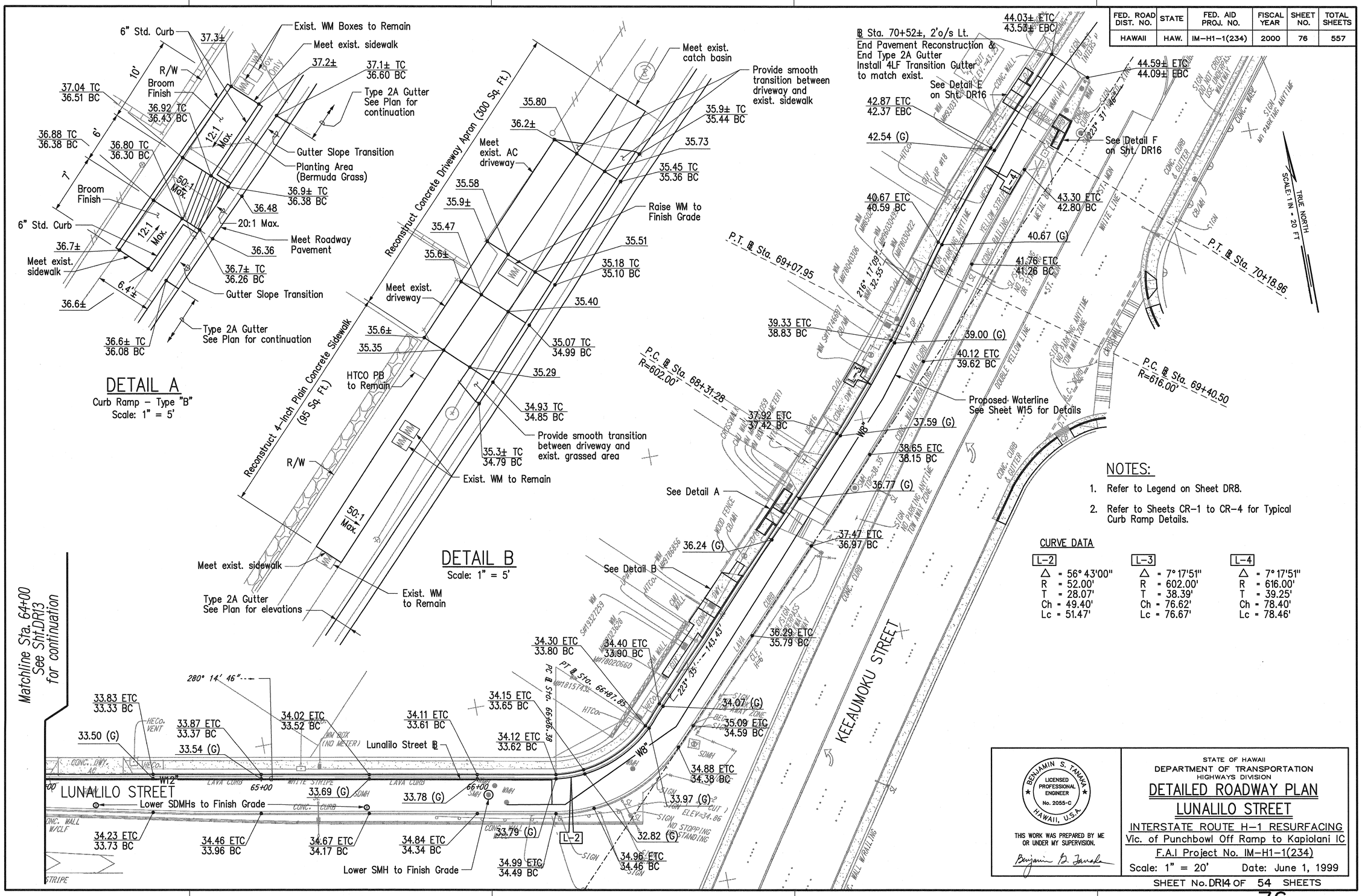

NOTES:

1. Refer to Legend on Sheet DR8.
2. Refer to Sheets CR-1 to CR-4 for Typical Curb Ramp Details.

CURVE DATA

L-2	L-3	L-4
Δ = 56° 43'00"	Δ = 7° 17'51"	Δ = 7° 17'51"
R = 52.00'	R = 602.00'	R = 616.00'
T = 28.07'	T = 38.39'	T = 39.25'
Ch = 49.40'	Ch = 76.62'	Ch = 78.40'
Lc = 51.47'	Lc = 76.67'	Lc = 78.46'

BENJAMIN S. TANAKA
LICENSED PROFESSIONAL ENGINEER
No. 2055-C
HAWAII, U.S.A.

THIS WORK WAS PREPARED BY ME OR UNDER MY SUPERVISION.

Benjamin S. Tanaka

STATE OF HAWAII
DEPARTMENT OF TRANSPORTATION
HIGHWAYS DIVISION

DETAILED ROADWAY PLAN
LUNALILO STREET

INTERSTATE ROUTE H-1 RESURFACING
Vic. of Punchbowl Off Ramp to Kapiolani IC
F.A.I Project No. IM-H1-1(234)
Scale: 1" = 20' Date: June 1, 1999

SHEET No. DR14 OF 54 SHEETS

76

ORIGINAL PLAN	SURVEY PLOTTED BY	DATE
	PLANS BY	
	PLANS CHK BY	
NOTE BOOK	DESIGNED BY	
	QUANTITIES BY	
No.	CHECKED BY	

J:\hi-surf\lunalilo\align\a-1-06.dgn Tue Jul 20 11:30:08 1999

FED. ROAD DIST. NO.	STATE	FED. AID PROJ. NO.	FISCAL YEAR	SHEET NO.	TOTAL SHEETS
HAWAII	HAW.	IM-H1-1(234)	2000	77	557

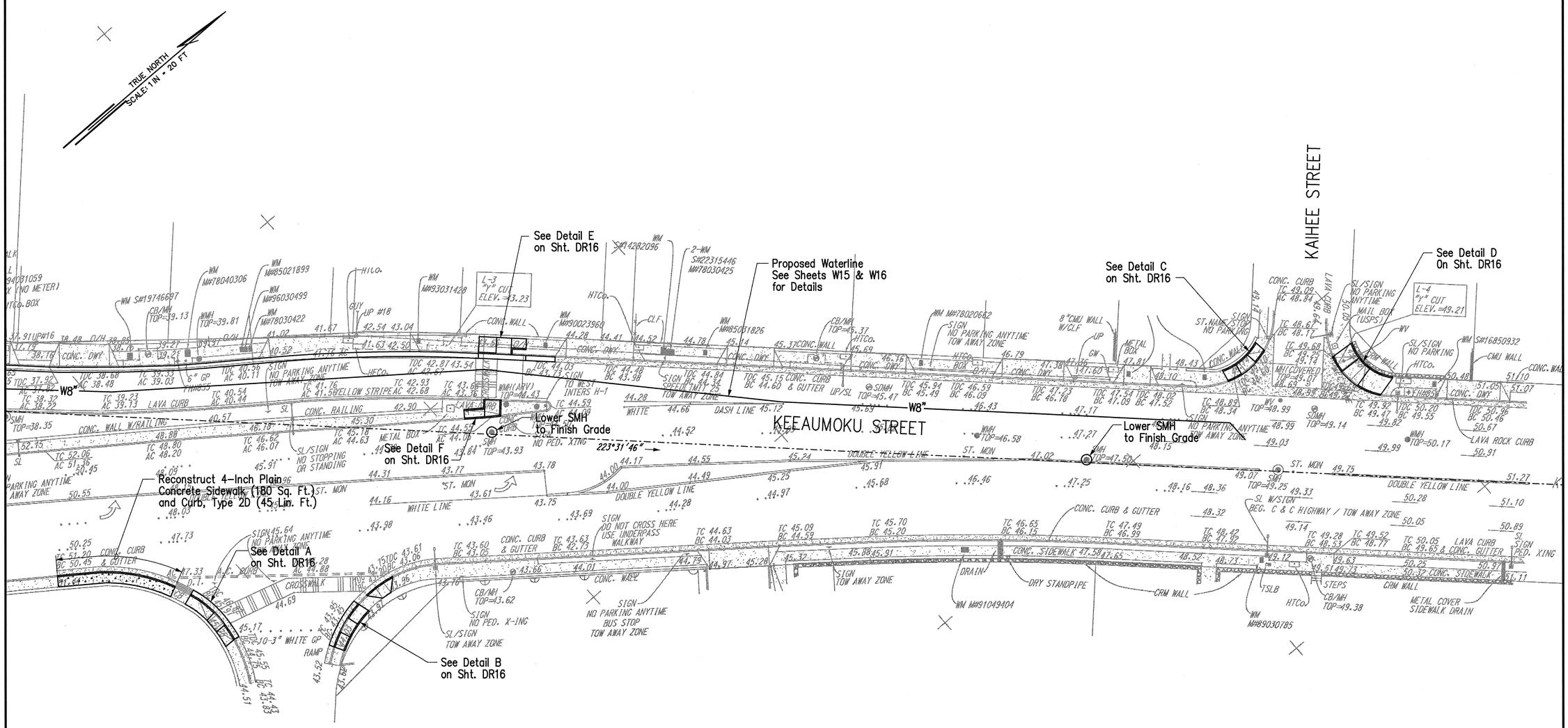

ORIGINAL PLAN	SURVEY PLOTTED BY	DATE
	DRAFT BY	
	TRACED BY	
NOTE BOOK	DESIGNED BY	
	QUANTITIES BY	
No.	CHECKED BY	

j:\hi-surf\kunalilo\align\a-k-02.dgn Tue May 25 10:28:36 1999

BENJAMIN S. TANAKA
LICENSED PROFESSIONAL ENGINEER
No. 2055-C
HAWAII, U.S.A.

THIS WORK WAS PREPARED BY ME OR UNDER MY SUPERVISION.

STATE OF HAWAII
DEPARTMENT OF TRANSPORTATION
HIGHWAYS DIVISION

DETAILED ROADWAY PLAN

KEEAUMOKU STREET

INTERSTATE ROUTE H-1 RESURFACING
Vic. of Punchbowl Off Ramp to Kapiolani IC
F.A.I Project No. IM-H1-1(234)
Scale: 1" = 20' Date: June 1, 1999

SHEET No.DR15 OF 54 SHEETS

FED. ROAD DIST. NO.	STATE	FED. AID PROJ. NO.	FISCAL YEAR	SHEET NO.	TOTAL SHEETS
HAWAII	HAW.	IM-H1-1(234)	2000	78	557

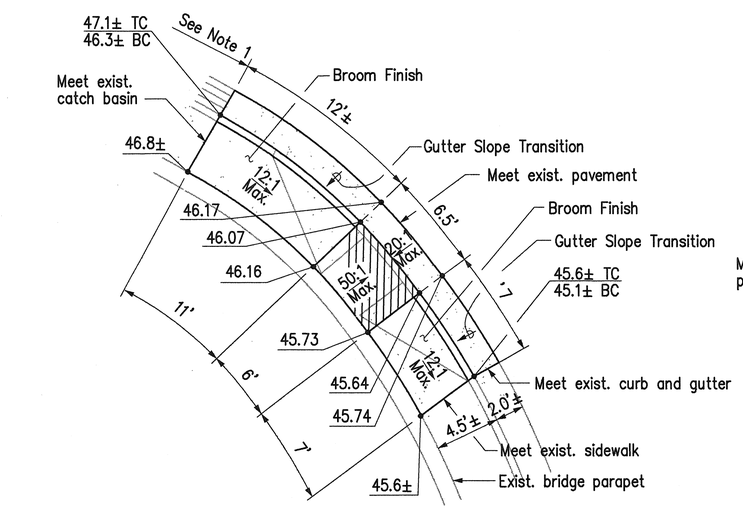

DETAIL A
Curb Ramp – Type "B"

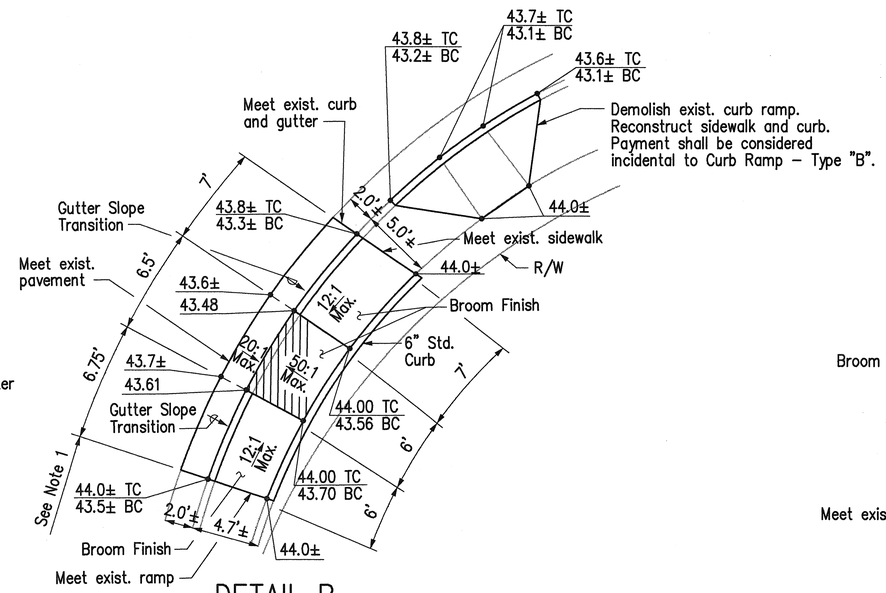

DETAIL B
Curb Ramp – Type "B"

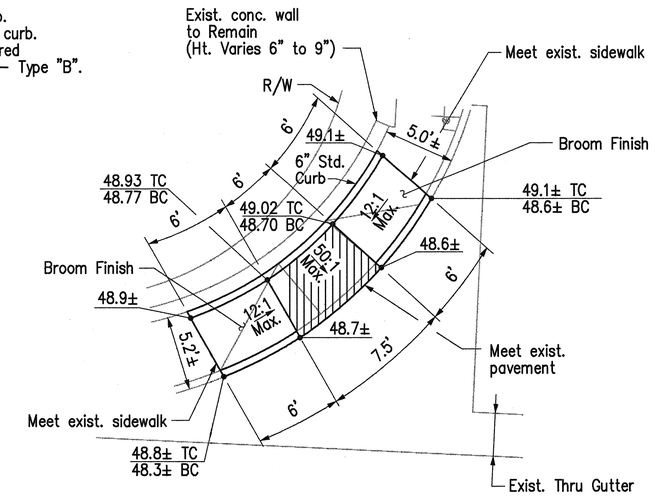

DETAIL C
Curb Ramp – Type "B"

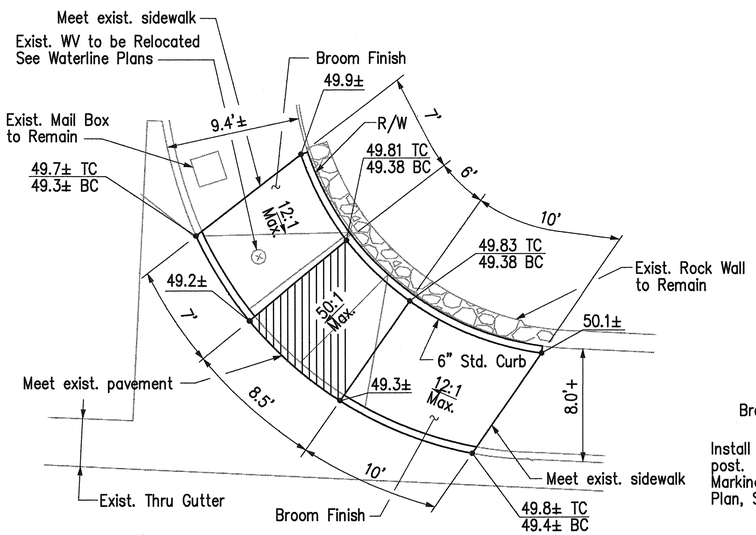

DETAIL D
Curb Ramp – Type "B" Modified

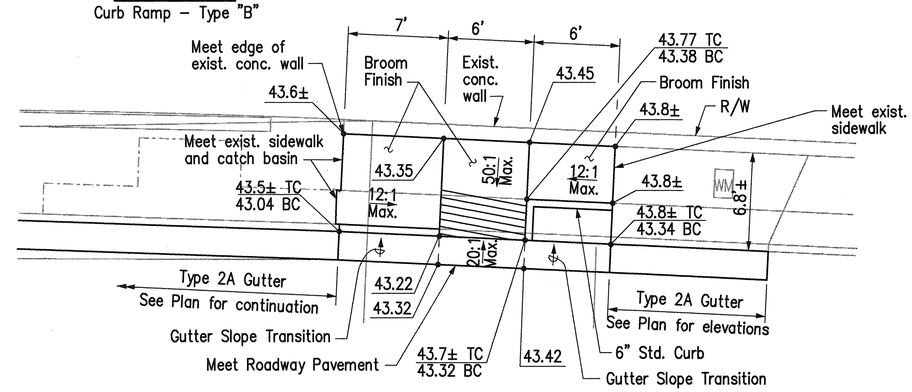

DETAIL E
Curb Ramp – Type "B"

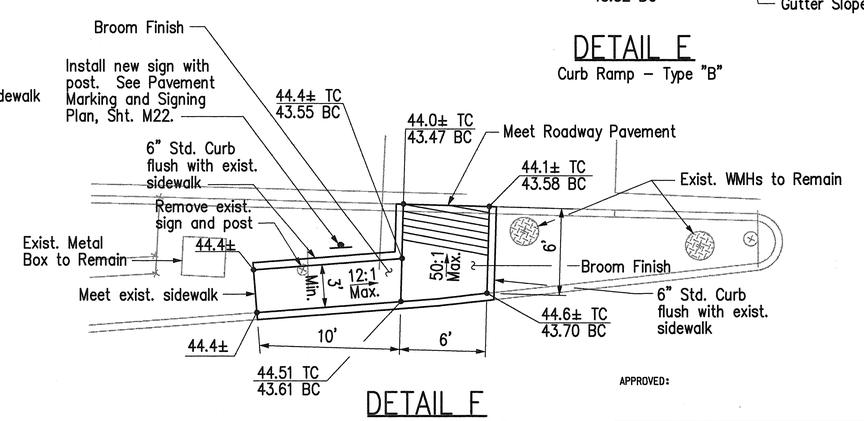

DETAIL F
Curb Ramp – Type "C"

NOTES:

1. Dimensions are measured along curb face.
2. Refer to Sheets CR-1 to CR-4 for Typical Curb Ramp Details.

APPROVED:

CHIEF, PLANNING & ENGINEERING DIVISION, BWS DATE

BENJAMIN S. TANAKA LICENSED PROFESSIONAL ENGINEER No. 2055-C HAWAII, U.S.A.

THIS WORK WAS PREPARED BY ME OR UNDER MY SUPERVISION.

STATE OF HAWAII
DEPARTMENT OF TRANSPORTATION
HIGHWAYS DIVISION

DETAILED ROADWAY PLAN
KEEAUMOKU STREET

INTERSTATE ROUTE H-1 RESURFACING
Vic. of Punchbowl Off Ramp to Kapiolani IC
F.A.I Project No. IM-H1-1(234)

Scale: 1" = 5' Date: June 1, 1999

SHEET No.DR16 OF 54 SHEETS

78

ORIGINAL PLAN | SURVEY PLOTTED BY | TRACED BY | DESIGNED BY | NOTE BOOK | QUANTITIES BY | CHECKED BY | DATE | No.

j:\hi-surf\lunalilo\altgn\a-k-03.dgn Tue May 25 10:29:15 1999

FED. ROAD DIST. NO.	STATE	FED. AID PROJ. NO.	FISCAL YEAR	SHEET NO.	TOTAL SHEETS
HAWAII	HAW.	IM-H1-1(234)	2000	79	557

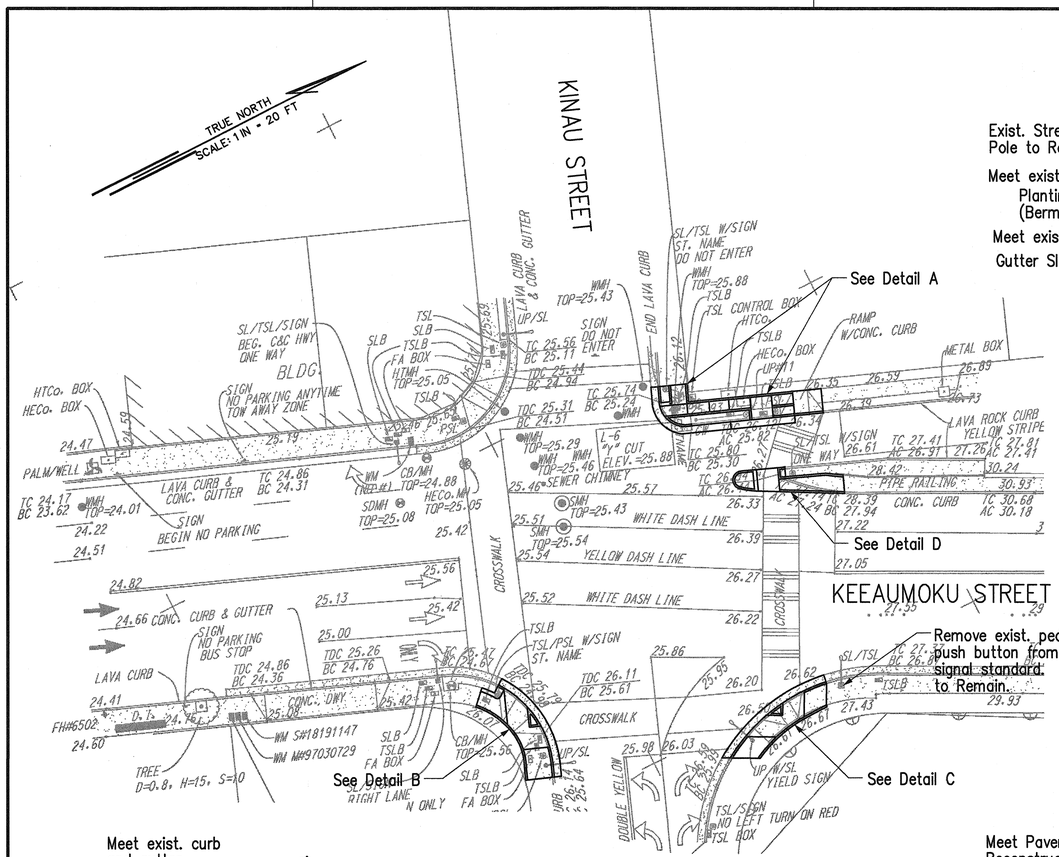

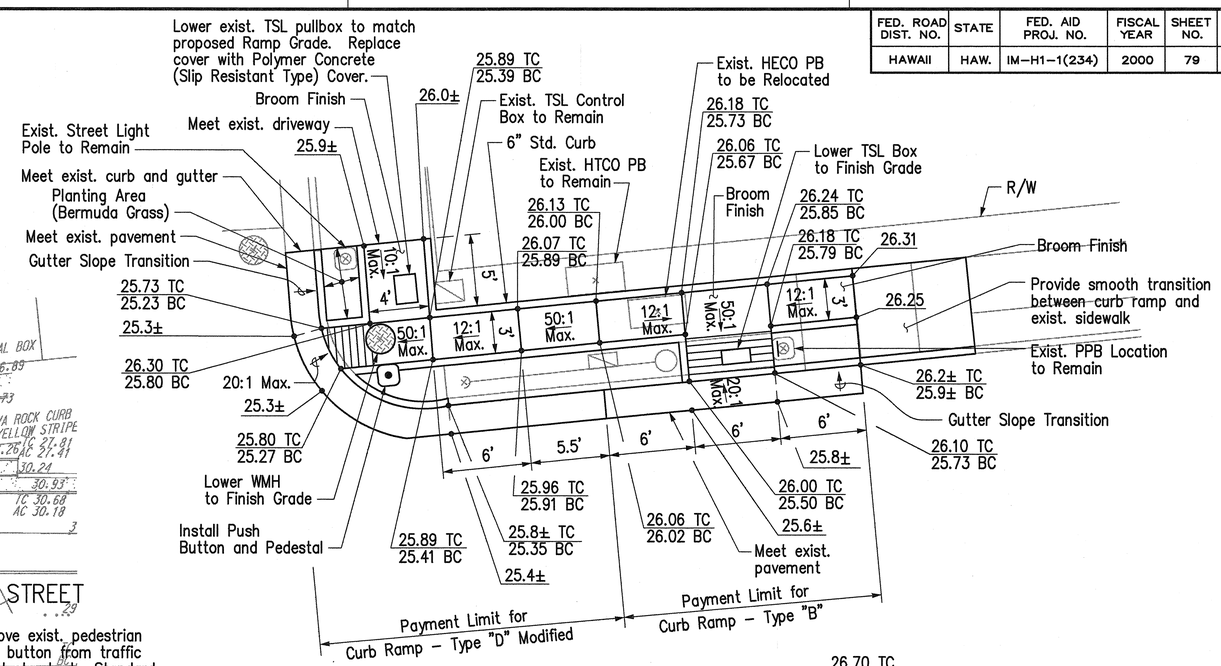

DETAIL A

Scale: 1" = 5'

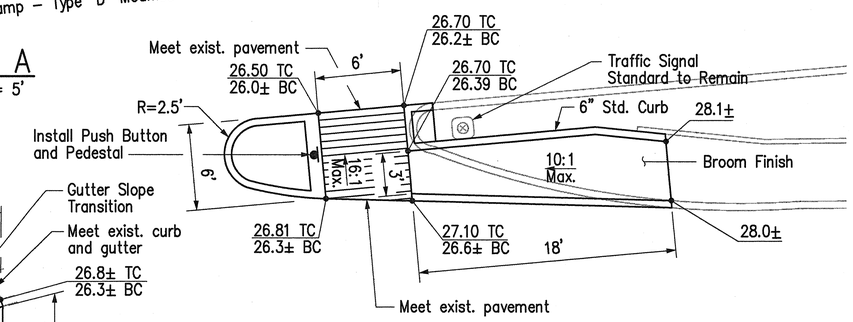

DETAIL D

Curb Ramp – Type "C"

Scale: 1" = 5'

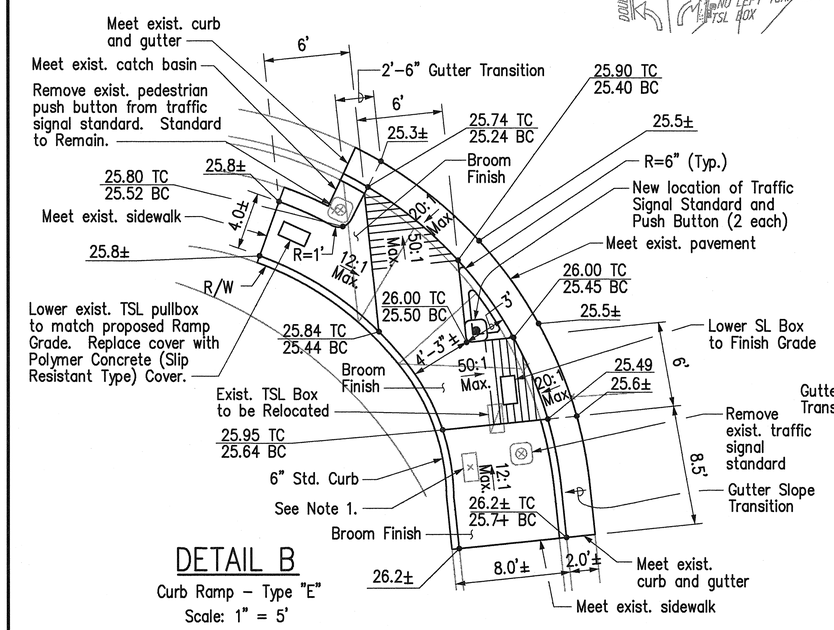

DETAIL B

Curb Ramp – Type "E"

Scale: 1" = 5'

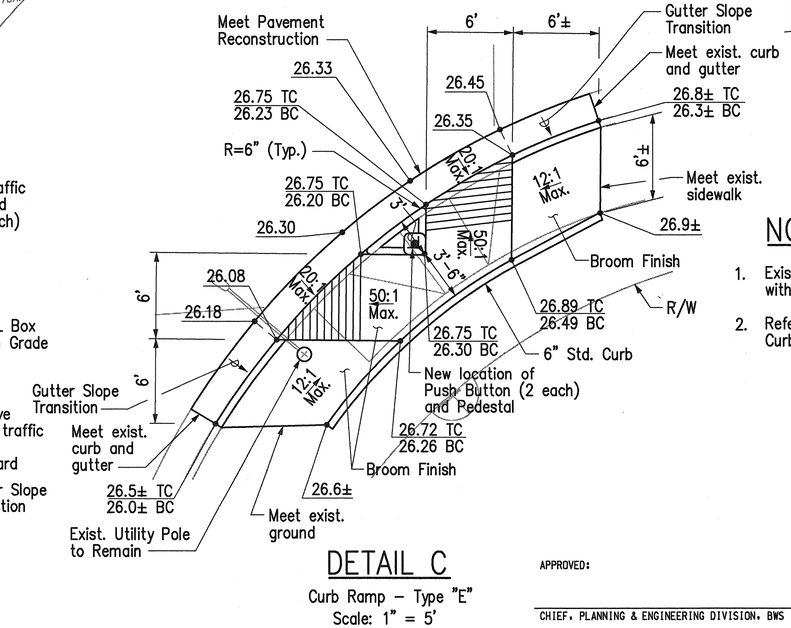

DETAIL C

Curb Ramp – Type "E"

Scale: 1" = 5'

NOTES:

1. Exist. FA Pullbox to be Removed. Fill hole with concrete. Match proposed finish grade.
2. Refer to Sheets CR-1 to CR-4 for Typical Curb Ramp Details.

APPROVED:

CHIEF, PLANNING & ENGINEERING DIVISION, BWS DATE

BENJAMIN S. TANAKA LICENSED PROFESSIONAL ENGINEER No. 2055-C HAWAII, U.S.A.

THIS WORK WAS PREPARED BY ME OR UNDER MY SUPERVISION.

STATE OF HAWAII
DEPARTMENT OF TRANSPORTATION
HIGHWAYS DIVISION

DETAILED ROADWAY PLAN
KEEAUMOKU STREET

INTERSTATE ROUTE H-1 RESURFACING
Vic. of Punchbowl Off Ramp to Kapiolani IC
F.A.I Project No. IM-H1-1(234)

Scale: 1" = 20' Date: June 1, 1999

SHEET No. DR17 OF 54 SHEETS

ORIGINAL PLAN | SURVEY PLOTTED BY | PLANS PREPARED BY | DESIGNED BY | QUANTITIES BY | CHECKED BY | DATE | NO. | REVISION | NOTE BOOK

j:\hi-surf\kunalilo\align\a-k-01.dgn Tue Jul 20 11:33:29 1999

FED. ROAD DIST. NO.	STATE	FED. AID PROJ. NO.	FISCAL YEAR	SHEET NO.	TOTAL SHEETS
HAWAII	HAW.	IM-H1-1(234)	2000	80	557

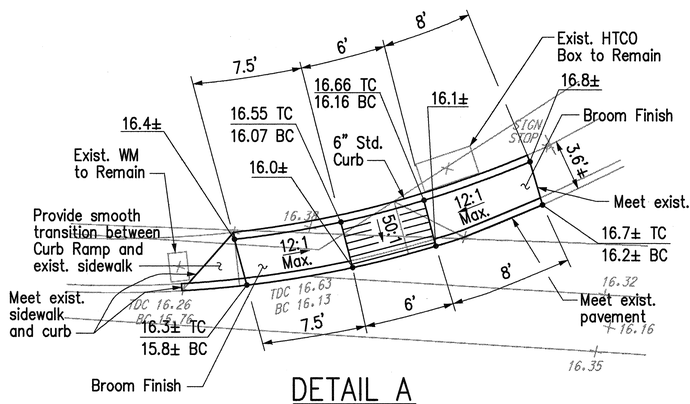

DETAIL A

Curb Ramp – Type "B"
Scale: 1" = 5'

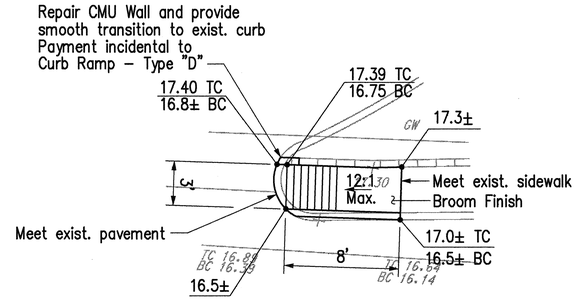

DETAIL B

Curb Ramp – Type "D"
Scale: 1" = 5'

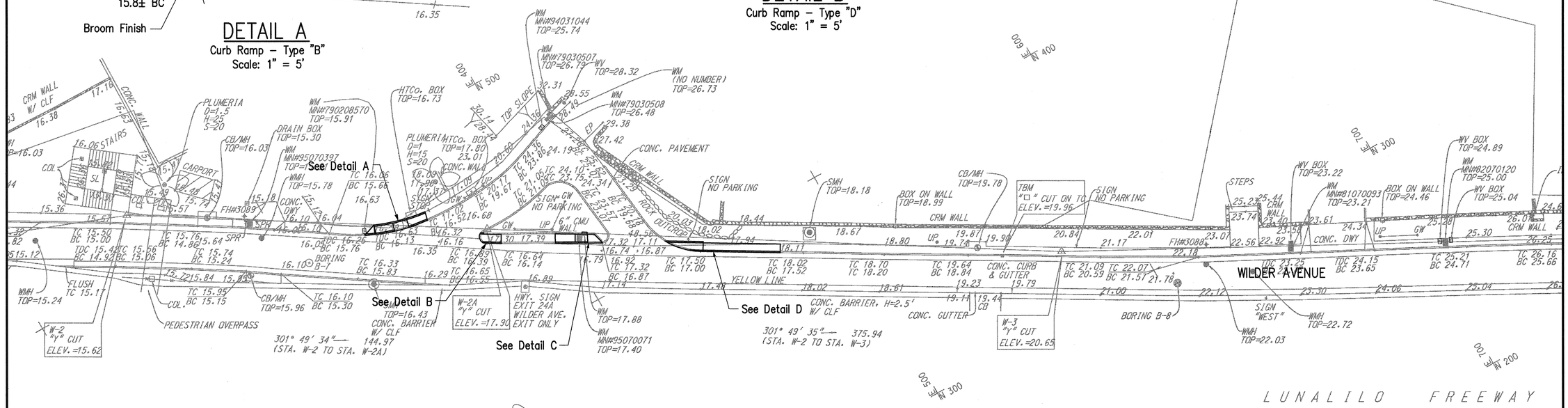

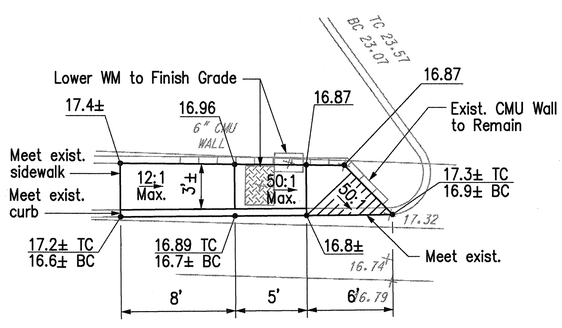

DETAIL C

Curb Ramp – Type "D"
Scale: 1" = 5'

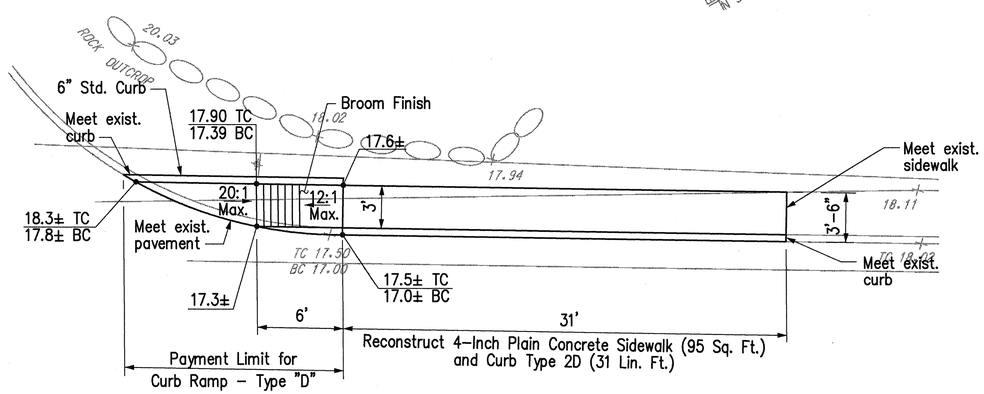

DETAIL D

Scale: 1" = 5'

NOTE:

1. Refer to Sheets CR-1 to CR-4 for Typical Curb Ramp Details.
2. Proposed BWS Water Main not shown. Refer to Sheets W33 and W34 for Details.

BENJAMIN S. TANAKA
LICENSED PROFESSIONAL ENGINEER
No. 2055-C
HAWAII, U.S.A.

THIS WORK WAS PREPARED BY ME OR UNDER MY SUPERVISION.

STATE OF HAWAII
DEPARTMENT OF TRANSPORTATION
HIGHWAYS DIVISION

DETAILED ROADWAY PLAN
WILDER AVENUE

INTERSTATE ROUTE H-1 RESURFACING
Vic. of Punchbowl Off Ramp to Kapiolani IC
F.A.I Project No. IM-H1-1(234)
Scale: 1" = 20' Date: June 1, 999

SHEET No.DR18OF 54 SHEETS

j:\hi-surf\wilder\align\a-wld-02.dgn Tue May 25 10:34:16 1999

SURVEY PLOTTED BY
DRAWN BY
TRACED BY
DESIGNED BY
QUANTITIES BY
CHECKED BY
DATE
ORIGINAL PLAN
NOTE BOOK
No.

FED. ROAD DIST. NO.	STATE	FED. AID PROJ. NO.	FISCAL YEAR	SHEET NO.	TOTAL SHEETS
HAWAII	HAW.	IM-H1-1(234)	2000	81	557

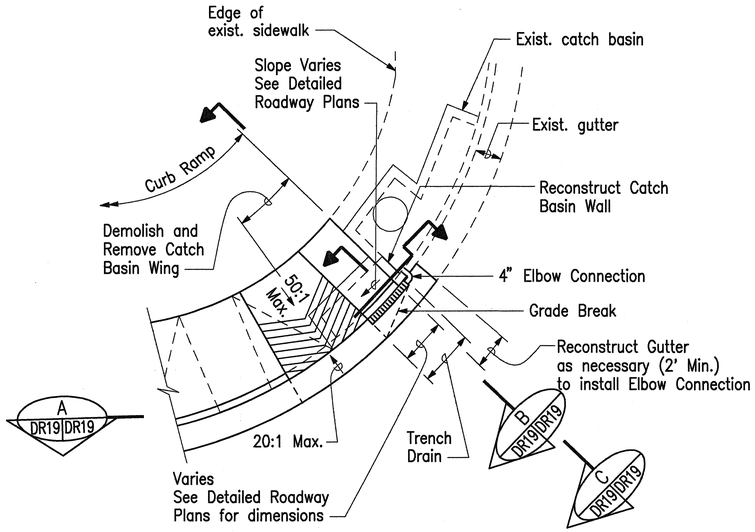

PLAN – CURB RAMP TYPE – "B-1"
Scale: 1" = 5'

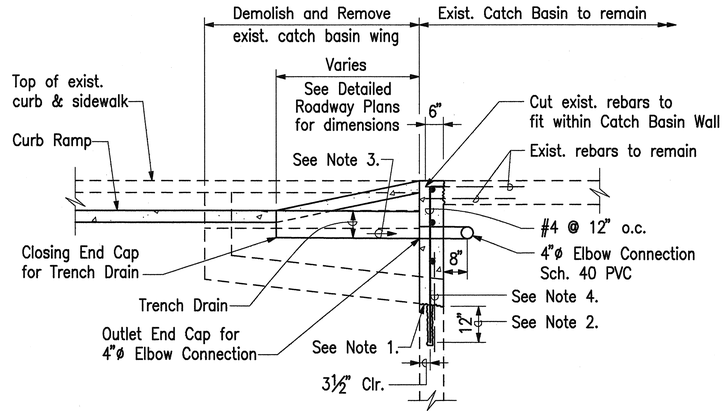

SECTION A DR19 DR19
Scale: ½" = 1'-0"

CURB RAMP – TYPE "B-1" NOTES:

1. The interface between new and old concrete shall be cleaned free of laitance and roughened to full amplitude of ¼". Epoxy bonding material shall be applied to the roughened surface immediately prior to pouring new concrete.
2. Drill 1"ø x 12" deep hole, clean the hole and fill ⅔ full with epoxy grout and insert #4 reinforcing bar.
3. Drains shall have a minimum internal slope of 0.6%.
4. Straighten existing reinforcement into new concrete.
5. Payment for trench drain, elbow connection, and Reconstruction of Catch Basin Wall shall be incidental to Curb Ramp.
6. Grate shall be medium duty galvanized steel suitable for auto, light truck or van traffic and shall be resistant to bicycle and wheelchair tires.
7. Payment for furnishing and installing of trench drain, grate and 4" PVC, removal of catch basin wing, and reconstruction of catch basin wall shall be incidental to Curb Ramp – Type "B-1."

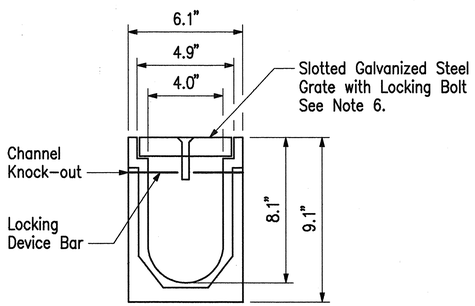

TRENCH DRAIN DETAIL
Not to Scale

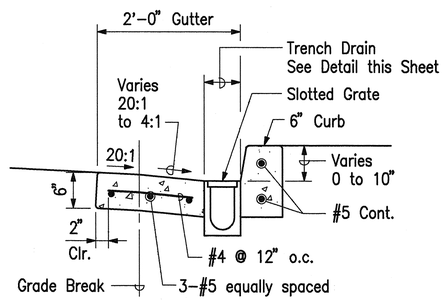

SECTION B DR19 DR19
Scale: 1" = 1'-0"

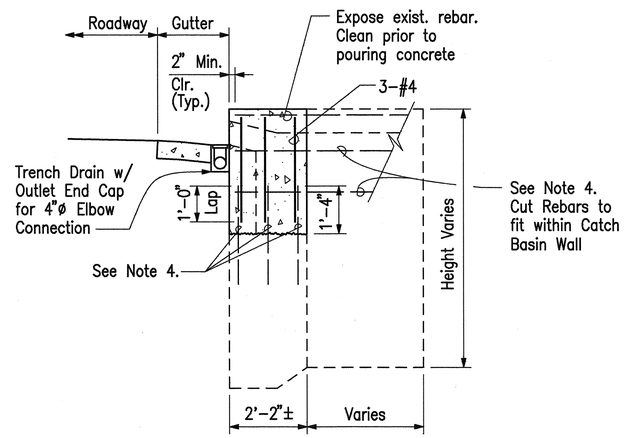

SECTION C DR19 DR19
Scale: ½" = 1'-0"

CURB RAMP – TYPE "B-1"

ORIGINAL PLAN	SURVEY PLOTTED BY	DATE
	DRAWN BY	
	TRACED BY	
NOTE BOOK	DESIGNED BY	
	QUANTITIES BY	
No.	CHECKED BY	

CAD by J. Mimura, 55-52

BENJAMIN S. TANAKA LICENSED PROFESSIONAL ENGINEER No. 2055-C HAWAII, U.S.A.

THIS WORK WAS PREPARED BY ME OR UNDER MY SUPERVISION.

STATE OF HAWAII
DEPARTMENT OF TRANSPORTATION
HIGHWAYS DIVISION

DETAILED ROADWAY PLAN

INTERSTATE ROUTE H-1 RESURFACING
Vic. of Punchbowl Off Ramp to Kapiolani IC
F.A.I. Project No. IM-H1-1(234)

Scale: AS SHOWN Date: June 1, 1999

SHEET No. DR19 OF 54 SHEETS

Last Saved: J:\H1-SURF\WARD\DET\CURBDET1.DWG.dwg 05/25/99 at 11:19

FED. ROAD DIST. NO.	STATE	FED. AID PROJ. NO.	FISCAL YEAR	SHEET NO.	TOTAL SHEETS
HAWAII	HAW.	IM-H1-1(234)	2000	82	557

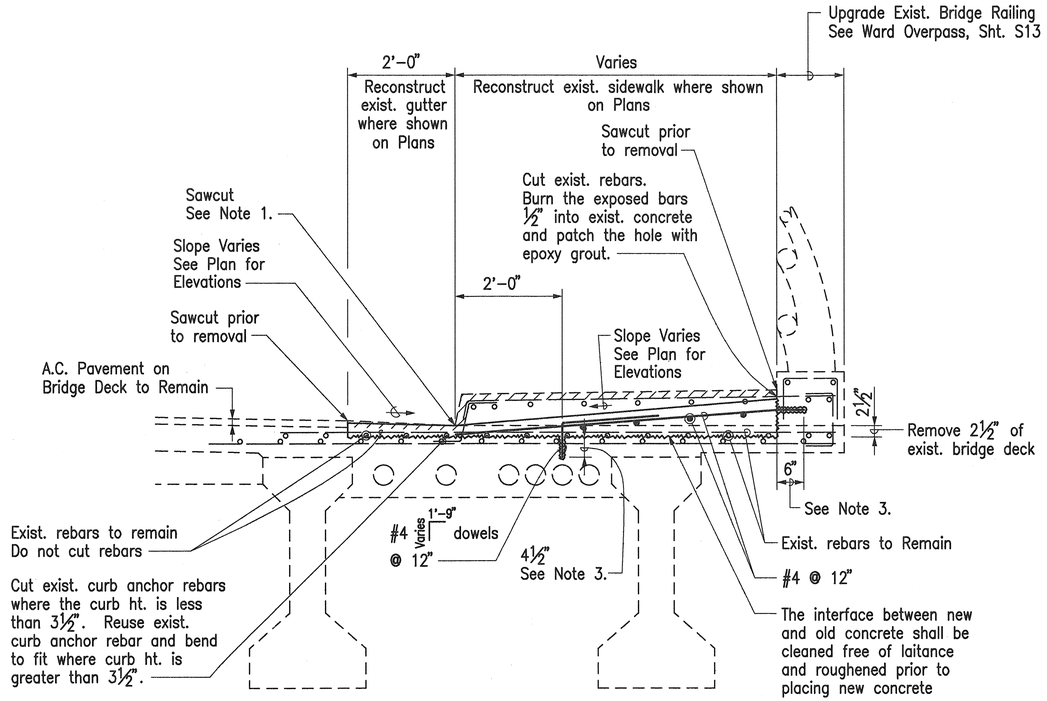

RECONSTRUCTION OF CURB RAMP
ON WARD AVENUE OVERPASS
Scale: 3/4" = 1'-0"

RECONSTRUCTION OF CURB RAMP ON WARD AVENUE NOTES:

1. In locations where only the gutter or only the sidewalk is to be reconstructed, the Contractor shall sawcut at this location prior to removal. Do not cut the existing rebars.
2. Payment for reconstruction of curb ramps on Ward Avenue Overpass shall be incidental to appropriate Curb Ramp Type shown in the Plans.
3. Drill 7/8"ø holes @ 12" o.c. for #4 rebars. Clean the hole and fill the drilled hole with epoxy grout and insert #4 rebars. The holes for rebars shall be drilled perpendicular to the existing concrete surface. When the drill contacts any existing rebar, the hole shall be filled with epoxy grout and a replacement hole shall be drilled so that the spacing of the rebars will be maintained. Contractor shall avoid cutting existing rebar.
4. The exposed rebars to remain and to be reused shall be cleaned prior to placing concrete.

ORIGINAL PLAN	SURVEY PLOTTED BY	DATE
	DRAWN BY	
	TRACED BY	
NOTE BOOK	DESIGNED BY	
	QUANTITIES BY	
No.	CHECKED BY	

CAD by J. Mimura, 55-52

BENJAMIN S. TANAKA
LICENSED PROFESSIONAL ENGINEER
No. 2055-C
HAWAII, U.S.A.

THIS WORK WAS PREPARED BY ME OR UNDER MY SUPERVISION.

Benjamin S. Tanaka

STATE OF HAWAII
DEPARTMENT OF TRANSPORTATION
HIGHWAYS DIVISION

DETAILED ROADWAY PLAN

INTERSTATE ROUTE H-1 RESURFACING
Vic. of Punchbowl Off Ramp to Kapiolani IC
F.A.I. Project No. IM-H1-1(234)

Scale: AS SHOWN Date: June 1, 1999

SHEET No. DR20 OF 54 SHEETS

Last Saved: J:\H1-SURF\WARD\DET\CURBDET2.DWG.dwg 06/21/99 at 14:09

FED. ROAD DIST. NO.	STATE	FED. AID PROJ. NO.	FISCAL YEAR	SHEET NO.	TOTAL SHEETS
HAWAII	HAW.	IM-H1-1(234)	2000	83	557

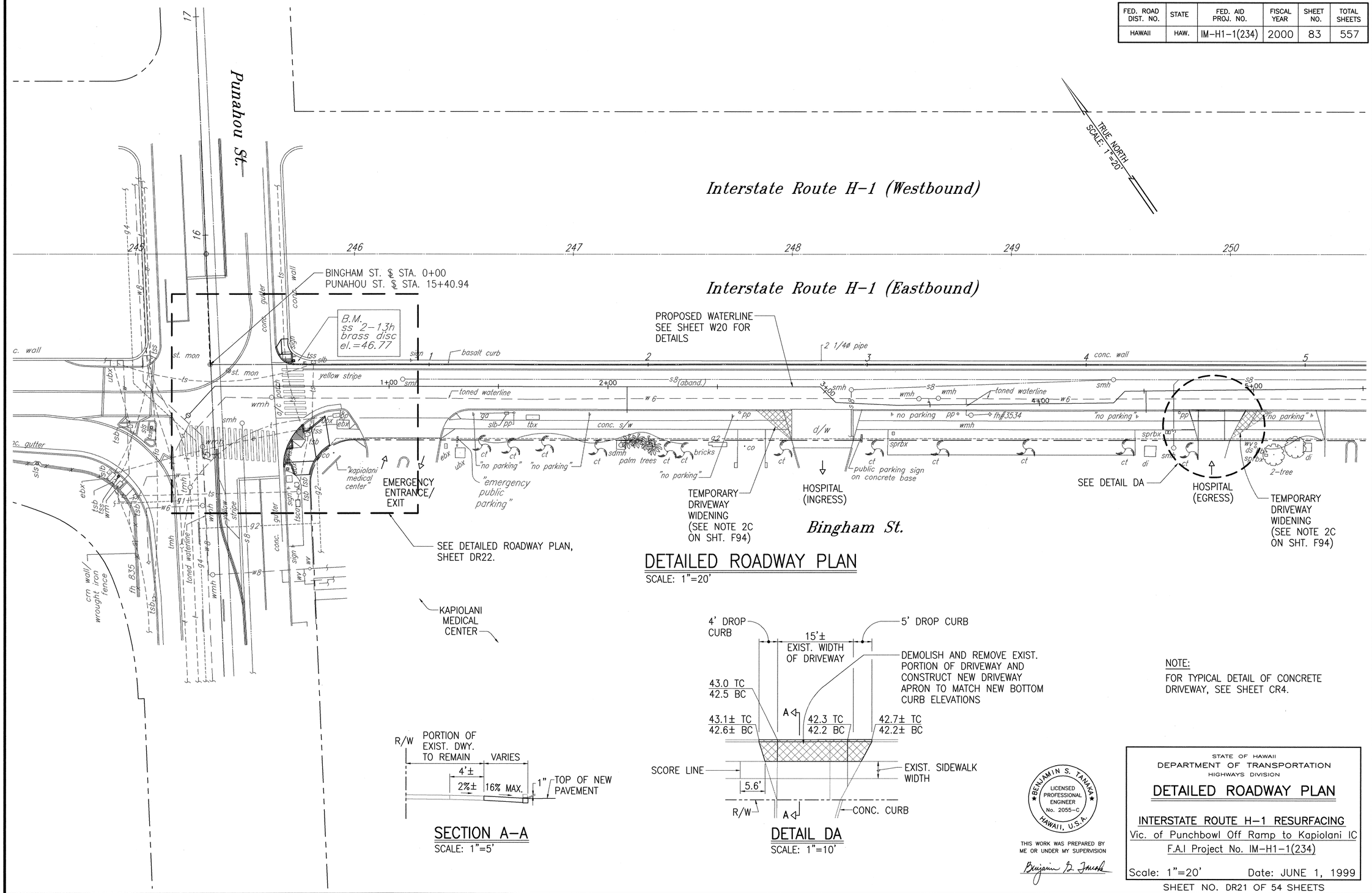

DETAILED ROADWAY PLAN

SCALE: 1"=20'

SECTION A-A

SCALE: 1"=5'

DETAIL DA

SCALE: 1"=10'

NOTE:

FOR TYPICAL DETAIL OF CONCRETE DRIVEWAY, SEE SHEET CR4.

BENJAMIN S. TANAKA
LICENSED PROFESSIONAL ENGINEER
No. 2055-C
HAWAII, U.S.A.

THIS WORK WAS PREPARED BY ME OR UNDER MY SUPERVISION

Benjamin S. Tanaka

STATE OF HAWAII
DEPARTMENT OF TRANSPORTATION
HIGHWAYS DIVISION

DETAILED ROADWAY PLAN

INTERSTATE ROUTE H-1 RESURFACING
Vic. of Punchbowl Off Ramp to Kapiolani IC
F.A.I Project No. IM-H1-1(234)

Scale: 1"=20' Date: JUNE 1, 1999

SHEET NO. DR21 OF 54 SHEETS

ORIGINAL PLAN	SURVEY PLOTTED BY	DATE
	DRAWN BY	
	TRACED BY	
NOTEBOOK	DESIGNED BY	
	QUANTITIES BY	
No.	CHECKED BY	

FN: 98-35\SHT1.DWG
07/99

FED. ROAD DIST. NO.	STATE	FED. AID PROJ. NO.	FISCAL YEAR	SHEET NO.	TOTAL SHEETS
HAWAII	HAW.	IM-H1-1(234)	2000	84	557

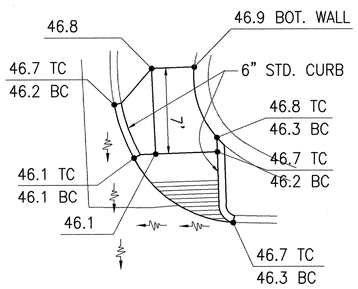

DETAIL RA

SCALE: 1"=5'

CURB RAMP-TYPE "D" MODIFIED

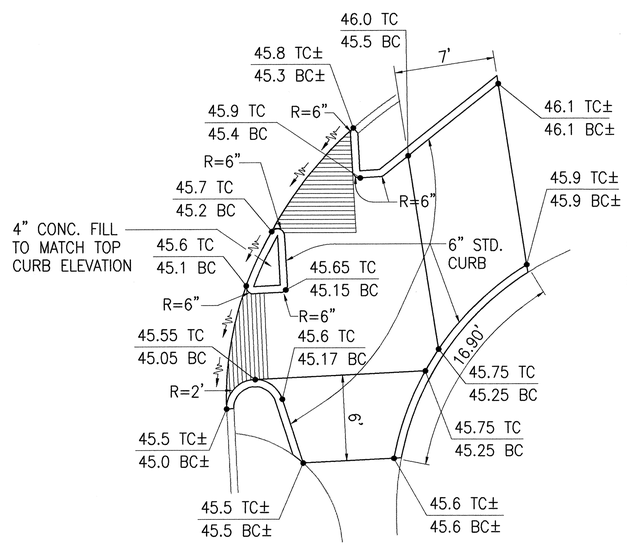

DETAIL RB

SCALE: 1"=5'

CURB RAMP-TYPE "E" MODIFIED

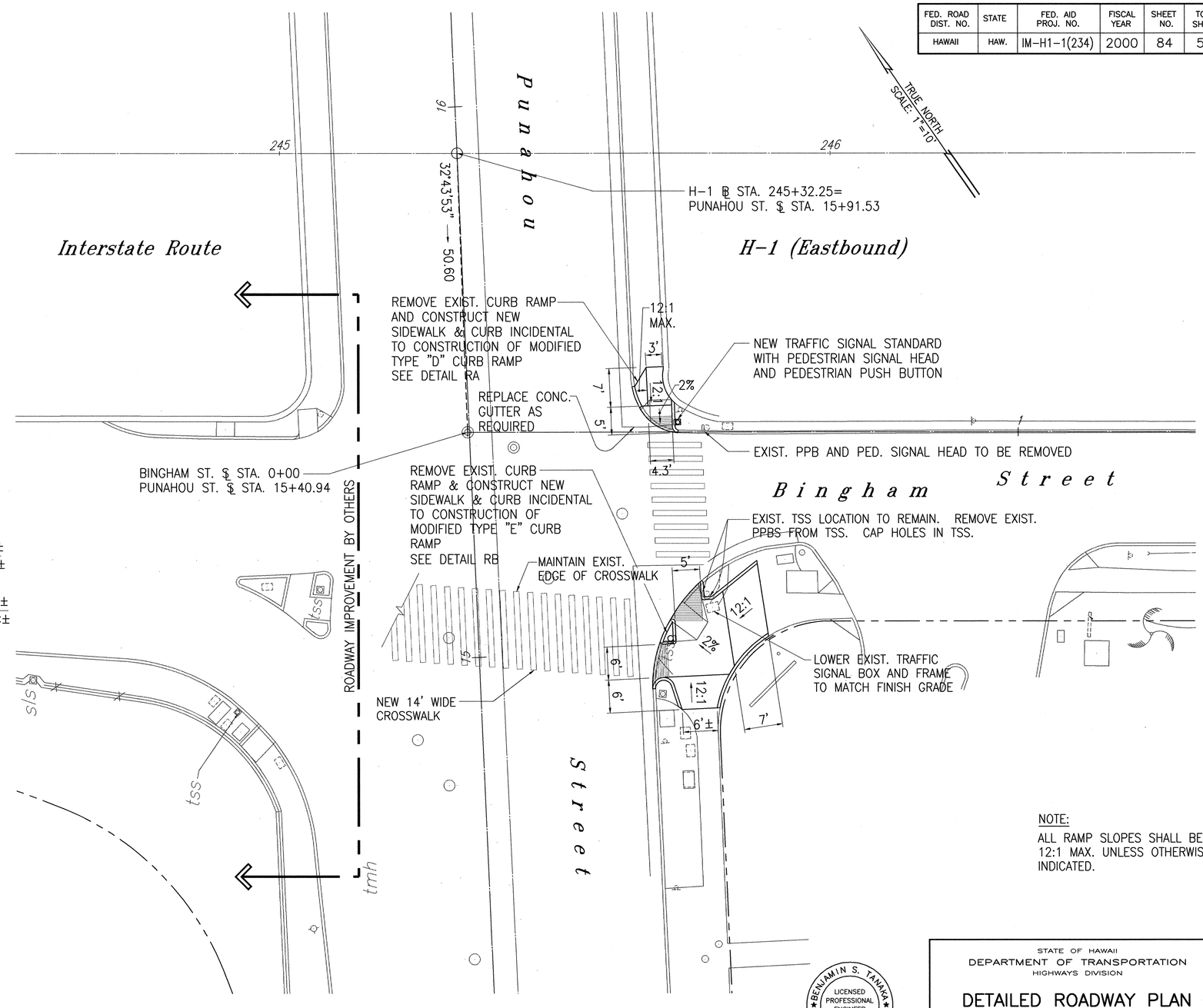

NOTE:

ALL RAMP SLOPES SHALL BE 12:1 MAX. UNLESS OTHERWISE INDICATED.

DETAILED ROADWAY PLAN
BINGHAM ST./PUNAHOU ST.

SCALE: 1"=10'

BENJAMIN S. TANAKA
LICENSED PROFESSIONAL ENGINEER
No. 2055-C
HAWAII, U.S.A.

THIS WORK WAS PREPARED BY ME OR UNDER MY SUPERVISION

STATE OF HAWAII
DEPARTMENT OF TRANSPORTATION
HIGHWAYS DIVISION

DETAILED ROADWAY PLAN

INTERSTATE ROUTE H-1 RESURFACING

Vic. of Punchbowl Off Ramp to Kapiolani IC

F.A.I Project No. IM-H1-1(234)

Scale: 1"=10' Date: JUNE 1, 1999

SHEET NO. DR22 OF 54 SHEETS

ORIGINAL PLAN	SURVEY PLOTTED BY	DATE
	DRAWN BY	
	TRACED BY	
NOTEBOOK	DESIGNED BY	
	QUANTITIES BY	
No.	CHECKED BY	

FN: 98-35\NTDET1.DWG
07/27/99

FED. ROAD DIST. NO.	STATE	FED. AID PROJ. NO.	FISCAL YEAR	SHEET NO.	TOTAL SHEETS
HAWAII	HAW.	IM-H1-1(234)	2000	85	557

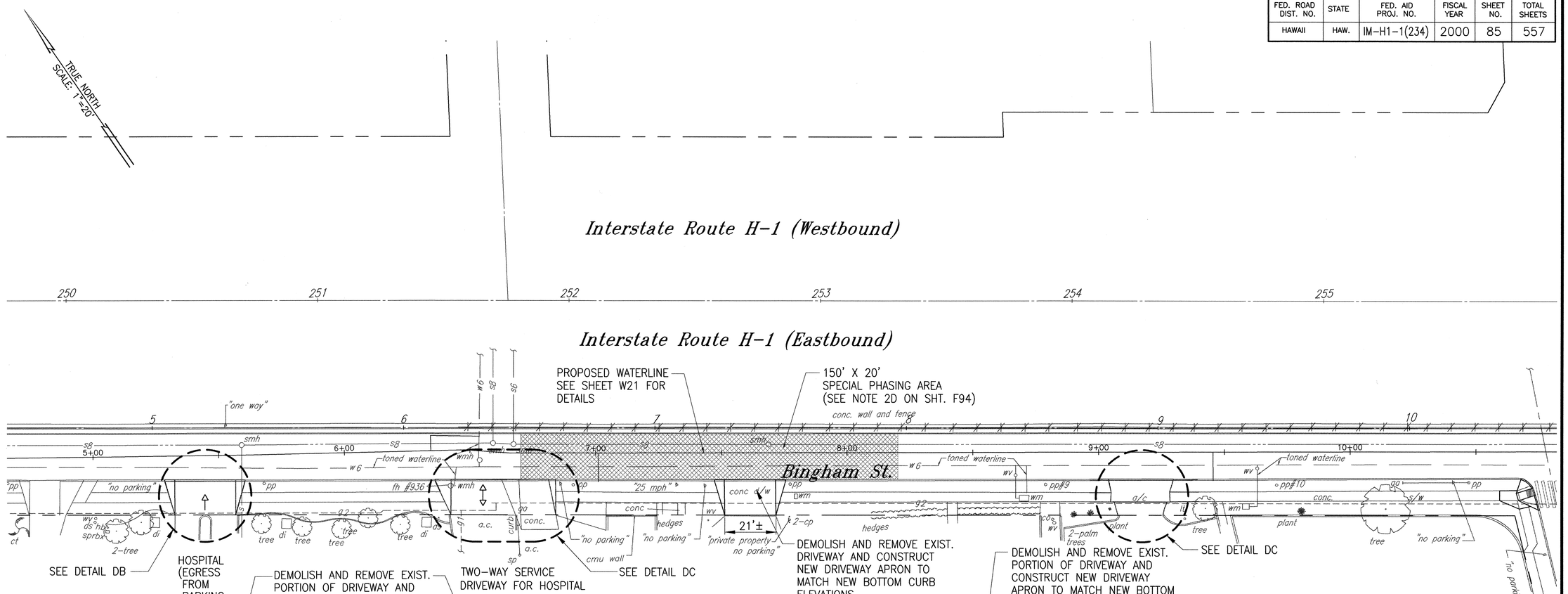

NOTE:
FOR TYPICAL DETAIL OF CONCRETE DRIVEWAY, SEE SHEET CR4.

BENJAMIN S. TANAKA
LICENSED PROFESSIONAL ENGINEER
No. 2055-C
HAWAII, U.S.A.

THIS WORK WAS PREPARED BY ME OR UNDER MY SUPERVISION

STATE OF HAWAII
DEPARTMENT OF TRANSPORTATION
HIGHWAYS DIVISION

DETAILED ROADWAY PLAN

INTERSTATE ROUTE H-1 RESURFACING
Vic. of Punchbowl Off Ramp to Kapiolani IC
F.A.I Project No. IM-H1-1(234)

Scale: 1"=20' Date: JUNE 1, 1999

SHEET NO. DR23 OF 54 SHEETS

FN: 98-35\SHT2.DWG
071999

ORIGINAL PLAN	SURVEY PLOTTED BY	DATE
	DRAWN BY	
	TRACED BY	
NOTEBOOK	DESIGNED BY	
	QUANTITIES BY	
No.	CHECKED BY	

FED. ROAD DIST. NO.	STATE	FED. AID PROJ. NO.	FISCAL YEAR	SHEET NO.	TOTAL SHEETS
HAWAII	HAW.	IM-H1-1(234)	2000	86	557

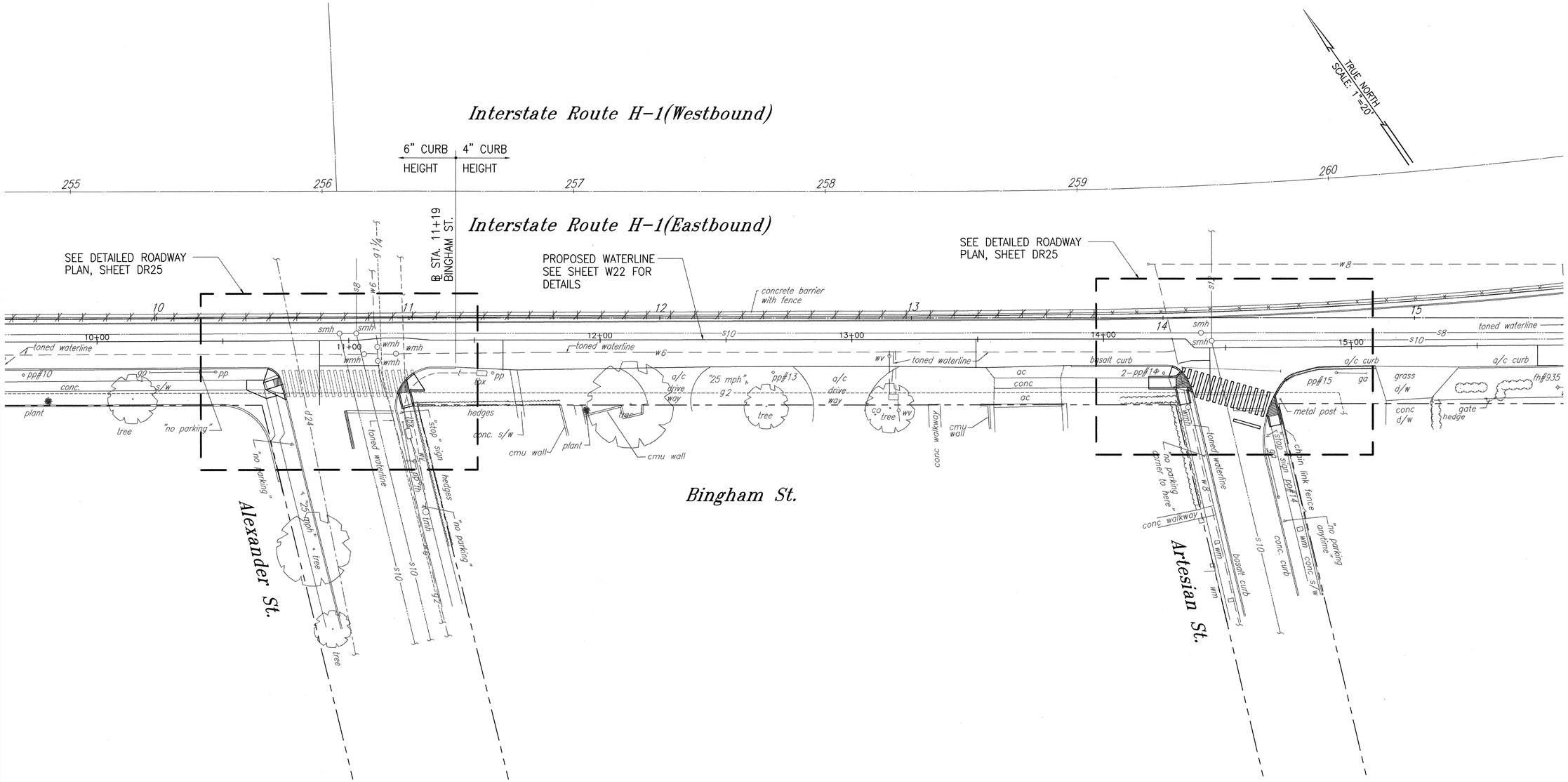

DETAILED ROADWAY PLAN

SCALE: 1"=20'

STATE OF HAWAII
DEPARTMENT OF TRANSPORTATION
HIGHWAYS DIVISION

DETAILED ROADWAY PLAN

INTERSTATE ROUTE H-1 RESURFACING
Vic. of Punchbowl Off Ramp to Kapiolani IC
F.A.I Project No. IM-H1-1(234)

Scale: 1"=20' Date: JUNE 1, 1999

SHEET NO. DR24 OF 54 SHEETS

BENJAMIN S. TANAKA
LICENSED PROFESSIONAL ENGINEER
No. 2055-C
HAWAII, U.S.A.

THIS WORK WAS PREPARED BY ME OR UNDER MY SUPERVISION

Benjamin S. Tanaka

SURVEY PLOTTED BY	DATE
DRAWN BY	"
TRACED BY	"
DESIGNED BY	"
QUANTITIES BY	"
CHECKED BY	"
ORIGINAL PLAN	
NOTEBOOK	
No.	

FN: 98-35\SHT3.DWG
60-198

FED. ROAD DIST. NO.	STATE	FED. AID PROJ. NO.	FISCAL YEAR	SHEET NO.	TOTAL SHEETS
HAWAII	HAW.	IM-H1-1(234)	2000	87	557

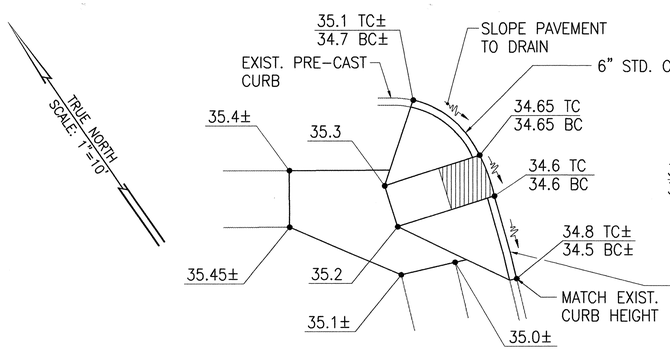

DETAIL RC

SCALE: 1"=5'
CURB RAMP-TYPE "A"

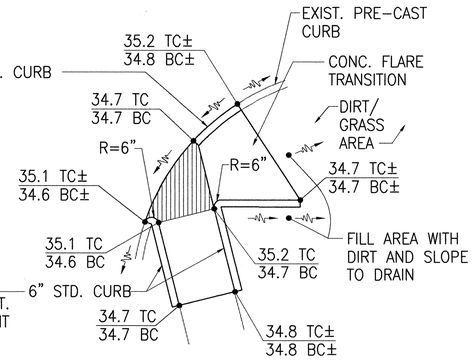

DETAIL RD

SCALE: 1"=5'
CURB RAMP-TYPE "D" MODIFIED

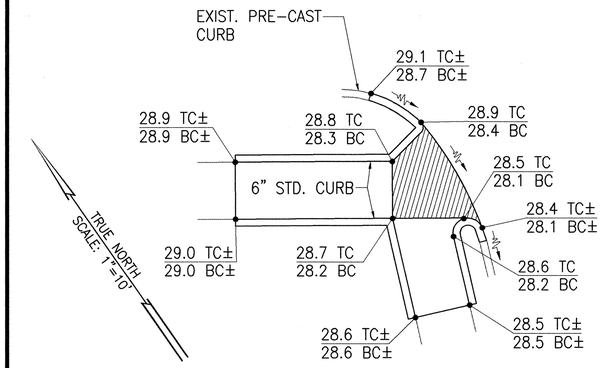

DETAIL RE

SCALE: 1"=5'
CURB RAMP-TYPE "D" MODIFIED

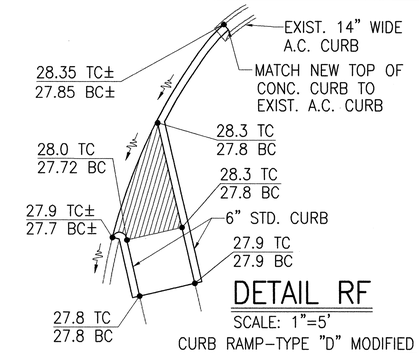

DETAIL RF

SCALE: 1"=5'
CURB RAMP-TYPE "D" MODIFIED

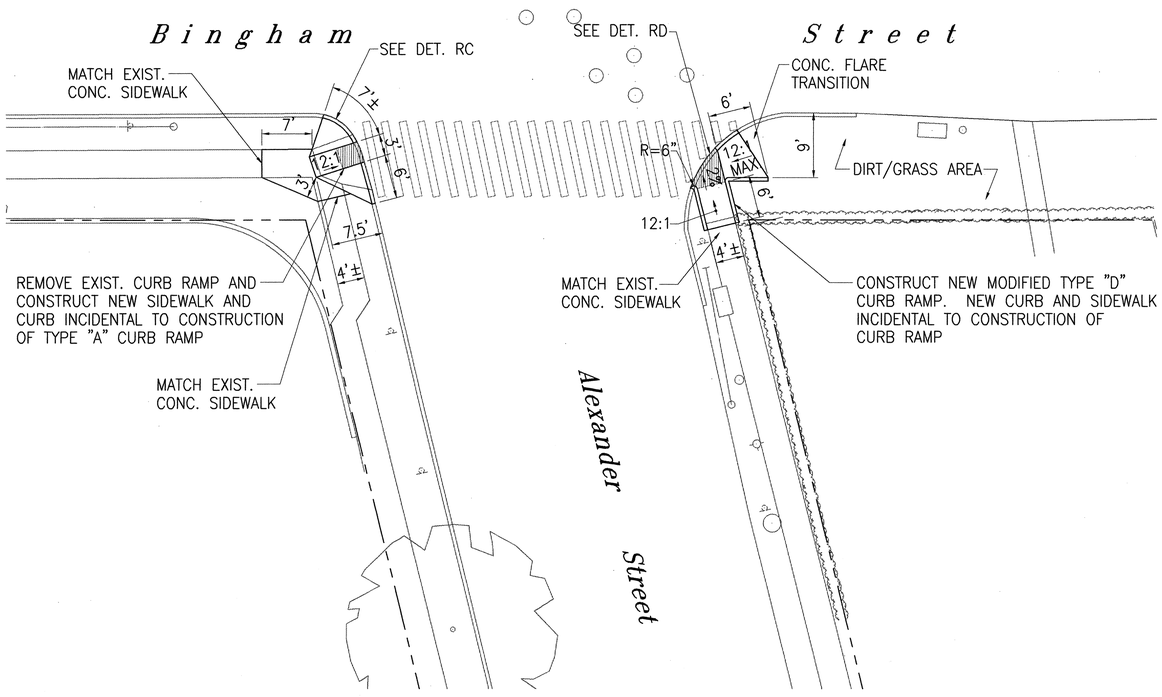

DETAILED ROADWAY PLAN
BINGHAM ST./ALEXANDER ST.

SCALE: 1"=10'

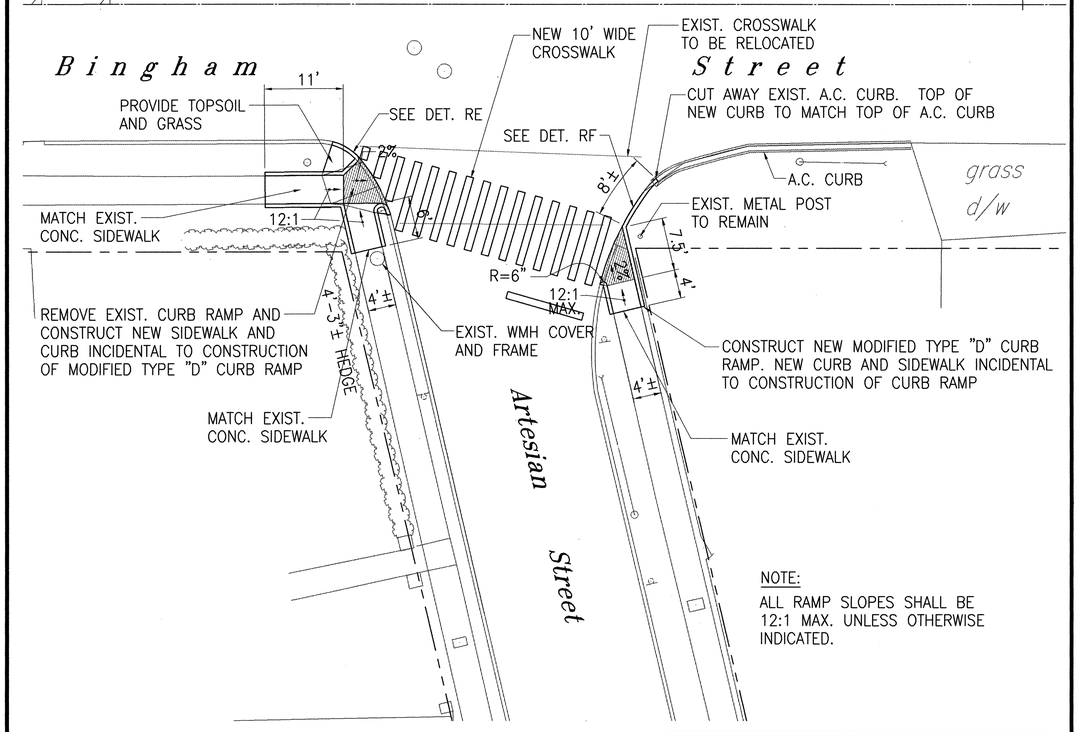

NOTE:
ALL RAMP SLOPES SHALL BE 12:1 MAX. UNLESS OTHERWISE INDICATED.

DETAILED ROADWAY PLAN
BINGHAM ST./ARTESIAN ST.

SCALE: 1"=10'

BENJAMIN S. TANAKA
LICENSED PROFESSIONAL ENGINEER
No. 2055-C
HAWAII, U.S.A.

THIS WORK WAS PREPARED BY ME OR UNDER MY SUPERVISION

Benjamin S. Tanaka

STATE OF HAWAII
DEPARTMENT OF TRANSPORTATION
HIGHWAYS DIVISION

DETAILED ROADWAY PLAN

INTERSTATE ROUTE H-1 RESURFACING
Vic. of Punchbowl Off Ramp to Kapiolani IC
F.A.I Project No. IM-H1-1(234)
Scale: 1"=10' Date: JUNE 1, 1999

SHEET NO. DR25 OF 54 SHEETS

ORIGINAL PLAN	SURVEY PLOTTED BY	DATE
	DRAWN BY	
NOTEBOOK	TRACED BY	
	DESIGNED BY	
No.	QUANTITIES BY	
	CHECKED BY	

F:\h-98-35\NTDET2.DWG
05/20/99

FED. ROAD DIST. NO.	STATE	FED. AID PROJ. NO.	FISCAL YEAR	SHEET NO.	TOTAL SHEETS
HAWAII	HAW.	IM-H1-1(234)	2000	88	557

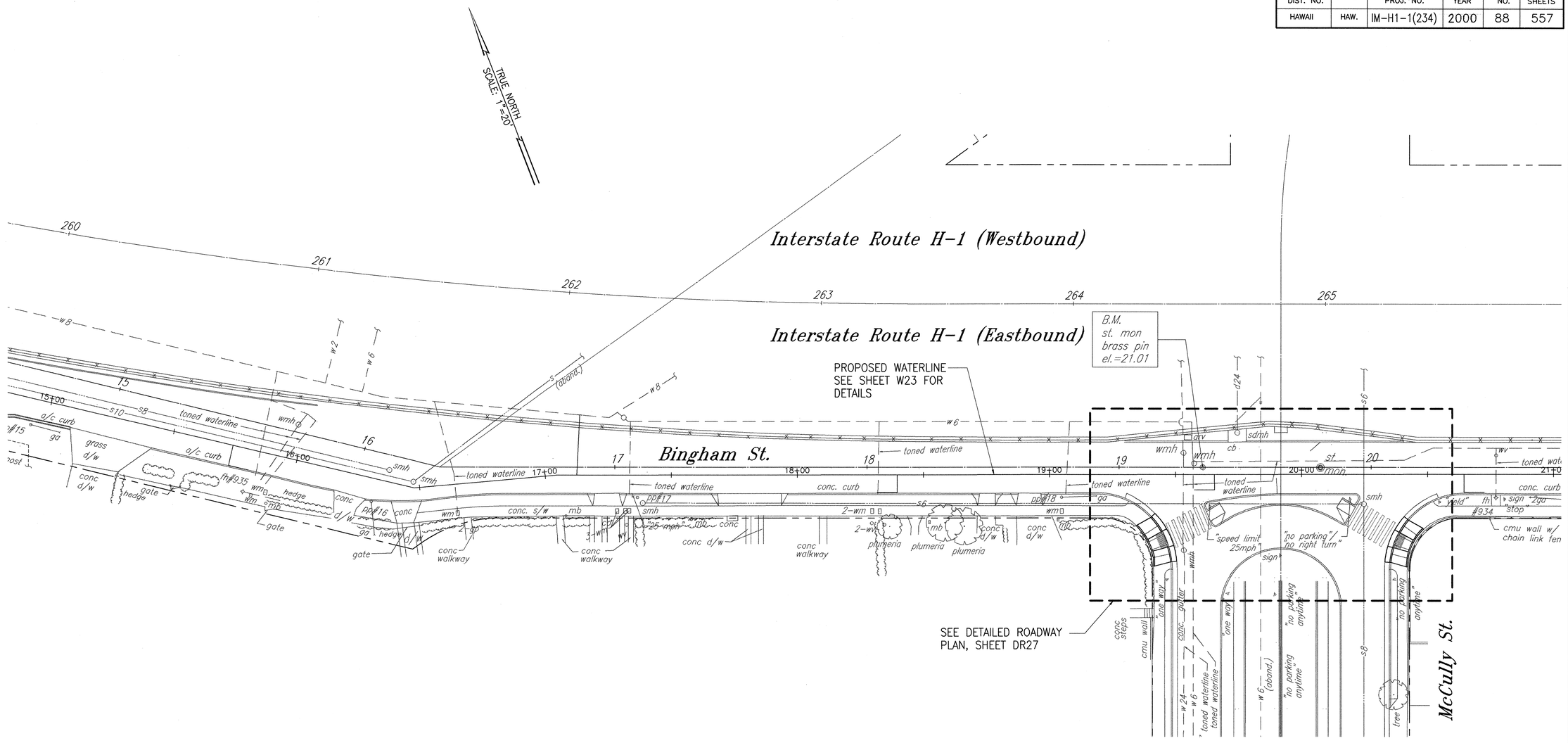

DETAILED ROADWAY PLAN

SCALE: 1"=20'

FN: 98-35\SHT4.DWG
03/1999

SURVEY PLOTTED BY	
DRAWN BY	
TRACED BY	
DESIGNED BY	
QUANTITIES BY	
CHECKED BY	
DATE	
ORIGINAL PLAN	
NOTEBOOK	
No.	

BENJAMIN S. TANAKA
LICENSED PROFESSIONAL ENGINEER
No. 2055-C
HAWAII, U.S.A.

THIS WORK WAS PREPARED BY ME OR UNDER MY SUPERVISION

STATE OF HAWAII
DEPARTMENT OF TRANSPORTATION
HIGHWAYS DIVISION

DETAILED ROADWAY PLAN

INTERSTATE ROUTE H-1 RESURFACING
Vic. of Punchbowl Off Ramp to Kapiolani IC
F.A.I Project No. IM-H1-1(234)

Scale: 1"=20' Date: JUNE 1, 1999

SHEET NO. DR26 OF 54 SHEETS

FED. ROAD DIST. NO.	STATE	FED. AID PROJ. NO.	FISCAL YEAR	SHEET NO.	TOTAL SHEETS
HAWAII	HAW.	IM-H1-1(234)	2000	89	557

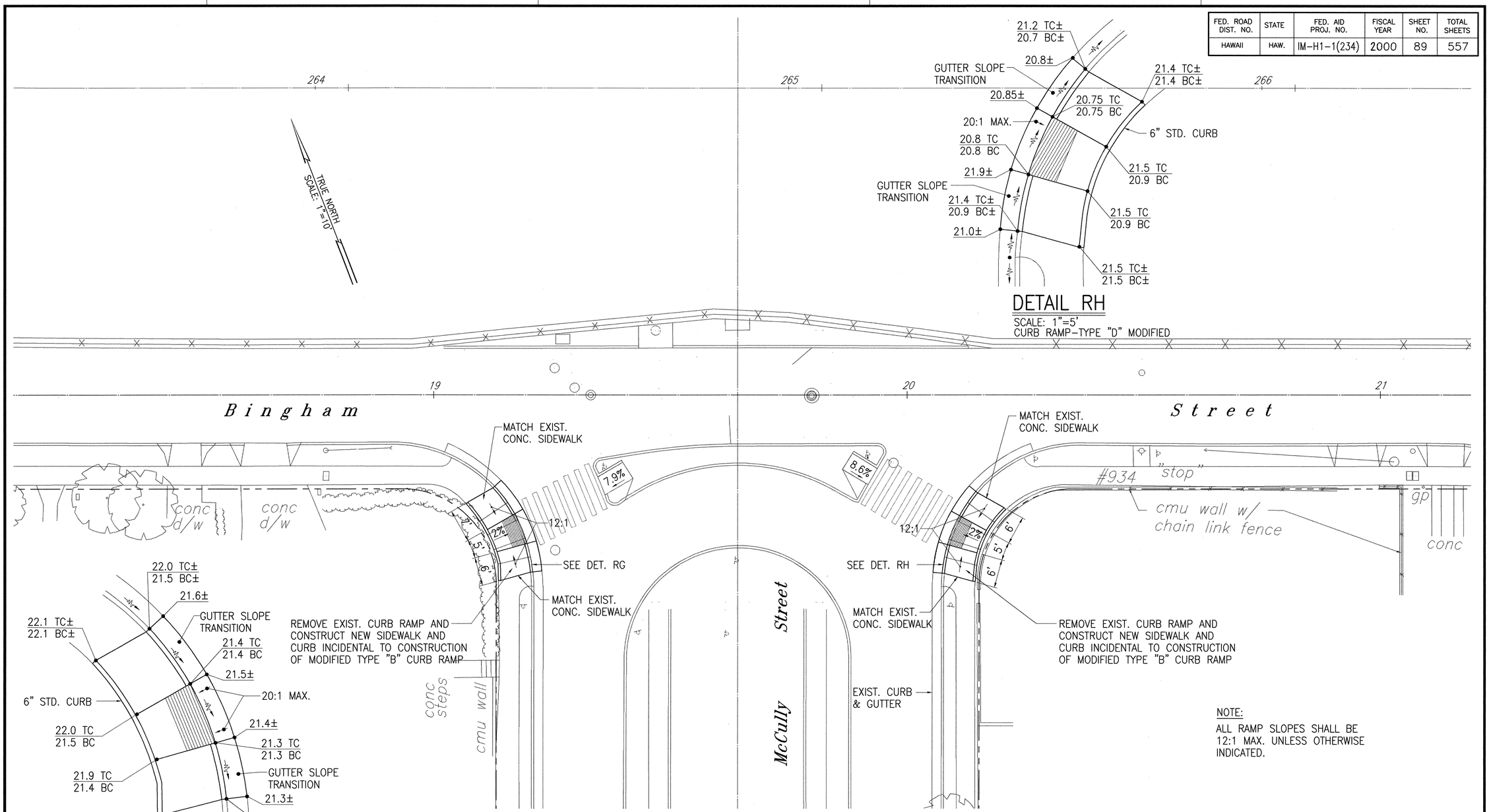

DETAIL RH

SCALE: 1"=5'
CURB RAMP-TYPE "D" MODIFIED

DETAIL RG

SCALE: 1"=5'
CURB RAMP-TYPE "B" MODIFIED

DETAILED ROADWAY PLAN
BINGHAM ST./McCULLY ST.

SCALE: 1"=10'

NOTE:
ALL RAMP SLOPES SHALL BE 12:1 MAX. UNLESS OTHERWISE INDICATED.

FN: 98-35\NTDET3.DWG
051199

ORIGINAL PLAN	SURVEY PLOTTED BY	DATE
	DRAWN BY	
	TRACED BY	
NOTEBOOK	DESIGNED BY	
	QUANTITIES BY	
No.	CHECKED BY	

BENJAMIN S. TANAKA
LICENSED PROFESSIONAL ENGINEER
No. 2055-C
HAWAII, U.S.A.

THIS WORK WAS PREPARED BY ME OR UNDER MY SUPERVISION

Benjamin S. Tanaka

STATE OF HAWAII
DEPARTMENT OF TRANSPORTATION
HIGHWAYS DIVISION

DETAILED ROADWAY PLAN

INTERSTATE ROUTE H-1 RESURFACING
Vic. of Punchbowl Off Ramp to Kapiolani IC
F.A.I Project No. IM-H1-1(234)
Scale: 1"=10' Date: JUNE 1, 1999
SHEET NO. DR27 OF 54 SHEETS

FED. ROAD DIST. NO.	STATE	FED. AID PROJ. NO.	FISCAL YEAR	SHEET NO.	TOTAL SHEETS
HAWAII	HAW.	IM-H1-1(234)	2000	90	557

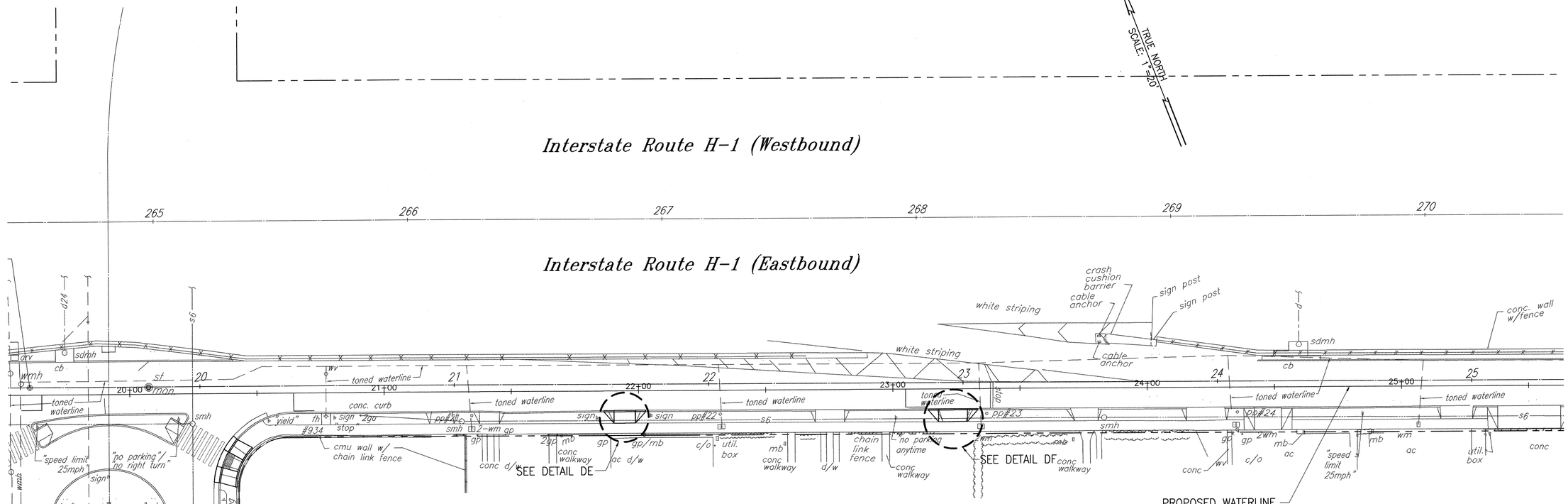

DETAILED ROADWAY PLAN

SCALE: 1"=20'

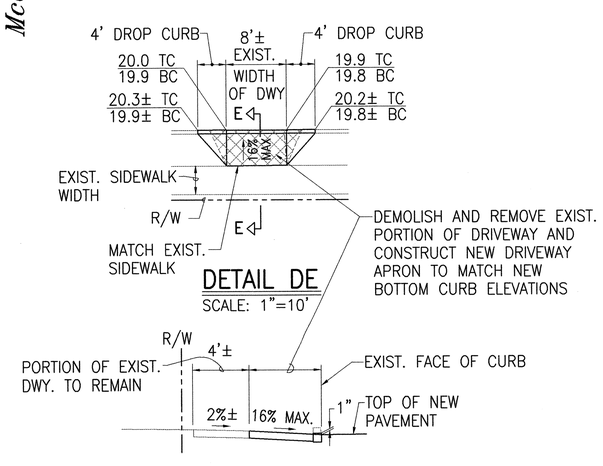

DETAIL DE

SCALE: 1"=10'

SECTION E-E

SCALE: 1"=5'

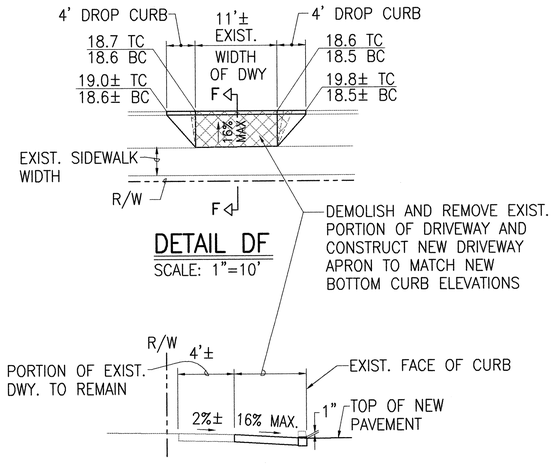

DETAIL DF

SCALE: 1"=10'

SECTION F-F

SCALE: 1"=5'

NOTE:
FOR TYPICAL DETAIL OF CONCRETE DRIVEWAY, SEE SHEET CR4.

BENJAMIN S. TANAKA
LICENSED PROFESSIONAL ENGINEER
No. 2055-C
HAWAII, U.S.A.

THIS WORK WAS PREPARED BY ME OR UNDER MY SUPERVISION

STATE OF HAWAII
DEPARTMENT OF TRANSPORTATION
HIGHWAYS DIVISION

DETAILED ROADWAY PLAN

INTERSTATE ROUTE H-1 RESURFACING
Vic. of Punchbowl Off Ramp to Kapiolani IC
F.A.I Project No. IM-H1-1(234)

Scale: 1"=20' Date: JUNE 1, 1999

SHEET NO. DR28 OF 54 SHEETS

FN: 98-35\SH15.DWG
052099

ORIGINAL PLAN	NOTEBOOK	No.

SURVEY PLOTTED BY
DRAWN BY
TRACED BY
DESIGNED BY
QUANTITIES BY
CHECKED BY
DATE

FED. ROAD DIST. NO.	STATE	FED. AID PROJ. NO.	FISCAL YEAR	SHEET NO.	TOTAL SHEETS
HAWAII	HAW.	IM-H1-1(234)	2000	91	557

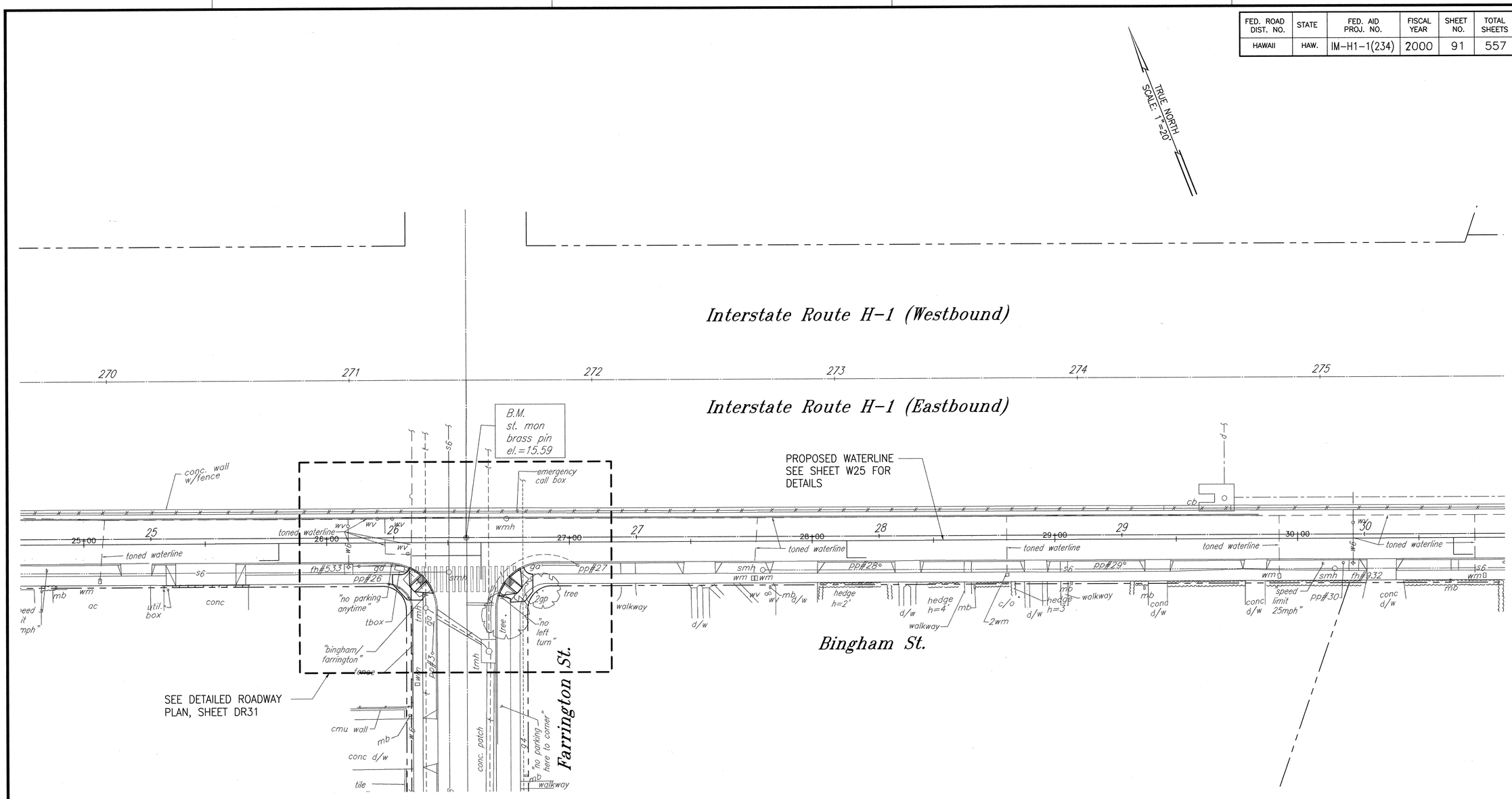

DETAILED ROADWAY PLAN

SCALE: 1"=20'

BENJAMIN S. TANAKA
LICENSED PROFESSIONAL ENGINEER
No. 2055-C
HAWAII, U.S.A.

THIS WORK WAS PREPARED BY ME OR UNDER MY SUPERVISION

STATE OF HAWAII
DEPARTMENT OF TRANSPORTATION
HIGHWAYS DIVISION

DETAILED ROADWAY PLAN

INTERSTATE ROUTE H-1 RESURFACING
Vic. of Punchbowl Off Ramp to Kapiolani IC
F.A.I Project No. IM-H1-1(234)

Scale: 1"=20' Date: JUNE 1, 1999

SHEET NO. DR29 OF 54 SHEETS

FN: 98-35\SHT6.DWG
051199

ORIGINAL PLAN	SURVEY PLOTTED BY	DATE
	DRAWN BY	
	TRACED BY	
NOTEBOOK	DESIGNED BY	
	QUANTITIES BY	
No.	CHECKED BY	

FED. ROAD DIST. NO.	STATE	FED. AID PROJ. NO.	FISCAL YEAR	SHEET NO.	TOTAL SHEETS
HAWAII	HAW.	IM-H1-1(234)	2000	92	557

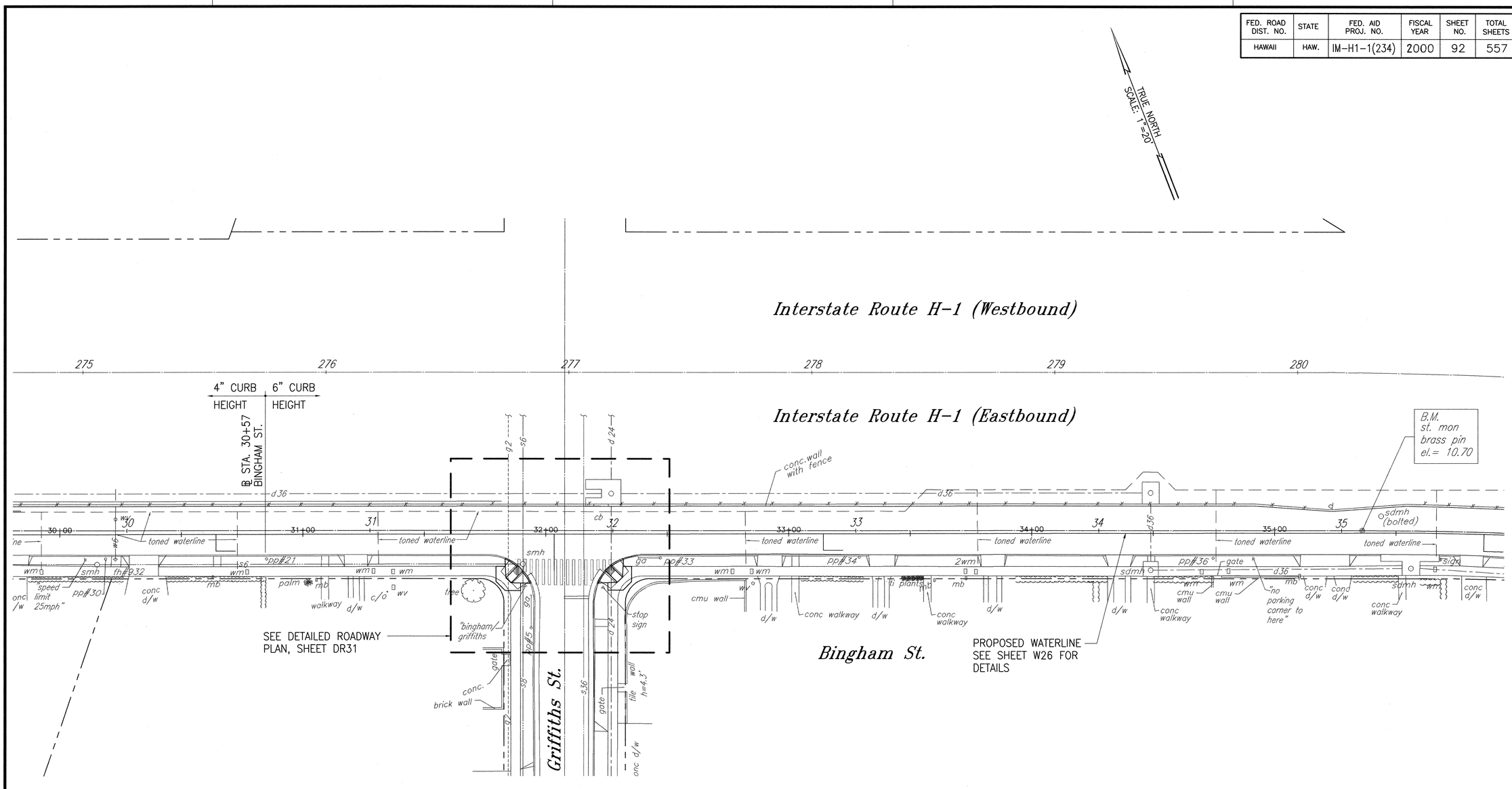

DETAILED ROADWAY PLAN

SCALE: 1"=20'

FN: 98-35\SHT7.DWG
08/1/99

SURVEY PLOTTED BY	DATE
DRAWN BY	"
TRACED BY	"
DESIGNED BY	"
QUANTITIES BY	"
CHECKED BY	"

ORIGINAL PLAN
NOTEBOOK No.

BENJAMIN S. TANAKA
LICENSED PROFESSIONAL ENGINEER No. 2055-C
HAWAII, U.S.A.

THIS WORK WAS PREPARED BY ME OR UNDER MY SUPERVISION

STATE OF HAWAII
DEPARTMENT OF TRANSPORTATION
HIGHWAYS DIVISION

DETAILED ROADWAY PLAN

INTERSTATE ROUTE H-1 RESURFACING
Vic. of Punchbowl Off Ramp to Kapiolani IC
F.A.I Project No. IM-H1-1(234)

Scale: 1"=20' Date: JUNE 1, 1999

SHEET NO. DR30 OF 54 SHEETS

FED. ROAD DIST. NO.	STATE	FED. AID PROJ. NO.	FISCAL YEAR	SHEET NO.	TOTAL SHEETS
HAWAII	HAW.	IM-H1-1(234)	2000	93	557

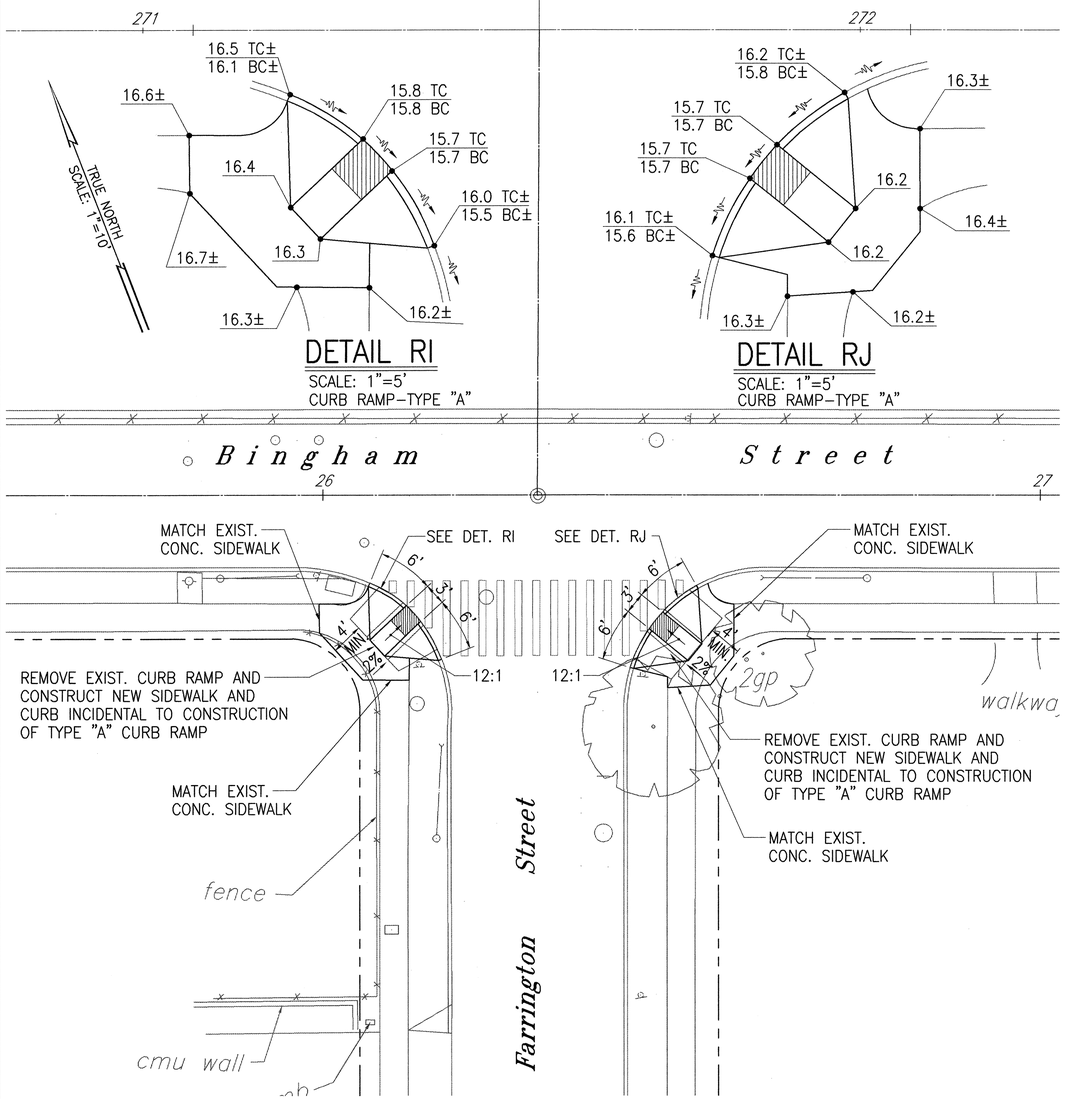

DETAILED ROADWAY PLAN
BINGHAM ST./FARRINGTON ST.
SCALE: 1"=10'

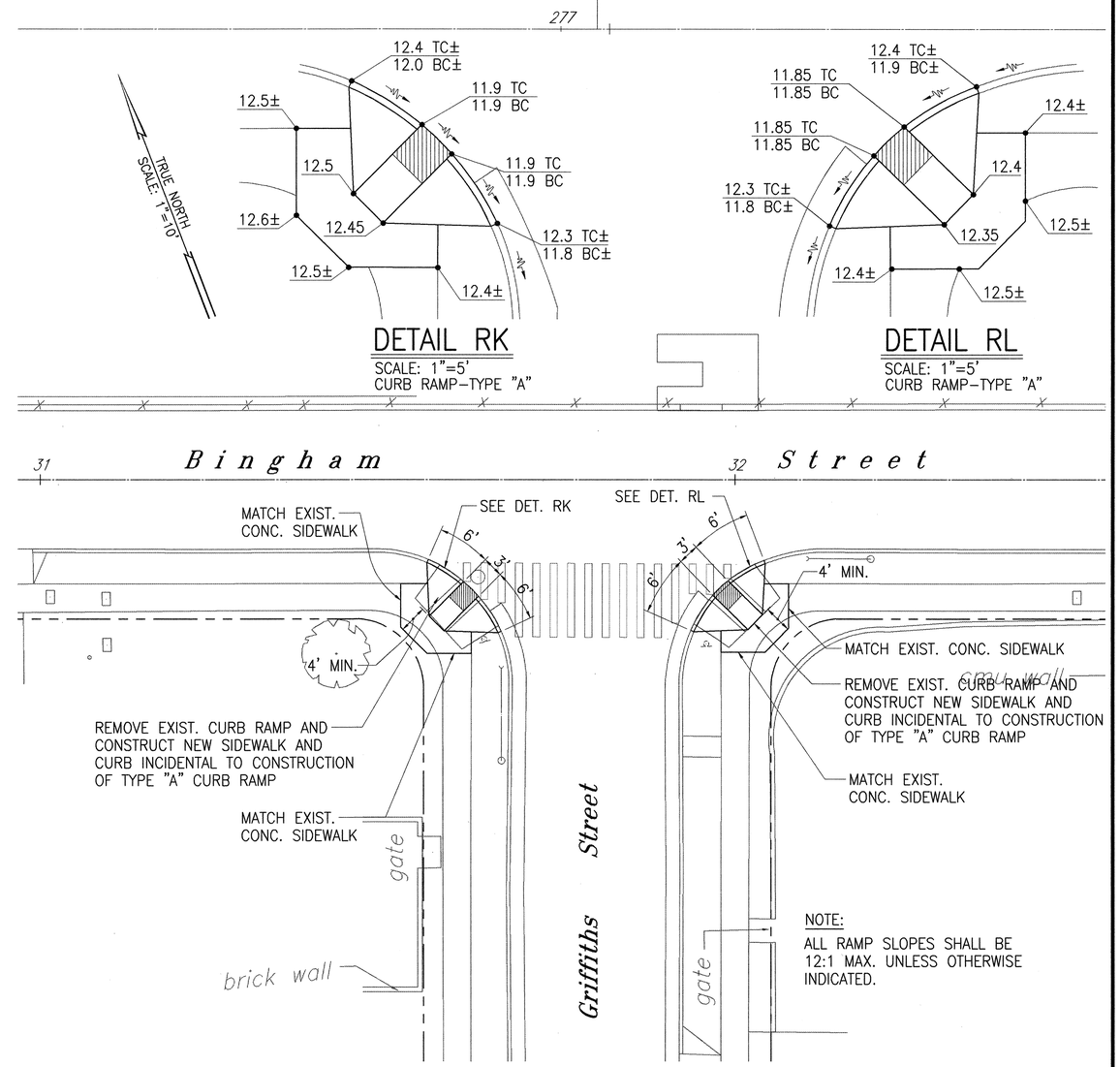

NOTE:
ALL RAMP SLOPES SHALL BE 12:1 MAX. UNLESS OTHERWISE INDICATED.

DETAILED ROADWAY PLAN
BINGHAM ST./GRIFFITHS ST.
SCALE: 1"=10'

BENJAMIN S. TANAKA
LICENSED PROFESSIONAL ENGINEER
No. 2055-C
HAWAII, U.S.A.

THIS WORK WAS PREPARED BY ME OR UNDER MY SUPERVISION

Benjamin S. Tanaka

STATE OF HAWAII
DEPARTMENT OF TRANSPORTATION
HIGHWAYS DIVISION

DETAILED ROADWAY PLAN

INTERSTATE ROUTE H-1 RESURFACING
Vic. of Punchbowl Off Ramp to Kapiolani IC
F.A.I Project No. IM-H1-1(234)
Scale: 1"=10' Date: JUNE 1, 1999

SHEET NO. DR31 OF 54 SHEETS

F.N. 98-51\VNTDET4.DWG
DD:1999

ORIGINAL PLAN	SURVEY PLOTTED BY	DATE
	DRAWN BY	
	TRACED BY	
NOTEBOOK	DESIGNED BY	
	QUANTITIES BY	
No.	CHECKED BY	

FED. ROAD DIST. NO.	STATE	FED. AID PROJ. NO.	FISCAL YEAR	SHEET NO.	TOTAL SHEETS
HAWAII	HAW.	IM-H1-1(234)	2000	94	557

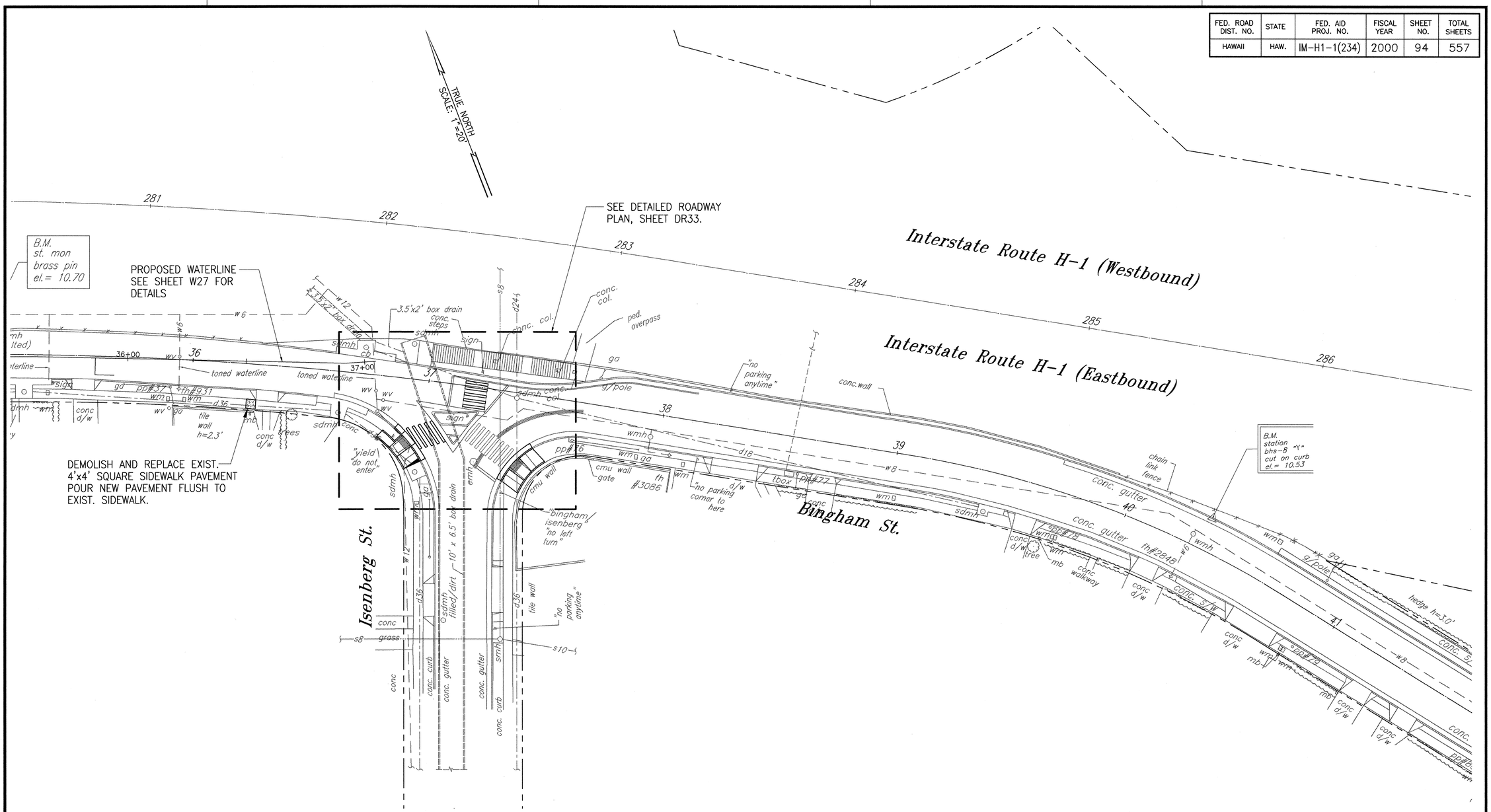

DETAILED ROADWAY PLAN

SCALE: 1"=20'

BENJAMIN S. TANAKA
LICENSED PROFESSIONAL ENGINEER
No. 2055-C
HAWAII, U.S.A.

THIS WORK WAS PREPARED BY ME OR UNDER MY SUPERVISION

Benjamin S. Tanaka

STATE OF HAWAII
DEPARTMENT OF TRANSPORTATION
HIGHWAYS DIVISION

DETAILED ROADWAY PLAN

INTERSTATE ROUTE H-1 RESURFACING
Vic. of Punchbowl Off Ramp to Kapiolani IC
F.A.I Project No. IM-H1-1(234)

Scale: 1"=20' Date: JUNE 1, 1999

SHEET NO. DR32 OF 54 SHEETS

ORIGINAL PLAN	SURVEY PLOTTED BY	DATE
	DRAWN BY	
	TRACED BY	
NOTEBOOK	ISSUED BY	
No.	QUANTITIES BY	
	CHECKED BY	

FN: 98-35\SHT8.DWG
05/1999

FED. ROAD DIST. NO.	STATE	FED. AID PROJ. NO.	FISCAL YEAR	SHEET NO.	TOTAL SHEETS
HAWAII	HAW.	IM-H1-1(234)	2000	95	557

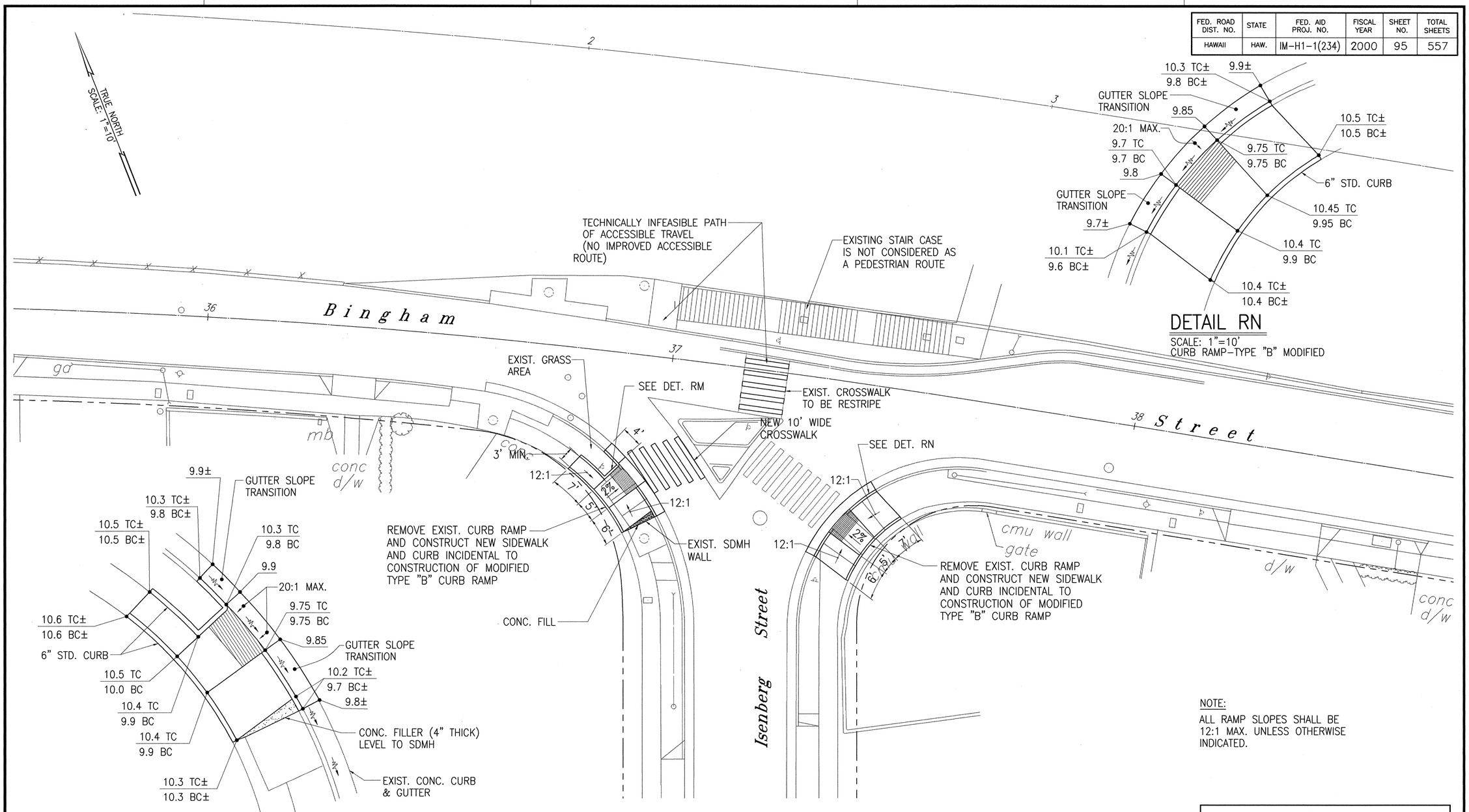

DETAIL RN

SCALE: 1"=10'
CURB RAMP-TYPE "B" MODIFIED

DETAIL RM

SCALE: 1"=10'
CURB RAMP-TYPE "B" MODIFIED

DETAILED ROADWAY PLAN
BINGHAM ST./ISENBERG ST.

SCALE: 1"=10'

NOTE:
ALL RAMP SLOPES SHALL BE 12:1 MAX. UNLESS OTHERWISE INDICATED.

FN: 98-35\INTDET5.DWG
052499

ORIGINAL PLAN	SURVEY PLOTTED BY	DATE
	DRAWN BY	
	TRACED BY	
NOTEBOOK	DESIGNED BY	
	QUANTITIES BY	
No.	CHECKED BY	

BENJAMIN S. TANAKA
LICENSED PROFESSIONAL ENGINEER
No. 2055-C
HAWAII, U.S.A.

THIS WORK WAS PREPARED BY ME OR UNDER MY SUPERVISION

Benjamin S. Tanaka

STATE OF HAWAII
DEPARTMENT OF TRANSPORTATION
HIGHWAYS DIVISION

DETAILED ROADWAY PLAN

INTERSTATE ROUTE H-1 RESURFACING
Vic. of Punchbowl Off Ramp to Kapiolani IC
F.A.I Project No. IM-H1-1(234)
Scale: 1"=10' Date: JUNE 1, 1999

SHEET NO. DR33 OF 54 SHEETS

FED. ROAD DIST. NO.	STATE	FED. AID PROJ. NO.	FISCAL YEAR	SHEET NO.	TOTAL SHEETS
HAWAII	HAW.	IM-H1-1(234)	2000	96	557

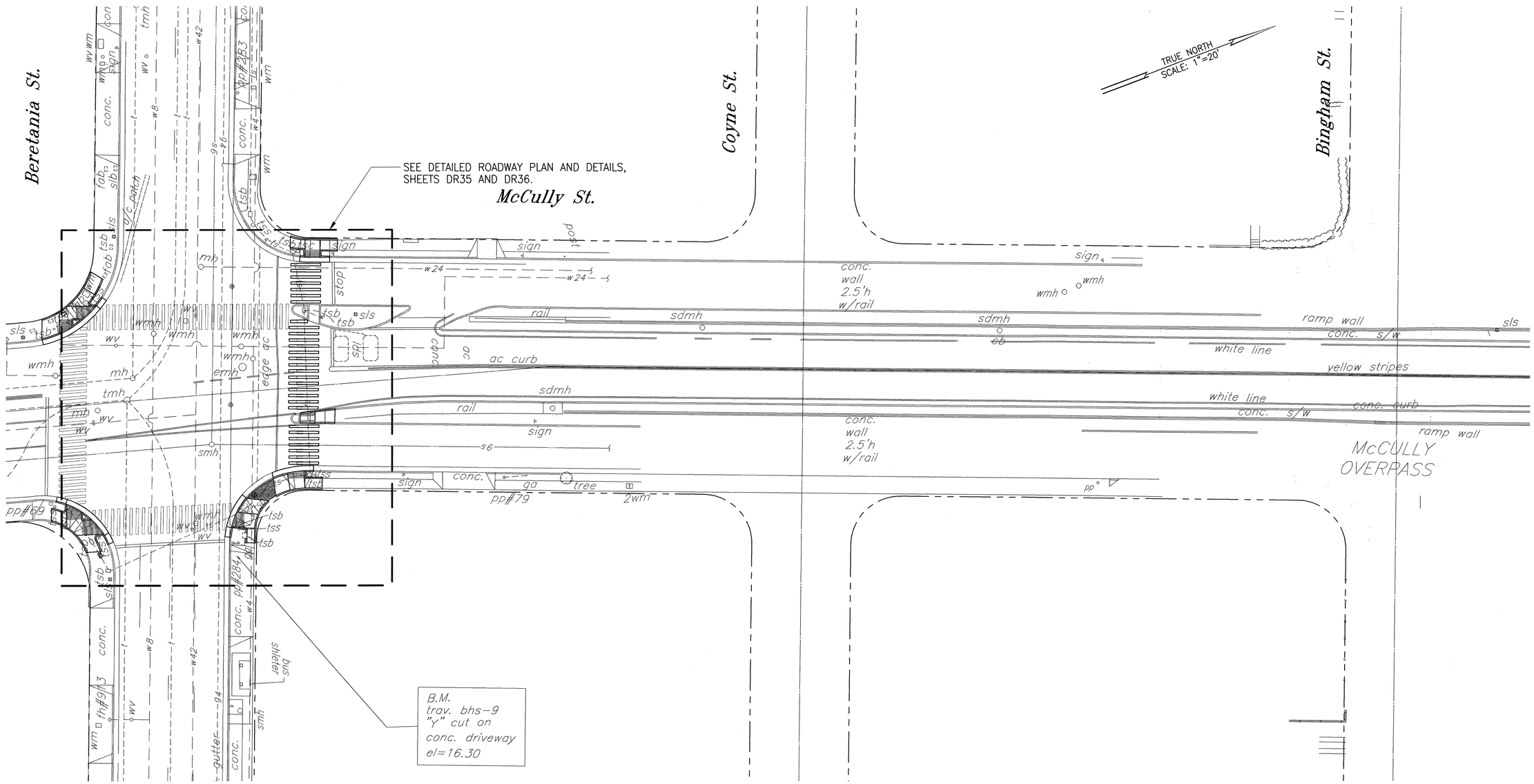

DETAILED ROADWAY PLAN

SCALE: 1"=20'

FN: 95-35\SHT11.DWG
051199

ORIGINAL PLAN	SURVEY PLOTTED BY	DATE
	DRAWN BY	
NOTEBOOK	TRACED BY	
	DESIGNED BY	
	QUANTITIES BY	
No.	CHECKED BY	

BENJAMIN S. TANAKA
LICENSED PROFESSIONAL ENGINEER
No. 2055-C
HAWAII, U.S.A.

THIS WORK WAS PREPARED BY ME OR UNDER MY SUPERVISION

STATE OF HAWAII
DEPARTMENT OF TRANSPORTATION
HIGHWAYS DIVISION

DETAILED ROADWAY PLAN

INTERSTATE ROUTE H-1 RESURFACING
Vic. of Punchbowl Off Ramp to Kapiolani IC
F.A.I Project No. IM-H1-1(234)

Scale: 1"=20' Date: JUNE 1, 1999

SHEET NO. DR34 OF 54 SHEETS

FED. ROAD DIST. NO.	STATE	FED. AID PROJ. NO.	FISCAL YEAR	SHEET NO.	TOTAL SHEETS
HAWAII	HAW.	IM-H1-1(234)	2000	97	557

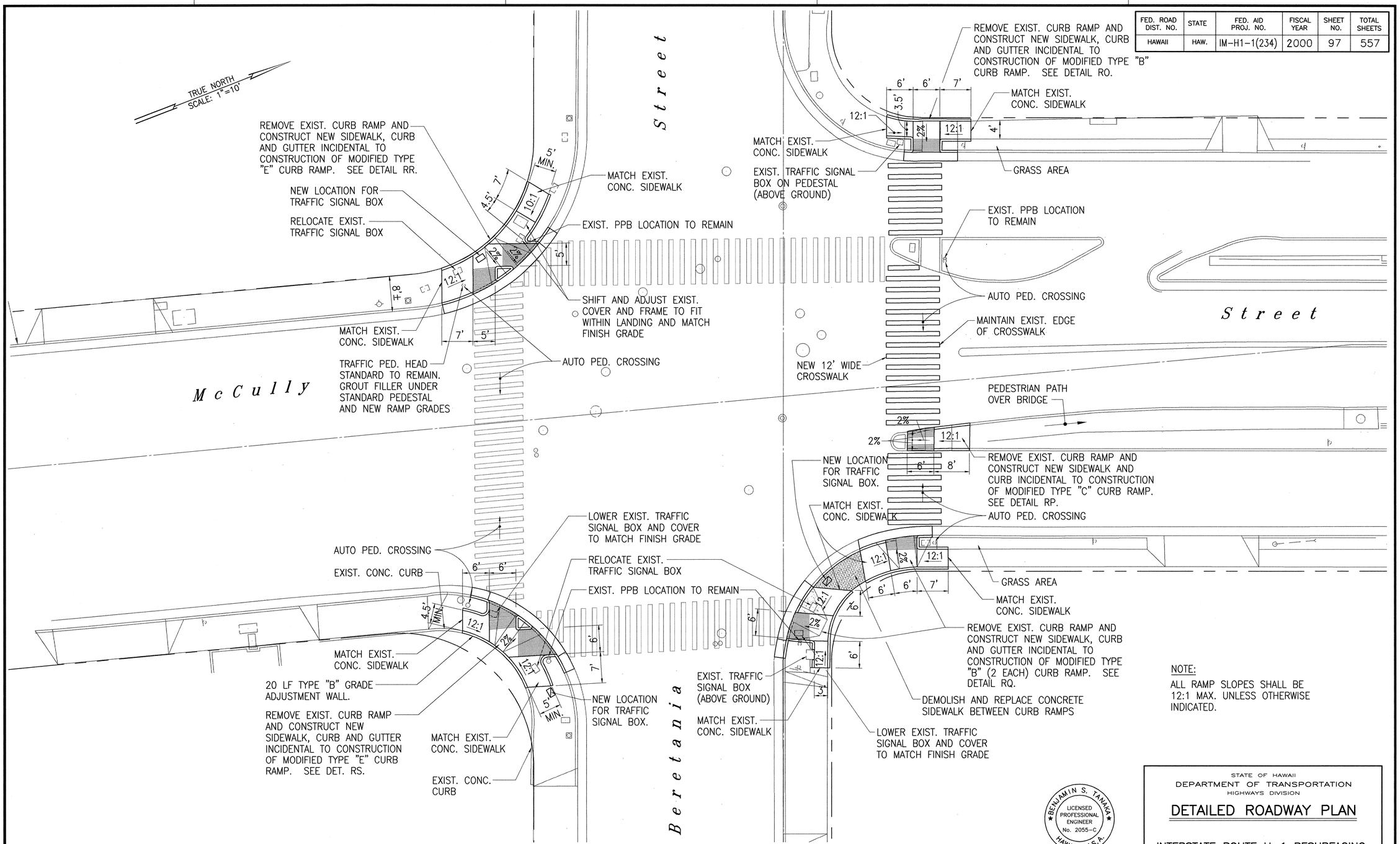

NOTE:
ALL RAMP SLOPES SHALL BE 12:1 MAX. UNLESS OTHERWISE INDICATED.

DETAILED ROADWAY PLAN
BERETANIA ST./McCULLY ST.
SCALE: 1"=10'

BENJAMIN S. TANAKA
LICENSED PROFESSIONAL ENGINEER
No. 2055-C
HAWAII, U.S.A.

THIS WORK WAS PREPARED BY ME OR UNDER MY SUPERVISION

STATE OF HAWAII
DEPARTMENT OF TRANSPORTATION
HIGHWAYS DIVISION

DETAILED ROADWAY PLAN

INTERSTATE ROUTE H-1 RESURFACING
Vic. of Punchbowl Off Ramp to Kapiolani IC
F.A.I Project No. IM-H1-1(234)
Scale: 1"=5' Date: JUNE 1, 1999

SHEET NO. DR35 OF 54 SHEETS

ORIGINAL PLAN | NOTEBOOK No. | SURVEY PLOTTED BY | DRAWN BY | TRACED BY | DESIGNED BY | QUANTITIES BY | CHECKED BY | DATE

FN: 99-35\VHTDET9.DWG
051999

FED. ROAD DIST. NO.	STATE	FED. AID PROJ. NO.	FISCAL YEAR	SHEET NO.	TOTAL SHEETS
HAWAII	HAW.	IM-H1-1(234)	2000	98	557

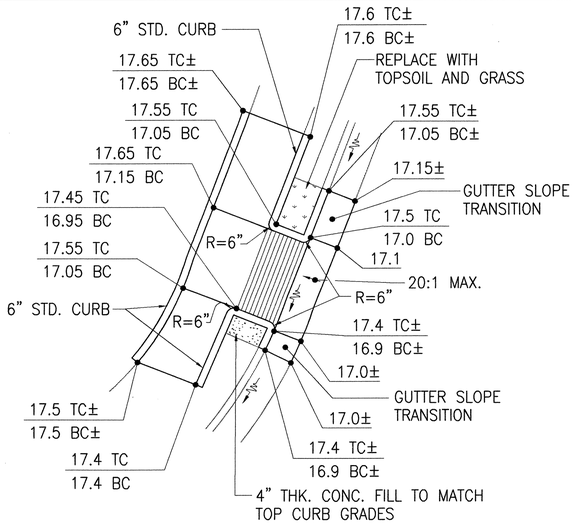

DETAIL RO

SCALE: 1"=5'
CURB RAMP–TYPE "B" MODIFIED

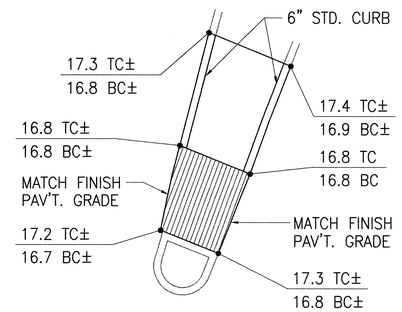

DETAIL RP

SCALE: 1"=5'
CURB RAMP–MODIFIED TYPE "C"

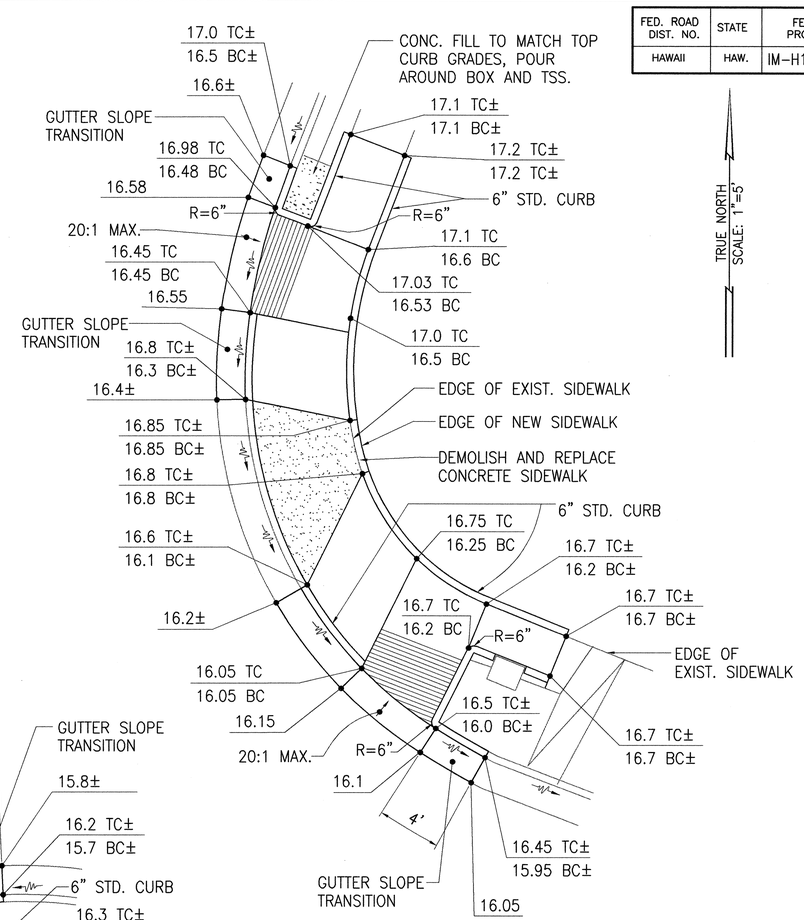

DETAIL RQ

SCALE: 1"=5'
CURB RAMP–TYPE "B" MODIFIED

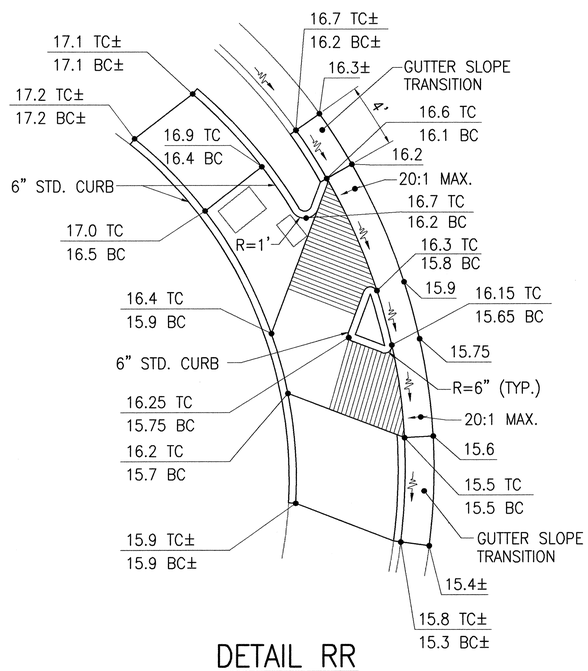

DETAIL RR

SCALE: 1"=5'
CURB RAMP–TYPE "E" MODIFIED

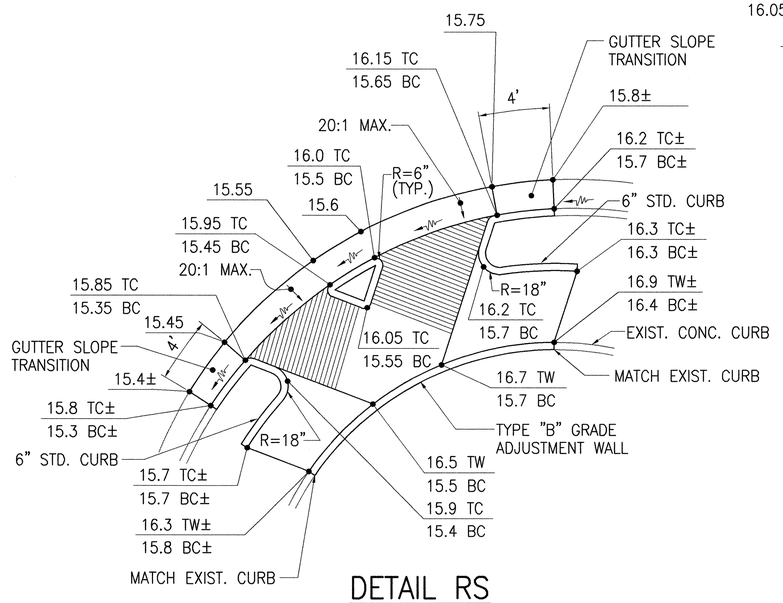

DETAIL RS

SCALE: 1"=5'
CURB RAMP–TYPE "E" MODIFIED

DETAILED ROADWAY PLAN

INTERSECTION PLAN DETAILS – BERETANIA ST./McCULLY ST.

SCALE: 1"=5'

BENJAMIN S. TANAKA
LICENSED PROFESSIONAL ENGINEER
No. 2055-C
HAWAII, U.S.A.

THIS WORK WAS PREPARED BY ME OR UNDER MY SUPERVISION

STATE OF HAWAII
DEPARTMENT OF TRANSPORTATION
HIGHWAYS DIVISION

DETAILED ROADWAY PLAN

INTERSTATE ROUTE H-1 RESURFACING
Vic. of Punchbowl Off Ramp to Kapiolani IC
F.A.I Project No. IM-H1-1(234)
Scale: 1"=5' Date: JUNE 1, 1999

SHEET NO. DR36 OF 54 SHEETS

ORIGINAL PLAN | NOTEBOOK | No. | SURVEY PLOTTED BY | DRAWN BY | TRACED BY | DESIGNED BY | QUANTITIES BY | CHECKED BY | DATE

FN: 85-35\CRBRAMPDETZ.DWG
020600

FED. ROAD DIST. NO.	STATE	FED. AID PROJ. NO.	FISCAL YEAR	SHEET NO.	TOTAL SHEETS
HAWAII	HAW.	IM-H1-1(234)	2000	99	557

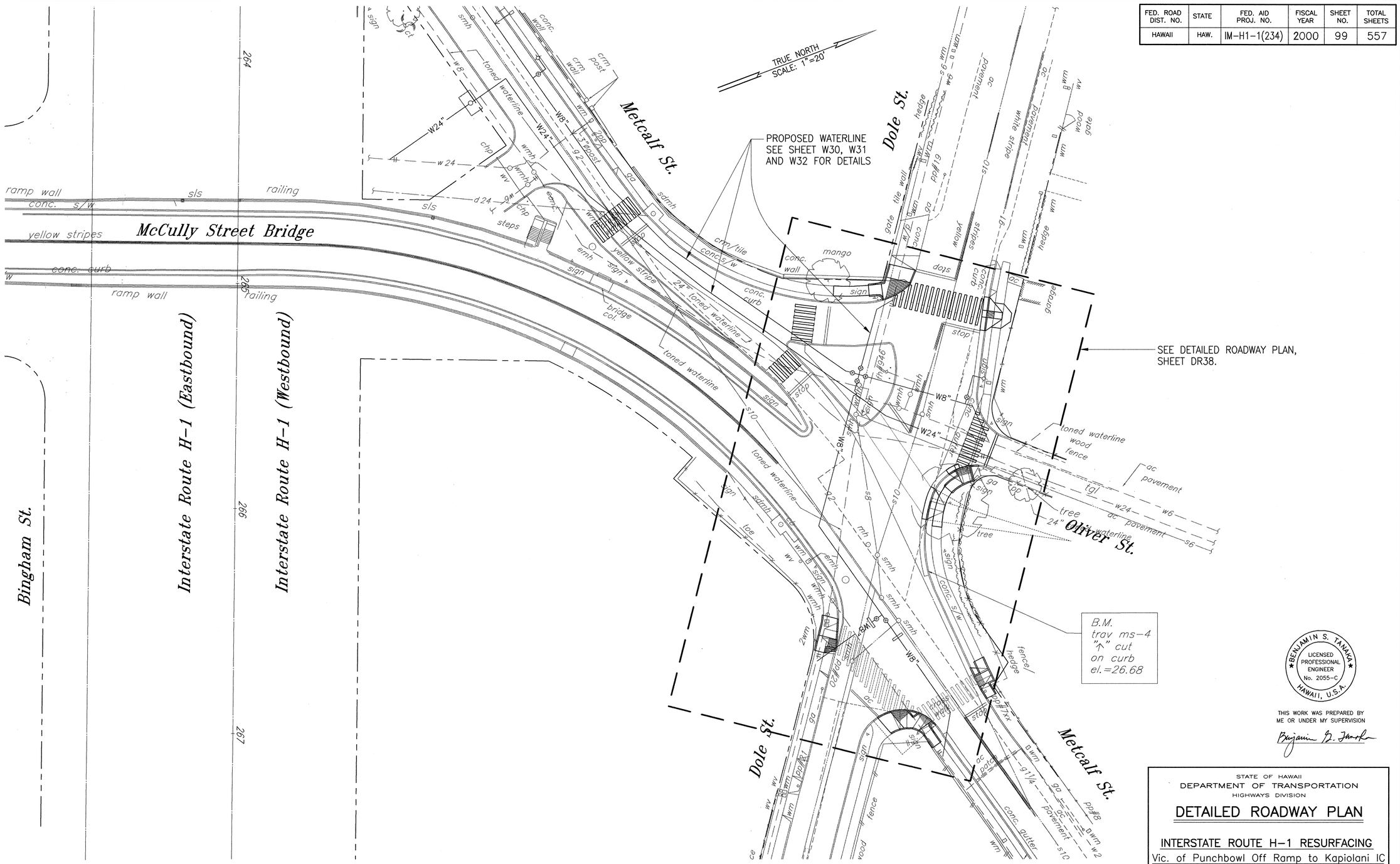

DETAILED ROADWAY PLAN

SCALE: 1"=20'

FN: 98-35\SHT12.DWG
020099

ORIGINAL PLAN	SURVEY PLOTTED BY	DATE
	DRAWN BY	"
	TRACED BY	"
NOTEBOOK	DESIGNED BY	"
	QUANTITIES BY	"
No.	CHECKED BY	"

BENJAMIN S. TANAKA
LICENSED PROFESSIONAL ENGINEER
No. 2055-C
HAWAII, U.S.A.

THIS WORK WAS PREPARED BY
ME OR UNDER MY SUPERVISION

STATE OF HAWAII
DEPARTMENT OF TRANSPORTATION
HIGHWAYS DIVISION

DETAILED ROADWAY PLAN

INTERSTATE ROUTE H-1 RESURFACING
Vic. of Punchbowl Off Ramp to Kapiolani IC
F.A.I Project No. IM-H1-1(234)

Scale: 1"=20' Date: JUNE 1, 1999

SHEET NO. DR37 OF 54 SHEETS

FED. ROAD DIST. NO.	STATE	FED. AID PROJ. NO.	FISCAL YEAR	SHEET NO.	TOTAL SHEETS
HAWAII	HAW.	IM-H1-1(234)	2000	100	557

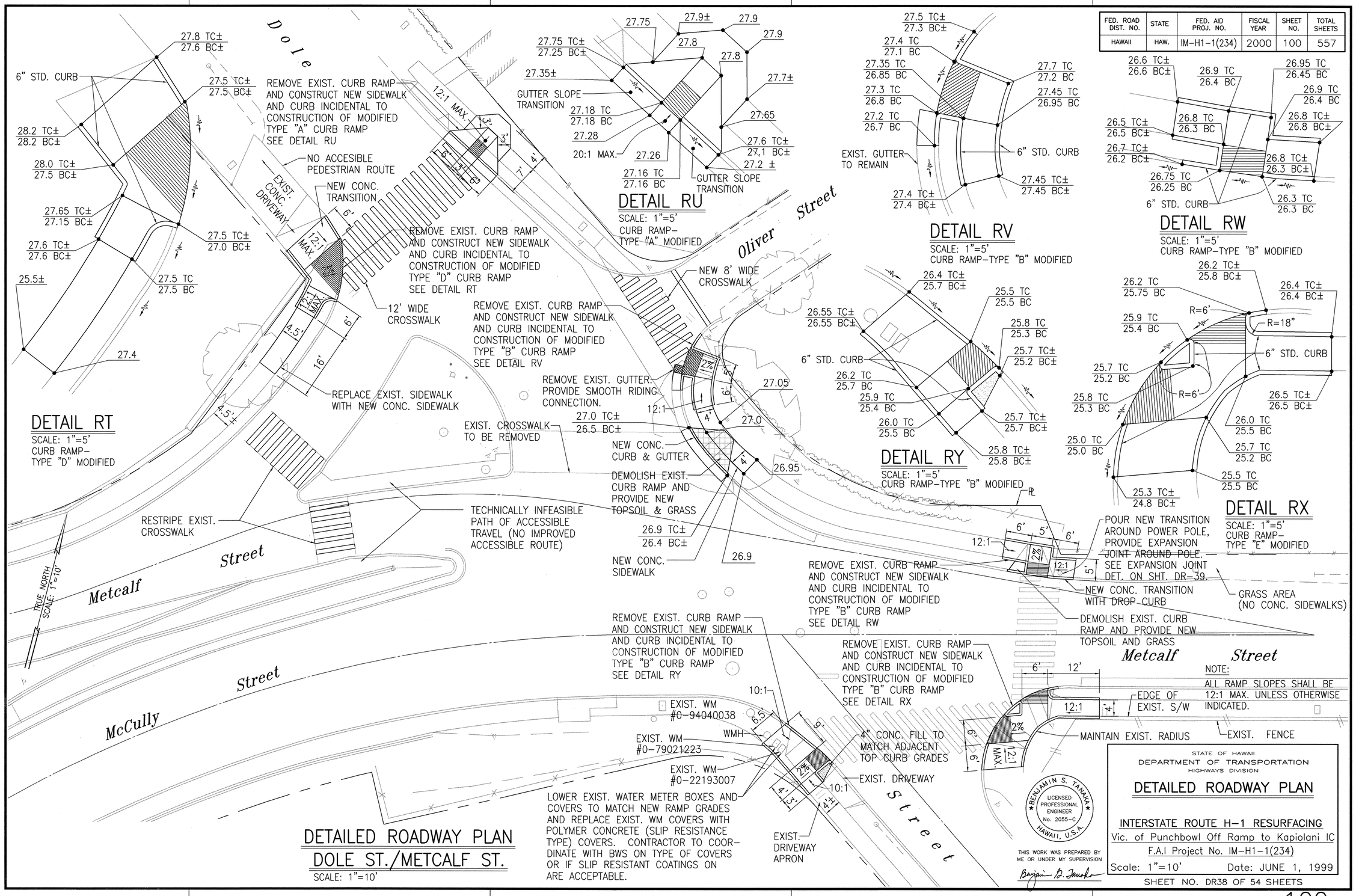

FED. ROAD DIST. NO.	STATE	FED. AID PROJ. NO.	FISCAL YEAR	SHEET NO.	TOTAL SHEETS
HAWAII	HAW.	IM-H1-1(234)	2000	101	557

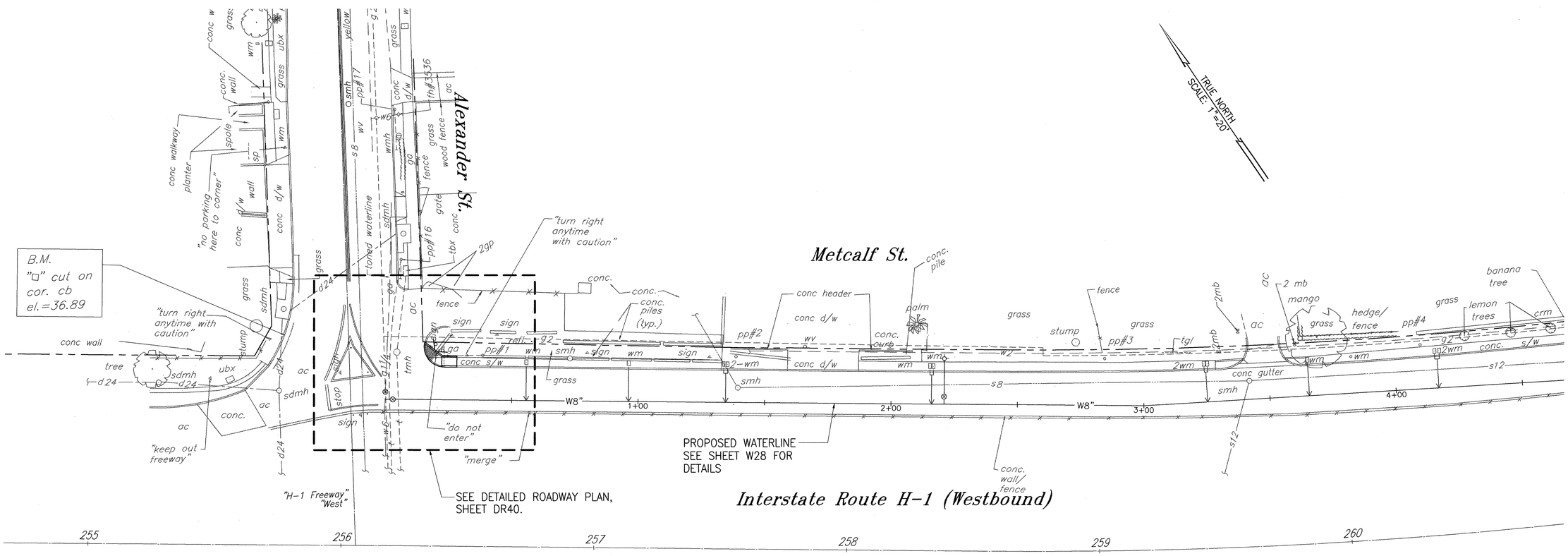

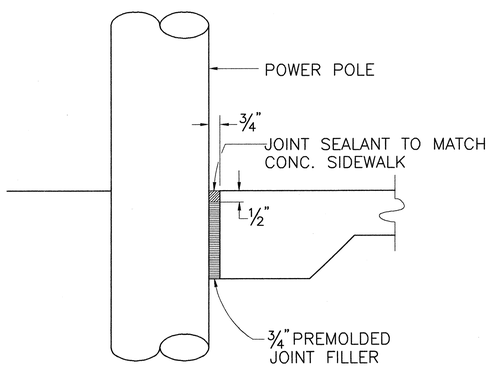

EXPANSION JOINT DETAIL

NOT TO SCALE

DETAILED ROADWAY PLAN

SCALE: 1"=20'

FN: 98-35\SH19.DWG
051999

ORIGINAL PLAN	SURVEY PLOTTED BY	DATE
	DRAWN BY	
NOTEBOOK	TRACED BY	
	DESIGNED BY	
No.	QUANTITIES BY	
	CHECKED BY	

BENJAMIN S. TANAKA
LICENSED PROFESSIONAL ENGINEER
No. 2055-C
HAWAII, U.S.A.

THIS WORK WAS PREPARED BY ME OR UNDER MY SUPERVISION

Benjamin S. Tanaka

STATE OF HAWAII
DEPARTMENT OF TRANSPORTATION
HIGHWAYS DIVISION

DETAILED ROADWAY PLAN

INTERSTATE ROUTE H-1 RESURFACING
Vic. of Punchbowl Off Ramp to Kapiolani IC
F.A.I Project No. IM-H1-1(234)

Scale: 1"=20' Date: JUNE 1, 1999

SHEET NO. DR39 OF 54 SHEETS

FED. ROAD DIST. NO.	STATE	FED. AID PROJ. NO.	FISCAL YEAR	SHEET NO.	TOTAL SHEETS
HAWAII	HAW.	IM-H1-1(234)	2000	102	557

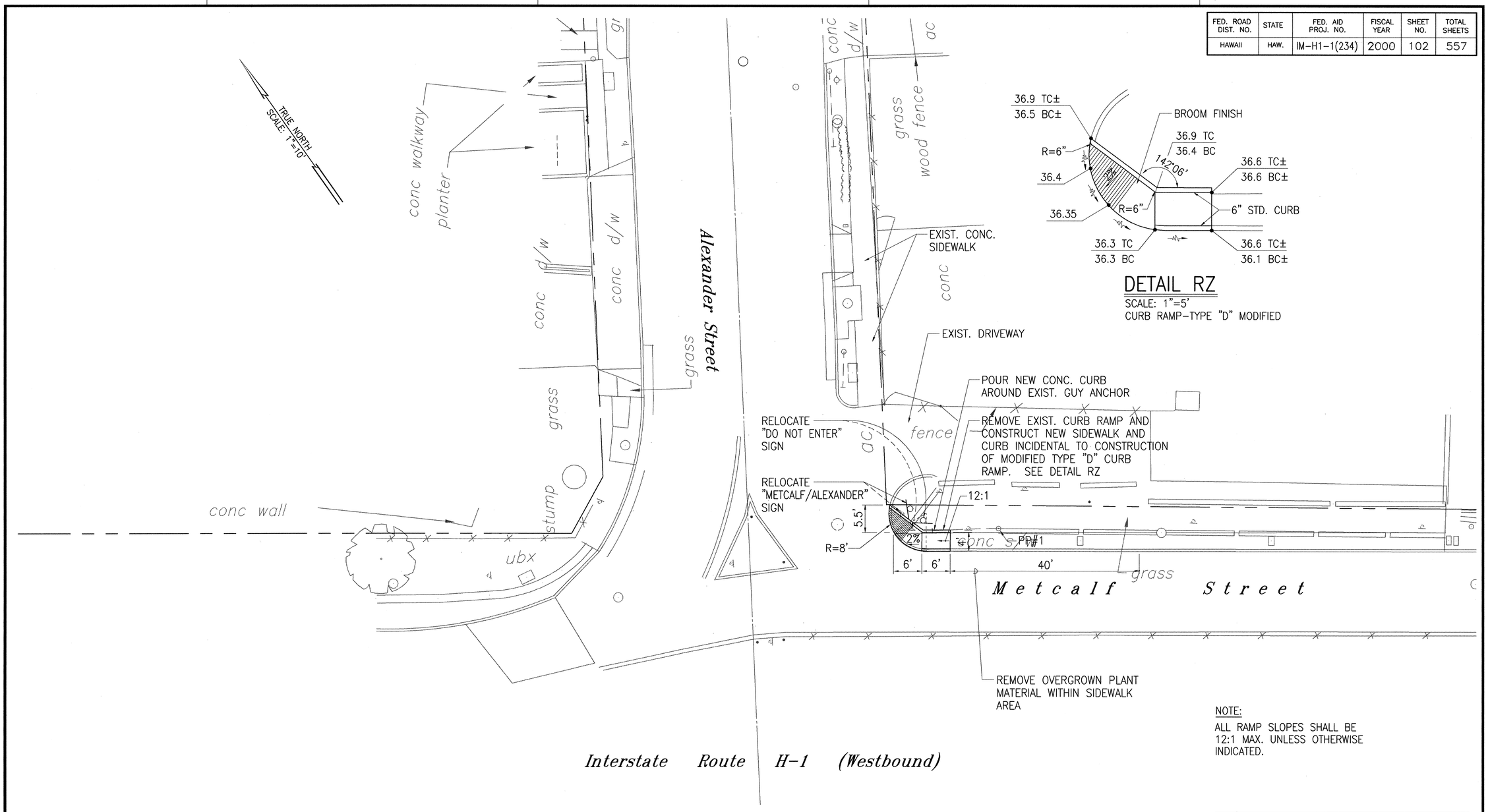

DETAIL RZ

SCALE: 1"=5'
CURB RAMP-TYPE "D" MODIFIED

NOTE:
ALL RAMP SLOPES SHALL BE 12:1 MAX. UNLESS OTHERWISE INDICATED.

DETAILED ROADWAY PLAN
METCALF ST./ALEXANDER ST.

SCALE: 1"=10'

BENJAMIN S. TANAKA
LICENSED PROFESSIONAL ENGINEER
No. 2055-C
HAWAII, U.S.A.

THIS WORK WAS PREPARED BY ME OR UNDER MY SUPERVISION

Benjamin S. Tanaka

STATE OF HAWAII
DEPARTMENT OF TRANSPORTATION
HIGHWAYS DIVISION

DETAILED ROADWAY PLAN

INTERSTATE ROUTE H-1 RESURFACING
Vic. of Punchbowl Off Ramp to Kapiolani IC
F.A.I Project No. IM-H1-1(234)
Scale: 1"=10' Date: JUNE 1, 1999

SHEET NO. DR40 OF 54 SHEETS

ORIGINAL PLAN	SURVEY PLOTTED BY	DATE
	DRAWN BY	
	TRACED BY	
NOTEBOOK	DESIGNED BY	
	QUANTITIES BY	
No.	CHECKED BY	

FN: 98-35\NTDET6.DWG
081199

FED. ROAD DIST. NO.	STATE	FED. AID PROJ. NO.	FISCAL YEAR	SHEET NO.	TOTAL SHEETS
HAWAII	HAW.	IM-H1-1(234)	2000	103	557

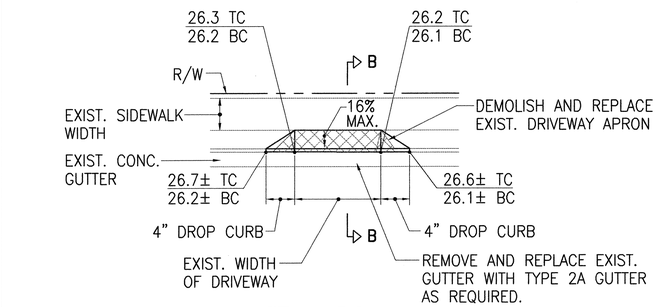

DETAIL DG

SCALE: 1"=10'

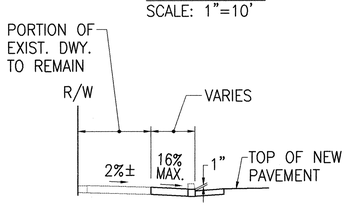

SECTION B-B

SCALE: 1"=5'

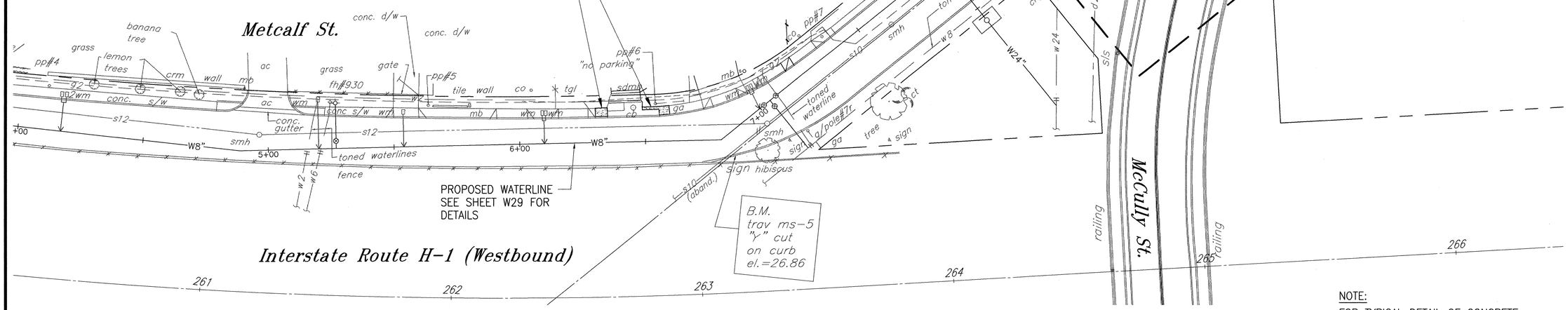

NOTE:
FOR TYPICAL DETAIL OF CONCRETE DRIVEWAY, SEE SHEET CR4.

DETAILED ROADWAY PLAN

SCALE: 1"=20'

FN: 98-35\SHT10.DWG
052099

ORIGINAL PLAN	SURVEY PLOTTED BY	DATE
	DRAWN BY	
NOTEBOOK	TRACED BY	
	DESIGNED BY	
No.	QUANTITIES BY	
	CHECKED BY	

BENJAMIN S. TANAKA
LICENSED PROFESSIONAL ENGINEER
No. 2055-C
HAWAII, U.S.A.

THIS WORK WAS PREPARED BY ME OR UNDER MY SUPERVISION

Benjamin S. Tanaka

STATE OF HAWAII
DEPARTMENT OF TRANSPORTATION
HIGHWAYS DIVISION

DETAILED ROADWAY PLAN

INTERSTATE ROUTE H-1 RESURFACING
Vic. of Punchbowl Off Ramp to Kapiolani IC
F.A.I Project No. IM-H1-1(234)

Scale: 1"=20' Date: JUNE 1, 1999

SHEET NO. DR41 OF 54 SHEETS

FED. ROAD DIST. NO.	STATE	FED. AID PROJ. NO.	FISCAL YEAR	SHEET NO.	TOTAL SHEETS
HAWAII	HAW.	IM-H1-1(234)	2000	104	557

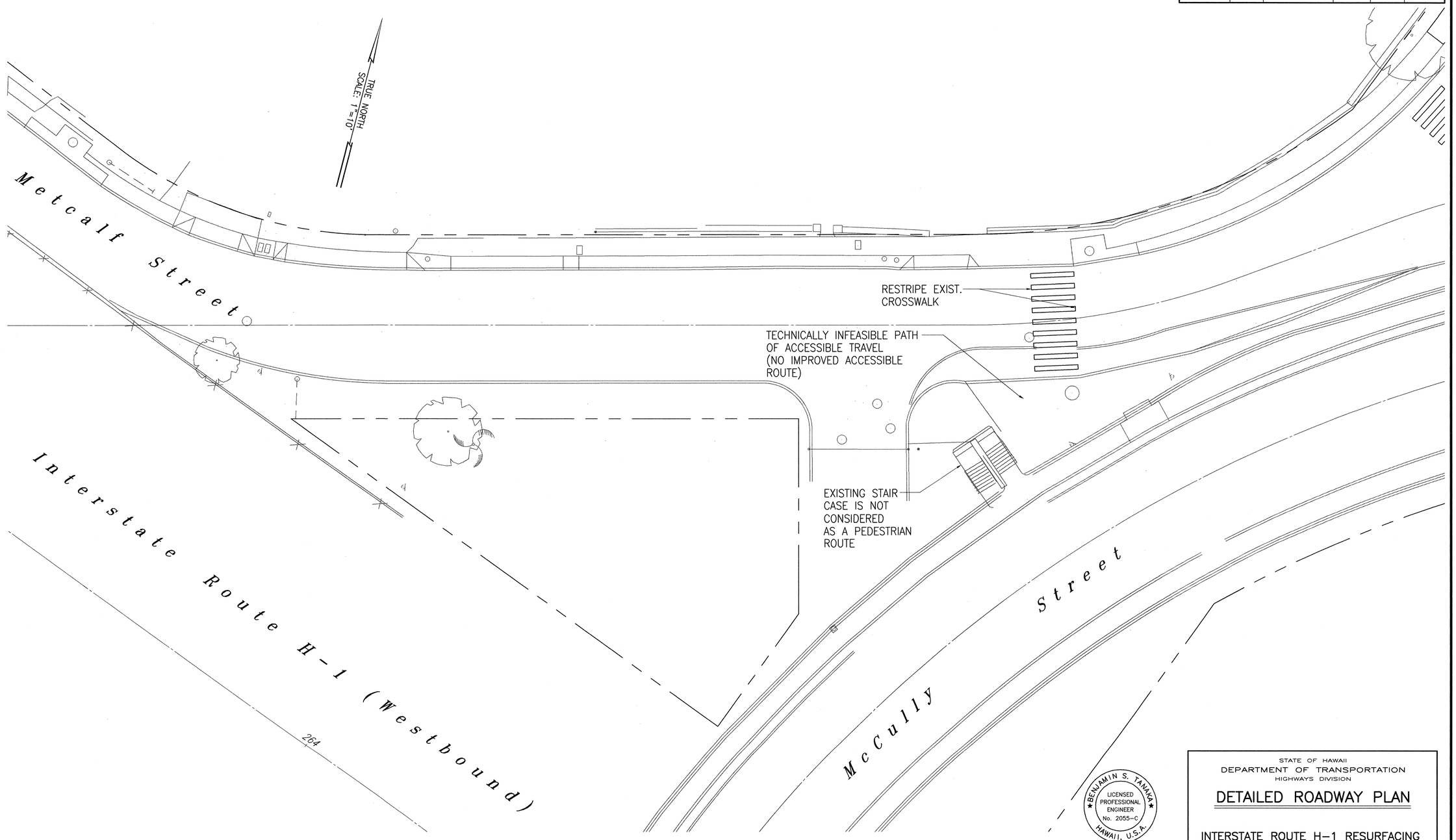

DETAILED ROADWAY PLAN
METCALF ST./McCULLY ST.
SCALE: 1"=10'

FN: 98-35\NTDET7.DWG
05/1/99

ORIGINAL PLAN	SURVEY PLOTTED BY	DATE
	DRAWN BY	
NOTEBOOK	TRACED BY	
	DESIGNED BY	
No.	QUANTITIES BY	
	CHECKED BY	

BENJAMIN S. TANAKA
LICENSED PROFESSIONAL ENGINEER
No. 2055-C
HAWAII, U.S.A.

THIS WORK WAS PREPARED BY ME OR UNDER MY SUPERVISION

STATE OF HAWAII
DEPARTMENT OF TRANSPORTATION
HIGHWAYS DIVISION

DETAILED ROADWAY PLAN

INTERSTATE ROUTE H-1 RESURFACING
Vic. of Punchbowl Off Ramp to Kapiolani IC
F.A.I Project No. IM-H1-1(234)

Scale: 1"=10' Date: JUNE 1, 1999

SHEET NO. DR42 OF 54 SHEETS

FED. ROAD DIST. NO.	STATE	FED. AID PROJ. NO.	FISCAL YEAR	SHEET NO.	TOTAL SHEETS
HAWAII	HAW.	IM-H1-1(234)	2000	105	557

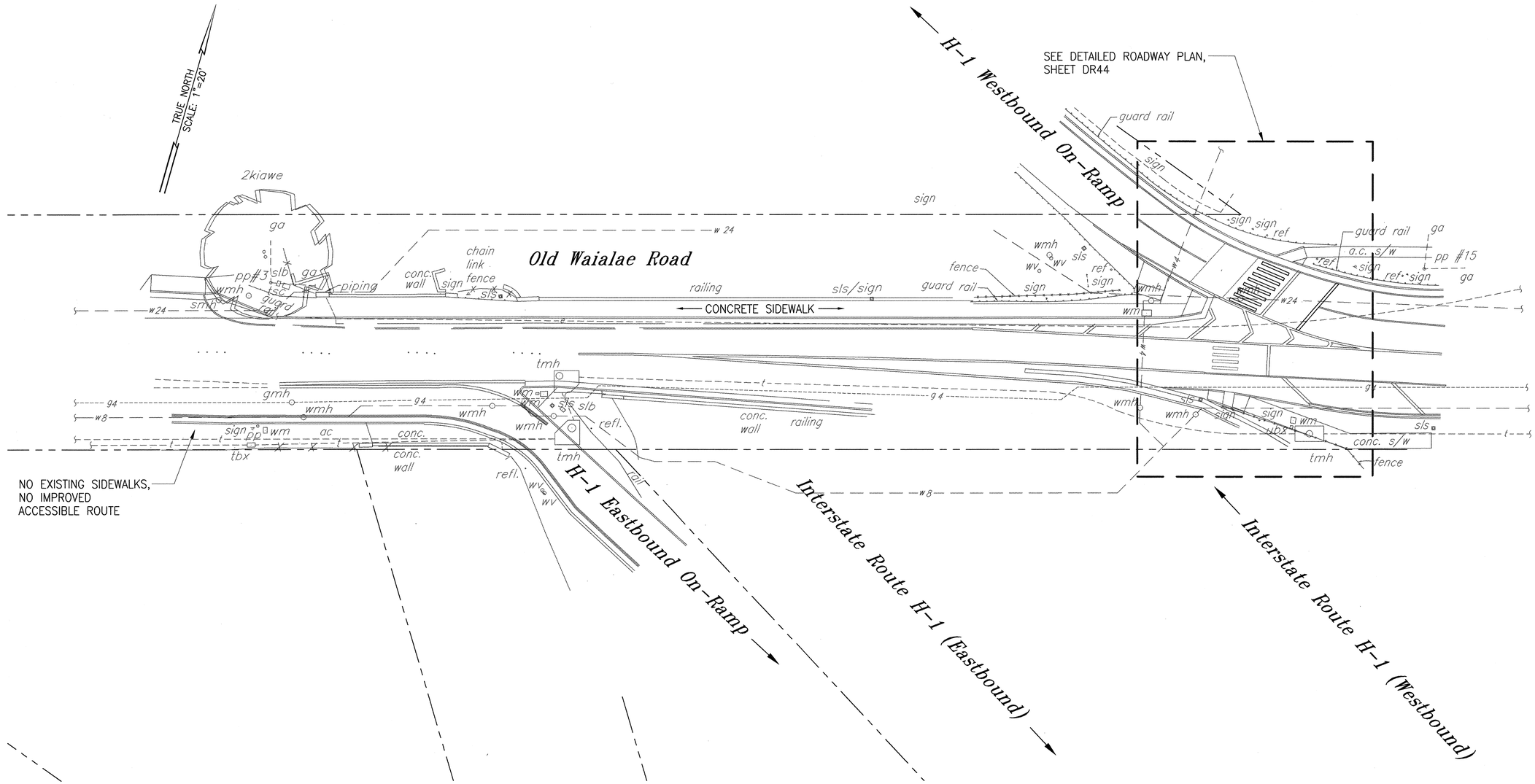

DETAILED ROADWAY PLAN

SCALE: 1"=20'

BENJAMIN S. TANAKA
LICENSED PROFESSIONAL ENGINEER
No. 2055-C
HAWAII, U.S.A.

THIS WORK WAS PREPARED BY ME OR UNDER MY SUPERVISION

STATE OF HAWAII
DEPARTMENT OF TRANSPORTATION
HIGHWAYS DIVISION

DETAILED ROADWAY PLAN

INTERSTATE ROUTE H-1 RESURFACING
Vic. of Punchbowl Off Ramp to Kapiolani IC
F.A.I Project No. IM-H1-1(234)

Scale: 1"=20' Date: JUNE 1, 1999

SHEET NO. DR43 OF 54 SHEETS

ORIGINAL PLAN	SURVEY PLOTTED BY	DATE
	DRAWN BY	"
	TRACED BY	"
NOTEBOOK	DESIGNED BY	"
	QUANTITIES BY	"
No.	CHECKED BY	"

FN: 99-35\SHT13.DWG
05/1/99

FED. ROAD DIST. NO.	STATE	FED. AID PROJ. NO.	FISCAL YEAR	SHEET NO.	TOTAL SHEETS
HAWAII	HAW.	IM-H1-1(234)	2000	106	557

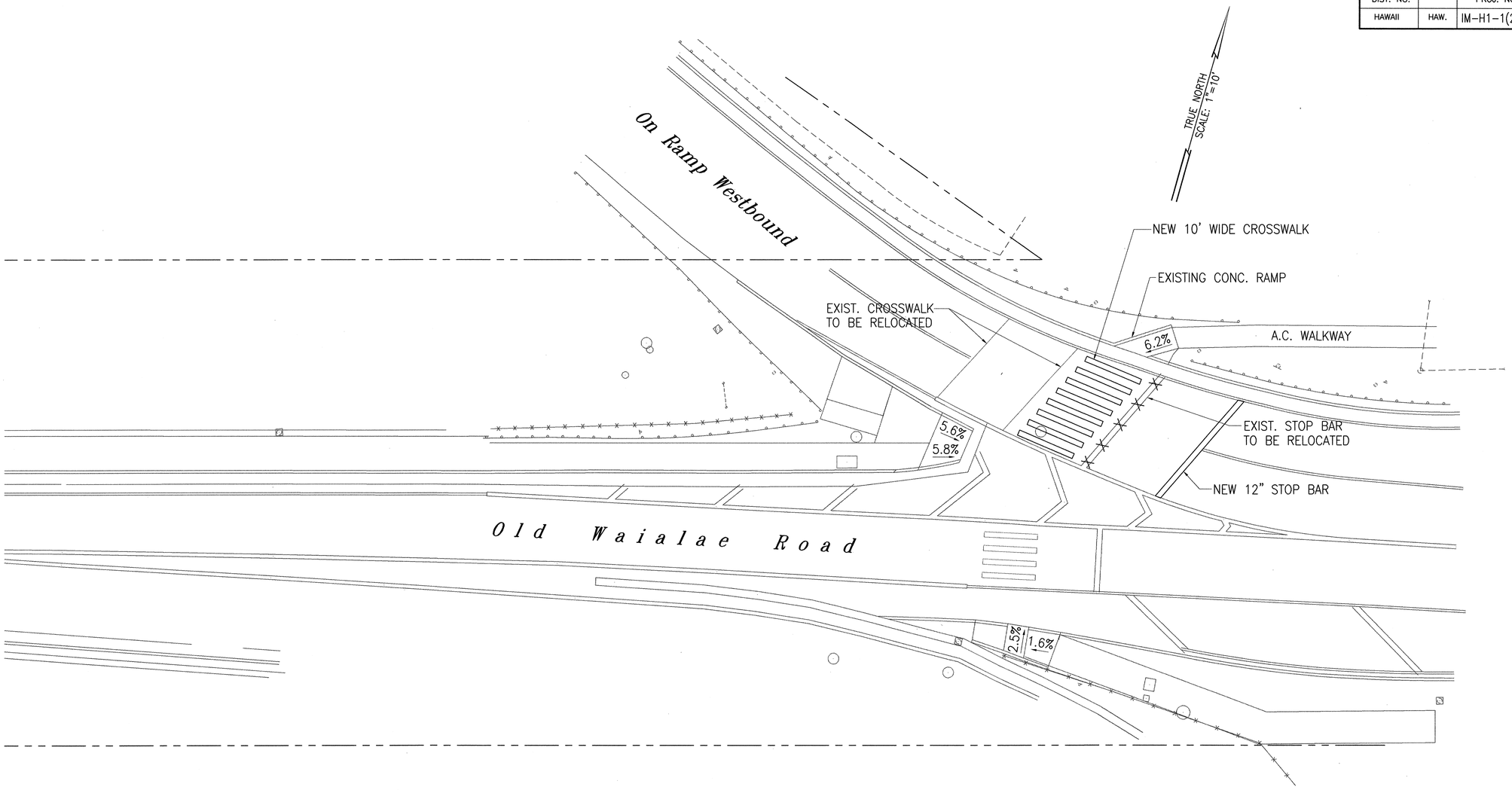

FN: 98-35\VKTDET10.DWG
05/1/99

ORIGINAL PLAN	SURVEY PLOTTED BY	DATE
	DRAWN BY	"
	TRACED BY	"
NOTEBOOK	DESIGNED BY	"
	QUANTITIES BY	"
No.	CHECKED BY	"

DETAILED ROADWAY PLAN
OLD WAIALAE ROAD
SCALE: 1"=10'

BENJAMIN S. TANAKA
LICENSED PROFESSIONAL ENGINEER
No. 2055-C
HAWAII, U.S.A.

THIS WORK WAS PREPARED BY ME OR UNDER MY SUPERVISION

Benjamin S. Tanaka

STATE OF HAWAII
DEPARTMENT OF TRANSPORTATION
HIGHWAYS DIVISION

DETAILED ROADWAY PLAN

INTERSTATE ROUTE H-1 RESURFACING
Vic. of Punchbowl Off Ramp to Kapiolani IC
F.A.I Project No. IM-H1-1(234)
Scale: 1"=10' Date: JUNE 1, 1999

SHEET NO. DR44 OF 54 SHEETS

FED. ROAD DIST. NO.	STATE	FED. AID PROJ. NO.	FISCAL YEAR	SHEET NO.	TOTAL SHEETS
HAWAII	HAW.	IM-H1-1(234)	2000	107	557

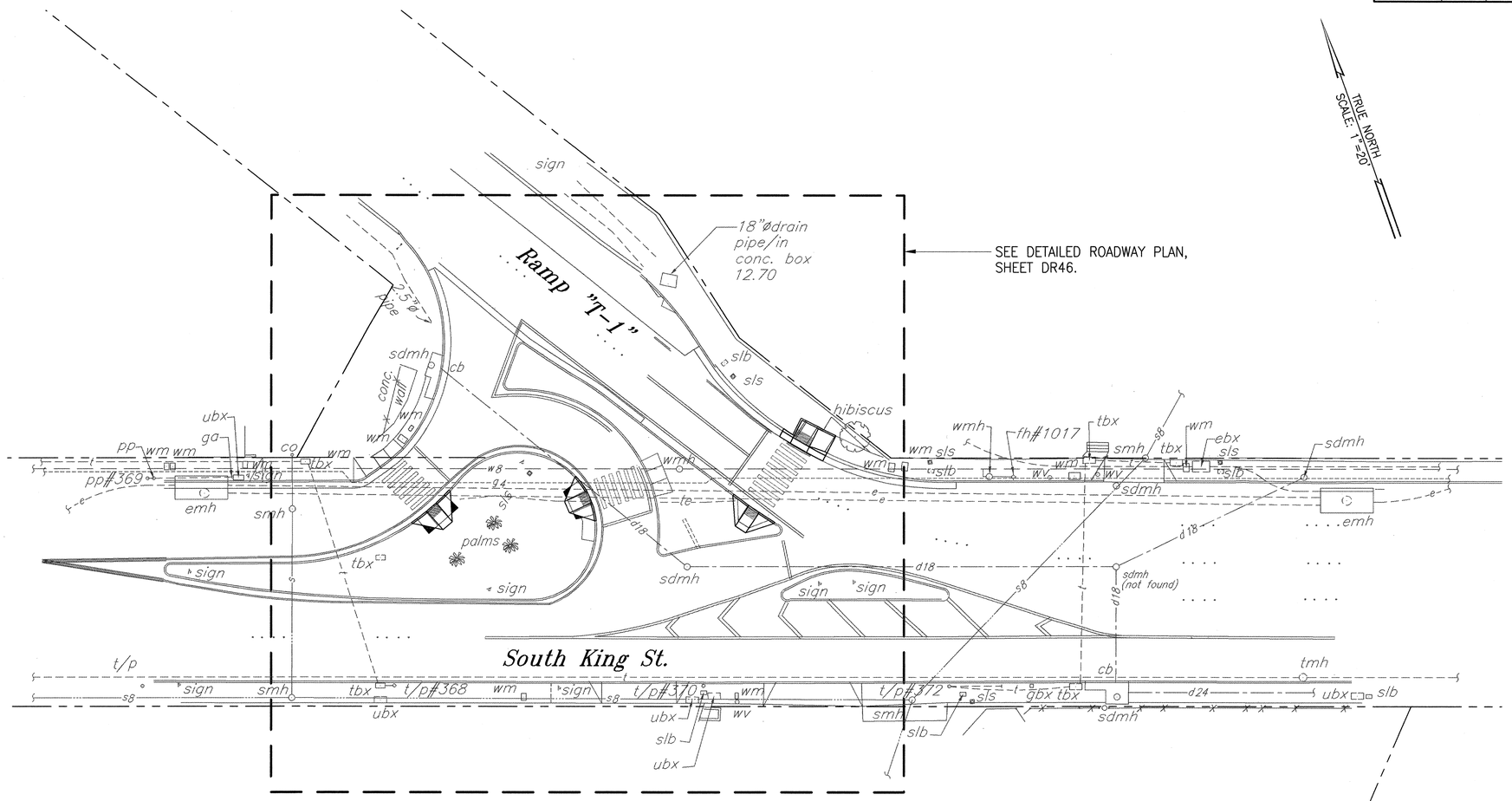

DETAILED ROADWAY PLAN

SCALE: 1"=20'

BENJAMIN S. TANAKA
LICENSED PROFESSIONAL ENGINEER
No. 2055-C
HAWAII, U.S.A.

THIS WORK WAS PREPARED BY ME OR UNDER MY SUPERVISION

Benjamin S. Tanaka

STATE OF HAWAII
DEPARTMENT OF TRANSPORTATION
HIGHWAYS DIVISION

DETAILED ROADWAY PLAN

INTERSTATE ROUTE H-1 RESURFACING
Vic. of Punchbowl Off Ramp to Kapiolani IC
F.A.I Project No. IM-H1-1(234)

Scale: 1"=20' Date: JUNE 1, 1999

SHEET NO. DR45 OF 54 SHEETS

ORIGINAL PLAN	SURVEY PLOTTED BY	DATE
	DRAWN BY	
NOTEBOOK	TRACED BY	
	DESIGNED BY	
No.	QUANTITIES BY	
	CHECKED BY	

FN: 98-35\SHT14.DWG
051199

FED. ROAD DIST. NO.	STATE	FED. AID PROJ. NO.	FISCAL YEAR	SHEET NO.	TOTAL SHEETS
HAWAII	HAW.	IM-H1-1(234)	2000	108	557

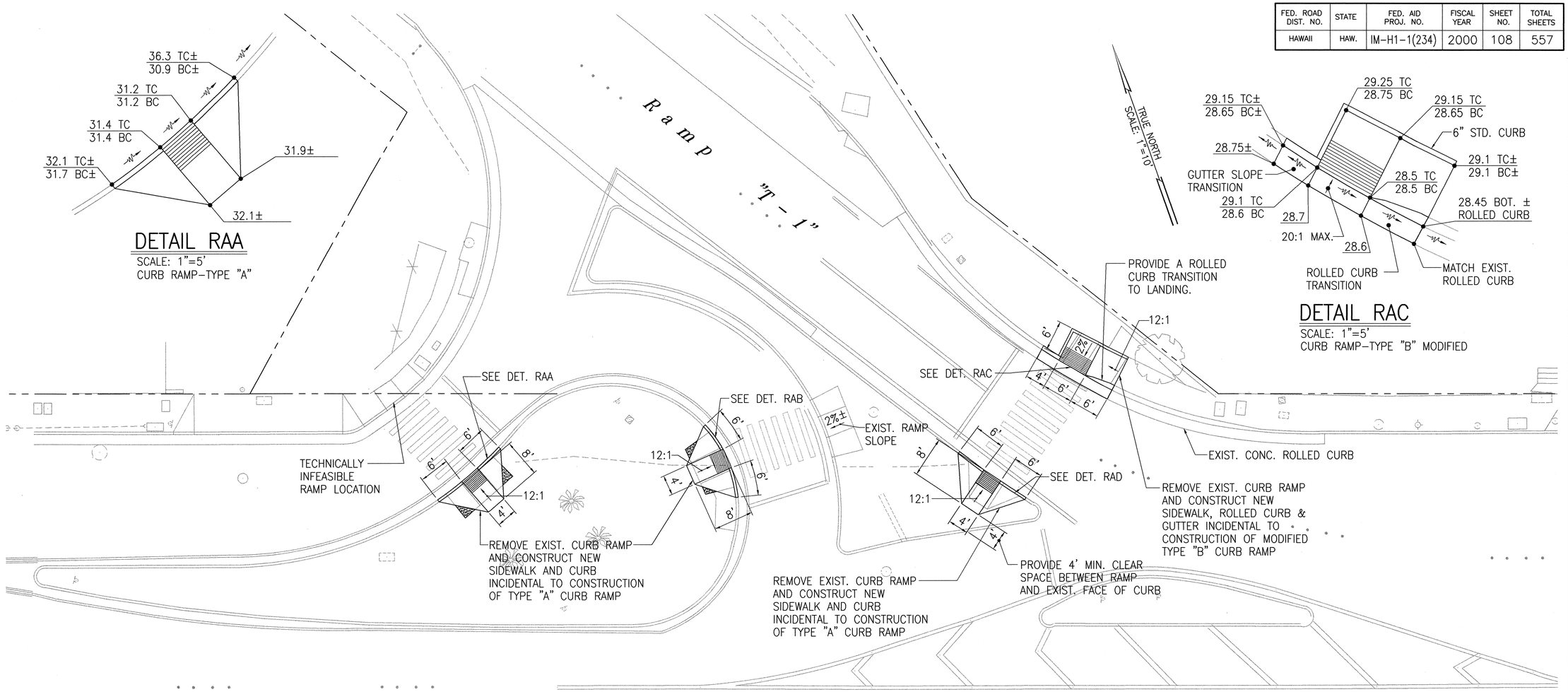

NOTE:
ALL RAMP SLOPES SHALL BE 12:1 MAX. UNLESS OTHERWISE INDICATED.

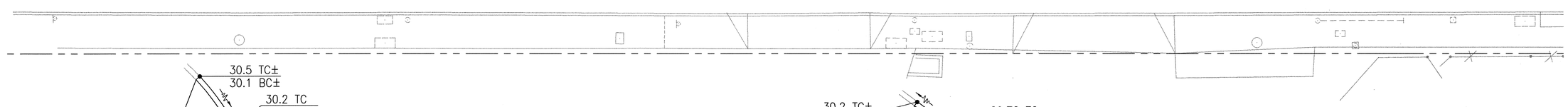

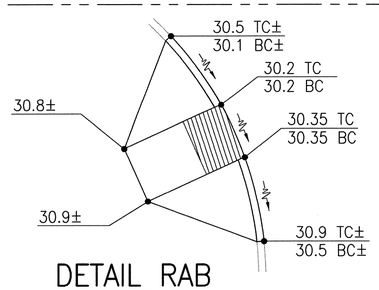

DETAILED ROADWAY PLAN
S. KING ST./RAMP "T-1"
SCALE: 1"=10'

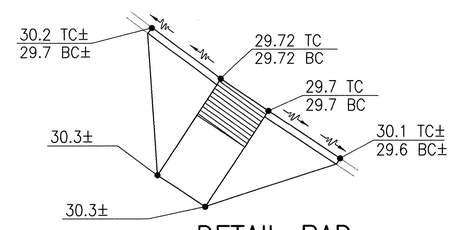

BENJAMIN S. TANAKA
LICENSED PROFESSIONAL ENGINEER
No. 2055-C
HAWAII, U.S.A.

THIS WORK WAS PREPARED BY ME OR UNDER MY SUPERVISION

STATE OF HAWAII
DEPARTMENT OF TRANSPORTATION
HIGHWAYS DIVISION

DETAILED ROADWAY PLAN

INTERSTATE ROUTE H-1 RESURFACING
Vic. of Punchbowl Off Ramp to Kapiolani IC
F.A.I Project No. IM-H1-1(234)
Scale: 1"=10' Date: JUNE 1, 1999

SHEET NO. DR46 OF 54 SHEETS

FN: 98-35\NTGET1.DWG
072799

ORIGINAL PLAN	SURVEY PLOTTED BY	DATE
	DRAWN BY	
	TRACED BY	
NOTEBOOK	DESIGNED BY	
	QUANTITIES BY	
No.	CHECKED BY	

FED. ROAD DIST. NO.	STATE	FED. AID PROJ. NO.	FISCAL YEAR	SHEET NO.	TOTAL SHEETS
HAWAII	HAW.	IM-H1-1(234)	2000	109	557

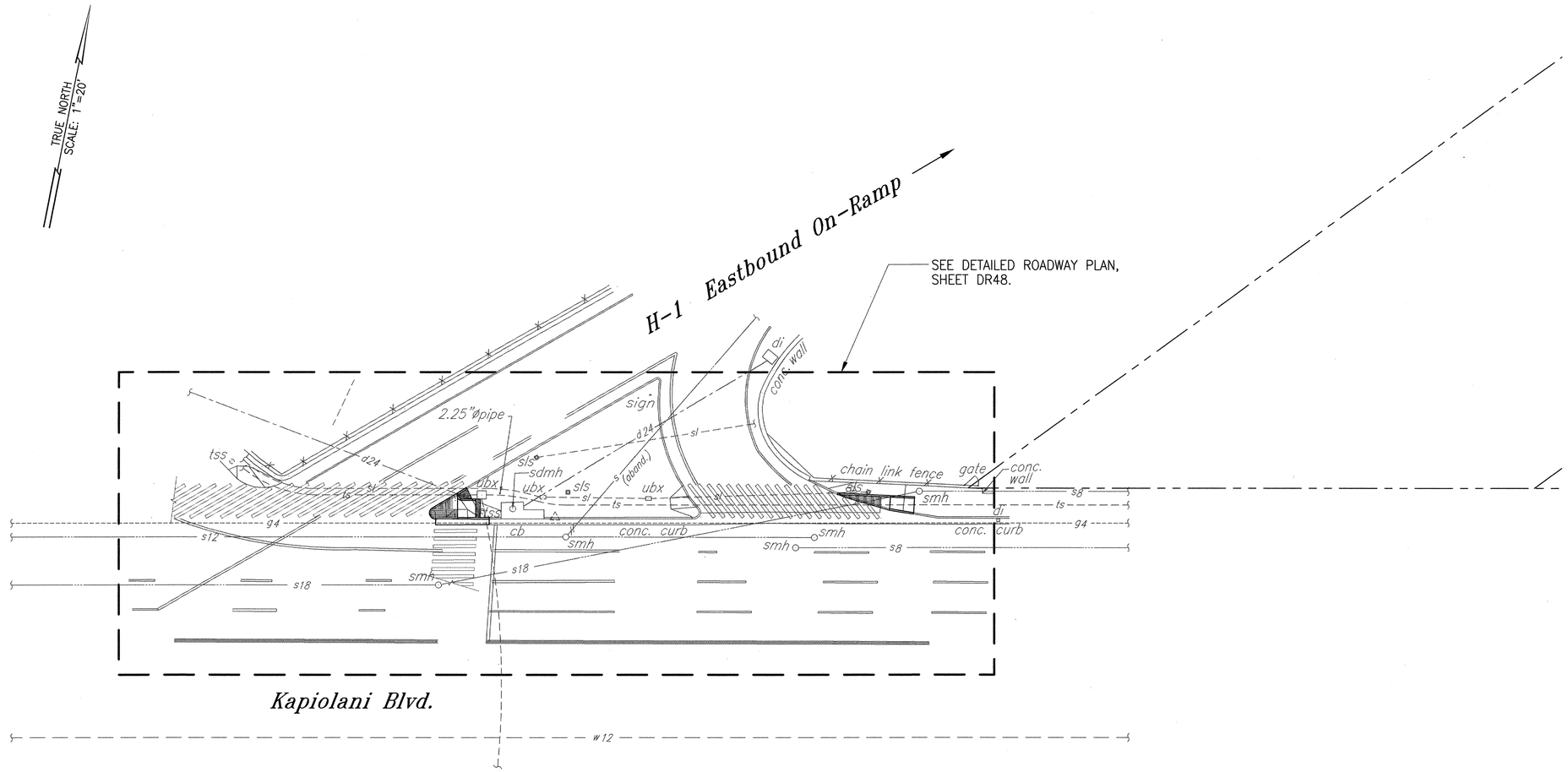

DETAILED ROADWAY PLAN

SCALE: 1"=20'

FN: 98-35\SHT17.DWG
08/1999

ORIGINAL PLAN	SURVEY PLOTTED BY	DATE
	DRAWN BY	
	TRACED BY	
NOTEBOOK	DESIGNED BY	
	QUANTITIES BY	
No.	CHECKED BY	

BENJAMIN S. TANAKA
LICENSED PROFESSIONAL ENGINEER
No. 2055-C
HAWAII, U.S.A.

THIS WORK WAS PREPARED BY ME OR UNDER MY SUPERVISION

Benjamin S. Tanaka

STATE OF HAWAII
DEPARTMENT OF TRANSPORTATION
HIGHWAYS DIVISION

DETAILED ROADWAY PLAN

INTERSTATE ROUTE H-1 RESURFACING
Vic. of Punchbowl Off Ramp to Kapiolani IC
F.A.I Project No. IM-H1-1(234)

Scale: 1"=20' Date: JUNE 1, 1999

SHEET NO. DR47 OF 54 SHEETS

FED. ROAD DIST. NO.	STATE	FED. AID PROJ. NO.	FISCAL YEAR	SHEET NO.	TOTAL SHEETS
HAWAII	HAW.	IM-H1-1(234)	2000	110	557

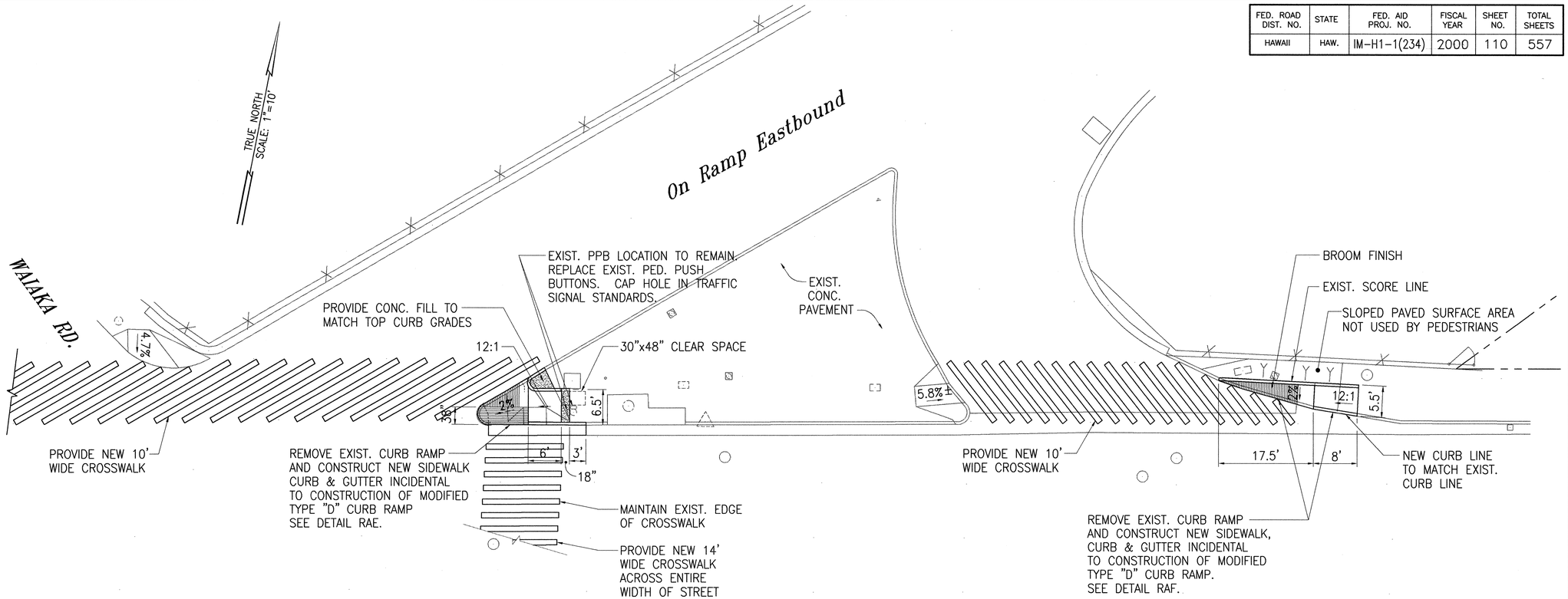

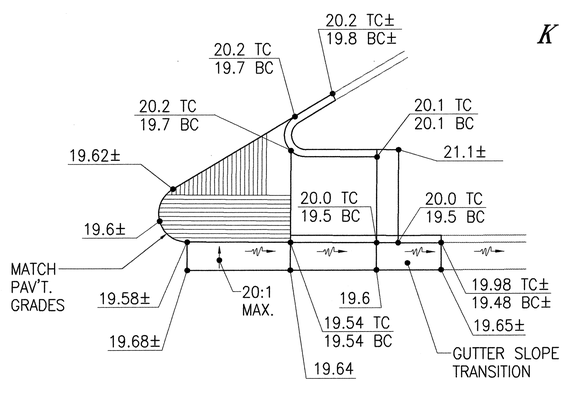

DETAIL RAE

SCALE: 1"=5'
CURB RAMP-TYPE "D" MODIFIED

NOTE:
ALL RAMP SLOPES SHALL BE 12:1 MAX. UNLESS OTHERWISE INDICATED.

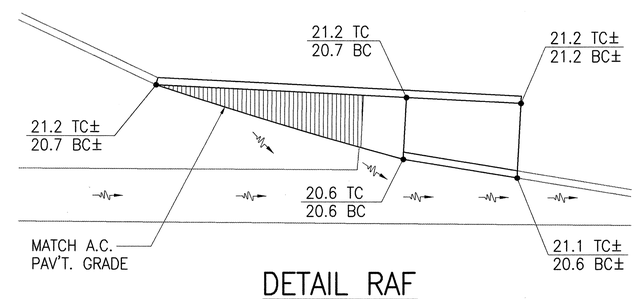

DETAIL RAF

SCALE: 1"=5'
CURB RAMP-TYPE "D" MODIFIED

DETAILED ROADWAY PLAN
KAPIOLANI BLVD./ON-RAMP

SCALE: 1"=10'

BENJAMIN S. TANAKA
LICENSED PROFESSIONAL ENGINEER
No. 2055-C
HAWAII, U.S.A.

THIS WORK WAS PREPARED BY ME OR UNDER MY SUPERVISION

STATE OF HAWAII
DEPARTMENT OF TRANSPORTATION
HIGHWAYS DIVISION

DETAILED ROADWAY PLAN

INTERSTATE ROUTE H-1 RESURFACING
Vic. of Punchbowl Off Ramp to Kapiolani IC
F.A.I Project No. IM-H1-1(234)
Scale: 1"=10' Date: JUNE 1, 1999

SHEET NO. DR48 OF 54 SHEETS

FN: 98-35\NTDET13.DWG
02/2099

SURVEY PLOTTED BY		DATE
DRAWN BY		"
TRACED BY		"
DESIGNED BY		"
QUANTITIES BY		"
CHECKED BY		"
ORIGINAL PLAN	NOTEBOOK	No.

FED. ROAD DIST. NO.	STATE	FED. AID PROJ. NO.	FISCAL YEAR	SHEET NO.	TOTAL SHEETS
HAWAII	HAW.	IM-H1-1(234)	2000	111	557

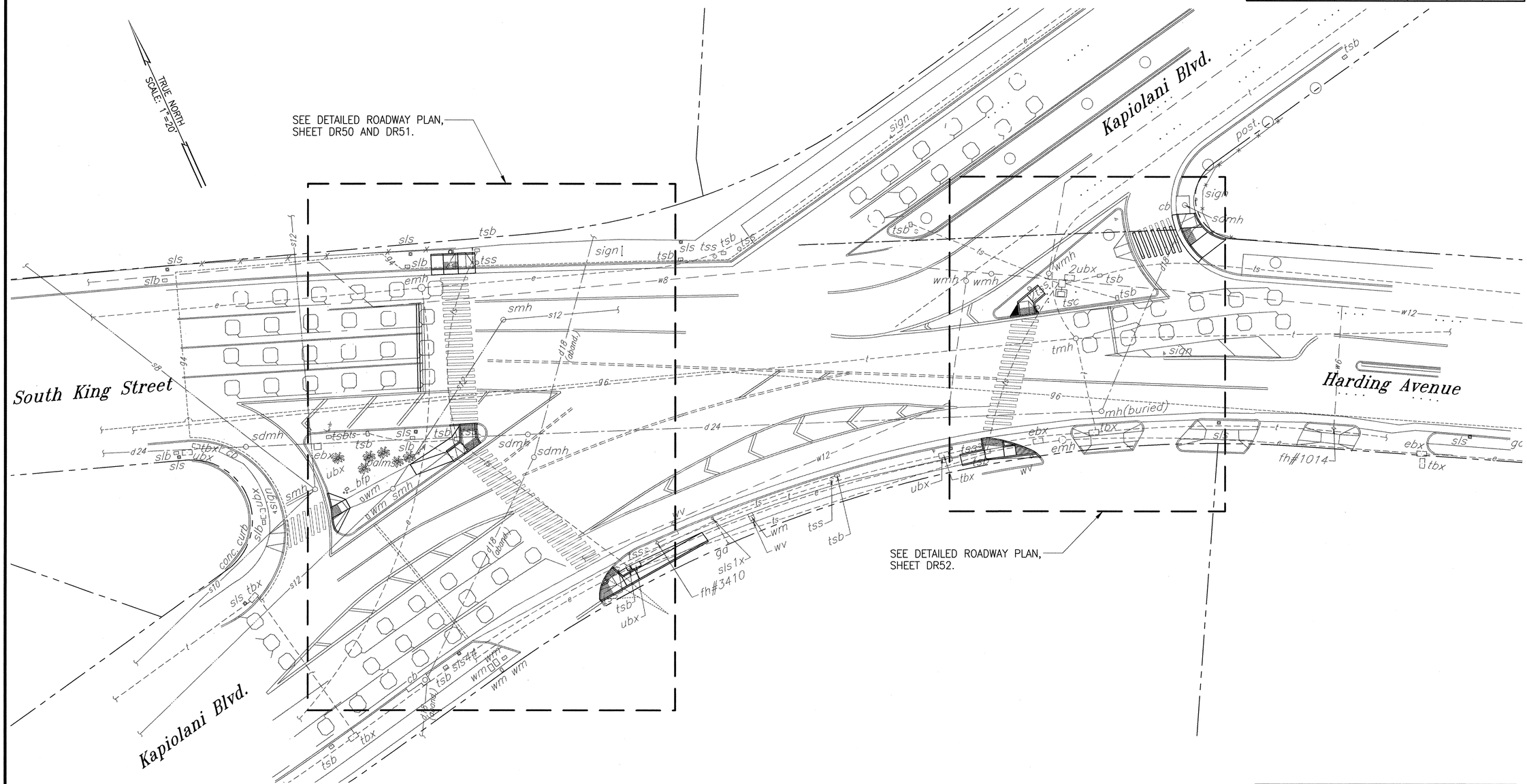

DETAILED ROADWAY PLAN

SCALE: 1"=20'

FN: 98-35\SHT15.DWG
08/1/99

ORIGINAL PLAN		DATE
	SURVEY PLOTTED BY	
	DRAWN BY	"
	TRACED BY	"
NOTEBOOK	DESIGNED BY	"
	QUANTITIES BY	"
No.	CHECKED BY	"

BENJAMIN S. TANAKA
LICENSED PROFESSIONAL ENGINEER
No. 2055-C
HAWAII, U.S.A.

THIS WORK WAS PREPARED BY ME OR UNDER MY SUPERVISION

Benjamin S. Tanaka

STATE OF HAWAII
DEPARTMENT OF TRANSPORTATION
HIGHWAYS DIVISION

DETAILED ROADWAY PLAN

INTERSTATE ROUTE H-1 RESURFACING
Vic. of Punchbowl Off Ramp to Kapiolani IC
F.A.I Project No. IM-H1-1(234)

Scale: 1"=20' Date: JUNE 1, 1999

SHEET NO. DR49 OF 54 SHEETS

FED. ROAD DIST. NO.	STATE	FED. AID PROJ. NO.	FISCAL YEAR	SHEET NO.	TOTAL SHEETS
HAWAII	HAW.	IM-H1-1(234)	2000	112	557

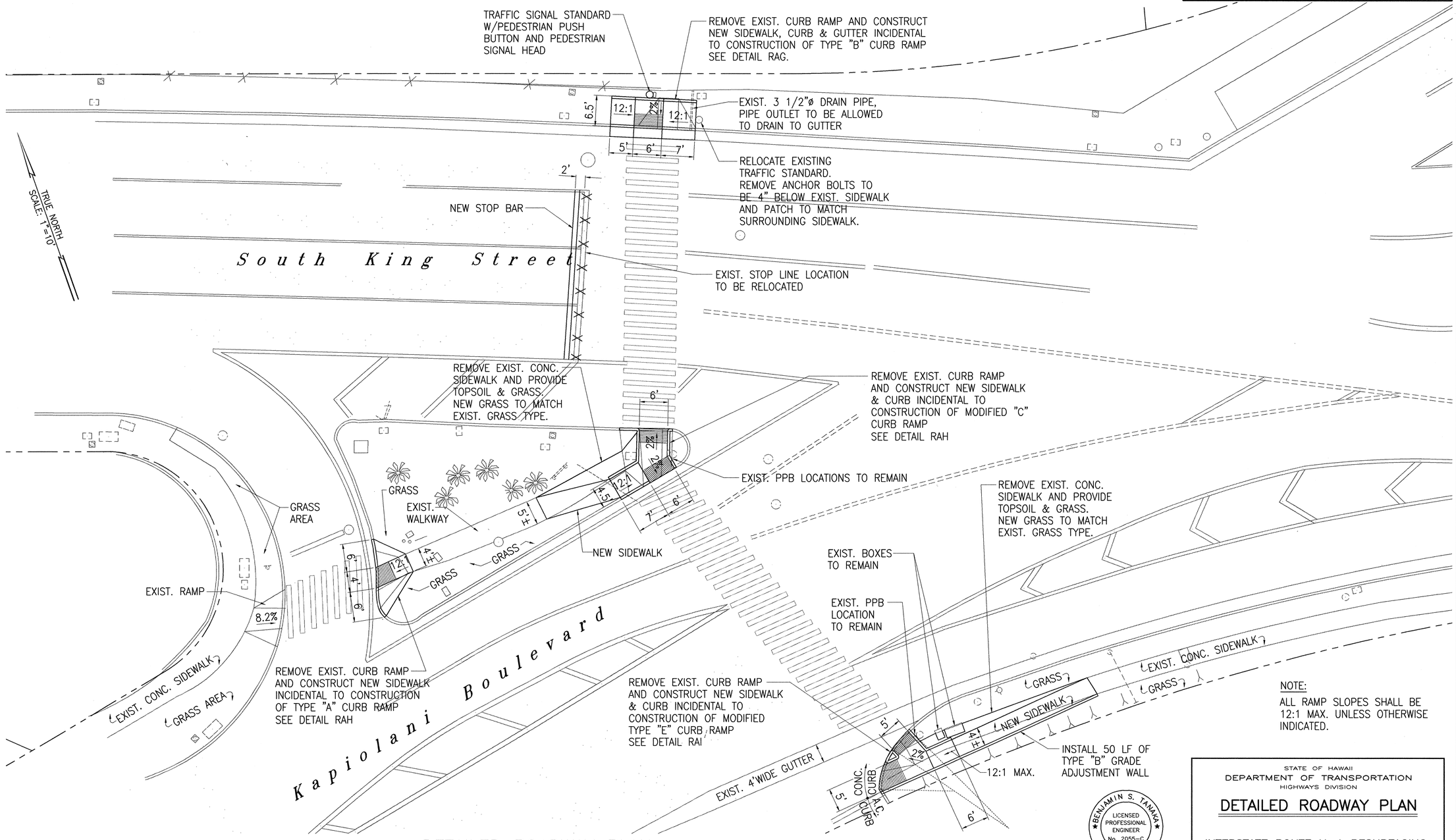

NOTE:
ALL RAMP SLOPES SHALL BE 12:1 MAX. UNLESS OTHERWISE INDICATED.

DETAILED ROADWAY PLAN
KAPIOLANI BLVD./S. KING ST.
SCALE: 1"=10'

BENJAMIN S. TANAKA
LICENSED PROFESSIONAL ENGINEER
No. 2055-C
HAWAII, U.S.A.

THIS WORK WAS PREPARED BY ME OR UNDER MY SUPERVISION

STATE OF HAWAII
DEPARTMENT OF TRANSPORTATION
HIGHWAYS DIVISION

DETAILED ROADWAY PLAN

INTERSTATE ROUTE H-1 RESURFACING
Vic. of Punchbowl Off Ramp to Kapiolani IC
F.A.I Project No. IM-H1-1(234)
Scale: 1"=10' Date: JUNE 1, 1999

SHEET NO. DR50 OF 54 SHEETS

FN: 98-35\NTDET14.DWG
05/1999

ORIGINAL PLAN	SURVEY PLOTTED BY	DATE
	DRAWN BY	
NOTEBOOK	TRACED BY	
	DESIGNED BY	
No.	QUANTITIES BY	
	CHECKED BY	

FED. ROAD DIST. NO.	STATE	FED. AID PROJ. NO.	FISCAL YEAR	SHEET NO.	TOTAL SHEETS
HAWAII	HAW.	IM-H1-1(234)	2000	113	557

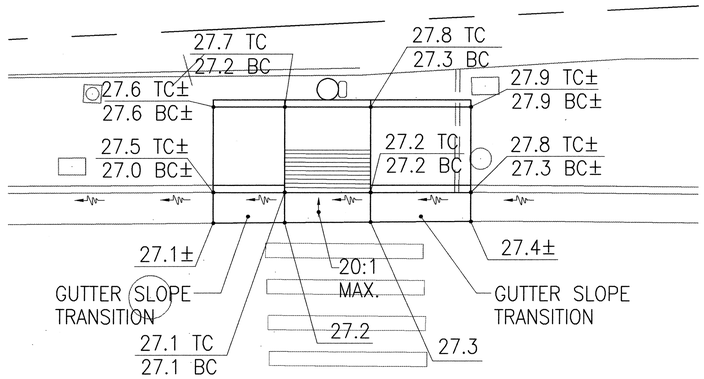

DETAIL RAG

SCALE: 1"=5'
CURB RAMP-TYPE "B"

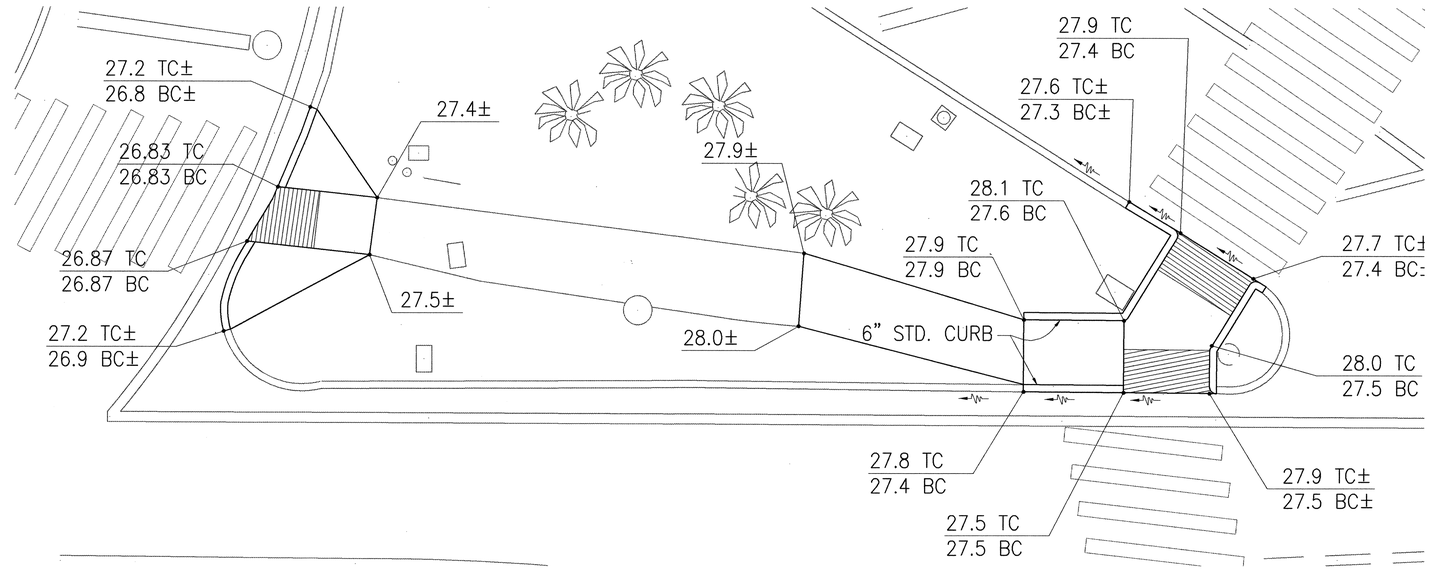

DETAIL RAH

SCALE: 1"=5'
CURB RAMPS-TYPES "A" & "C" MODIFIED

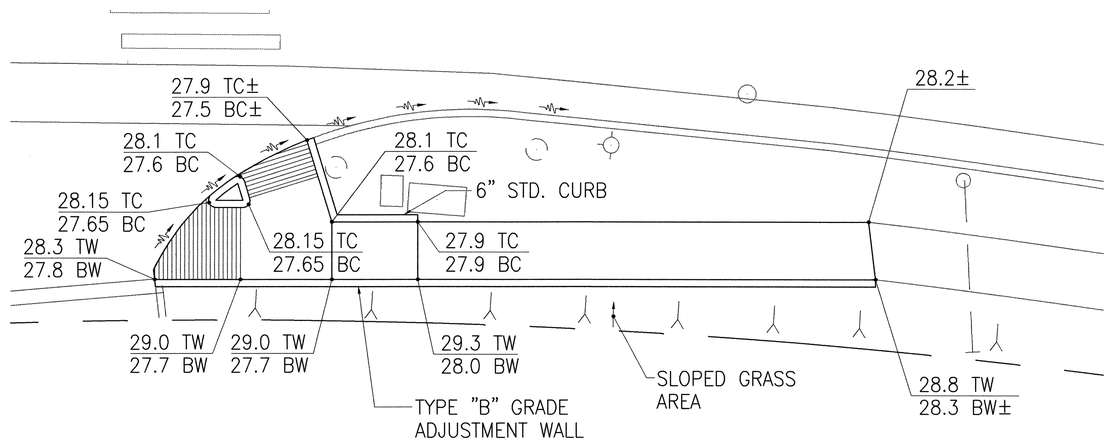

DETAIL RAI

SCALE: 1"=5'
CURB RAMP-TYPE "E" MODIFIED

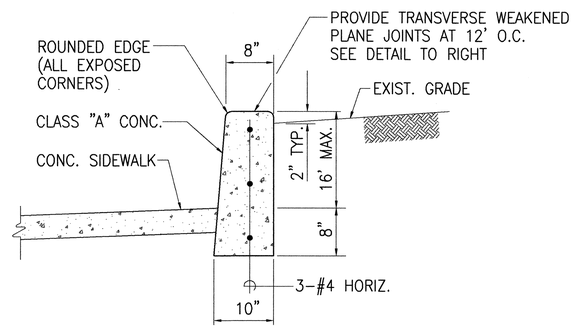

TYPE "B" GRADE ADJUSTMENT WALL DETAIL

SCALE: 1"=1'-0"

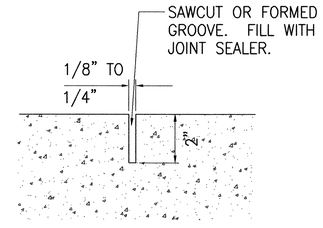

TRANSVERSE WEAKENED PLANE JOINT

NOT TO SCALE

BENJAMIN S. TANAKA
LICENSED PROFESSIONAL ENGINEER
No. 2055-C
HAWAII, U.S.A.

THIS WORK WAS PREPARED BY ME OR UNDER MY SUPERVISION

STATE OF HAWAII
DEPARTMENT OF TRANSPORTATION
HIGHWAYS DIVISION

DETAILED ROADWAY PLAN

INTERSTATE ROUTE H-1 RESURFACING
Vic. of Punchbowl Off Ramp to Kapiolani IC
F.A.I Project No. IM-H1-1(234)
Scale: AS NOTED Date: JUNE 1, 1999

SHEET NO. DR51 OF 54 SHEETS

FN: 98-35\CRBRAMPDET1.DWG
07/28/99

ORIGINAL PLAN	SURVEY PLOTTED BY	DATE
	DRAWN BY	
	TRACED BY	
NOTEBOOK	DESIGNED BY	
No.	QUANTITIES BY	
	CHECKED BY	

FED. ROAD DIST. NO.	STATE	FED. AID PROJ. NO.	FISCAL YEAR	SHEET NO.	TOTAL SHEETS
HAWAII	HAW.	IM-H1-1(234)	2000	114	557

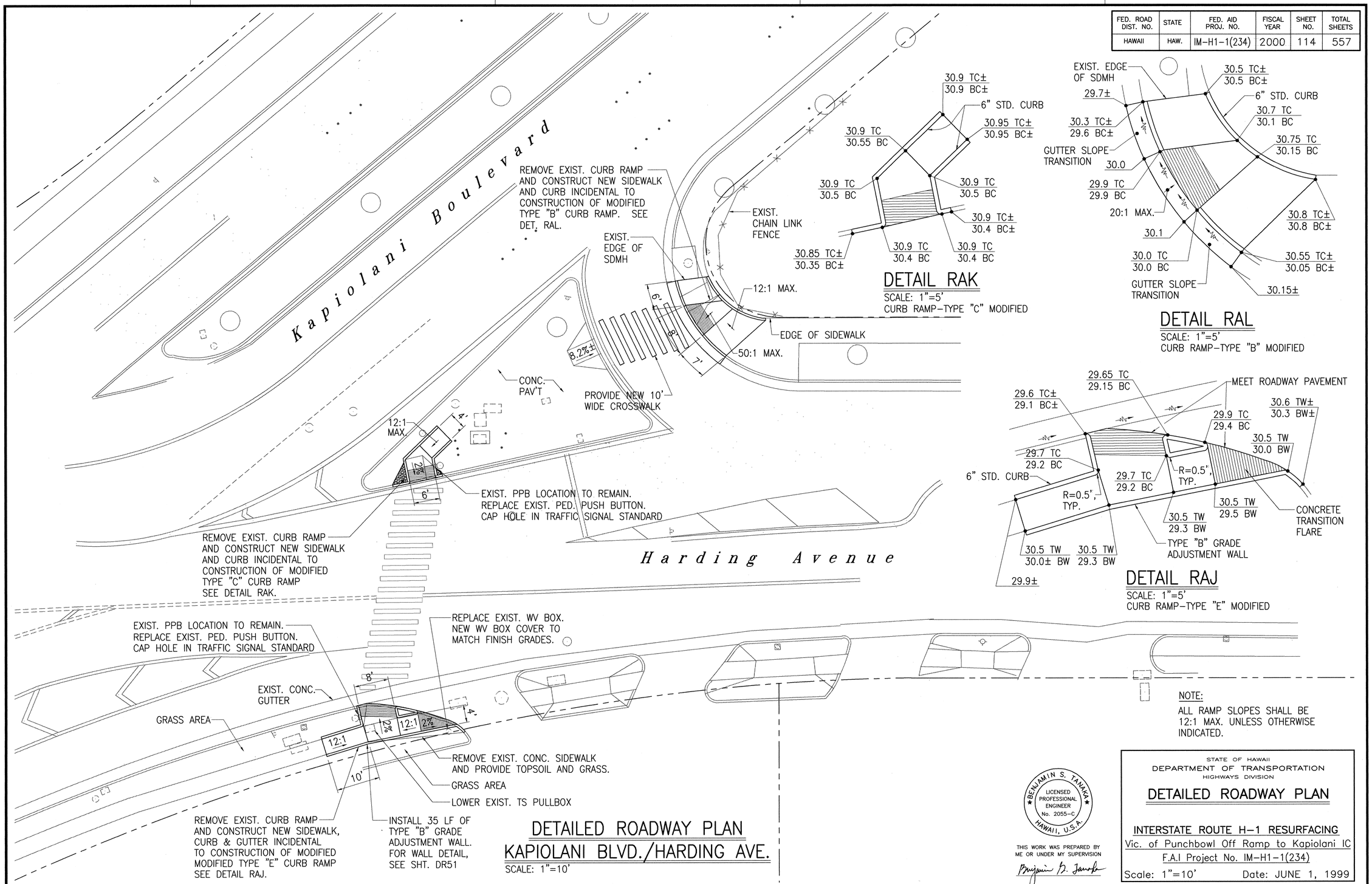

NOTE:
ALL RAMP SLOPES SHALL BE 12:1 MAX. UNLESS OTHERWISE INDICATED.

DETAILED ROADWAY PLAN
KAPIOLANI BLVD./HARDING AVE.
SCALE: 1"=10'

BENJAMIN S. TANAKA
LICENSED PROFESSIONAL ENGINEER
No. 2055-C
HAWAII, U.S.A.

THIS WORK WAS PREPARED BY ME OR UNDER MY SUPERVISION

STATE OF HAWAII
DEPARTMENT OF TRANSPORTATION
HIGHWAYS DIVISION

DETAILED ROADWAY PLAN

INTERSTATE ROUTE H-1 RESURFACING
Vic. of Punchbowl Off Ramp to Kapiolani IC
F.A.I Project No. IM-H1-1(234)
Scale: 1"=10' Date: JUNE 1, 1999

SHEET NO. DR52 OF 54 SHEETS

ORIGINAL PLAN | NOTEBOOK No. | SURVEY PLOTTED BY | DRAWN BY | TRACED BY | DESIGNED BY | QUANTITIES BY | CHECKED BY | DATE

F.N. 08-35\INTDET15.DWG
052499

FED. ROAD DIST. NO.	STATE	FED. AID PROJ. NO.	FISCAL YEAR	SHEET NO.	TOTAL SHEETS
HAWAII	HAW.	IM-H1-1(234)	2000	115	557

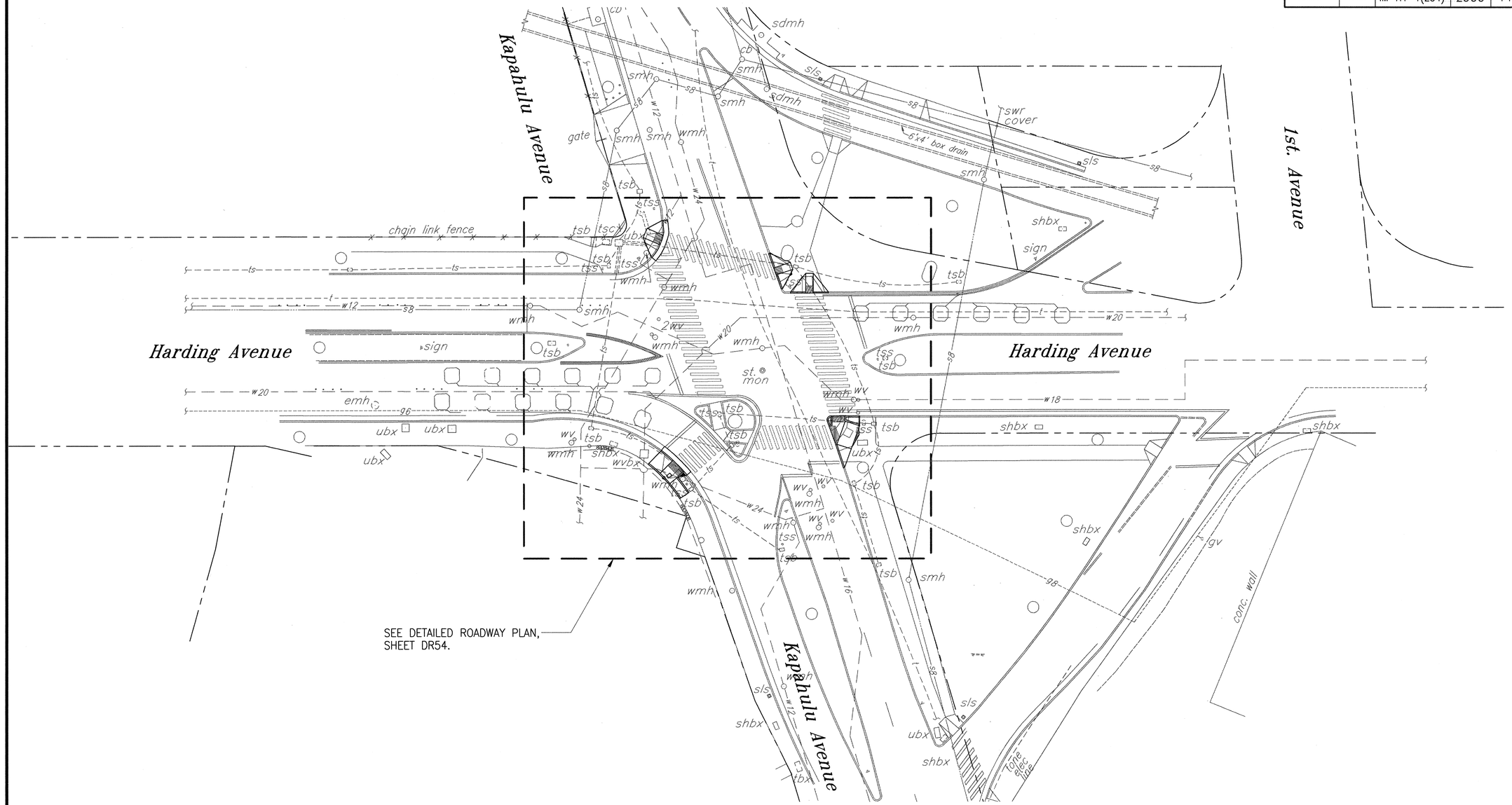

DETAILED ROADWAY PLAN

SCALE: 1"=20'

FN: 98-35\SHT16.DWG
081199

ORIGINAL PLAN	SURVEY PLOTTED BY	DATE
	DRAWN BY	"
NOTEBOOK	TRACED BY	"
	DESIGNED BY	"
No.	QUANTITIES BY	"
	CHECKED BY	"

BENJAMIN S. TANAKA
LICENSED PROFESSIONAL ENGINEER
No. 2055-C
HAWAII, U.S.A.

THIS WORK WAS PREPARED BY ME OR UNDER MY SUPERVISION

STATE OF HAWAII
DEPARTMENT OF TRANSPORTATION
HIGHWAYS DIVISION

DETAILED ROADWAY PLAN

INTERSTATE ROUTE H-1 RESURFACING
Vic. of Punchbowl Off Ramp to Kapiolani IC
F.A.I Project No. IM-H1-1(234)

Scale: 1"=20' Date: JUNE 1, 1999

SHEET NO. DR53 OF 54 SHEETS

FED. ROAD DIST. NO.	STATE	FED. AID PROJ. NO.	FISCAL YEAR	SHEET NO.	TOTAL SHEETS
HAWAII	HAW.	IM-H1-1(234)	2000	116	557

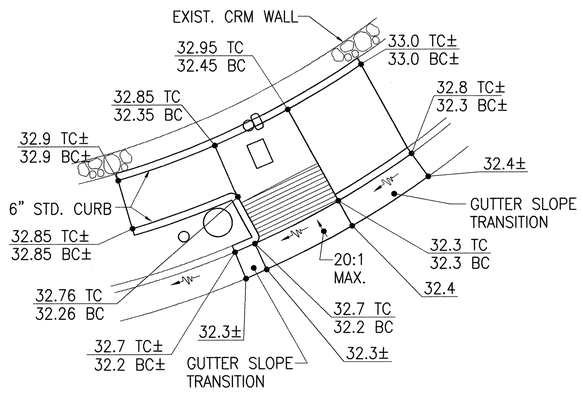

DETAIL RAM

SCALE: 1"=5'
CURB RAMP-TYPE "B" MODIFIED

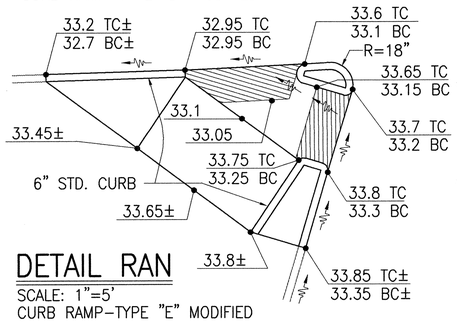

DETAIL RAN

SCALE: 1"=5'
CURB RAMP-TYPE "E" MODIFIED

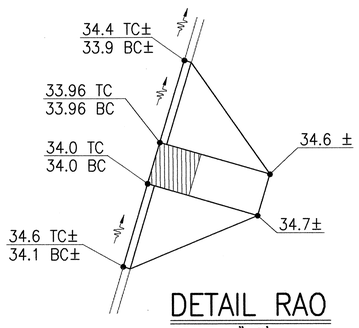

DETAIL RAO

SCALE: 1"=5'
CURB RAMP-TYPE "A"

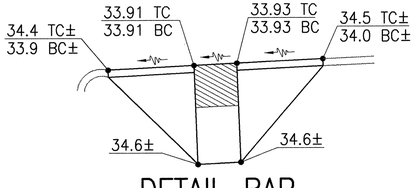

DETAIL RAP

SCALE: 1"=5'
CURB RAMP-TYPE "A"

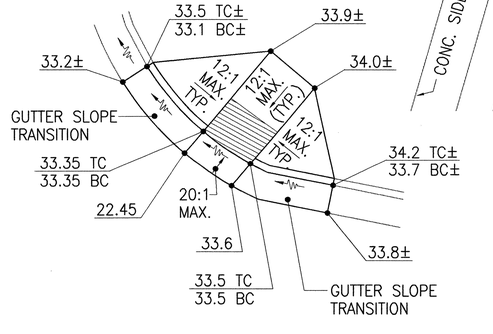

DETAIL RAQ

SCALE: 1"=5'
CURB RAMP-TYPE "A"

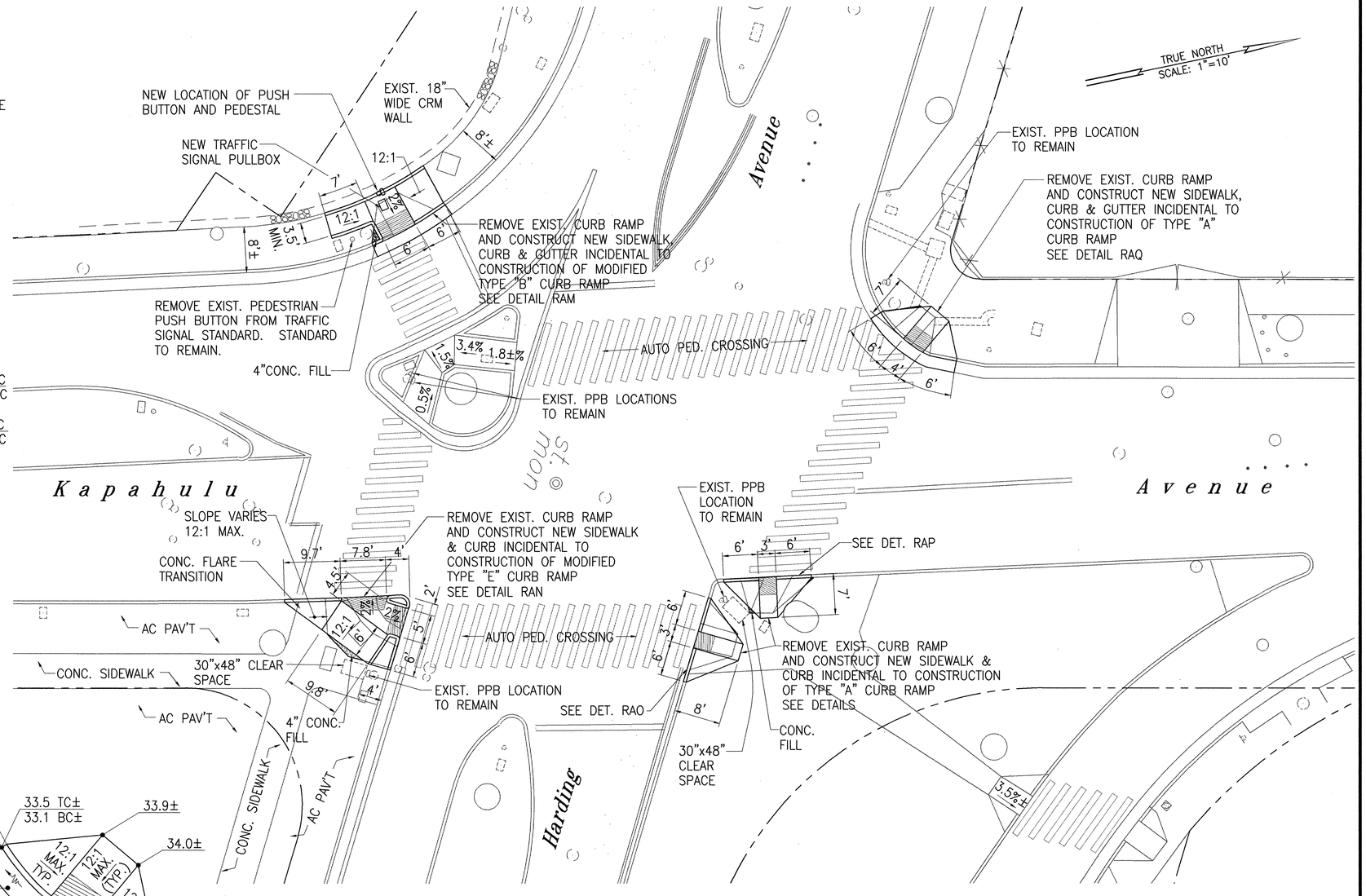

NOTE:

ALL RAMP SLOPES SHALL BE 12:1 MAX. UNLESS OTHERWISE INDICATED.

DETAILED ROADWAY PLAN
KAPAHULU AVE./HARDING AVE.

SCALE: 1"=10'

BENJAMIN S. TANAKA
LICENSED PROFESSIONAL ENGINEER
No. 2055-C
HAWAII, U.S.A.

THIS WORK WAS PREPARED BY ME OR UNDER MY SUPERVISION

STATE OF HAWAII
DEPARTMENT OF TRANSPORTATION
HIGHWAYS DIVISION

DETAILED ROADWAY PLAN

INTERSTATE ROUTE H-1 RESURFACING
Vic. of Punchbowl Off Ramp to Kapiolani IC
F.A.I Project No. IM-H1-1(234)

Scale: 1"=10' Date: JUNE 1, 1999

SHEET NO. DR54 OF 54 SHEETS

ORIGINAL PLAN	SURVEY PLOTTED BY	DATE
	DRAWN BY	
	TRACED BY	
NOTEBOOK	DESIGNED BY	
No.	QUANTITIES BY	
	CHECKED BY	

FIL: 08-35\NTDET12.DWG
020099