FED. ROAD DIST. NO.	STATE	FED. AID PROJ. NO.	FISCAL YEAR	SHEET NO.	TOTAL SHEETS
HAWAII	HAW.	IM-HI-1(219)	1998	ADD. 110	378

GENERAL NOTES

DESIGN SPECIFICATIONS:

1. AASHTO Standard Specifications for Highway Bridges (16th edition), with subsequent Interim Specification 1996.
2. AASHTO Standard Specifications for Seismic Design of Highway Bridges, Seismic Performance Category B, acceleration coefficient of 0.17.

ALLOWABLE DESIGN STRESSES:

1. Reinforced concrete: $f_c = 0.40\ f'c$
2. Reinforced steel: $f_s = 20{,}000$ psi for Grade 40, 24,000 psi for Grade 60
3. Reinforced Masonry: $f'm = (0.333)\ f'm = 1{,}250$ psi

MATERIALS:

1. Reinforced concrete: Class A
2. Reinforced steel: ASTM A 615, Grade 40 or Grade 60.
3. Masonry units shall be 8"x8"x16"; 12"x8"x16"; 8"x8"x8" or 12"x8"x8" conc. hollow block, earth tone colored (see specifications), Grade N-II, Specified Compressive Strength, f'm shall be 3,750 psi. No special inspection. Mortar shall be Type S and reinforcing bars for walls shall be Grade 60. New CMU wall shall be solid grouted (all cells grouted).
4. Admixture in concrete: See Special Provisions
5. All expansion and premolded joint filler shall be incidental to concrete and will not be paid for separately.
6. All structural steel shall be ASTM A 36 hot-dip galvanized after fabrication.
7. All anchor bolts, washers and nuts shall be ASTM A 325, hot-dip galvanized after fabrication, unless noted otherwise.
8. All welding shall be in accordance with the current edition of Reinforcing Steel Welding Code AWS D 1.4.

GENERAL:

1. See Hawaii Standard Specifications for Road, Bridge and Public Works Construction, 1994 together with Special Provisions prepared for this project.
2. The Contractor shall verify all dimensions in the field before commencing with work.
3. The Contractor shall verify the location of all existing utility lines near structures and notify their respective owners before commencing with work.
4. The Contractor, at his own expense, shall keep the project area free from dust nuisance. The work shall be in conformance with the air pollution control standards and regulations of the State of Hawaii Department of Health.
5. Any damage to the existing structures due to the Contractor's operation shall be repaired at his expense, to the satisfaction of the Engineer.
6. Except as noted otherwise, all dimensions are measured plumb.
7. All footings shall bear on firm undisturbed natural soils or properly compacted embankment fill.
8. Excavation for all footings and footing keys shall be accomplished by maintaining as near a vertical cut as possible. In the event of over-excavation, the space between the footing or footing key and ground shall be filled with a minimum of Class D concrete at the Contractor's expense and as directed by the Engineer.
9. At the time concrete is placed, reinforcing shall be free from mud, oil, laitance or other coatings adversely affecting bond capacity.
10. For Concrete Finish, see Special Provisions. Unless noted otherwise chamfer all exposed concrete edges three-quarters (3/4) of an inch.
11. Weepholes, 4 inches in diameter, shall be placed not more than 10 feet on center along the retaining walls. A 12 inch minimum thick filter gravel drain shall be placed along the entire length of wall connecting the weepholes. Weepholes shall be incidental to concrete in retaining walls.
12. Reinforcement, dowels and other embedded items shall be positively secured before pouring.
13. For steel reinforcing, stagger all splices where possible.
14. Steel reinforcing shall be supported, bent and placed as per ACI Detailing Manual, 1994.
15. Unless noted otherwise, minimum reinforcement cover shall satisfy AASHTO Standard Specifications for Highway Bridges (16th Edition).
16. All anchor bolts shall be high strength bolts conforming to the requirements of ASTM A 325. Heads of through bolts for guardrail connections shall be placed on the traffic side of the rail.
17. For the installation of anchor bolts for highway lighting standards and expressway signs, the Contractor shall provide rigid templates to maintain the proper locations and protection of such anchor bolts at all times during the period of construction. Exact methods shall be approved by the Engineer.
18. Contract items will be paid for in units indicated in the Estimated Quantities.
19. For Concrete Masonry Noise Barrier Walls, provide control joints at 30'-0" maximum spacing. Provide expansion joints at 96 ft. maximum spacing.

REFERENCE:

1. Refer to Standard Plans for additional details and notes not covered by details and typical drawings.

ORIGINAL PLAN	SURVEY PLOTTED BY		DATE SEP.1996
	DRAWN BY	LMA	
	TRACED BY		
NOTE BOOK	DESIGNED BY	DCO	SEP. 1996
	QUANTITIES BY	JFU	SEP. 1996
No.	CHECKED BY	DCO	SEP. 1996

ABBREVIATIONS

Approx.	Approximate	Ftg.	Footing	Opp.	Opposite
BFE	Bottom Footing Elevation	FF	Front face	PL	Plate
℄	Baseline	Flash'g	Flashing	R	Radius
Bot.	Bottom	F.W.R.	Fort Weaver Road	Ref.	Reference
Bm.	Beam	Galv.	Galvanized	Ret.	Retaining
℄	Center line	Gr., Grd.	Grade	Reinf.	Reinforcing
Cl.	Clear	H	Height	Rdwy	Roadway
CMU	Concrete Masonry Unit	H.S.	High Strength	Rt.	Right
Conc.	Concrete	Horiz.	Horizontal	R/W	Right of Way
Const.	Construction	Hwy	Highway	Sect.	Section
Cont.	Continuous	Inv.	Invert	Sht.	Sheet
Cu. Yd. C.Y.	Cubic Yard	I.B.	Inbound	Spc'd.	Spaced
Det.	Detail	Jt.	Joint	Spc'g	Spacing
Dia., ø	Diameter	L	Length	Specs.	Specifications
Ea.	Each	Lt.	Left	Sta.	Station
EF	Each face	Lg.	Long	Std.	Standard
Elec.	Electrical	Longit.	Longitudinal	Symm.	Symmetrical
Elev., El.	Elevation	Max.	Maximum	T&B	Top and Bottom
Exist.	Existing	Min.	Minimum	TOW	Top of Wall
Exp.	Expansion	No.	Number	Typ.	Typical
Ext.	Extension	O.B.	Outbound	Vert.	Vertical
Eq.	Equal	o.c., oc	On center	W/	With
Fin.	Finish	O.D.	Outside dimension		

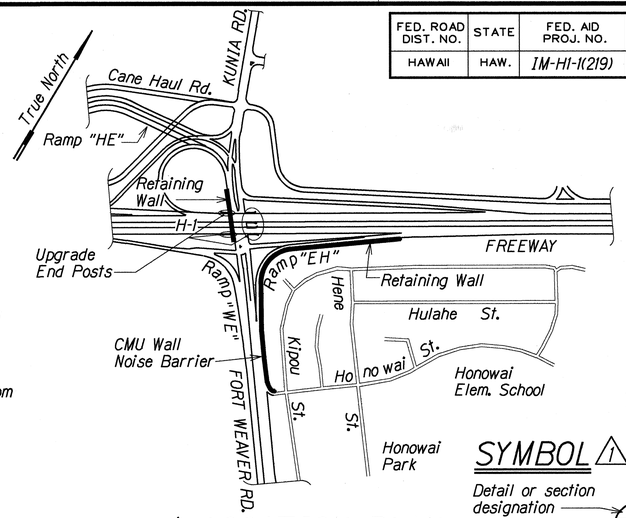

1 LOCATION PLAN

Not to Scale

SYMBOL 1

Detail or section designation — A
Sheet number section is cut or detail location — R1 R1 — Sheet number detail is drawn on

INDEX TO DRAWINGS

SHEET	DESCRIPTION
R1	Index To Drawings; Ramp "EH" & "HE" - General Notes; Location Plan; Estimated Quantities
R2	Ramp "EH" - Plan & Elevation, Fort Weaver Road ⓛ Sta. 65+49 To 67+19
R3	Ramp "EH" - Plan & Elevation, Fort Weaver Road ⓛ Sta. 65+49 To Ramp "EH" ⓛ Sta. 1+50
R4	Ramp "EH" - Plan & Elevation, Ramp "EH" ⓛ Sta. 1+50 To 4+00
R5	Ramp "EH" - Plan & Elevation, Ramp "EH" ⓛ Sta. 4+00 To 6+50
R6	Ramp "EH" - Plan & Elevation, Ramp "EH" ⓛ Sta. 6+50 To 8+50
R7	Ramp "EH" - Plan & Elevation, Ramp "EH" ⓛ Sta. 8+50 To 10+50
R8	Ramp "EH" - Plan & Elevation, Ramp "EH" ⓛ Sta. 10+50 To 12+50
R9	Ramp "EH" - Plan & Elevation, Ramp "EH" ⓛ Sta. 12+50 To 14+50
R10	Ramp "EH" - Plan & Elevation, Ramp "EH" ⓛ Sta. 14+50 To 16+00
R11	Ramp "EH" - Plan & Elevation, Ramp "EH" ⓛ Sta. 16+00 To 18+25
R12	Ramp "EH" - Plan & Elevation, Ramp "EH" ⓛ Sta. 18+25 To 20+60.59
R13	Ramp "HE" - Plan & Elevation, Ramp "HE" ⓛ Sta. 0+80 To 3+07.33
1 R14	Ramp "EH" - Type "C", "T1", "L1", "L2" & "L3" Typical Section; Schedule Of Dimensions And Reinforcing Steel
R15	Ramp "EH" - Type "C" Wall Typical Section; Ramp "HE" - Type "T" Wall Typical Section; Schedules Of Dimensions And Reinforcing Steel
R16	Expansion Joint; Footing Step-up Details; Typical Excavation And Backfill Pay Limits
R17	Wall Details At Light Standard And Junction Box
R18	Closure Wall Elevation; CMU Control Joint Details
R19	Subdivision Name - Plan, Elevation And Section; Letter Size Detail
R20	Signs E-1, E-2, E-3 & E-4 - Cantilever Sign Support Post, Arm And Connection Details
R21	Signs E-1, E-2, E-3 & E-4 - Concrete Footing And Pedestal Details
R22	Ramp "EH" - End Post Connection Plan, Elevation And Sections
R23	Ramp "HE" - End Post Connection Plan, Elevation And Sections
R24	Layout Plan And Estimated Quantities; Plan And Elevation - Type "A" End Post Upgrade; Typical Structure Excavation And Backfill
R25	Typical Type "A" End Post Upgrade Details
R26	Metal Guardrail Details
R27	Concrete Median Barrier Under Kunia Separation Plan, Elevation And Sections
R28	Type "B" Median Barrier Upgrade Plan, Elevation And Sections
R29	Modified Median Barrier Plan, Elevation And Details
R30	Concrete Guardrail Partial Plan and Sections

ESTIMATED QUANTITIES 1

ITEM NO.	DESCRIPTION	UNIT	QUANTITIES
206.5000	Structural Excavation For Retaining Walls	Cu. Yd.	4,755 c.y.
206.7250	Structural Backfill For Retaining Walls	Cu. Yd.	2,815 c.y.
206.8300	Filter Material For Retaining Walls	Cu. Yd.	350 c.y.
503.1050	Concrete In Retaining Walls	Lump Sum	(1,611 c.y.)
513.1000	Type L1 CMU Noise Barrier	Sq. Yd.	318 s.y.
513.2000	Type L2 CMU Noise Barrier	Sq. Yd.	666 s.y.
513.3000	Type L3 CMU Noise Barrier	Sq. Yd.	9 s.y.
513.4000	Type T1 CMU Noise Barrier	Sq. Yd.	426 s.y.
513.5000	Type T2 CMU Noise Barrier	Sq. Yd.	114 s.y.
1 513.6000	Type "C" CMU Noise Barrier	Sq. Yd.	231 s.y.
602.0040	Reinforcing Steel	Lump Sum	(302,750 lbs.)
606.4180	Type "A" Median Barrier Upgrade - Glare Screen	Lin. Ft.	104 l.f.
606.4182	Type "B" Median Barrier Transition at Quadguard	Lin. Ft.	36 l.f.
606.4184	Type "C" Median Barrier Transition upgrade Under Kunia Separation	Lin. Ft.	32 l.f.
606.4186	Type "4G" Median Barrier	Lin. Ft.	49 l.f.
606.4190	Type "D" Median Barrier Transition Upgrade	Lin. Ft.	32 l.f.
606.4200	Type "4X" Median Barrier At Light Standard	Each	15 ea.

NOTE: See sht. #R20, Estimated Quantities for Overhead Sign Supports.
See sht. #R24, Estimated Quantities for End Post Type "A" Upgrade and bearing pad replacement .
See sht. #ADD. 133 S-1 for Estimated Quantities for crack repairs.
See sht. #ADD 133 S-3 for Estimated Quantities for expansion joint repairs.

DATE	REVISION
1 1/25/98	Added Item No. 513.6000 and notes to Est. Quantities. Rearranged and/or moved Location Plan, Symbol and Est. Quantities to allow more space for the additions. Revised Index To Drawings.

STATE OF HAWAII
DEPARTMENT OF TRANSPORTATION
HIGHWAYS DIVISION

KUNIA INTERCHANGE WALLS
INDEX TO DRAWINGS, ABBREVIATIONS
ESTIMATED QUANTITIES
RAMP "EH" AND "HE" - GENERAL NOTES, LOCATON PLAN
KUNIA INTERCHANGE IMPROVEMENTS
Project No IM-HI-1(219)

Scale: As Noted — Date: Nov. 1997

SHEET No. R1 OF 30 SHEETS

ADD. 110

FED. ROAD DIST. NO.	STATE	FED. AID PROJ. NO.	FISCAL YEAR	SHEET NO.	TOTAL SHEETS
HAWAII	HAW.	IM-H1-1(219)	1998	111	378

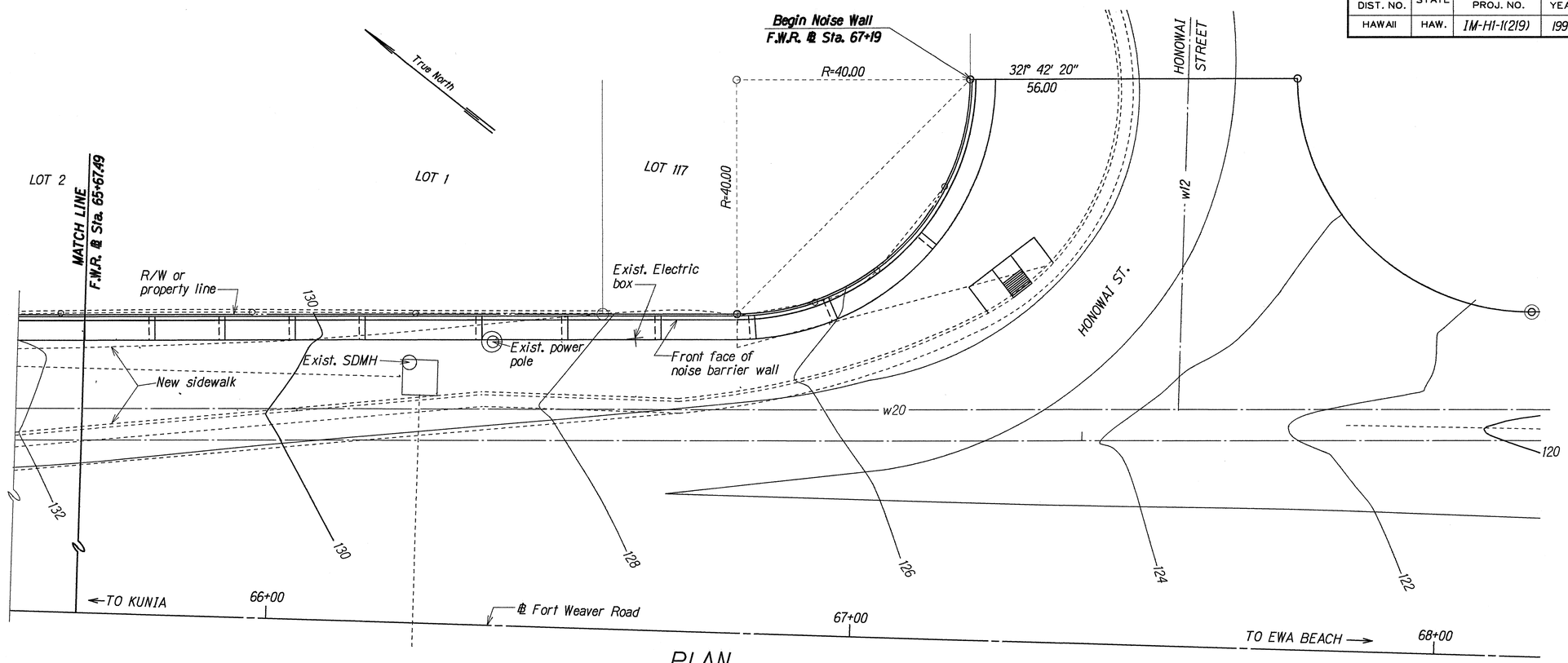

PLAN

Scale: 1" = 10'-0"

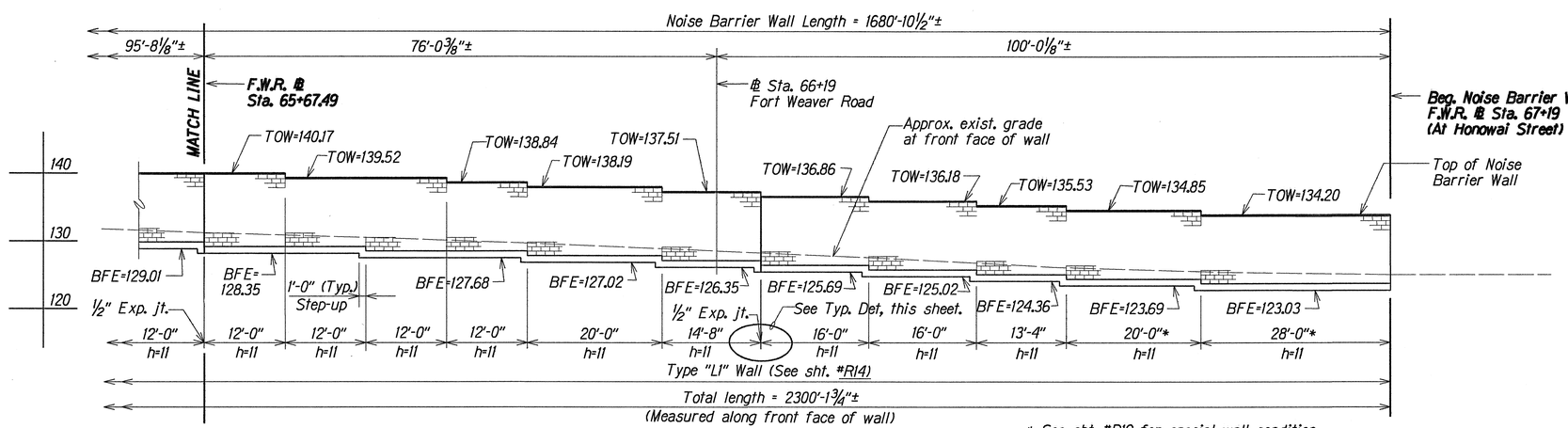

DEVELOPED ELEVATION

Scale: 1" = 10'-0"

* See sht. #R19 for special wall condition for subdivision name in wall.

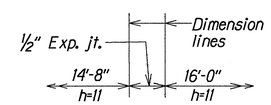

TYPICAL DETAIL

Not to Scale

ORIGINAL PLAN	SURVEY PLOTTED BY	DATE
	DRAWN BY LMA.	JUN 1997
	TRACED BY	JUN 1997
NOTE BOOK	DESIGNED BY JFU	JUN 1997
	QUANTITIES BY JFU	JUN 1997
No. 01/02	CHECKED BY DCO	JUN 1997

STATE OF HAWAII
DEPARTMENT OF TRANSPORTATION
HIGHWAYS DIVISION

KUNIA INTERCHANGE WALLS

RAMP "EH" - PLAN AND ELEVATION

FORT WEAVER ROAD @ STA. 65+67.49 TO 67+19

KUNIA INTERCHANGE IMPROVEMENTS

Project No IM-H1-1(219)

Scale: As Noted — Date: Nov. 1997

SHEET No. R2 OF 30 SHEETS

FED. ROAD DIST. NO.	STATE	FED. AID PROJ. NO.	FISCAL YEAR	SHEET NO.	TOTAL SHEETS
HAWAII	HAW.	IM-HI-1(219)	1998	112	378

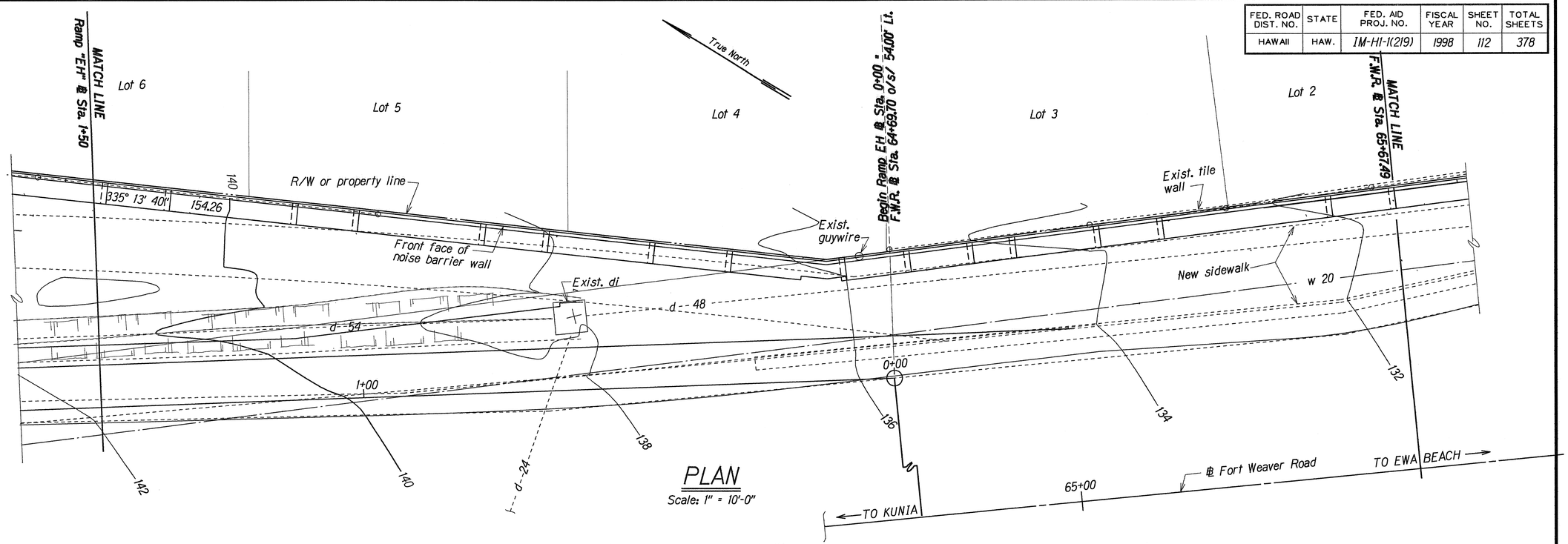

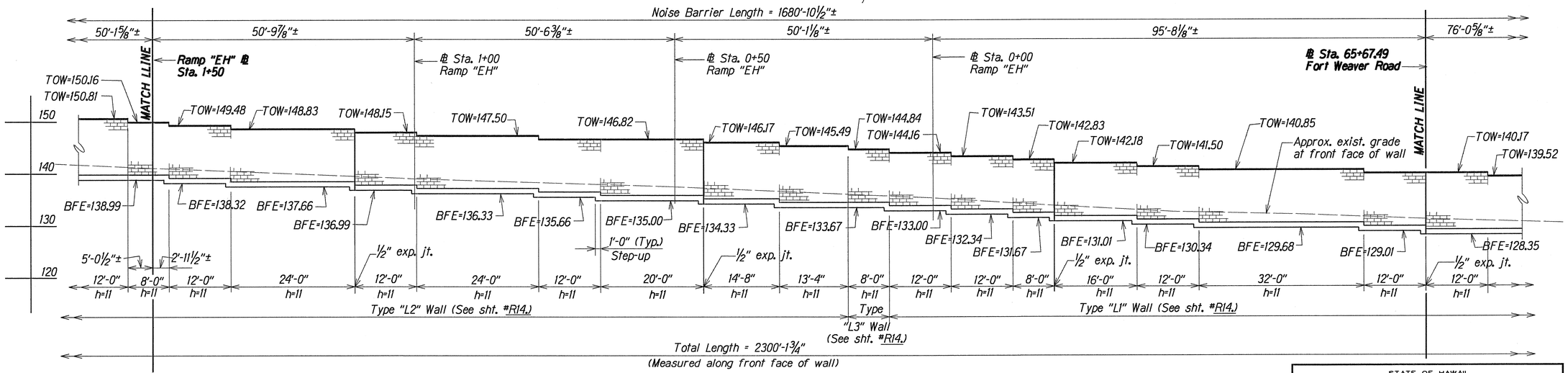

DEVELOPED ELEVATION

Scale: 1" = 10'-0"

ORIGINAL PLAN			DATE
	SURVEY PLOTTED BY	LMA	JUN. 1997
	DRAWN BY	• • •	• • •
	TRACED BY	JFU	JUN. 1997
NOTE BOOK	DESIGNED BY	JFU	JUN. 1997
	QUANTITIES BY	JFU	JUN. 1997
No. dh/vr 3	CHECKED BY	KOO	JUN. 1997

STATE OF HAWAII
DEPARTMENT OF TRANSPORTATION
HIGHWAYS DIVISION

KUNIA INTERCHANGE WALLS

RAMP "EH" - PLAN AND ELEVATION

FORT WEAVER ROAD @ STA. 65+67.49 TO RAMP "EH" @ STA. 1+50

KUNIA INTERCHANGE IMPROVEMENTS

Project No IM-HI-1(219)

Scale: As Noted — Date: Nov. 1997

SHEET No. R3 OF 30 SHEETS

FED. ROAD DIST. NO.	STATE	FED. AID PROJ. NO.	FISCAL YEAR	SHEET NO.	TOTAL SHEETS
HAWAII	HAW.	IM-H1-1(219)	1998	113	378

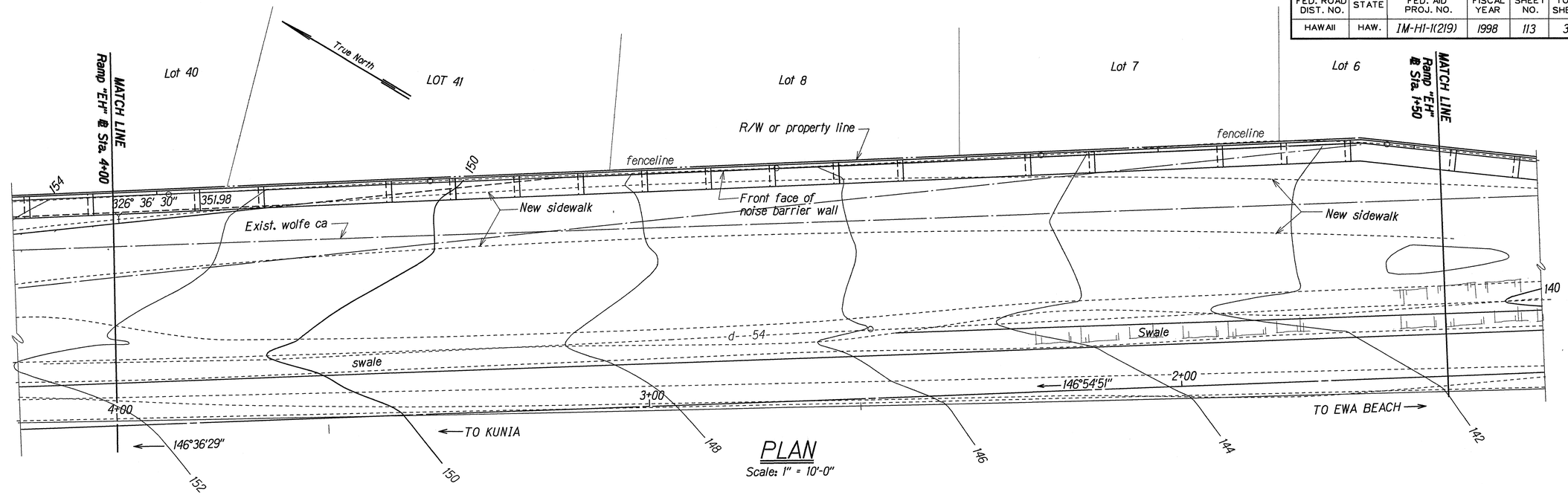

PLAN

Scale: 1" = 10'-0"

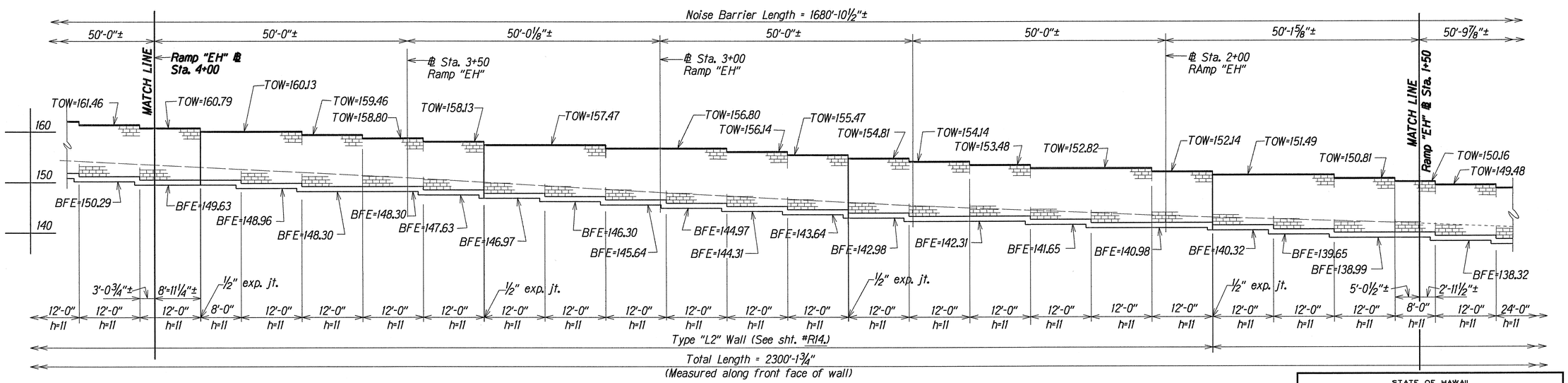

DEVELOPED ELEVATION

Scale: 1" = 10'-0"

ORIGINAL PLAN			
SURVEY PLOTTED BY	LMA	DATE	JUN. 1997
DRAWN BY			
TRACED BY	JFU		JUN. 1997
NOTE BOOK			
DESIGNED BY	JFU		JUN. 1997
QUANTITIES BY	JFU		JUN. 1997
No.	CHECKED BY	DCO	JUN. 1997

STATE OF HAWAII
DEPARTMENT OF TRANSPORTATION
HIGHWAYS DIVISION

KUNIA INTERCHANGE WALLS

RAMP "EH" - PLAN AND ELEVATION

RAMP "EH" @ STA. 1+50 TO 4+00

KUNIA INTERCHANGE IMPROVEMENTS

Project No IM-H1-1(219)

Scale: As Noted — Date: Nov. 1997

SHEET No. R4 OF 30 SHEETS

FED. ROAD DIST. NO.	STATE	FED. AID PROJ. NO.	FISCAL YEAR	SHEET NO.	TOTAL SHEETS
HAWAII	HAW.	IM-H1-1(219)	1998	114	378

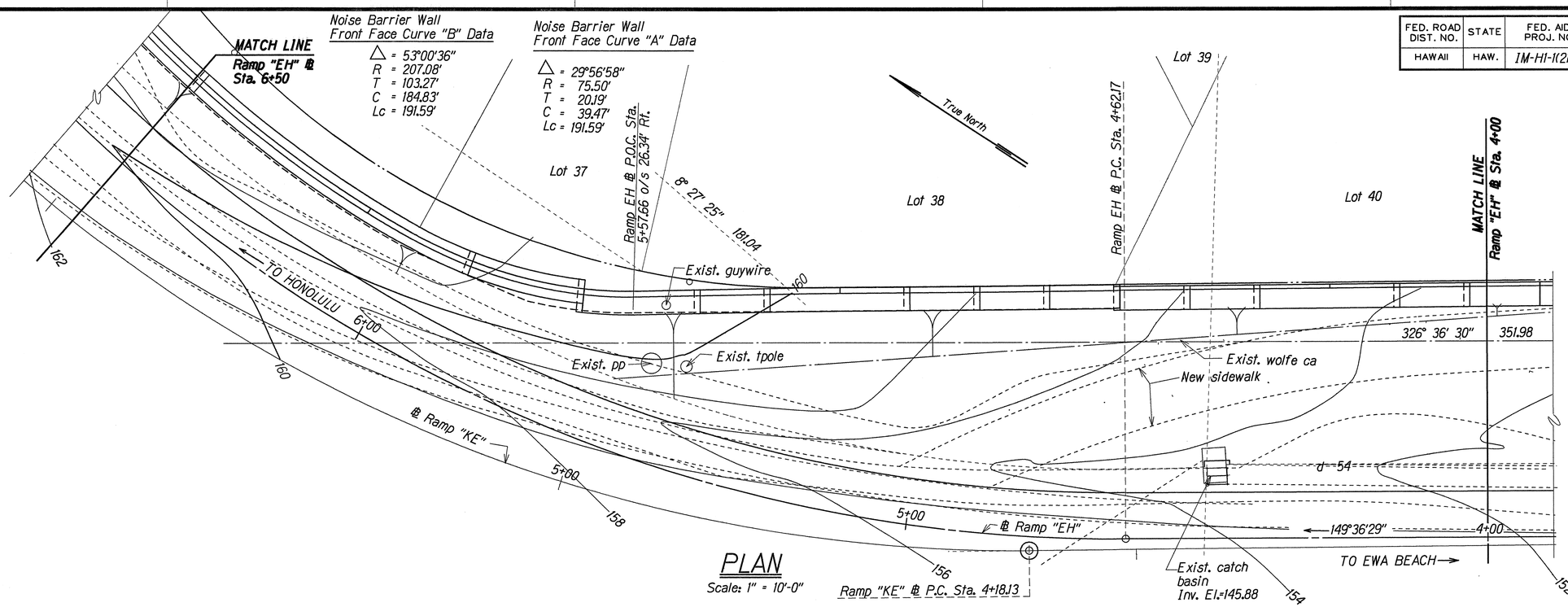

PLAN

Scale: 1" = 10'-0"

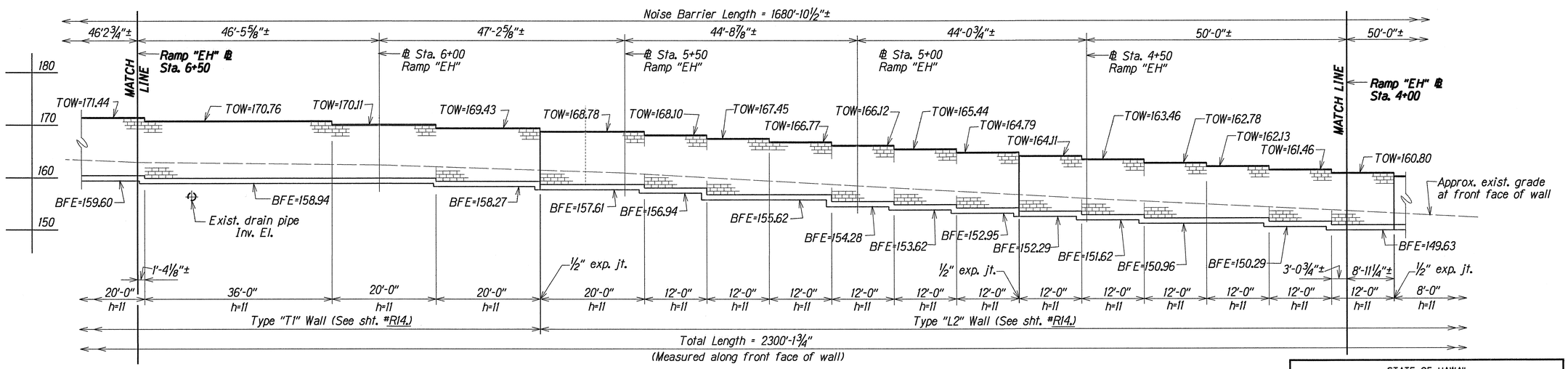

DEVELOPED ELEVATION

Scale: 1" = 10'-0"

ORIGINAL PLAN	SURVEY PLOTTED BY	LMA	JUN 1997
	DRAWN BY	• • • •	
	TRACED BY	JFU	JUN 1997
NOTE BOOK	DESIGNED BY	JFU	JUN 1997
	QUANTITIES BY	JFU	JUN 1997
No. dhh/5	CHECKED BY	DXO	JUN 1997

STATE OF HAWAII
DEPARTMENT OF TRANSPORTATION
HIGHWAYS DIVISION

KUNIA INTERCHANGE WALLS

RAMP "EH" - PLAN AND ELEVATION

RAMP "EH" @ STA. 4+00 TO 6+50

KUNIA INTERCHANGE IMPROVEMENTS

Project No IM-H1-1(219)

Scale: As Noted

Date: Nov. 1997

SHEET No. R5 OF 30 SHEETS

FED. ROAD DIST. NO.	STATE	FED. AID PROJ. NO.	FISCAL YEAR	SHEET NO.	TOTAL SHEETS
HAWAII	HAW.	IM-H1-1(219)	1998	115	378

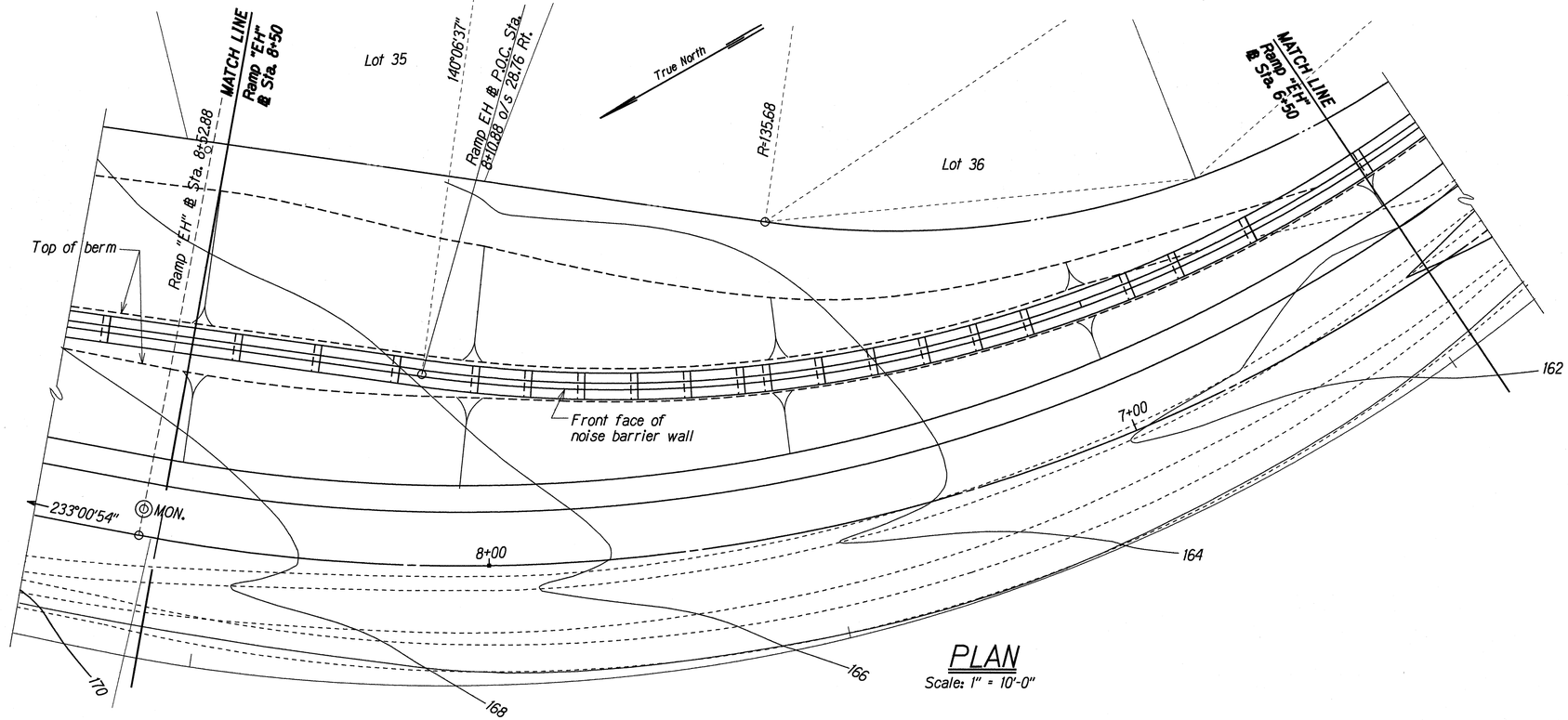

PLAN

Scale: 1" = 10'-0"

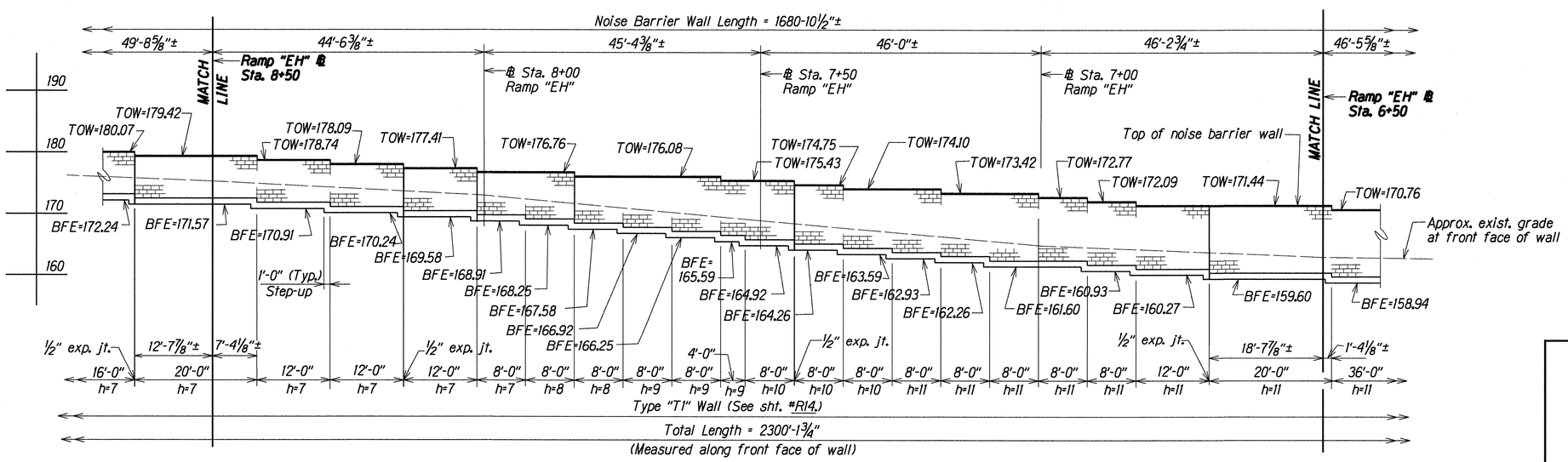

DEVELOPED ELEVATION

Scale: 1" = 10'-0"

ORIGINAL PLAN			
SURVEY PLOTTED BY	LMA	DATE	JUN. 1997
DRAWN BY			
TRACED BY	JFU		JUN. 1997
DESIGNED BY	JFU		JUN. 1997
NOTE BOOK			
QUANTITIES BY	JCO		JUN. 1997
CHECKED BY			
No.			

STATE OF HAWAII
DEPARTMENT OF TRANSPORTATION
HIGHWAYS DIVISION

KUNIA INTERCHANGE WALLS

RAMP "EH" - PLAN AND ELEVATION

RAMP "EH" @ STA. 6+50 TO 8+50

KUNIA INTERCHANGE IMPROVEMENTS

Project No IM-H1-1(219)

Scale: As Noted

Date: Nov. 1997

FED. ROAD DIST. NO.	STATE	FED. AID PROJ. NO.	FISCAL YEAR	SHEET NO.	TOTAL SHEETS
HAWAII	HAW.	IM-H1-1(219)	1998	116	378

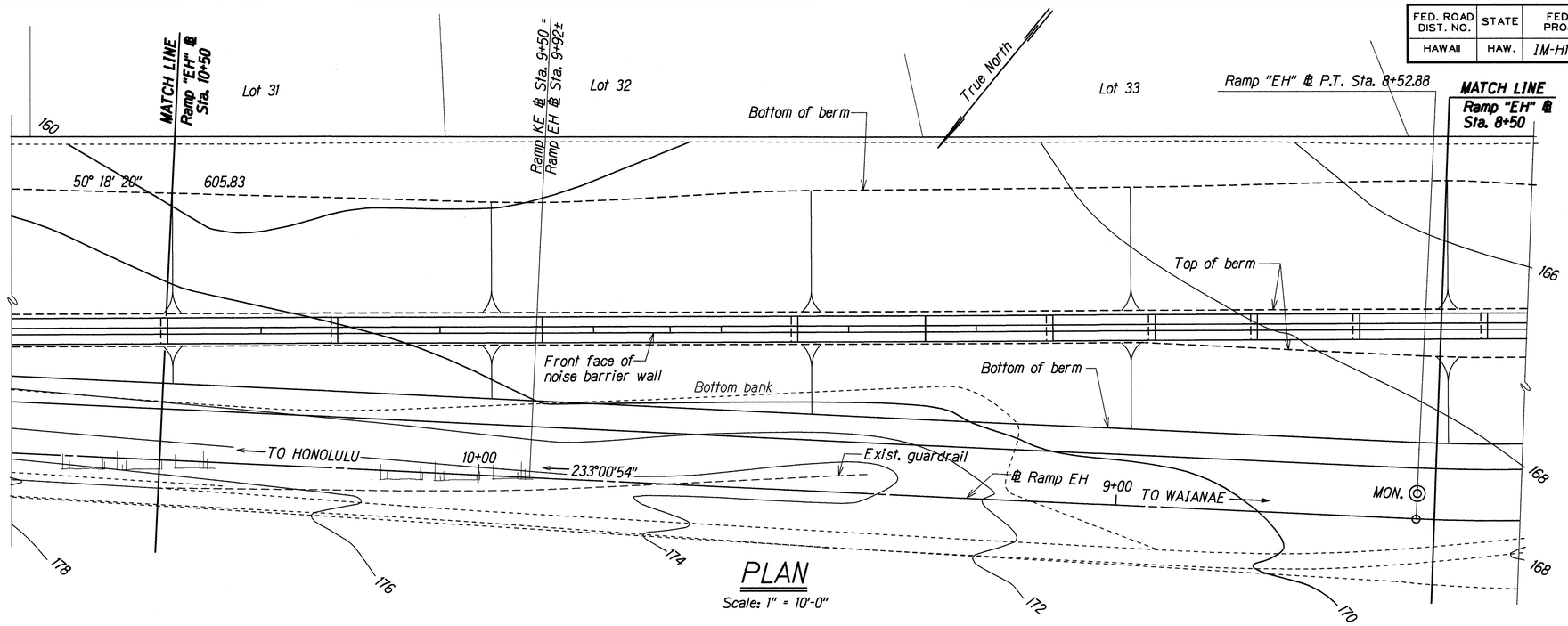

PLAN

Scale: 1" = 10'-0"

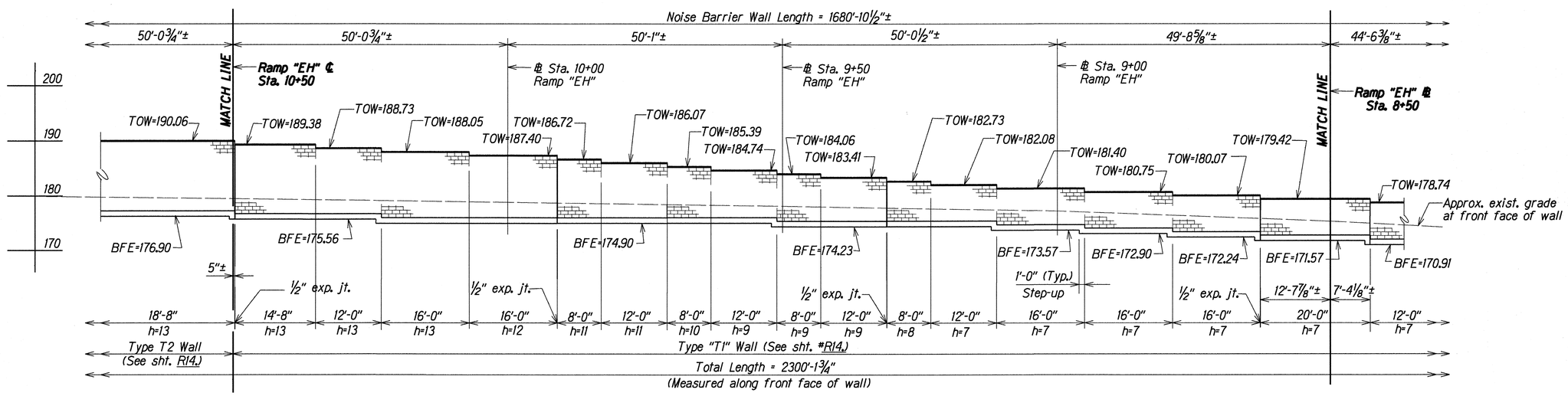

ELEVATION

Scale: 1" = 10'-0"

ORIGINAL PLAN		
SURVEY PLOTTED BY	LMA	JUN. 1997
DRAWN BY		
TRACED BY	JFU	JUN. 1997
NOTE BOOK		
DESIGNED BY	JFU	JUN. 1997
QUANTITIES BY		
CHECKED BY	DCO	JUN. 1997
No.		

STATE OF HAWAII
DEPARTMENT OF TRANSPORTATION
HIGHWAYS DIVISION

KUNIA INTERCHANGE WALLS

RAMP "EH" - PLAN AND ELEVATION

RAMP "EH" ℄ STA. 8+50 TO 10+50

KUNIA INTERCHANGE IMPROVEMENTS

Project No IM-H1-1(219)

Scale: As Noted — Date: Nov. 1997

SHEET No. R7 OF 30 SHEETS

FED. ROAD DIST. NO.	STATE	FED. AID PROJ. NO.	FISCAL YEAR	SHEET NO.	TOTAL SHEETS
HAWAII	HAW.	IM-H1-1(219)	1998	CO 117	378

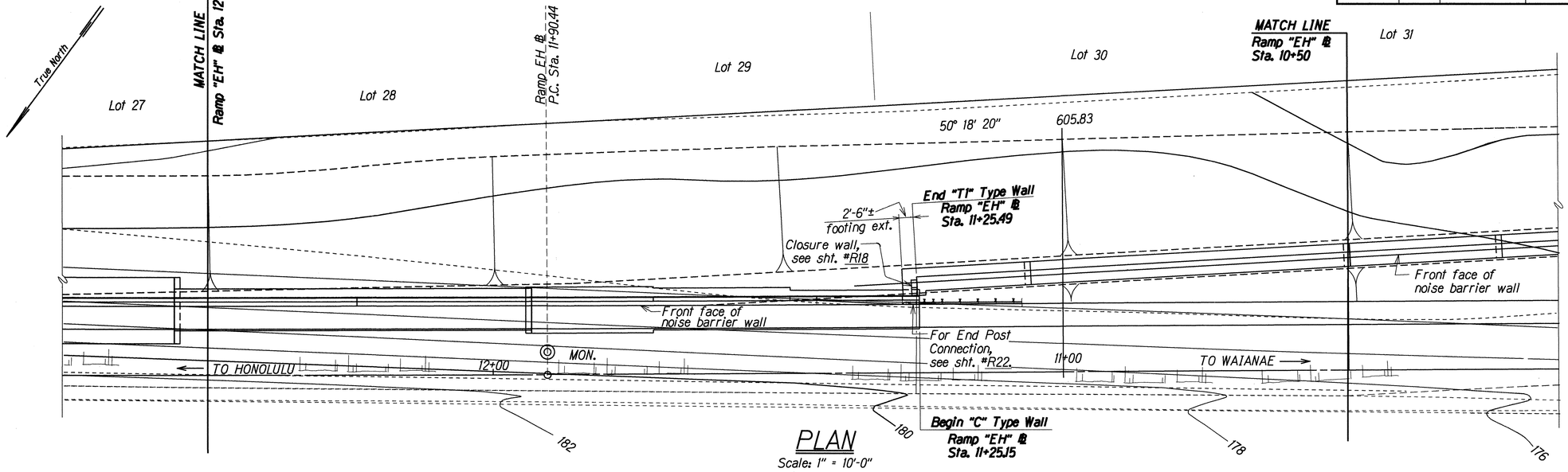

PLAN

Scale: 1" = 10'-0"

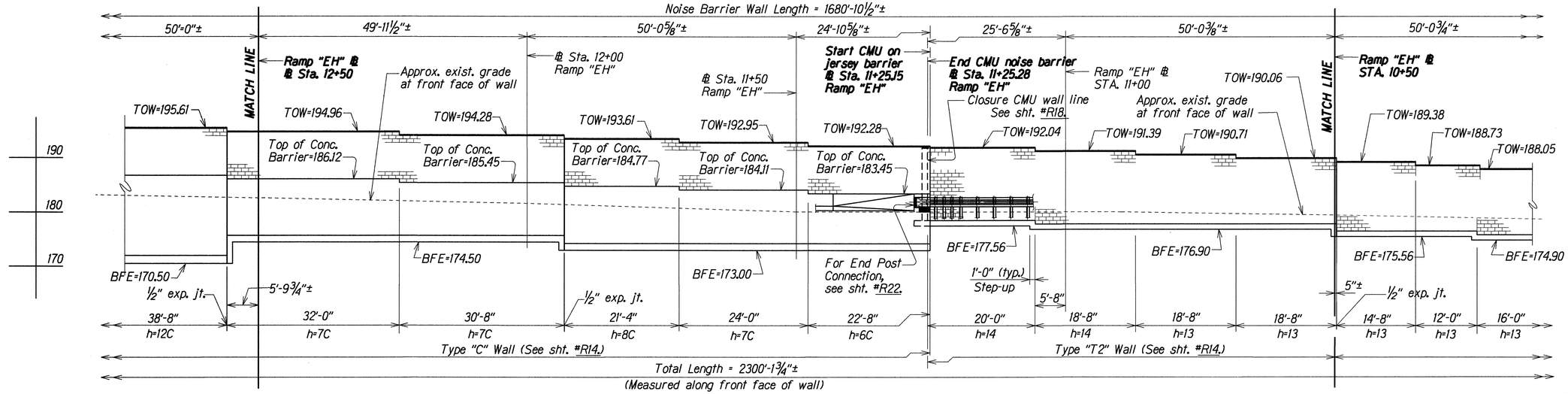

1 DEVELOPED ELEVATION

Scale: 1" = 10'-0"

ORIGINAL PLAN	SURVEY PLOTTED BY LMA, TKM DATE JUN 1997
	DRAWN BY
	TRACED BY JFU JUN 1997
NOTE BOOK	DESIGNED BY JFU JUN 1997
	QUANTITIES BY JFU JUN 1997
No.	CHECKED BY DCO JUN 1997

DATE	REVISION
1 3/9/99	Revised TOW El. and added Top of Concrete Barrier El.

STATE OF HAWAII
DEPARTMENT OF TRANSPORTATION
HIGHWAYS DIVISION

KUNIA INTERCHANGE WALLS

RAMP "EH" - PLAN AND ELEVATION
RAMP "EH" @ STA. 10+50 to 12+50

KUNIA INTERCHANGE IMPROVEMENTS
Project No IM-H1-1(219)

Scale: As Noted Date: Nov. 1997

SHEET No. R8 OF 30 SHEETS

C.O. 117

FED. ROAD DIST. NO.	STATE	FED. AID PROJ. NO.	FISCAL YEAR	SHEET NO.	TOTAL SHEETS
HAWAII	HAW.	IM-H1-1(219)	1998	CO 118	378

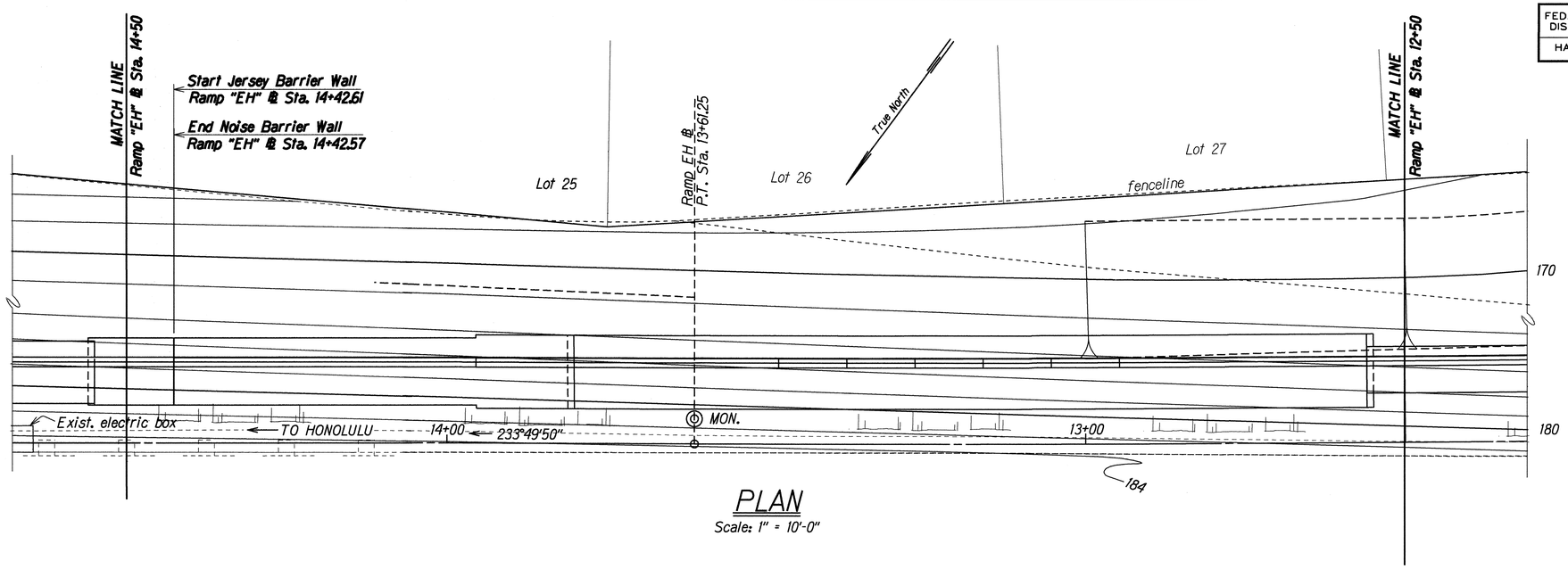

PLAN

Scale: 1" = 10'-0"

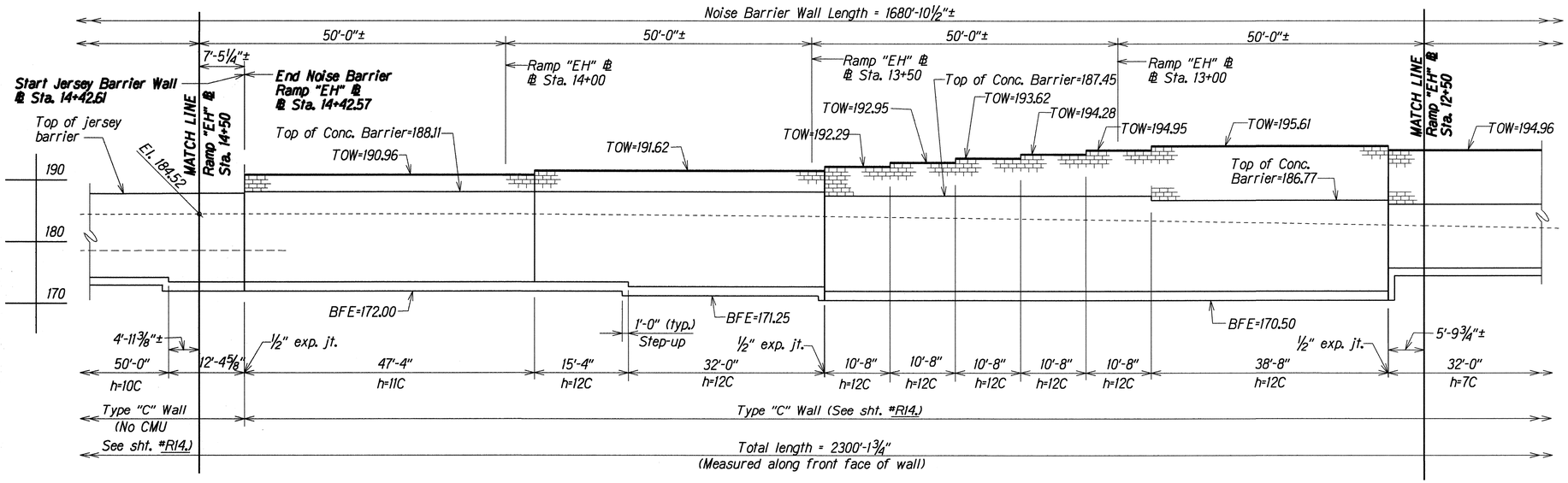

⚠1 ELEVATION

Scale: 1" = 10'-0"

DATE	REVISION
⚠1 3/9/99	Revised TOW El. and added Top of Concrete Barrier El.

STATE OF HAWAII
DEPARTMENT OF TRANSPORTATION
HIGHWAYS DIVISION

KUNIA INTERCHANGE WALLS
RAMP "EH" - PLAN AND ELEVATION
RAMP "EH" @ STA. 12+50 TO 14+50

KUNIA INTERCHANGE IMPROVEMENTS
Project No IM-H1-1(219)

Scale: As Noted — Date: Nov. 1997

SHEET No. R9 OF 30 SHEETS

ORIGINAL PLAN			
NOTE BOOK	SURVEY PLOTTED BY	WA, TKH	JUN 1997
	DRAWN BY		
	TRACED BY	JFH	JUN 1997
	DESIGNED BY	JFH	JUN 1997
	QUANTITIES BY		
	CHECKED BY	DGK	JUN 1997
No.			

C.O. 118

FED. ROAD DIST. NO.	STATE	FED. AID PROJ. NO.	FISCAL YEAR	SHEET NO.	TOTAL SHEETS
HAWAII	HAW.	IM-HI-1(219)	1998	119	378

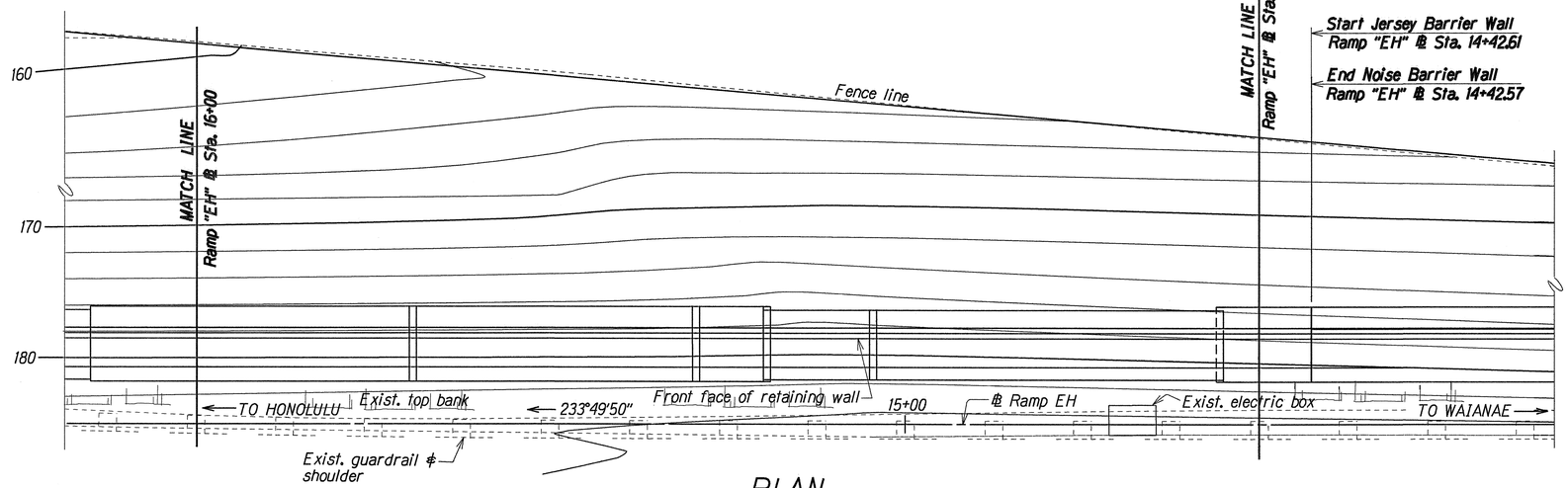

PLAN

Scale: 1" = 10'-0"

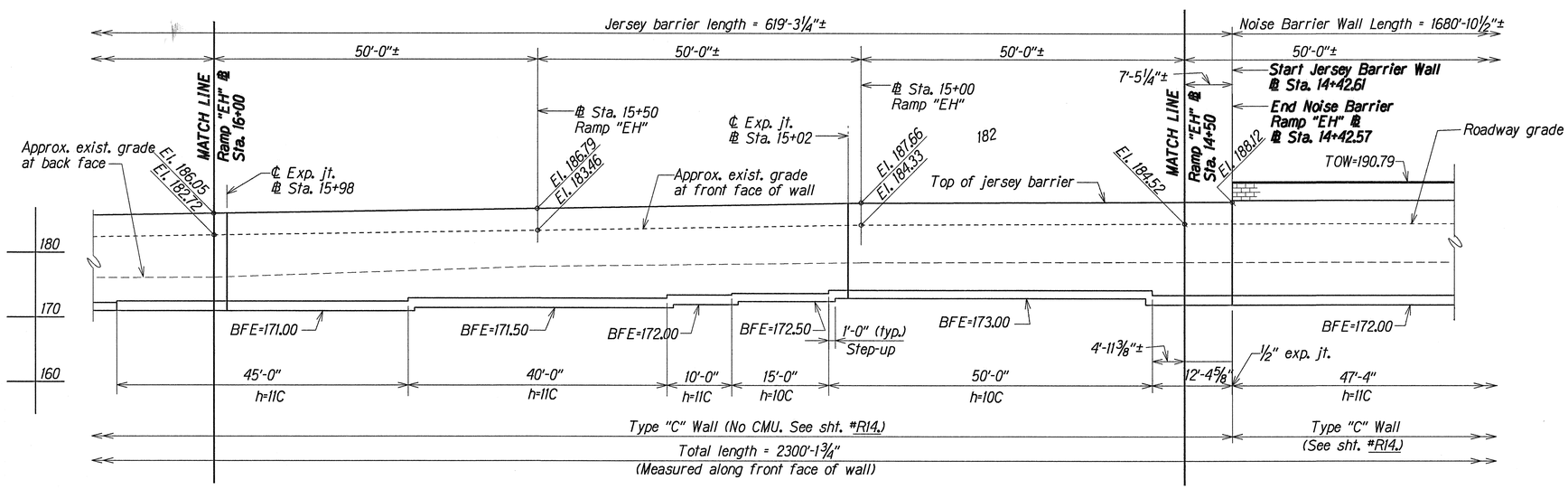

ELEVATION

Scale: 1" = 10'-0"

ORIGINAL PLAN	SURVEY PLOTTED BY TKM, LWA	DATE JUN 1997
	DRAWN BY	" "
	TRACED BY	" "
NOTE BOOK	DESIGNED BY DCO	JUN 1997
	QUANTITIES BY JFU	JUN 1997
No.	CHECKED BY DCO	JUN 1997

STATE OF HAWAII
DEPARTMENT OF TRANSPORTATION
HIGHWAYS DIVISION

KUNIA INTERCHANGE WALLS

RAMP "EH" - PLAN AND ELEVATION

RAMP "EH" ℄ STA. 14+06.02 TO 16+00

KUNIA INTERCHANGE IMPROVEMENTS

Project No IM-HI-1(219)

Scale: As Noted — Date: Nov. 1997

SHEET No. R10 OF 30 SHEETS

FED. ROAD DIST. NO.	STATE	FED. AID PROJ. NO.	FISCAL YEAR	SHEET NO.	TOTAL SHEETS
HAWAII	HAW.	IM-H1-1(219)	1998	120	378

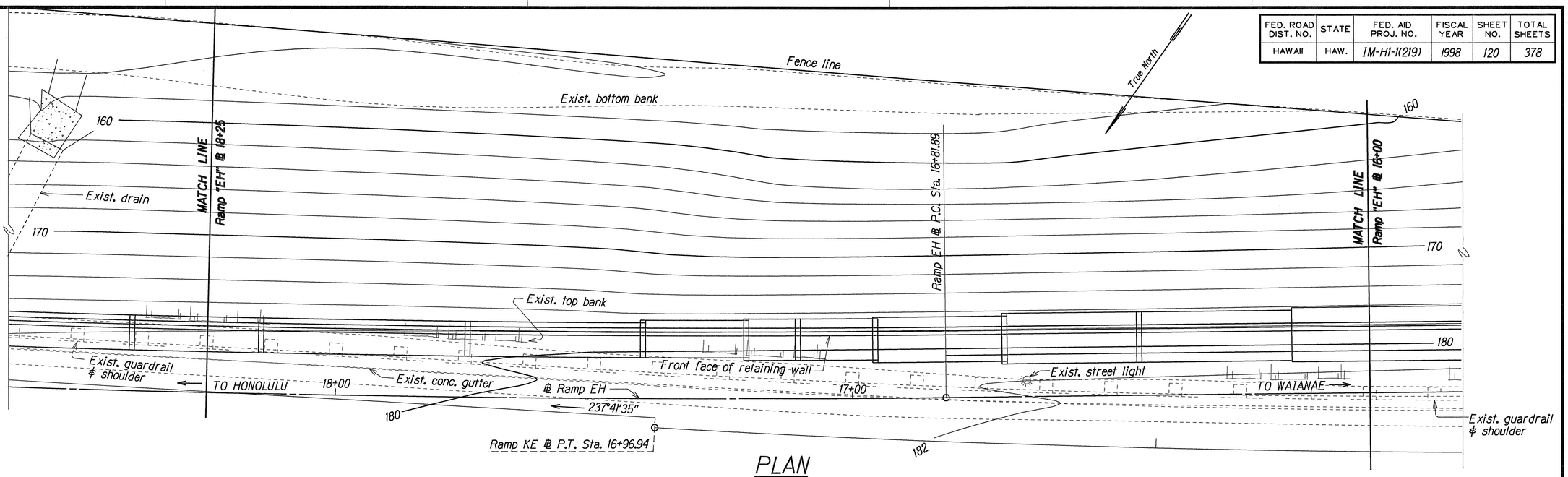

PLAN

Scale: 1" = 10'-0"

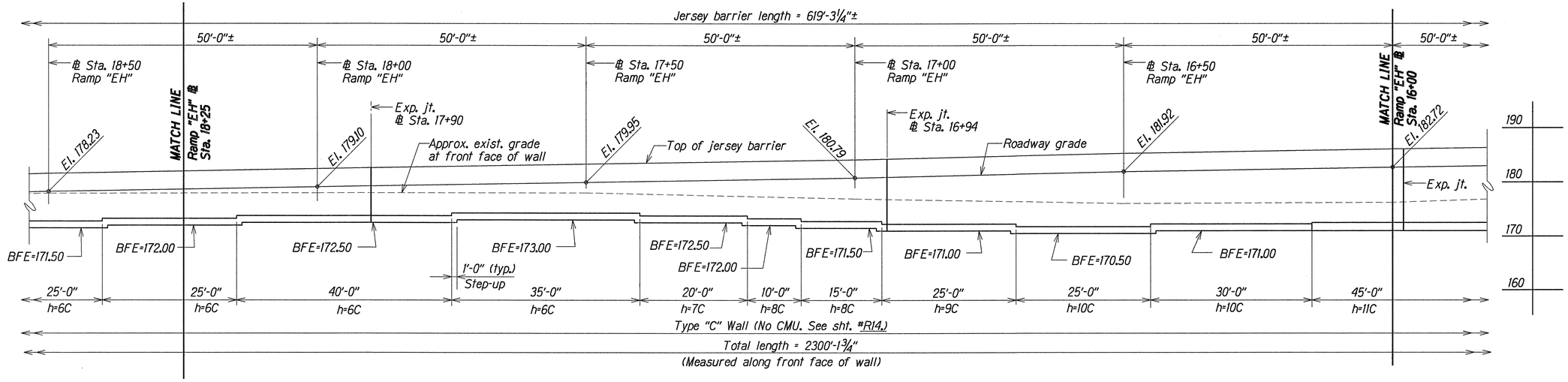

ELEVATION

Scale: 1" = 10'-0"

ORIGINAL PLAN	SURVEY PLOTTED BY	TKM, LMA	DATE SEP 1996
	DRAWN BY		
	TRACED BY		SEP 1996
NOTE BOOK	DESIGNED BY	DCO	SEP 1996
	QUANTITIES BY	JFU	SEP 1996
No.	CHECKED BY	DCO	SEP 1996

STATE OF HAWAII
DEPARTMENT OF TRANSPORTATION
HIGHWAYS DIVISION

KUNIA INTERCHANGE WALLS

RAMP "EH" - PLAN AND ELEVATION

RAMP "EH" @ STA. 16+00 TO 18+25

KUNIA INTERCHANGE IMPROVEMENTS

Project No IM-H1-1(219)

Scale: As Noted — Date: Nov. 1997

SHEET No. R11 OF 30 SHEETS

FED. ROAD DIST. NO.	STATE	FED. AID PROJ. NO.	FISCAL YEAR	SHEET NO.	TOTAL SHEETS
HAWAII	HAW.	IM-HI-1(219)	1998	121	378

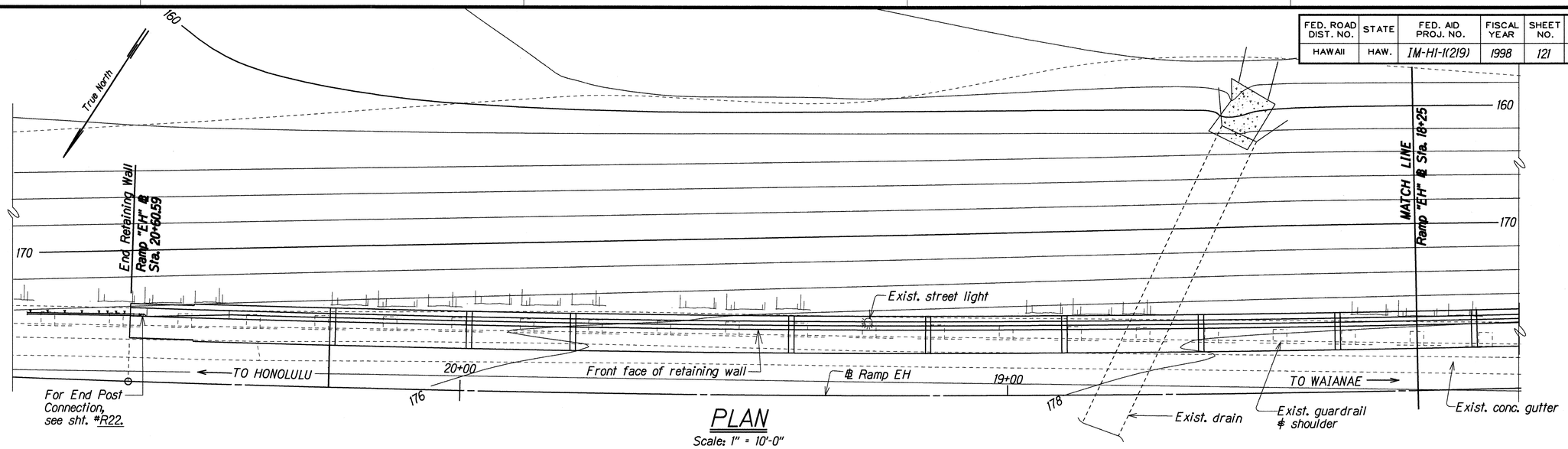

PLAN

Scale: 1" = 10'-0"

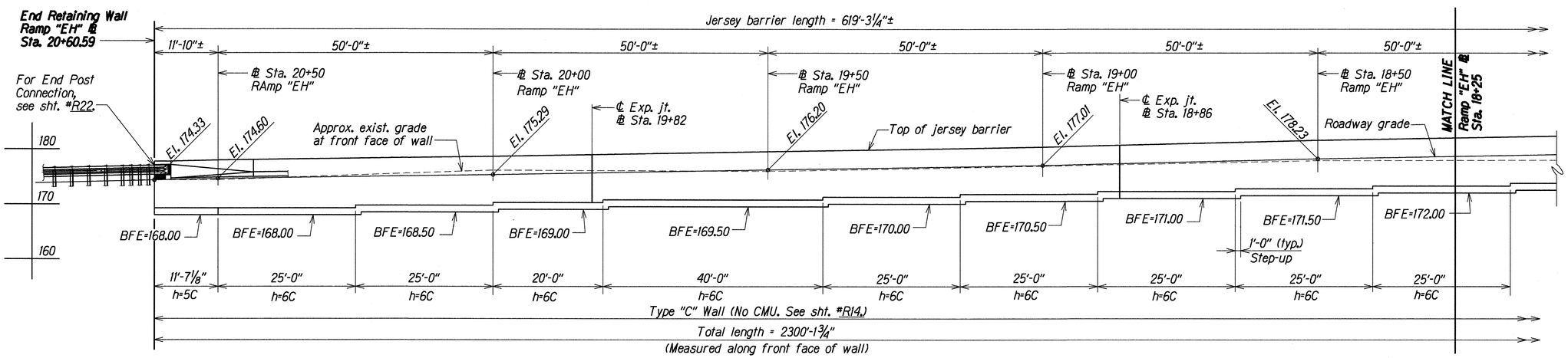

ELEVATION

Scale: 1" = 10'-0"

ORIGINAL PLAN		
NOTE BOOK	SURVEY PLOTTED BY	TKM, LMA — DATE JUN. 1997
	DRAWN BY	
	TRACED BY	JUN. 1997
	DESIGNED BY	DCO — JUN. 1997
	QUANTITIES BY	JFU — JUN. 1997
No.	CHECKED BY	DCO — JUN. 1997

STATE OF HAWAII
DEPARTMENT OF TRANSPORTATION
HIGHWAYS DIVISION

KUNIA INTERCHANGE WALLS

RAMP "EH" - PLAN AND ELEVATION

RAMP "EH" @ STA. 18+25 TO 20+60.59

KUNIA INTERCHANGE IMPROVEMENTS

Project No IM-HI-1(219)

Scale: As Noted — Date: Nov. 1997

SHEET No. R12 OF 30 SHEETS

FED. ROAD DIST. NO.	STATE	FED. AID PROJ. NO.	FISCAL YEAR	SHEET NO.	TOTAL SHEETS
HAWAII	HAW.	IM-HI-1(219)	1998	CO 122	378

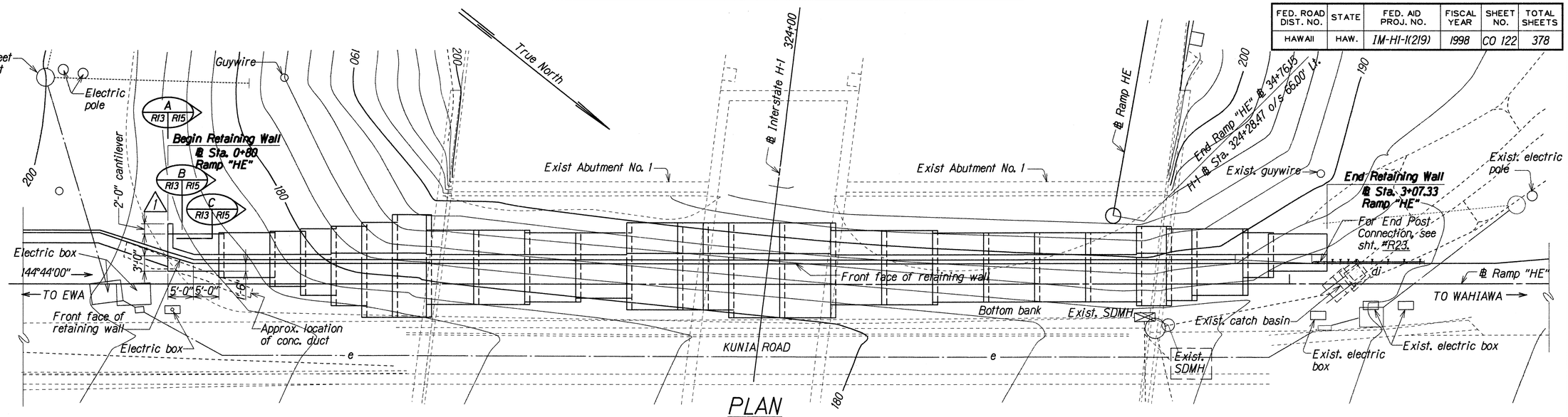

PLAN

Scale: 1" = 1'-0"

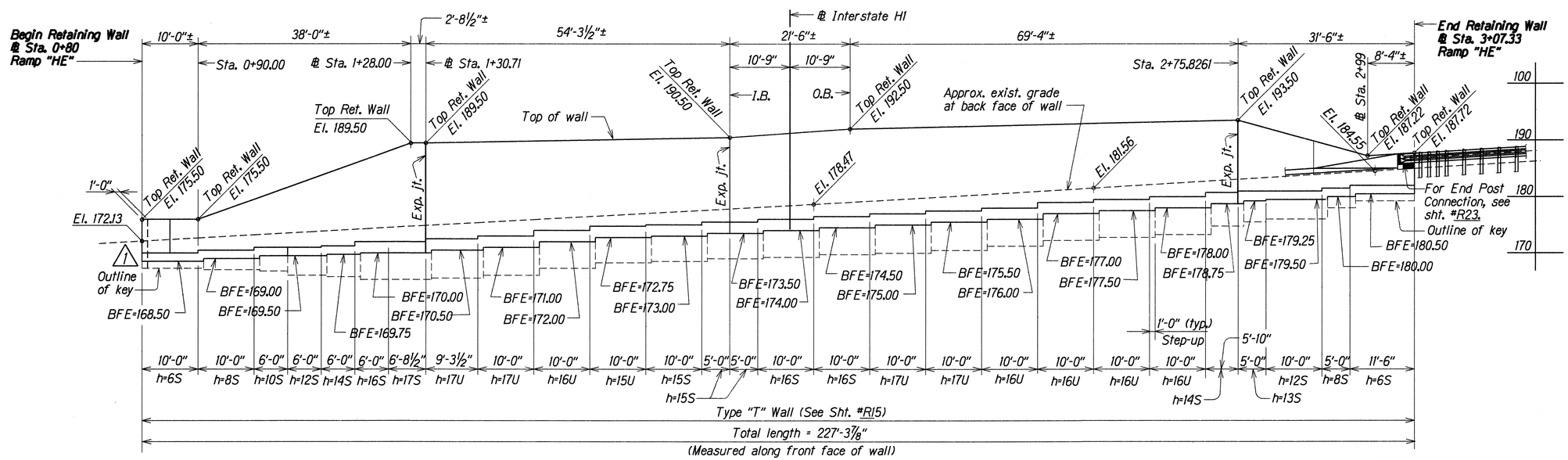

ELEVATION

Scale: 1" = 1'-0"

ORIGINAL PLAN	SURVEY PLOTTED BY	TKM, LMA	DATE JUN 1997
	DRAWN BY		
	TRACED BY	DCO	JUN 1997
NOTE BOOK	DESIGNED BY	JFU	JUN 1997
No.	QUANTITIES BY	DCO	JUN 1997
	CHECKED BY		

DATE	REVISION
1 4/1/99	Revised retaining wall at Sta. 0+80 (Ramp "HE") to avoid existing duct.

STATE OF HAWAII
DEPARTMENT OF TRANSPORTATION
HIGHWAYS DIVISION

KUNIA INTERCHANGE WALLS

RAMP "HE" - PLAN AND ELEVATION

RAMP "HE" ℄ STA. 0+80 TO 3+07.33

KUNIA INTERCHANGE IMPROVEMENTS

Project No IM-HI-1(219)

Scale: As Noted — Date: Nov. 1997

SHEET No. R13 OF 30 SHEETS

C.O. 122

FED. ROAD DIST. NO.	STATE	FED. AID PROJ. NO.	FISCAL YEAR	SHEET NO.	TOTAL SHEETS
HAWAII	HAW.	IM-HI-1(219)	1998	ADD. 123	378

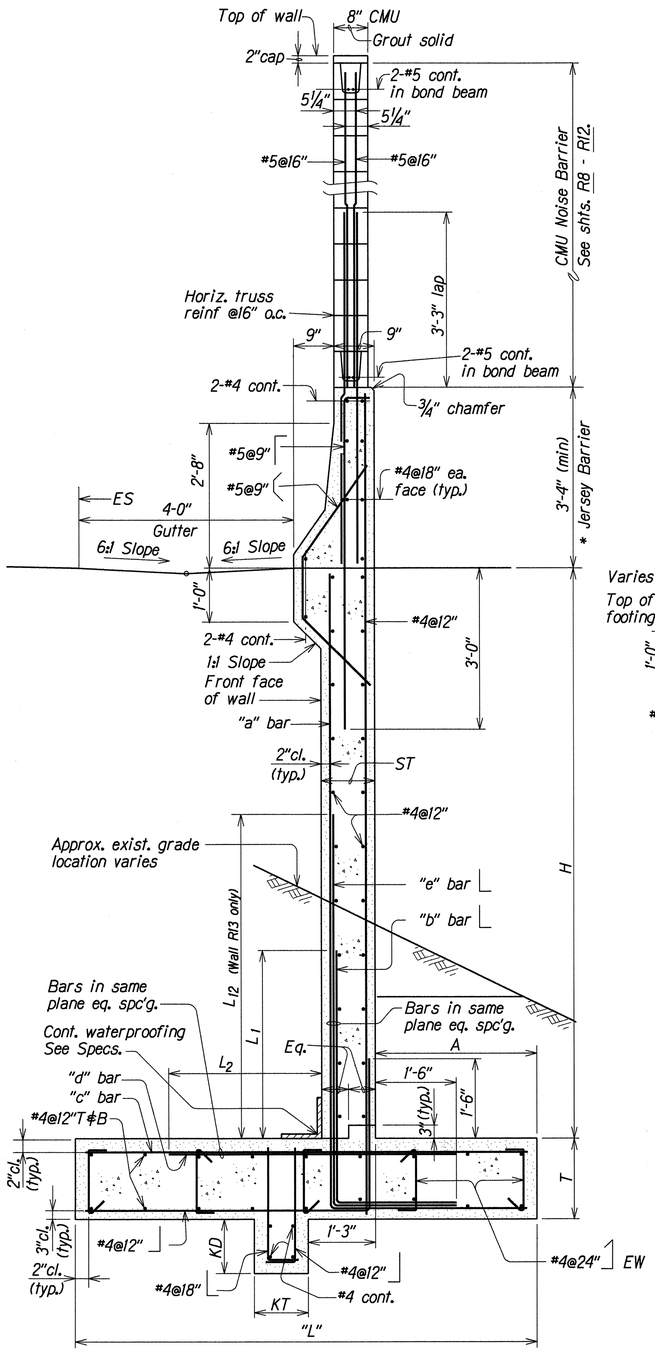

TYPICAL SECTION

(TYPE "C" WALL)

Scale: ¾"=1'-0"

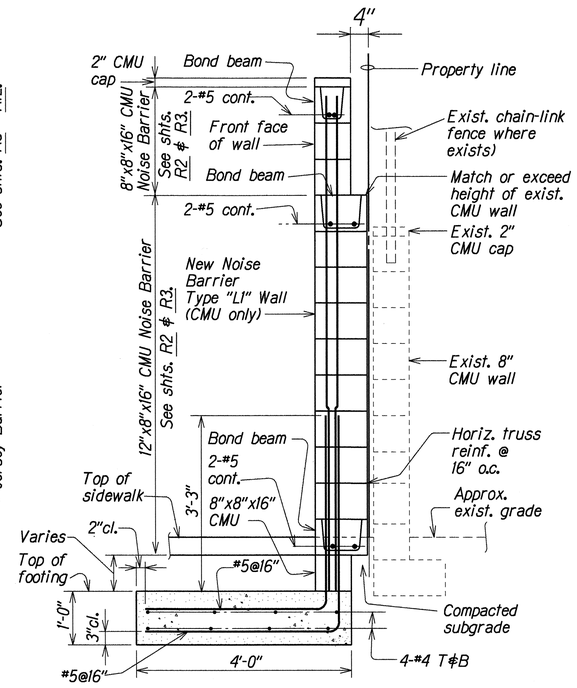

NOISE BARRIER WALL

(TYPE "L1")

Scale: ¾"=1'-0"

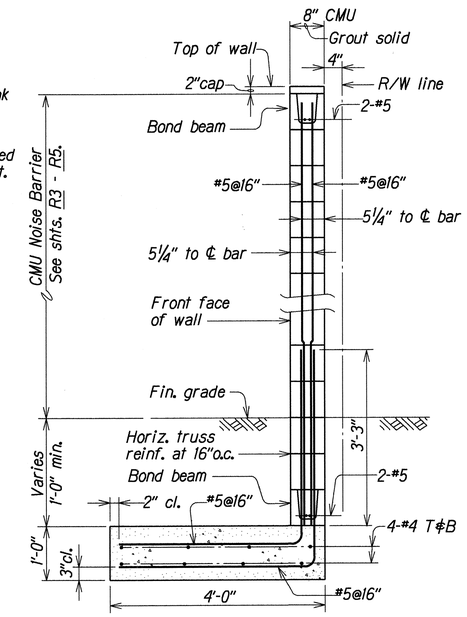

NOISE BARRIER WALL

(TYPE "L2")

Scale: ¾"=1'-0"

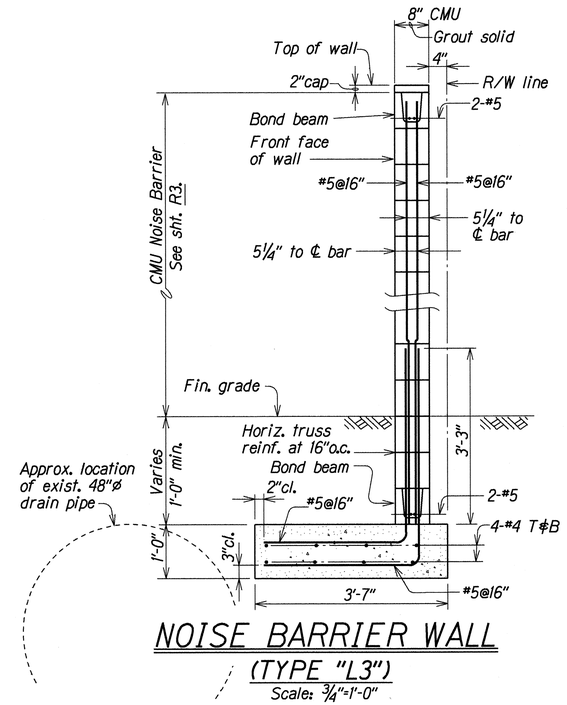

NOISE BARRIER WALL

(TYPE "L3")

Scale: ¾"=1'-0"

RAMP "EH" - TYPE "C" WALLS SCHEDULE OF DIMENSIONS & REINF. STEEL								
H / WALL TYPE	REGULAR WALLS							
	5C	6C	7C	8C	9C	10C	11C	12C
L	7'-3"	7'-9"	7'-9"	8'-3"	8'-9"	9'-9"	10'-6"	11'-6"
T	1'-3"	1'-3"	1'-3"	1'-3"	1'-3"	1'-3"	1'-6"	1'-6"
A	1'-0"	1'-3"	1'-6"	1'-9"	2'-0"	2'-6"	3'-0"	3'-6"
ST	1'-0"	1'-0"	1'-0"	1'-0"	1'-0"	1'-0"	1'-0"	1'-3"
KD	0'-6"	0'-6"	0'-6"	0'-9"	1'-0"	1'-0"	1'-3"	1'-6"
KT	1'-0"	1'-0"	1'-0"	1'-0"	1'-0"	1'-0"	1'-0"	1'-0"
"a" bar	#5@9"	#5@9"	#5@8"	#5@12"	#5@10"	#6@12"	#6@9"	#6@10"
"b" bar	--	--	--	#5@12"	#5@10"	#6@12"	#6@9"	#6@10"
"e" bar	--	--	--	--	--	--	--	--
"c" bar	#5@12"	#5@12"	#5@12"	#6@12"	#6@10"	#6@10"	#5@12"	#5@12"
"d" bar	--	--	--	--	--	--	#5@12"	#5@12"
L_1	--	--	--	5'-3"	4'-9"	4'-3"	3'-6"	4'-0"
L_{12}	--	--	--	--	--	--	--	--
L_2	--	--	--	--	--	--	4'-0"	4'-3"

All reinforcing steel for walls shall be Grade 60.

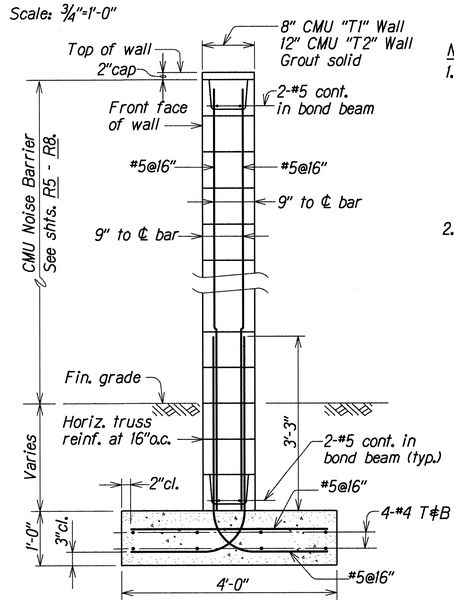

NOISE BARRIER WALL

(TYPE "T1" OR "T2")

Scale: ¾"=1'-0"

NOTE: 1

1. For Type "C" Walls,
   a. Concrete for jersey barrier, wall below jersey barrier and foundation shall be incidental to Item No. 503.1050 - Concrete for Retaining Walls and will not be paid for separately.
   b. Reinforcing for jersey barrier, wall below jersey barrier and foundation shall be incidental for Item No. 602.0040 - Reinforcing Steel and will not be paid for separately.
2. For CMU Noise Barrier Walls (Types L1, L2, L3, T1, T2)
   a. Concrete for foundation shall be incidental to Item No. 503.1050 - Concrete for Retaining Walls and will not be paid for separately.
   b. Reinforcing for foundation shall be incidental to Item No. 602.0040 - Reinforcng Steel and will not be paid for separately.

DATE	REVISION
1 1/25/98	Revised note.

STATE OF HAWAII
DEPARTMENT OF TRANSPORTATION
HIGHWAYS DIVISION

KUNIA INTERCHANGE WALLS

RAMP "EH"-TYPE "C","T1", "L1", "L2" & "L3" TYPICAL SECTIONS AND SCHEDULE OF DIMENSIONS AND REINFORCING STEEL

KUNIA INTERCHANGE IMPROVEMENTS
Project No IM-HI-1(219)

Scale: As Noted — Date: Nov. 1997

ORIGINAL PLAN	SURVEY PLOTTED BY	TKM	JUN. 1997
	DRAWN BY		JUN. 1997
NOTE BOOK	TRACED BY	JFU	JUN. 1997
	DESIGNED BY	JFU	JUN. 1997
No.	QUANTITIES BY	JFU	JUN. 1997
	CHECKED BY		

SHEET No. R14 OF 30 SHEETS

ADD.123

FED. ROAD DIST. NO.	STATE	FED. AID PROJ. NO.	FISCAL YEAR	SHEET NO.	TOTAL SHEETS
HAWAII	HAW.	IM-HI-1(219)	1998	CO 124	378

RAMP "HE" - TYPE "T" WALLS
SCHEDULE OF DIMENSIONS AND REINFORCING STEEL

WALL TYPE	6S	8S	10S	12S	13S	14S	15S	16S	17S	15U	16U	17U
L	7'-3"	8'-9"	10'-9"	13'-0"	14'-0"	15'-6"	17'-0"	18'-6"	20'-0"	12'-9"	13'-6"	14'-6"
T	1'-6"	1'-6"	1'-6"	1'-6"	1'-9"	1'-9"	2'-0"	2'-0"	2'-0"	1'-9"	1'-9"	1'-9"
A	4'-0"	4'-3"	4'-6"	5'-0"	5'-0"	5'-3"	6'-0"	6'-0"	7'-6"	4'-3"	4'-3"	4'-9"
ST	1'-0"	1'-0"	1'-0"	1'-0"	1'-0"	1'-3"	1'-3"	1'-3"	1'-3"	1'-0"	1'-0"	1'-0"
KD	1'-3"	2'-0"	2'-9"	3'-6"	3'-9"	4'-0"	4'-6"	4'-9"	5'-0"	2'-3"	2'-9"	3'-0"
KT	1'-0"	1'-0"	1'-0"	1'-0"	1'-3"	1'-3"	1'-3"	1'-3"	1'-3"	1'-0"	1'-0"	1'-0"
"a" bar	#5@12"	#5@12"	#5@12"	#6@12"	#6@10"	#7@12"	#7@10"	#7@12"	#7@12"	#6@10"	#7@12"	#7@10"
"b" bar	--	--	#5@12"	#6@12"	#6@10"	#7@12"	#7@10"	#7@12"	#7@12"	#6@10"	#7@12"	#7@10"
"c" bar	--	--	--	--	--	--	--	#7@12"	#7@12"	--	--	--
"d" bar	#5@12"	#5@12"	#6@12"	#6@12"	#7@12"	#7@12"	#6@12"	#6@12"	#7@12"	#6@12"	#6@12"	#6@10"
"e" bar	--	--	--	#6@12"	--	--	#6@12"	#6@12"	#7@12"	--	--	--
"f" bar	#5@12"	#5@12"	#6@12"	#6@8"	#6@8"	#7@9"	#7@9"	#7@9"	#7@9"	#5@12"	#6@12"	#6@10"
"g" bar	#5@12"	#5@12"	#5@12"	#5@12"	#6@12"	#6@12"	#6@12"	#6@12"	#6@12"	#6@12"	#6@12"	#6@12"
L_1	--	--	5'-0"	6'-0"	6'-6"	6'-0"	6'-6"	8'-0"	9'-0"	6'-6"	7'-6"	7'-6"
L_{1A}	--	--	3'-0"	3'-9"	4'-0"	4'-6"	4'-6"	6'-6"	6'-6"	3'-0"	3'-6"	3'-6"
L_2	--	--	--	--	--	--	--	6'-6"	7'-6"	--	--	--
L_{2A}	--	--	--	--	--	--	--	4'-6"	5'-0"	--	--	--
L_3	--	--	--	2'-6"	--	--	4'-0"	4'-0"	4'-6"	--	--	--

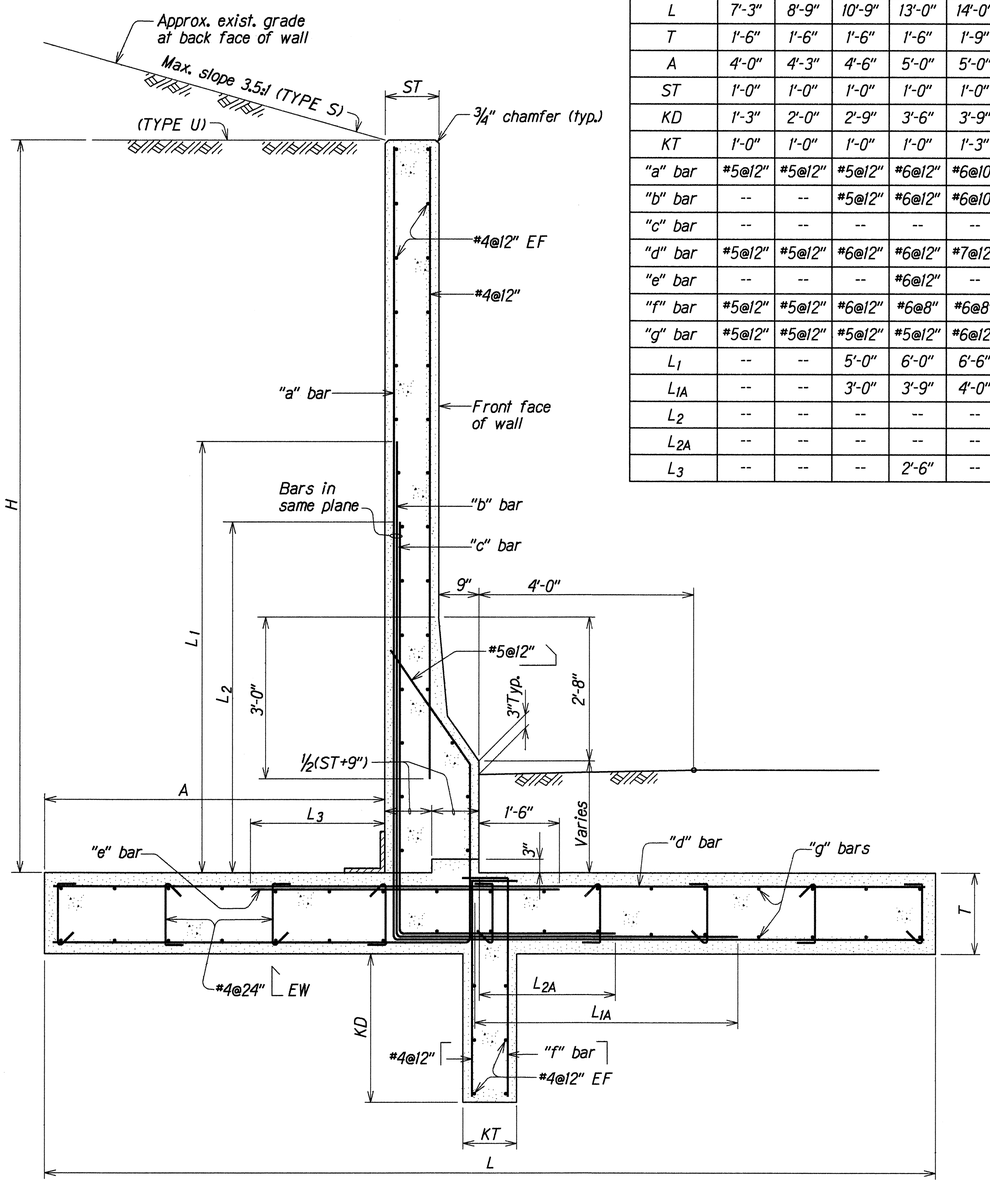

1 TYPICAL SECTION
(AT RAMP "HE")
Scale: 3/4"=1'-0"

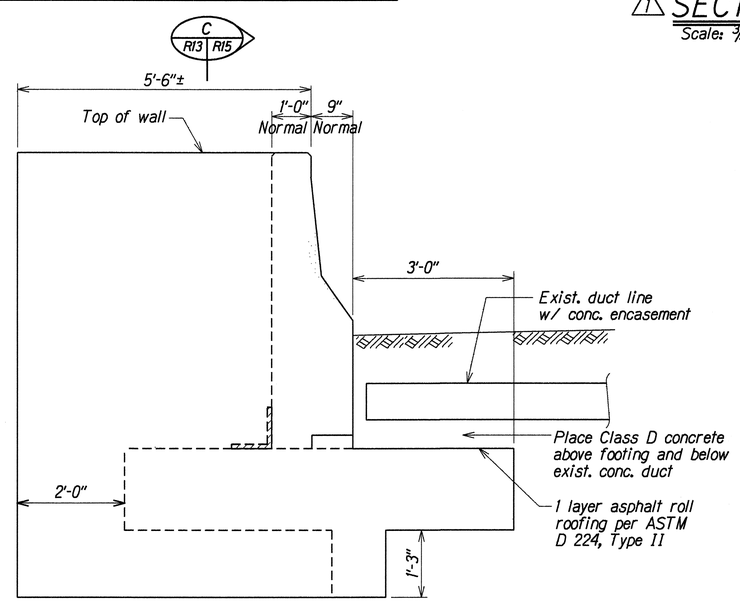

1 ELEVATION
Scale: 3/4" = 1'-0"
A
R13 R15

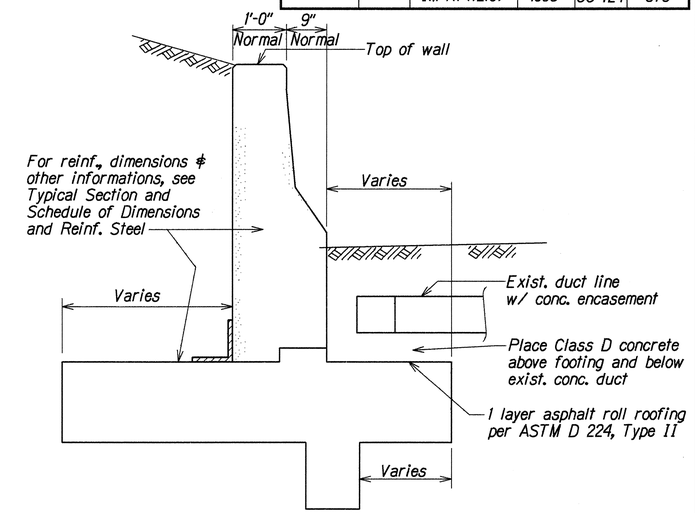

1 SECTION
Scale: 3/4" = 1'-0"
B
R13 R15

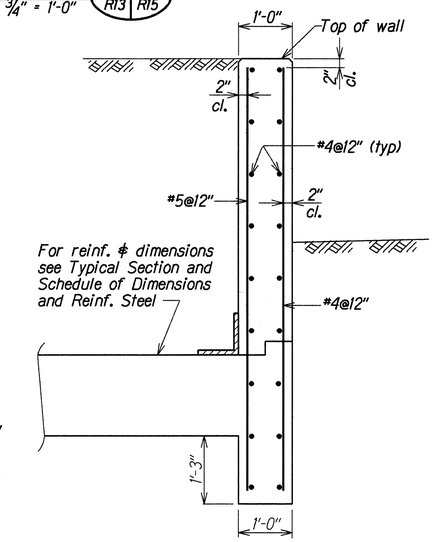

1 SECTION
Scale: 3/4" = 1'-0"
C
R13 R15
R15

ORIGINAL PLAN		
SURVEY PLOTTED BY	TKM	DATE JUN 1997
DRAWN BY	"	" JUN 1997
TRACED BY	DCO	" JUN 1997
DESIGNED BY	JF	" JUN 1997
QUANTITIES BY	"	" JUN 1997
CHECKED BY	DCO	" JUN 1997
NOTE BOOK		
No.		

DATE	REVISION
1 4/1/99	Added sections and elevation for Ramp "HE" revision. Moved drawing and schedule to accomodate addition.

STATE OF HAWAII
DEPARTMENT OF TRANSPORTATION
HIGHWAYS DIVISION

KUNIA INTERCHANGE WALLS
RAMP "HE" - TYPE "T" WALL TYPICAL SECTION
SCHEDULE OF DIMENSIONS AND REINFORCING STEEL
KUNIA INTERCHANGE IMPROVEMENTS
Scale: As Noted Project No IM-HI-1(219) Date: Nov. 1997

SHEET No. R15 OF 30 SHEETS

C.O. 124

FED. ROAD DIST. NO.	STATE	FED. AID PROJ. NO.	FISCAL YEAR	SHEET NO.	TOTAL SHEETS
HAWAII	HAW.	IM-HI-1(219)	1998	125	378

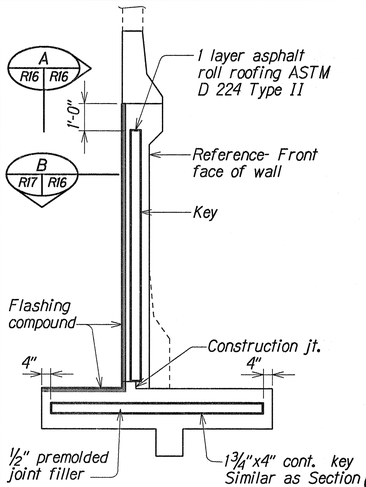

JOINT ELEVATION

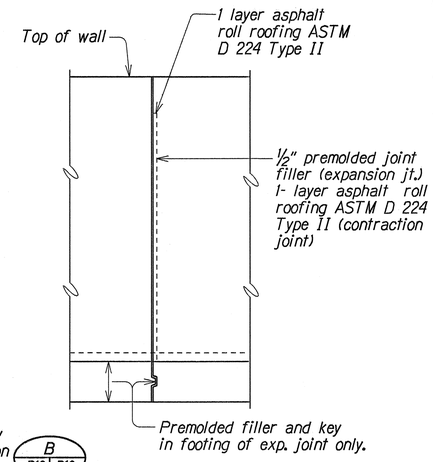

SECTION A R16 R16

NOTE

1. Spacing of joints
   Expansion = 96'-0" max.
   Contraction = 32'-0" max.
2. For alternate contraction joint and control joint details - see Standard Details, sht. "B-01".
3. Expansion joint material shall be incidental to concrete.

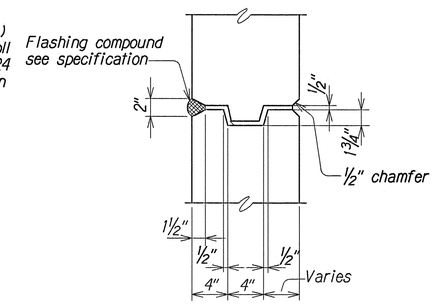

SECTION B R16 R16

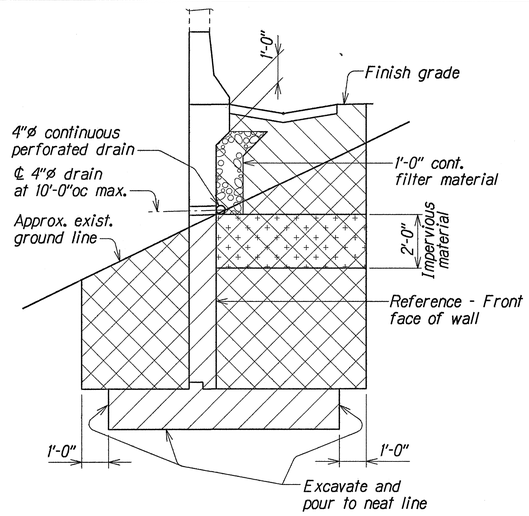

AT "C" OR "T" WALLS

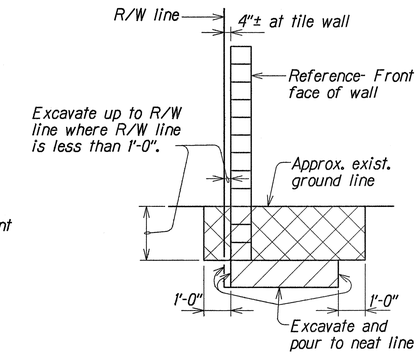

AT "L" WALLS

TYPICAL EXPANSION JOINT DETAILS

Not to Scale

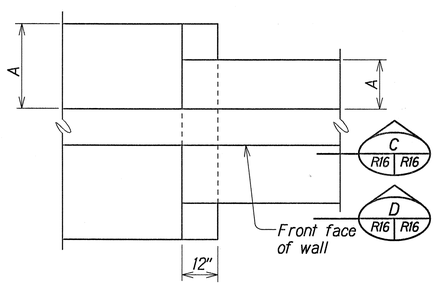

PLAN

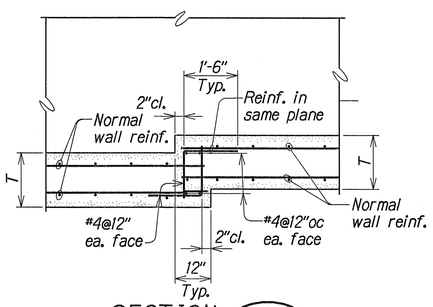

SECTION C R16 R16

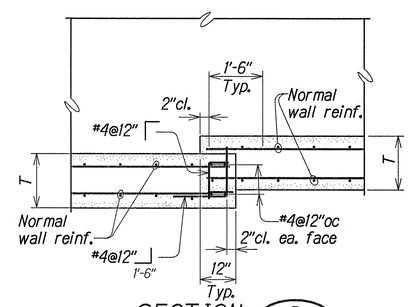

SECTION D R16 R16

AT CONTINUOUS FOOTING

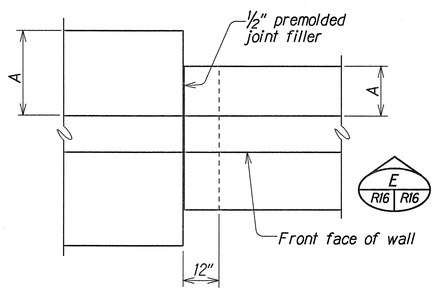

PLAN

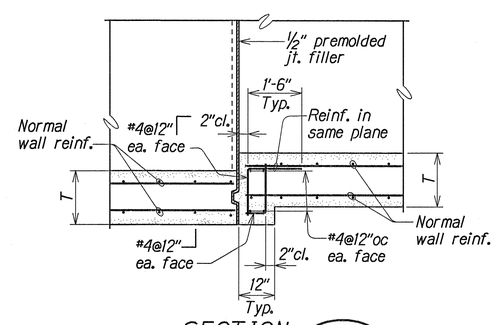

SECTION E R16 R16

AT EXPANSION JOINT

TYPICAL FOOTING STEP-UP DETAILS

Not to Scale

NOTES:

1. Hatched area shown thus denote limits of structure backfill.
2. Hatched area shown thus denote limits of structure excavation payline.
3. Impervious material as selected by the Engineer shall be incidental to structure excavation.
4. When "Y" is 2'-0" or less, all backfill below PVC pipe level shall be impervious material.
5. The subgrade upon which filter material is to be placed shall be made as impervious as possible by pneumatic tamping.

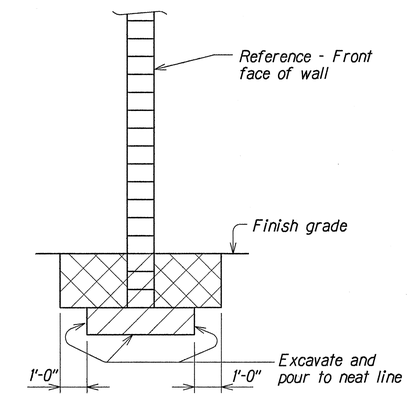

AT "T1" OR "T2" WALLS

TYPICAL EXCAVATION AND BACKFILL PAY LIMITS

Not to Scale

ORIGINAL PLAN		DATE
	SURVEY PLOTTED BY TKM	SEP 1996
	DRAWN BY •	•
	TRACED BY •	•
NOTE BOOK	DESIGNED BY XXX	SEP 1996
	QUANTITIES BY JEI	SEP 1996
N.	CHECKED BY DOO	SEP 1996

STATE OF HAWAII
DEPARTMENT OF TRANSPORTATION
HIGHWAYS DIVISION

KUNIA INTERCHANGE WALLS
EXPANSION JOINT, FOOTING STEP-UP DETAILS
TYPICAL EXCAVATION AND BACKFILL PAY LIMITS
KUNIA INTERCHANGE IMPROVEMENTS
Project No IM-HI-1(219)

Scale: As Noted Date: Nov. 1997

SHEET No. R16 OF 30 SHEETS

FED. ROAD DIST. NO.	STATE	FED. AID PROJ. NO.	FISCAL YEAR	SHEET NO.	TOTAL SHEETS
HAWAII	HAW.	IM-HI-1(219)	1998	126	378

NOTES:

1. For additional retaining wall information, see "Typical Retaining Wall Section" on Sht. #R14.
2. Follow manufacturer's recomendations for materials and installation information.

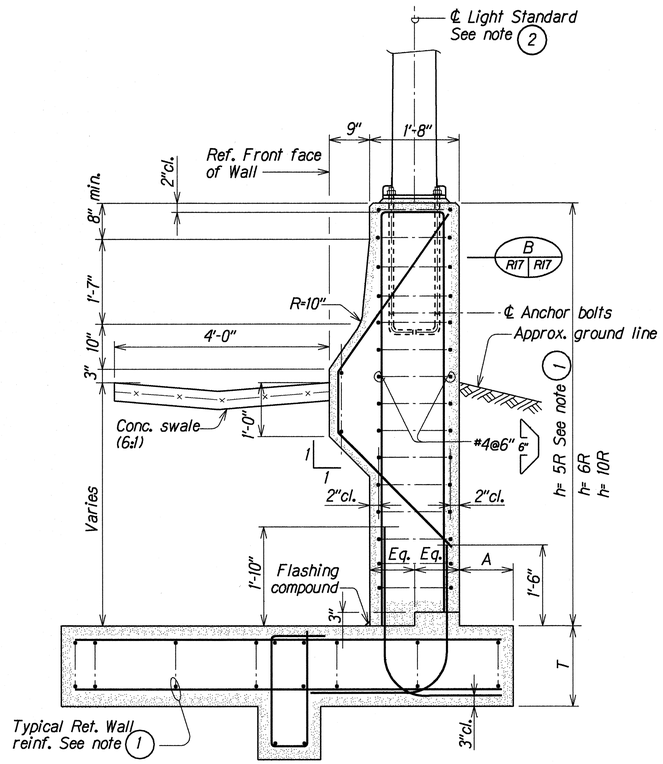

SECTION C R17 R17
Scale: 3/4" = 1'-0"

WALL DETAIL AT LIGHT STANDARD

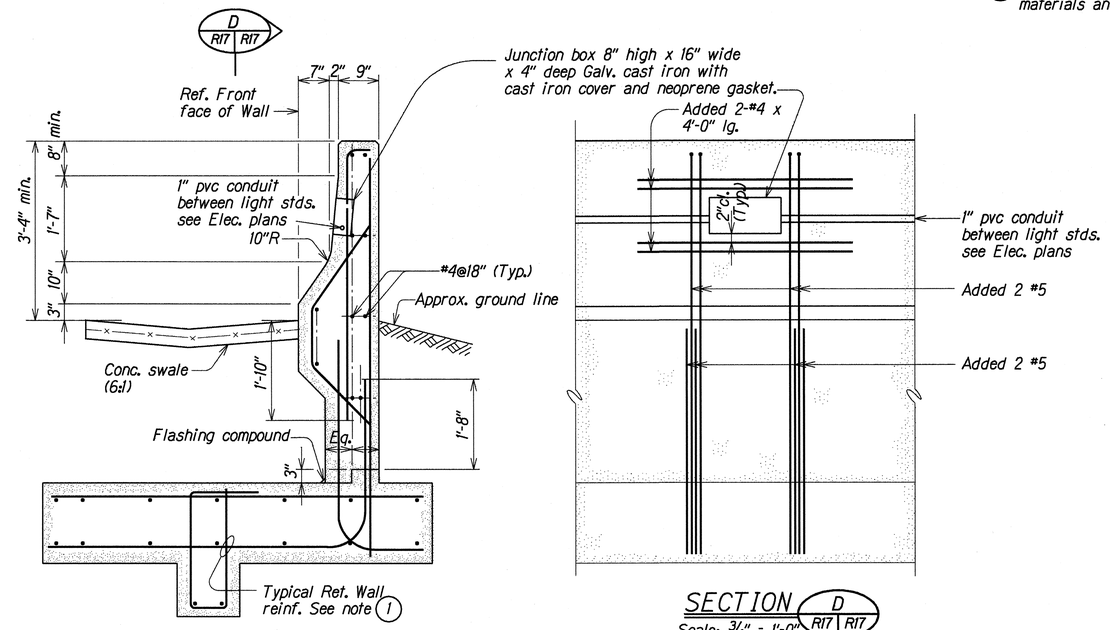

SECTION
Scale: 3/4" = 1'-0"

SECTION D R17 R17
Scale: 3/4" = 1'-0"

WALL DETAIL AT JUNCTION BOX

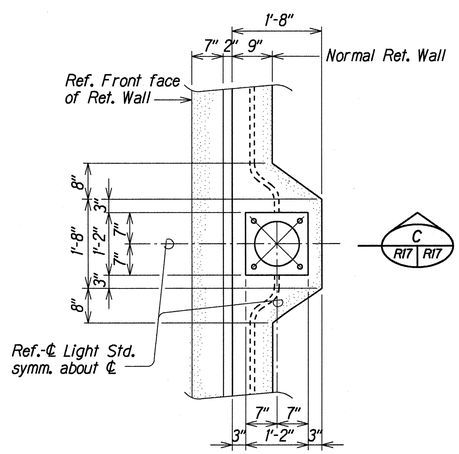

PLAN
Scale: 3/4" = 1'-0"

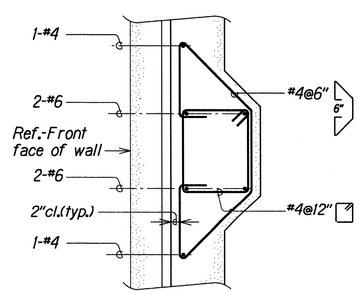

SECTION B R17 R17
Scale: 3/4" = 1'-0"

ORIGINAL PLAN	SURVEY PLOTTED BY CHO	DATE JUN. 1997
	DRAWN BY	
	TRACED BY	
NOTE BOOK	DESIGNED BY JFU	JUN. 1997
	QUANTITIES BY JFU	JUN. 1997
N.	CHECKED BY DOO	JUN. 1997

STATE OF HAWAII
DEPARTMENT OF TRANSPORTATION
HIGHWAYS DIVISION

KUNIA INTERCHANGE WALLS
WALL DETAILS AT LIGHT STANDARD AND JUNCTION BOX
KUNIA INTERCHANGE IMPROVEMENTS
Project No. IM-HI-1(219)

Scale: As Noted — Date: Nov. 1997

SHEET No. R17 OF 30 SHEETS

FED. ROAD DIST. NO.	STATE	FED. AID PROJ. NO.	FISCAL YEAR	SHEET NO.	TOTAL SHEETS
HAWAII	HAW.	IM-HI-1(219)	1998	127	378

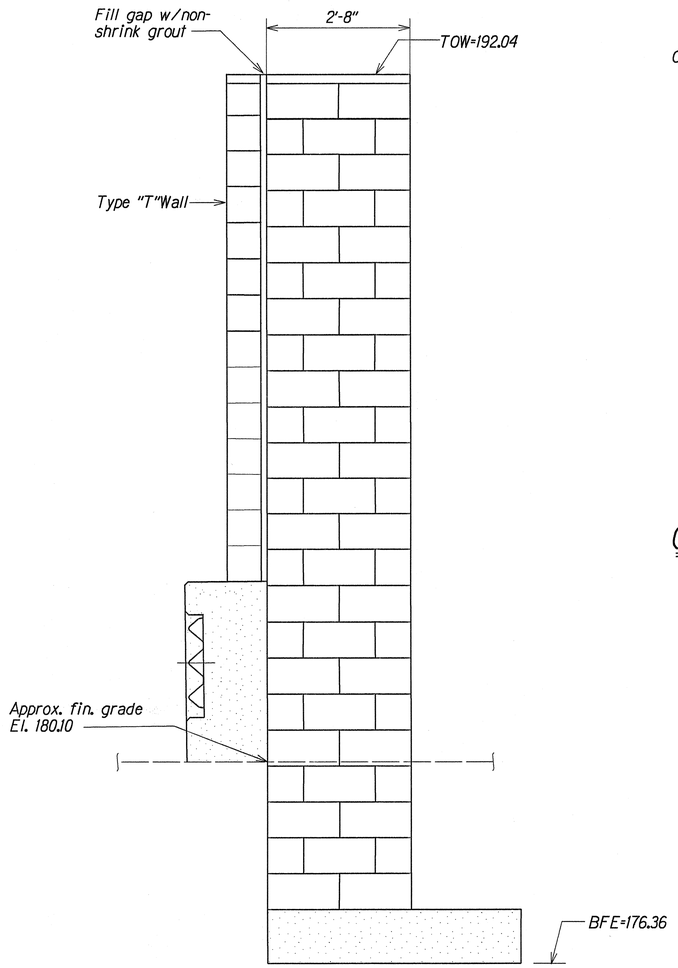

TYPE "T2" WALL (H=16)

CLOSURE WALL ELEVATION

Scale: 3/4" = 1'-0"

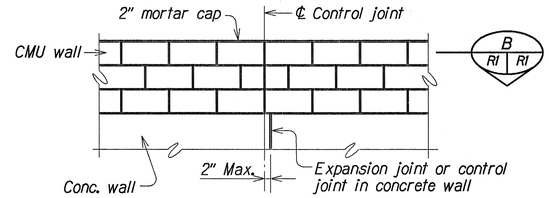

ELEVATION

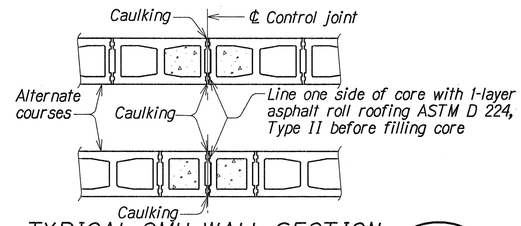

TYPICAL CMU WALL SECTION B R1 R1

CMU CONTROL JOINT DETAILS

Not to Scale

NOTES:

1. For location of work, see sht. #R8.
2. For reinforcing and footing details of closure wall, see sht. #R14 for Type "T2" wall.

ORIGINAL PLAN			
NOTE BOOK	SURVEY PLOTTED BY	LMA	DATE AUG 1997
	DRAWN BY		
	TRACED BY	JFU	AUG 1997
	DESIGNED BY	JFU	AUG 1997
No.	QUANTITIES BY	JFU	AUG 1997
	CHECKED BY	DCD	AUG 1997

STATE OF HAWAII
DEPARTMENT OF TRANSPORTATION
HIGHWAYS DIVISION

KUNIA INTERCHANGE WALLS

CLOSURE WALL ELEVATION
CMU CONTROL JOINT DETAILS

KUNIA INTERCHANGE IMPROVEMENTS
Project No. IM-HI-1(219)

Scale: As Noted Date: Nov. 1997

FED. ROAD DIST. NO.	STATE	FED. AID PROJ. NO.	FISCAL YEAR	SHEET NO.	TOTAL SHEETS
HAWAII	HAW.	IM-HI-1(219)	1998	128	378

Note:

1. 1'-4"x8"x23'-0"± lg. beam shall be pea gravel concrete or mortar. Color of concrete or mortar shall match CMU wall. Lettering shall be ½" deep into concrete or mortar.
2. Final details and spacing of letters shall be approved by the Engineer.
3. 1'-4" pea gravel concrete bond beam (including all added reinf.) shall be incidental to Type "LI" Noise Barrier Wall and will not be paid for separately.

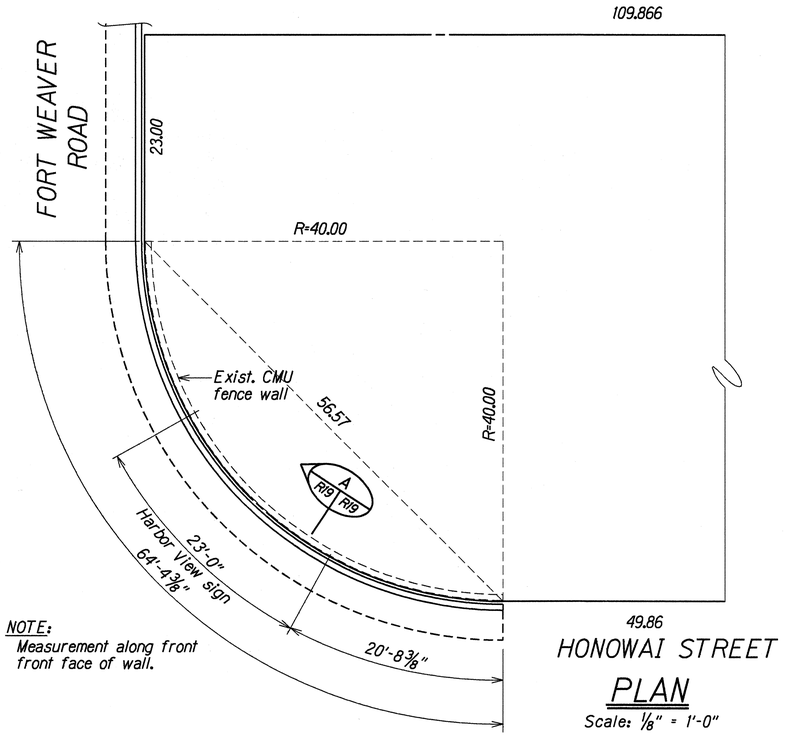

NOTE:
Measurement along front front face of wall.

PLAN

Scale: ⅛" = 1'-0"

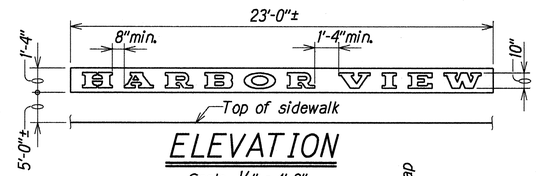

ELEVATION

Scale: ¼" = 1'-0"

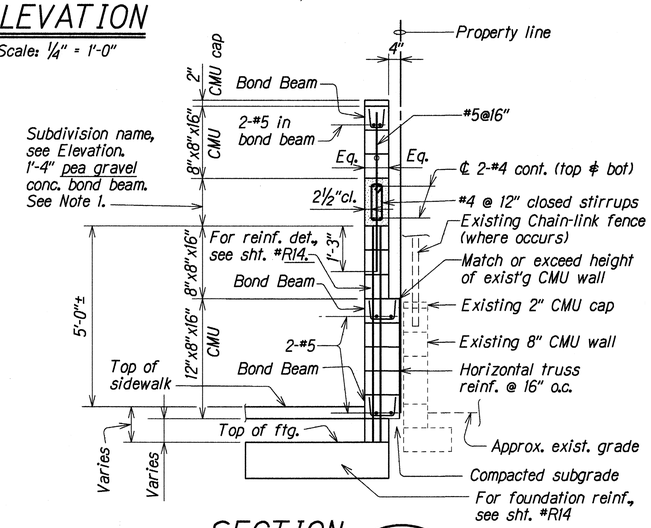

SECTION A R19 R19

Scale: ½" = 1'-0"

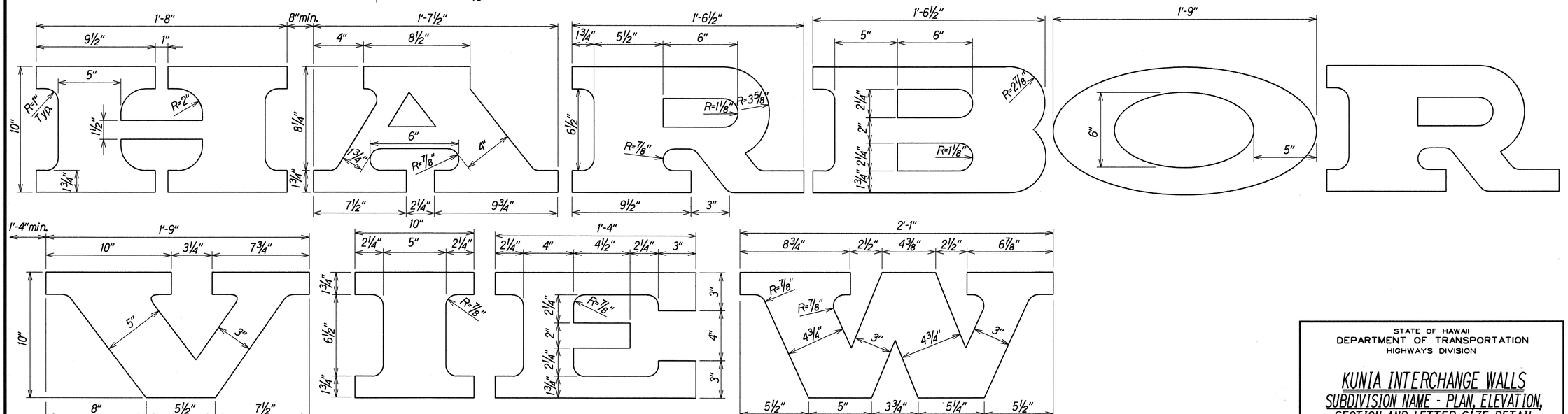

LETTER SIZE DETAIL

Scale: 3" = 1'-0"

SURVEY PLOTTED BY	CHO, LMA		DATE JUN 1997
DRAWN BY			"
TRACED BY	JFU		JUN 1997
DESIGNED BY	JFU		JUN 1997
QUANTITIES BY	JFU		JUN 1997
CHECKED BY	JFU		JUN 1997
ORIGINAL PLAN	NOTE BOOK	No.	

STATE OF HAWAII
DEPARTMENT OF TRANSPORTATION
HIGHWAYS DIVISION

KUNIA INTERCHANGE WALLS

SUBDIVISION NAME - PLAN, ELEVATION, SECTION AND LETTER SIZE DETAIL

KUNIA INTERCHANGE IMPROVEMENTS
Project No. IM-HI-1(219)

Scale: As Noted — Date: Nov. 1997

SHEET No. R19 OF 30 SHEETS

FED. ROAD DIST. NO.	STATE	FED. AID PROJ. NO.	FISCAL YEAR	SHEET NO.	TOTAL SHEETS
HAWAII	HAW.	IM-H1-1(219)	1998	129	378

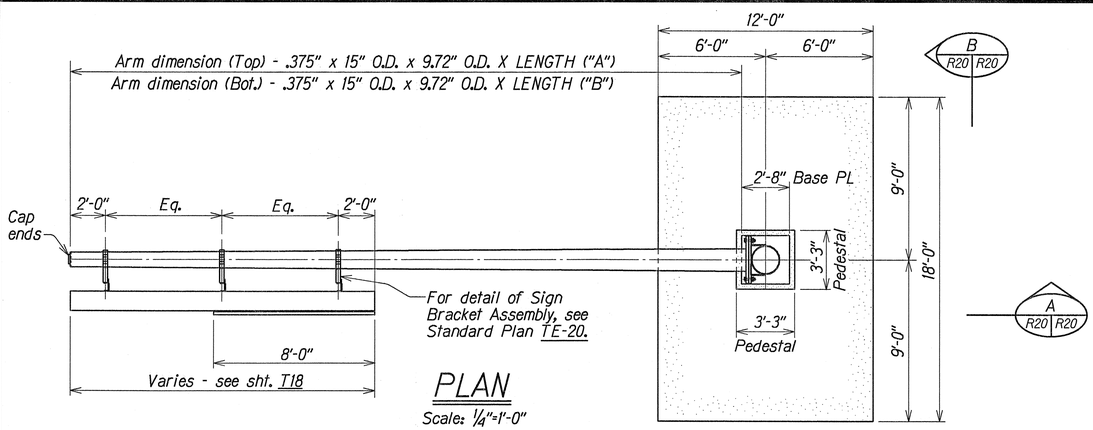

PLAN

Scale: 1/4"=1'-0"

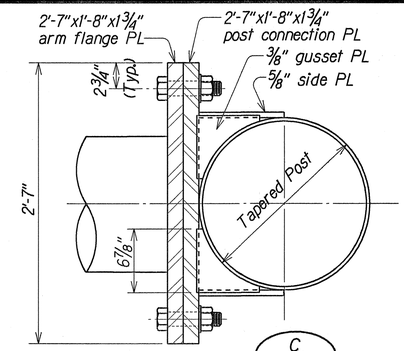

SECTION

Scale: 1 1/2"=1'-0"

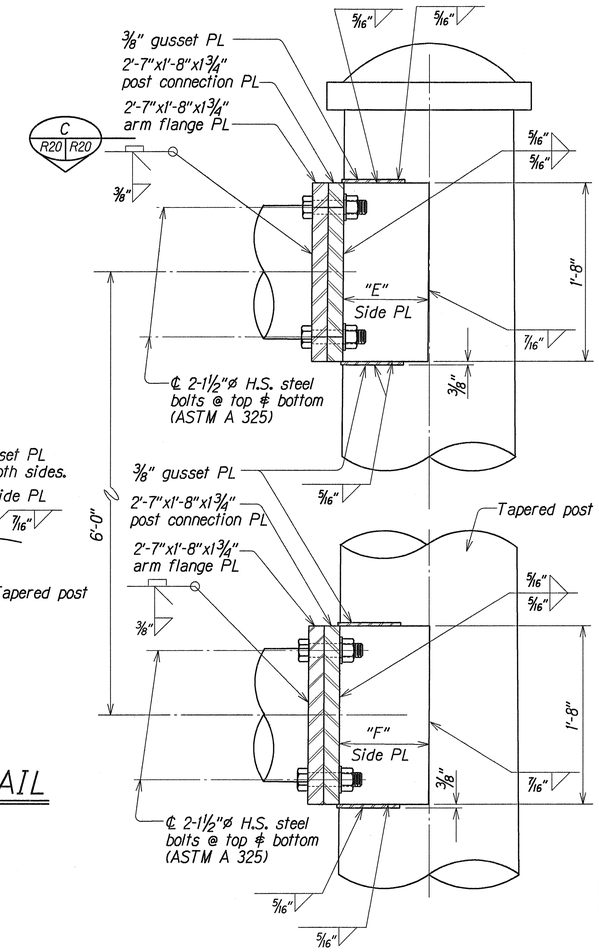

ELEVATION

Scale: 1 1/2"=1'-0"

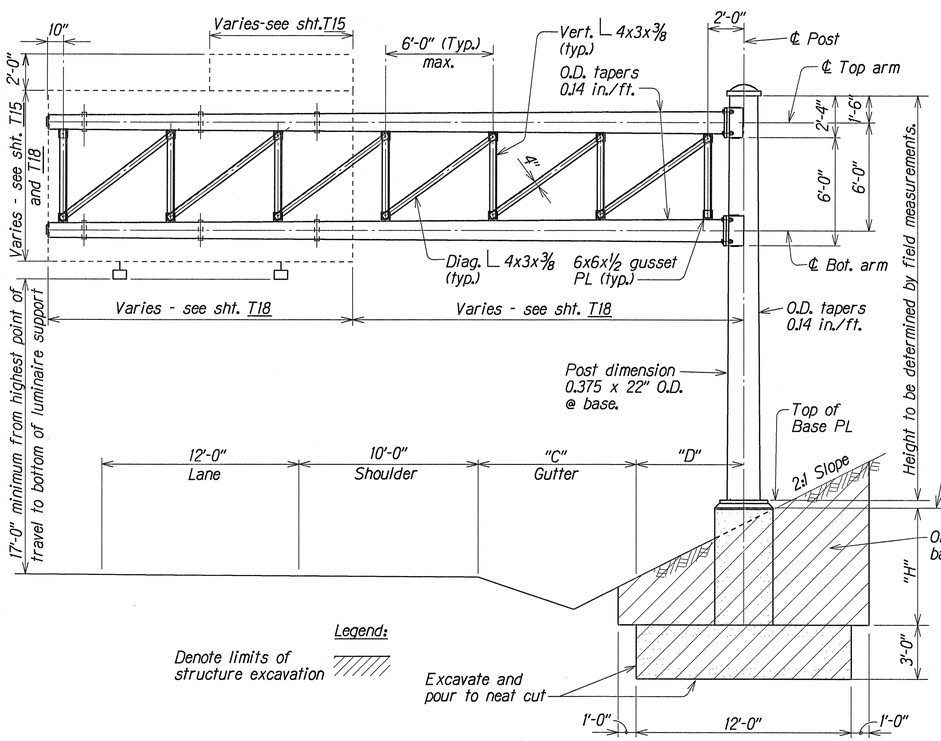

ELEVATION A R20 R20

Scale: 1/4"=1'-0"

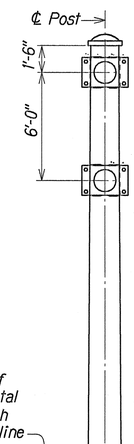

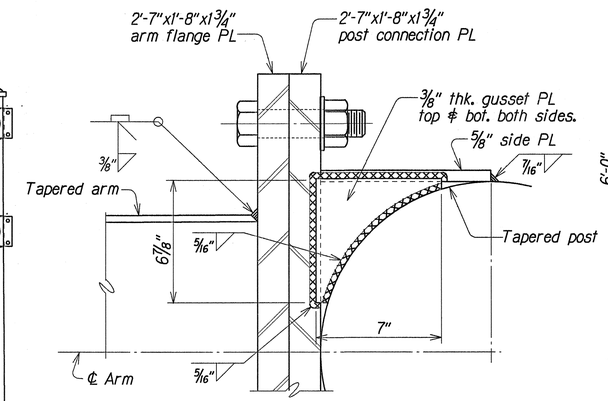

TYPICAL GUSSET PLATE DETAIL

Scale: 3"=1'-0"

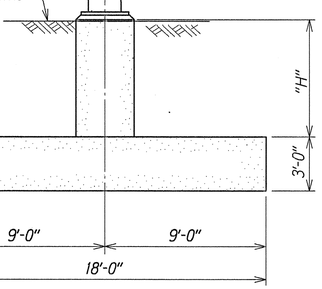

ELEVATION B R20 R20

Scale: 1/4"=1'-0"

SIGN / LOCATION	DIMENSIONS "A"	"B"	"C"	"D"	"E"	"F"	"H"
Sign E-1, Sta. 272+40±	34'-7 5/8"	35'-6 1/4"	6'-0"	7'-10"	9 5/16"±	9 15/16"±	6'-6"±
Sign E-2, Sta. 283+80±	34'-7 5/8"	35'-6 1/4"	6'-0"	7'-0"	9 5/16"±	9 15/16"±	6'-0 3/4"±
Sign E-3, Sta. 310+20±	36'-8 1/2"	36'-9 1/4"	6'-0"	7'-10"	9 5/16"±	9 15/16"±	6'-6"±
Sign E-4, Sta. 326+40±	27'-4 3/4"	27'-5 3/8"	4'-0"	3'-0"	9 1/8"	9 3/4"±	5'-5 1/2"±

ESTIMATED QUANTITIES

DESCRIPTION	UNIT	SIGN E-1	SIGN E-2	SIGN E-3	SIGN E-4	TOTAL
Structure Excavation	Cu. Yd.	45	45	45	45	180
Structural Backfill	Cu. Yd.	21	21	21	21	84
Structural Steel for Sign Supports	Lb.	6,100	6,100	6,100	6,100	24,400
Class A Concrete in Footings & Pedestals	Cu. Yd.	27	27	27	27	108
Reinforcing Steel for Footings & Pedestals	Lb.	4645	4645	4645	4645	18,580

NOTE:

Payment for the Overhead Sign Support and Overhead Sign Support Structures for Signs E-1, E-2, E-3 and E-4 shall be paid for on a lump sum basis per each overhead sign support (Items Nos. 621.1510, 621.1520, 621.1530 & 621.1540). The lump sum cost shall include all required labor, materials, equipment and incidentals necessary for the installation of the new overhead sign support and overhead sign structures. The estimated quantities listed are for assisting the Contractor's bid calculations.

ORIGINAL PLAN			
SURVEY PLOTTED BY			DATE
DRAWN BY	TKM		JUN 1997
TRACED BY			JUN 1997
TYPED BY			JUN 1997
DESIGNED BY	JFU		JUN 1997
QUANTITIES BY			JUN 1997
CHECKED BY			
NOTE BOOK No.			

STATE OF HAWAII
DEPARTMENT OF TRANSPORTATION
HIGHWAYS DIVISION

KUNIA INTERCHANGE WALLS

SIGNS E-1, E-2, E-3 & E-4 - CANTILEVER SIGN SUPPORT POST, ARM AND CONNECTION DETAILS

KUNIA INTERCHANGE IMPROVEMENTS

Project No IM-H1-1(219)

Scale: As Noted — Date: Nov. 1997

SHEET No. R20 OF 30 SHEETS

FED. ROAD DIST. NO.	STATE	FED. AID PROJ. NO.	FISCAL YEAR	SHEET NO.	TOTAL SHEETS
HAWAII	HAW.	IM-HI-1(219)	1998	130	378

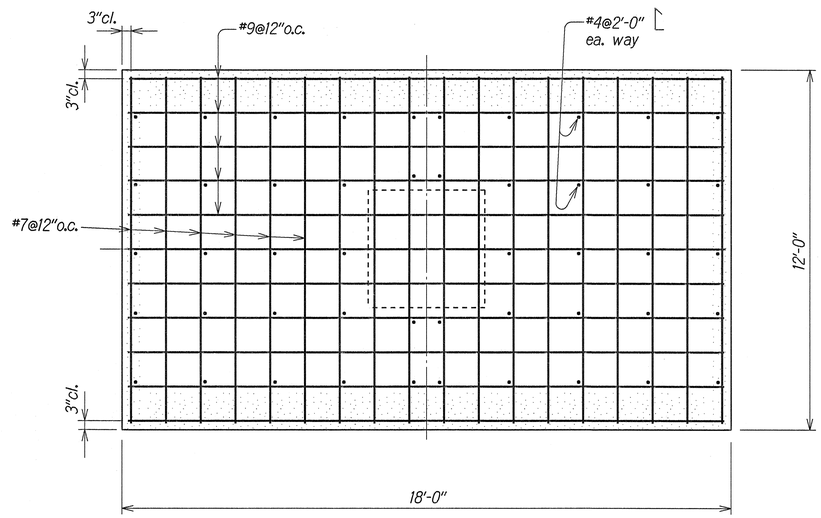

TOP FOOTING REINFORCEMENT

Scale: ½"=1'-0"

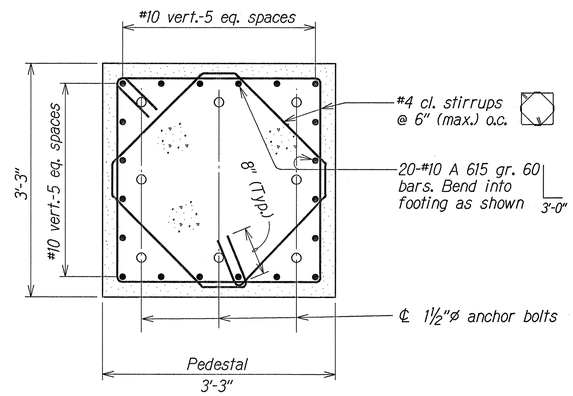

SECTION A R21 R21

Scale: 1"=1'-0"

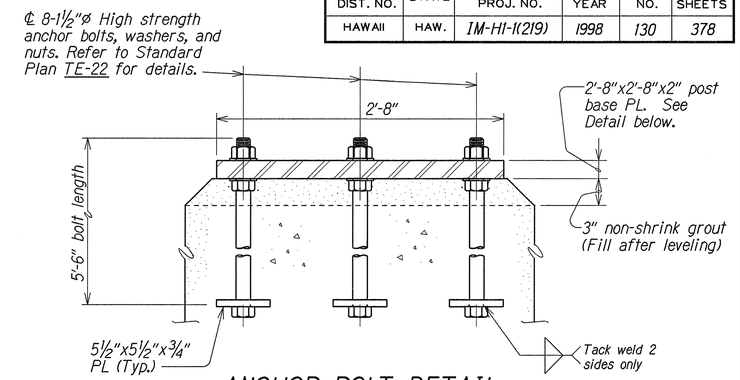

ANCHOR BOLT DETAIL

Scale: 1½"=1'-0"

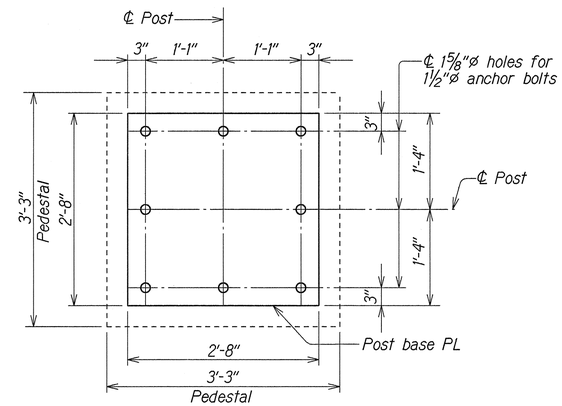

BASE PLATE DETAIL

Scale: 1"=1'-0"

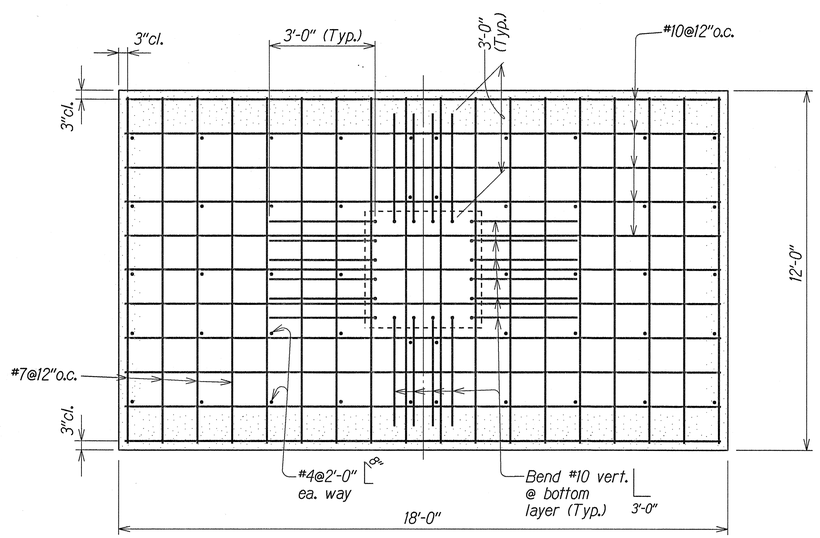

BOTTOM FOOTING REINFORCEMENT

Scale: ½"=1'-0"

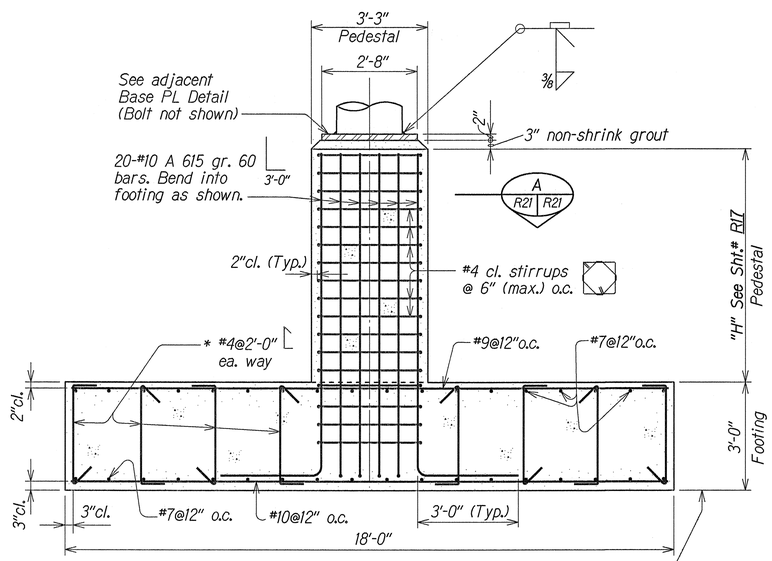

* Alternate 135° & 90° hooks bothways horizontally.

Approx. Bot. Ftg.
El. 161.00± Sign E-1, Sta. 272+40± Rt.
El. 158.00± Sign E-2, Sta. 283+80± Rt.
El. 187.25± Sign E-3, Sta. 310+20± Rt.
El. 195.75± Sign E-4, Sta. 326+40± Lt.

LONGITUDINAL SECTION THRU CONCRETE PEDESTAL

Scale: ½"=1'-0"

CONCRETE FOOTING AND PEDESTAL REINFORCEMENT

ORIGINAL PLAN	SURVEY PLOTTED BY	TKM	DATE JUN 1997
	DRAWN BY		
	TRACED BY	XXX	JUN 1997
NOTE BOOK	DESIGNED BY	JFU	JUN 1997
	QUANTITIES BY		
No. 0/10/21	CHECKED BY	DCO	JUN 1997

STATE OF HAWAII
DEPARTMENT OF TRANSPORTATION
HIGHWAYS DIVISION

KUNIA INTERCHANGE WALLS
SIGNS E-1, E-2, E-3, & E-4
CONCRETE FOOTING AND PEDESTAL DETAILS
KUNIA INTERCHANGE IMPROVEMENTS
Project No IM-HI-1(219)

Scale: As Noted Date: Nov. 1997

SHEET No. R21 OF 30 SHEETS

FED. ROAD DIST. NO.	STATE	FED. AID PROJ. NO.	FISCAL YEAR	SHEET NO.	TOTAL SHEETS
HAWAII	HAW.	IM-H1-1(219)	1998	C.O. 131	378

1

NOTE:

1. The work necessary to construct end post connection shall include all labor, materials, tools, equipment and incidentals necessary to complete the work and shall be considered incidental to Item No. 503.1050 "Concrete in Retaining Walls" and will not be paid for separately.

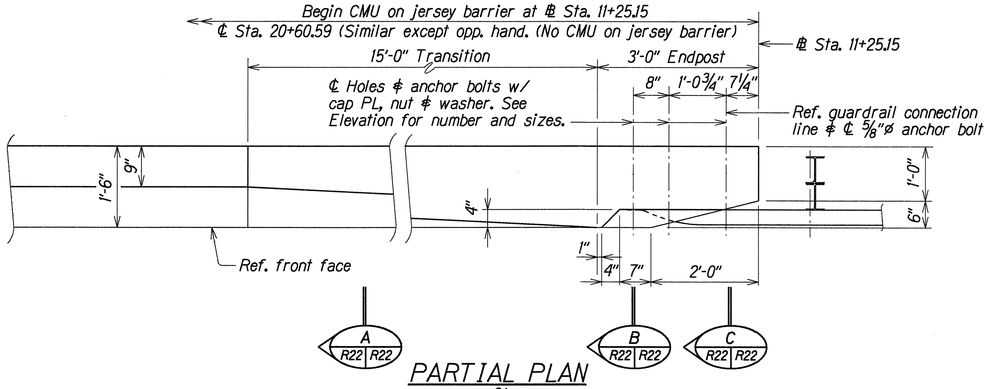

PARTIAL PLAN
Scale: ¾" = 1'-0"

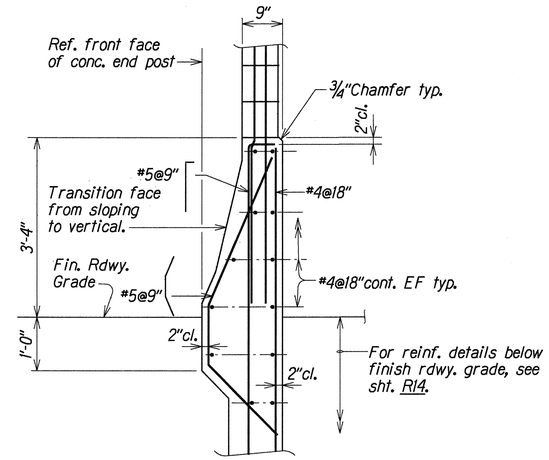

SECTION A
Scale: ¾" = 1'-0"
R22 R22

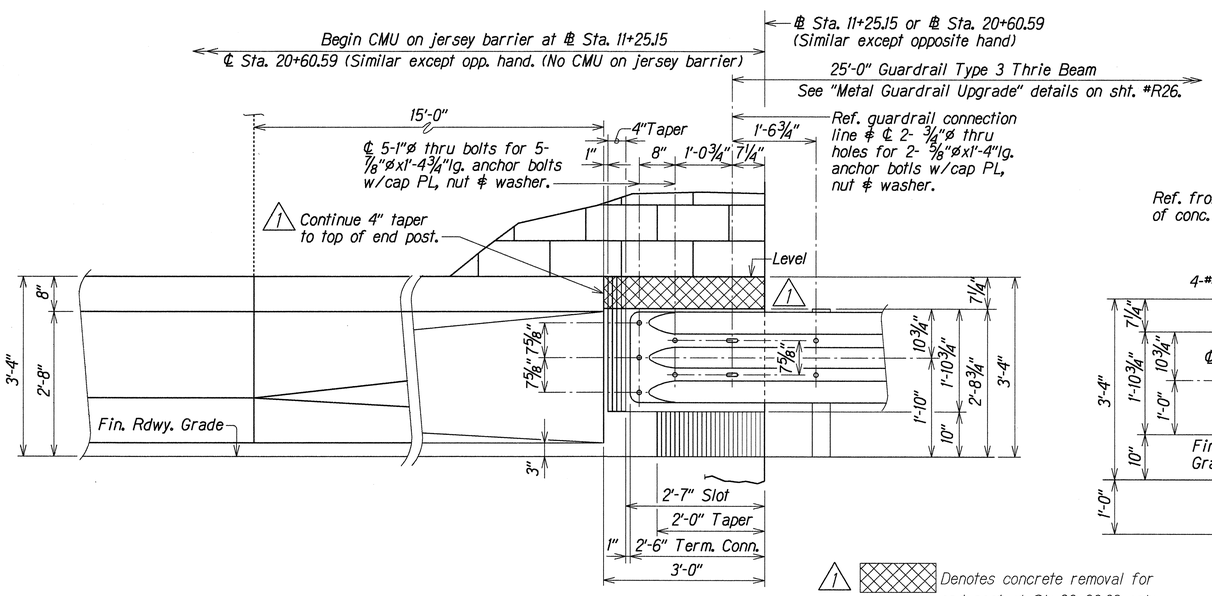

PARTIAL ELEVATION
Scale: ¾" = 1'-0"

1 Denotes concrete removal for end post at Sta.20+80.69 only.

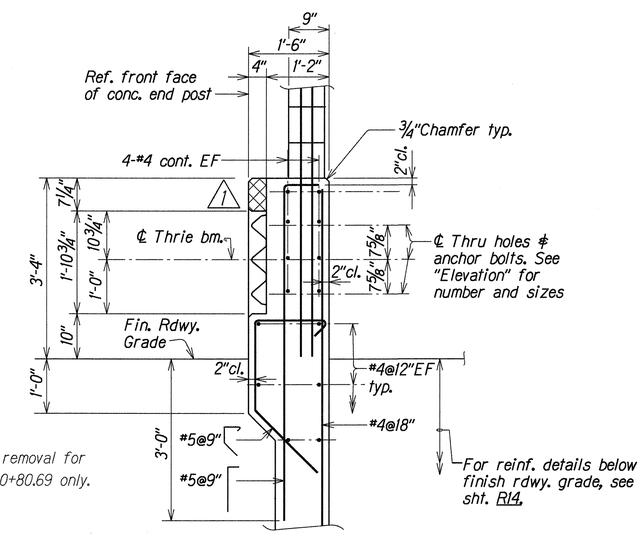

SECTION B
Scale: ¾" = 1'-0"
R22 R22

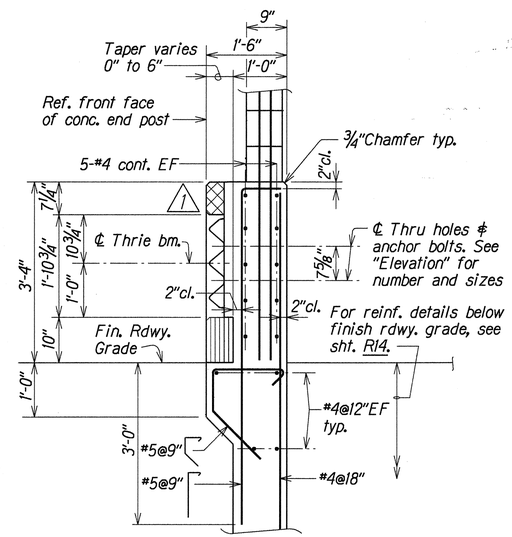

SECTION C
Scale: ¾" = 1'-0"
R22 R22

ORIGINAL PLAN		
NOTE BOOK	SURVEY PLOTTED BY	TKM
	DRAWN BY	
	TRACED BY	JFU
	DESIGNED BY	JFU
	QUANTITIES BY	JFU
	CHECKED BY	DCO
	DATE	JUN. 1997
		JUN. 1997
		JUN. 1997
		JUN. 1997
		JUN. 1997

DATE	REVISIONS
1 4/26/2000	Added concrete removal at end post at Sta. 20+60.59 only.

STATE OF HAWAII
DEPARTMENT OF TRANSPORTATION
HIGHWAYS DIVISION

KUNIA INTERCHANGE WALLS
RAMP "EH" - END POST CONNECTION
PLAN, ELEVATIONS, AND SECTIONS
KUNIA INTERCHANGE IMPROVEMENTS
Project No. IM-H1-1(219)

Scale: As Noted — Date: Nov. 1997

SHEET No. R22 OF 30 SHEETS

C.O. 131

FED. ROAD DIST. NO.	STATE	FED. AID PROJ. NO.	FISCAL YEAR	SHEET NO.	TOTAL SHEETS
HAWAII	HAW.	IM-HI-1(219)	1998	132	378

NOTE:

1. The work necessary to construct end post connection shall include all labor, materials, tools, equipment and incidentals necessary to complete the work and shall be considered incidental to Item No. 503.1050 "Concrete in Retaining Walls" and will not be paid for separately.

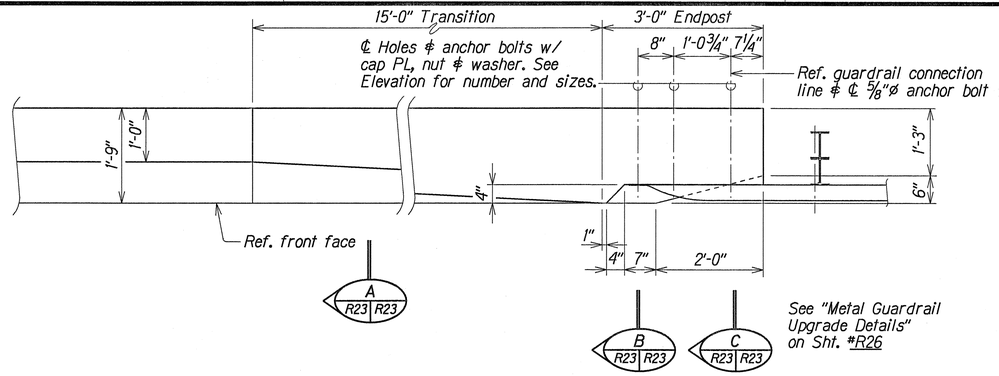

PARTIAL PLAN
Scale: ¾" = 1'-0"

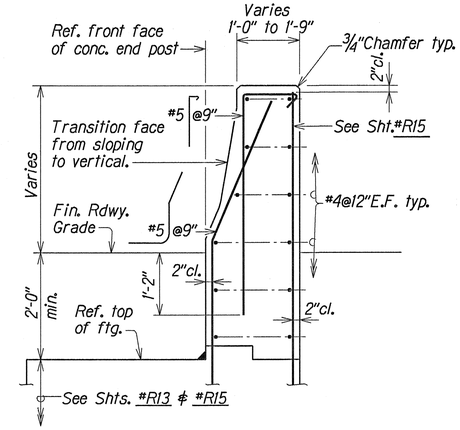

SECTION
Scale: ¾" = 1'-0"

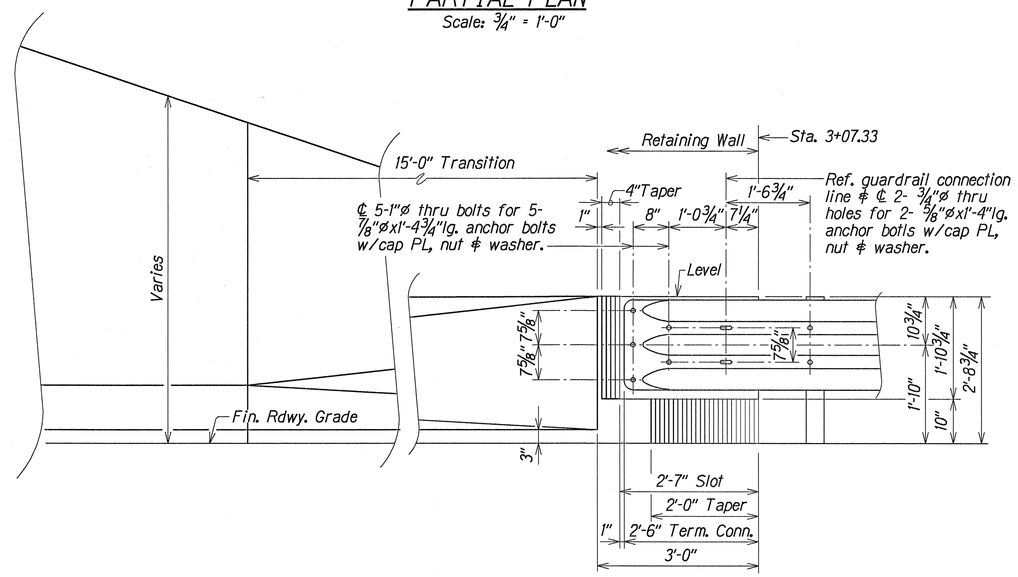

PARTIAL ELEVATION
Scale: ¾" = 1'-0"

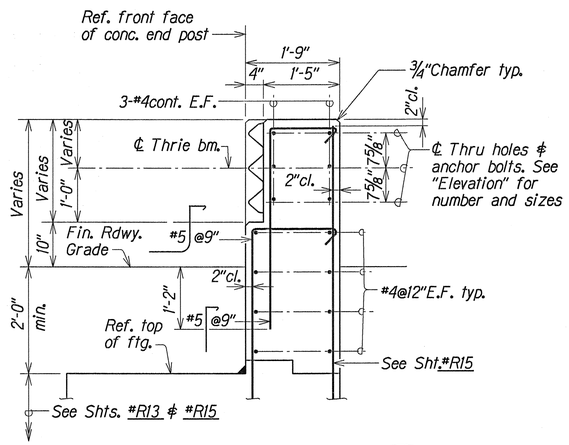

SECTION
Scale: ¾" = 1'-0"

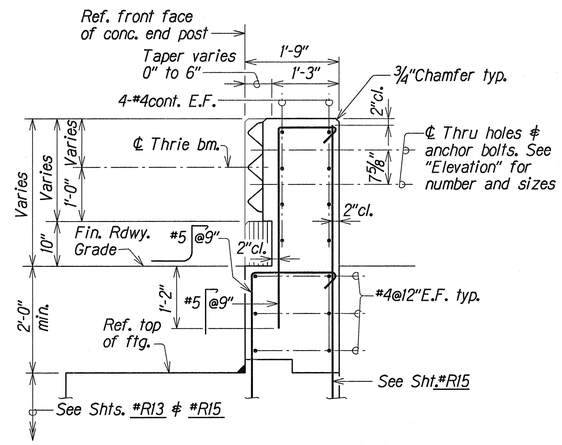

SECTION
Scale: ¾" = 1'-0"

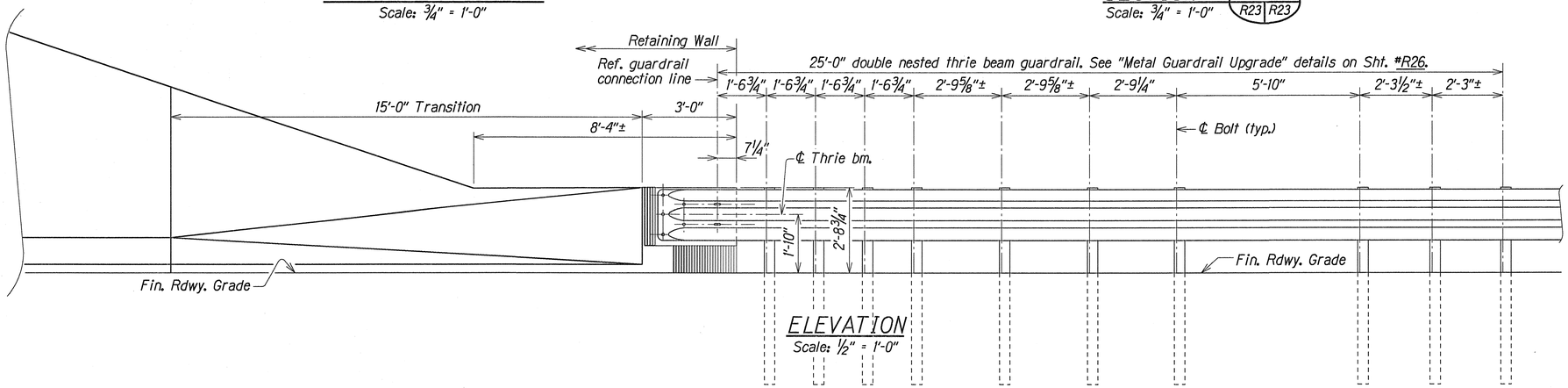

ELEVATION
Scale: ½" = 1'-0"

ORIGINAL PLAN	SURVEY PLOTTED BY	KSG	DATE JUN 1997
	DRAWN BY		
	TRACED BY		
NOTE BOOK	DESIGNED BY	JFU	JUN 1997
	QUANTITIES BY	JFU	JUN 1997
No. dhhlr23	CHECKED BY	DOO	JUN 1997

STATE OF HAWAII
DEPARTMENT OF TRANSPORTATION
HIGHWAYS DIVISION

KUNIA INTERCHARGE WALLS
RAMP "HE" - END POST CONNECTION
PLAN, ELEVATIONS & SECTIONS
KUNIA INTERCHANGE IMPROVEMENTS
Project No. IM-HI-1(219)

Scale: As Noted Date: Nov. 1997

SHEET No. R23 OF 30 SHEETS

FED. ROAD DIST. NO.	STATE	FED. AID PROJ. NO.	FISCAL YEAR	SHEET NO.	TOTAL SHEETS
HAWAII	HAW.	IM-HI-1(219)	1998	133	378

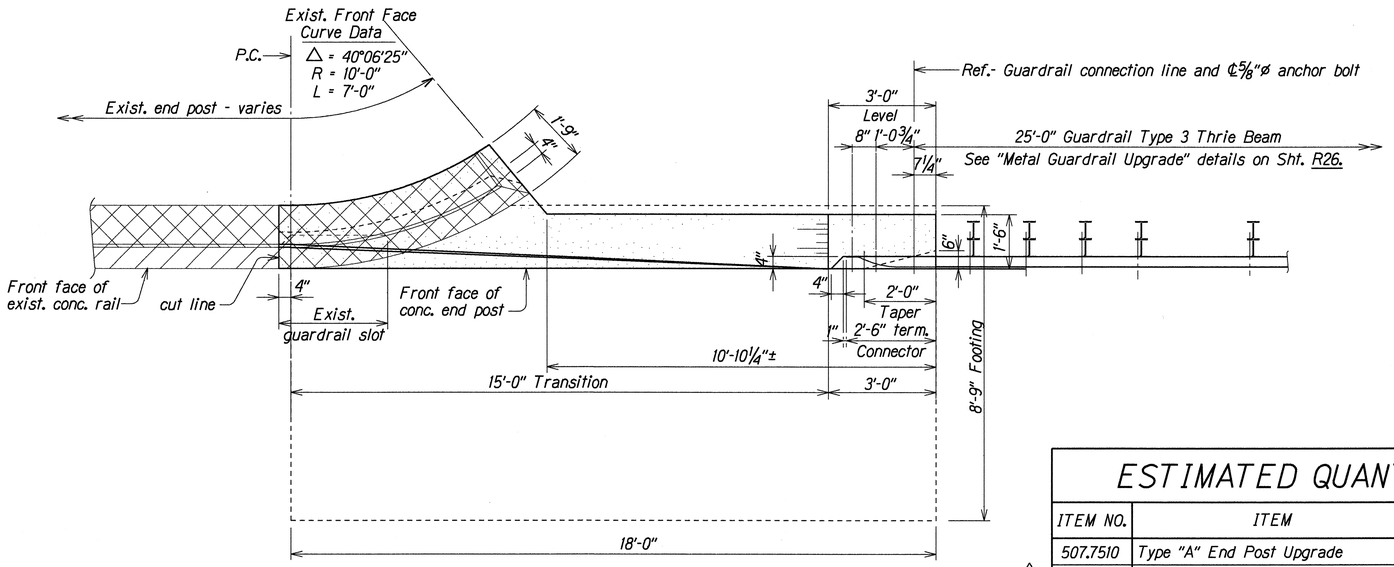

PLAN - TYPE "A" END POST UPGRADE

Scale: 1/2"=1'-0"

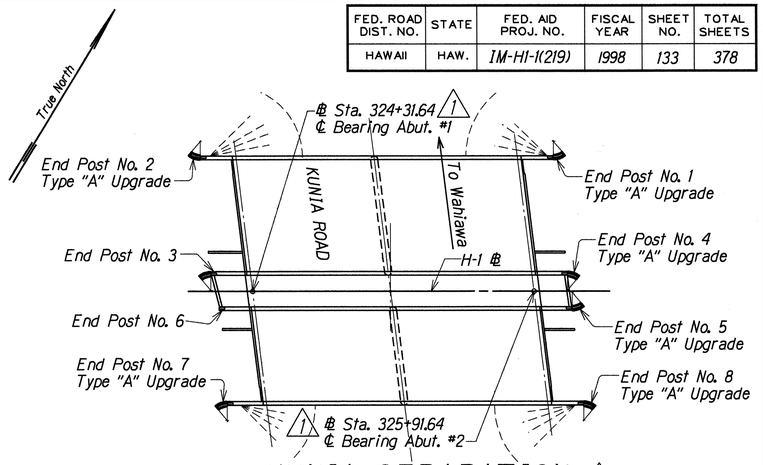

KUNIA SEPARATION LAYOUT PLAN △1

Not to Scale

ESTIMATED QUANTITIES

ITEM NO.	ITEM	UNIT	QUANTITIES	TOTAL
507.7510	Type "A" End Post Upgrade	Ea.	6	6
676.0010	Replace Elastomeric Bearing Pad	Ea.	36	36

△1

NOTE:

Structure excavation shown thus

Structure backfill shown thus

Structure backfill material shall conform to glassphalt base course. See Section 312 of Standard Specifications.

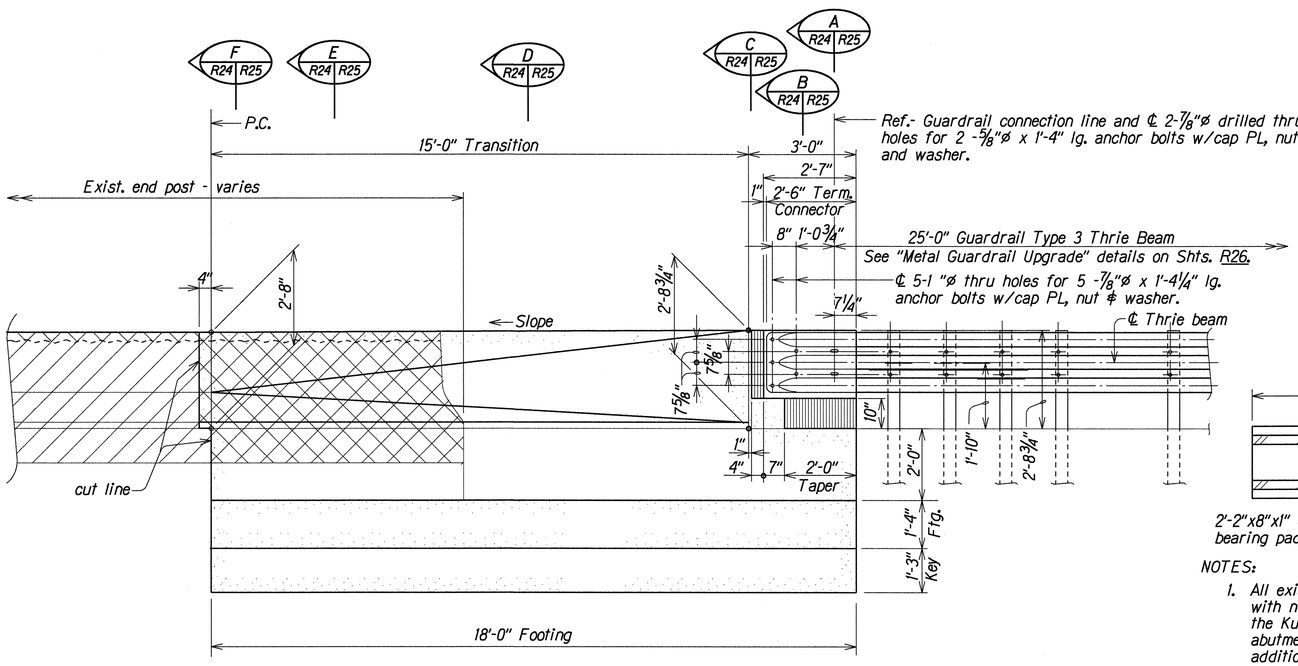

ELEVATION - TYPE "A" END POST UPGRADE

Scale: 1/2"=1'-0"

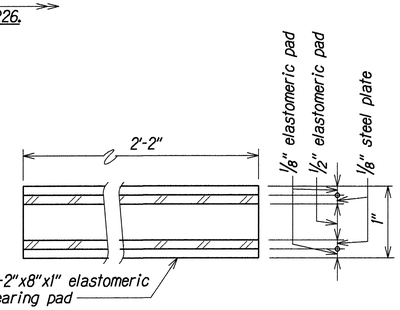

NOTES:

1. All exist. bearing pads shall be replaced with new elastomeric bearing pads for the Kunia Separation Structure at all abutments. See Special Provisions for additional details.
2. Kunia Separation Structure is shown above.
3. See Shts. ES1, ES2, ES3, and ES4 for details of existing bearing pad.

△1 ELASTOMERIC BEARING PAD DETAIL

Full size

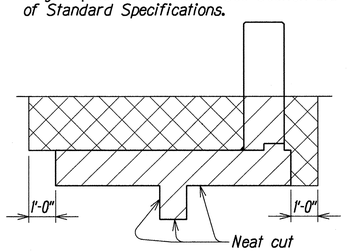

TYPICAL STRUCTURE EXCAVATION AND BACKFILL

Not to Scale

DATE	REVISION
△1 1/14/98	Renamed title and added ℄ Sta. to Layout Plan for clarity. Added Elastomeric Bearing Pad Detail and Estimated Quantities for same. Revised title block.

STATE OF HAWAII
DEPARTMENT OF TRANSPORTATION
HIGHWAYS DIVISION

KUNIA INTERCHANGE WALLS

LAYOUT PLAN AND ESTIMATED QUANTITIES

PLAN & ELEVATION - TYPE "A" END POST UPGRADE

TYPICAL STRUCTURE EXCAVATION AND BACKFILL

△1 ELASTOMERIC BEARING PAD DETAIL

KUNIA INTERCHANGE IMPROVMENTS

Scale: As Noted | Project No. IM-HI-1(219) | Date: Nov. 1997

△1

ORIGINAL PLAN			DATE
	SURVEY PLOTTED BY	LMA	JUN 1997
	DRAWN BY		
	TRACED BY		JUN 1997
NOTE BOOK	DESIGNED BY	JFU	JUN 1997
	QUANTITIES BY	JFU	XX 1997
No.	CHECKED BY	DOO	

SHEET No. R24 OF 30 SHEETS

ADD. 133

FED. ROAD DIST. NO.	STATE	FED. AID PROJ. NO.	FISCAL YEAR	SHEET NO.	TOTAL SHEETS
HAWAII	HAW.	IM-H1-1(219)	1998	ADD. 133S-1	378

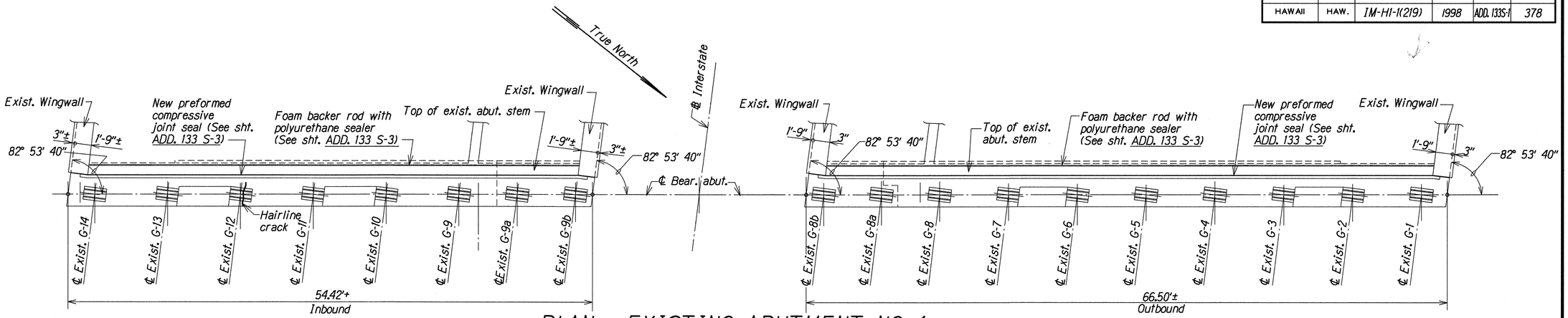

PLAN - EXISTING ABUTMENT NO. 1

Scale: 3/16" = 1'-0"

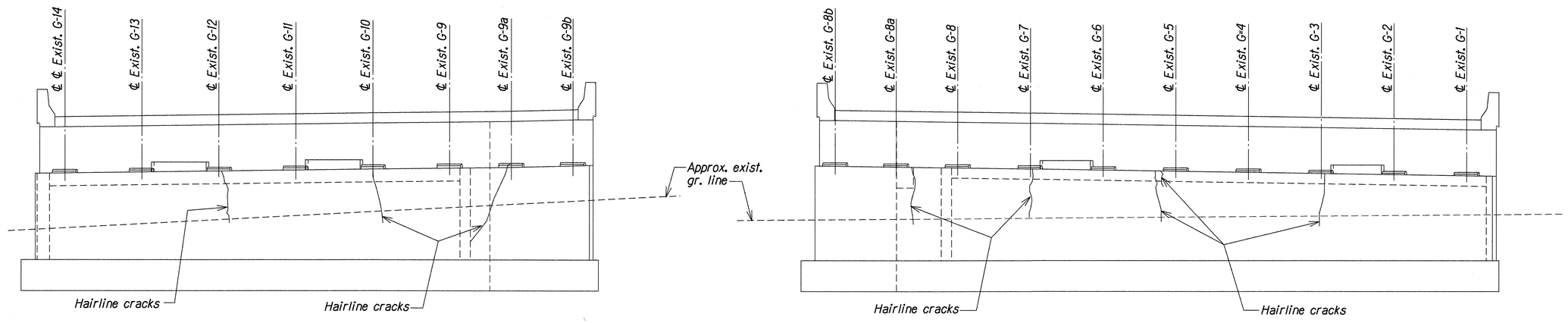

ELEVATION - EXISTING ABUTMENT NO. 1

Scale: 3/16" = 1'-0"

NOTES:

1. Seal hairline cracks. See Special Provisions. Extent of cracks shown is estimated. Actual limits shall be determined in the field and approved by the Engineer. Cracks may extend onto abutment shelf and upper stem of abutment wall. For estimation purposes, assume length of cracks in Abutments No. 1 and No. 2 is 275 feet.
2. See also Sheet ADD. 133 S-1 for sealing of cracks in Abutment No. 2.

ESTIMATED QUANTITIES*

ITEM NO.	DESCRIPTION	UNIT	QUANTITIES
677.0010	Sealing Cracks in Bridges	Lin. Ft.	275 l.f.

* Estimated Quantities applies only to sealing of cracks in bridge.

DATE	REVISION
1/25/98	This sheet added to original contract plans.

STATE OF HAWAII
DEPARTMENT OF TRANSPORTATION
HIGHWAYS DIVISION

KUNIA INTERCHANGE STRUCTURE
ABUTMENT NO. 1 CRACK REPAIRS
PLAN AND ELEVATION
KUNIA INTERCHANGE IMPROVEMENTS
Project No. IM-H1-1(219)

Scale: As Noted — Date: Jan. 1998

SHEET No. S1 OF 3 SHEETS

ADD. 133 S-1

ORIGINAL PLAN	SURVEY PLOTTED BY	LMA	DATE JAN. 1998
	DRAWN BY		
	TRACED BY	JFU	JAN. 1998
NOTE BOOK	DESIGNED BY	JFU	JAN. 1998
	QUANTITIES BY		JAN. 1998
No. kunsp	CHECKED BY	DCO	JAN. 1998

FED. ROAD DIST. NO.	STATE	FED. AID PROJ. NO.	FISCAL YEAR	SHEET NO.	TOTAL SHEETS
HAWAII	HAW.	IM-HI-1(219)	1998	ADD. 133 S-2	378

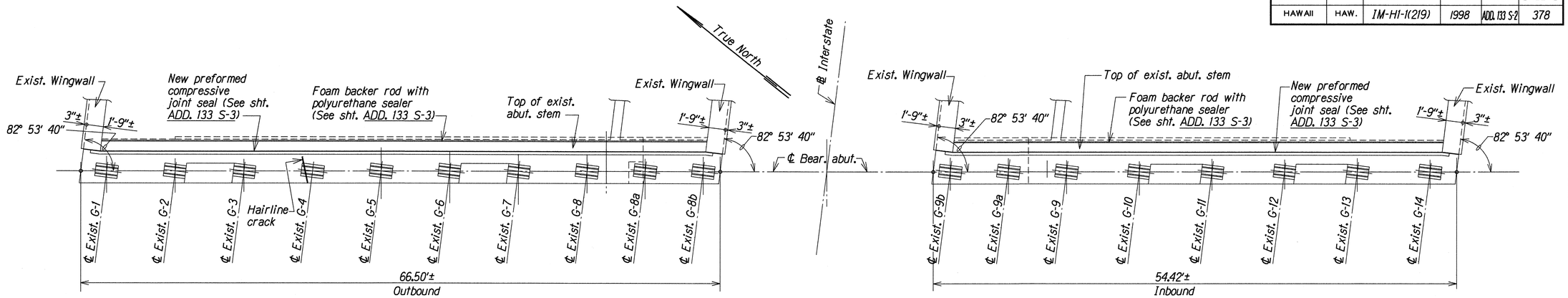

PLAN -EXISTING ABUTMENT NO. 2

Scale: 3/16" = 1'-0"

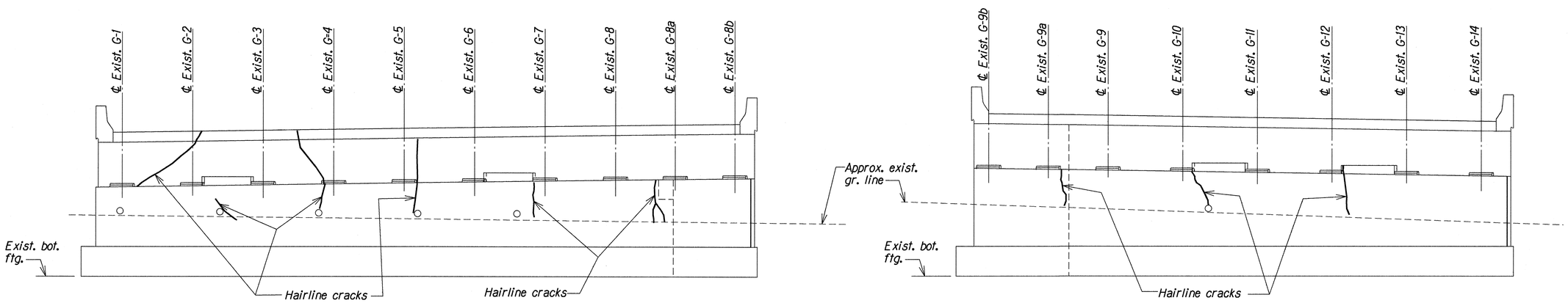

ELEVATION - EXISTING ABUTMENT NO. 2

Scale: 3/16" = 1'-0"

NOTES:

1. Seal hairline cracks. See Special Provisions. Extent of cracks shown is estimated. Actual limits shall be determined in the field and approved by the Engineer. Cracks may extend onto abutment shelf and upper stem of abutment wall.
2. See also Sheet ADD. 133 S-1 for sealing of cracks in Abutment No. 1 and Estimated Quantities for Crack Repairs.

ORIGINAL PLAN	SURVEY PLOTTED BY LMA	DATE JAN. 1998
	DRAWN BY "	"
	TRACED BY "	"
NOTE BOOK	DESIGNED BY JFU	JAN. 1998
	QUANTITIES BY JFU	JAN. 1998
N. kunsag	CHECKED BY DCO	JAN. 1998

DATE	REVISION
1/25/98	This sheet added to original contract plans.

STATE OF HAWAII
DEPARTMENT OF TRANSPORTATION
HIGHWAYS DIVISION

KUNIA INTERCHANGE STRUCTURE
ABUTMENT NO. 2 CRACK REPAIRS
PLAN AND ELEVATION
KUNIA INTERCHANGE IMPROVEMENTS
Project No. IM-HI-1(219)

Scale: As Noted Date: Jan. 1998

SHEET No. S2 OF 3 SHEETS

ADD. 133 S-2

FED. ROAD DIST. NO.	STATE	FED. AID PROJ. NO.	FISCAL YEAR	SHEET NO.	TOTAL SHEETS
HAWAII	HAW.	IM-HI-1(219)	1998	ADD. 133 S-3	378

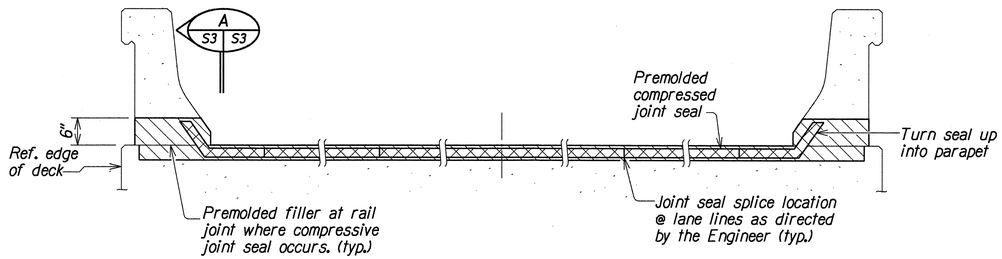

TYPICAL SECTION AT JOINT SEAL

Not to Scale

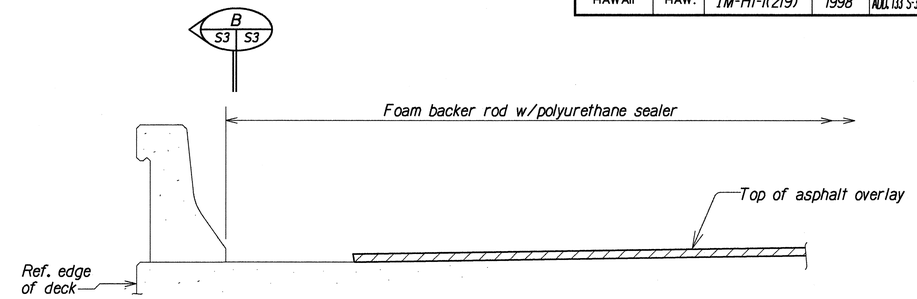

TYPICAL SECTION AT JOINT SEAL

Not to Scale

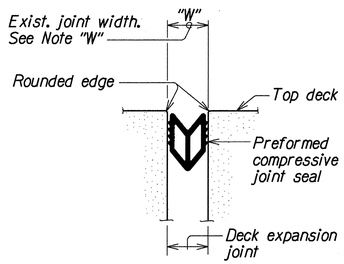

SECTION A S3 S3
Not to Scale

Note:

"W" Existing joint width. This width shall also be the installation width of the new preformed joint seal. The new preformed joint seal size shall be determined by this installation width as recommended by the manufacturer, and shall be approved by the Engineer. This width "W" shall be uniform throughout and shall be saw-cut, if required, as approved by the Engineer.

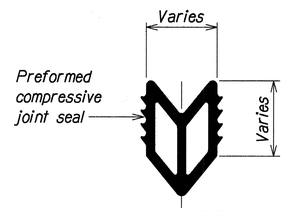

SEAL DETAIL

Not to Scale

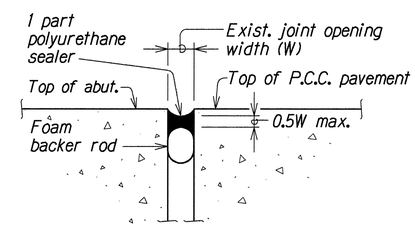

SECTION B S3 S3
Not to Scale

PREFORMED COMPRESSIVE JOINT SEALER

FOAM BACKER ROD WITH POLYURETHANE SEALER

TYPICAL EXPANSION JOINT REPAIRS

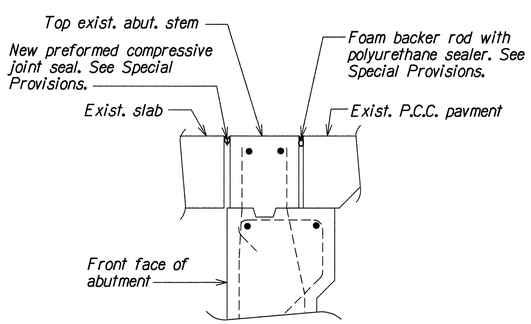

TYPICAL SECTION AT ABUTMENT

Not to Scale

ESTIMATED QUANTITIES*

ITEM NO.	DESCRIPTION	UNIT	QUANTITIES
678.0010	Expansion Joint Repair	Lump Sum	l.s.

* Estimated Quantities applies only to expansion joint repair.

NOTES:

1. Expansion joint repair consists of replacing existing joints with preformed compressive joint sealer and filling the gap between abutment and P.C.C. pavement with foam backer rod and 1 part polyurethane sealer. Work shall be done at Abutment No. 1 and No. 2 (See sht. ADD 133 S-1 and Add. 133 S-2). See shts ADD. 133 S-8 and ADD. 133 S-9 for additional details of the expansion joints at the Abutments No. 1 and No. 2.

DATE	REVISION
1/25/98	This sheet added to original contract plans.

STATE OF HAWAII
DEPARTMENT OF TRANSPORTATION
HIGHWAYS DIVISION

KUNIA INTERCHANGE STRUCTURE
EXPANSION JOINT REPAIRS
SECTIONS
KUNIA INTERCHANGE IMPROVEMENTS
Project No. IM-HI-1(219)

Scale: As Noted Date: Jan. 1998

SHEET No. S3 OF 3 SHEETS

ADD. 133 S-3

ORIGINAL PLAN		DATE
	SURVEY PLOTTED BY	LMA
	DRAWN BY	
	TRACED BY	JFU
NOTE BOOK	DESIGNED BY	JFU
	QUANTITIES BY	JFU
No.	CHECKED BY	DOO

JAN 1998
JAN 1998
JAN 1998
JAN 1998

FED. ROAD DIST. NO.	STATE	FED. AID PROJ. NO.	FISCAL YEAR	SHEET NO.	TOTAL SHEETS
HAWAII	HAW.	IM-HI-1(219)	2000	C0133S-3A	378

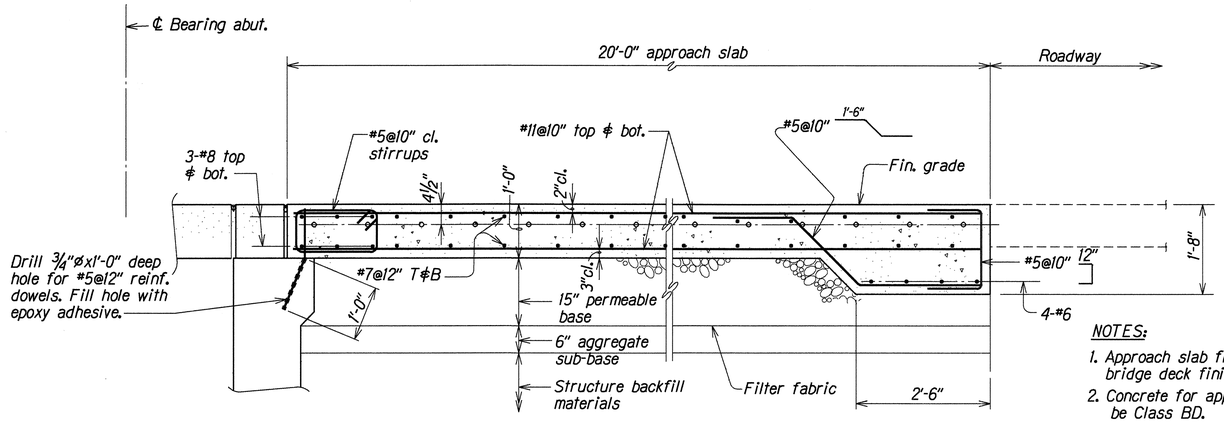

NOTES:

1. Approach slab finish shall match bridge deck finish.
2. Concrete for approach slab shall be Class BD.

TYPICAL APPROACH SLAB DETAILS AT END POST NO. 2

Scale: ¾" = 1'-0"

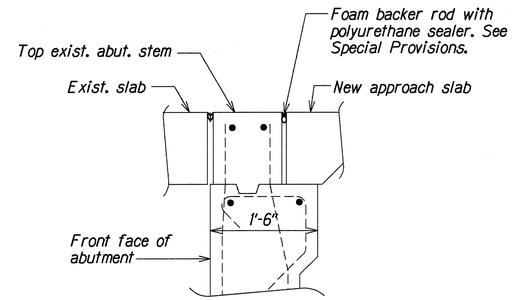

TYPICAL SECTION AT ABUTMENT

Not to Scale

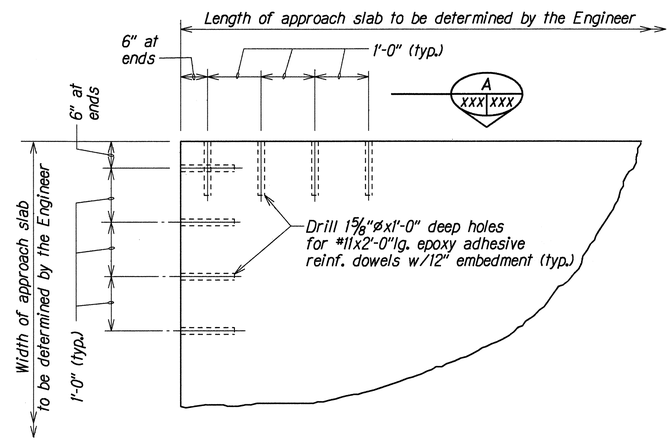

PARTIAL PLAN - APPROACH SLAB AT END POST NO. 2

Scale: ¾" = 1'-0"

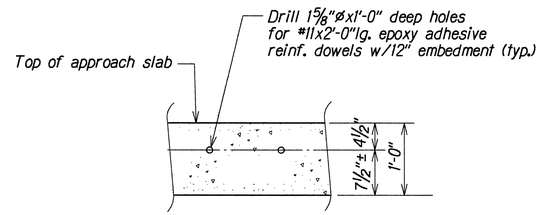

DETAIL A XXX XXX

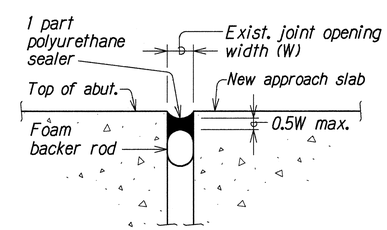

FOAM BACKER ROD WITH POLYURETHANE SEALER

Not to Scale

ORIGINAL PLAN		DATE
	SURVEY PLOTTED BY	TKM
	DRAWN BY	
NOTE BOOK	TRACED BY	
	DESIGNED BY	JFU
Iao/Kunia01	QUANTITIES BY	JFU
No.	CHECKED BY	JFU

DATE	REVISION
8/19/99	This sheet added to original contract plans

STATE OF HAWAII
DEPARTMENT OF TRANSPORTATION
HIGHWAYS DIVISION

KUNIA INTERCHANGE

APPROACH SLAB AND MISCELLANEOUS DETAILS

PLAN, ELEVATION AND DETAILS

KUNIA INTERCHANGE IMPROVEMENTS
Project No. IM-HI-1(219)

Scale: As Noted Date: Aug. 1999

SHEET No. 1 OF 1 SHEETS

CO133 S-3A

FED. ROAD DIST. NO.	STATE	FED. AID PROJ. NO.	FISCAL YEAR	SHEET NO.	TOTAL SHEETS
HAWAII	HAW.	~~IM-H1-K(219)~~ ~~ADD. 133 S-4~~	1998 ~~1966~~	40 ~~40~~	95 ~~95~~

IM-H1-K(219)
ADD. 133 S-4

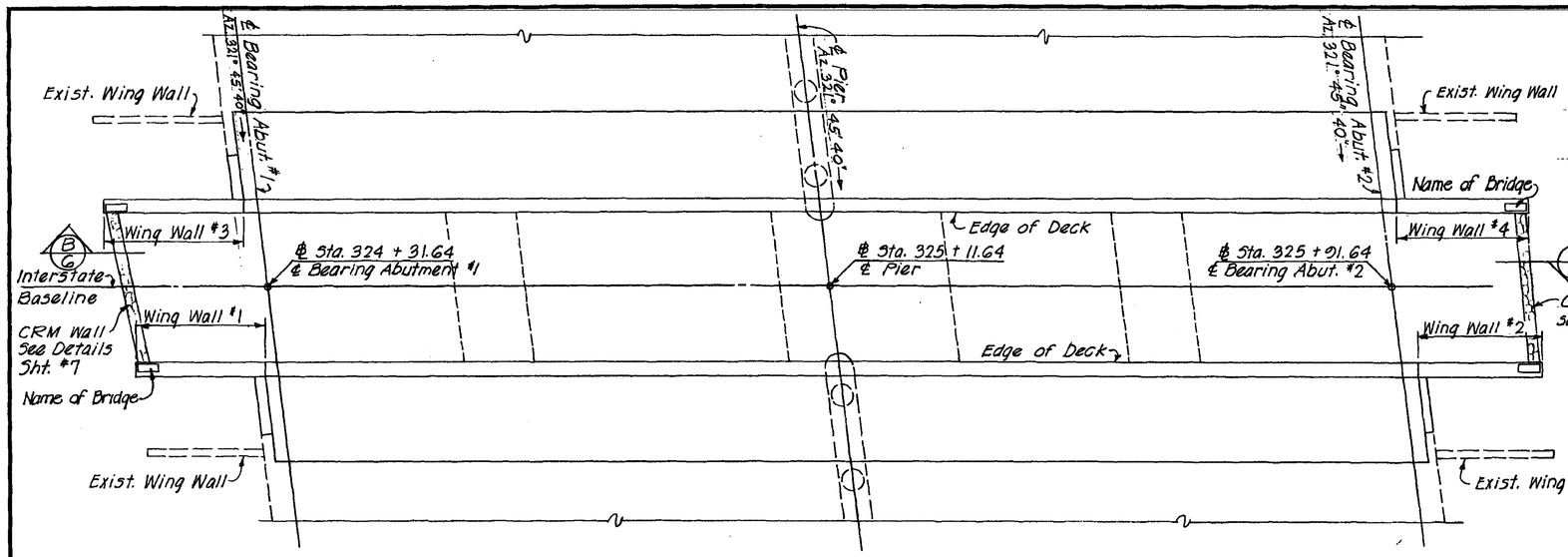

PART PLAN - BRIDGE WIDENING

Scale: 1" = 10'-0"

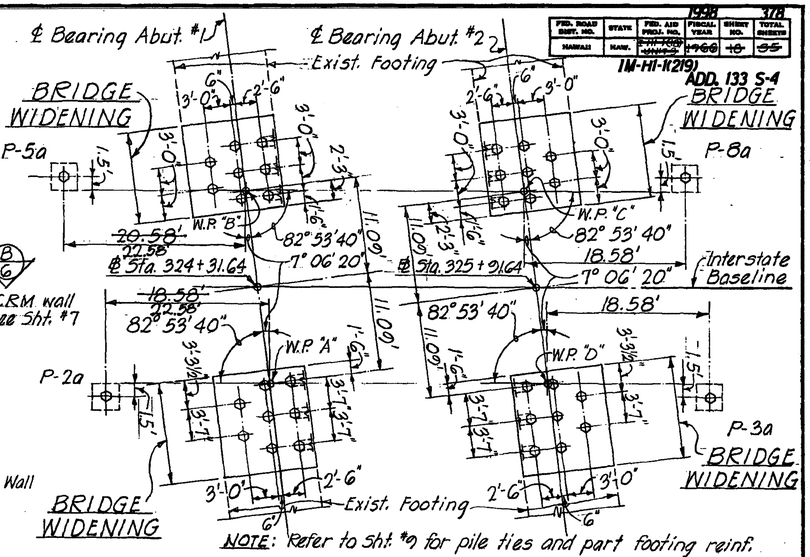

NOTE: Refer to Sht. #9 for pile ties and part footing reinf.

ABUTMENT PILE LAYOUT PLAN

Scale: 1/8" = 1'-0"

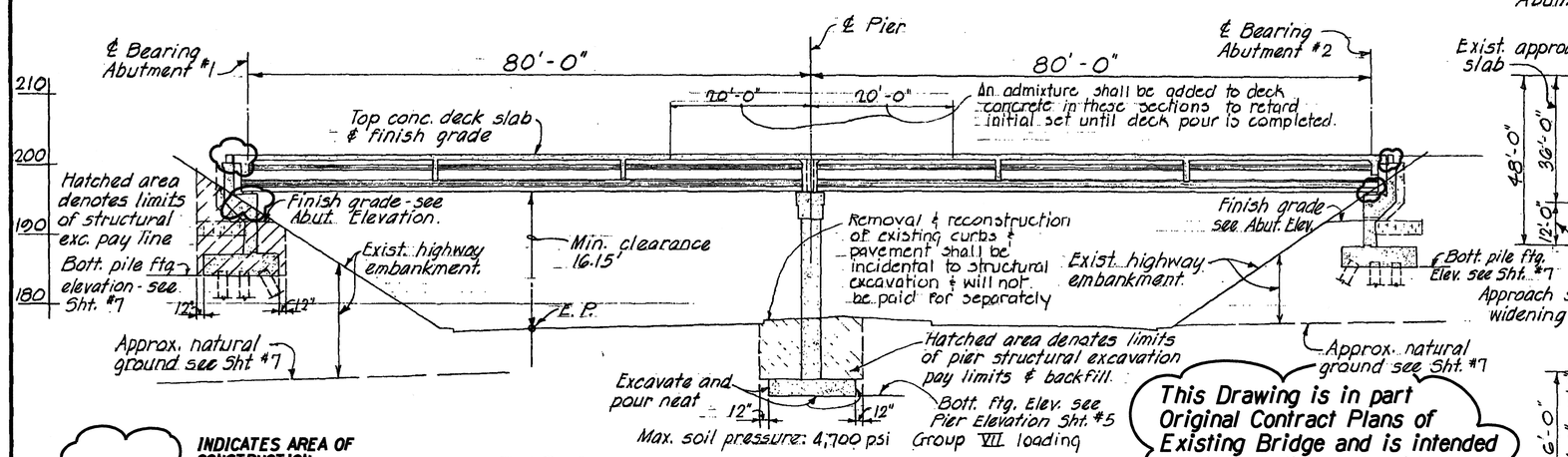

INDICATES AREA OF CONSTRUCTION

TYPICAL LONGITUDINAL SECTION INBOUND OR OUTBOUND BRIDGE WIDENING

Scale: 1" = 10'-0"

This Drawing is in part Original Contract Plans of Existing Bridge and is intended for information and guidance only. Drawings are not to scale.

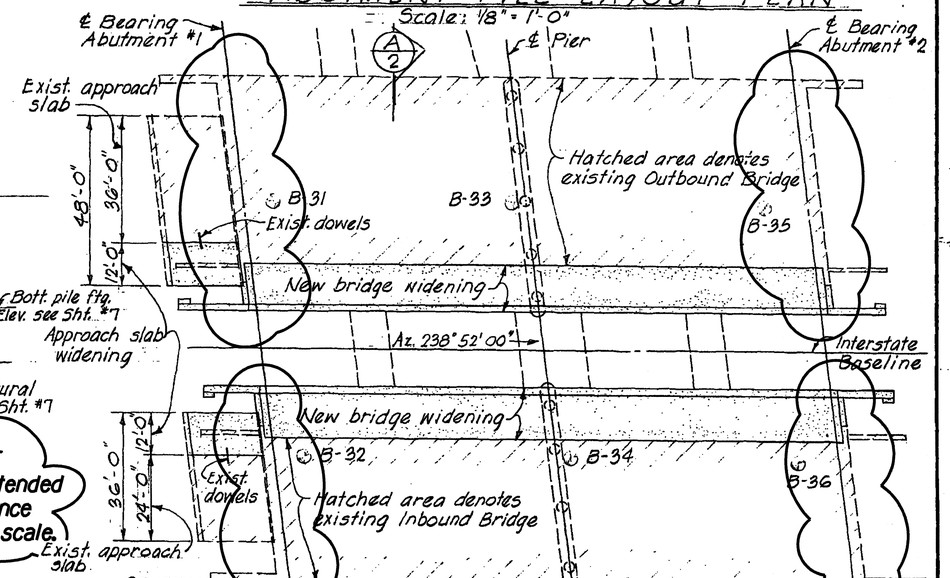

LAYOUT PLAN

Scale: 1" = 20'-0"

GENERAL
All Concrete Construction joints between existing structure and bridge widening shall be cleaned prior to pouring of new concrete

In general all horizontal & vertical grade control and location of new bridge widening to match existing shall be verified in field prior to construction.

REFERENCE NOTES:
For General Notes, Boring Logs & Miscellaneous Details see Sht. #9.
For additional details not shown on these drawings refer to Standard Detail Drawings Sht. #51, #55, #56, #59.

* See Special provisions for availability of metal bridge railing at State base yard.

PRESTRESSED CONCRETE PILE DATA

Location	Pile Cutoff El.	Vert. Pile Tip El.	Batter Pile Tip El.	Vert. Pile Length	Batter Pile Length
Inbound Abut. #1	El. 184.75	El. 158.25	El. 158.67	29 L.F.	29 L.F.
Outbound Abut. #1	El. 188.75	El. 162.25	El. 162.61	29 L.F.	29 L.F.
Inbound Abut. #2	El. 185.75	El. 167.25	El. 167.54	21 L.F.	21 L.F.
Outbound Abut. #2	El. 190.75	El. 171.25	El. 171.52	22 L.F.	22 L.F.
P-2a	El. 198.51	El. 158.01	—	43 L.F.	—
P-3a	El. 198.34	El. 169.84	—	31 L.F.	—
P-5a	El. 202.54	El. 162.04	—	43 L.F.	—
P-8a	El. 202.32	El. 166.82	—	38 L.F.	—

Symbols

Vertical Piles

Batter Piles
Direction of batter

All batter piles to be driven on a 2:12 slope.

DATE	REVISION
1-21-97	This sheet added to original contract plans.

ESTIMATED QUANTITIES

Class A-1 Concrete	Lump Sum	(297 CY)
Reinforcing Steel	Lump Sum	(63,658 LBS)
Prestressed Girder		644 LF
Structural Excavation		431.2 ~~551~~ CY
Filter Material		15.2 ~~6~~ CY
C.R.M.		14.7 CY
Metal Bridge Railing (Traffic Type)		389 LF*
Concrete Piles		960 ~~463~~ LF

STATE OF HAWAII
DEPARTMENT OF TRANSPORTATION
HIGHWAYS DIVISION

KUNIA INTERCHANGE ADDITION

IM-H1-K(219) JAN. 1998
PROJ. NO. ~~I-H1-K(48) UNIT 3~~ ~~SEPT. 1966~~

SHEET No. 7 OF 9 SHEETS

ESI 6

ORIGINAL PLAN	SURVEY PLOTTED BY	DRAWN BY	TRACED BY	DESIGNED BY	CHECKED BY	DATE
NOTE BOOK No.	NN	NN	VLK	VLK & WB	TO & KB	1966

PRINTED ON NO. 1000H CLEARPRINT

ADD. 133 S-4

FED. ROAD DIST. NO.	STATE	FED. AID PROJ. NO.	FISCAL YEAR	SHEET NO.	TOTAL SHEETS
HAWAII	HAW.	~~F-H-100 (3)~~ ~~CONTROL~~	~~1966~~ 1998	~~49~~ 49	~~55~~ 378

IM-HI-K(219)
ADD. 133 S-5

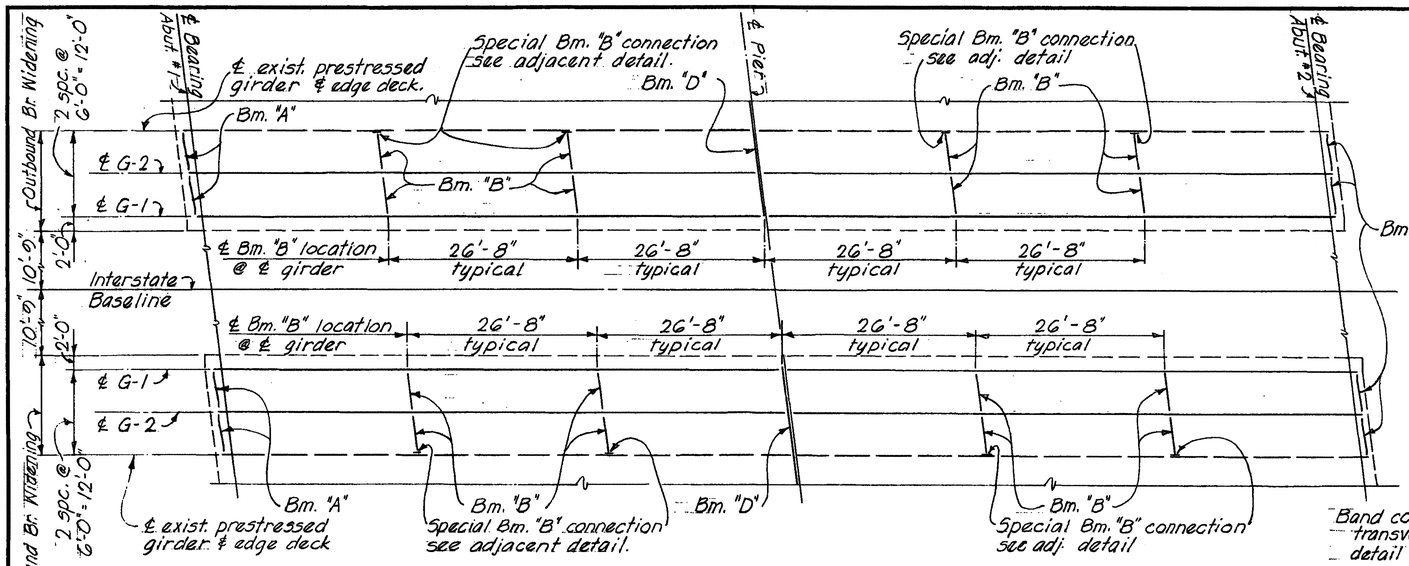

DECK FRAMING PLAN - INBOUND AND OUTBOUND BRIDGE WIDENING
Scale: 1" = 10'-0"

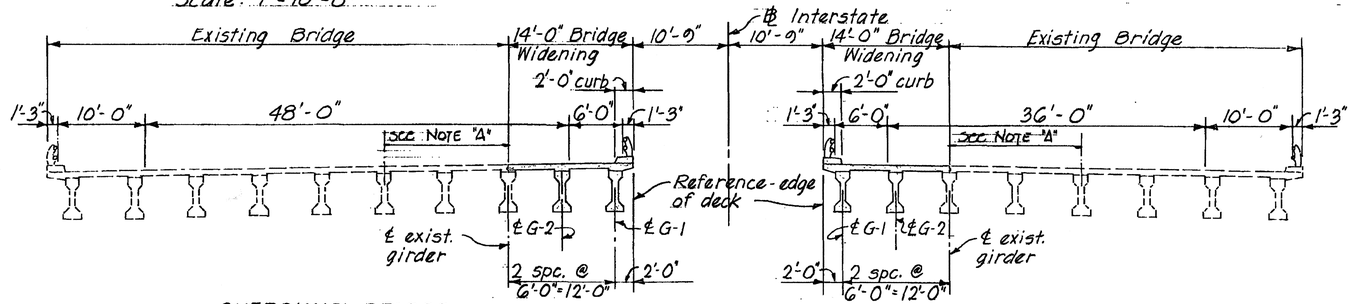

OUTBOUND BRIDGE

INBOUND BRIDGE

NOTE: For typical deck reinf. & additional details see Sht. #3

NORMAL DECK SECTION (A/2)
Scale: 1/8" = 1'-0"

NOTE "A": Truck traffic not permitted over this width until structure is completed.

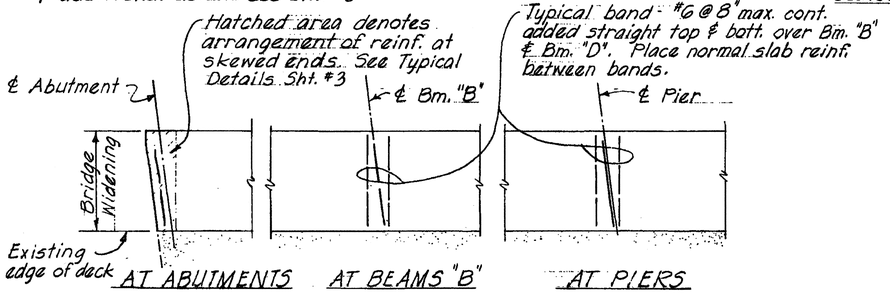

SPECIAL TOP SLAB REINFORCEMENT - INBOUND BRIDGE AS SHOWN
(OUTBOUND BRIDGE SIMILAR EXCEPT OPPOSITE HAND)

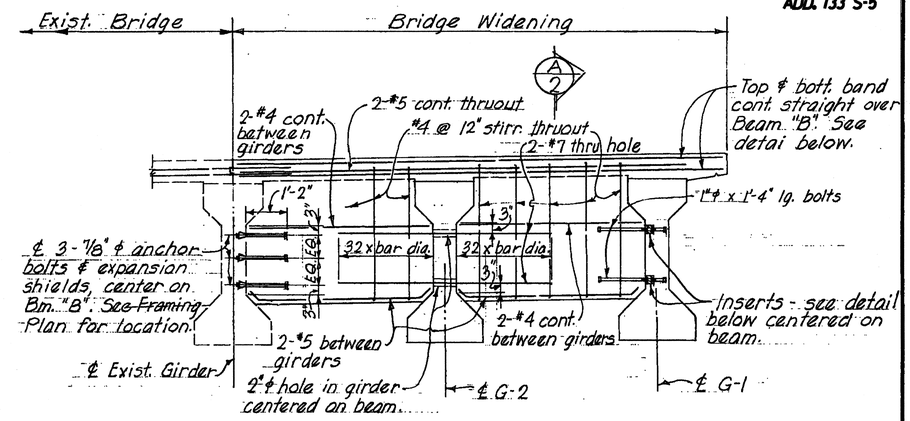

TYPICAL BEAM "B" DETAILS
Scale: 1/2" = 1'-0"

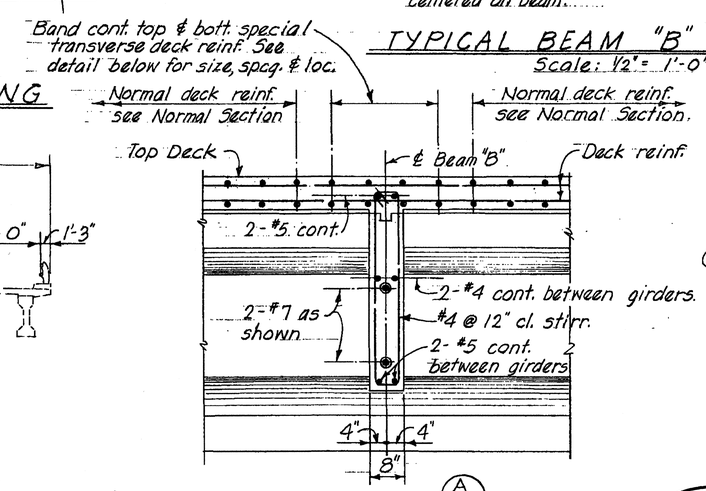

SECTION (A/2)
Scale: 3/4" = 1'-0"

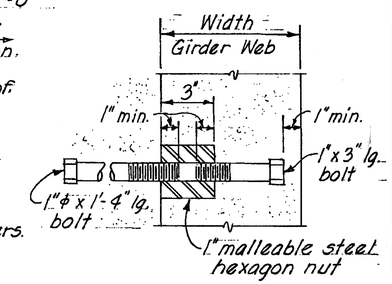

INSERT DETAIL
Scale: 3" = 1'-0"

This Drawing is in part Original Contract Plans of Existing Bridge and is intended for information and guidance only. Drawings are not to scale.

INDICATES AREA OF CONSTRUCTION

DATE	REVISION
1-21-98	This sheet added to original contract plans.

STATE OF HAWAII
DEPARTMENT OF TRANSPORTATION
HIGHWAYS DIVISION

KUNIA INTERCHANGE ADDITION

IM-HI-K(219)
PROJ. NO. ~~I-HI-(08) UNIT 3~~ ~~SEPT. 1966~~

SHEET No. ~~2~~ OF ~~3~~ SHEETS

ORIGINAL PLAN | SURVEY PLOTTED BY NY | TRACED BY | DESIGNED BY V.C. | NOTE BOOK No. | SURVEY BY | CHECKED BY NY | CHECKED BY W.S. | CHECKED BY J.B.E. P.J. | DATE 1/1/66

PRINTED ON NO. 1000H CLEARPRINT

ADD. 133 S-5 ES2 64

REV. #1 7/5/66 - Bridge Widening

FED. ROAD DIST. NO.	STATE	FED. AID PROJ. NO.	FISCAL YEAR	SHEET NO.	TOTAL SHEETS
HAWAII	HAW.	IM-H1-1(219)	1998	378	

ADD. 133 S-6

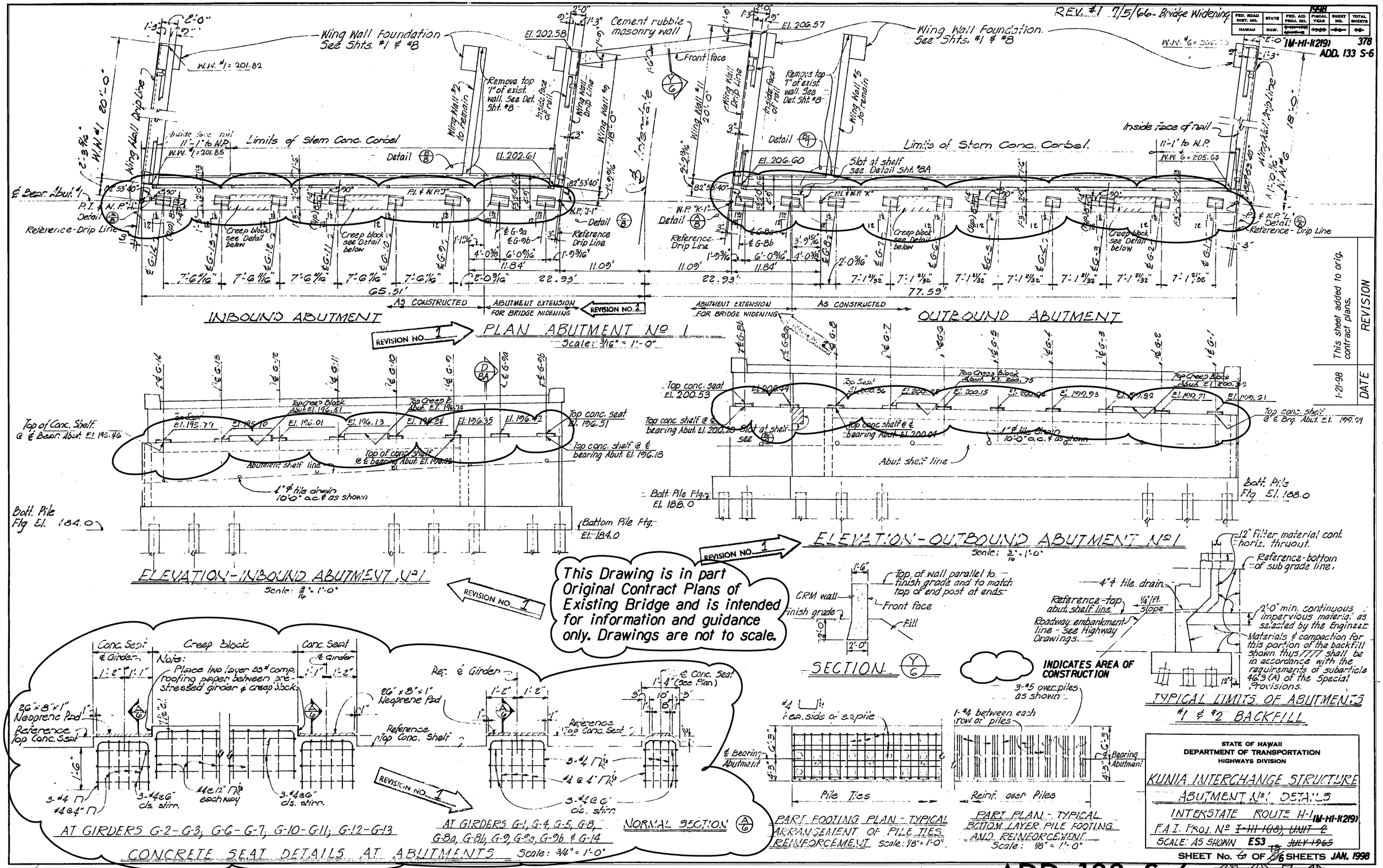

REVISION	DATE
This sheet added to orig. contract plans.	1-21-98

STATE OF HAWAII
DEPARTMENT OF TRANSPORTATION
HIGHWAYS DIVISION

KUNIA INTERCHANGE STRUCTURE
ABUTMENT No. 1 DETAILS
INTERSTATE ROUTE H-1 IM-H1-1(219)
F.A.I. PROJ. No. ~~I-H1-1(18), UNIT 2~~
SCALE: AS SHOWN ES3 ~~JULY 1965~~

SHEET No. 6 OF 6 SHEETS JAN. 1998

DRAWN BY
TRACED BY
DESIGNED BY
QUANTITIES BY
CHECKED BY
PLAN
NOTE BOOK No.

ADD. 133 S-6

REV. #1 - 7/5/66 - Bridge Widening

FED. ROAD DIST. NO.	STATE	FED. AID PROJ. NO.	FISCAL YEAR	SHEET NO.	TOTAL SHEETS
HAWAII	HAW.	~~F-[illegible]~~	~~19[illegible]~~	~~[illegible]~~	~~[illegible]~~
		IM-HI-K(219)	JAN. 1998	378	

ADD. 133 S-7

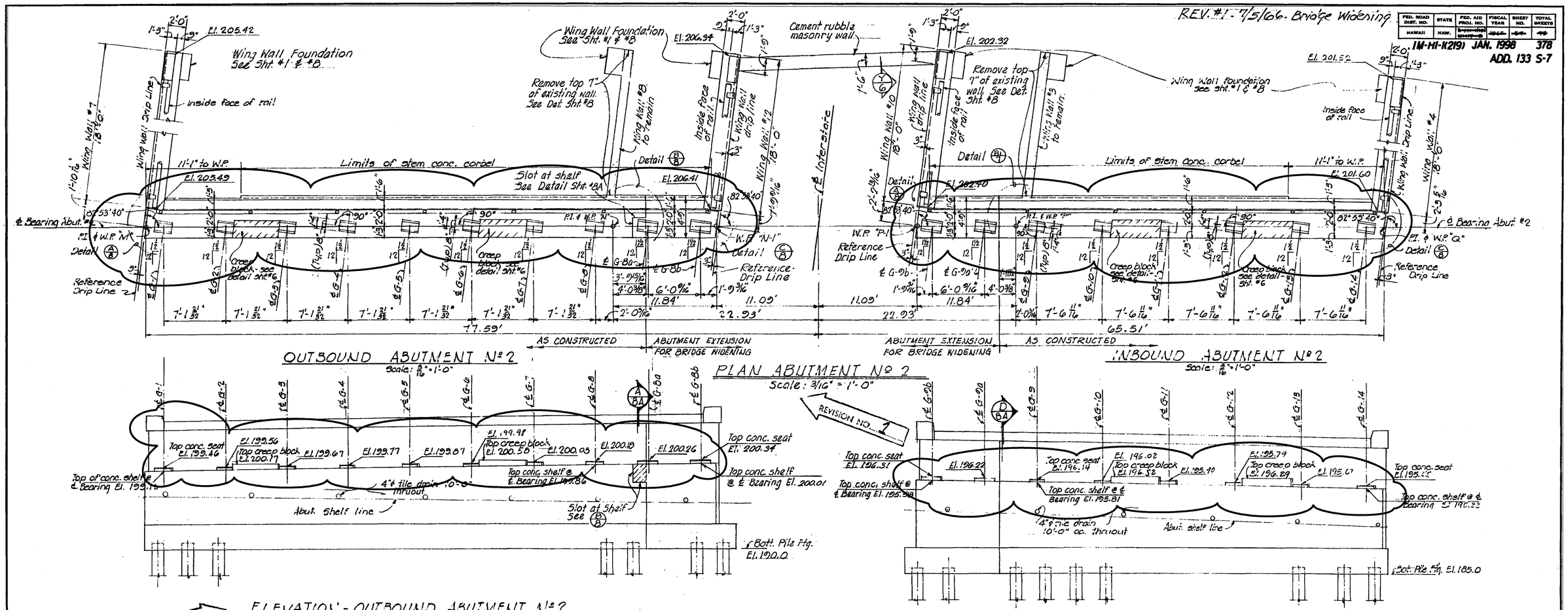

OUTBOUND ABUTMENT Nº 2
Scale: 3/16" = 1'-0"

PLAN ABUTMENT Nº 2
Scale: 3/16" = 1'-0"

INBOUND ABUTMENT Nº 2
Scale: 3/16" = 1'-0"

REVISION NO. 1

ELEVATION - OUTBOUND ABUTMENT Nº 2
Scale: 3/16" = 1'-0"

REVISION NO. 1

ELEVATION - INBOUND ABUTMENT Nº 2
Scale: 3/16" = 1'-0"

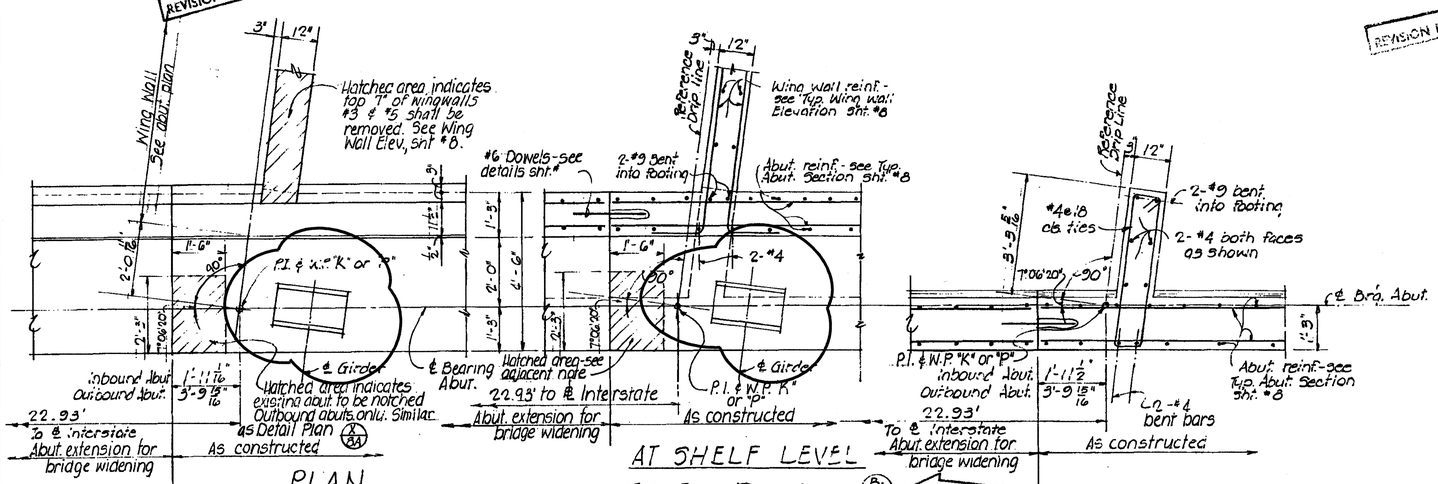

REVISION NO. 1

This Drawing is in part Original Contract Plans of Existing Bridge and is intended for information and guidance only. Drawings are not to scale.

INDICATES AREA OF CONSTRUCTION

DATE	REVISION
1-21-98	This sheet added to original contract plans.

STATE OF HAWAII
DEPARTMENT OF TRANSPORTATION
HIGHWAYS DIVISION

KUNIA INTERCHANGE STRUCTURE

ABUTMENT Nº 2 DETAILS

INTERSTATE ROUTE H-1

F.A.I. PROJ. Nº ~~I-H-1(16) UNIT 2~~ IM-HI-K(219)

SCALE: AS SHOWN ESA ~~6 JULY 1965~~

SHEET No. 7 OF 8 SHEETS JAN. 1998

ORIGINAL PLAN | SURVEY PLOTTED BY | DRAWN BY | TRACED BY | DESIGNED BY | QUANTITIES BY | CHECKED BY | DATE | NOTE BOOK No.

ADD. 133 S-7

FED. ROAD DIST. NO.	STATE	FED. AID PROJ. NO.	FISCAL YEAR	SHEET NO.	TOTAL SHEETS
HAWAII	HAW.	~~F-HI-1(8)~~ IM-HI-1(219)	~~1966~~ 1998	~~23~~ 378	~~35~~

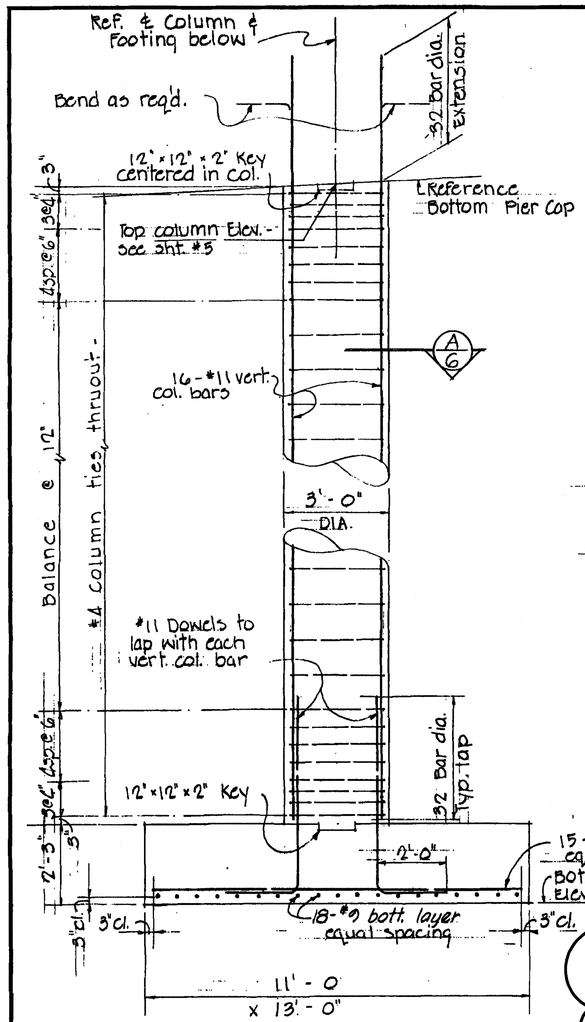

TYPICAL COLUMN DETAIL

SCALE: 1/2" = 1'-0"

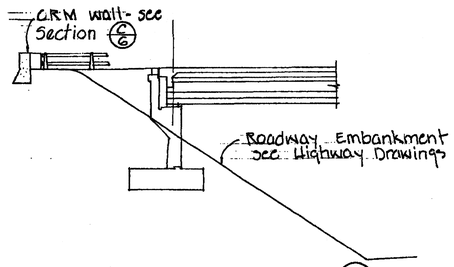

TYPICAL SECTION (B/6)

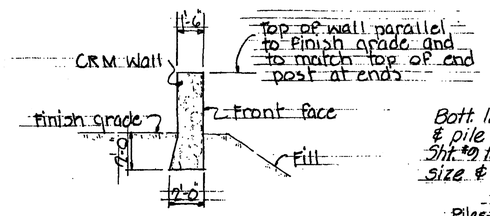

SECTION (C/6)

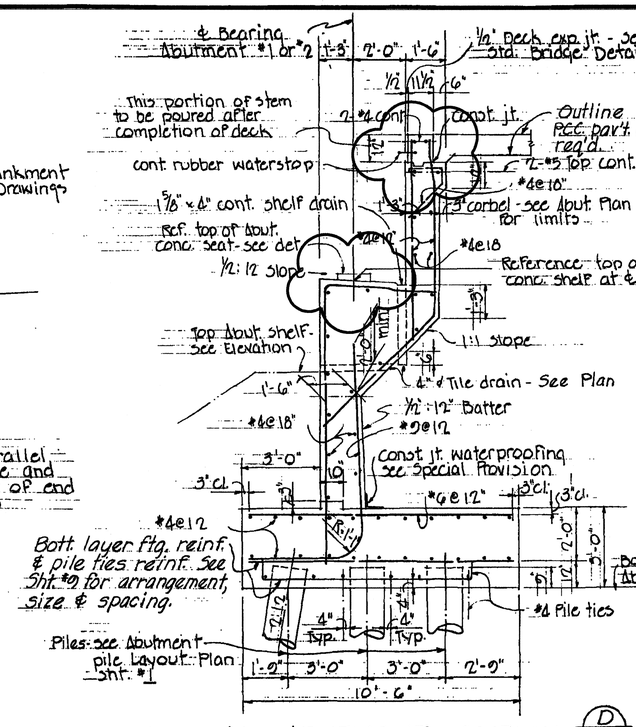

NORMAL ABUTMENT SECTION (D/6)

SCALE: 3/8" = 1'-0"

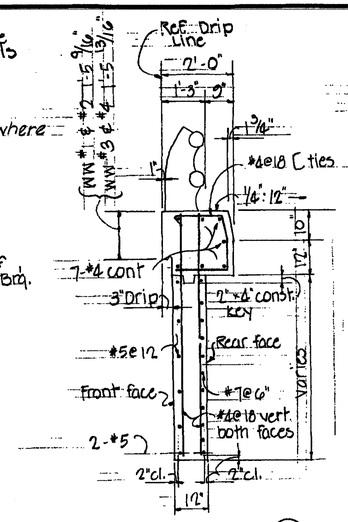

SECTION (F/6)

SCALE: 1/2" = 1'-0"

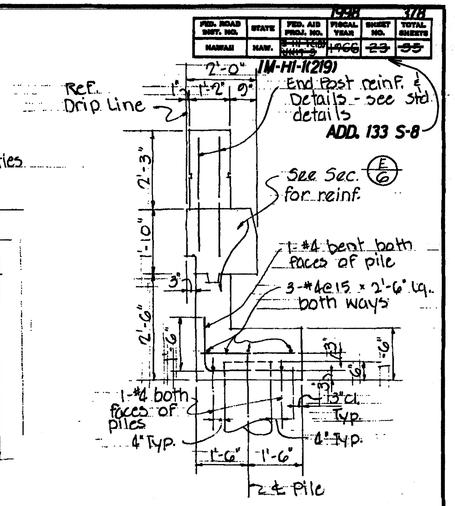

SECTION (F/6)

SCALE: 1/2" = 1'-0"

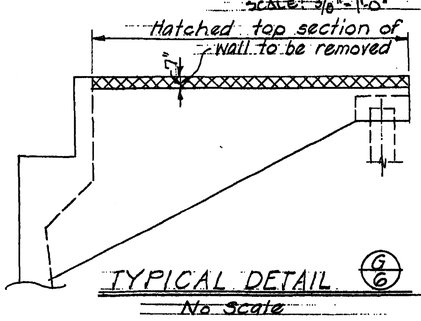

TYPICAL DETAIL (G/6)

No Scale

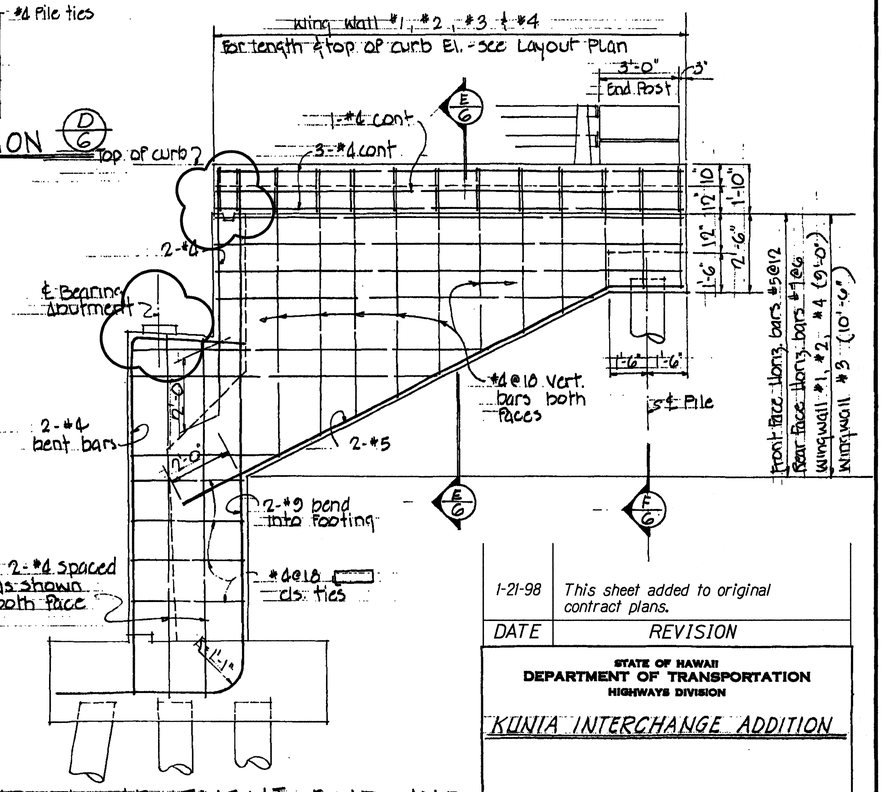

TYPICAL ABUTMENT END AND WING WALL ELEVATION

No Scale

This Drawing is in part Original Contract Plans of Existing Bridge and is intended for information and guidance only. Drawings are not to scale.

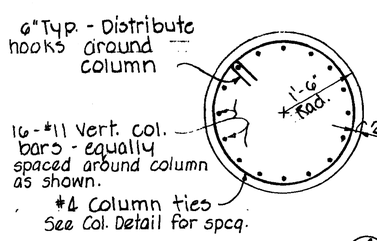

SECTION (A/6)

SCALE: 3/8" = 1'-0"

INDICATES AREA OF CONSTRUCTION

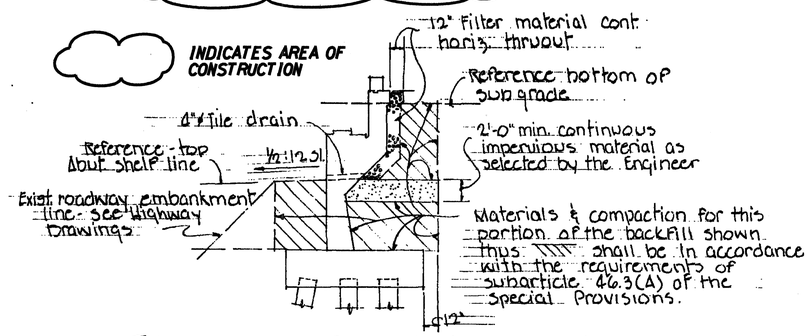

TYPICAL LIMITS OF ABUTMENTS #1 & #2 BACKFILL

DATE	REVISION
1-21-98	This sheet added to original contract plans.

STATE OF HAWAII
DEPARTMENT OF TRANSPORTATION
HIGHWAYS DIVISION

KUNIA INTERCHANGE ADDITION

IM-HI-1(219) JAN. 1998
PROJ. NO. ~~F-HI-1(8) UNIT 3~~ ~~SEPT 1966~~

SHEET No. ~~6~~ OF ~~9~~ SHEETS

ES5 ~~6-(6)~~ ~~(6)~~

ADD. 133 S-8

ORIGINAL PLAN	SURVEY PLOTTED BY	DATE
	DRAWN BY	
	TRACED BY	
	DESIGNED BY	
NOTE BOOK	QUANTITIES BY	
No.	CHECKED BY	

PRINTED ON NO. 1000H CLEARPRINT

FED. ROAD DIST. NO.	STATE	FED. AID PROJ. NO.	FISCAL YEAR	SHEET NO.	TOTAL SHEETS
HAWAII	HAW.	~~[illegible]~~	1998	~~[illegible]~~	378

IM-H1-1(219) ADD. 133 S-9

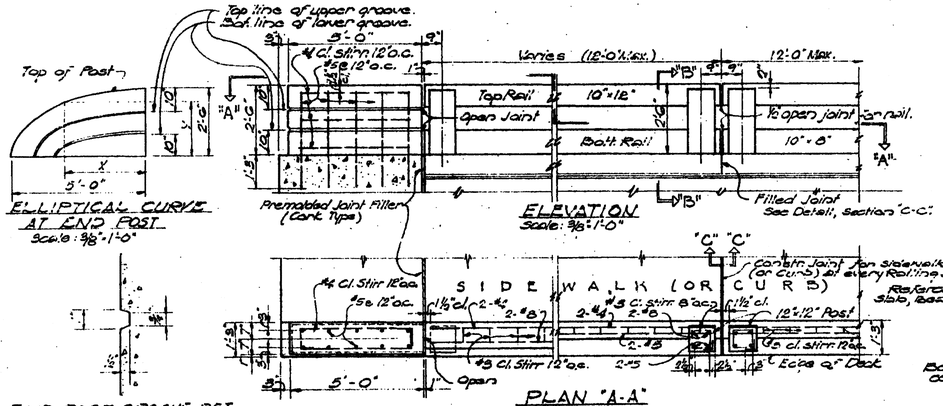

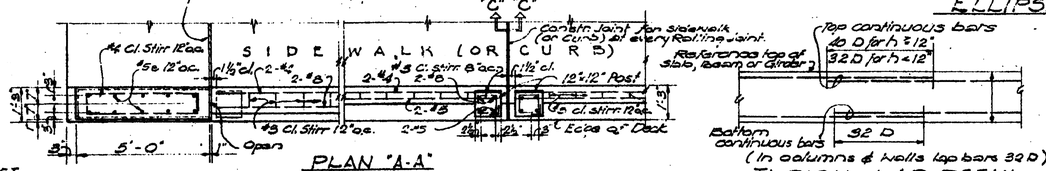

Top of Post

X	0	1'-0"	1'-6"	2'-0"	2'-6"	3'-0"	3'-6"	4'-0"	4'-3"	4'-6"	4'-9"	4'-10 1/2"	5'-0"
Y	2'-6"	2'-5 3/8"	2'-4 5/8"	2'-3 1/2"	2'-2"	2'-0"	1'-9 7/16"	1'-6"	1'-3 13/16"	1'-1 7/16"	0'-9 3/8"	6 11/16"	0"

Top Line of Upper Groove

X	0	6"	1'-0"	1'-6"	2'-0"	2'-6"	3'-0"	3'-3"	3'-6"	3'-9"	4'-0"	4'-1"	4'-2"
Y	1'-8"	1'-7 7/8"	1'-7 7/16"	1'-6 11/16"	1'-5 9/16"	1'-4"	1'-1 7/8"	1'-0 1/2"	10 7/8"	8 11/16"	5 5/8"	4"	0"

Bottom Line of Lower Groove

X	0	6"	1'-0"	1'-6"	2'-0"	2'-6"	2'-9"	3'-0"	3'-2"	3'-3"	3'-4"		
Y	10"	9 7/8"	9 9/16"	8 13/16"	8"	6 5/8"	5 5/8"	4 3/8"	3 1/8"	2 1/4"	0"		

ELLIPSE COORDINATES

NOTE:
Carbon content of reinforcing bars for welding shall not be over 0.40%. Low hydrogen electrodes E7015 or E7016 shall be used with preheat and interpass temperature not less than 200°F.

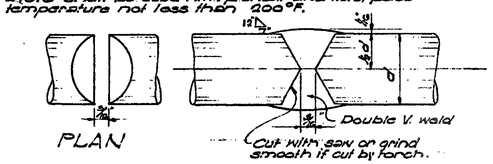

REINFORCING BAR SPLICE
Scale: Full Scale

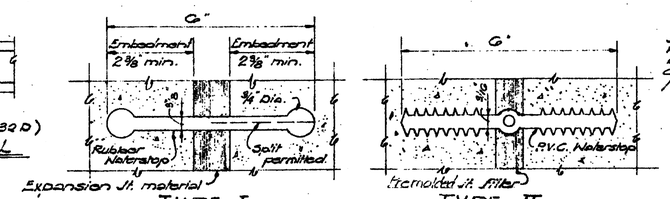

NOTE
For additional waterstop information see Special Provisions.

WATERSTOP DETAILS
Scale: Half Size

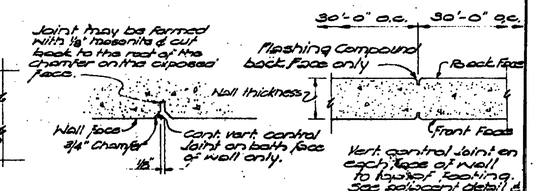

TYPICAL CONTROL JOINT OR ALTERNATE CONTRACTION JT DETAIL

NOTE:
Sidewalk, Curb and Railing to be poured after release of falsework. Forms for railing and end post to be made of plywood. Bottom forms for top rails shall be kept in place a minimum of 14 days from date of pour.

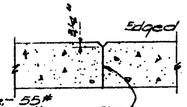

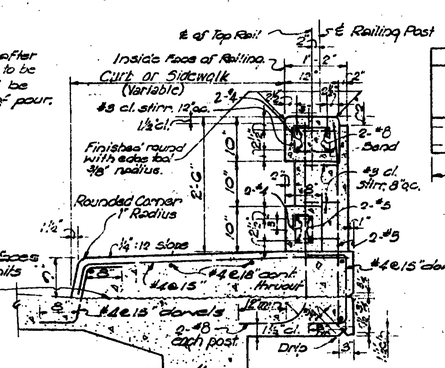

TYPICAL CONCRETE RAILING DETAILS Scale: As Noted

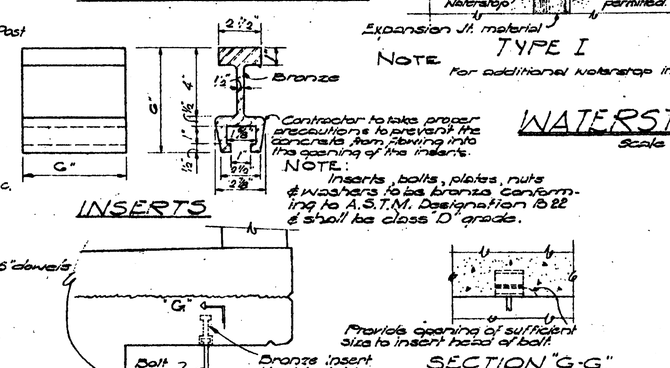

GENERAL NOTES

1 - Class of concrete to be used in different parts of the structure are as noted on plans.
2 - Clearance for reinforcing shall be as follows unless otherwise noted:

a - 1 1/2" for stirrups of beams & pier caps.
b - 2" for ties of column
c - 2" for formed walls.
d - 3" for footings.

3 - Concrete seats receiving steel plates, lead plates or neoprene pads shall be poured monolithically with supporting structures & top surfaces of the concrete seats shall be finished with a steel trowel to a smooth level at the elevation shown on the plans.
4 - Reinforcing shall be detailed in accordance with A.C.I. Manual of Standard Practice for Detailing Reinforced Concrete Highway Structures unless otherwise noted.
5 - Reinforcing bars shall be securely tied at all intersections & lap splices & shall be held in place during pouring to maintain their proper locations as shown on plans.
6 - Splicing of reinforcing shall be done as shown in above sketch except where shown otherwise. Splices are to be staggered. Splices in main bridge bars are permitted only in bars exceeding 60'-0" in length at points indicated by the Engineer. Splices to be electrically welded shall be according to detail & specifications. No allowance will be made in the quantities for extra weight of steel required for splices not shown on the plans.
Minimum spacing between parallel bars shall be 0 1/2 times the diameter of bars, but in no case shall the clear distance between the bars be less than 1 1/2 times the maximum size of the coarse aggregate.
All dimensions relating to reinforcing are to centers of bars unless otherwise noted.
7 - Forms for all exposed surfaces of separation structures including retaining walls (except round columns) shall be plywood. Forms for round columns shall be made of material that results in smooth finishes and true dimensions as shown on the plans. Forms for prestressed concrete members shall be either metal or plywood.
8 - Concrete finish - See Special Provisions.
9 - All welding shall conform to the latest Specifications for Welded Highway & Railway Bridge of the American Welding Society.
10 - Vertical column bars shall be arranged in such a manner as to miss pier cap bars above as directed by the Engineer.
11 - Except as otherwise noted on drawings all exterior corners & re-entrant angles in concrete work shall be chamfered 3/4" x 3/4". See Standard Specifications.

NOTE:
Metal drains shall be considered incidental to Class A-1 Concrete in both concrete and steel bridges and will not be paid for separately.
Assemblage of anchors and pipe shall be hot-dip galvanized after all welding is completed.

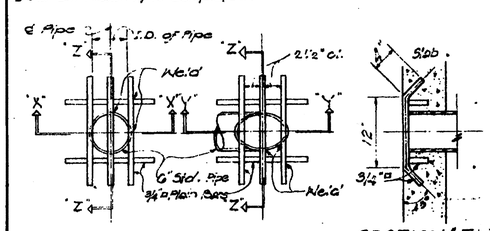

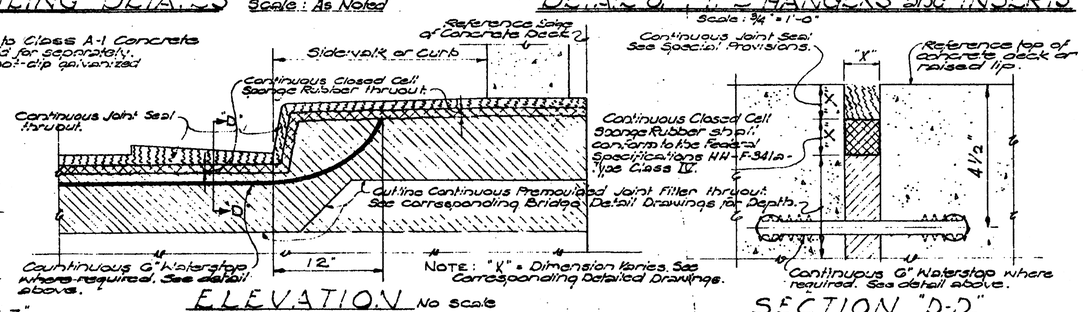

TYPICAL BRIDGE DECK EXPANSION JOINT DETAIL

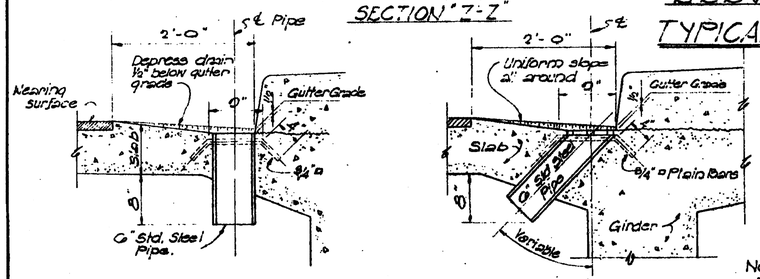

TYPICAL DRAINAGE DETAILS Scale: 1"=1'-0"

Depressed "V" Letters 3/8" deep.

NAME — Use correct name of bridge. LEFT HAND SIDE

DATE — Date of year built. RIGHT HAND SIDE

DETAIL OF LETTERS & FIGURES AT BOTH APPROACHES

NOTE: Name of bridge to be placed in left end post panels & date in right post panels on entering bridge using modified block letters 3" in height. In case of stream crossings use name of stream for name of bridge. For all others use name as designated by the Engineer.

This Drawing is in part Original Contract Plans of Existing Bridge and is intended for information and guidance only. Drawings are not to scale.

INDICATES AREA OF CONSTRUCTION

DATE	REVISION
1-21-98	This sheet added to original contract plans.

STATE OF HAWAII
DEPARTMENT OF TRANSPORTATION
HIGHWAYS DIVISION

STANDARD BRIDGE DETAILS

Proj. No. IM-H1-1(219)

JAN. 1998
~~April 6, 1964~~ ES6 6

SHEET No. ~~9-2~~ OF ~~3~~ SHEETS

ADD. 133 S-9

ORIGINAL PLAN	DRAWN BY	TRACED BY	DESIGNED BY	QUANTITIES BY	CHECKED BY
NOTE BOOK	No.				

FED. ROAD DIST. NO.	STATE	FED. AID PROJ. NO.	FISCAL YEAR	SHEET NO.	TOTAL SHEETS
HAWAII	HAW.	IM-HI-1(219)	1998	134	378

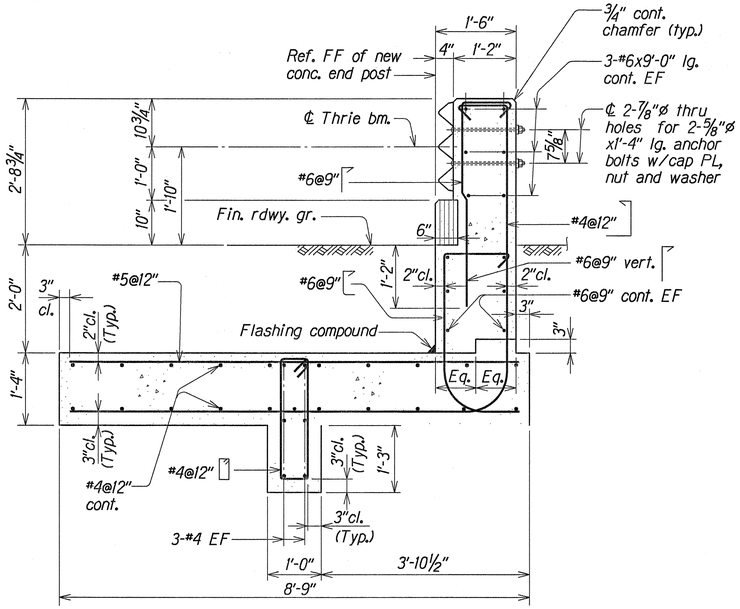

SECTION A R24 R25
Scale: 3/4"=1'-0"

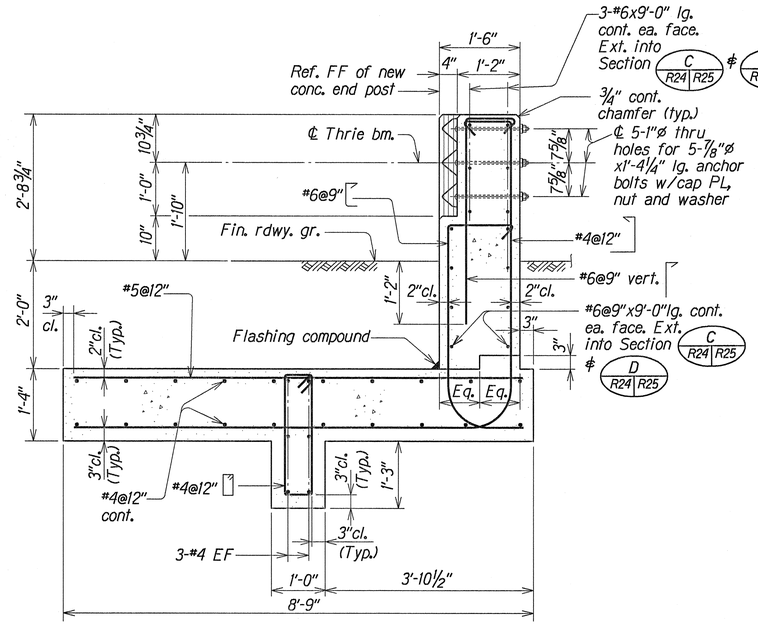

SECTION B R24 R25
Scale: 3/4"=1'-0"

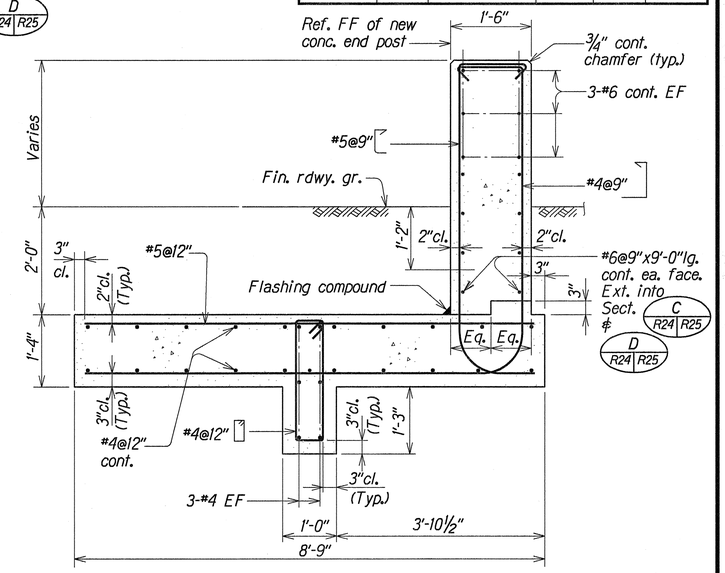

SECTION C R24 R25
Scale: 3/4"=1'-0"

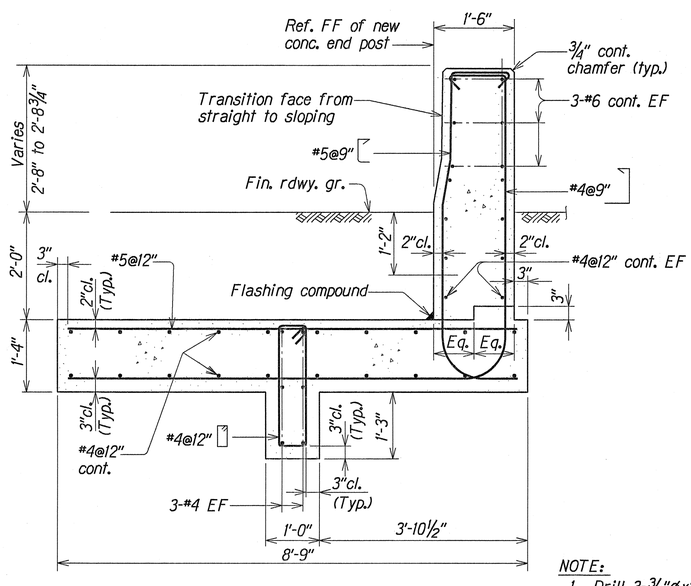

SECTION D R24 R25
Scale: 3/4"=1'-0"

NOTE:
1. Drill 3-3/4"øx2'-0" deep holes (o) into existng end post for 3-5/8"øx4'-0" lg. #5 dowels. Secure dowels with epoxy grout.

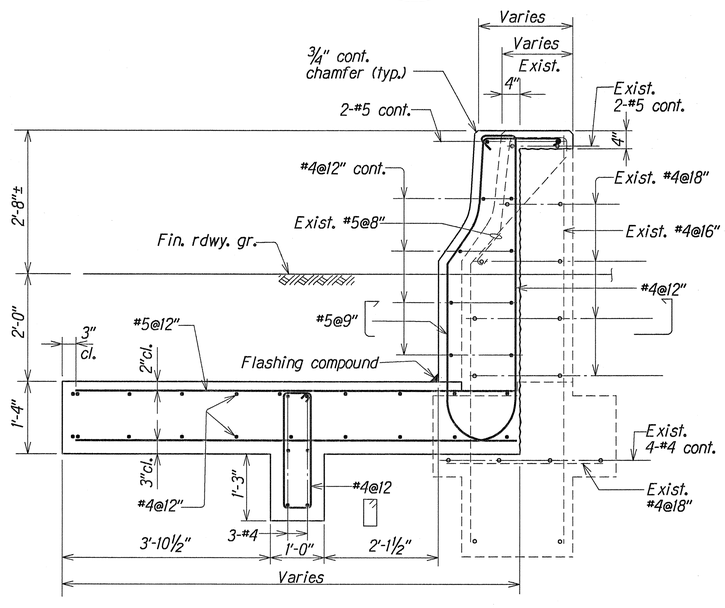

SECTION E R24 R25
Scale: 3/4"=1'-0"

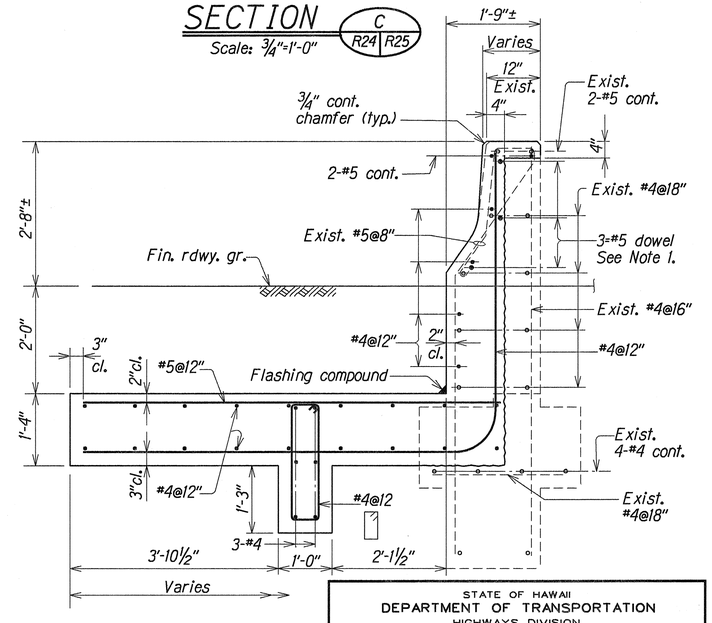

SECTION F R24 R25
Scale: 3/4"=1'-0"

STATE OF HAWAII
DEPARTMENT OF TRANSPORTATION
HIGHWAYS DIVISION

KUNIA INTERCHANGE WALLS

TYPICAL TYPE "A" END POST UPGRADE DETAILS

KUNIA INTERCHANGE IMPROVEMENTS
Vicinity of Waipahu Street to Waiawa Road
Federal Aid Project No. IM-HI-1(224)

Scale: As Noted — Date: Nov. 1997

ORIGINAL PLAN	SURVEY PLOTTED BY	TKM, LMA	OCT 1997
	DRAWN BY		
	TRACED BY		
NOTE BOOK	DESIGNED BY	JFU	OCT 1997
	QUANTITIES BY	JFU	OCT 1997
	CHECKED BY	DCO	OCT 1997

SHEET No. R25 OF 30 SHEETS

FED. ROAD DIST. NO.	STATE	FED. AID PROJ. NO.	FISCAL YEAR	SHEET NO.	TOTAL SHEETS
HAWAII	HAW.	IM-HI-1(219)	1997	135	378

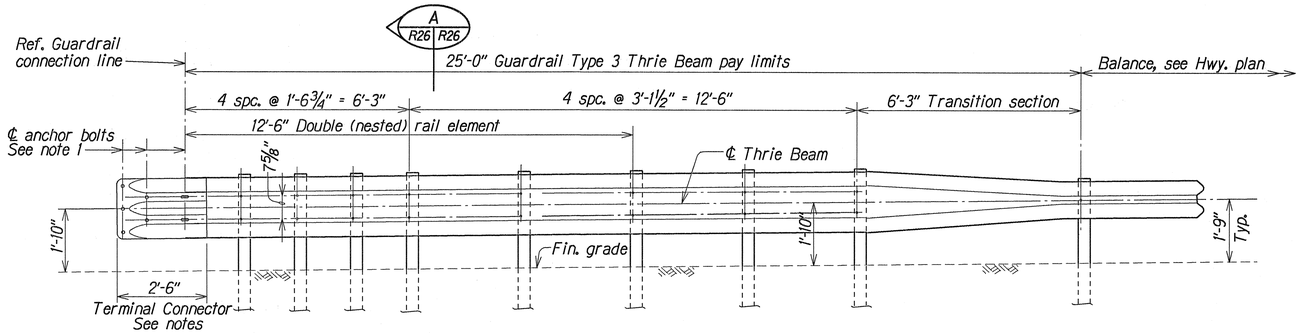

ELEVATION

TYPICAL TYPE 3 THRIE BEAM METAL GUARDRAIL UPGRADE

Scale: ½"=1'-0"

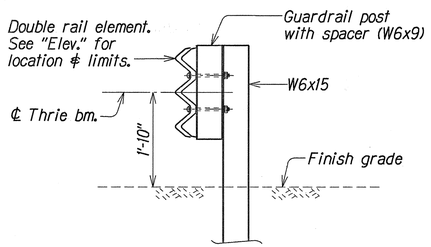

TYPICAL SECTION

A R26 R26

Scale: ¾"=1'-0"

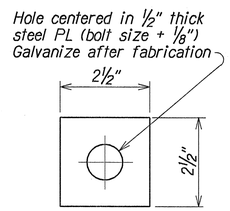

CAP PLATE DETAIL

Scale: 6" = 1'-0"

GUARDRAIL CONNECTION NOTES:

1. The work necessary to connect guardrail to concrete end post shall include all labor, materials, tools, equipment and incidentals necessary to complete the work and shall be incidental to the metal guardrail and will not be paid for separately.
2. "Terminal Connector" shall be fabricated from 10 gage steel conforming to the requirements of AASHTO M 180.
3. "Terminal Connector" including all anchor bolts, cap plates, nuts and washers shall be hot-dip galvanized after fabrication.
4. Existing structure shown by hatched lines.
5. Limits of removal of existing structure shown by x-hatched lines.
6. Saw cut 1" deep along cut line of existing structure.
7. Removal shall be done in such a manner as to preclude any damage to the existing structure.
8. Large vibratory type of equipment will not be permitted in the removal operations, nor for drilling of holes. Only small vibratory hand tools approved by the Engineer will be allowed.
9. All existing reinforcing and anchor bolts that can be incorporated in the new work shall be bent or cut as required and cleaned before being utilized in the new work.
10. All existing reinforcing or anchor bolts that cannot be incorporated in the new work shall be completely removed or removed to a minimum depth of 1½ inches below finish grade and the area patched with mortar.
11. Terminal connector and accessories will be considered incidental to item No. 606.3110 - Guardrail, Type 3 thrie beam with steel post.
12. Metal spacer block shall be W6x9. Guardrail post shall be W6x15. For other guardrail details, see "DOT Standard Plan" #TE-57 for Type 3 thrie beam guardrail details. See "DOT Standard Plan" #TE-50 and #TE-51 for W beam metal guardrail details. Lap terminal connector and rail element in direction of traffic to prevent snagging.

ORIGINAL PLAN			DATE
	SURVEY PLOTTED BY	CHO	OCT 1994
	DRAWN BY		
NOTE BOOK	TRACED BY		OCT 1994
	DESIGNED BY	LS	OCT 1994
	QUANTITIES BY	LS	OCT 1994
No.	CHECKED BY	MST	OCT 1994

STATE OF HAWAII
DEPARTMENT OF TRANSPORTATION
HIGHWAYS DIVISION

KUNIA INTERCHANGE WALLS

METAL GUARDRAIL DETAILS

KUNIA INTERCHANGE IMPROVEMENTS
Federal Aid Project No. IM-HI-1(219)

Scale: As Noted — Date: Nov. 1997

SHEET No. R26 OF 30 SHEETS

FED. ROAD DIST. NO.	STATE	FED. AID PROJ. NO.	FISCAL YEAR	SHEET NO.	TOTAL SHEETS
HAWAII	HAW.	IM-HI-1(219)	1998	136	378

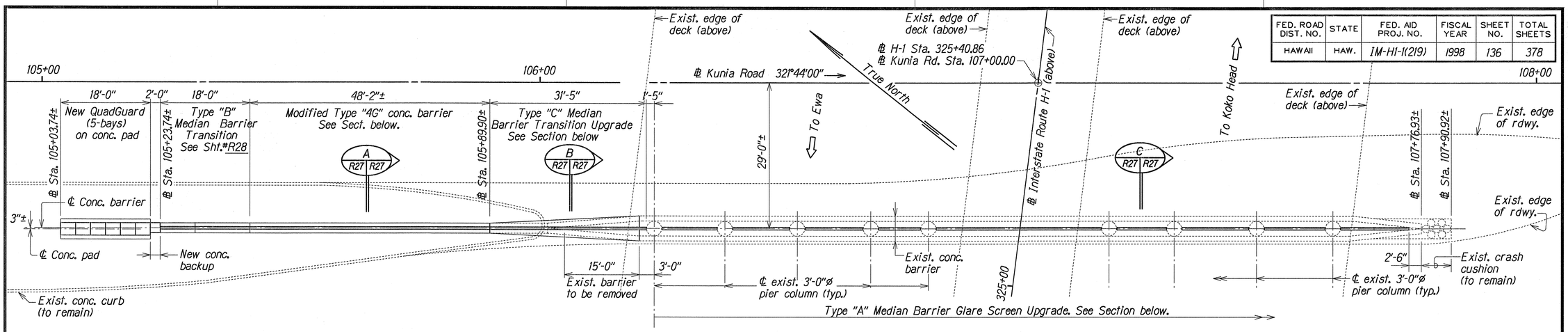

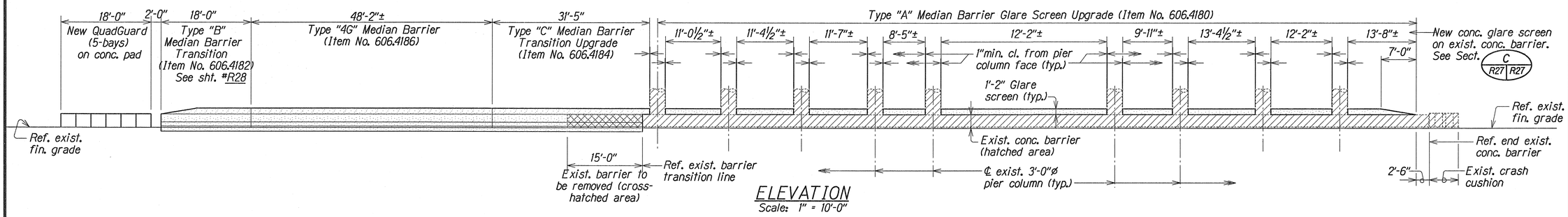

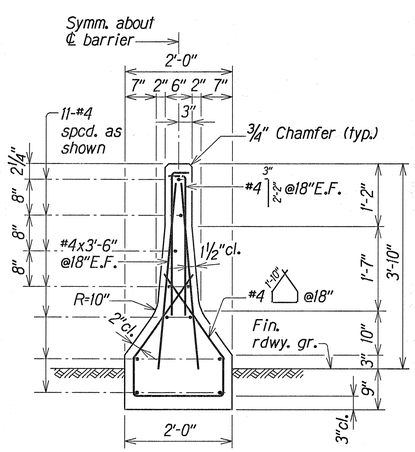

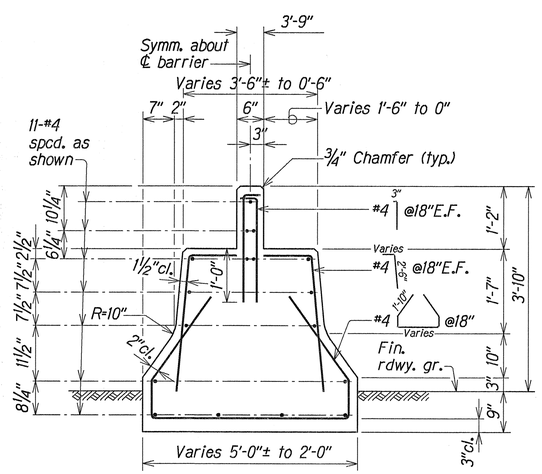

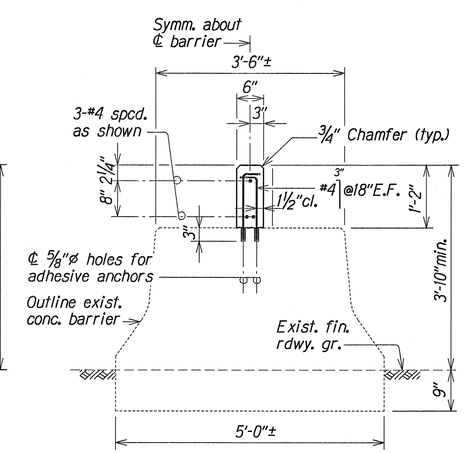

NOTES:

1. Existing concrete surface to be bonded with the new concrete shall be thoroughly wetted with clean water and scrubbed with a solution of not more than one-part hydrochloric (muriatic) acid to nine-parts water followed immediately by thorough rinsing with clean water.
2. The Contractor shall be responsible for the location of existing reinforcement by whatever means including the use of scanning devices in his drilling operations.
3. The top surface of the concrete glare screen shall not vary by more than ¼" from the lower edge of a ten (10) foot long straight edge. Where the ground beneath the barrier has settled, the glare screen shall be increased as necessary (to more than 1'-2") to meet the above requirement.
4. Joints on glare screen to match existing barrier joints.

ORIGINAL PLAN		DATE
	SURVEY PLOTTED BY	
	DRAWN BY KSG	JUN 1997
	TRACED BY	
NOTE BOOK	TRANSCRIBED BY JFU	JUN 1997
	DESIGNED BY JFU	JUN 1997
	QUANTITIES BY JFU	JUN 1997
N. Ahlhorn	CHECKED BY DCO	JUN 1997

STATE OF HAWAII
DEPARTMENT OF TRANSPORTATION
HIGHWAYS DIVISION

KUNIA INTERCHANGE WALLS
CONCRETE MEDIAN BARRIER UNDER KUNIA SEPARATION PLAN, ELEVATION & SECTIONS

KUNIA INTERCHANGE IMPROVEMENTS
Project No. IM-HI-1(219)

Scale: As Noted — Date: Nov. 1997

SHEET No. R27 OF 30 SHEETS

FED. ROAD DIST. NO.	STATE	FED. AID PROJ. NO.	FISCAL YEAR	SHEET NO.	TOTAL SHEETS
HAWAII	HAW.	IM-HI-1(219)	1998	137	378

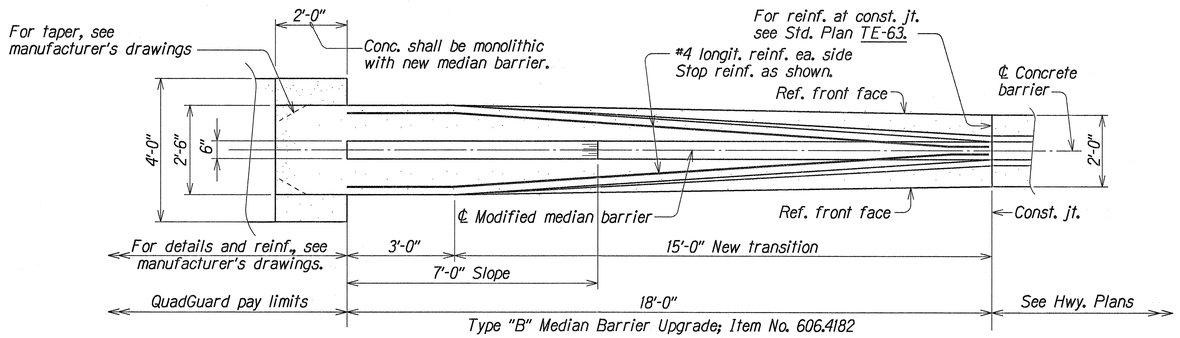

PARTIAL PLAN

Scale: ½"=1'-0"

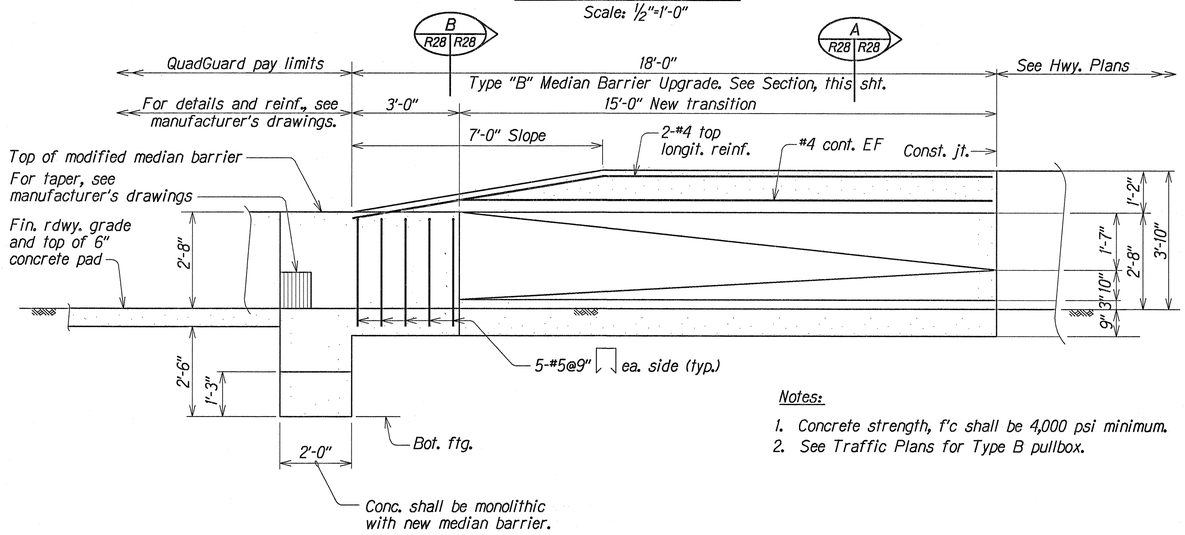

Notes:

1. Concrete strength, f'c shall be 4,000 psi minimum.
2. See Traffic Plans for Type B pullbox.

PARTIAL ELEVATION

Scale: ½"=1'-0"

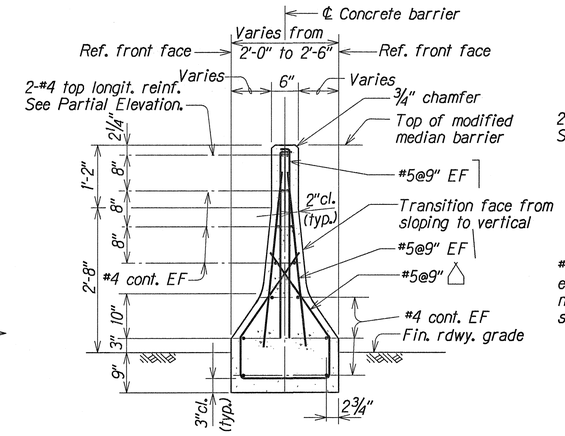

SECTION A R28 R28

Scale: ¾"=1'-0"

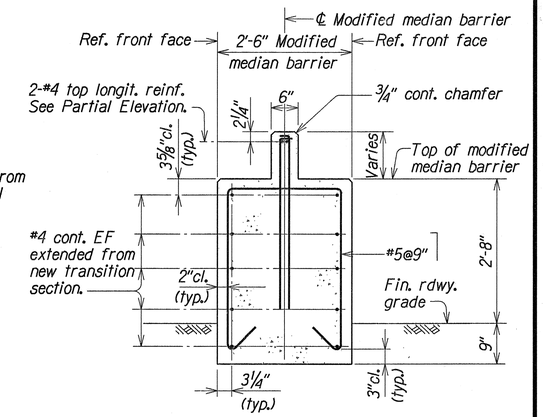

SECTION B R28 R28

Scale: ¾"=1'-0"

ORIGINAL PLAN		SURVEY PLOTTED BY	T.K.M.	DATE JUN 1997
		DRAFTED BY		
		TRACED BY	T.K.M.	JUN 1997
NOTE BOOK		DESIGNED BY		JUN 1997
		QUANTITIES BY	J.F.U.	JUN 1997
N.	Oct 98	CHECKED BY	J.F.U.	JUN 1997

STATE OF HAWAII
DEPARTMENT OF TRANSPORTATION
HIGHWAYS DIVISION

KUNIA INTERCHANGE WALLS

TYPE "B" MEDIAN BARRIER UPGRADE
PLAN, ELEVATION AND DETAILS

KUNIA INTERCHANGE IMPROVEMENTS
Project No. IM-HI-1(219)

Scale: As Noted — Date: Nov. 1997

FED. ROAD DIST. NO.	STATE	FED. AID PROJ. NO.	FISCAL YEAR	SHEET NO.	TOTAL SHEETS
HAWAII	HAW.	IM-HI-1(219)	1998	138	378

NOTES:

1. See Hwy. Plan for location of work.
2. Refer to Sht. #R1 for general notes.

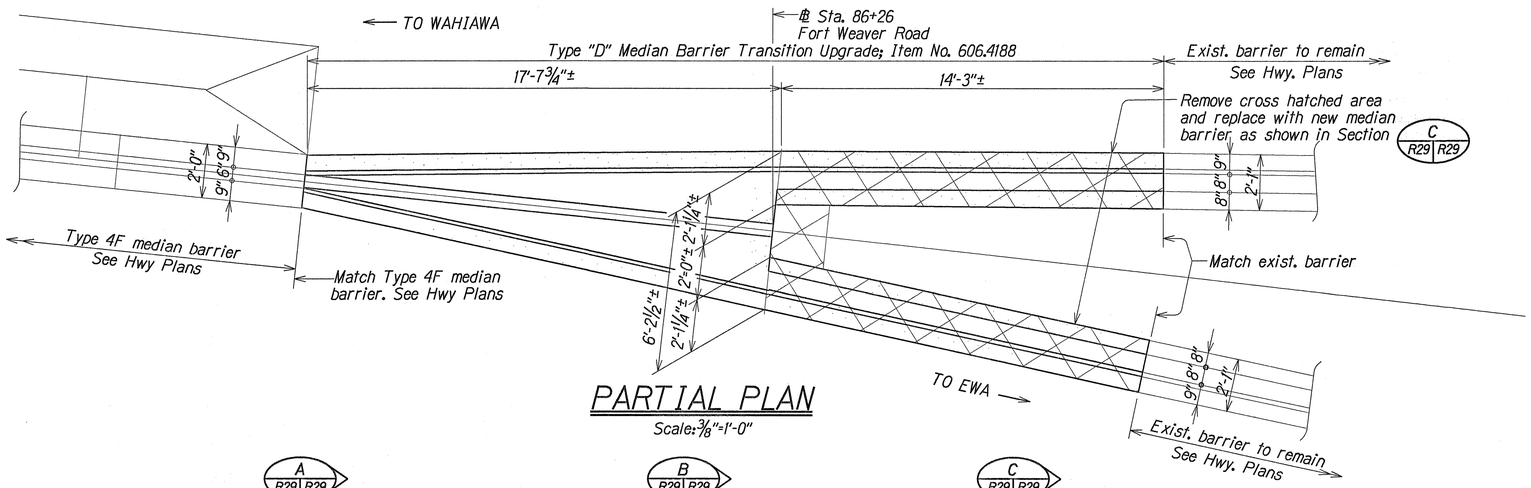

PARTIAL PLAN

Scale: ⅜"=1'-0"

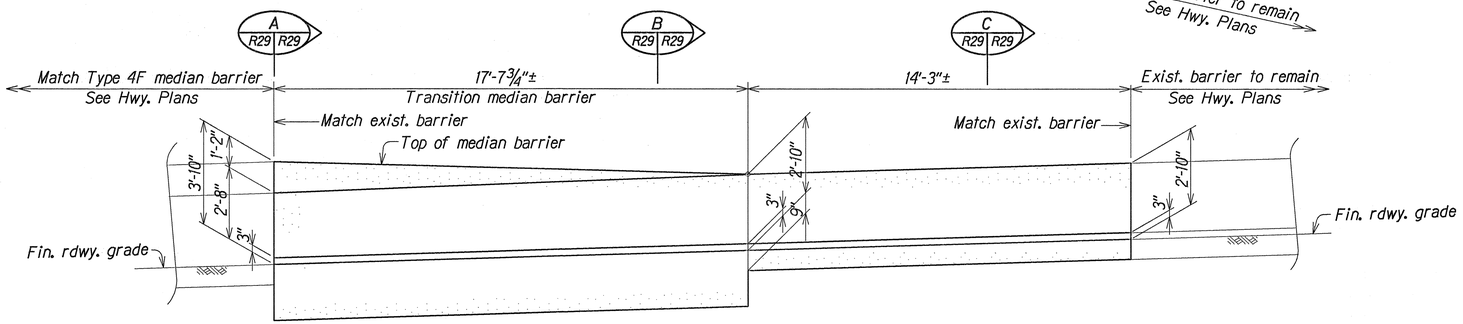

PARTIAL ELEVATION
(SHOWING TO EWA BARRIER)

Scale: ⅜"=1'-0"

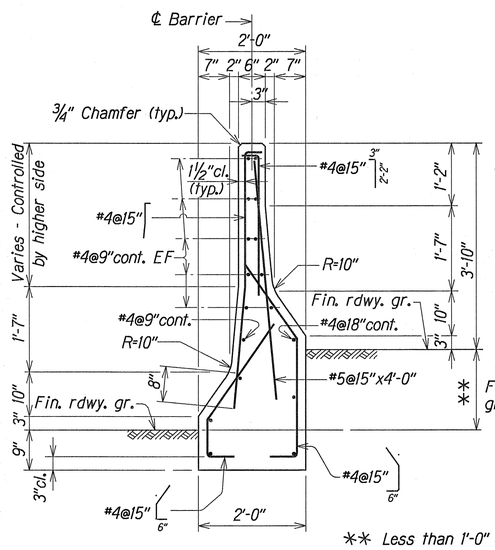

SECTION A R29 R29

Scale: ¾"=1'-0"

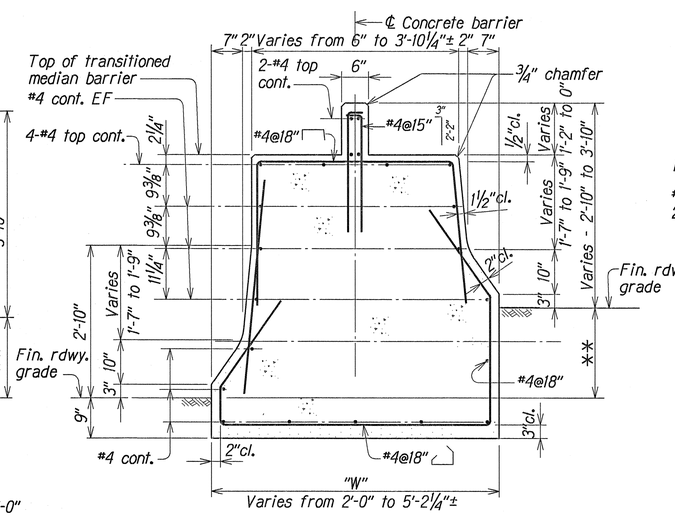

SECTION B R29 R29

Scale: ¾"=1'-0"

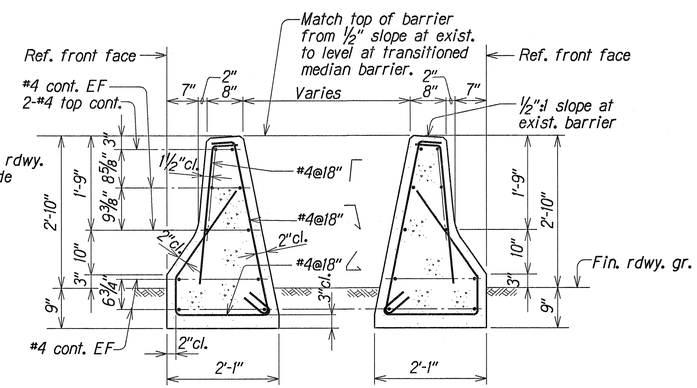

SECTION C R29 R29

Scale: ¾"=1'-0"

STATE OF HAWAII
DEPARTMENT OF TRANSPORTATION
HIGHWAYS DIVISION

KUNIA INTERCHANGE WALLS

MODIFIED MEDIAN BARRIER PLAN, ELEVATION AND DETAILS

KUNIA INTERCHANGE IMPROVEMENTS
Project No. IM-HI-1(219)

Scale: As Noted — Date: Nov. 1997

SHEET No. R29 OF 30 SHEETS

ORIGINAL PLAN	SURVEY PLOTTED BY	TKM	JUN 1997
	DRAWN BY		
	TRACED BY		JUN 1997
NOTE BOOK	DESIGNED BY	JFU	JUN 1997
	QUANTITIES BY	JFU	JUN 1997
No. 07-19-99	CHECKED BY	DCO	JUN 1997

FED. ROAD DIST. NO.	STATE	FED. AID PROJ. NO.	FISCAL YEAR	SHEET NO.	TOTAL SHEETS
HAWAII	HAW.	IM-H1-1(219)	1998	C.O.139	378

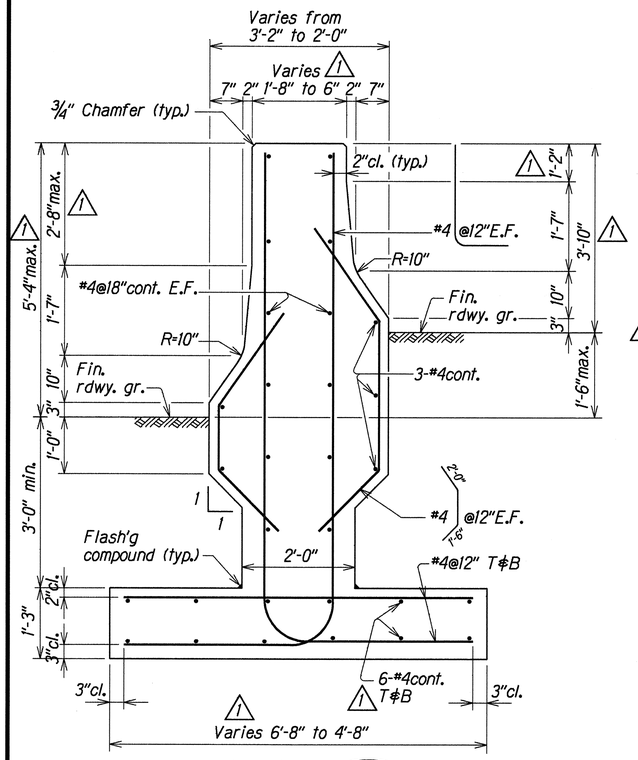

SECTION A
Scale: 3/4" = 1'-0"

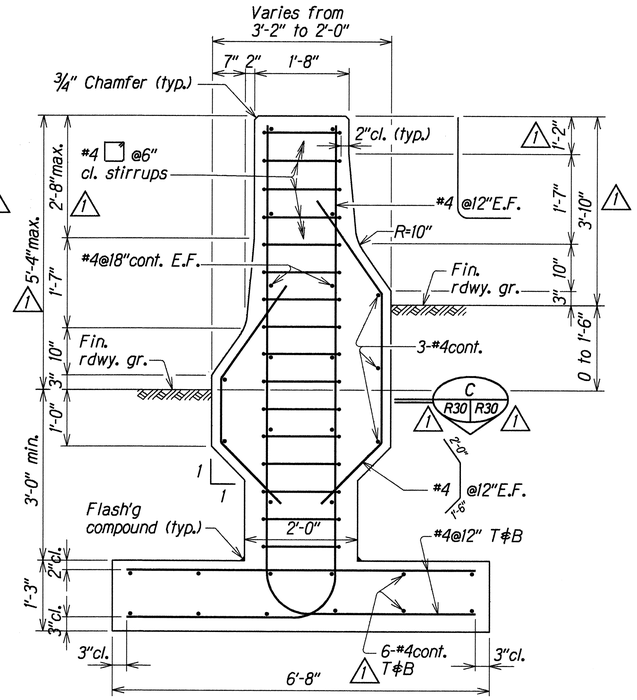

SECTION B
Scale: 3/4" = 1'-0"

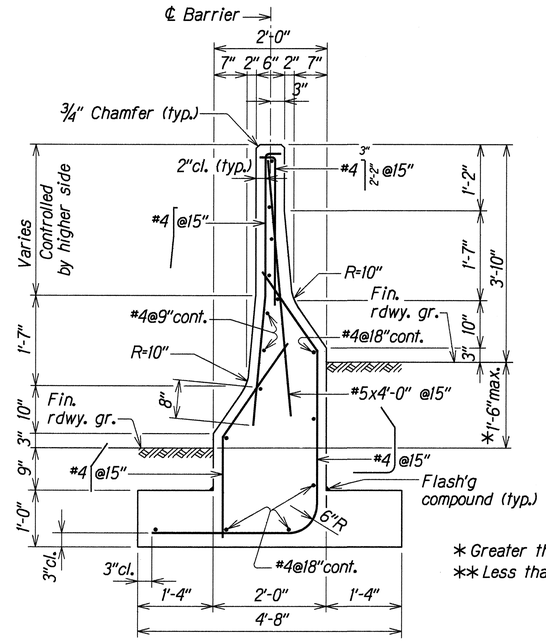

SECTION
TYPE "4F" CONCRETE GUARDRAIL
Scale: 3/4" = 1'-0"

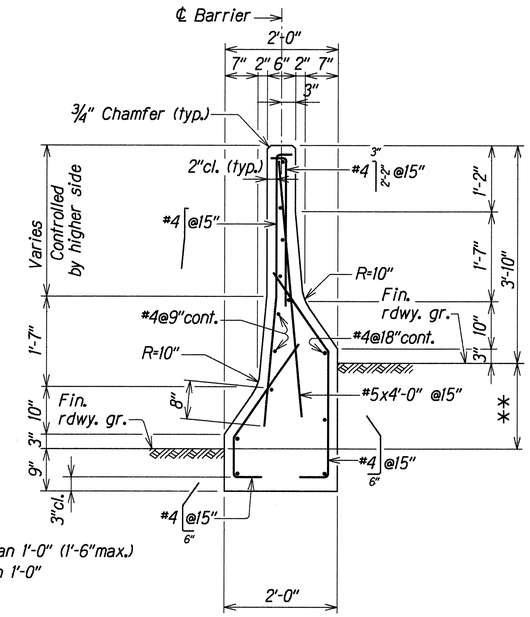

* Greater than 1'-0" (1'-6"max.)
** Less than 1'-0"

SECTION
TYPE "4E" CONCRETE GUARDRAIL
Scale: 3/4" = 1'-0"

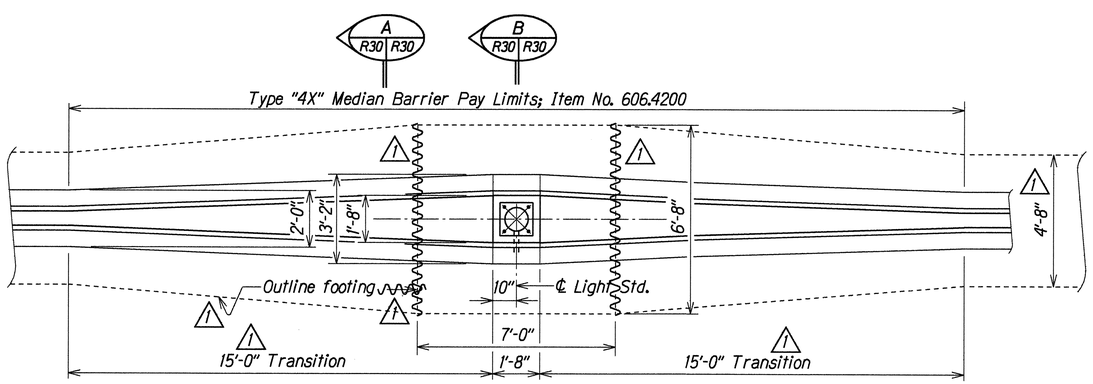

PLAN
Not to Scale

TYPE "4X" CONCRETE GUARDRAIL
AT HIGHWAY LIGHTING STANDARD

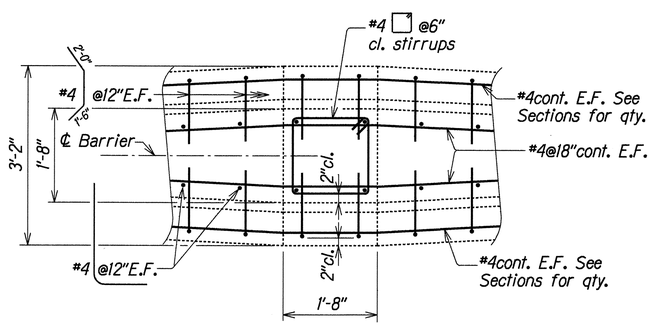

SECTION C
Scale: 3/4" = 1'-0"

DATE	DESCRIPTION
5-11-99	1 Change in lengths, reinf. count and ftg. outline

STATE OF HAWAII
DEPARTMENT OF TRANSPORTATION
HIGHWAYS DIVISION

KUNIA INTERCHANGE WALLS
CONCRETE GUARDRAIL
PARTIAL PLAN AND SECTIONS
KUNIA INTERCHANGE IMPROVEMENTS
Project No. IM-H1-1(219)

Scale: As Noted — Date: Nov. 1997

SHEET No. R30 OF 30 SHEETS

C.O. 139

ORIGINAL PLAN — SURVEY PLOTTED BY KSG — DATE JUN 1997
FINAL PLAN — DRAWN BY FJF — DATE FEB 1998
NOTE BOOK — TRACED BY FJF — DATE FEB 1998
DESIGNED BY — QUANTITIES BY — CHECKED BY
No. 00