FED. ROAD DIST. NO.	STATE	FED. AID PROJ. NO.	FISCAL YEAR	SHEET NO.	TOTAL SHEETS
HAWAII	HAW.	IM-HI-1(219)	1998	222	378

WARNING:
PROJECT SITE CONTAINS EXISTING ELECTRICAL LINES (BOTH OVERHEAD & UNDERGROUND), ENERGIZED AT VARIOUS LOW (BELOW 600V) AND MEDIUM VOLTAGES. THE CONTRACTOR SHALL ASSUME THAT THOSE LINES CANNOT BE DE-ENERGIZED AND SHALL INCLUDE IN HIS WORK SUCH EQUIPMENT/ MATERIALS/ PROCEDURES/ METHODS OF CONSTRUCTION TO PROTECT HIS EMPLOYEES, THE PUBLIC, EMPLOYEES OF THE STATE & UTILITIES, AND ANY EXISTING UTILITIES, FACILITIES, ETC.

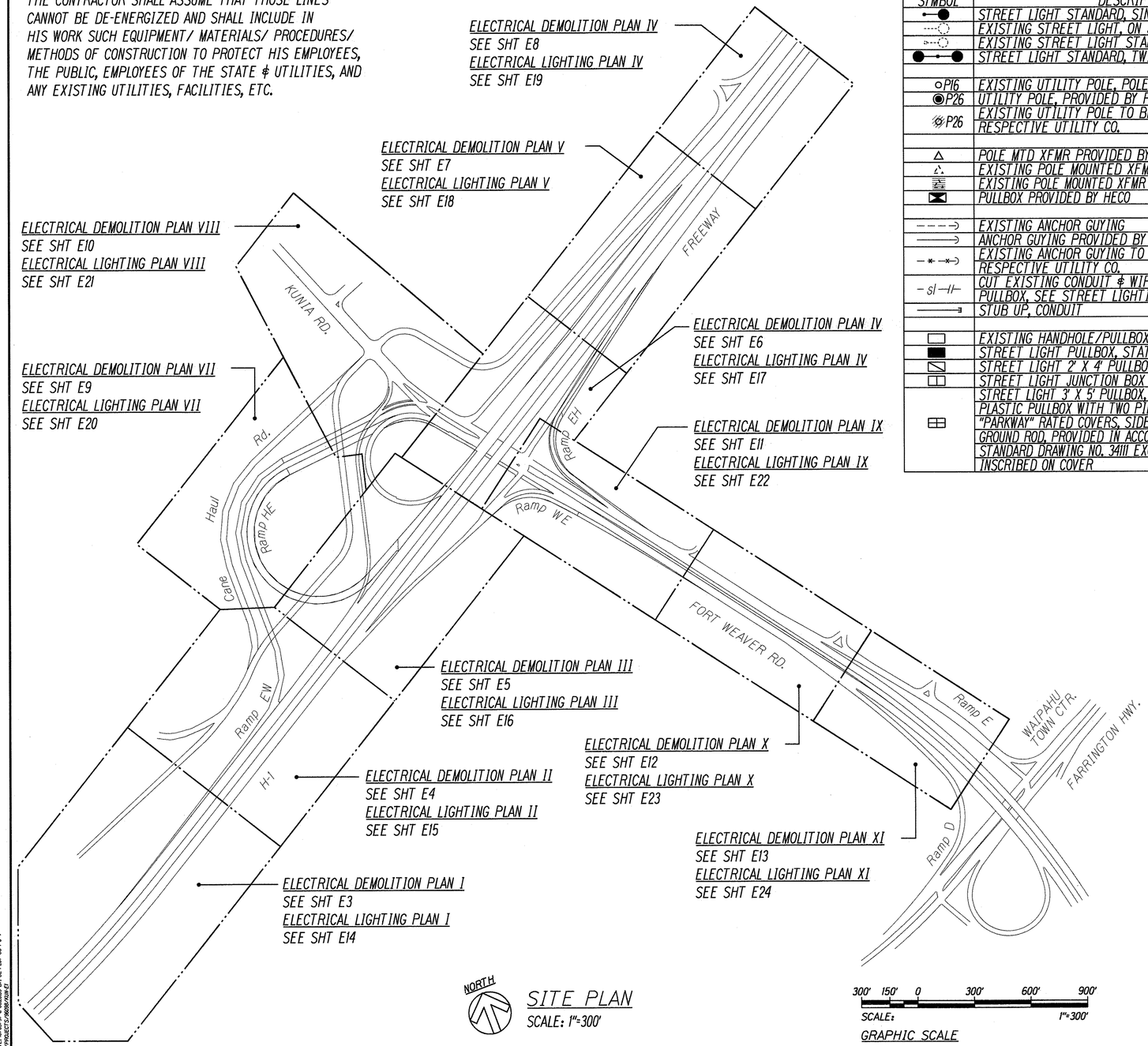

SITE PLAN
SCALE: 1"=300'

ELECTRICAL SYMBOLS

SYMBOL	DESCRIPTION	SYMBOL	DESCRIPTION
	STREET LIGHT STANDARD, SINGLE LUMINAIRE ARM	—e/ug—	EXISTING UNDERGROUND DUCTLINES
	EXISTING STREET LIGHT, ON JOINT POLE	—x—e/ug—x—	EXISTING UNDERGROUND DUCTLINES TO BE REMOVED
	EXISTING STREET LIGHT STANDARD	—e/oh—	EXISTING OVERHEAD ELECTRICAL/SIGNAL LINES
	STREET LIGHT STANDARD, TWIN LUMINAIRE ARM	—x—e/oh—x—	EXISTING OVERHEAD ELECTRICAL/SIGNAL LINES TO BE REMOVED BY RESPECTIVE UTILITY CO
P16	EXISTING UTILITY POLE, POLE #16 INDICATED	—E/OH—	OVERHEAD ELECTRICAL/SIGNAL LINES TO BE PROVIDED BY RESPECTIVE UTILITY CO
P26	UTILITY POLE, PROVIDED BY RESPECTIVE UTILITY CO.		
P26	EXISTING UTILITY POLE TO BE REMOVED BY RESPECTIVE UTILITY CO.	—L—	STREET LIGHT DUCT & WIRING, SEE DUCT SECTION FOR SIZE & TYPE
		—t/oh—	EXISTING OVERHEAD SIGNAL LINES
	POLE MTD XFMR PROVIDED BY HECO	—T/OH—	OVERHEAD SIGNAL LINES TO BE PROVIDED BY HTCO
	EXISTING POLE MOUNTED XFMR		
	EXISTING POLE MOUNTED XFMR TO BE REMOVED BY HECO	—sl—	EXISTING STREET LIGHT DUCTLINE & WIRING
	PULLBOX PROVIDED BY HECO		CONDUIT BELOW GRADE LEVEL, SEE DUCT SECTION FOR SIZE & TYPE
	EXISTING ANCHOR GUYING	—L—	2" STREET LIGHT DUCT & WIRING, CONCEALED IN CONCRETE BARRIER
	ANCHOR GUYING PROVIDED BY RESPECTIVE UTILITY CO.		
	EXISTING ANCHOR GUYING TO BE REMOVED BY RESPECTIVE UTILITY CO.		
—sl—	CUT EXISTING CONDUIT & WIRING, INTERCEPT WITH PULLBOX, SEE STREET LIGHTING PLANS	A	DUCT SECTION, DUCT SECTION "A" INDICATED, SEE DETAILS ON SHEETS E29 & E32
	STUB UP, CONDUIT		
	EXISTING HANDHOLE/PULLBOX		
	STREET LIGHT PULLBOX, STATE TYPE "B"		
	STREET LIGHT 2' X 4' PULLBOX, STATE TYPE "D"		
	STREET LIGHT JUNCTION BOX IN BARRIER, SEE SHEET E29		
	STREET LIGHT 3' X 5' PULLBOX, 3' X 5' X 4'D REINFORCED PLASTIC PULLBOX WITH TWO PIECE "NON-SLIP" POLYMER "PARKWAY" RATED COVERS, SIDE ENTRY KNOCKOUTS, AND GROUND ROD, PROVIDED IN ACCORDANCE WITH HTCO STANDARD DRAWING NO. 34111 EXCEPT WITH "STREET LIGHT" INSCRIBED ON COVER		

DETAIL OR SECTION — B — E4,E5,E6|E8 — DETAIL OR SECTION DESIGNATION
SHEET ON WHICH DETAIL OR SECTION IS TAKEN — SHEET ON WHICH DETAIL OR SECTION IS DRAWN

A — E2|E3 (DESIGNATE SECTION "A" TAKEN ON SHEET E2 DRAWN ON SHEET E3) A — E2|E3

STREET LIGHT STANDARD IDENTIFICATION LEGEND:

LEGEND		DESCRIPTION
1	121+93	STATION NUMBER
2	2, CKT #3	STREET LIGHT POLE NUMBER, CIRCUIT NUMBER (VERIFY LIGHT & POLE NO. WITH D.O.T.)
3	14'	POLE CLEAR SETBACK FROM EDGE OF PAVEMENT, SEE NOTE NO. 2 BELOW
4	15'	LUMINAIRE ARM SPAN IN FEET
5	AB	POLE BASE MOUNTING TYPE, SEE NOTE NO. 3 BELOW
6	35'	LUMINAIRE MOUNTING HEIGHT ABOVE PAVEMENT

SYMBOL NOTES:

1. "X" THROUGH DASHED ITEM INDICATES EXISTING ITEM TO BE REMOVED.
2. "BGR" INDICATES SETBACK IS BEHIND GUARD RAIL; "TB" INDICATES MOUNTING IS ON ON TOP OF BARRIER.
3. "AB" INDICATES ANCHOR BASE MOUNTING; "SB" INDICATES SLIP BASE MOUNTING.

GARY I. FUNASAKI LICENSED PROFESSIONAL ENGINEER No. 4195-E HAWAII, U.S.A.

THIS WORK WAS PREPARED BY ME OR UNDER MY SUPERVISION.
6 NOV 1997

STATE OF HAWAII
DEPARTMENT OF TRANSPORTATION
HIGHWAYS DIVISION

ELECTRICAL SITE PLAN, ELECTRICAL SYMBOLS

INTERSTATE ROUTE H-1
Kunia Interchange Improvements
F.A.I. Project No IM-HI-1(219)

SCALE: AS NOTED DATE: OCT. 1997

SHEET No. E1 OF 43 SHEETS

ORIGINAL PLAN	SURVEY PLOTTED BY	DATE
	DRAWN BY	
NOTE BOOK	TRACED BY	
	DESIGNED BY	
No.	QUANTITIES BY	
	CHECKED BY	

LAST SAVED: 11/06/97 @ 08:55:35 BY: SL PLOT SC: 1=1"
G:\FAD\PROJECTS\98098\H98-E1

FED. ROAD DIST. NO.	STATE	FED. AID PROJ. NO.	FISCAL YEAR	SHEET NO.	TOTAL SHEETS
HAWAII	HAW.	IM-HI-1(219)	1998	223	378

GENERAL ELECTRICAL NOTES

1. ALL ELECTRICAL WORK SHALL BE NEW UNLESS OTHERWISE NOTED.

2. THE LOCATIONS OF THE VARIOUS EXISTING UTILITIES SHOWN ON THE CONTRACT DRAWINGS WERE DETERMINED ON THE BASIS OF BEST AVAILABLE INFORMATION. THEREFORE, NO ASSURANCE IS PROVIDED THAT THE ACTUAL LOCATIONS WILL BE PRECISELY AS SHOWN ON THE CONTRACT DRAWINGS. THE CONTRACTOR SHALL BE HELD RESPONSIBLE FOR ANY DAMAGES TO THE FACILITIES.

3. IN PERFORMING ALL WORK, THE CONTRACTOR SHALL EXERCISE DUE CARE AND CAUTION NECESSARY TO AVOID ANY DAMAGE TO AND IMPAIRMENT IN THE USE OF ANY EXISTING UTILITY LINE. ANY DAMAGE INFLICTED ON EXISTING UTILITY LINES RESULTING FROM THE CONTRACTOR'S OPERATIONS SHALL BE IMMEDIATELY REPAIRED OR RESTORED AS DIRECTED BY THE STATE AT THE CONTRACTOR'S EXPENSE.

4. IF THE CONTRACTOR UNCOVERS AN ELECTRICAL LINE OF UNKNOWN ORIGIN/USAGE, HE SHALL IMMEDIATELY NOTIFY THE ENGINEER FOR DIRECTION.

HAWAIIAN ELECTRIC COMPANY (HECO) NOTES

1. THE LOCATION OF OVERHEAD AND UNDERGROUND FACILITIES SHOWN ON THE PLANS ARE FROM EXISTING RECORDS WITH VARYING DEGREES OF ACCURACY AND ARE NOT GUARANTEED AS SHOWN. THE CONTRACTOR SHALL EXERCISE EXTREME CAUTION WHEN THE EXCAVATION AND CONSTRUCTION CROSSES OR IS IN CLOSE PROXIMITY TO UNDERGROUND LINES AND SHALL MAINTAIN ADEQUATE CLEARANCE WHEN OPERATING EQUIPMENT WITHIN OR UNDER ANY OVERHEAD FACILITIES.

2. THE CONTRACTOR SHALL BE LIABLE FOR DAMAGES TO HECO'S FACILITIES AND SHALL IMMEDIATELY REPORT SUCH DAMAGES TO HECO'S TROUBLE DISPATCHER (543-7874).

3. FOR VERIFICATION OF UNDERGROUND LINES OR FOR ASSISTANCE IN SUPPORTING AND PROTECTING THESE LINES, THE CONTRACTOR SHALL CALL HECO'S UNDERGROUND DIVISION AT 543-7345 A MINIMUM OF 72 HOURS IN ADVANCE.

4. WHEN TRENCH EXCAVATION IS ADJACENT TO OR BENEATH HECO'S EXISTING STRUCTURES OR FACILITIES, THE CONTRACTOR IS RESPONSIBLE FOR:

   a. SHEETING AND BRACING THE EXCAVATION TO PREVENT SLIDES, CAVE-INS, AND SETTLEMENTS.

   b. PROTECTING EXISTING STRUCTURES OR FACILITIES WITH BEAMS, STRUTS, OR UNDER-PINNINGS.

5. FOR POLE BRACING INSTRUCTIONS, THE CONTRACTOR SHALL CALL THE HECO DISTRICT SUPERINTENDENT AT 543-4223 (WAIAU) A MINIMUM OF 72 HOURS IN ADVANCE.

6. ALL HECO OVERHEAD AND UNDERGROUND FACILITIES SHALL BE PROTECTED AT ALL TIMES BY THE CONTRACTOR DURING CONSTRUCTION. COSTS FOR DAMAGES TO HECO FACILITIES SHALL BE BORNE BY THE CONTRACTOR. THIS REPAIR WORK SHALL BE DONE BY HECO, OR BY THE CONTRACTOR UNDER HECO'S SUPERVISION.

7. WORK TO BE DONE ON HECO FACILITIES SHALL BE UNDER THE DIRECT SUPERVISION OF A HECO'S INSPECTOR. THE CONTRACTOR SHALL NOTIFY THE CONSTRUCTION MANAGEMENT DEPARTMENT TWO WEEKS PRIOR TO WORK ON HAWAIIAN ELECTRIC CO. FACILITIES, AT 543-5668.

8. THE CONTRACTOR SHALL CALL HECO'S UNDERGROUND DIVISION (543-7345) A MINIMUM OF SEVENTY-TWO (72) HOURS IN ADVANCE FOR VERIFICATION OF UNDERGROUND LINES OR FOR ASSISTANCE IN SUPPORTING AND PROTECTING THESE LINES.

HAWAIIAN TELEPHONE COMPANY (HTCO) NOTES

1. THE LOCATION OF GTE HAWAIIAN TELEPHONE COMPANY'S EXISTING FACILITIES ARE APPROXIMATE ONLY. THE CONTRACTOR SHALL EXERCISE EXTREME CAUTION AND SHALL MAINTAIN PROPER CLEARANCES WHENEVER CONSTRUCTION CROSSES OR IS IN CLOSE PROXIMITY TO GTE HAWAIIAN TELEPHONE COMPANY'S FACILITIES. THE CONTRACTOR SHALL VERIFY THEIR LOCATIONS AND SHALL BE LIABLE FOR ANY DAMAGES TO GTE HAWAIIAN TELEPHONE COMPANY'S FACILITIES. ANY DAMAGES SHALL BE REPORTED IMMEDIATELY TO GTE HAWAIIAN TELEPHONE COMPANY'S REPAIR SECTION AT #611 (24 HOURS) OR TO THE EXCAVATION PERMIT SECTION AT 483-8085 (NORMAL WORK DAY HOURS, MONDAY THRU FRIDAY, EXCEPT HOLIDAYS).

2. FOR UNDERGROUND CABLE LOCATING AND MARKING, FIVE WORKING DAYS ADVANCE NOTICE IS REQUIRED. THREE WORKING DAYS ADVANCE NOTICE IS REQUIRED FOR ANY INSPECTION BY A DESIGNATED REPRESENTATIVE.

3. THE CONTRACTOR SHALL TAKE NECESSARY PRECAUTIONS NOT TO DAMAGE ANY EXISTING CABLES OR DUCTS. ANY WORK INVOLVING EXISTING GTE HAWAIIAN TELEPHONE COMPANY CABLES OR DUCTS SHALL BE DONE IN THE PRESENCE OF A GTE HAWAIIAN TEL INSPECTOR OR DESIGNATED REPRESENTATIVE.

4. THE CONTRACTOR SHALL OBTAIN AN EXCAVATION PERMIT AND TONING REQUEST FROM GTE HAWAIIAN TELEPHONE COMPANY'S EXCAVATION PERMIT SECTION, LOCATED AT 3239 UALENA STREET, THIRD FLOOR, TWO WEEKS PRIOR TO THE START OF CONSTRUCTION. HOURS OF BUSINESS ARE 7:00 AM TO 10:30 AM AND 11:30 AM TO 3:00 PM, MONDAY THRU FRIDAY, EXCEPT HOLIDAYS.

5. THE CONTRACTOR SHALL NOTIFY GTE HAWAIIAN TELEPHONE COMPANY'S INSPECTOR OR DESIGNATED REPRESENTATIVE 72 HOURS PRIOR TO EXCAVATION, BRACING OR BACKFILLING OF GTE HAWAIIAN TELEPHONE COMPANY'S STRUCTURES OR FACILITIES.

6. WHEN EXCAVATION IS ADJACENT TO OR BENEATH GTE HAWAIIAN TELEPHONE COMPANY'S EXISTING STRUCTURES OR FACILITIES, THE CONTRACTOR SHALL:
   a. SHEET AND/OR BRACE THE EXCAVATION TO PREVENT SLIDES, CAVE-INS OR SETTLEMENTS TO ENSURE NO MOVEMENT TO GTE HAWAIIAN TELEPHONE COMPANY'S STRUCTURES OR FACILITIES.
   b. PROTECT EXISTING STRUCTURES AND/OR FACILITIES WITH BEAMS, STRUTS OR UNDERPINNING WHILE EXCAVATING BENEATH THEM TO ENSURE NO MOVEMENT TO GTE HAWAIIAN TELEPHONE COMPANY'S STRUCTURES OR FACILITIES.

GENERAL STREET LIGHT NOTES

1. ALL EXISTING STREET LIGHTS SHALL REMAIN IN OPERATION UNTIL NEW STREET LIGHTS ARE IN PLACE AND ENERGIZED.

2. ALL EXISTING POLES, ARMS, LUMINAIRE AND HARDWARE REMOVED BY CONTRACTOR SHALL BE TRANSPORTED TO DOT BASEYARD AT 727 KAKOI STREET.

GENERAL NOTE

1. CONTRACTOR'S WORK NEAR UTILITY LINES AND POLES SHALL BE COORDINATED WITH RESPECTIVE UTILITY COMPANY.

ORIGINAL PLAN	SURVEY PLOTTED BY	DATE
NOTE BOOK	DRAWN BY	
	TRACED BY	
No.	DESIGNED BY	
	QUANTITIES BY	
	CHECKED BY	

LAST SAVED: 10/07/97 @ 10:02:28 BY: GR PLOT SC: 1=24"
G:\ACAD\PROJECTS\8000\IM8-E3

GARY I. FUNASAKI
LICENSED PROFESSIONAL ENGINEER
No. 4195-E
HAWAII, U.S.A.

THIS WORK WAS PREPARED BY ME OR UNDER MY SUPERVISION.
6 NOV 1997

STATE OF HAWAII
DEPARTMENT OF TRANSPORTATION
HIGHWAYS DIVISION

GENERAL ELECTRICAL NOTES

INTERSTATE ROUTE H-1
Kunia Interchange Improvements
F.A.I. Project No IM-HI-1(219)

SCALE: NONE DATE: OCT. 1997

SHEET No. E2 OF 43 SHEETS

FED. ROAD DIST. NO.	STATE	FED. AID PROJ. NO.	FISCAL YEAR	SHEET NO.	TOTAL SHEETS
HAWAII	HAW.	IM-HI-1(219)	1998	224	378

NOTE:

1 EXISTING ELECTRICAL OVERHEAD LINES TO BE RELOCATED BY HECO.

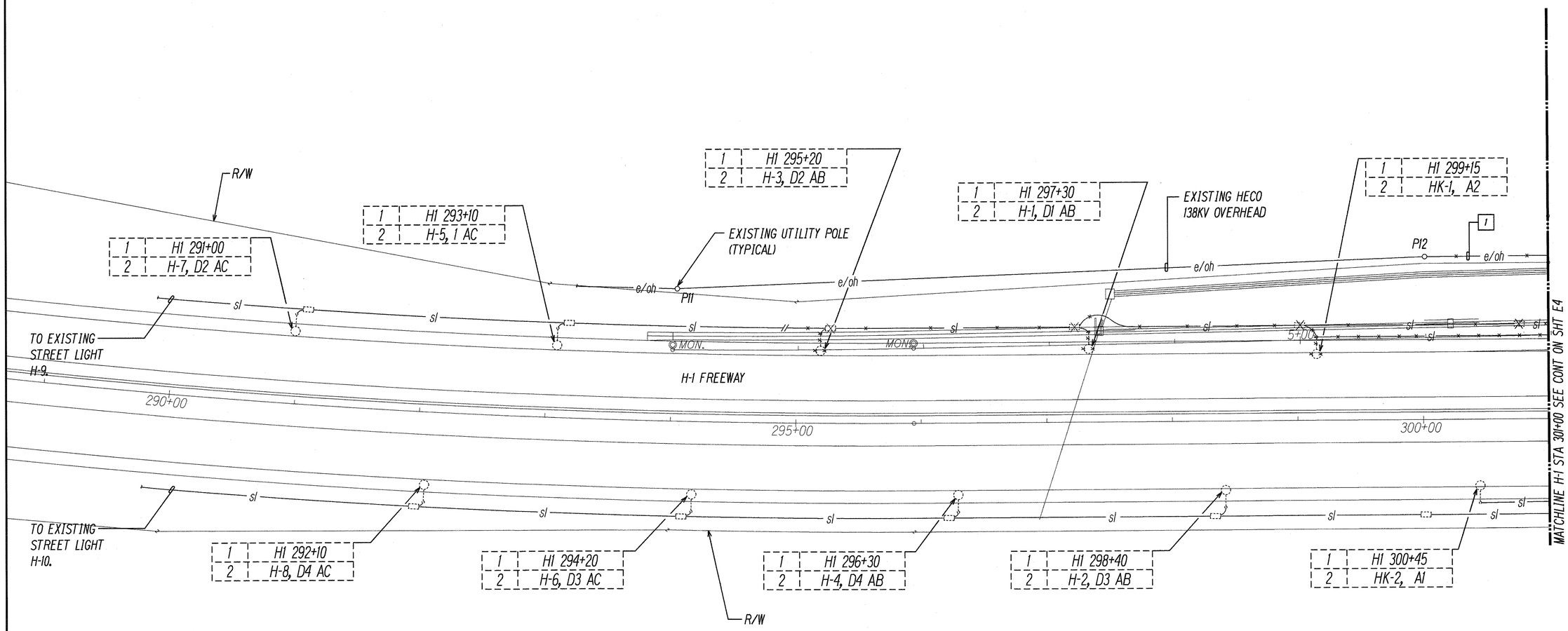

NORTH

ELECTRICAL DEMOLITION PLAN - I

SCALE: 1"=40'

40' 20' 0 40' 80' 120'

SCALE: 1"=40'

GRAPHIC SCALE

ORIGINAL PLAN	SURVEY PLOTTED BY	DATE
	DRAWN BY	"
	TRACED BY	"
NOTE BOOK	DESIGNED BY	"
	QUANTITIES BY	"
No.	CHECKED BY	"

LAST SAVE: 10/07/97 ● 9:54:46 BY: GH PLOT SC: 1=10
G:\ACAD\PROJECTS-1998\IM-HI-1 FED'S 1998\IM-1E6.DGN

GARY I. FUNASAKI
LICENSED PROFESSIONAL ENGINEER
No. 4195-E
HAWAII, U.S.A.

THIS WORK WAS PREPARED BY ME OR UNDER MY SUPERVISION

6 NOV 1997

STATE OF HAWAII
DEPARTMENT OF TRANSPORTATION
HIGHWAYS DIVISION

ELECTRICAL DEMOLITION PLAN - I

INTERSTATE ROUTE H-1
Kunia Interchange Improvements
F.A.I. Project No. IM-HI-1(219)

SCALE: AS NOTED DATE: OCT. 1997

SHEET No. E3 OF 43 SHEETS

FED. ROAD DIST. NO.	STATE	FED. AID PROJ. NO.	FISCAL YEAR	SHEET NO.	TOTAL SHEETS
HAWAII	HAW.	IM-HI-1(219)	1998	225	378

NOTES:

1. EXISTING UTILITY POLE TO BE REMOVED/RELOCATED BY RESPECTIVE UTILITY COMPANY.
2. EXISTING ELECTRICAL/SIGNAL OVERHEAD LINES TO BE REMOVED/ RELOCATED BY RESPECTIVE UTILITY COMPANY.
3. UTILITY POLE P32 TO REMAIN AS RELOCATED. UTILITY POLE P31 TO REMAIN IN EXISTING LOCATION FOR USE BY HTCO. UTILITY POLE P30, AND ASSOCIATED OVERHEAD LINES, TO REMAIN TEMPORARILY DURING CONSTRUCTION TO MAINTAIN ELECTRICAL SERVICE TO EXISTING STREET LIGHT CONTROLLER "A". CONTRACTOR TO COORDINATE REMOVAL OF POLE P30 WITH HECO.

DATE	REVISION
1/30/98	ADDED NOTE NO. 3 PER ADDENDUM NO. 2.

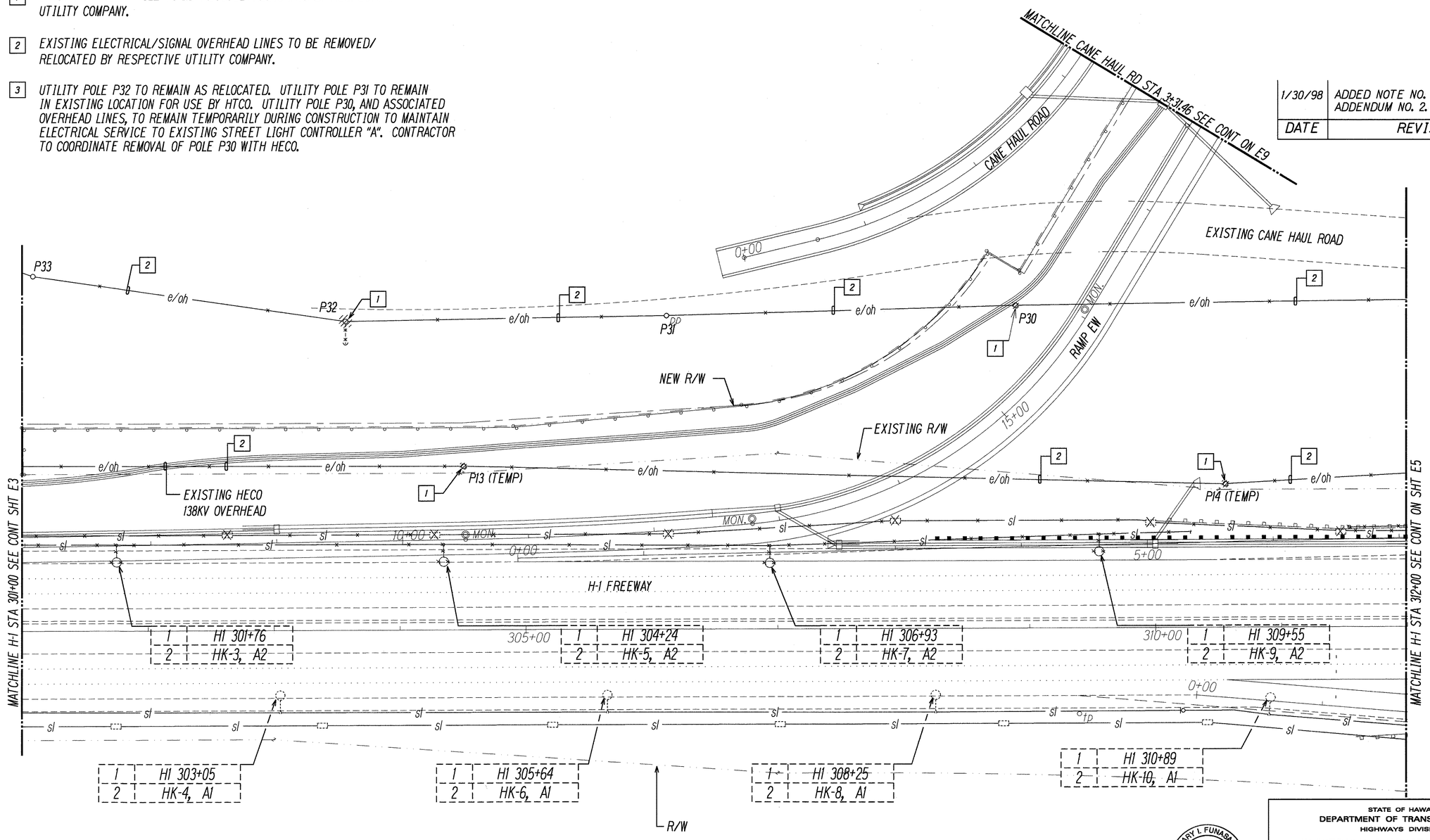

SURVEY PLOTTED BY	DATE
DRAWN BY	
TRACED BY	
DESIGNED BY	
QUANTITIES BY	
CHECKED BY	
ORIGINAL PLAN	
NOTE BOOK	
No.	

$DATE$ $TIME$ $USER$ $FILE$

40' 20' 0 40' 80' 120'
SCALE: 1"=40'
GRAPHIC SCALE

NORTH

ELECTRICAL DEMOLITION PLAN - II
SCALE: 1"=40'

GARY I. FUNASAKI
LICENSED PROFESSIONAL ENGINEER
No. 4195-E
HAWAII, U.S.A.

THIS WORK WAS PREPARED BY ME OR UNDER MY SUPERVISION.

STATE OF HAWAII
DEPARTMENT OF TRANSPORTATION
HIGHWAYS DIVISION

ELECTRICAL DEMOLITION PLAN - II

INTERSTATE ROUTE H-1
Kunia Interchange Improvements
F.A.I. Project No IM-HI-1(219)

SCALE: AS NOTED DATE: OCT. 1997

SHEET No. E4 OF 43 SHEETS

225R

FED. ROAD DIST. NO.	STATE	FED. AID PROJ. NO.	FISCAL YEAR	SHEET NO.	TOTAL SHEETS
HAWAII	HAW.	IM-HI-1(219)	1998	226	378

NOTES:

1. REMOVE EXISTING STREET LIGHT CONTROLLER "A" AND FOUNDATION.
2. EXISTING UTILITY POLE TO BE REMOVED/RELOCATED BY HECO.
3. EXISTING ELECTRICAL/SIGNAL OVERHEAD LINES TO BE REMOVED/RELOCATED BY RESPECTIVE UTILITY COMPANY.
4. REMOVE EXISTING WIRING, ABANDON CONDUIT IN PLACE.
5. UTILITY POLES P27, P28 AND P29, AND ASSOCIATED OVERHEAD LINES TO REMAIN TEMPORARILY DURING CONSTRUCTION TO MAINTAIN ELECTRICAL SERVICE TO EXISTING STREET LIGHT CONTROLLER "A". CONTRACTOR TO COORDINATE REMOVAL OF POLES WITH HECO.

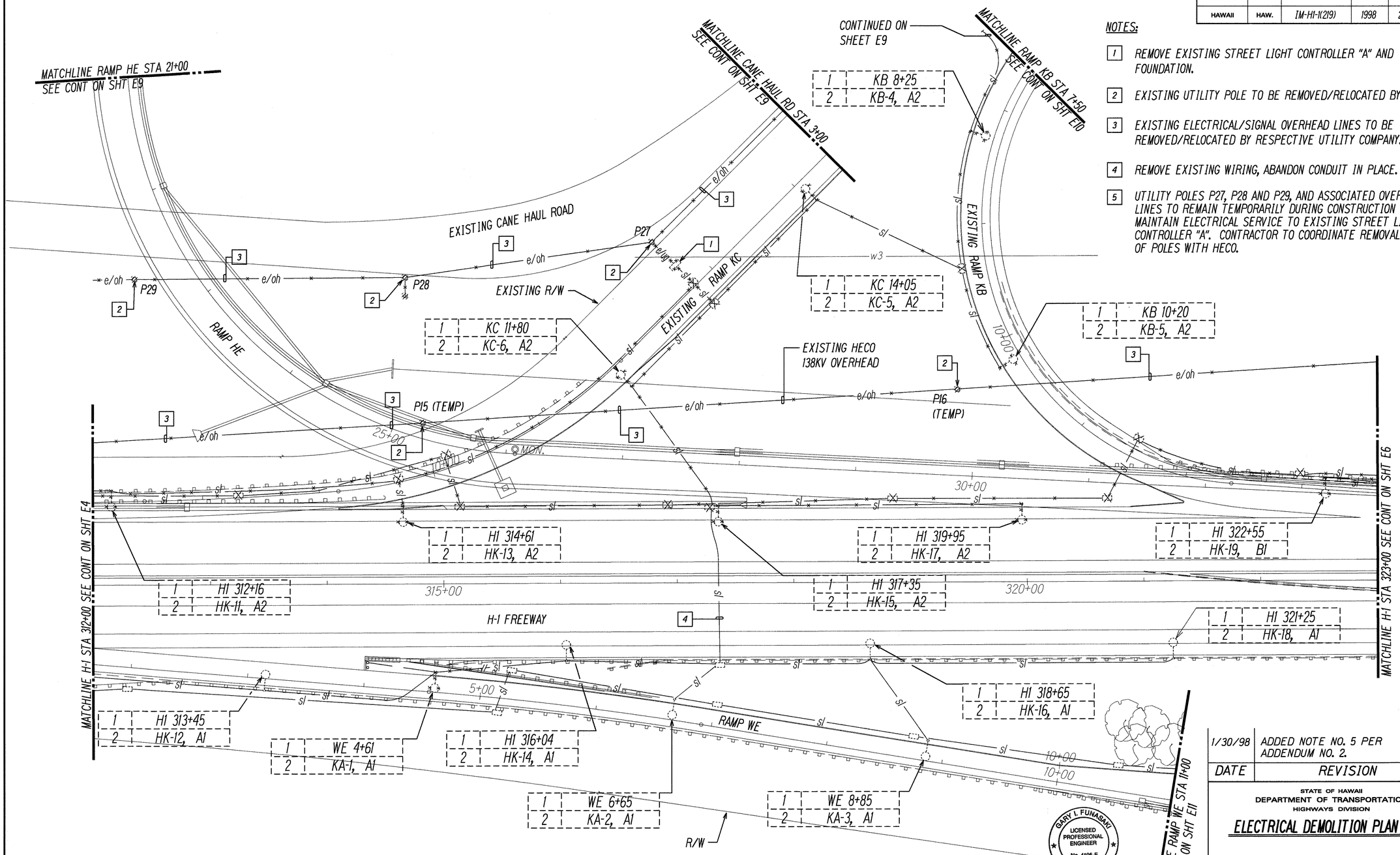

ELECTRICAL DEMOLITION PLAN - III
SCALE: 1"=40'

DATE	REVISION
1/30/98	ADDED NOTE NO. 5 PER ADDENDUM NO. 2.

GARY I. FUNASAKI
LICENSED PROFESSIONAL ENGINEER
No. 4195-E
HAWAII, U.S.A.

THIS WORK WAS PREPARED BY ME OR UNDER MY SUPERVISION.

STATE OF HAWAII
DEPARTMENT OF TRANSPORTATION
HIGHWAYS DIVISION

ELECTRICAL DEMOLITION PLAN - III

INTERSTATE ROUTE H-1
Kunia Interchange Improvements
F.A.I. Project No IM-HI-1(219)

SCALE: AS NOTED DATE: OCT. 1997

SHEET No. E5 OF 43 SHEETS

ORIGINAL PLAN | NOTE BOOK | No. | SURVEY PLOTTED BY | DRAWN BY | TRACED BY | DESIGNED BY | QUANTITIES BY | CHECKED BY | DATE

$TIME$ $USER$ $FILE$ $DATE$

226R

FED. ROAD DIST. NO.	STATE	FED. AID PROJ. NO.	FISCAL YEAR	SHEET NO.	TOTAL SHEETS
HAWAII	HAW.	IM-HI-1(219)	1998	227	378

NOTES:

1. EXISTING UTILITY PULLBOX TO BE REMOVED BY HECO.
2. REMOVE EXISTING STREET LIGHT CONTROLLER "D" AND FOUNDATION.
3. EXISTING PAD MOUNTED XFMR & PRIMARY CABLES TO BE REMOVED BY HECO.
4. EXISTING ELECTRICAL OVERHEAD LINES TO BE REMOVED/RELOCATED BY HECO.
5. EXISTING UTILITY POLE TO BE REMOVED/RELOCATED BY HECO.
6. CUT & CAP EXISTING CABLE IN PULLBOX.

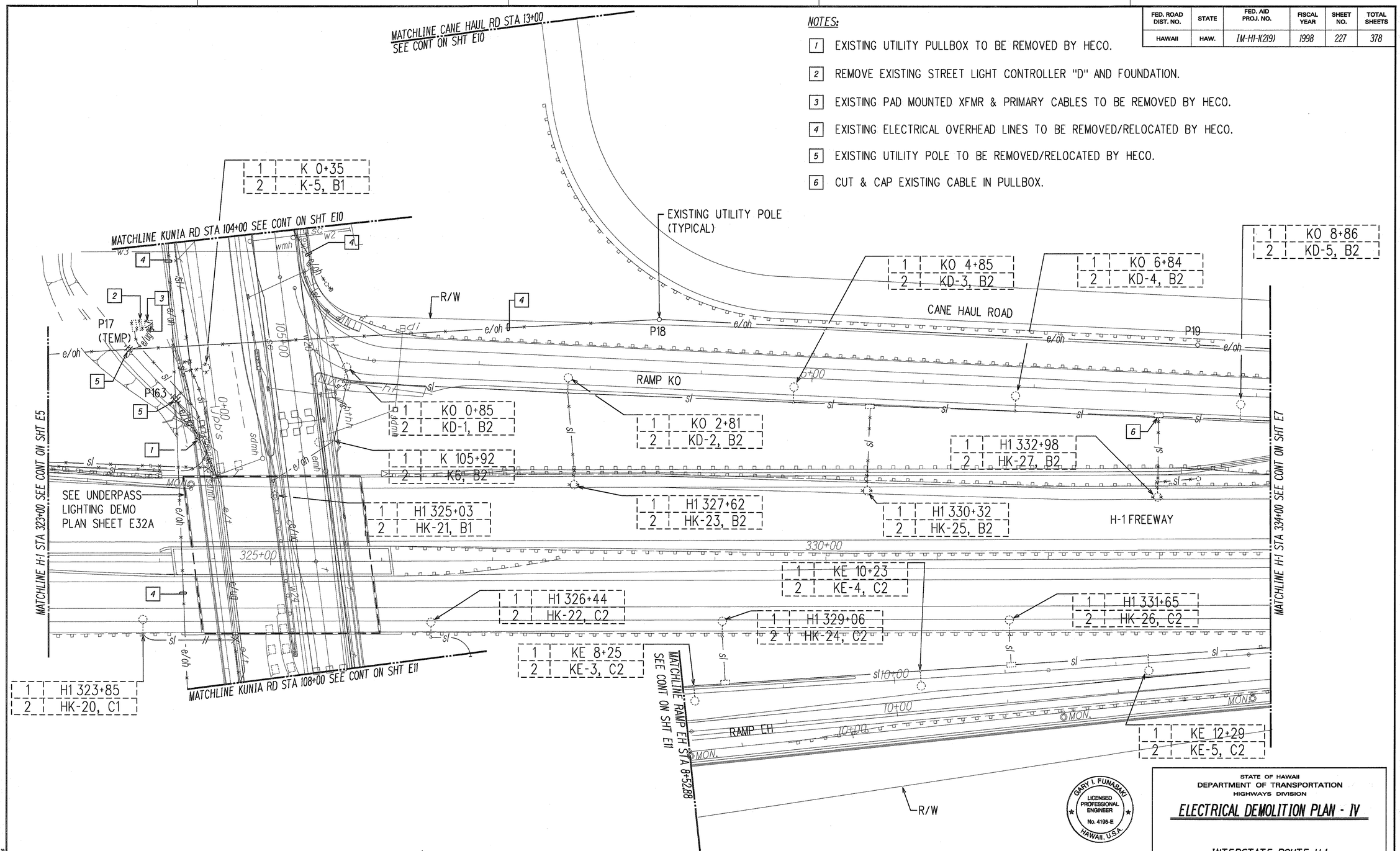

ELECTRICAL DEMOLITION PLAN - IV
SCALE: 1"=40'

SURVEY PLOTTED BY		DATE
SURVEY CHECKED BY		
TRACED BY		
DESIGNED BY		
QUANTITIES BY		
CHECKED BY		
ORIGINAL PLAN	NOTE BOOK	No.

LAST SAVE SUBTOP 8 ISSUES BY ON PLOT SC 140
G:\ADMIN\PROJECT\IM-HI-1(219)\E6

GARY I. FUNASAKI
LICENSED PROFESSIONAL ENGINEER
No. 4195-E
HAWAII, U.S.A.

THIS WORK WAS PREPARED BY ME OR UNDER MY SUPERVISION.
6 NOV 1997

STATE OF HAWAII
DEPARTMENT OF TRANSPORTATION
HIGHWAYS DIVISION

ELECTRICAL DEMOLITION PLAN - IV

INTERSTATE ROUTE H-1
Kunia Interchange Improvements
F.A.I. Project No IM-HI-1(219)

SCALE: AS NOTED DATE: OCT. 1997

SHEET No. E6 OF 43 SHEETS

227

FED. ROAD DIST. NO.	STATE	FED. AID PROJ. NO.	FISCAL YEAR	SHEET NO.	TOTAL SHEETS
HAWAII	HAW.	IM-H1-1(219)	1998	228	378

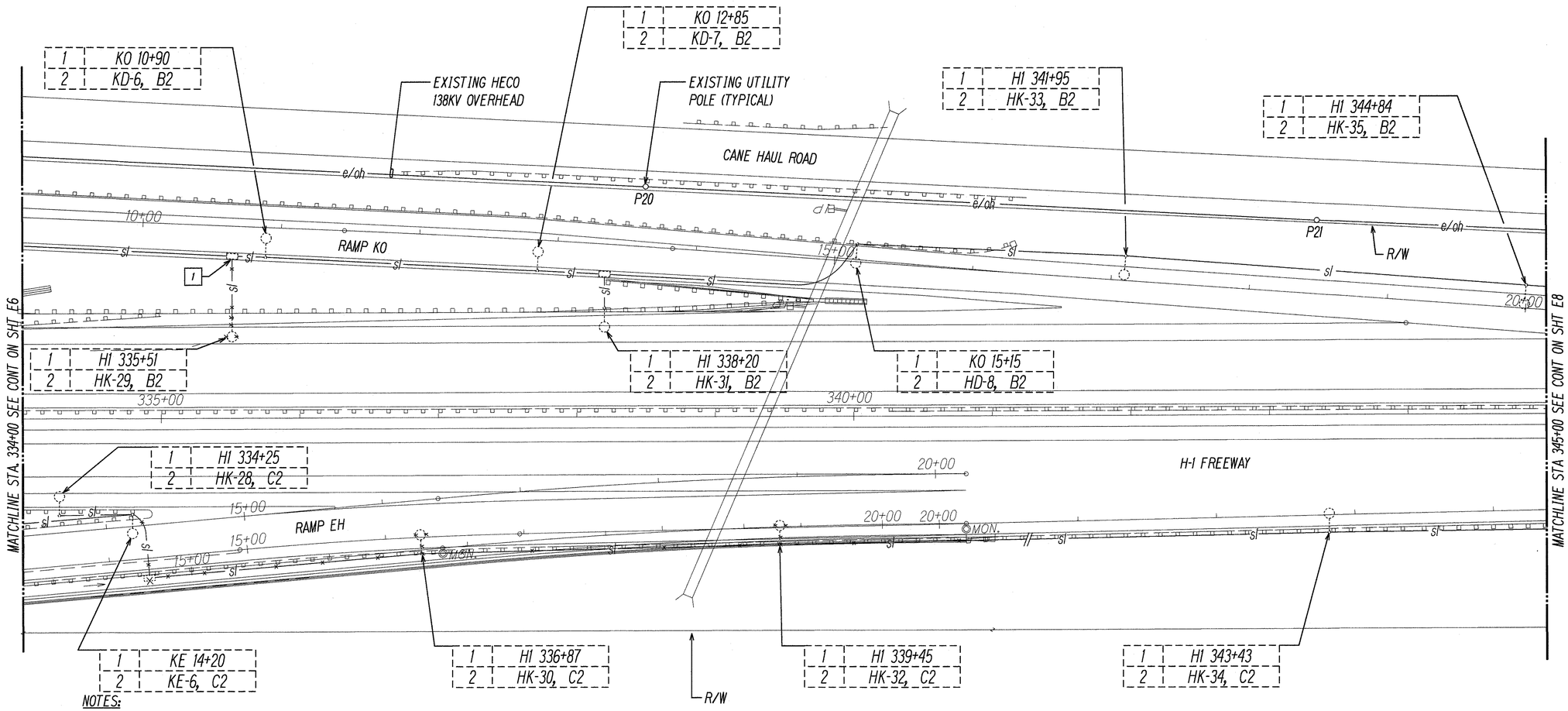

NOTES:

1 CUT & CAP EXISTING CABLE IN PULLBOX.

NORTH

ELECTRICAL DEMOLITION PLAN - V

SCALE: 1"=40'

40' 20' 0 40' 80' 120'

SCALE: 1"=40'

GRAPHIC SCALE

ORIGINAL PLAN	SURVEY PLOTTED BY	DATE
	DRAWN BY	
	TRACED BY	
NOTE BOOK	DESIGNED BY	
	QUANTITIES BY	
No.	CHECKED BY	

LAST SAVED, 10/07/97 ● 9:30:03 BY GH PLOT SC 1=40
G:\HIGH\PROJECTS\8080\10\H17

GARY I. FUNASAKI LICENSED PROFESSIONAL ENGINEER No. 4195-E HAWAII, U.S.A.

THIS WORK WAS PREPARED BY ME OR UNDER MY SUPERVISION.

6 NOV 1997

STATE OF HAWAII
DEPARTMENT OF TRANSPORTATION
HIGHWAYS DIVISION

ELECTRICAL DEMOLITION PLAN - V

INTERSTATE ROUTE H-1
Kunia Interchange Improvements
F.A.I. Project No IM-H1-1(219)

SCALE: AS NOTED DATE: OCT. 1997

SHEET No. E7 OF 43 SHEETS

FED. ROAD DIST. NO.	STATE	FED. AID PROJ. NO.	FISCAL YEAR	SHEET NO.	TOTAL SHEETS
HAWAII	HAW.	IM-HI-1(219)	1998	229	378

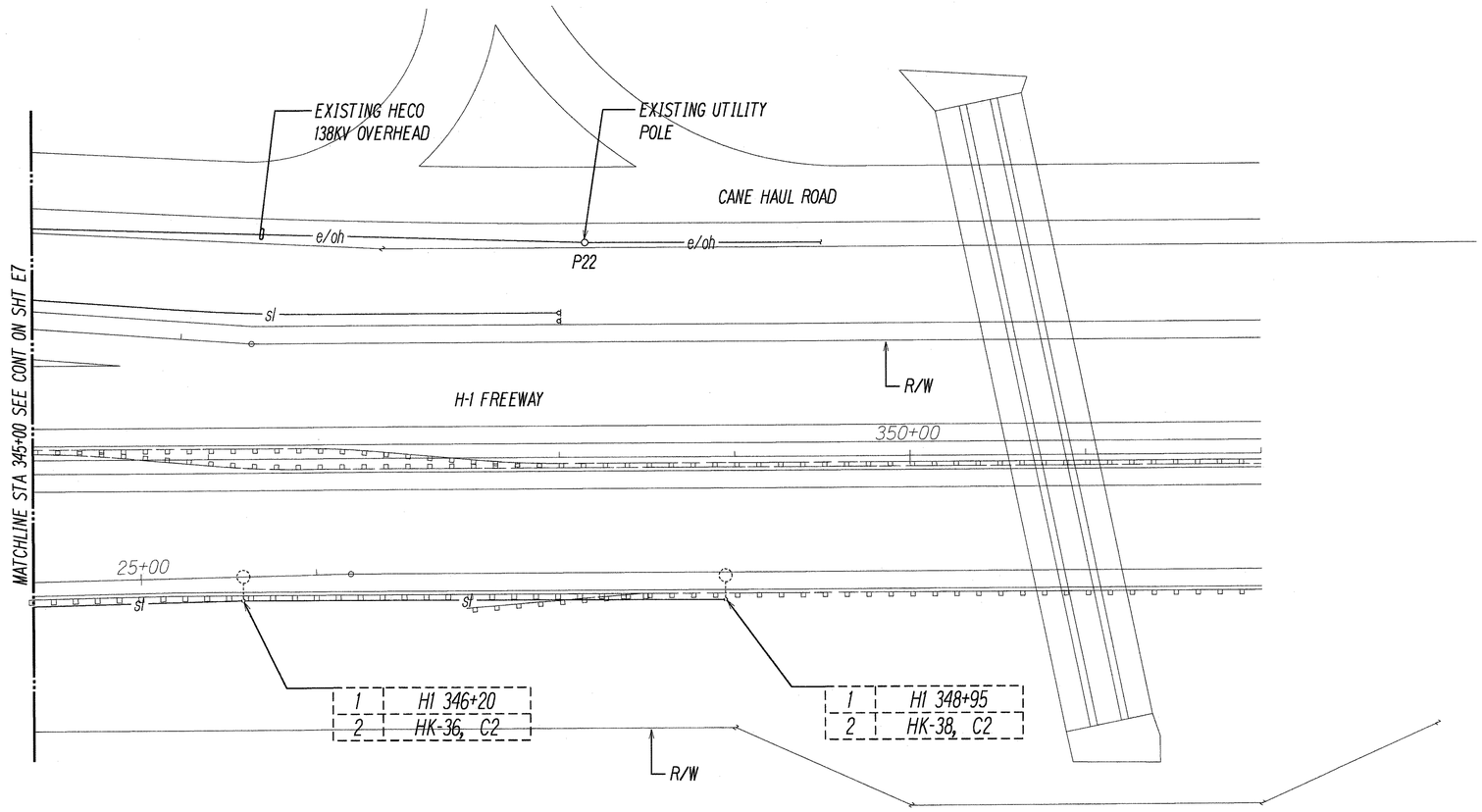

SURVEY PLOTTED BY	
DRAWN BY	
TRACED BY	
DESIGNED BY	
QUANTITIES BY	
CHECKED BY	
DATE	
ORIGINAL PLAN	
NOTE BOOK	
No.	

LAST SAVED, 10/07/97 @ 8:53:09 BY, OR PLOT SC 1=40
Q:\ACAD\PROJECTS\96080\H96-03 IMP'S, TSM\H96-03E08E

NORTH

ELECTRICAL DEMOLITION PLAN - VI

SCALE: 1"=40'

40' 20' 0 40' 80' 120'

SCALE: 1"=40'

GRAPHIC SCALE

GARY I. FUNASAKI
LICENSED PROFESSIONAL ENGINEER
No. 4195-E
HAWAII, U.S.A.

THIS WORK WAS PREPARED BY ME OR UNDER MY SUPERVISION.

6 NOV 1997

STATE OF HAWAII
DEPARTMENT OF TRANSPORTATION
HIGHWAYS DIVISION

ELECTRICAL DEMOLITION PLAN - VI

INTERSTATE ROUTE H-1
Kunia Interchange Improvements
F.A.I. Project No IM-HI-1(219)

SCALE: AS NOTED DATE: OCT. 1997

SHEET No. E8 OF 43 SHEETS

FED. ROAD DIST. NO.	STATE	FED. AID PROJ. NO.	FISCAL YEAR	SHEET NO.	TOTAL SHEETS
HAWAII	HAW.	IM-HI-1(219)	1998	230	378

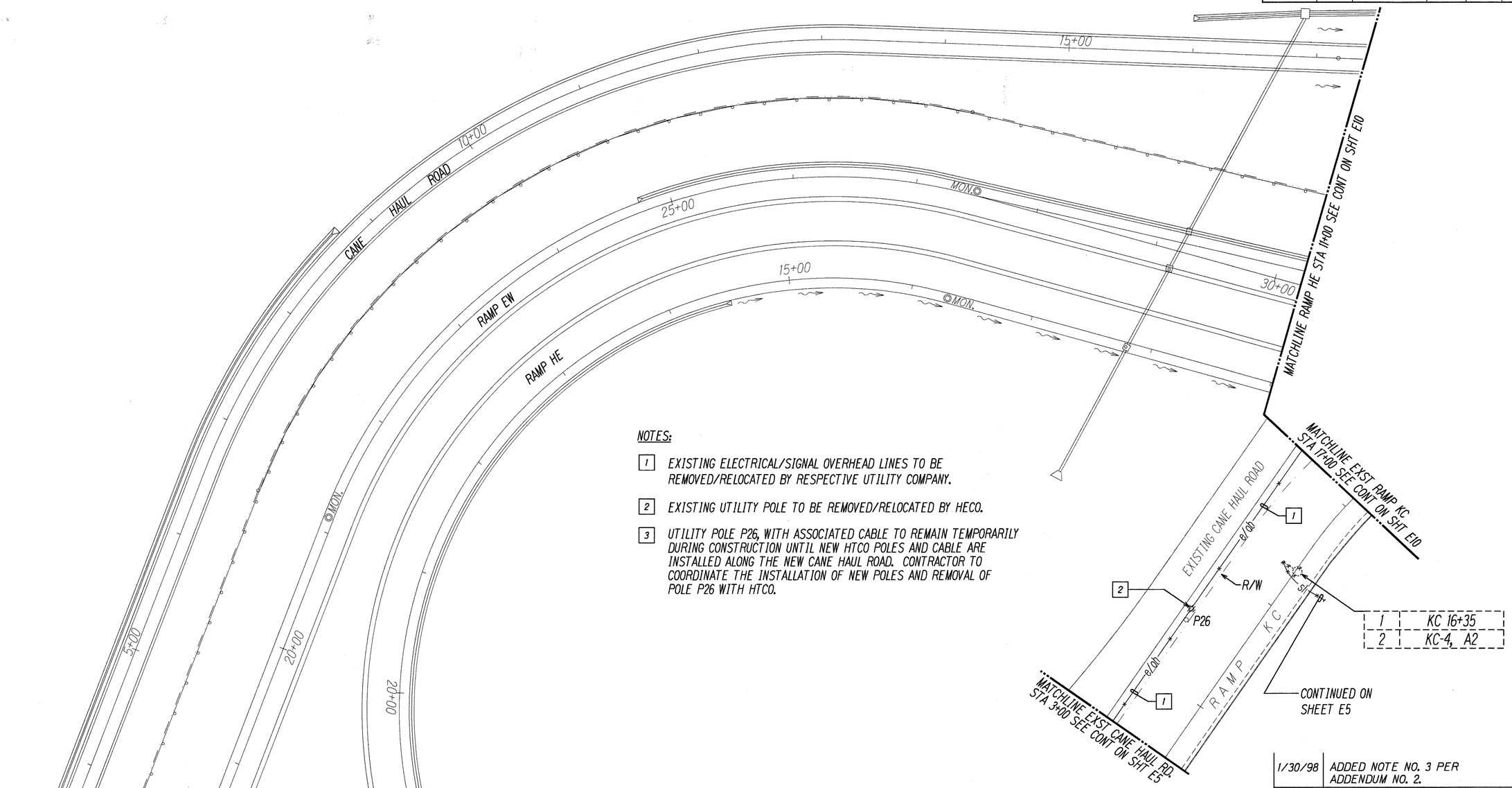

1	KC 16+35
2	KC-4, A2

NOTES:

1. EXISTING ELECTRICAL/SIGNAL OVERHEAD LINES TO BE REMOVED/RELOCATED BY RESPECTIVE UTILITY COMPANY.
2. EXISTING UTILITY POLE TO BE REMOVED/RELOCATED BY HECO.
3. UTILITY POLE P26, WITH ASSOCIATED CABLE TO REMAIN TEMPORARILY DURING CONSTRUCTION UNTIL NEW HTCO POLES AND CABLE ARE INSTALLED ALONG THE NEW CANE HAUL ROAD. CONTRACTOR TO COORDINATE THE INSTALLATION OF NEW POLES AND REMOVAL OF POLE P26 WITH HTCO.

40' 20' 0 40' 80' 120'
SCALE: 1"=40'
GRAPHIC SCALE

NORTH

ELECTRICAL DEMOLITION PLAN - VII
SCALE: 1"=40'

1/30/98	ADDED NOTE NO. 3 PER ADDENDUM NO. 2.
DATE	REVISION

STATE OF HAWAII
DEPARTMENT OF TRANSPORTATION
HIGHWAYS DIVISION

ELECTRICAL DEMOLITION PLAN - VII

INTERSTATE ROUTE H-1
Kunia Interchange Improvements
F.A.I. Project No IM-HI-1(219)

GARY I. FUNASAKI
LICENSED PROFESSIONAL ENGINEER
No. 4195-E
HAWAII, U.S.A.

THIS WORK WAS PREPARED BY ME OR UNDER MY SUPERVISION.

SCALE: AS NOTED DATE: OCT. 1997

SHEET No. E9 OF 43 SHEETS

ORIGINAL PLAN | SURVEY PLOTTED BY | DRAWN BY | TRACED BY | DESIGNED BY | QUANTITIES BY | CHECKED BY | DATE
NOTE BOOK No.

STATE | SUBSHEETS

230R

FED. ROAD DIST. NO.	STATE	FED. AID PROJ. NO.	FISCAL YEAR	SHEET NO.	TOTAL SHEETS
HAWAII	HAW.	IM-HI-1(219)	1998	231	378

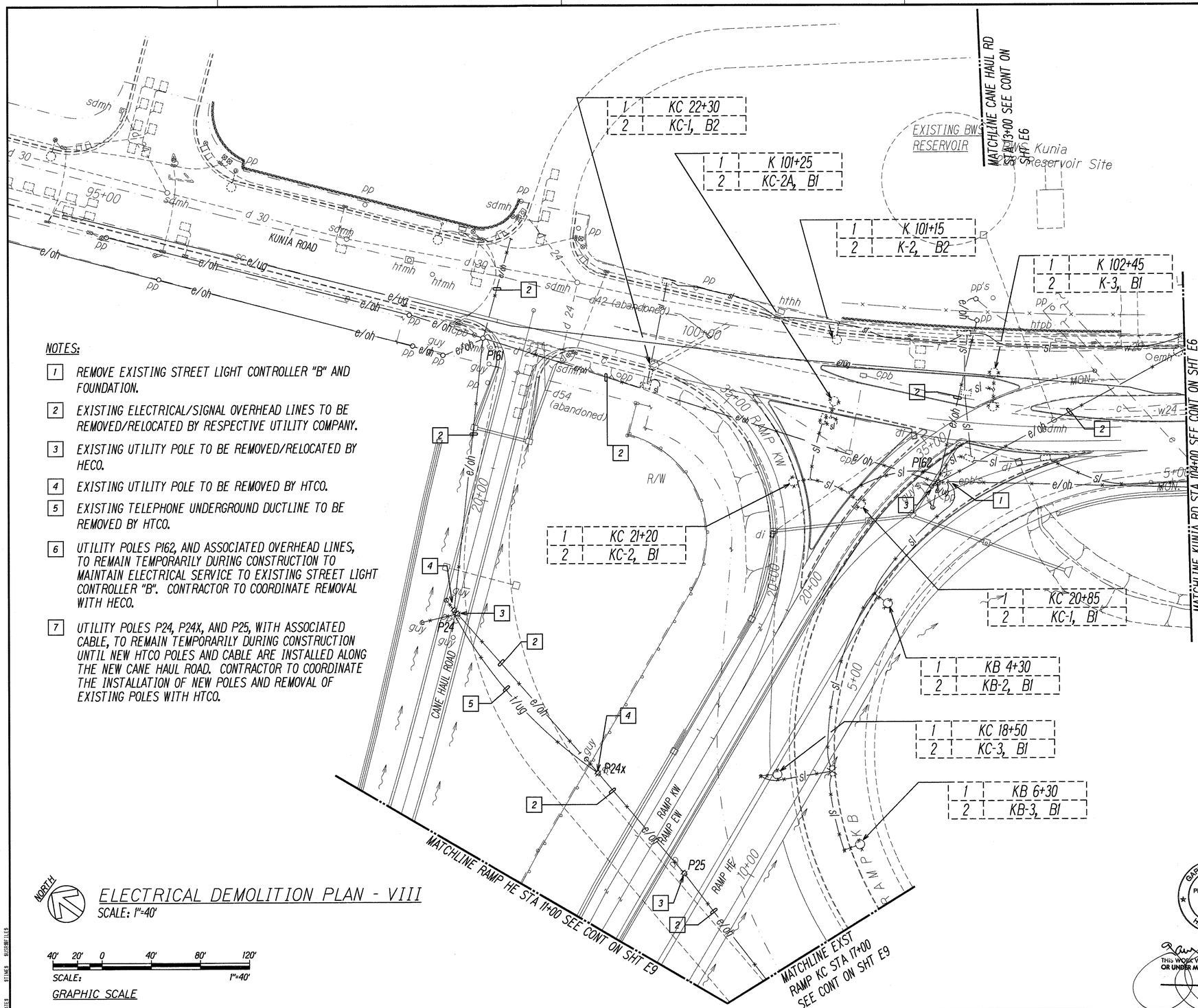

NOTES:

1. REMOVE EXISTING STREET LIGHT CONTROLLER "B" AND FOUNDATION.
2. EXISTING ELECTRICAL/SIGNAL OVERHEAD LINES TO BE REMOVED/RELOCATED BY RESPECTIVE UTILITY COMPANY.
3. EXISTING UTILITY POLE TO BE REMOVED/RELOCATED BY HECO.
4. EXISTING UTILITY POLE TO BE REMOVED BY HTCO.
5. EXISTING TELEPHONE UNDERGROUND DUCTLINE TO BE REMOVED BY HTCO.
6. UTILITY POLES P162, AND ASSOCIATED OVERHEAD LINES, TO REMAIN TEMPORARILY DURING CONSTRUCTION TO MAINTAIN ELECTRICAL SERVICE TO EXISTING STREET LIGHT CONTROLLER "B". CONTRACTOR TO COORDINATE REMOVAL WITH HECO.
7. UTILITY POLES P24, P24X, AND P25, WITH ASSOCIATED CABLE, TO REMAIN TEMPORARILY DURING CONSTRUCTION UNTIL NEW HTCO POLES AND CABLE ARE INSTALLED ALONG THE NEW CANE HAUL ROAD. CONTRACTOR TO COORDINATE THE INSTALLATION OF NEW POLES AND REMOVAL OF EXISTING POLES WITH HTCO.

NORTH

ELECTRICAL DEMOLITION PLAN - VIII

SCALE: 1"=40'

40' 20' 0 40' 80' 120'

SCALE: 1"=40'

GRAPHIC SCALE

DATE	REVISION
1/30/98	ADDED NOTE NOS. 6, & 7 PER ADDENDUM NO. 2.

STATE OF HAWAII
DEPARTMENT OF TRANSPORTATION
HIGHWAYS DIVISION

ELECTRICAL DEMOLITION PLAN - VIII

INTERSTATE ROUTE H-1
Kunia Interchange Improvements
F.A.I. Project No IM-HI-1(219)

GARY I. FUNASAKI
LICENSED PROFESSIONAL ENGINEER
No. 4195-E
HAWAII, U.S.A.

THIS WORK WAS PREPARED BY ME OR UNDER MY SUPERVISION.

SCALE: AS NOTED DATE: OCT. 1997

SHEET No. E10 OF 43 SHEETS

ORIGINAL PLAN | SURVEY PLOTTED BY | DRAWN BY | TRACED BY | DESIGNED BY | QUANTITIES BY | CHECKED BY | DATE

NOTE BOOK No.

SCALE: 1"=40" DESIGNED: 11/13

231R

FED. ROAD DIST. NO.	STATE	FED. AID PROJ. NO.	FISCAL YEAR	SHEET NO.	TOTAL SHEETS
HAWAII	HAW.	IM-HI-1(219)	1998	232	378

MATCHLINE RAMP EH STA 8+25.88 SEE CONT ON SHT E6

NOTES:

1. REMOVE EXISTING STREET LIGHT CONTROLLER "C" AND FOUNDATION.
2. EXISTING ELECTRICAL/SIGNAL OVERHEAD LINES TO BE REMOVED/RELOCATED BY RESPECTIVE UTILITY COMPANY.
3. EXISTING UTILITY POLE TO BE REMOVED/RELOCATED BY RESPECTIVE UTILITY CO.
4. EXISTING UTILITY PULLBOX TO BE REMOVED BY HECO.
5. UTILITY POLE P165, AND ASSOCIATED OVERHEAD LINES, TO REMAIN TEMPORARILY DURING CONSTRUCTION TO MAINTAIN ELECTRICAL SERVICE TO EXISTING STREET LIGHT CONTROLLER "C". CONTRACTOR TO COORDINATE REMOVAL OF POLES WITH HECO.
6. UTILITY POLE P1/166 TO REMAIN IN PLACE WITH THE ANCHOR REMOVED.
7. HTCO TO RELOCATE UTILITY POLE P45 AT ENTRANCE TO RAMP EH DURING CONSTRUCTION. CONTRACTOR TO REMOVAL WITH HTCO.

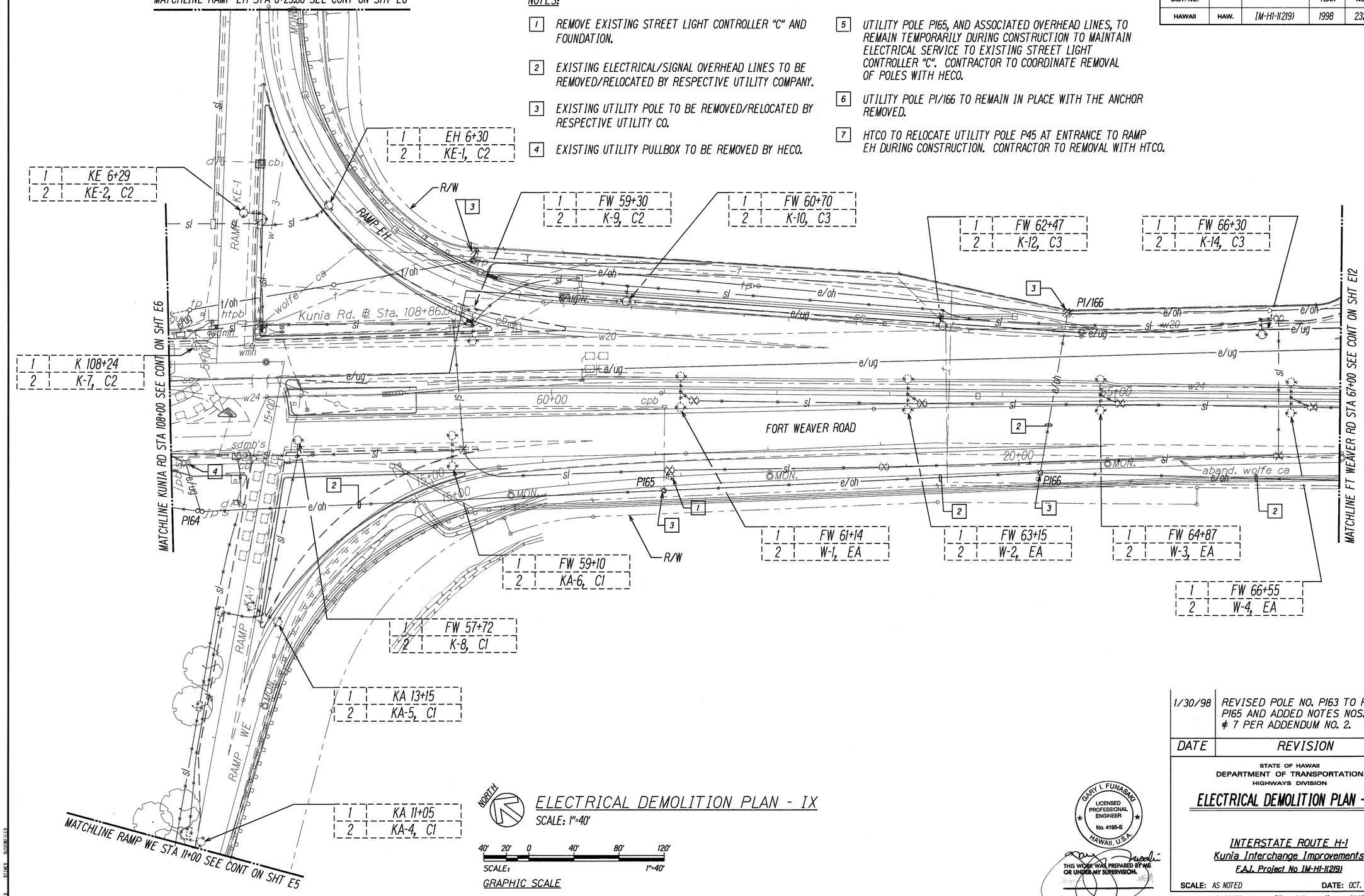

ELECTRICAL DEMOLITION PLAN - IX

SCALE: 1"=40'

40' 20' 0 40' 80' 120'

SCALE: 1"=40'

GRAPHIC SCALE

DATE	REVISION
1/30/98	REVISED POLE NO. P163 TO READ P165 AND ADDED NOTES NOS. 5, 6, & 7 PER ADDENDUM NO. 2.

STATE OF HAWAII
DEPARTMENT OF TRANSPORTATION
HIGHWAYS DIVISION

ELECTRICAL DEMOLITION PLAN - IX

INTERSTATE ROUTE H-1
Kunia Interchange Improvements
F.A.I. Project No IM-HI-1(219)

GARY I. FUNASAKI
LICENSED PROFESSIONAL ENGINEER
No. 4195-E
HAWAII, U.S.A.

THIS WORK WAS PREPARED BY ME OR UNDER MY SUPERVISION.

SCALE: AS NOTED DATE: OCT. 1997

SHEET No. E11 OF 43 SHEETS

SURVEY PLOTTED BY
DRAWN BY
TRACED BY
DESIGNED BY
QUANTITIES BY
CHECKED BY
DATE

ORIGINAL PLAN
NOTE BOOK
No.

DATE 8 STIME 8 USERFILE 8

232R

FED. ROAD DIST. NO.	STATE	FED. AID PROJ. NO.	FISCAL YEAR	SHEET NO.	TOTAL SHEETS
HAWAII	HAW.	IM-HI-1(219)	1998	233	378

NOTES:

1. EXISTING UTILITY POLE TO BE REMOVED/RELOCATED BY HECO.
2. EXISTING ELECTRICAL/SIGNAL OVERHEAD LINES TO BE REMOVED/ RELOCATED BY RESPECTIVE UTILITY CO.

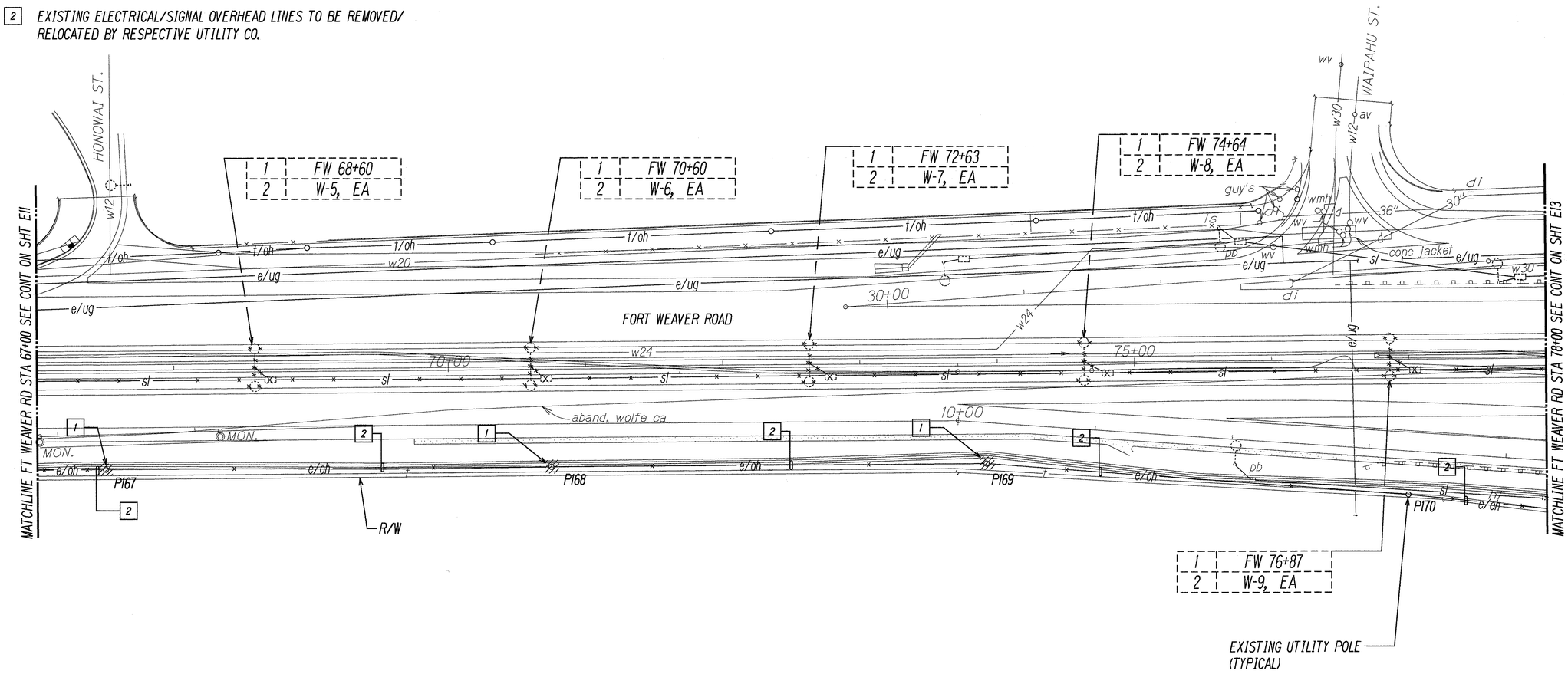

NORTH

ELECTRICAL DEMOLITION PLAN - X

SCALE: 1"=40'

40' 20' 0 40' 80' 120'

SCALE: 1"=40'

GRAPHIC SCALE

ORIGINAL PLAN	SURVEY PLOTTED BY	DATE
	DRAWN BY	"
	TRACED BY	"
NOTE BOOK	DESIGNED BY	"
	QUANTITIES BY	"
No.	CHECKED BY	"

LAST SHEET REVISED BY ON PLOT SC 1=0
G:\ACD\PROJECTS\2600S\IM-H-219 TMD'S 1998\IM-H-E12.DGN

GARY I. FUNASAKI
LICENSED PROFESSIONAL ENGINEER
No. 4195-E
HAWAII, U.S.A.

THIS WORK WAS PREPARED BY ME OR UNDER MY SUPERVISION.
6 NOV 1997

STATE OF HAWAII
DEPARTMENT OF TRANSPORTATION
HIGHWAYS DIVISION

ELECTRICAL DEMOLITION PLAN - X

INTERSTATE ROUTE H-1
Kunia Interchange Improvements
F.A.I. Project No IM-HI-1(219)

SCALE: AS NOTED DATE: OCT. 1997

SHEET No. E12 OF 43 SHEETS

FED. ROAD DIST. NO.	STATE	FED. AID PROJ. NO.	FISCAL YEAR	SHEET NO.	TOTAL SHEETS
HAWAII	HAW.	IM-HI-1(219)	1998	234	378

NOTES:

1. EXISTING UTILITY POLE TO BE REMOVED/RELOCATED BY HECO.
2. EXISTING ELECTRICAL/SIGNAL OVERHEAD LINES TO BE REMOVED/ RELOCATED BY RESPECTIVE UTILITY CO.
3. CUT & HOT CAP EXISTING STREET LIGHT CABLES IN EXISTING PULLBOX.

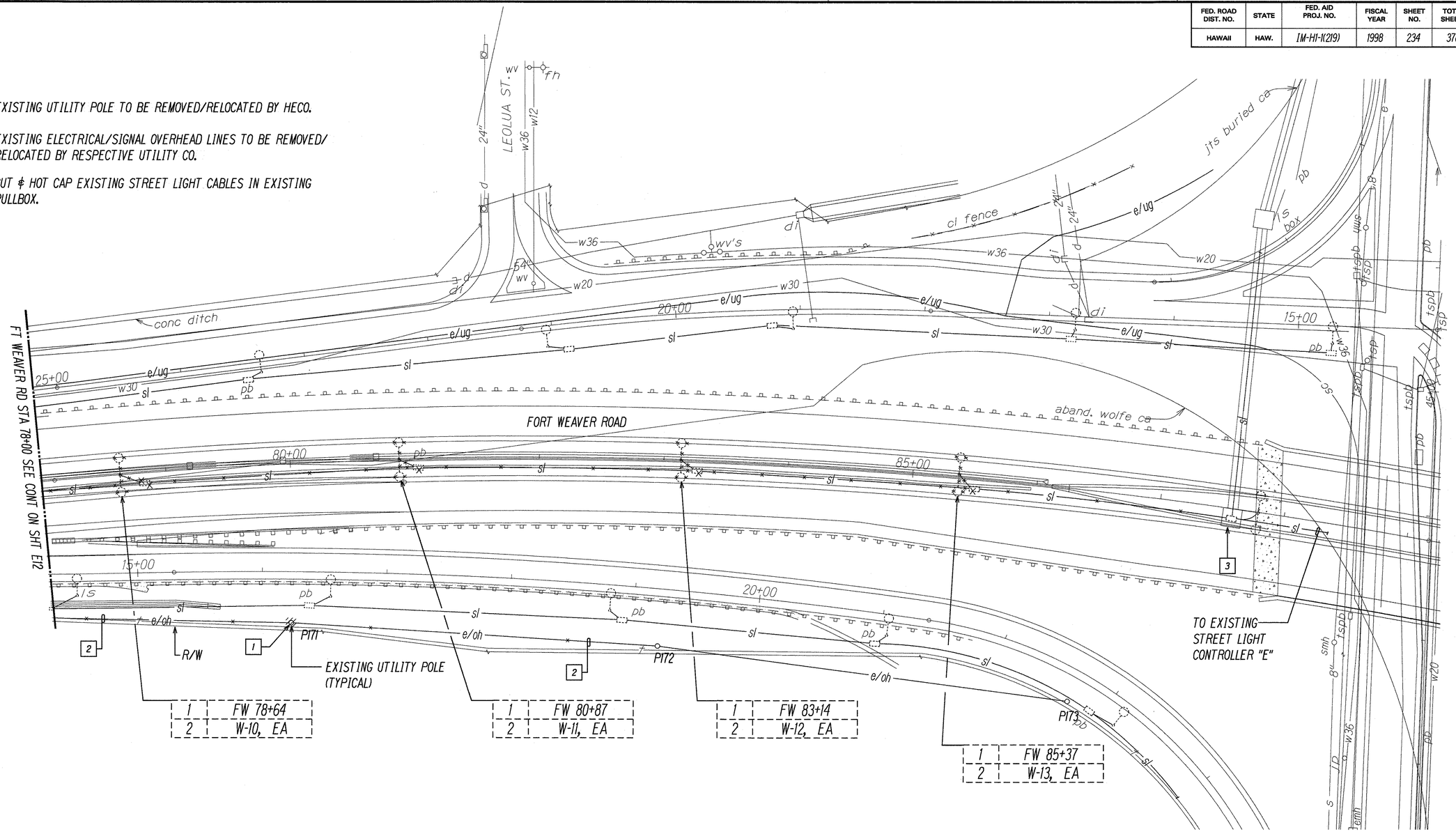

NORTH

ELECTRICAL DEMOLITION PLAN XI

SCALE: 1"=40'

40' 20' 0 40' 80' 120'

SCALE: 1"=40'

GRAPHIC SCALE

ORIGINAL PLAN	SURVEY PLOTTED BY
	DRAWN BY
	TRACED BY
NOTE BOOK	DESIGNED BY
	QUANTITIES BY
No.	CHECKED BY
	DATE

LAST SAVE: 10/07/97 @ 11:30:03 BY: GH PLOT SC: 1=40
G:\ACAD\PROJECTS\IM0001\IM-E13 PREP'D: 10/06/97 HDOT

GARY I. FUNASAKI
LICENSED PROFESSIONAL ENGINEER
No. 4195-E
HAWAII, U.S.A.

THIS WORK WAS PREPARED BY ME OR UNDER MY SUPERVISION.
6 NOV 1997

STATE OF HAWAII
DEPARTMENT OF TRANSPORTATION
HIGHWAYS DIVISION

ELECTRICAL DEMOLITION PLAN XI

INTERSTATE ROUTE H-1
Kunia Interchange Improvements
F.A.I. Project No IM-HI-1(219)

SCALE: AS NOTED DATE: OCT. 1997

SHEET No. E13 OF 43 SHEETS

FED. ROAD DIST. NO.	STATE	FED. AID PROJ. NO.	FISCAL YEAR	SHEET NO.	TOTAL SHEETS
HAWAII	HAW.	IM-HI-1(219)	1998	235	378

NOTES:

1. HIGHWAY SIGN, STUB-OUT 2"C WITH PULLWIRE TO SIGN BASE LOCATION. SEE SHT T4 FOR SIGNING PLAN.
2. INTERCEPT EXISTING STREET LIGHT CONDUIT WITH PULLBOX.
3. SEE DETAIL A / E14|E26
4. REPLACE EXISTING 240V BALLAST WITH 480V BALLAST. PROVIDE NEW I.D. TAG, SEE SHEET E42.
5. BREAK INTO EXISTING STREET LIGHTING PULLBOX AND EXTEND 2"C, 2#8, #8 GND TO HIGHWAY SIGN PULLBOX. PROVIDE SLACK CABLE WITHIN HIGHWAY SIGN PULLBOX TO PROVIDE CONNECTION TO HIGHWAY SIGN LIGHTING. SEE SHT E33 FOR HIGHWAY SIGN LIGHTING WIRING DIAGRAM.

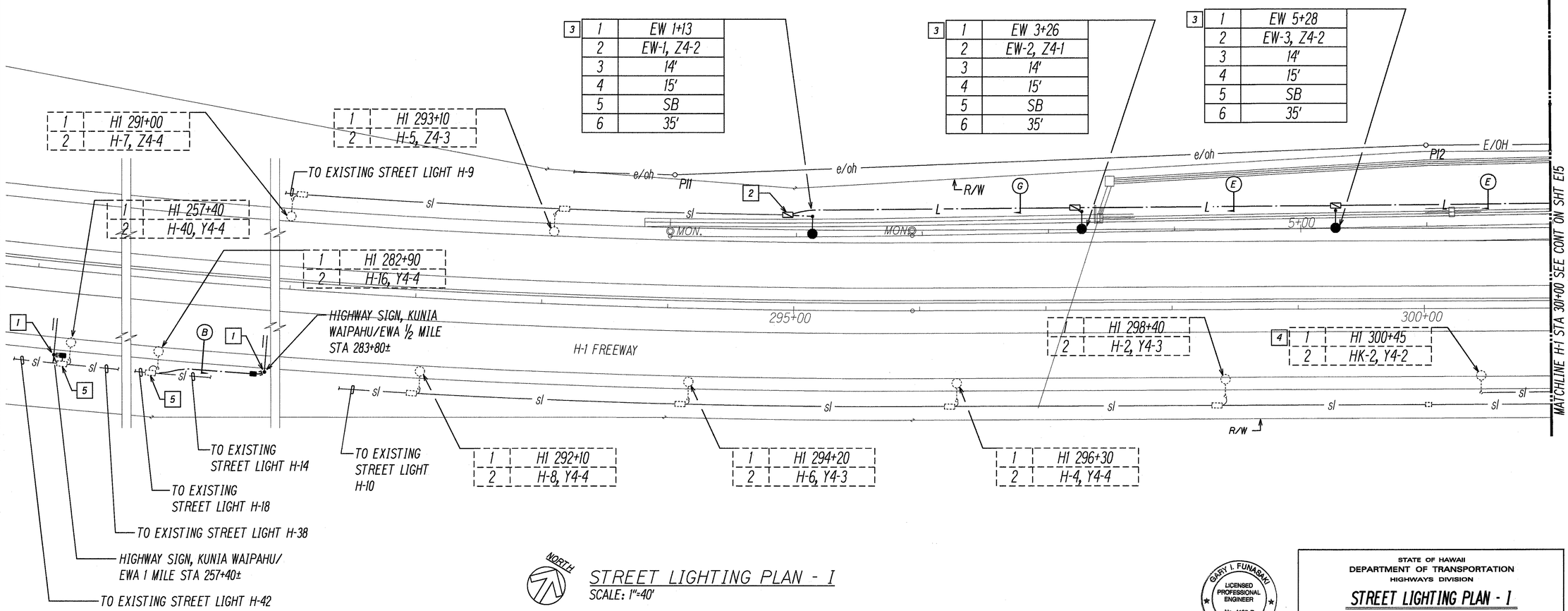

NORTH

STREET LIGHTING PLAN - I
SCALE: 1"=40'

40' 20' 0 40' 80' 120'
SCALE: 1"=40'
GRAPHIC SCALE

ORIGINAL PLAN	SURVEY PLOTTED BY	DATE
	DRAWN BY	
	TRACED BY	
NOTE BOOK	DESIGNED BY	
	QUANTITIES BY	
No.	CHECKED BY	

LAST SAVE: 10/07/97 @ 10:34:46 BY: GH PLOT SC: 1=40
G:\HIGH\PROJECTS\98380\1\SH E14

GARY I. FUNASAKI
LICENSED PROFESSIONAL ENGINEER
No. 4195-E
HAWAII, U.S.A.

THIS WORK WAS PREPARED BY ME OR UNDER MY SUPERVISION.
6 NOV 1997

STATE OF HAWAII
DEPARTMENT OF TRANSPORTATION
HIGHWAYS DIVISION

STREET LIGHTING PLAN - I

INTERSTATE ROUTE H-1
Kunia Interchange Improvements
F.A.I. Project No IM-HI-1(219)

SCALE: AS NOTED DATE: OCT. 1997

SHEET No. E14 OF 43 SHEETS

FED. ROAD DIST. NO.	STATE	FED. AID PROJ. NO.	FISCAL YEAR	SHEET NO.	TOTAL SHEETS
HAWAII	HAW.	IM-HI-1(219)	1998	236	378

NOTES:

1. UTILITY POLE PROVIDED BY HECO.
2. POWER/SIGNAL OVERHEAD LINES PROVIDED BY RESPECTIVE UTILITY CO.
3. HIGHWAY SIGN, STUB-OUT 2"C WITH PULLWIRE TO SIGN BASE LOCATION. SEE SHT T4 FOR SIGNING PLAN.
4. BREAK INTO EXISTING STREET LIGHTING PULLBOX AND EXTEND 2"C, 2#8, #8 GND TO HIGHWAY SIGN PULLBOX. PROVIDE SLACK CABLE WITHIN HIGHWAY SIGN PULLBOX TO PROVIDE CONNECTION TO HIGHWAY SIGN LIGHTING. SEE SHT E33 FOR HIGHWAY SIGN LIGHTING WIRING DIAGRAM.
5. UTILITY POLE PROVIDED BY HTCO.
6. SEE DETAIL A / E15|E26
7. SEE DETAIL B / E15|E26
8. REPLACE EXISTING 240V BALLAST WITH 480V BALLAST. PROVIDE NEW I.D. TAG, SEE SHEET E42.

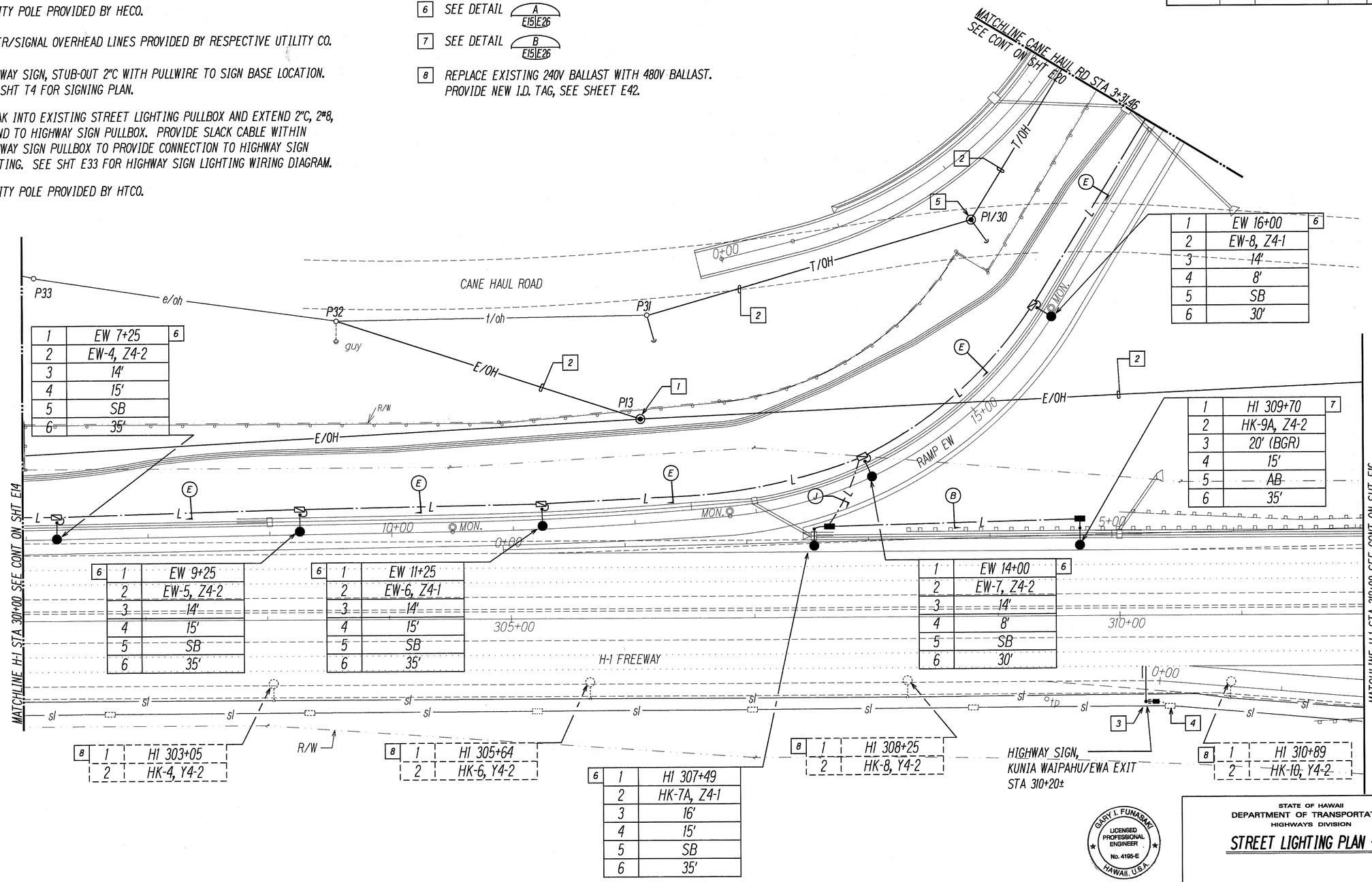

1	EW 7+25	6
2	EW-4, Z4-2	
3	14'	
4	15'	
5	SB	
6	35'	

1	EW 16+00	6
2	EW-8, Z4-1	
3	14'	
4	8'	
5	SB	
6	30'	

1	H1 309+70	7
2	HK-9A, Z4-2	
3	20' (BGR)	
4	15'	
5	AB	
6	35'	

1	EW 9+25	6
2	EW-5, Z4-2	
3	14'	
4	15'	
5	SB	
6	35'	

1	EW 11+25	6
2	EW-6, Z4-1	
3	14'	
4	15'	
5	SB	
6	35'	

1	EW 14+00	6
2	EW-7, Z4-2	
3	14'	
4	8'	
5	SB	
6	30'	

1	H1 303+05	8
2	HK-4, Y4-2	

1	H1 305+64	8
2	HK-6, Y4-2	

1	H1 307+49	6
2	HK-7A, Z4-1	
3	16'	
4	15'	
5	SB	
6	35'	

1	H1 308+25	8
2	HK-8, Y4-2	

1	H1 310+89	8
2	HK-10, Y4-2	

40' 20' 0 40' 80' 120'
SCALE: 1"=40'
GRAPHIC SCALE

NORTH

STREET LIGHTING PLAN - II
SCALE: 1"=40'

GARY I. FUNASAKI
LICENSED PROFESSIONAL ENGINEER
No. 4195-E
HAWAII, U.S.A.

THIS WORK WAS PREPARED BY ME OR UNDER MY SUPERVISION.
6 NOV 1997

STATE OF HAWAII
DEPARTMENT OF TRANSPORTATION
HIGHWAYS DIVISION

STREET LIGHTING PLAN - II

INTERSTATE ROUTE H-1
Kunia Interchange Improvements
F.A.I. Project No IM-H1-1(219)

SCALE: AS NOTED DATE: OCT. 1997

SHEET No. E15 OF 43 SHEETS

ORIGINAL PLAN | NOTE BOOK | SURVEY PLOTTED BY | DRAWN BY | TRACED BY | DESIGNED BY | QUANTITIES BY | CHECKED BY | DATE | No. | REVISIONS

U:\ST_CIVIL\DIV01\H1\IM-H1-1(219)\CS\H1_CS_E15.DGN
G:\ROAD\PROJECTS\INTERCHANGE\KUNIA\KUNIA_WB\STREET LIGHTING\

236

FED. ROAD DIST. NO.	STATE	FED. AID PROJ. NO.	FISCAL YEAR	SHEET NO.	TOTAL SHEETS
HAWAII	HAW.	IM-HI-1(219)	1998	237	378

NOTES:

1. UTILITY POLE PROVIDED BY HECO.
2. POWER/SIGNAL OVERHEAD LINES PROVIDED BY RESPECTIVE UTILITY CO.
3. INTERCEPT EXISTING DIRECT BURIED CABLE WITH PULLBOX.
4. BREAK INTO EXISTING HANDHOLE.
5. SEE DETAIL A E16 E26
6. SEE DETAIL B E16 E26
7. REPLACE EXISTING 240V BALLAST WITH 480V BALLAST. PROVIDE NEW I.D. TAG, SEE SHEET E42.
8. COUPLE TO EXISTING CONDUIT. PROVIDE NEW CABLE AS REQUIRED.

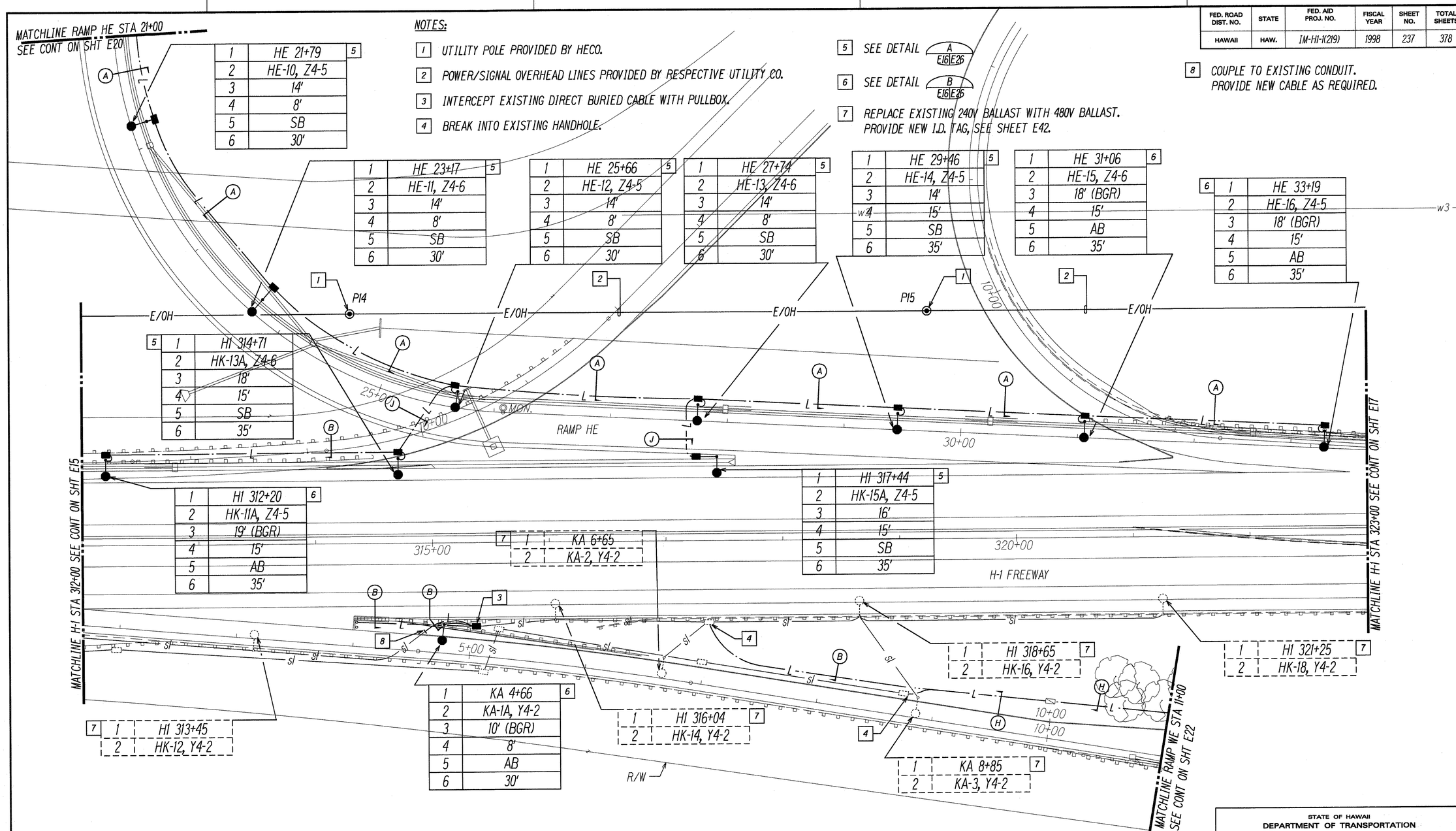

NORTH

STREET LIGHTING PLAN - III
SCALE: 1"=40'

40' 20' 0 40' 80' 120'
SCALE: 1"=40'
GRAPHIC SCALE

ORIGINAL PLAN	DATE
SURVEY PLOTTED BY	
DRAWN BY	
TRACED BY	
DESIGNED BY	
QUANTITIES BY	
CHECKED BY	
NOTE BOOK	
No.	

LAST SAVED: 10/07/97 @ 14:43 BY: GR PLOT SC: 1=10
G:\ACAD\PROJECTS-2000\IM-EB_SREPS_1998\H-1\SHEETS

GARY I. FUNASAKI
LICENSED PROFESSIONAL ENGINEER
No. 4195-E
HAWAII, U.S.A.

THIS WORK WAS PREPARED BY ME OR UNDER MY SUPERVISION.
6 NOV 1997

STATE OF HAWAII
DEPARTMENT OF TRANSPORTATION
HIGHWAYS DIVISION

STREET LIGHTING PLAN - III

INTERSTATE ROUTE H-1
Kunia Interchange Improvements
F.A.I. Project No IM-HI-1(219)

SCALE: AS NOTED DATE: OCT. 1997

SHEET No. E16 OF 43 SHEETS

FED. ROAD DIST. NO.	STATE	FED. AID PROJ. NO.	FISCAL YEAR	SHEET NO.	TOTAL SHEETS
HAWAII	HAW.	IM-H1-1(219)	1998	238	378

NOTES:

1. UTILITY POLE PROVIDED BY HECO.
2. POWER/SIGNAL OVERHEAD LINES PROVIDED BY RESPECTIVE UTILITY CO.
3. HECO 12KV MID-SPAN TAP TO ARMY BUNKER SERVICE.
4. SEE DETAIL B (E17/E26)
5. INTERCEPT EXISTING DIRECT BURIED CABLE WITH PULLBOX.
6. HIGHWAY SIGN, STUB-OUT 2"C WITH PULLWIRE TO SIGN BASE LOCATION. SEE SHT T6 FOR SIGNING PLAN.
7. PROVIDE SLACK CABLE WITHIN HIGHWAY SIGN PULLBOX TO PROVIDE CONNECTION TO HIGHWAY SIGN LIGHTING.
8. HECO 5' X 7' PULLBOX, VERIFY EXACT LOCATION IN THE FIELD.
9. CABLES REMOVED BY HECO, ABANDON DUCTLINE IN PLACE.
10. REPLACE EXISTING 240V BALLAST WITH 480V BALLAST. PROVIDE NEW I.D. TAG, SEE SHEET E42.
11. SEE DETAIL A (E17/E26)
12. HECO TO PROVIDE CONDUIT OPENINGS INTO PULLBOX. EXTEND CONDUITS TO PULLBOX AND REPAIR PULLBOX TO MATCH EXISTING CONDITION. COORDINATE LOCATION OF CONDUIT ENTRY INTO PULLBOX WITH HECO.
13. DUCTLINE TO CROSS UNDER 24" CULVERT.
14. SEE C (E17/E33) FOR TYPICAL DUCT SECTION BEHIND RETAINING WALL.

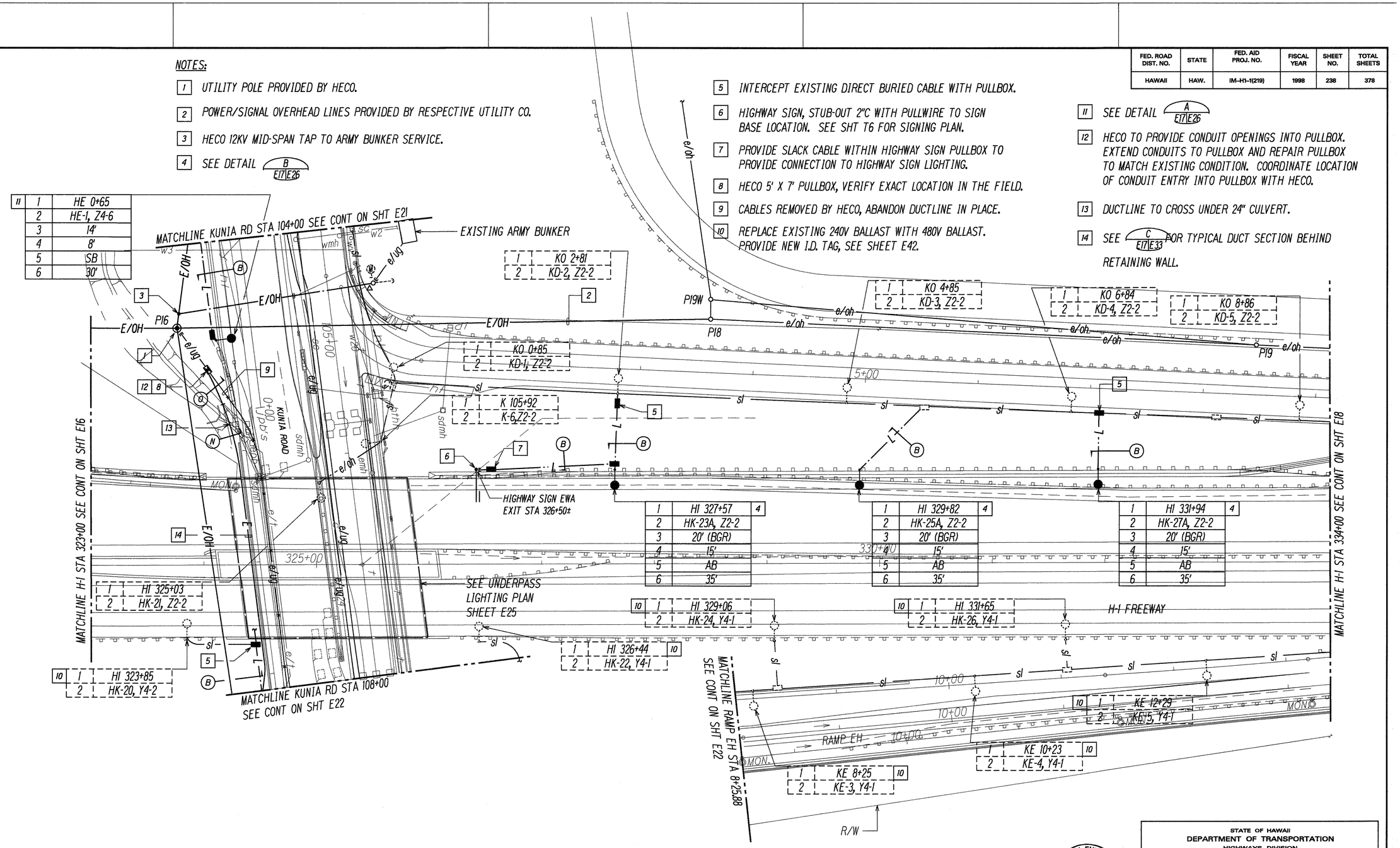

40' 20' 0 40' 80' 120'
SCALE: 1"=40'
GRAPHIC SCALE

NORTH

STREET LIGHTING PLAN - IV
SCALE: 1"=40'

DATE	REVISION
4/9/99	RELOCATED UNDERGROUND ELECTRICAL LINES BETWEEN KUNIA ROAD BL STA. 104+40± AND STA. 108+20± RT., REVISED NOTES 8 & 9 AND ADDED NOTES 12, 13 & 14

GARY I. FUNASAKI
LICENSED PROFESSIONAL ENGINEER
No. 4196-E
HAWAII, U.S.A.

THIS WORK WAS PREPARED BY ME OR UNDER MY SUPERVISION.

STATE OF HAWAII
DEPARTMENT OF TRANSPORTATION
HIGHWAYS DIVISION

STREET LIGHTING PLAN - IV

INTERSTATE ROUTE H-1
Kunia Interchange Improvements
F.A.I. Project No IM-H1-1(219)

SCALE: AS NOTED DATE: OCT. 1997

SHEET No. E17 OF 43 SHEETS

C.O. 238

ORIGINAL PLAN | NOTE BOOK | No. | SURVEY PLOTTED BY | DRAWN BY | TRACED BY | DESIGNED BY | QUANTITIES BY | CHECKED BY | DATE

LAST SAVE: 04/09/99 ■ CUSER BY: TM PLOT SC: 1=40
DATES 11 INCH 1000 SUBMITTED

FED. ROAD DIST. NO.	STATE	FED. AID PROJ. NO.	FISCAL YEAR	SHEET NO.	TOTAL SHEETS
HAWAII	HAW.	IM-HI-1(219)	1998	239	378

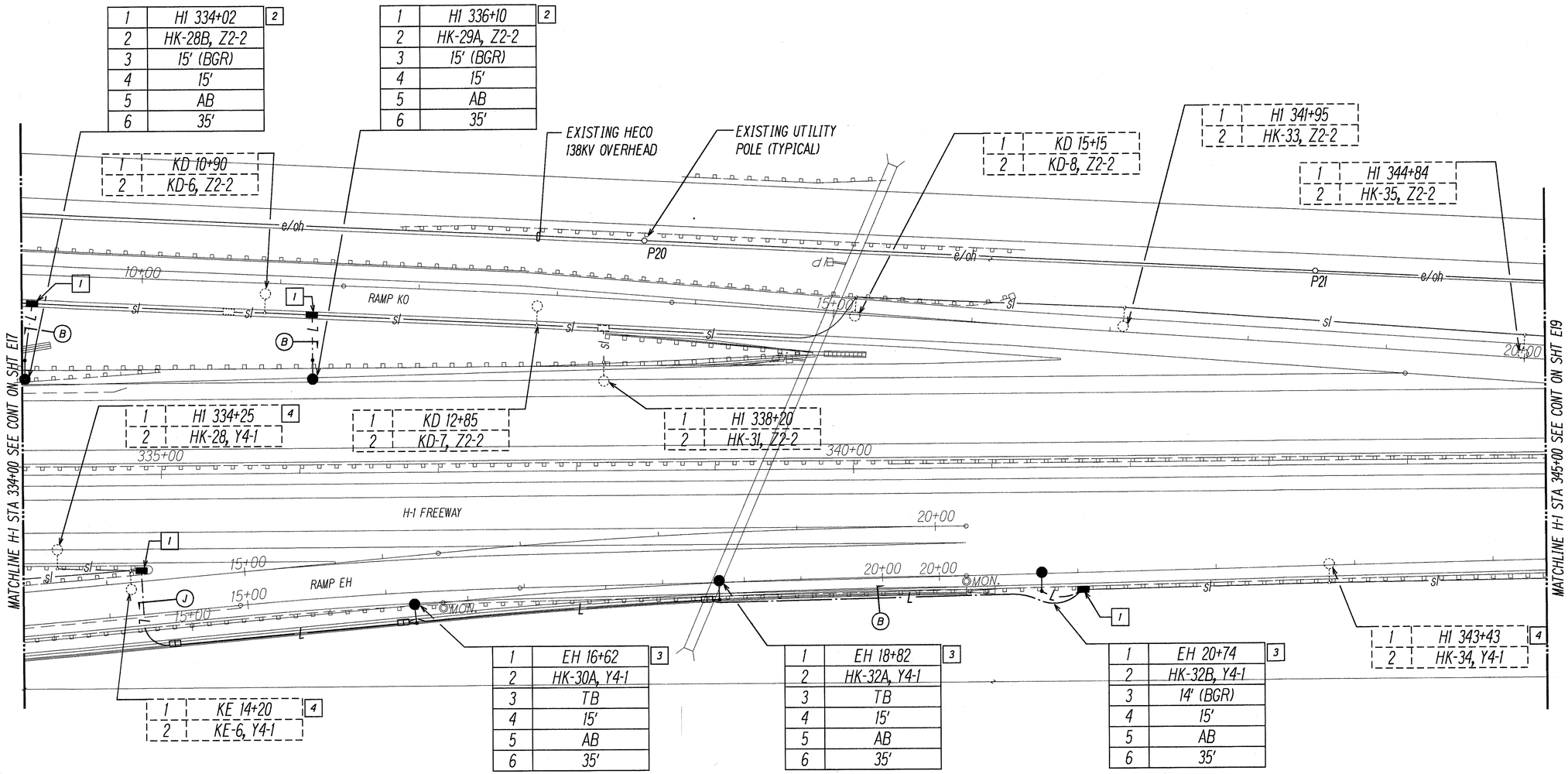

NOTES:

1. INTERCEPT EXISTING DIRECT BURIED CABLE WITH HANDHOLE.
2. SEE DETAIL B E18|E26
3. SEE DETAIL C E18|E26
4. REPLACE EXISTING 240V BALLAST WITH 480V BALLAST. PROVIDE NEW I.D. TAG, SEE SHEET E42.

NORTH

STREET LIGHTING PLAN - V

SCALE: 1"=40'

40' 20' 0 40' 80' 120'

SCALE: 1"=40'

GRAPHIC SCALE

ORIGINAL PLAN	SURVEY PLOTTED BY	DATE
	DRAWN BY	"
NOTE BOOK	TRACED BY	"
No.	DESIGNED BY	"
	QUANTITIES BY	"
	CHECKED BY	"

LAST SAVE: 10/07/97 ● HAUS, EH, GN PLOT SC: 1=40
G:\ADOL\PROJECTS\19206\HAR-E18 SHEETS, 19206HO-1SN06

GARY I. FUNASAKI
LICENSED PROFESSIONAL ENGINEER
No. 4195-E
HAWAII, U.S.A.

THIS WORK WAS PREPARED BY ME OR UNDER MY SUPERVISION.
6 NOV 1997

STATE OF HAWAII
DEPARTMENT OF TRANSPORTATION
HIGHWAYS DIVISION

STREET LIGHTING PLAN - V

INTERSTATE ROUTE H-1
Kunia Interchange Improvements
F.A.I. Project No IM-HI-1(219)

SCALE: AS NOTED DATE: OCT. 1997

SHEET No. E18 OF 43 SHEETS

FED. ROAD DIST. NO.	STATE	FED. AID PROJ. NO.	FISCAL YEAR	SHEET NO.	TOTAL SHEETS
HAWAII	HAW.	IM-HI-1(219)	1998	240	378

NOTE(S):

1. REPLACE EXISTING 240V BALLAST WITH 480V BALLAST. PROVIDE NEW I.D. TAG, SEE SHEET E42.

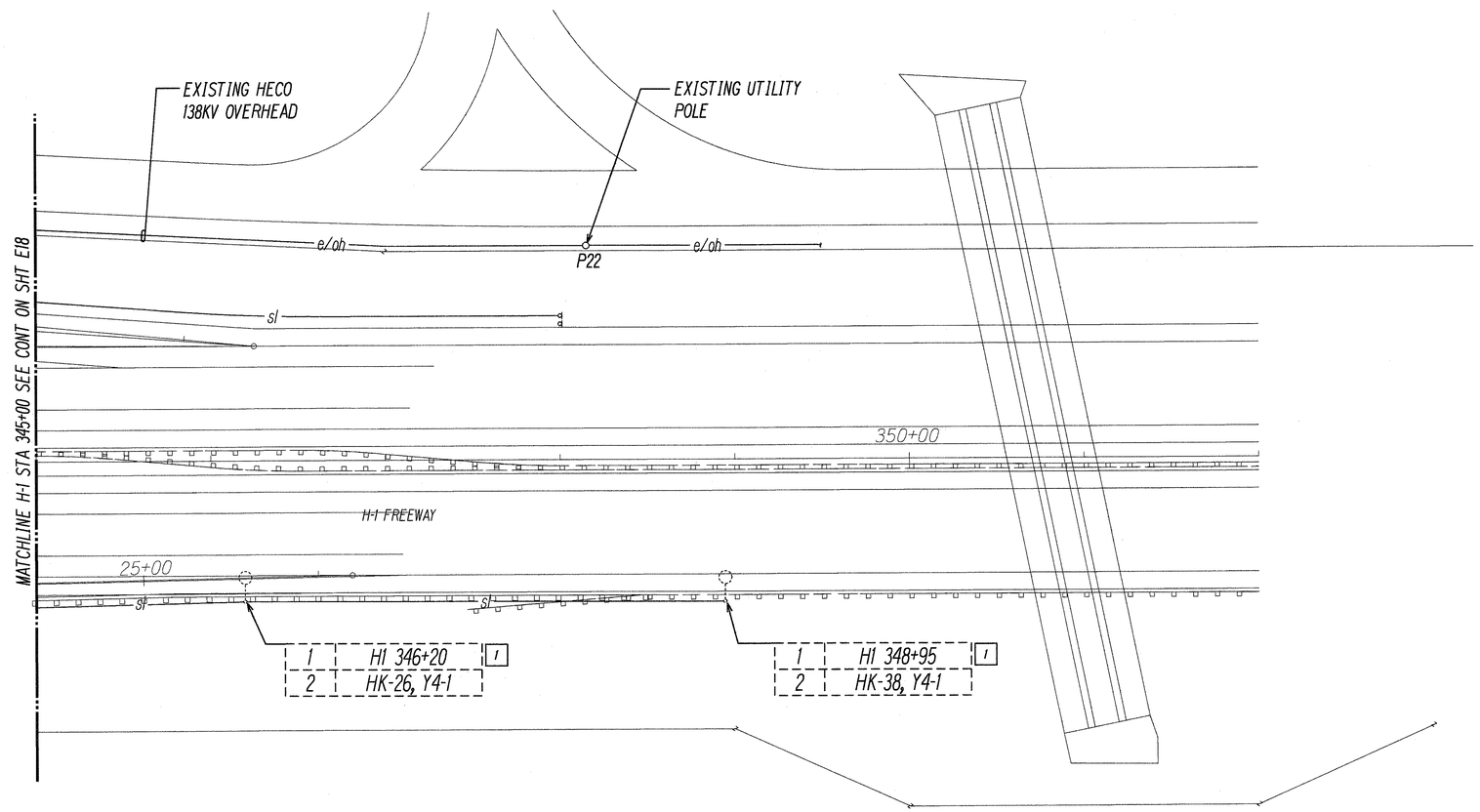

NORTH

STREET LIGHTING PLAN - VI

SCALE: 1"=40'

40' 20' 0 40' 80' 120'

SCALE: 1"=40'

GRAPHIC SCALE

ORIGINAL PLAN		
NOTE BOOK		
	No.	DATE
SURVEY PLOTTED BY		
DRAWN BY		
TRACED BY		
DESIGNED BY		
QUANTITIES BY		
CHECKED BY		

LAST SAVED: 11/07/97 @ 10:08 BY: GR PLOT SC: 1=40
G:\ADO\PROJECTS\98088\IUA\E19 TREF'S: 1D9098=1D9098

GARY I. FUNASAKI
LICENSED PROFESSIONAL ENGINEER
No. 4195-E
HAWAII, U.S.A.

THIS WORK WAS PREPARED BY ME OR UNDER MY SUPERVISION.

6 Nov 1997

STATE OF HAWAII
DEPARTMENT OF TRANSPORTATION
HIGHWAYS DIVISION

STREET LIGHTING PLAN - VI

INTERSTATE ROUTE H-1
Kunia Interchange Improvements
F.A.I. Project No IM-HI-1(219)

SCALE: AS NOTED DATE: OCT. 1997

SHEET No. E19 OF 43 SHEETS

FED. ROAD DIST. NO.	STATE	FED. AID PROJ. NO.	FISCAL YEAR	SHEET NO.	TOTAL SHEETS
HAWAII	HAW.	IM-H1-1(219)	1998	241	378

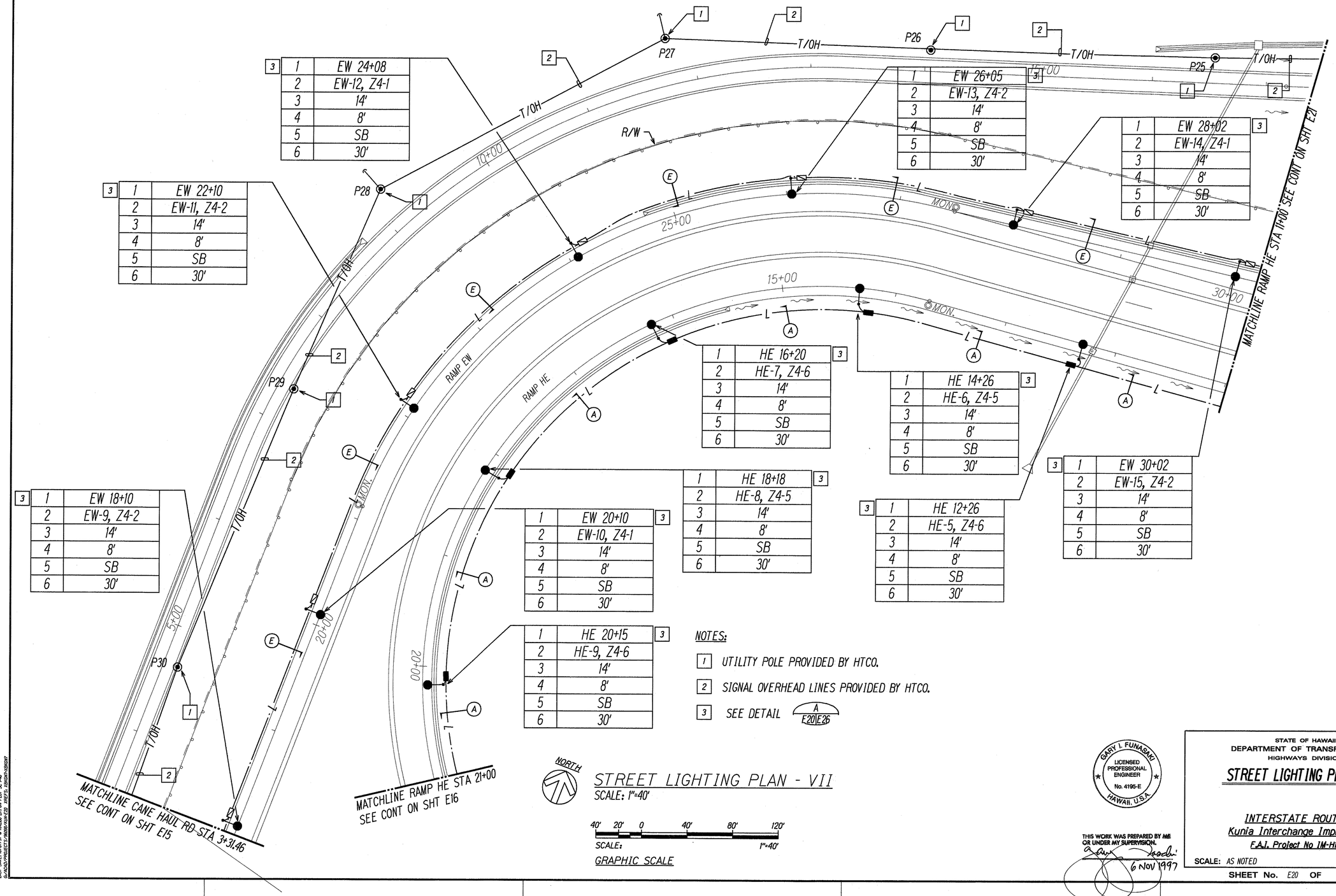

3	
1	EW 24+08
2	EW-12, Z4-1
3	14'
4	8'
5	SB
6	30'

3	
1	EW 22+10
2	EW-11, Z4-2
3	14'
4	8'
5	SB
6	30'

3	
1	EW 18+10
2	EW-9, Z4-2
3	14'
4	8'
5	SB
6	30'

3	
1	EW 26+05
2	EW-13, Z4-2
3	14'
4	8'
5	SB
6	30'

3	
1	EW 28+02
2	EW-14, Z4-1
3	14'
4	8'
5	SB
6	30'

3	
1	EW 30+02
2	EW-15, Z4-2
3	14'
4	8'
5	SB
6	30'

3	
1	HE 16+20
2	HE-7, Z4-6
3	14'
4	8'
5	SB
6	30'

3	
1	HE 14+26
2	HE-6, Z4-5
3	14'
4	8'
5	SB
6	30'

3	
1	HE 18+18
2	HE-8, Z4-5
3	14'
4	8'
5	SB
6	30'

3	
1	HE 12+26
2	HE-5, Z4-6
3	14'
4	8'
5	SB
6	30'

3	
1	EW 20+10
2	EW-10, Z4-1
3	14'
4	8'
5	SB
6	30'

3	
1	HE 20+15
2	HE-9, Z4-6
3	14'
4	8'
5	SB
6	30'

NOTES:

1. UTILITY POLE PROVIDED BY HTCO.
2. SIGNAL OVERHEAD LINES PROVIDED BY HTCO.
3. SEE DETAIL A / E20 E26

STREET LIGHTING PLAN - VII

SCALE: 1"=40'

SCALE: 40' 20' 0 40' 80' 120'
1"=40'
GRAPHIC SCALE

GARY I. FUNASAKI
LICENSED PROFESSIONAL ENGINEER
No. 4195-E
HAWAII, U.S.A.

THIS WORK WAS PREPARED BY ME OR UNDER MY SUPERVISION.
6 NOV 1997

STATE OF HAWAII
DEPARTMENT OF TRANSPORTATION
HIGHWAYS DIVISION

STREET LIGHTING PLAN - VII

INTERSTATE ROUTE H-1
Kunia Interchange Improvements
F.A.I. Project No IM-H1-1(219)

SCALE: AS NOTED DATE: OCT. 1997

SHEET No. E20 OF 43 SHEETS

ORIGINAL PLAN | SURVEY PLOTTED BY | DRAWN BY | TRACED BY | DESIGNED BY | QUANTITIES BY | CHECKED BY | DATE
NOTE BOOK | No.

LAST SAVED: 9/10/19 ● 14:08 BY: ON PLOT SC: 1=40
G:\ADCPROJECTS\IM0001\IM-E20_TRE7.5_TRENCH.DGN

FED. ROAD DIST. NO.	STATE	FED. AID PROJ. NO.	FISCAL YEAR	SHEET NO.	TOTAL SHEETS
HAWAII	HAW.	IM-HI-1(219)	1998	242	378

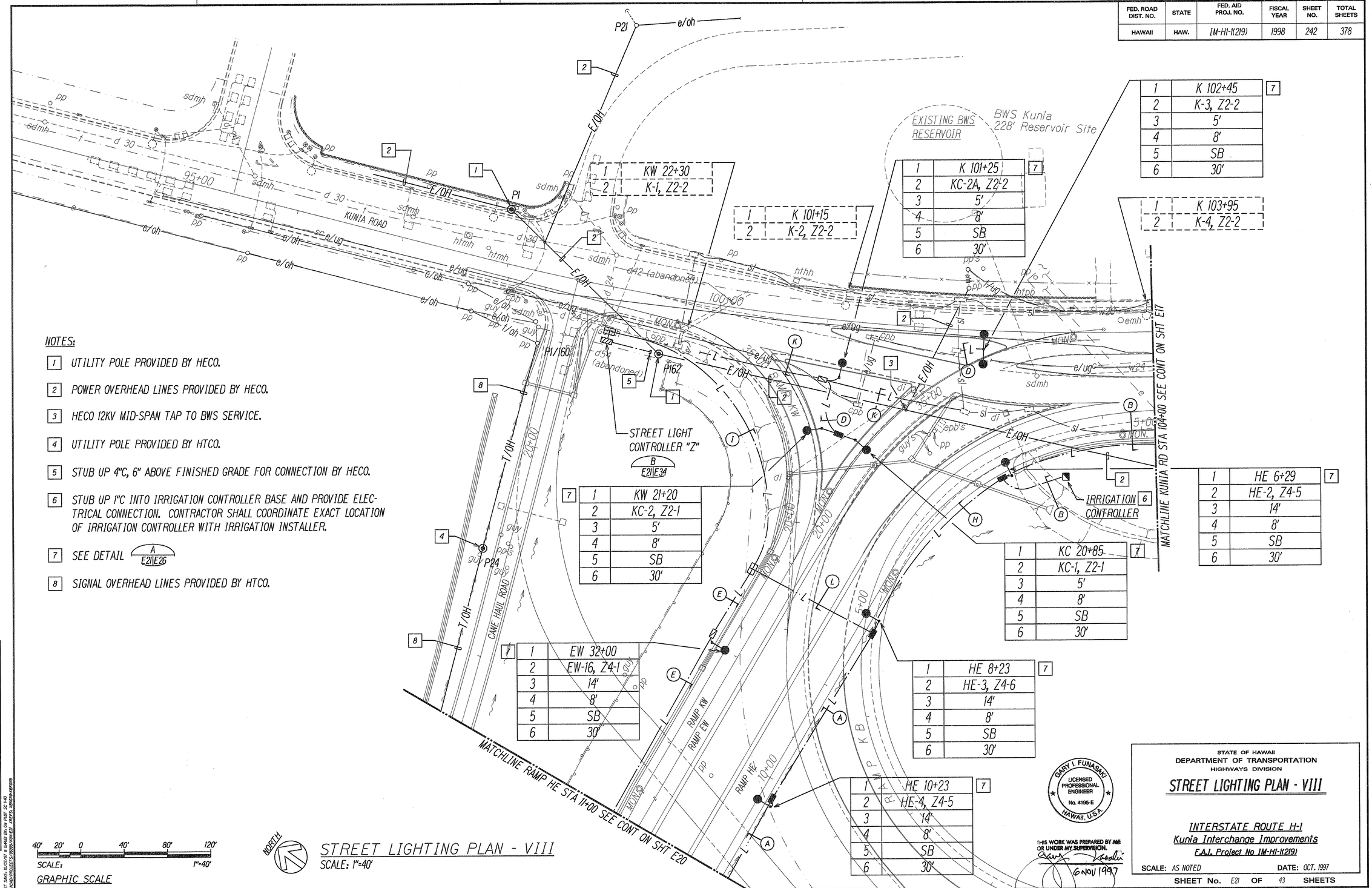

1	KW 22+30
2	K-1, Z2-2

1	K 101+15
2	K-2, Z2-2

1	K 101+25
2	KC-2A, Z2-2
3	5'
4	8'
5	SB
6	30'

1	K 102+45
2	K-3, Z2-2
3	5'
4	8'
5	SB
6	30'

1	K 103+95
2	K-4, Z2-2

1	KW 21+20
2	KC-2, Z2-1
3	5'
4	8'
5	SB
6	30'

1	KC 20+85
2	KC-1, Z2-1
3	5'
4	8'
5	SB
6	30'

1	HE 6+29
2	HE-2, Z4-5
3	14'
4	8'
5	SB
6	30'

1	EW 32+00
2	EW-16, Z4-1
3	14'
4	8'
5	SB
6	30'

1	HE 8+23
2	HE-3, Z4-6
3	14'
4	8'
5	SB
6	30'

1	HE 10+23
2	HE-4, Z4-5
3	14'
4	8'
5	SB
6	30'

NOTES:

1. UTILITY POLE PROVIDED BY HECO.
2. POWER OVERHEAD LINES PROVIDED BY HECO.
3. HECO 12KV MID-SPAN TAP TO BWS SERVICE.
4. UTILITY POLE PROVIDED BY HTCO.
5. STUB UP 4"C, 6" ABOVE FINISHED GRADE FOR CONNECTION BY HECO.
6. STUB UP 1"C INTO IRRIGATION CONTROLLER BASE AND PROVIDE ELECTRICAL CONNECTION. CONTRACTOR SHALL COORDINATE EXACT LOCATION OF IRRIGATION CONTROLLER WITH IRRIGATION INSTALLER.
7. SEE DETAIL A E21 E26
8. SIGNAL OVERHEAD LINES PROVIDED BY HTCO.

ORIGINAL PLAN	SURVEY PLOTTED BY	DATE
	DRAWN BY	"
	TRACED BY	"
NOTE BOOK	DESIGNED BY	"
	QUANTITIES BY	"
No.	CHECKED BY	"

LAST SAVED: 10/07/97 @ 14:44:40 BY: GH PLOT SC: 1=40
G:\HDOT\PROJECTS\98080\DWG\E23 DATE: 23, 1998/08:42:00:08

40' 20' 0 40' 80' 120'
SCALE: 1"=40'
GRAPHIC SCALE

NORTH

STREET LIGHTING PLAN - VIII
SCALE: 1"=40'

STATE OF HAWAII
DEPARTMENT OF TRANSPORTATION
HIGHWAYS DIVISION

STREET LIGHTING PLAN - VIII

INTERSTATE ROUTE H-1
Kunia Interchange Improvements
F.A.I. Project No IM-HI-1(219)

SCALE: AS NOTED DATE: OCT. 1997

SHEET No. E21 OF 43 SHEETS

242

FED. ROAD DIST. NO.	STATE	FED. AID PROJ. NO.	FISCAL YEAR	SHEET NO.	TOTAL SHEETS
HAWAII	HAW.	IM-H1-1(219)	1998	243	378

NOTES:

1. UTILITY POLE PROVIDED BY RESPECTIVE UTILITY CO.
2. POWER/SIGNAL OVERHEAD LINES PROVIDED BY RESPECTIVE UTILITY CO.
3. OCEANIC CABLE TO INTERCEPT EXISTING CONDUIT AND EXTEND RISER TO RELOCATED POLE.
4. STUB UP 3"C, 6" ABOVE FINISHED GRADE FOR CONNECTION BY HECO.
5. SEE DETAIL A E22|E26 6. SEE DETAIL C E22|E26
7. HECO 5' X 7' PULLBOX, VERIFY EXACT LOCATION IN THE FIELD.
8. UNDERGROUND DUCTLINE INSTALLED BY HECO.
9. REPLACE EXISTING 240V BALLAST WITH 480V BALLAST. PROVIDE NEW I.D. TAG, SEE SHEET E42.
10. INTERCEPT EXISTING DIRECT BURIED CABLE WITH PULLBOX.
11. EXTEND CONDUIT, COUPLE TO EXISTING & PROVIDE NEW WIRING AS REQUIRED.
12. HECO TO PROVIDE CONDUIT OPENINGS INTO PULLBOX. EXTEND CONDUITS TO PULLBOX AND REPAIR PULLBOX TO MATCH EXISTING CONDITION. COORDINATE LOCATION OF CONDUIT ENTRY INTO PULLBOX WITH HECO.
13. CABLES REMOVED BY HECO, ABANDON DUCTLINE IN PLACE.

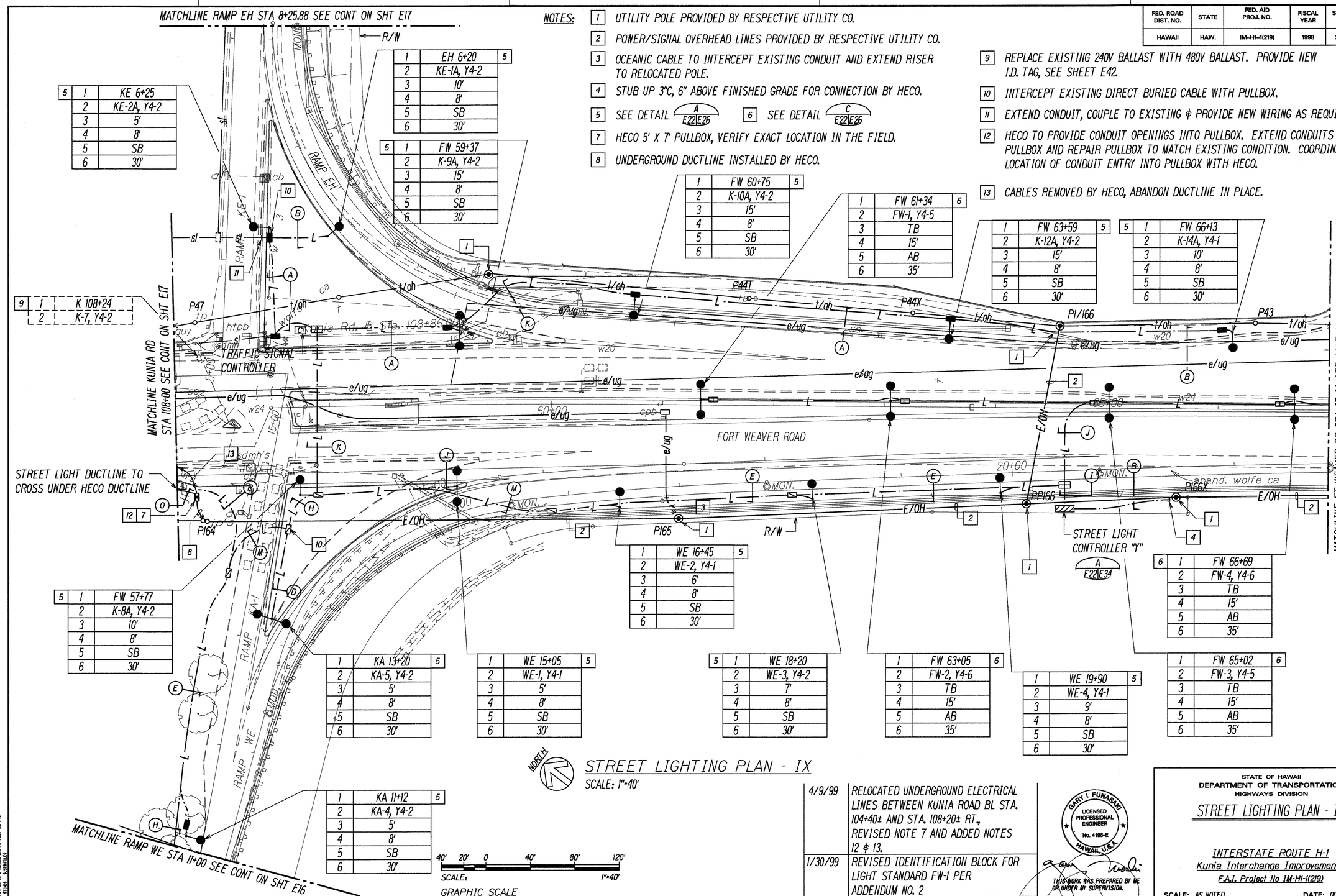

5		
1	KE 6+25	
2	KE-2A, Y4-2	
3	5'	
4	8'	
5	SB	
6	30'	

9		
1	K 108+24	
2	K-7, Y4-2	

5		
1	EH 6+20	
2	KE-1A, Y4-2	
3	10'	
4	8'	
5	SB	
6	30'	

5		
1	FW 59+37	
2	K-9A, Y4-2	
3	15'	
4	8'	
5	SB	
6	30'	

5		
1	FW 57+77	
2	K-8A, Y4-2	
3	10'	
4	8'	
5	SB	
6	30'	

1	FW 60+75	5
2	K-10A, Y4-2	
3	15'	
4	8'	
5	SB	
6	30'	

1	FW 61+34	6
2	FW-1, Y4-5	
3	TB	
4	15'	
5	AB	
6	35'	

1	FW 63+59	5
2	K-12A, Y4-2	
3	15'	
4	8'	
5	SB	
6	30'	

5		
1	FW 66+13	
2	K-14A, Y4-1	
3	10'	
4	8'	
5	SB	
6	30'	

1	WE 16+45	5
2	WE-2, Y4-1	
3	6'	
4	8'	
5	SB	
6	30'	

6		
1	FW 66+69	
2	FW-4, Y4-6	
3	TB	
4	15'	
5	AB	
6	35'	

1	KA 13+20	5
2	KA-5, Y4-2	
3	5'	
4	8'	
5	SB	
6	30'	

1	WE 15+05	5
2	WE-1, Y4-1	
3	5'	
4	8'	
5	SB	
6	30'	

5		
1	WE 18+20	
2	WE-3, Y4-2	
3	7'	
4	8'	
5	SB	
6	30'	

1	FW 63+05	6
2	FW-2, Y4-6	
3	TB	
4	15'	
5	AB	
6	35'	

1	WE 19+90	5
2	WE-4, Y4-1	
3	9'	
4	8'	
5	SB	
6	30'	

1	FW 65+02	6
2	FW-3, Y4-5	
3	TB	
4	15'	
5	AB	
6	35'	

1	KA 11+12	5
2	KA-4, Y4-2	
3	5'	
4	8'	
5	SB	
6	30'	

STREET LIGHTING PLAN - IX

SCALE: 1"=40'

40' 20' 0 40' 80' 120'
SCALE: 1"=40'
GRAPHIC SCALE

DATE	REVISION
4/9/99	RELOCATED UNDERGROUND ELECTRICAL LINES BETWEEN KUNIA ROAD BL STA. 104+40± AND STA. 108+20± RT., REVISED NOTE 7 AND ADDED NOTES 12 & 13.
1/30/99	REVISED IDENTIFICATION BLOCK FOR LIGHT STANDARD FW-1 PER ADDENDUM NO. 2

GARY I. FUNASAKI LICENSED PROFESSIONAL ENGINEER No. 4186-E HAWAII, U.S.A.

THIS WORK WAS PREPARED BY ME OR UNDER MY SUPERVISION.

STATE OF HAWAII
DEPARTMENT OF TRANSPORTATION
HIGHWAYS DIVISION

STREET LIGHTING PLAN - IX

INTERSTATE ROUTE H-1
Kunia Interchange Improvements
F.A.I. Project No IM-HI-1(219)

SCALE: AS NOTED DATE: OCT. 1997

SHEET No. E22 OF 43 SHEETS

ORIGINAL PLAN | SURVEY PLOTTED BY | DRAWN BY | TRACED BY | DESIGNED BY | QUANTITIES BY | CHECKED BY | DATE
NOTE BOOK | No.

LAST SAVE: 04/09/99 @ 13:56:56 BY: TM PLOT SC: 1=40
DGN FILE: E22.DGN

C.O. 243R

FED. ROAD DIST. NO.	STATE	FED. AID PROJ. NO.	FISCAL YEAR	SHEET NO.	TOTAL SHEETS
HAWAII	HAW.	IM-HI-1(219)	1998	244	378

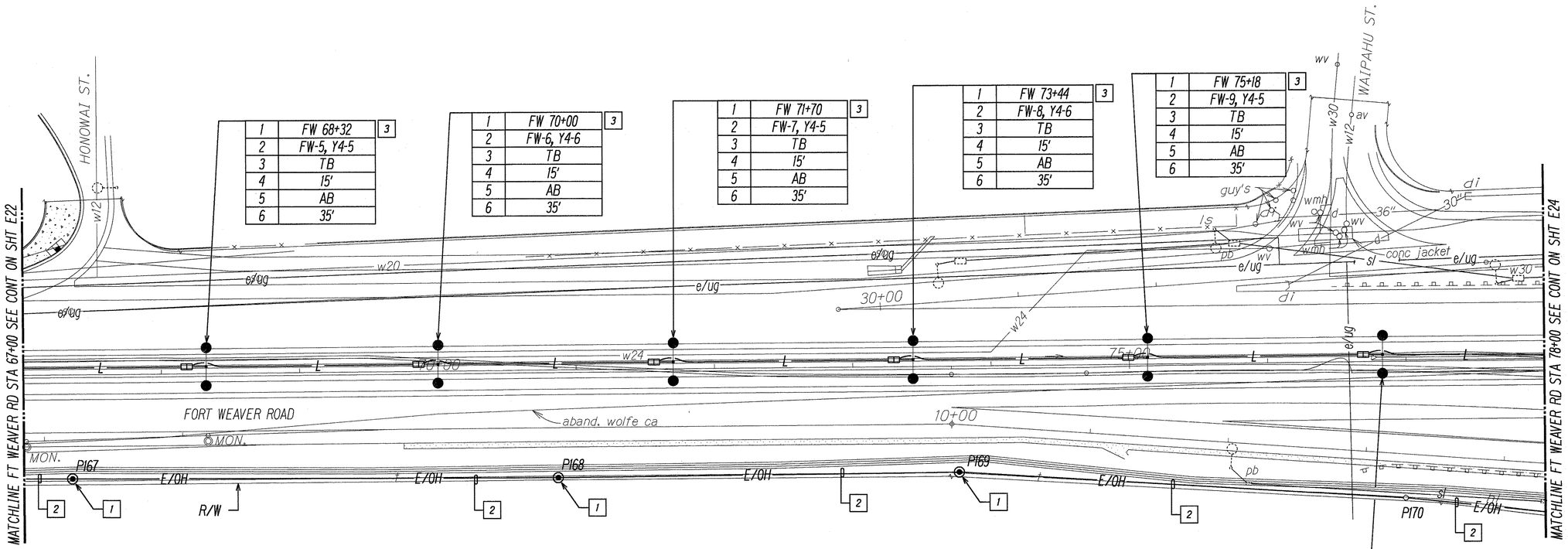

1	FW 68+32
2	FW-5, Y4-5
3	TB
4	15'
5	AB
6	35'

3

1	FW 70+00
2	FW-6, Y4-6
3	TB
4	15'
5	AB
6	35'

3

1	FW 71+70
2	FW-7, Y4-5
3	TB
4	15'
5	AB
6	35'

3

1	FW 73+44
2	FW-8, Y4-6
3	TB
4	15'
5	AB
6	35'

3

1	FW 75+18
2	FW-9, Y4-5
3	TB
4	15'
5	AB
6	35'

3

3

1	FW 76+83
2	FW-10, Y4-6
3	TB
4	15'
5	AB
6	35'

NORTH

STREET LIGHTING PLAN - X

SCALE: 1"=40'

NOTES:

1. UTILITY POLE PROVIDED BY HECO.
2. POWER/SIGNAL OVERHEAD LINES PROVIDED BY RESPECTIVE UTILITY CO.
3. SEE DETAIL C E23 E26

40' 20' 0 40' 80' 120'

SCALE: 1"=40'

GRAPHIC SCALE

ORIGINAL PLAN	SURVEY PLOTTED BY	DATE
	DRAWN BY	
NOTE BOOK	TRACED BY	
	DESIGNED BY	
No.	QUANTITIES BY	
	CHECKED BY	

LAST SAVE: 10/01/97 @ 14:19:52 BY: GM PLOT SC: 1=40
G:\ACAD\PROJECTS\96088\HAW-E23 (REPS.-1996)(HI-1)(219)

GARY I. FUNASAWI
LICENSED PROFESSIONAL ENGINEER
No. 4195-E
HAWAII, U.S.A.

THIS WORK WAS PREPARED BY ME OR UNDER MY SUPERVISION.

6 NOV 1997

STATE OF HAWAII
DEPARTMENT OF TRANSPORTATION
HIGHWAYS DIVISION

STREET LIGHTING PLAN - X

INTERSTATE ROUTE H-1
Kunia Interchange Improvements
F.A.I. Project No. IM-HI-1(219)

SCALE: AS NOTED DATE: OCT. 1997

SHEET No. E23 OF 43 SHEETS

FED. ROAD DIST. NO.	STATE	FED. AID PROJ. NO.	FISCAL YEAR	SHEET NO.	TOTAL SHEETS
HAWAII	HAW.	IM-HI-1(219)	1998	245	378

NOTES:

1. UTILITY POLE PROVIDED BY HECO.
2. POWER/SIGNAL OVERHEAD LINES PROVIDED BY RESPECTIVE UTILITY CO.
3. SEE DETAIL C / E24 E26

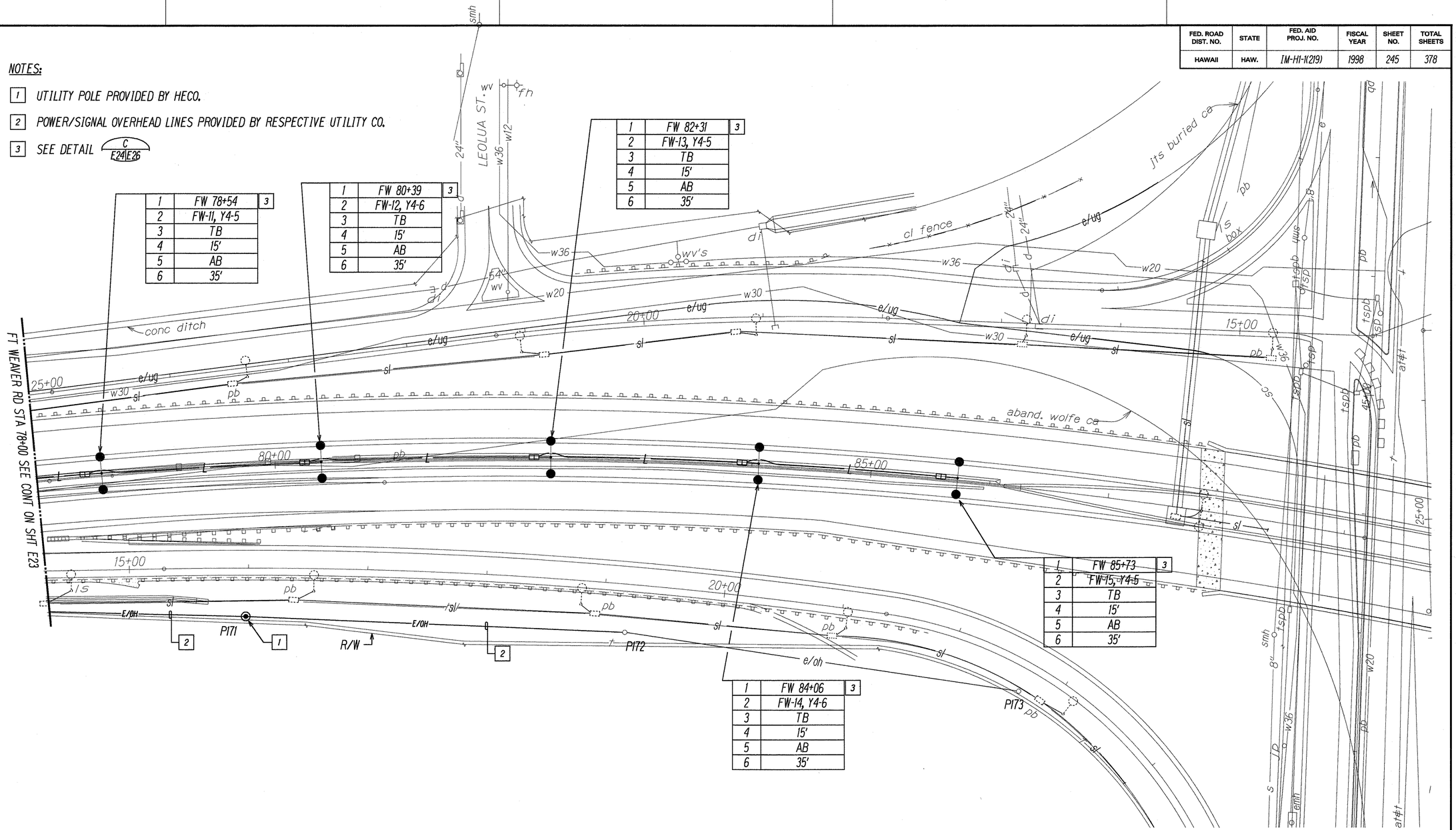

1	FW 78+54
2	FW-11, Y4-5
3	TB
4	15'
5	AB
6	35'

1	FW 80+39
2	FW-12, Y4-6
3	TB
4	15'
5	AB
6	35'

1	FW 82+31
2	FW-13, Y4-5
3	TB
4	15'
5	AB
6	35'

1	FW 84+06
2	FW-14, Y4-6
3	TB
4	15'
5	AB
6	35'

1	FW 85+73
2	FW-15, Y4-5
3	TB
4	15'
5	AB
6	35'

NORTH

STREET LIGHTING PLAN - XI

SCALE: 1"=40'

40' 20' 0 40' 80' 120'

SCALE: 1"=40'

GRAPHIC SCALE

ORIGINAL PLAN	SURVEY PLOTTED BY	DATE
	DRAWN BY	
NOTE BOOK	TRACED BY	
	DESIGNED BY	
	QUANTITIES BY	
No.	CHECKED BY	

LAST SAVED: 10/01/97 @ 16:50:07 BY: GF PLOT: SC-HB
G:\HDOT\PROJECTS\IM0001\IM-E24_1997.PS, 1280x1024

GARY I. FUNASAKI
LICENSED PROFESSIONAL ENGINEER
No. 4195-E
HAWAII, U.S.A.

THIS WORK WAS PREPARED BY ME OR UNDER MY SUPERVISION.

6 NOV 1997

STATE OF HAWAII
DEPARTMENT OF TRANSPORTATION
HIGHWAYS DIVISION

STREET LIGHTING PLAN - XI

INTERSTATE ROUTE H-1
Kunia Interchange Improvements
F.A.I. Project No IM-HI-1(219)

SCALE: AS NOTED DATE: OCT. 1997

SHEET No. E24 OF 43 SHEETS

245

FED. ROAD DIST. NO.	STATE	FED. AID PROJ. NO.	FISCAL YEAR	SHEET NO.	TOTAL SHEETS
HAWAII	HAW.	IM-HI-1(219)	1998	246	378

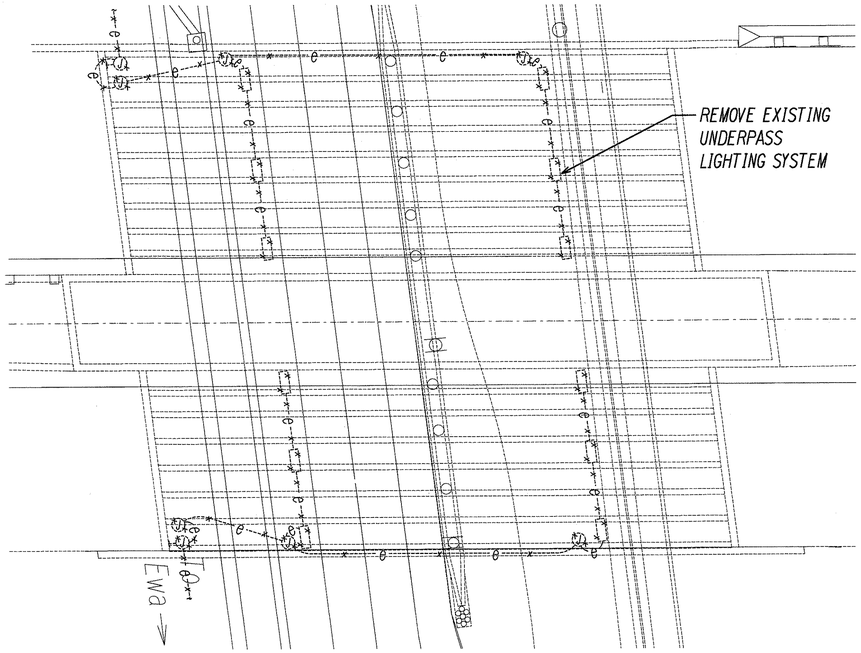

UNDERPASS LIGHTING DEMO PLAN

SCALE: 1"=20'-0"

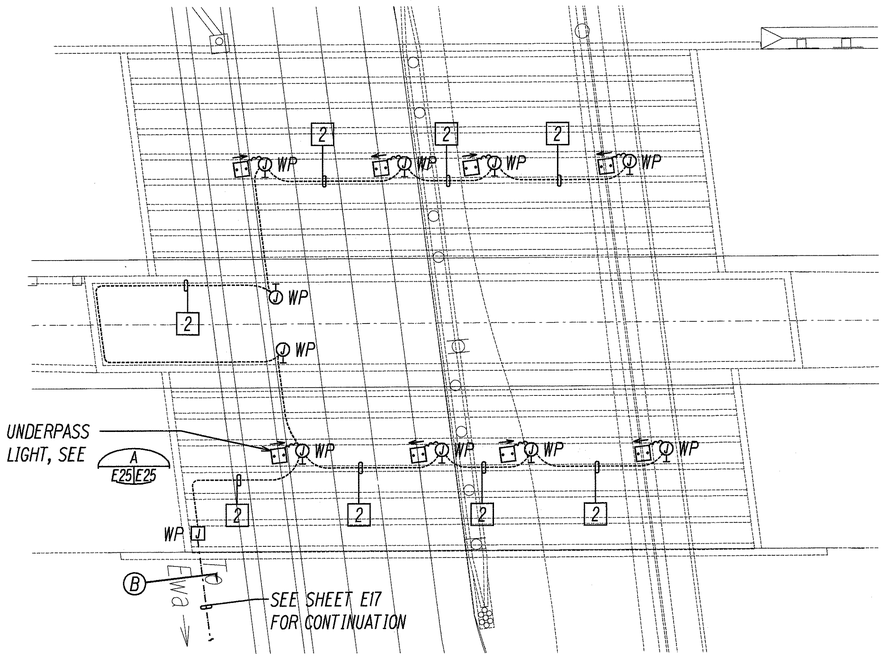

UNDERPASS LIGHTING PLAN

SCALE: 1"=20'-0"

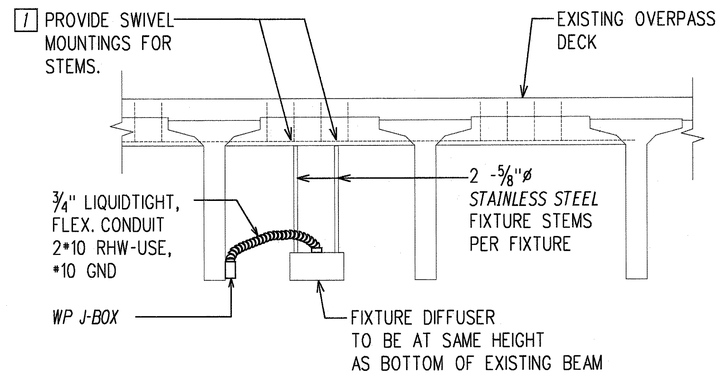

NOTE: ALL CEILING INSERTS FOR FIXTURE MOUNTING HARDWARE SHALL WITHSTAND A 100 LB PULL-OUT.

A E25 E25 TYPICAL UNDERPASS LIGHT FIXTURE. MTG. DETAIL

NOT TO SCALE

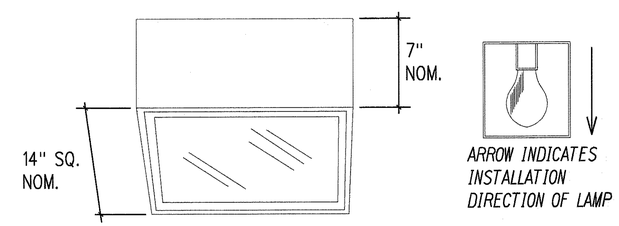

LAMP: 100W HPS, CLEAR

DESCRIPTION: EXTRUDED ALUMINUM CHASSIS WITH MITERED, WELDED CORNERS, DARK BRONZE ANODIZED FINISH, U.L. LISTED FOR WET LOCATIONS, CLEAR, TEMPERED GLASS DIFFUSER, HYDROFORMED SPECULAR ALUMINUM REFLECTOR WITH IES TYPE II OPTICS, HPF, CONSTANT WATTAGE AUTOTRANSFORMER BALLAST. AS A STANDARD FEATURE, FIXTURE SHALL BE SUITABLE FOR STEM MOUNTING .

B E25 E25 UNDERPASS LIGHT FIXTURE DETAIL

NOT TO SCALE

NOTES:

1. PROVIDE CONCRETE INSERTS FOR MOUNTING STEMS. CONCRETE INSERTS SHALL WITHSTAND A 100 LB PULL-OUT. IMPACT DRILLS SHALL NOT BE USED TO DRILL MOUNTING HOLES. AVOID ALL BRIDGE STRUCTURAL REINFORCING WHEN DRILLING. ALL UNUSED HOLES SHALL BE FILLED WITH EPOXY GROUT.
2. 3/4" PVC COATED GRS, 2#10 RHW-USE, #10 GND.

20' 10' 0 20' 40' 80'

SCALE: 1"=20'

GRAPHIC SCALE

GARY I. FUNASAKI LICENSED PROFESSIONAL ENGINEER No. 4195-E HAWAII, U.S.A.

THIS WORK WAS PREPARED BY ME OR UNDER MY SUPERVISION.

6 NOV 1997

STATE OF HAWAII
DEPARTMENT OF TRANSPORTATION
HIGHWAYS DIVISION

UNDERPASS LIGHTING DEMO PLAN, UNDERPASS LIGHTING PLAN

INTERSTATE ROUTE H-1
Kunia Interchange Improvements
F.A.I. Project No IM-HI-1(219)

SCALE: AS NOTED DATE: OCT. 1997

SHEET No. E25 OF 43 SHEETS

ORIGINAL PLAN | SURVEY PLOTTED BY | DRAWN BY | TRACED BY | DESIGNED BY | QUANTITIES BY | CHECKED BY | DATE
REVISION | NOTE BOOK | No.

LAST SAVE: 10/17/97 & 14:06:06 BY: GR PLOT SC: 1:20
G:\HIAD\PROJECTS\R0680\PLAN\E25

FED. ROAD DIST. NO.	STATE	FED. AID PROJ. NO.	FISCAL YEAR	SHEET NO.	TOTAL SHEETS
HAWAII	HAW.	IM-H1-1(219)	1998	247	378

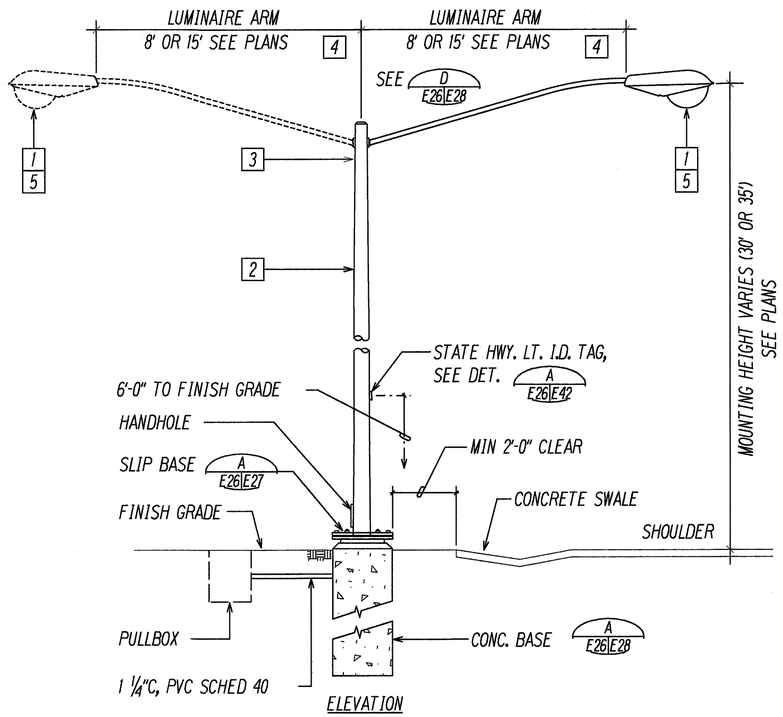

A STREET LIGHT STANDARD
E14|E26
NOT TO SCALE
E15,E16,E20,E21,E22

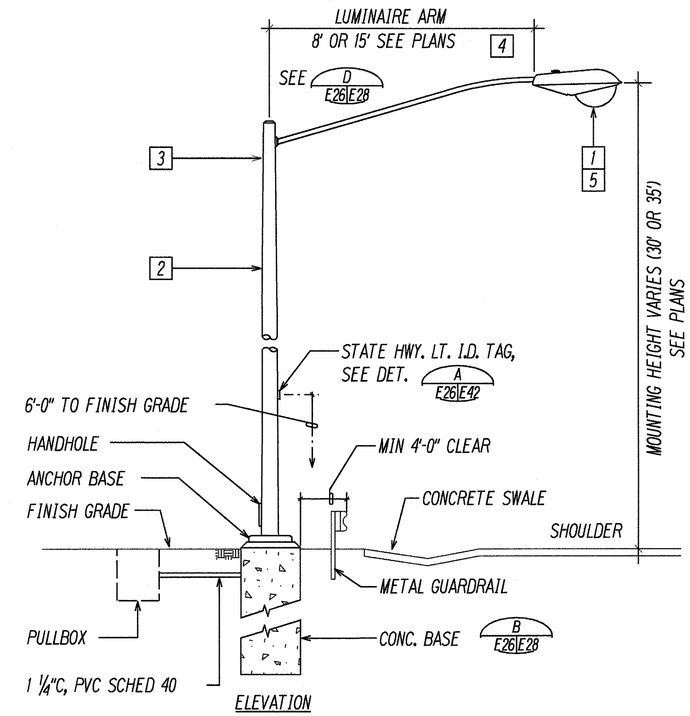

B STREET LIGHT STANDARD
E15|E26
NOT TO SCALE
E16,E17,E18,E22

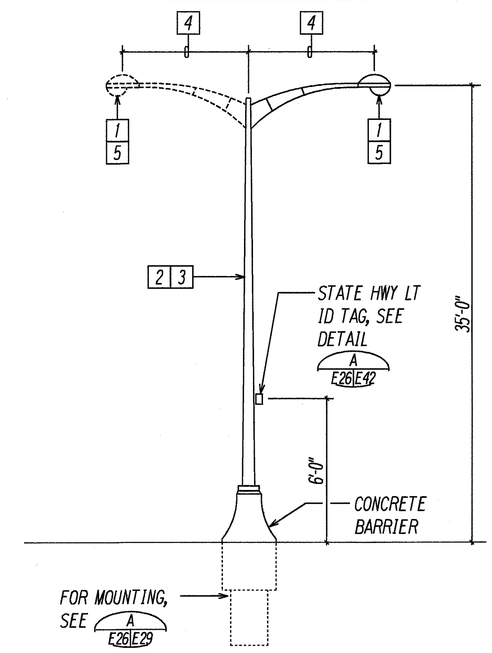

C STREET LIGHTING STANDARD DETAIL
E15|E26
NOT TO SCALE
E22,E23,E24

NOTES:

1. 250 WATT HPS LUMINAIRE, 240V OR 480V WATCON SOLID STATE BALLAST OR APPROVED EQUAL, BALLAST SHALL HAVE ±1% INPUT WATTAGE REGULATION, MED. SEMI-CUTOFF (M-S-III)
2. GALV. STEEL POLE: TO WITHSTAND 100 MPH WIND WITHOUT PERMANENT DEFORMATION.
3. POLE SHALL BE FREE OF WHITE RUST.
4. 8' TAPERED ELLIPTICAL LUMINAIRE ARM WITH A 3' NOMINAL ARM RISE. 15' TRUSS TYPE LUMINAIRE ARM WITH A 5' NOMINAL ARM RISE.
5. PROVIDE PHOTOCELL AT STREET LIGHT CONTROLLERS. SEE SHEET E34.

DATE	REVISION
2/05/98	REVISED DETAIL B AND NOTE NO. 4 PER ADDENDUM NO. 3.

GARY I. FUNASAKI
LICENSED PROFESSIONAL ENGINEER
No. 4195-E
HAWAII, U.S.A.

THIS WORK WAS PREPARED BY ME OR UNDER MY SUPERVISION.

STATE OF HAWAII
DEPARTMENT OF TRANSPORTATION
HIGHWAYS DIVISION

STREET LIGHT DETAILS

INTERSTATE ROUTE H-1
Kunia Interchange Improvements
F.A.I. Project No IM-H1-1(219)

SCALE: AS NOTED DATE: OCT. 1997

SHEET No. E26 OF 43 SHEETS

SURVEY PLOTTED BY	DATE
DRAWN BY	"
TRACED BY	"
DESIGNED BY	"
QUANTITIES BY	"
CHECKED BY	"

ORIGINAL PLAN
NOTE BOOK
No.

$TIME$ $USERNAME$ $DATE$

247R

FED. ROAD DIST. NO.	STATE	FED. AID PROJ. NO.	FISCAL YEAR	SHEET NO.	TOTAL SHEETS
HAWAII	HAW.	IM-HI-1(219)	1998	248	378

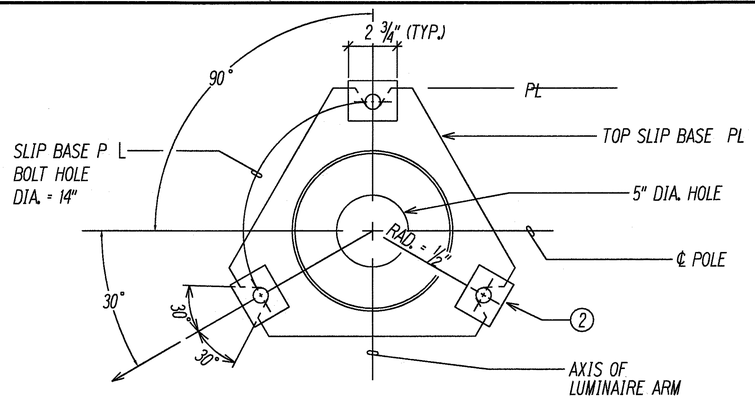

VIEW "C-C"

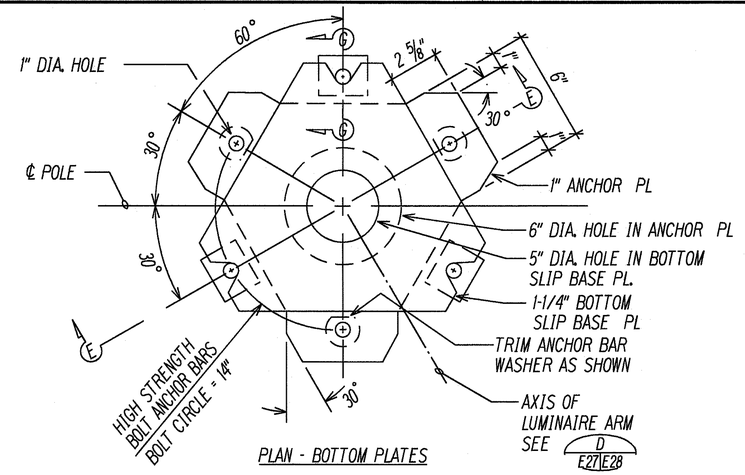

PLAN - BOTTOM PLATES

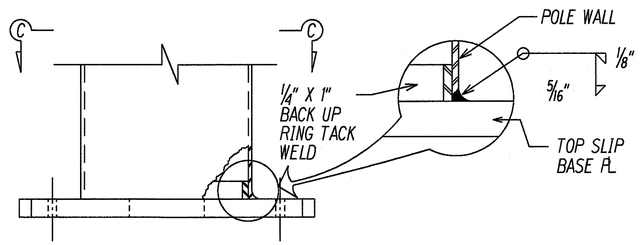

1" TOP SLIP BASE PLATE

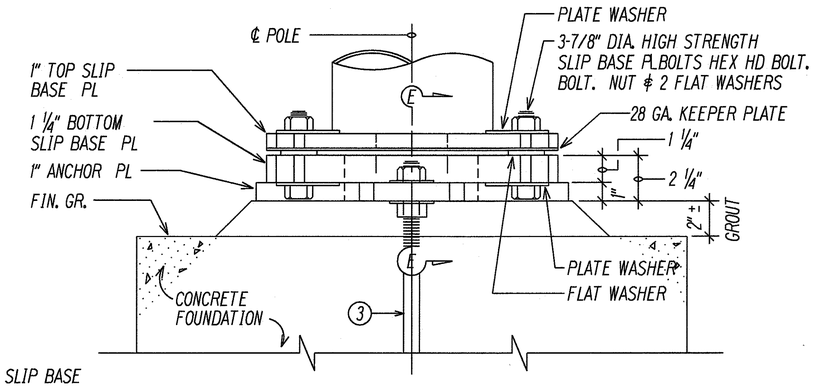

BOTTOM SLIP BASE PLATE

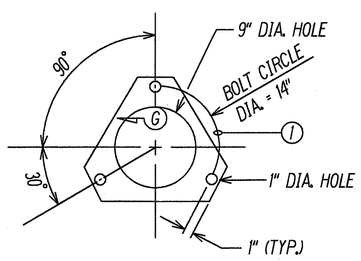

28 GA. KEEPER PLATE

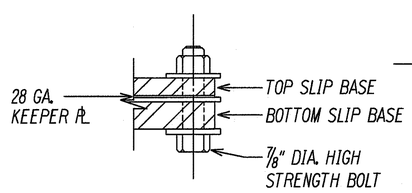

SECTION "G-G"

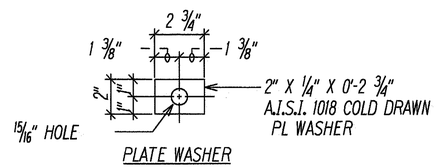

PLATE WASHER

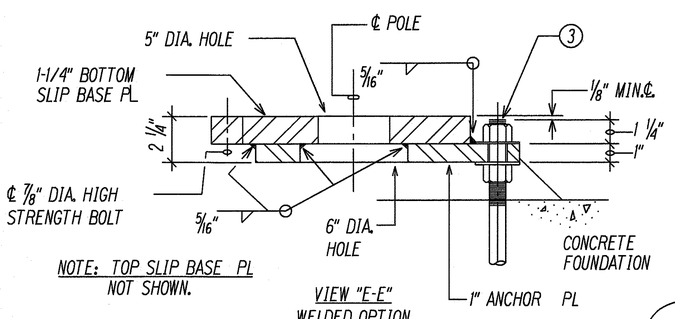

NOTE: TOP SLIP BASE PL
NOT SHOWN.

VIEW "E-E"
WELDED OPTION

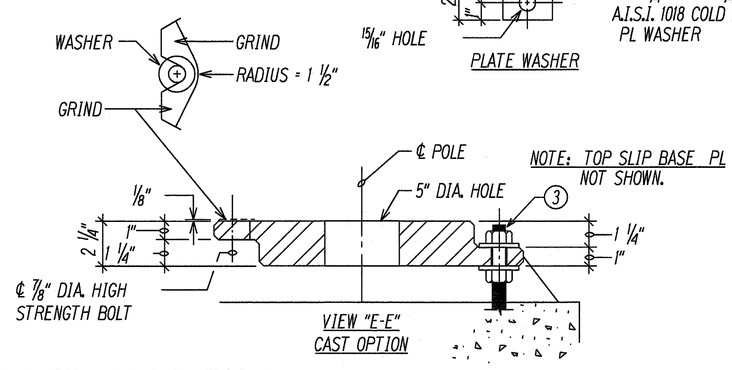

VIEW "E-E"
CAST OPTION

A
E28 E27
SLIP BASE DETAILS
N.T.S.

NOTES:

1. 28 GAUGE KEEPER PLATE, PLACE ON TOP OF MIDDLE FLAT WASHER, ASTM A-526 125 COMMERCIAL.
2. PLATE WASHER.
3. 3 - 7/8" DIAMETER HIGH STRENGTH BARS, THREAD 6" & GALVANIZED 10', WITH HEX., HEAD, NUT, LEVELING NUT & WASHER.

GENERAL NOTES:

1. ALL PLATES, BOLTS, SCREWS, NUTS & WASHERS TO BE HOT-DIPPED GALVANIZED AFTER FABRICATION OR MODIFICATION.
2. PLATES TO CONFORM TO ASTM A-36.
3. CAST OPTION TO CONFORM TO ASTM A-486 CL. 90.
4. TORQUE 7/8" DIAMETER HIGH STRENGTH SLIP BASE PLATE BOLTS TO 84 FEET PER POUND.
5. 7/8" DIAMETER H.S. ANCHOR BARS, WRENCH TIGHTEN - TORQUE REQUIREMENT WAIVED.
6. FABRICATORS ELECTING LARGER THAN MINIMUM ARM DIAMETERS MUST ADJUST DETAILS AS REQUIRED TO PERMIT SOLID SEATING OF CAP SCREWS. IN LIEU OF TORQUE REQUIREMENTS FOR HIGH STRENGTH BOLTS, CAP SCREWS SHALL BE TIGHTENED BY THE TURN OF NUT METHOD 1/6 TURN FROM SNUG CONDITION. NO WASHER WILL BE REQUIRED.
7. 4" X 6 1/2" HANDHOLE REINFORCED WITH #3 GAUGE RING 1/2" WIDE WELDED TO OUTSIDE OF POLE COVER OF 10 GAUGE PLATE LOCATE 180 DEGREES OF MAST ARM UNLESS SHOWN OTHERWISE.
8. HEX. HEAD NUT SHOWN OR AS AN ALTERNATE DETAIL ANCHOR PLATES MAY BE RETAINED WITH 5/16" FILLET WELDS ALL AROUND OR FORMED HEADS.
9. MINIMUM THICKNESS OF STEEL TO BE PER MANUFACTURER'S DESIGN BASED ON POLE AND ARM WITHSTANDING AASHTO 100 MPH WIND.
10. MANUFACTURER'S FABRICATION DRAWINGS TO BE STAMPED AND SIGNED BY LICENSED PROFESSIONAL ENGINEER.

ORIGINAL PLAN	NOTE BOOK	No.	DATE
SURVEY PLOTTED BY			
DRAWN BY			
TRACED BY			
DESIGNED BY			
QUANTITIES BY			
CHECKED BY			

LAST SAVED: 10/07/97 @ 10:53:27 BY OR PLOT SC: 1=1
DIR:E:\DOT\PROJECTS\96080\TEXT\E27

GARY I. FUNASAKI
LICENSED PROFESSIONAL ENGINEER
No. 4195-E
HAWAII, U.S.A.

THIS WORK WAS PREPARED BY ME OR UNDER MY SUPERVISION.
6 NOV 1997

STATE OF HAWAII
DEPARTMENT OF TRANSPORTATION
HIGHWAYS DIVISION

STREET LIGHT SLIP BASE DETAIL

INTERSTATE ROUTE H-1
Kunia Interchange Improvements
F.A.I. Project No IM-HI-1(219)

SCALE: AS NOTED DATE: OCT. 1997

SHEET No. E27 OF 43 SHEETS

FED. ROAD DIST. NO.	STATE	FED. AID PROJ. NO.	FISCAL YEAR	SHEET NO.	TOTAL SHEETS
HAWAII	HAW.	IM-H1-1(219)	1998	249	378

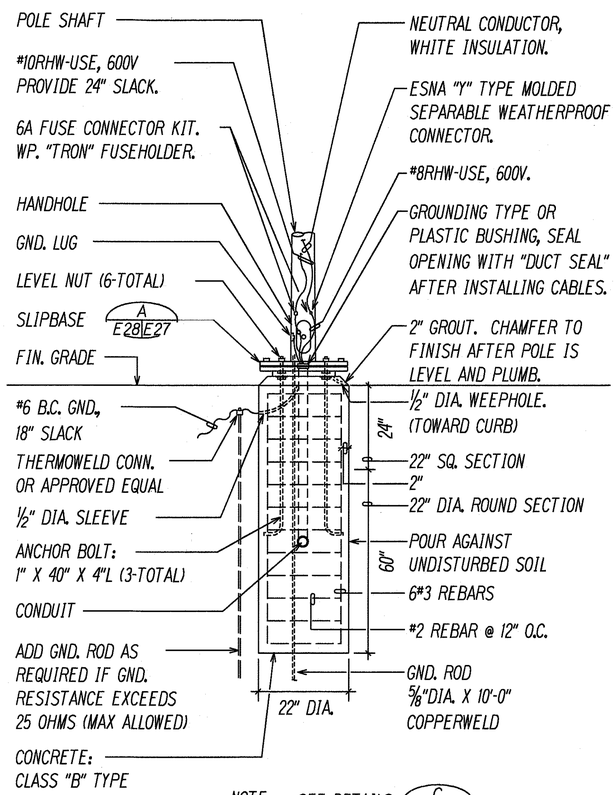

NOTE: SEE DETAILS C E28 E28

A E26 E28 CONCRETE SLIP BASE ELEVATION
NOT TO SCALE

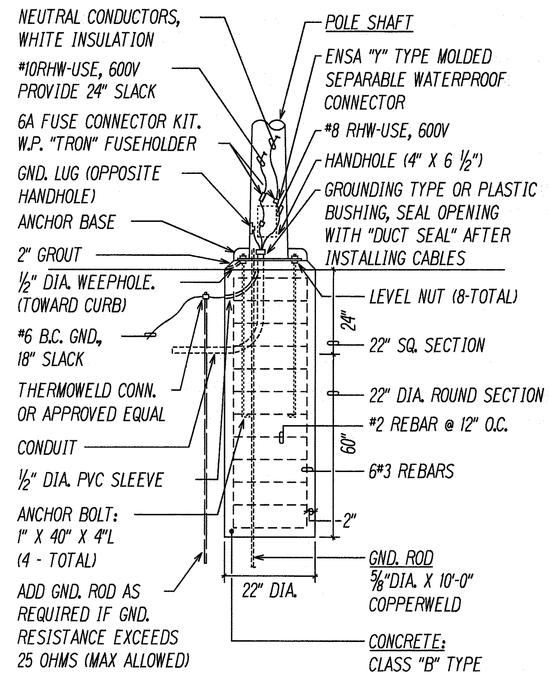

NOTE: SEE DETAILS C E28 E28

B E26 E28 CONCRETE ANCHOR BASE ELEVATION
NOT TO SCALE

GENERAL STREET LIGHT NOTES:

1. CONTRACTOR SHALL OBTAIN SHOP DRAWING APPROVAL PRIOR TO ORDERING STREET LIGHTS.
2. ALL STREET LIGHT POLES, ARMS AND HARDWARE SHALL BE HOT-DIPPED GALVANIZED. POLES, ARMS AND HARDWARE SHALL BE FREE OF WHITE RUST.
3. ALL STREET LIGHT BASES SHALL BE POURED IN PLACE.
4. TOP OF POLE DEFLECTION WITH ARM AND LUMINAIRE SHALL BE MAXIMUM 4 DEGREES FROM VERTICAL (SEE BELOW)

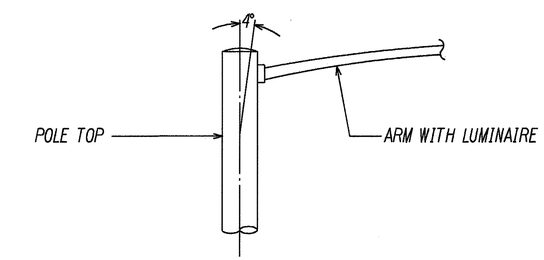

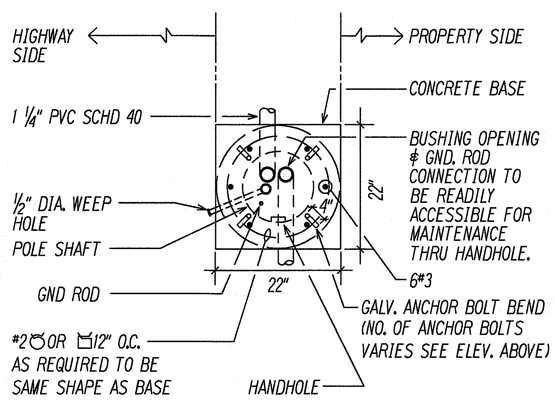

C E28 E28 CONCRETE BASE PLAN
NOT TO SCALE

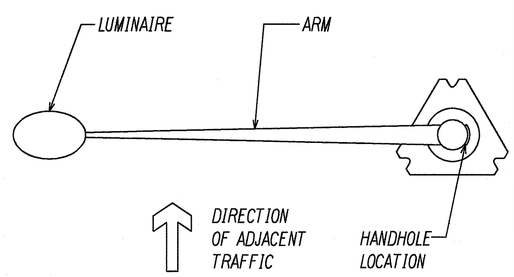

D E26 E28 E27 SLIP BASE-ARM ORIENTATION DETAIL

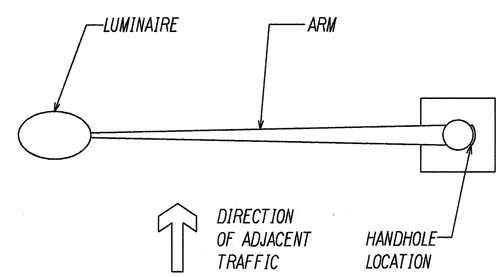

E E26 E28 ANCHOR BASE-ARM ORIENTATION DETAIL

ORIGINAL PLAN	SURVEY PLOTTED BY	DATE
	DRAWN BY	
NOTE BOOK	TRACED BY	
	DESIGNED BY	
	QUANTITIES BY	
Vol.	CHECKED BY	

LAST SHEET: E-27 SP & MARKS BY: GR PLOT SC: 1"=1"
G:\ACD\PROJECTS-2000\IM-H1-219

GARY I. FUNASAKI LICENSED PROFESSIONAL ENGINEER No. 4195-E HAWAII, U.S.A.

THIS WORK WAS PREPARED BY ME OR UNDER MY SUPERVISION.
6 NOV 1997

STATE OF HAWAII
DEPARTMENT OF TRANSPORTATION
HIGHWAYS DIVISION

CONCRETE BASE AND STREET LIGHT DETAILS

INTERSTATE ROUTE H-1
Kunia Interchange Improvements
F.A.I. Project No IM-H1-1(219)

SCALE: AS NOTED DATE: OCT. 1997

SHEET No. E28 OF E43 SHEETS

FED. ROAD DIST. NO.	STATE	FED. AID PROJ. NO.	FISCAL YEAR	SHEET NO.	TOTAL SHEETS
HAWAII	HAW.	IM-H1-1(219)	1998	C.O.249 S-1	378

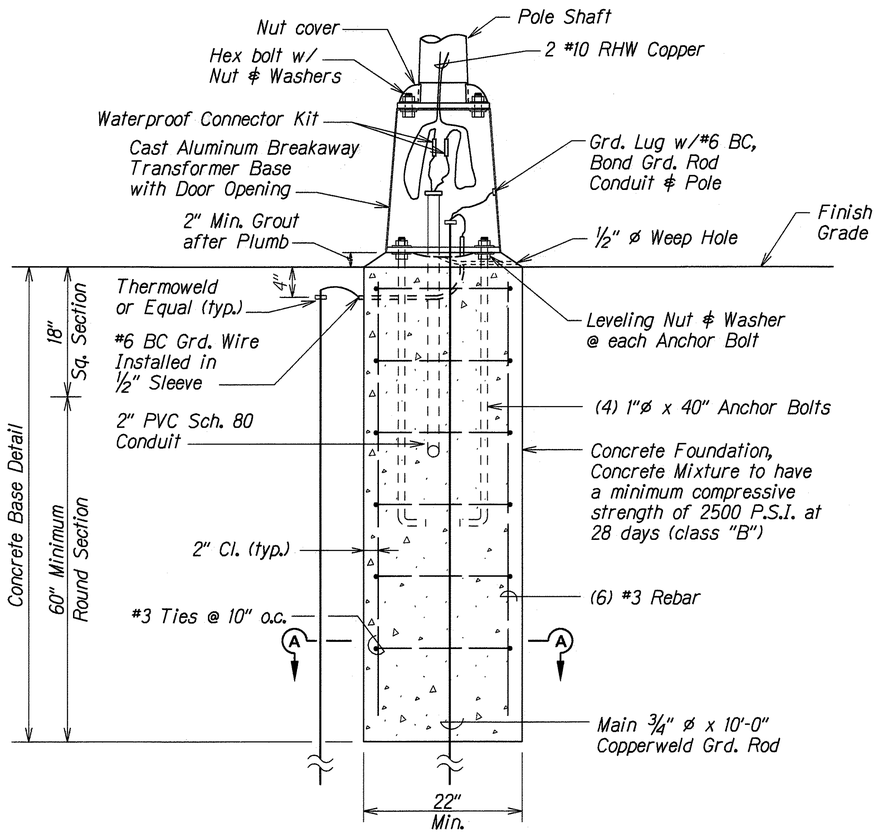

ELEVATION

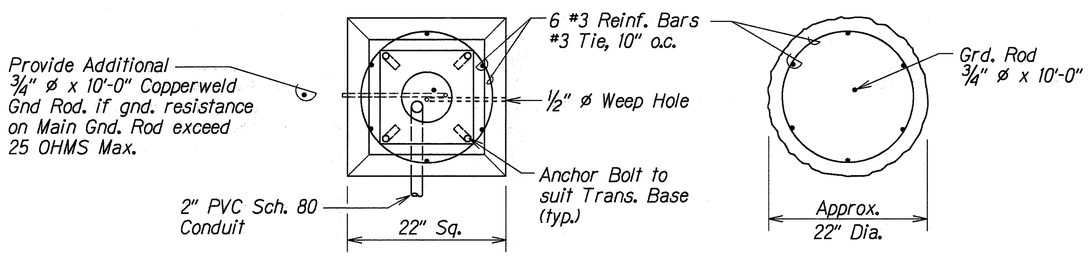

PLAN

SECTION A-A

TYPICAL CONCRETE FOUNDATION AND TRANSFORMER BASE DETAIL

Not to Scale

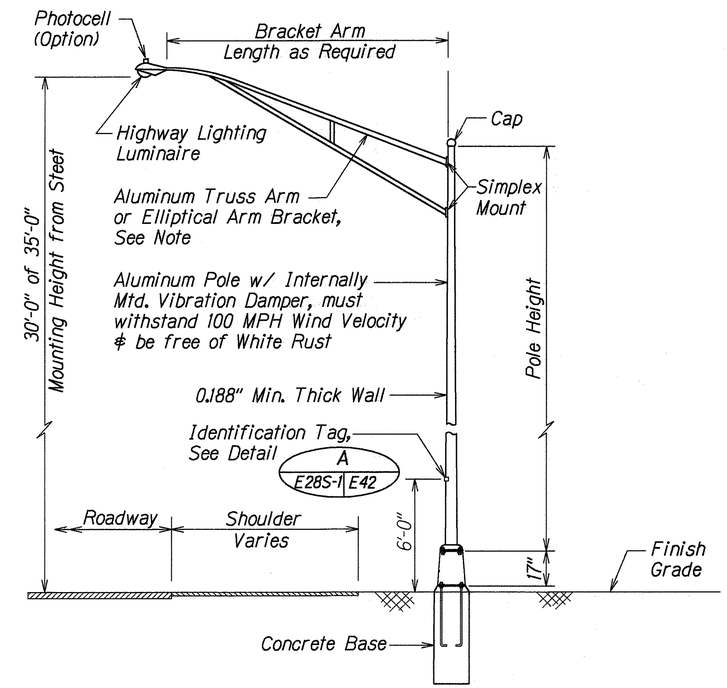

NOTE:

For 4' to 10' Arm, Use Elliptical Bracket Arm
For 10' to 15' arm, Use Truss Bracket Arm

TYPICAL LIGHT STANDARD INSTALLATION WITH TRANSFORMER BASE

Not to Scale

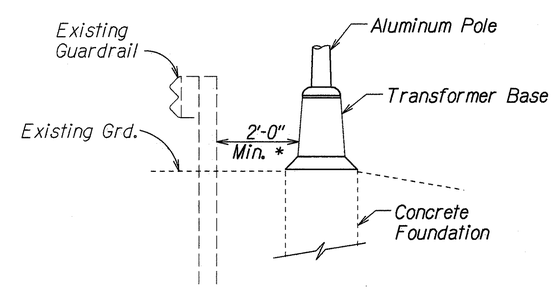

* - If 2'-0" min. can not be maintained due to conflict with other utilities, coordinate field adjustments with Engineer.

HIGHWAY LIGHTING DETAIL

Not to Scale

DATE	REVISION
6/28/99	Sheet Added to Contract Plan Set for Aluminum Breakaway Transformer Base Details Required for Aluminum Pole Installation.

STATE OF HAWAII
DEPARTMENT OF TRANSPORTATION
HIGHWAYS DIVISION

TRANSFORMER BASE DETAILS

INTERSTATE ROUTE H-1

Kunia Interchange Improvements

F. A. I. Project No. IM-H1-1(219)

Scale: As Noted — Date: June, 1999

SHEET No. E28S-1 OF E43 SHEETS

C.O.249S-1

ORIGINAL PLAN — SURVEY PLOTTED BY — PLANS PREPARED BY Z. Adli — DESIGNED BY G. Kakehi — QUANTITIES BY — CHECKED BY — DATE 6/28/99 — NOTE BOOK No. — dlittle

FED. ROAD DIST. NO.	STATE	FED. AID PROJ. NO.	FISCAL YEAR	SHEET NO.	TOTAL SHEETS
HAWAII	HAW.	IM-HI-1(219)	1998	250	378

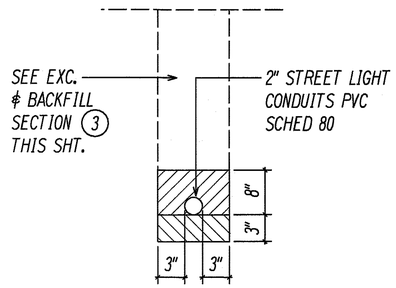

DUCT SECTION J E15 E29 E22,E18,E16

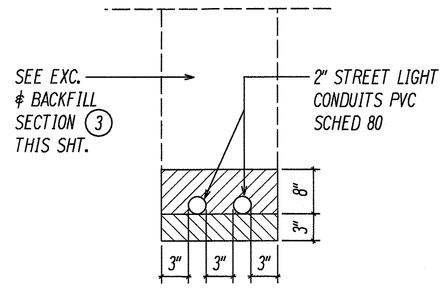

DUCT SECTION K E21 E29 E22

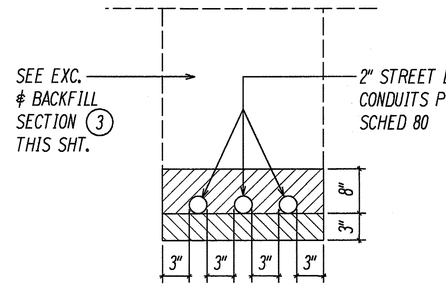

DUCT SECTION L E21 E29

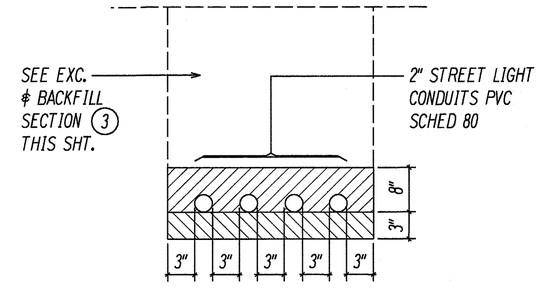

DUCT SECTION M E22 E29

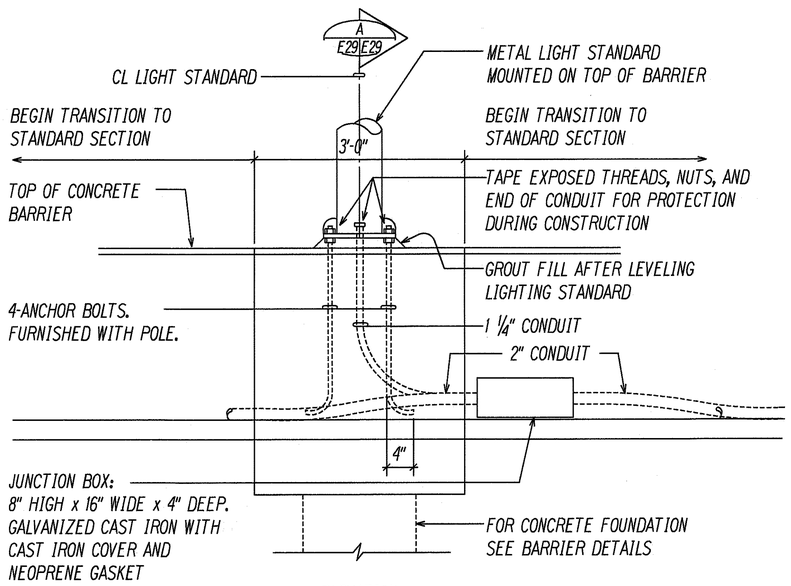

ELEVATION

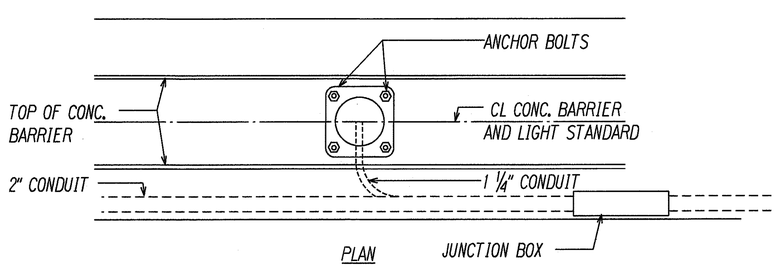

PLAN

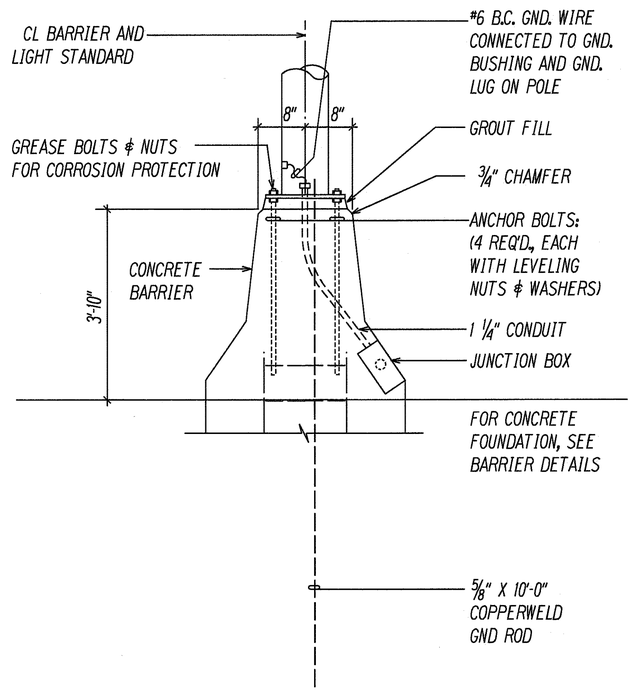

A E29 E29 SECTION FOR ST. LTG. STD.

B E29 E29 HIGHWAY LIGHTING STANDARD MOUNTING DETAILS ON CONCRETE BARRIER

N.T.S.

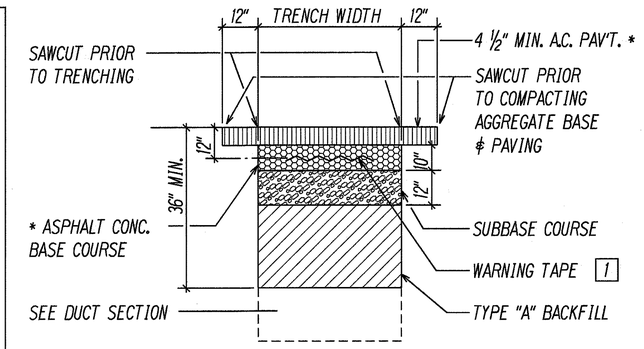

* A.C. AND BASE COURSE TO MATCH EXISTING THICKNESS OR THE MINIMUM THICKNESS SHOWN, WHICHEVER IS GREATER.

3 EXCAVATION AND BACKFILL SECTION

WITHIN STATE RIGHT-OF-WAY UNDER EXISTING ROADWAY & PAVED SHOULDER

NOTE: SEE SHEET E32 FOR BACKFILL NOTES.

NOTE(S):

1 CONTRACTOR SHALL PLACE 8-MIL ORANGE COLORED PLASTIC WARNING TAPE, NOT LESS THAN 4" WIDE IN ENTIRE LENGTH OF TRENCH FOR ALL UNDERGROUND INSTALLATIONS.

GARY I. FUNASAKI LICENSED PROFESSIONAL ENGINEER No. 4195-E HAWAII, U.S.A.

THIS WORK WAS PREPARED BY ME OR UNDER MY SUPERVISION.

6 NOV 1997

STATE OF HAWAII
DEPARTMENT OF TRANSPORTATION
HIGHWAYS DIVISION

HIGHWAY LIGHTING DETAILS, DUCT SECTIONS

INTERSTATE ROUTE H-1
Kunia Interchange Improvements
F.A.I. Project No. IM-HI-1(219)

SCALE: AS NOTED DATE: OCT. 1997

SHEET No. E29 OF 43 SHEETS

ORIGINAL PLAN | SURVEY PLOTTED BY | DRAWN BY | TRACED BY | DESIGNED BY | QUANTITIES BY | CHECKED BY | DATE
NOTE BOOK No.

LAST SAVED: 10/27/97 ● HASS: Dr. Gh TUE SC 1-PM
G:\ACAD\PROJECTS\98098\H1\H-E29

FED. ROAD DIST. NO.	STATE	FED. AID PROJ. NO.	FISCAL YEAR	SHEET NO.	TOTAL SHEETS
HAWAII	HAW.	IM-HI-1(219)	1998	251	378

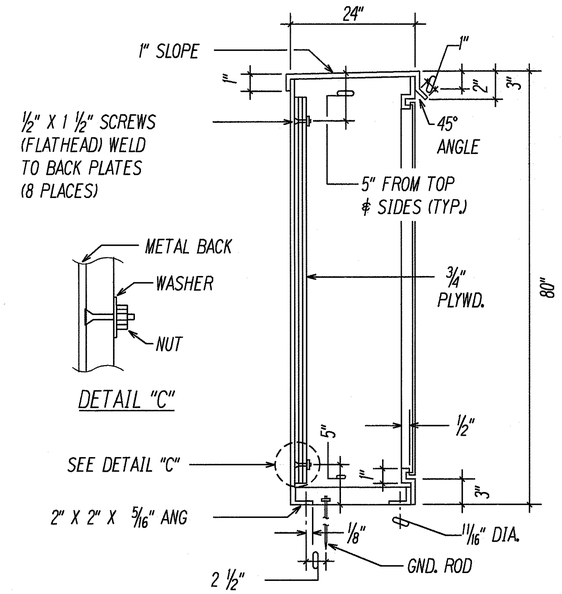

SECTION "A"

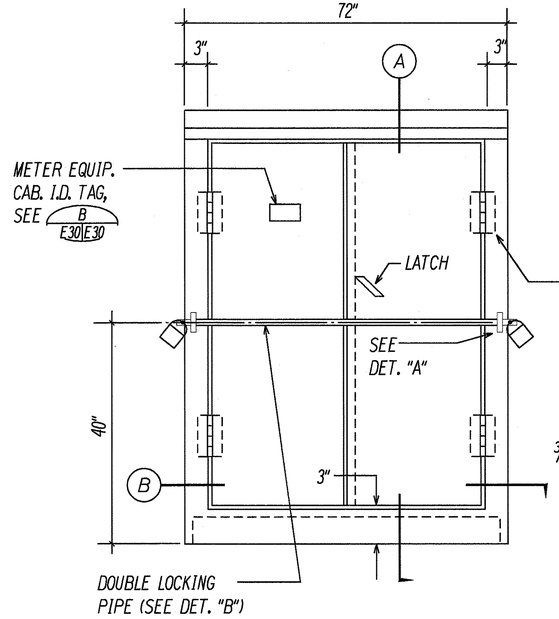

ELEVATION

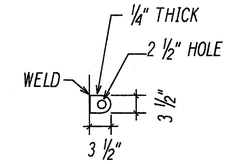

DETAIL "A"
SIDE VIEW

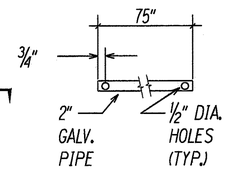

DETAIL "B"

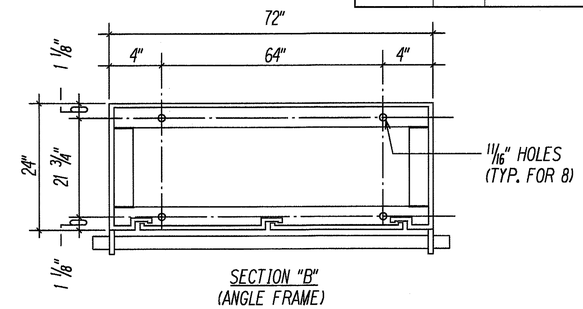

SECTION "B"
(ANGLE FRAME)

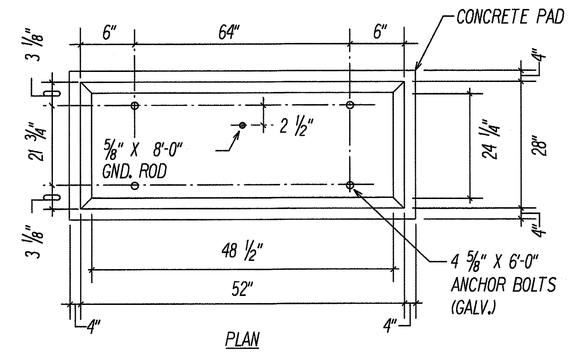

PLAN

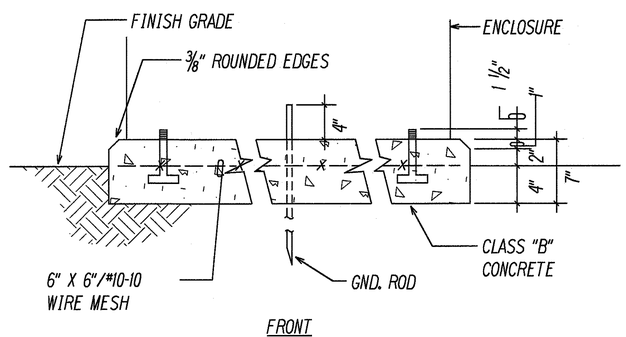

FRONT

CONCRETE PAD

NOTES:

1. CABINET TO BE PRIMED WITH ONE COAT SHOP PRIMER.
2. MADE FROM 10 GAUGE STAINLESS STEEL.
3. PROVIDE EPOXY ENAMEL FINISH, COLOR SHALL BE MUNSELL 7GY3.29/1.5 GREEN. THE MUNSELL COLOR NOTATION IS SPECIFIED IN ASTM D 1535.
4. ENCLOSURE SHALL BE NEMA 3R WITH NEOPRENE GASKETING.
5. PADLOCKS:
   1 - HECO FURNISHED
   1 - CONTRACTOR FURNISHED
6. SHOP FABRICATION DRAWINGS SHALL BE SUBMITTED FOR APPROVAL.
7. ADD ADDITIONAL GND ROD AS REQUIRED IF GND RESISTANCE EXCEEDS 25 OHMS (MAX ALLOWED).

A E34 E30 COMBINATION METER AND EQUIPMENT CABINET N.T.S.

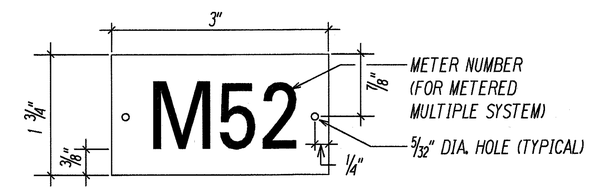

NOTES:

1. USE 2 PLY PLASTIC - BLACK, WHITE. THICKNESS: BLACK CAP SHEET - 0.010"; WHITE BASE SHEET - 0.052".
2. NUMBER SIZE SHALL BE 1" HIGH AND ENGRAVED 1/8" WIDE, WHITE IN COLOR (NUMBER AS REQUIRED).
3. ATTACH TO METER ENCLOSURE WITH NO. 8 STAINLESS STEEL DRIVE SCREWS.
4. NUMBERS ARE INSCRIBED BY CUTTING THROUGH "BLACK CAP SHEET" TO EXPOSE "WHITE LETTERS".

B E30 E30 E31 METER EQUIPMENT CABINET I.D. TAG N.T.S.

SURVEY PLOTTED BY
DRAWN BY
TRACED BY
REVIEWED BY
QUANTITIES BY
CHECKED BY
DATE
ORIGINAL PLAN
NOTE BOOK
No.

LAST SAVE: 9/07/97 ● 10:57:37 BY: GH PLOT SC 1=24"
G:\ACAD\PROJECTS\9899\FIG\E30

GARY I. FUNASAKI
LICENSED PROFESSIONAL ENGINEER
No. 4195-E
HAWAII, U.S.A.

THIS WORK WAS PREPARED BY ME OR UNDER MY SUPERVISION.
6 NOV 1999

STATE OF HAWAII
DEPARTMENT OF TRANSPORTATION
HIGHWAYS DIVISION

METER AND EQUIPMENT ENCLOSURE DETAILS

INTERSTATE ROUTE H-1
Kunia Interchange Improvements
F.A.I. Project No IM-HI-1(219)

SCALE: AS NOTED DATE: OCT. 1997

SHEET No. E30 OF 43 SHEETS

FED. ROAD DIST. NO.	STATE	FED. AID PROJ. NO.	FISCAL YEAR	SHEET NO.	TOTAL SHEETS
HAWAII	HAW.	IM-HI-1(219)	1998	252	378

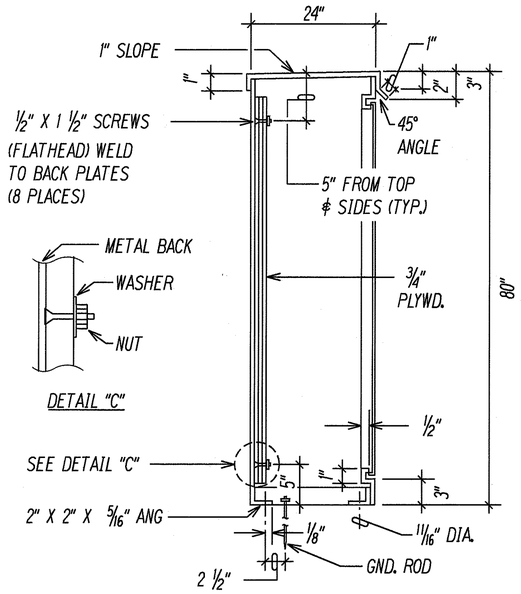

DETAIL "C"

SECTION "A"

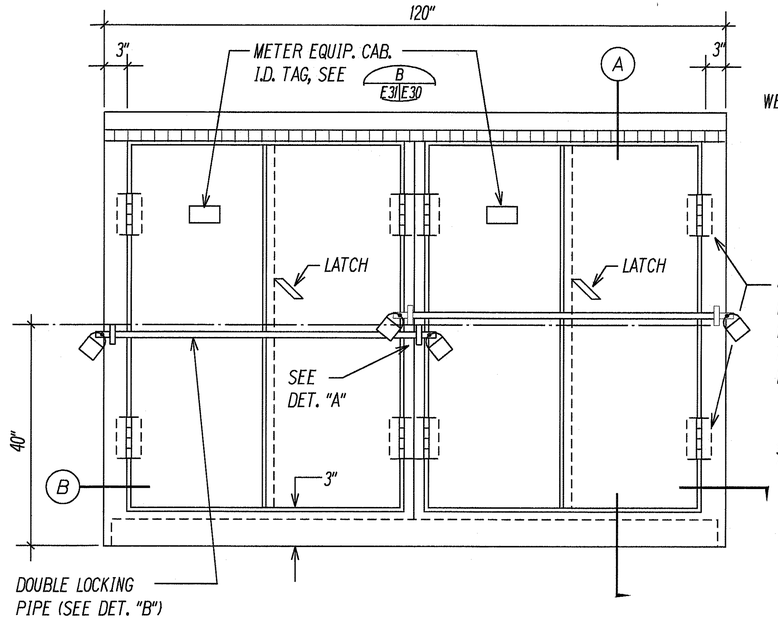

ELEVATION

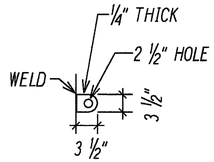

DETAIL "A"
SIDE VIEW

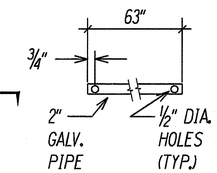

DETAIL "B"

NOTES:

1. CABINET TO BE PRIMED WITH ONE COAT SHOP PRIMER.
2. MADE FROM 10 GAUGE STAINLESS STEEL.
3. PROVIDE EPOXY ENAMEL FINISH, COLOR SHALL BE MUNSELL 7GY3.29/1.5 GREEN. THE MUNSELL COLOR NOTATION IS SPECIFIED IN ASTM D 1535.
4. ENCLOSURE SHALL BE NEMA 3R WITH NEOPRENE GASKETING.
5. PADLOCKS:
   2 - HECO FURNISHED
   2 - CONTRACTOR FURNISHED
6. SHOP FABRICATION DRAWINGS SHALL BE SUBMITTED FOR APPROVAL.
7. ADD ADDITIONAL GND ROD AS REQUIRED IF GND RESISTANCE EXCEEDS 25 OHMS (MAX ALLOWED).

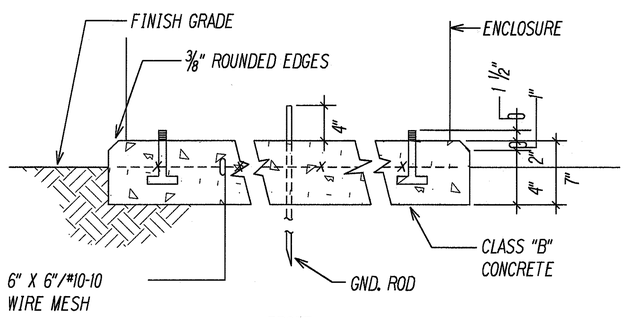

FRONT

CONCRETE PAD

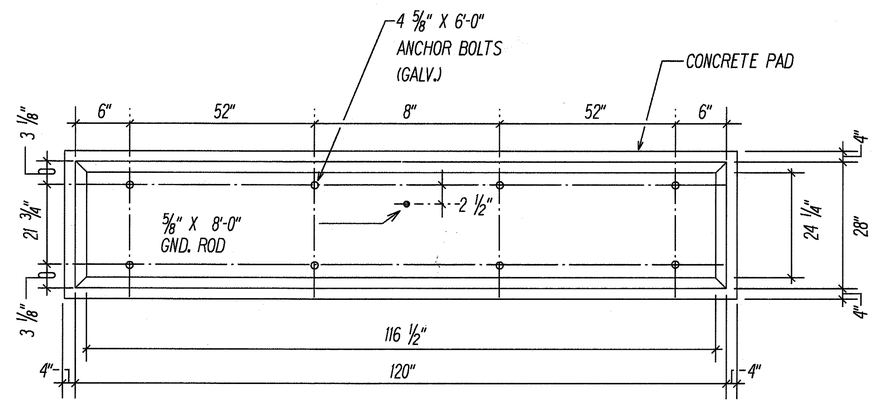

PLAN

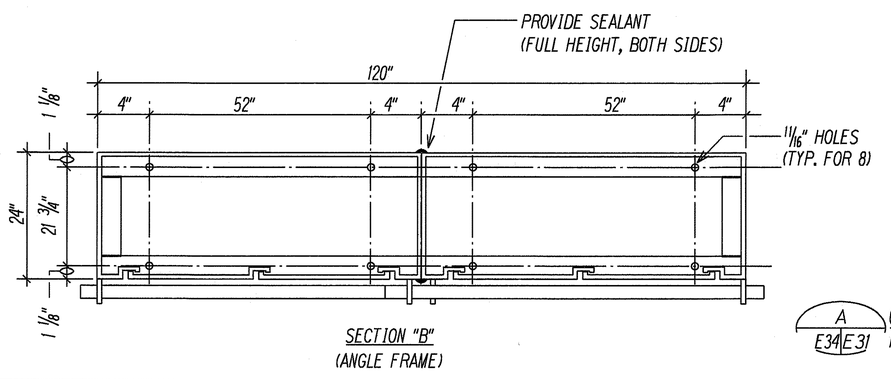

SECTION "B"
(ANGLE FRAME)

A
E34 E31
COMBINATION METER AND EQUIPMENT CABINET
N.T.S.

SURVEY PLOTTED BY	
DRAWN BY	
TRACED BY	
DESIGNED BY	
QUANTITIES BY	
CHECKED BY	
DATE	
ORIGINAL PLAN	
NOTE BOOK	
No.	

LAST SAVE: 10/17/97 • NISHIJI BY: GR PLOT SC: 1=1•1
G:\ACAD\PROJECTS\9899\9899E31

GARY I. FUNASAKI
LICENSED PROFESSIONAL ENGINEER
No. 4195-E
HAWAII, U.S.A.

THIS WORK WAS PREPARED BY ME OR UNDER MY SUPERVISION.
6 Nov 1997

STATE OF HAWAII
DEPARTMENT OF TRANSPORTATION
HIGHWAYS DIVISION

METER AND EQUIPMENT ENCLOSURE DETAILS

INTERSTATE ROUTE H-1
Kunia Interchange Improvements
F.A.I. Project No IM-HI-1(219)

SCALE: AS NOTED DATE: OCT. 1997

SHEET No. E31 OF 43 SHEETS

FED. ROAD DIST. NO.	STATE	FED. AID PROJ. NO.	FISCAL YEAR	SHEET NO.	TOTAL SHEETS
HAWAII	HAW.	IM-H1-1(219)	1998	253	378

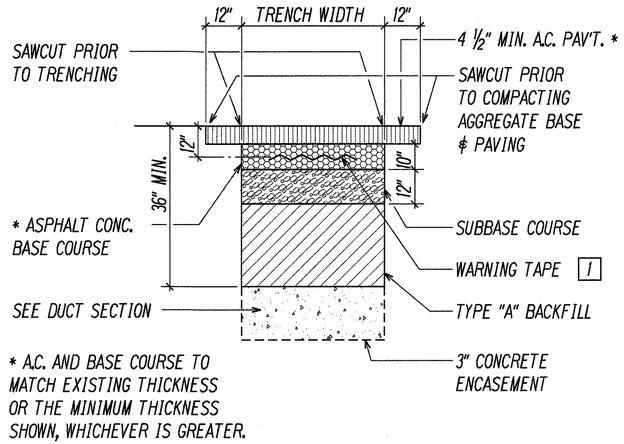

1 EXCAVATION AND BACKFILL SECTION

WITHIN STATE RIGHT-OF-WAY UNDER EXISTING ROADWAY & PAVED SHOULDER

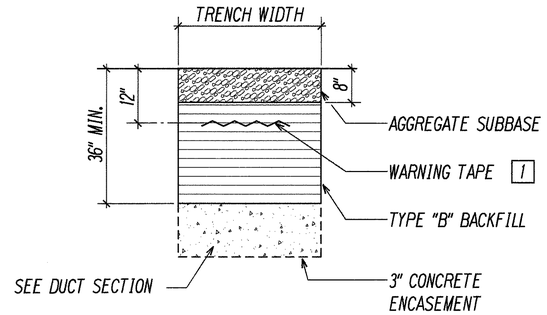

2 EXCAVATION AND BACKFILL SECTION

WITHIN STATE RIGHT-OF-WAY UNDER UNPAVED SHOULDER

STATE RIGHT-OF-WAY BACKFILL NOTES

N.T.S.

TRENCH BACKFILL MATERIAL "B"
1. SAND EQUIVALENT ≥ 2
2. 8" MAX. LIFT LOOSE
3. 95% COMPACTION

TRENCH BACKFILL MATERIAL "A"
1. SAND EQUIVALENT ≥ 20
2. 8" MAX. LIFT LOOSE
3. 95% COMPACTION

IF MATERIAL BELOW DUCT IS NOT EQUIVALENT TO BACKFILL MATERIAL "A", EXCAVATE MATERIAL & PROVIDE 3" BACKFILL MATERIAL "A". SEE ABOVE

CONCRETE - 3" ENCASEMENT, 2500 PSI COMPRESSIVE STRENGTH @ 28 DAYS.

NOTE: BASE COURSE & SUB-BASE COURSE PER 1994 STATE STANDARD SPECIFICATIONS FOR HIGHWAY CONSTRUCTION.

NOTE(S):

1 CONTRACTOR SHALL PLACE 8-MIL ORANGE COLORED PLASTIC WARNING TAPE, NOT LESS THAN 4" WIDE IN ENTIRE LENGTH OF TRENCH FOR ALL UNDERGROUND INSTALLATIONS.

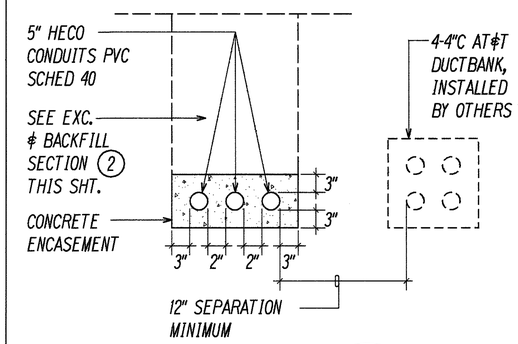

DUCT SECTION N E17 E32 E22

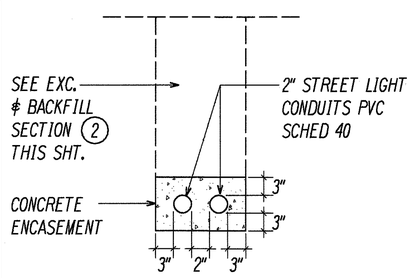

DUCT SECTION A E16 E32 E22,E21,E20

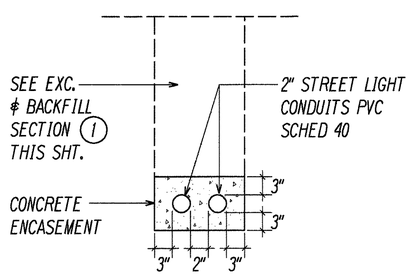

DUCT SECTION C E32

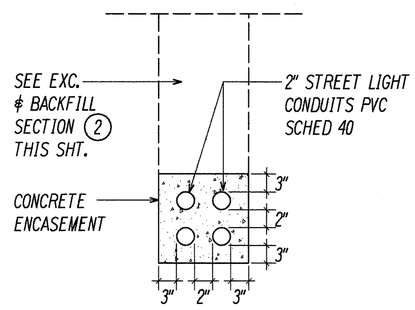

DUCT SECTION E E14 E32 E22,E21,E20,E15

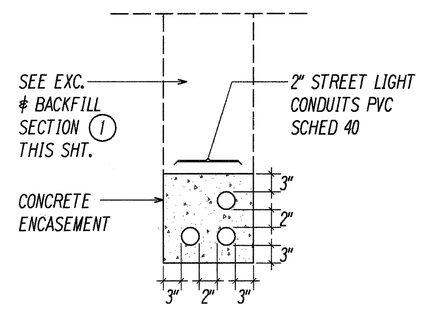

DUCT SECTION G E14 E32

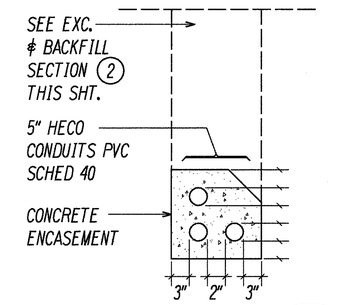

DUCT SECTION O E17 E32 E22

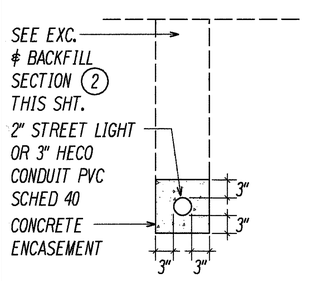

DUCT SECTION B E15 E32 E22,E21,E18,E17,E16

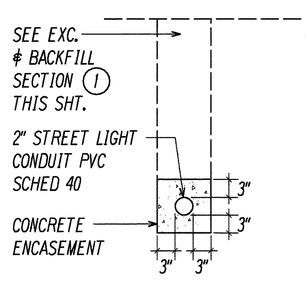

DUCT SECTION D E18 E32 E22,E21

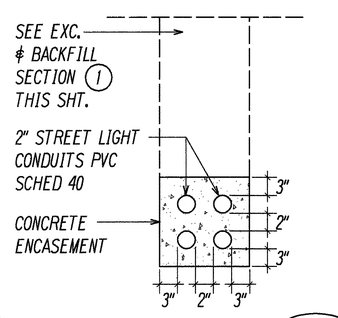

DUCT SECTION F E32

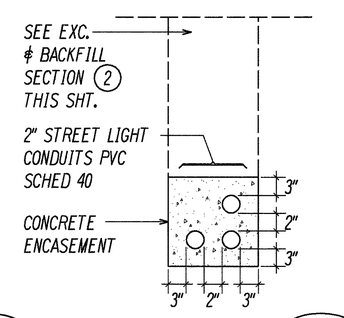

DUCT SECTION H E21 E32 E22

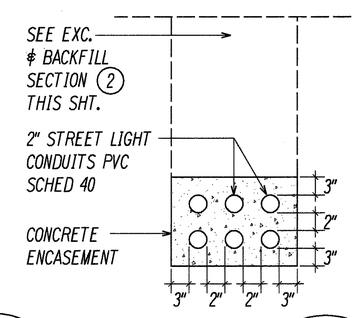

DUCT SECTION I E21 E32 E22

DATE	REVISION
4/9/99	ADDED DUCT SECTION "N" & "O" DETAIL

STATE OF HAWAII
DEPARTMENT OF TRANSPORTATION
HIGHWAYS DIVISION

DUCT SECTIONS

INTERSTATE ROUTE H-1
Kunia Interchange Improvements
F.A.I. Project No IM-H1-1(219)

GARY I. FUNASAKI LICENSED PROFESSIONAL ENGINEER No. 4196-E HAWAII, U.S.A.

THIS WORK WAS PREPARED BY ME OR UNDER MY SUPERVISION.

SCALE: AS NOTED DATE: OCT. 1997

SHEET No. E32 OF 43 SHEETS

C.O. 253

SURVEY PLOTTED BY
DRAWN BY
TRACED BY
DESIGNED BY
QUANTITIES BY
CHECKED BY
DATE

ORIGINAL PLAN
NOTE BOOK
No.

LAST SAVE: 04/09/99 ■ 03:03 BY: TW PLOT SC: 1=24"
DATES 11 1/8 5 10/98 11/15

FED. ROAD DIST. NO.	STATE	FED. AID PROJ. NO.	FISCAL YEAR	SHEET NO.	TOTAL SHEETS
HAWAII	HAW.	IM-H1-1(219)	1998	254	378

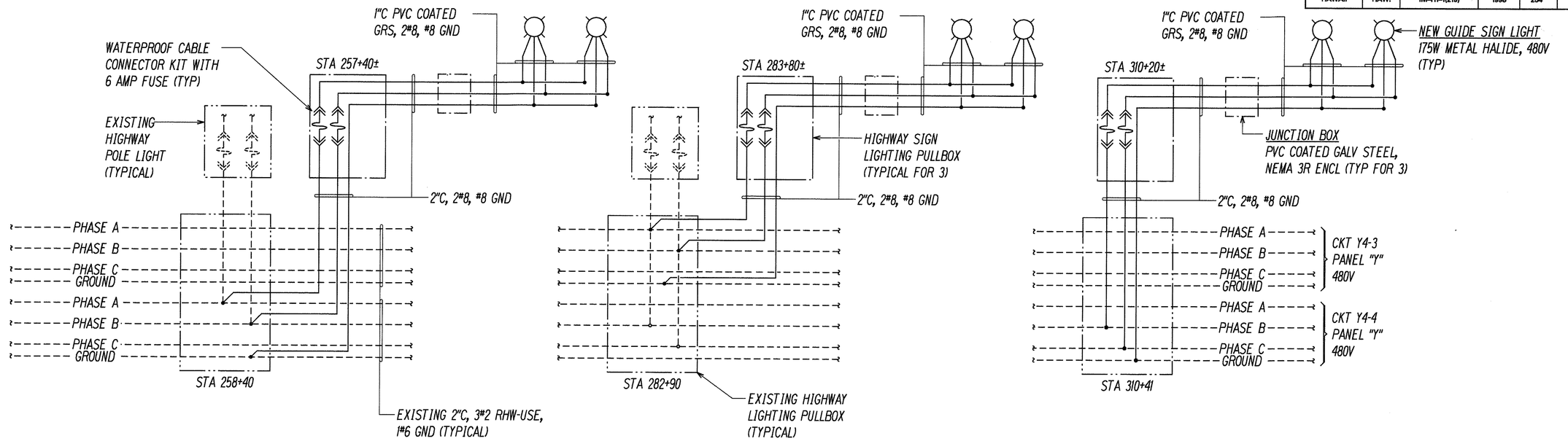

A E14 E33 E15

HIGHWAY SIGN LIGHTING WIRING DIAGRAM I

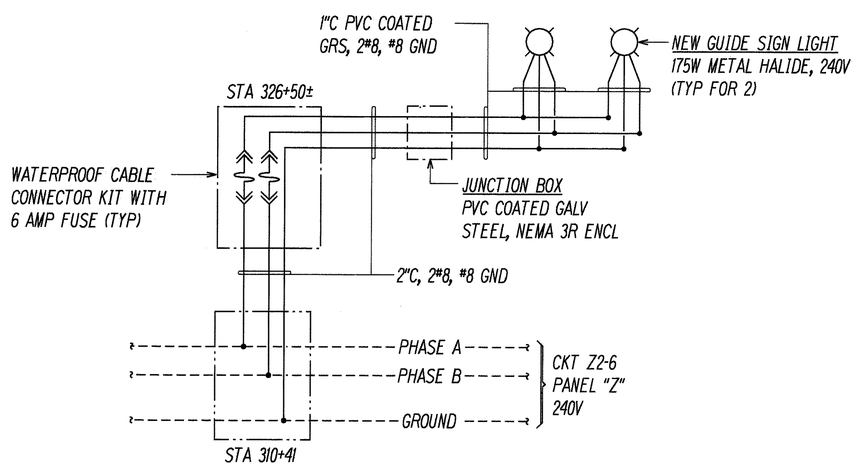

B E17 E33

HIGHWAY SIGN LIGHTING WIRING DIAGRAM II

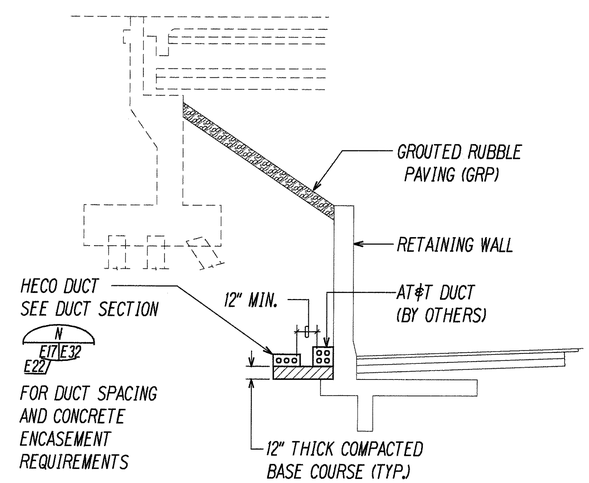

C E17 E33

TYPICAL DUCT SECTION BEHIND RETAINING WALL

NOT TO SCALE

DATE	REVISION
4/9/99	ADDED TYPICAL DUCT SECTION BEHIND RETAINING WALL DETAIL

GARY I. FUNASAKI
LICENSED PROFESSIONAL ENGINEER
No. 4196-E
HAWAII, U.S.A.

THIS WORK WAS PREPARED BY ME OR UNDER MY SUPERVISION.

STATE OF HAWAII
DEPARTMENT OF TRANSPORTATION
HIGHWAYS DIVISION

SIGN WIRING DIAGRAM

INTERSTATE ROUTE H-1
Kunia Interchange Improvements
F.A.I. Project No IM-HI-1(219)

SCALE: AS NOTED DATE: OCT. 1997

SHEET No. E33 OF 43 SHEETS

C.O. 254

ORIGINAL PLAN	SURVEY PLOTTED BY	DATE
	DRAWN BY	
	TRACED BY	
NOTE BOOK	DESIGNED BY	
	QUANTITIES BY	
No.	CHECKED BY	

LAST SHEET: 04/08/99 # FUNASAKI PE TM PLOT SC: 1/24"
DATES 9/1/98 9/30/98 FILES

FED. ROAD DIST. NO.	STATE	FED. AID PROJ. NO.	FISCAL YEAR	SHEET NO.	TOTAL SHEETS
HAWAII	HAW.	IM-HI-1(219)	1998	255	378

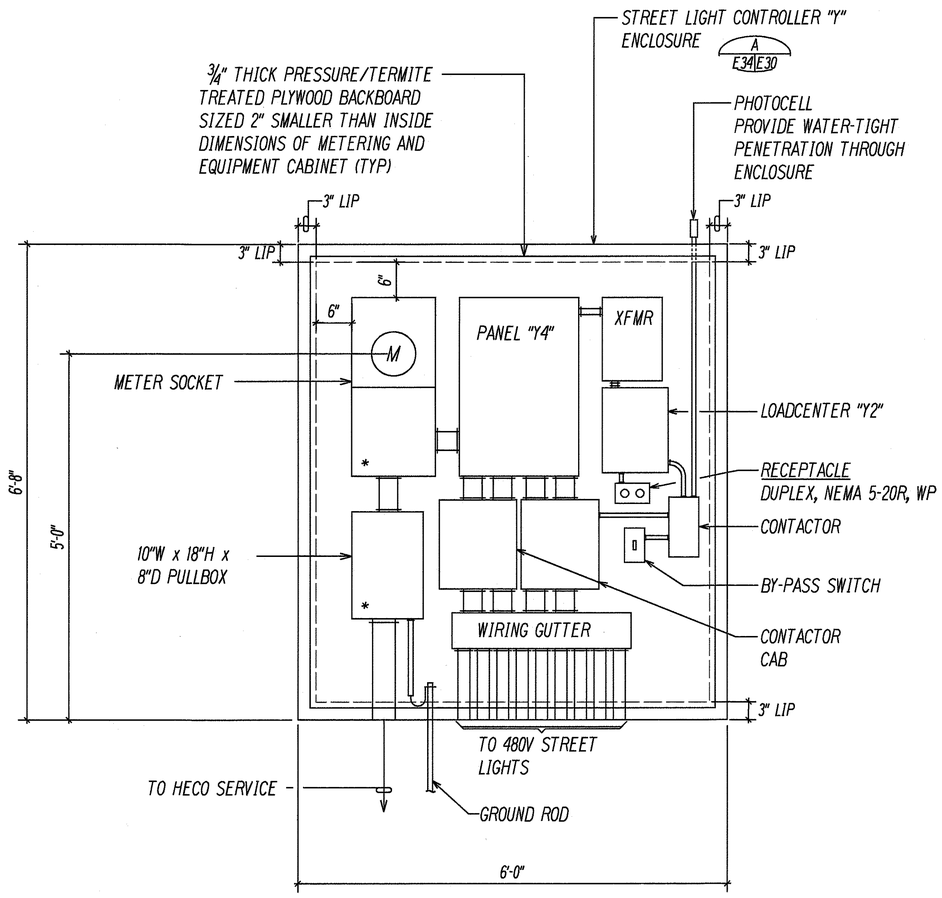

NOTE(S):

1. * INDICATES PROVISIONS FOR HECO SEALS.
2. SEE ONE-LINE DIAGRAM SHEET E35.

A
E21 E34
CONTROLLER "Y" EQUIPMENT ELEVATION
SCALE: 1"=1'-0"

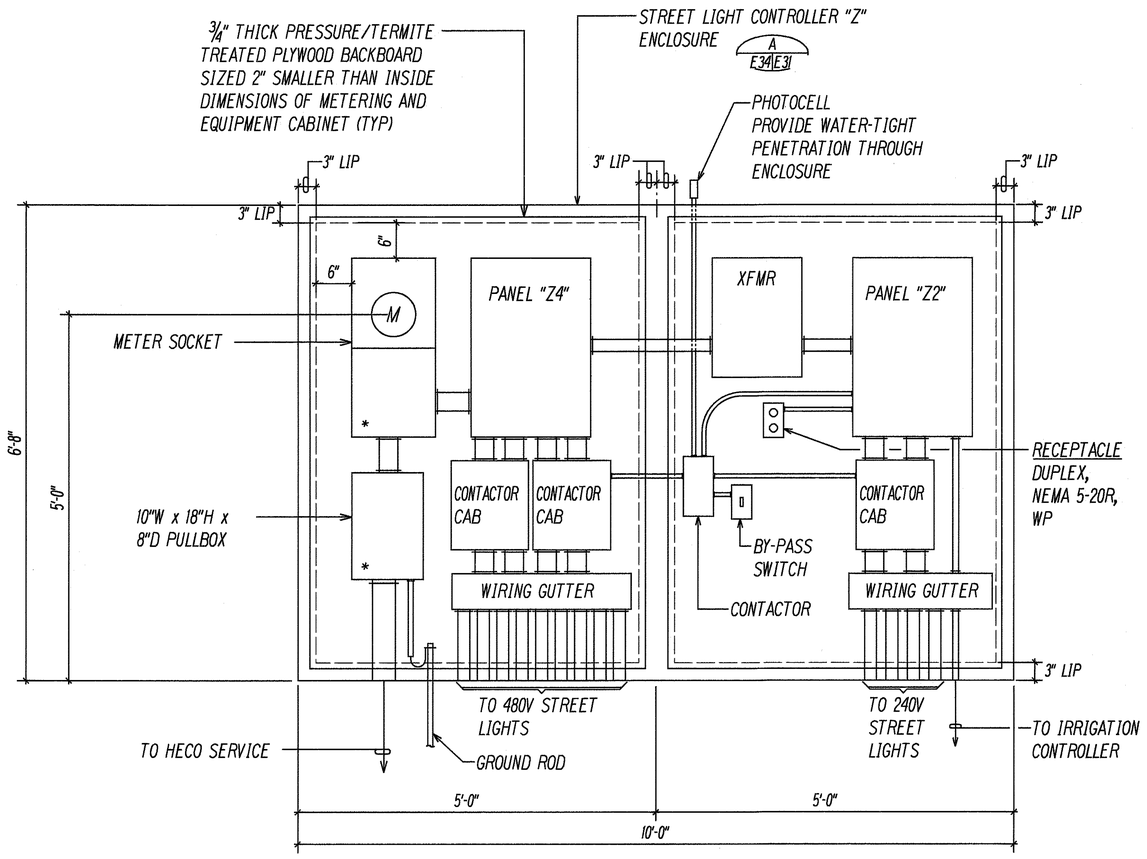

NOTE(S):

1. * INDICATES PROVISIONS FOR HECO SEALS.
2. SEE ONE-LINE DIAGRAM SHEET E36.

B
E22 E34
CONTROLLER "Z" EQUIPMENT ELEVATION
SCALE: 1"=1'-0"

1' 6" 0 1' 2' 3'
SCALE: 1"=1'-0"
GRAPHIC SCALE

GARY I. FUNASAKI
LICENSED PROFESSIONAL ENGINEER
No. 4195-E
HAWAII, U.S.A.

THIS WORK WAS PREPARED BY ME OR UNDER MY SUPERVISION.
6 NOV 1997

STATE OF HAWAII
DEPARTMENT OF TRANSPORTATION
HIGHWAYS DIVISION

CONTROLLER EQUIPMENT ELEVATIONS

INTERSTATE ROUTE H-1
Kunia Interchange Improvements
F.A.I. Project No IM-HI-1(219)

SCALE: AS NOTED DATE: OCT. 1997

SHEET No. E34 OF 43 SHEETS

ORIGINAL PLAN | SURVEY PLOTTED BY | DRAWN BY | TRACED BY | DESIGNED BY | QUANTITIES BY | CHECKED BY | DATE
NOTE BOOK | No.

LAST SAVED: 11/07/97 • 10:00:05 BY: GR PLOT SC: H:
C:\HDOT\PROJECTS\IM0001.DGN

FED. ROAD DIST. NO.	STATE	FED. AID PROJ. NO.	FISCAL YEAR	SHEET NO.	TOTAL SHEETS
HAWAII	HAW.	IM-HI-1(219)	1998	256	378

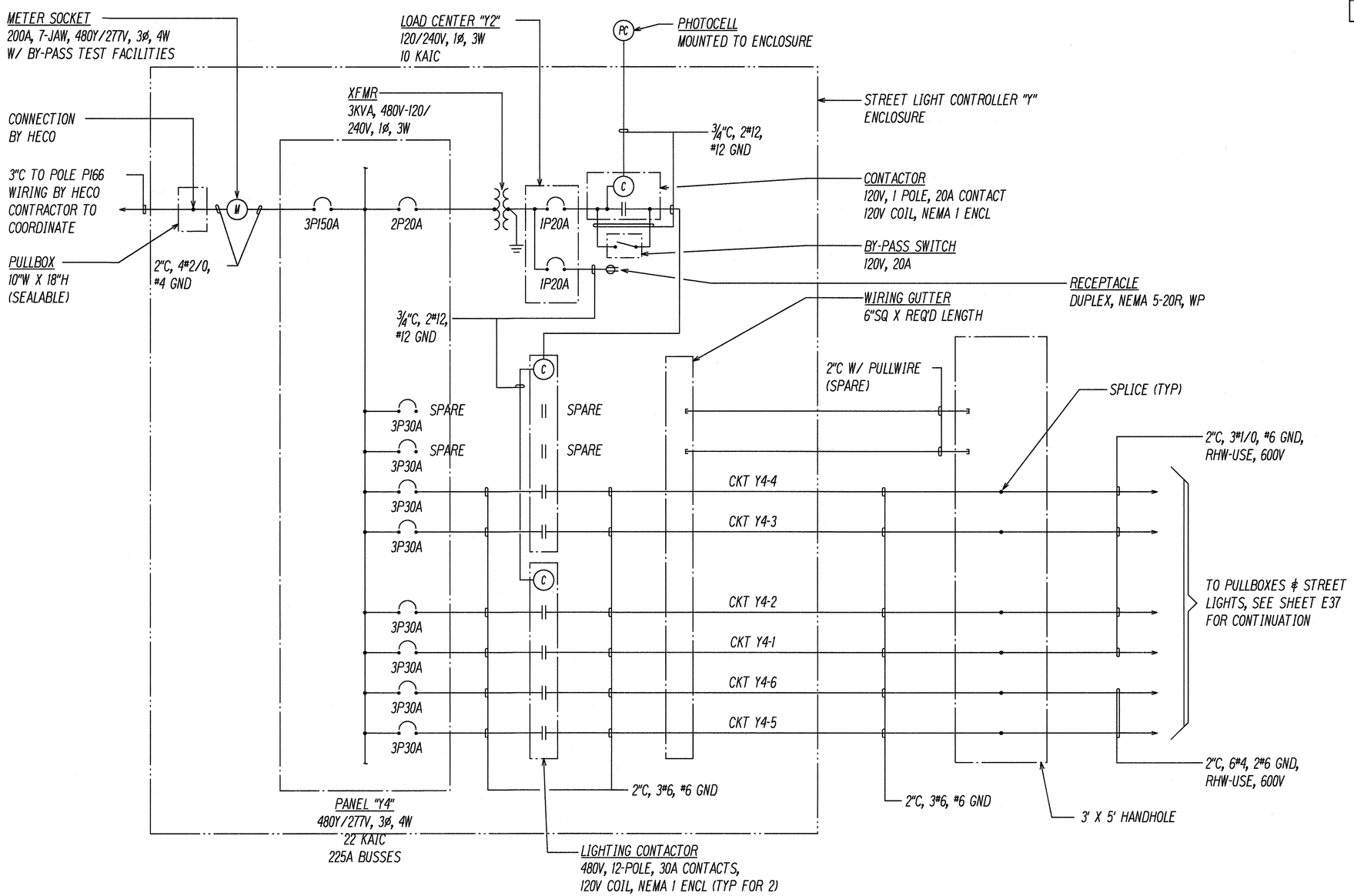

STREET LIGHT CONTROLLER "Y" ONE-LINE DIAGRAM

GARY I. FUNASAKI
LICENSED PROFESSIONAL ENGINEER
No. 4195-E
HAWAII, U.S.A.

THIS WORK WAS PREPARED BY ME OR UNDER MY SUPERVISION.

6 NOV 1997

STATE OF HAWAII
DEPARTMENT OF TRANSPORTATION
HIGHWAYS DIVISION

STREET LIGHT CONTROLLER "Y" ONE-LINE DIAGRAM

INTERSTATE ROUTE H-1
Kunia Interchange Improvements
F.A.I. Project No IM-HI-1(219)

SCALE: AS NOTED DATE: OCT. 1997

SHEET No. E35 OF 43 SHEETS

ORIGINAL PLAN | SURVEY PLOTTED BY | DRAWN BY | TRACED BY | DESIGNED BY | QUANTITIES BY | CHECKED BY | DATE
NOTE BOOK | No.

LAST SAVED: 10/07/97 @ 10:02 BY: GR PLOT SC: 1=24"
G:\ACAD\PROJECTS\IM0001\IM-E.DS

FED. ROAD DIST. NO.	STATE	FED. AID PROJ. NO.	FISCAL YEAR	SHEET NO.	TOTAL SHEETS
HAWAII	HAW.	IM-HI-1(219)	1998	257	378

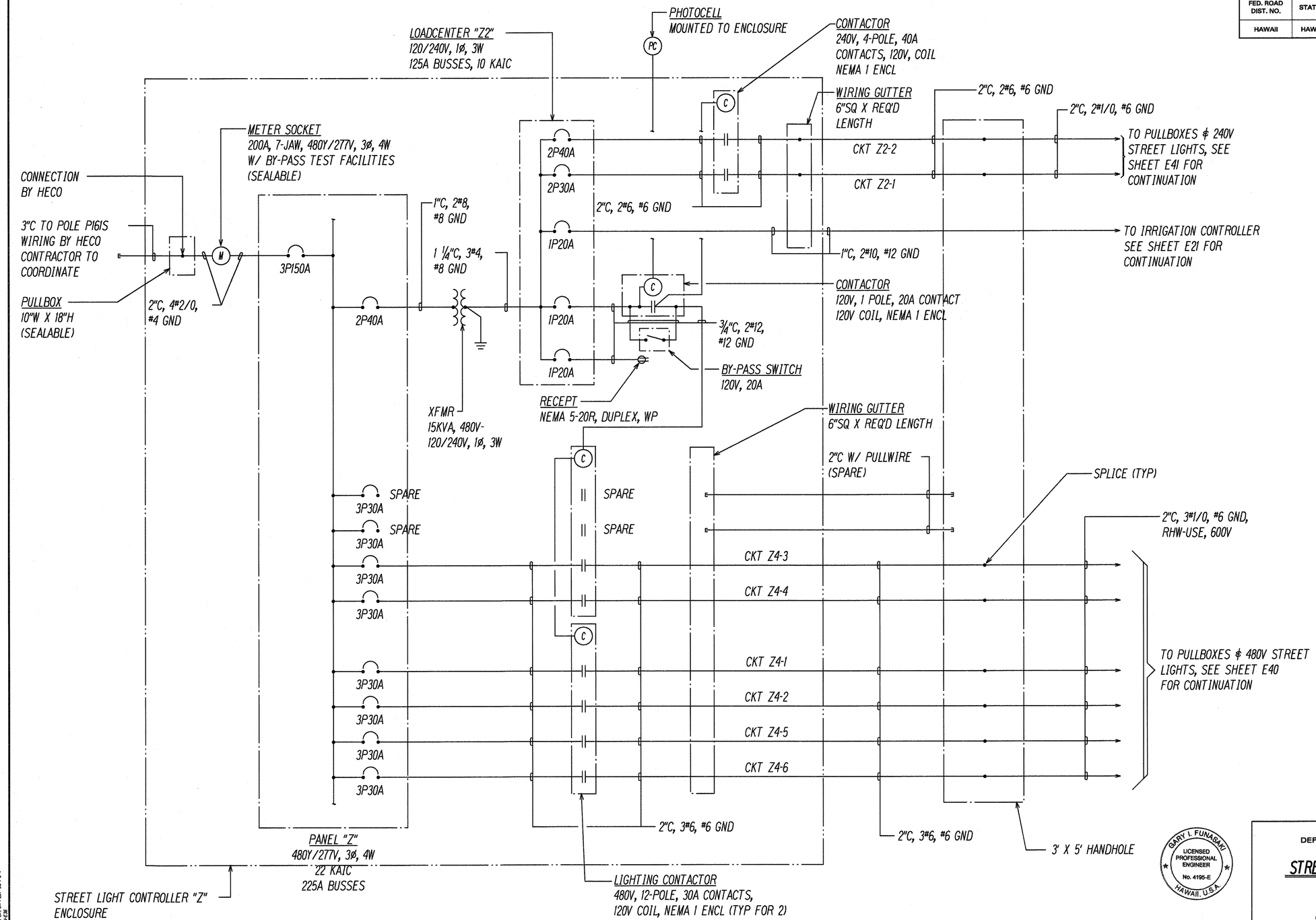

STREET LIGHT CONTROLLER "Z" ONE-LINE DIAGRAM

GARY I. FUNASAKI
LICENSED PROFESSIONAL ENGINEER
No. 4195-E
HAWAII, U.S.A.

THIS WORK WAS PREPARED BY ME OR UNDER MY SUPERVISION.
6 NOV 1997

STATE OF HAWAII
DEPARTMENT OF TRANSPORTATION
HIGHWAYS DIVISION

STREET LIGHT CONTROLLER "Z"
ONE-LINE DIAGRAM

INTERSTATE ROUTE H-1
Kunia Interchange Improvements
F.A.I. Project No IM-HI-1(219)

SCALE: AS NOTED DATE: OCT. 1997

SHEET No. E36 OF 43 SHEETS

ORIGINAL PLAN | SURVEY PLOTTED BY | DRAWN BY | TRACED BY | DESIGNED BY | QUANTITIES BY | CHECKED BY | DATE
NOTE BOOK | No.

LAST SAVED: 10/07/97 @ 10:04:35 BY: GH PLOT SC: 1=1
G:\ACAD\PROJECTS\98086\H1H1-E36

FED. ROAD DIST. NO.	STATE	FED. AID PROJ. NO.	FISCAL YEAR	SHEET NO.	TOTAL SHEETS
HAWAII	HAW.	IM-HI-1(219)	1998	258	378

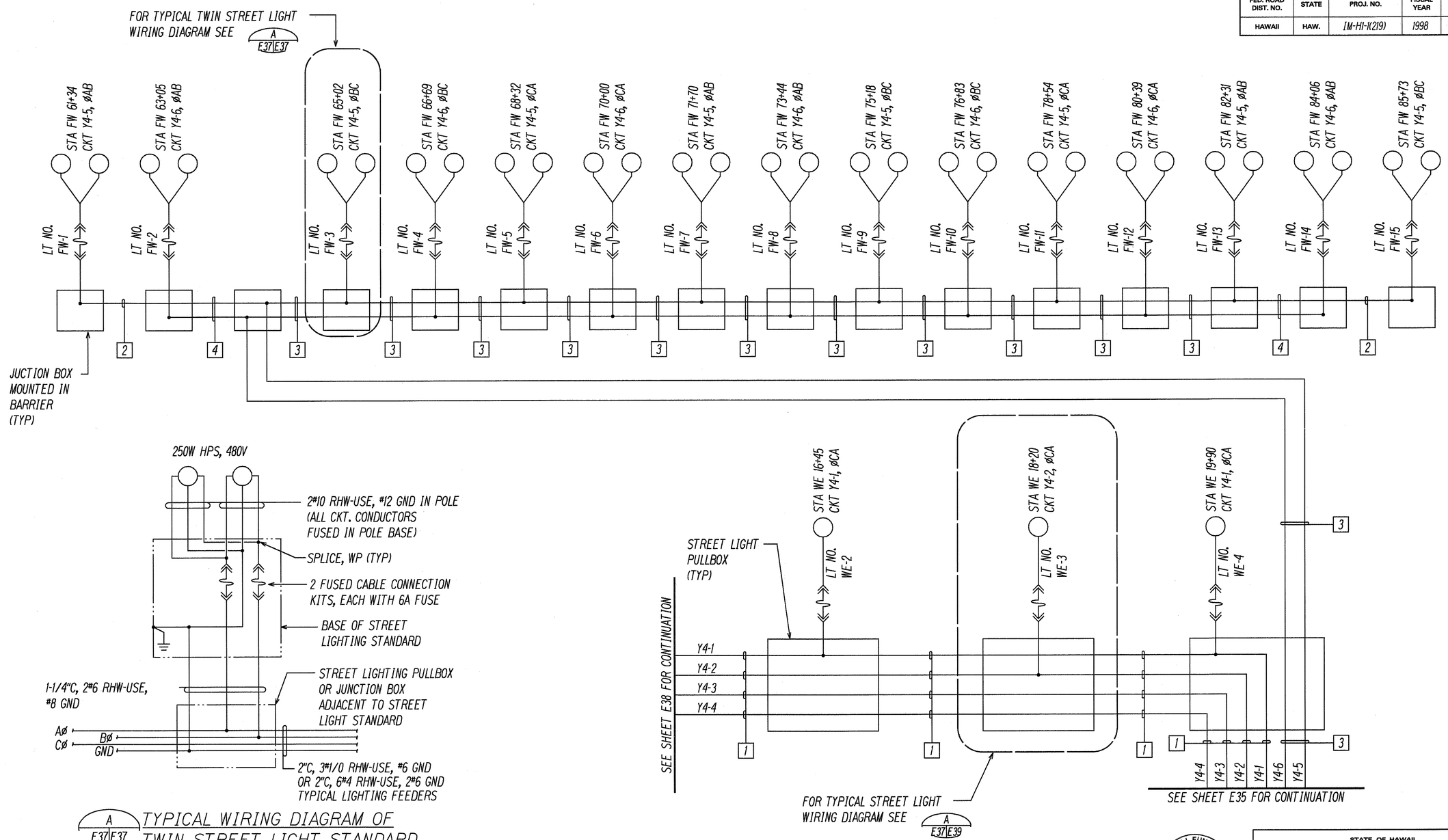

STREET LIGHT ONE-LINE DIAGRAM - I

NOT TO SCALE

NOTES:

1. 2"C, 3#1/0 RHW-USE, #6 GND.
2. 2"C, 2#4 RHW-USE, #6 GND.
3. 2"C, 6#4 RHW-USE, 2#6 GND.
4. 2"C, 4#4 RHW-USE, 2#6 GND.

GARY I. FUNASAKI LICENSED PROFESSIONAL ENGINEER No. 4195-E HAWAII, U.S.A.

THIS WORK WAS PREPARED BY ME OR UNDER MY SUPERVISION.

6 NOV 1997

STATE OF HAWAII
DEPARTMENT OF TRANSPORTATION
HIGHWAYS DIVISION

STREET LIGHT ONE-LINE DIAGRAM - I

INTERSTATE ROUTE H-1
Kunia Interchange Improvements
F.A.I. Project No IM-HI-1(219)

SCALE: AS NOTED DATE: OCT. 1997

SHEET No. E37 OF 43 SHEETS

258

ORIGINAL PLAN | NOTE BOOK | SURVEY PLOTTED BY | DRAWN BY | TRACED BY | DESIGNED BY | QUANTITIES BY | CHECKED BY | DATE

LAST SAVE: 9/17/97 @ 13:06:28 BY OR PLOT SC 1=1"
G:\HEADQ\PROJECTS\9800\FOR-CTP

FED. ROAD DIST. NO.	STATE	FED. AID PROJ. NO.	FISCAL YEAR	SHEET NO.	TOTAL SHEETS
HAWAII	HAW.	IM-HI-1(219)	1998	259	378

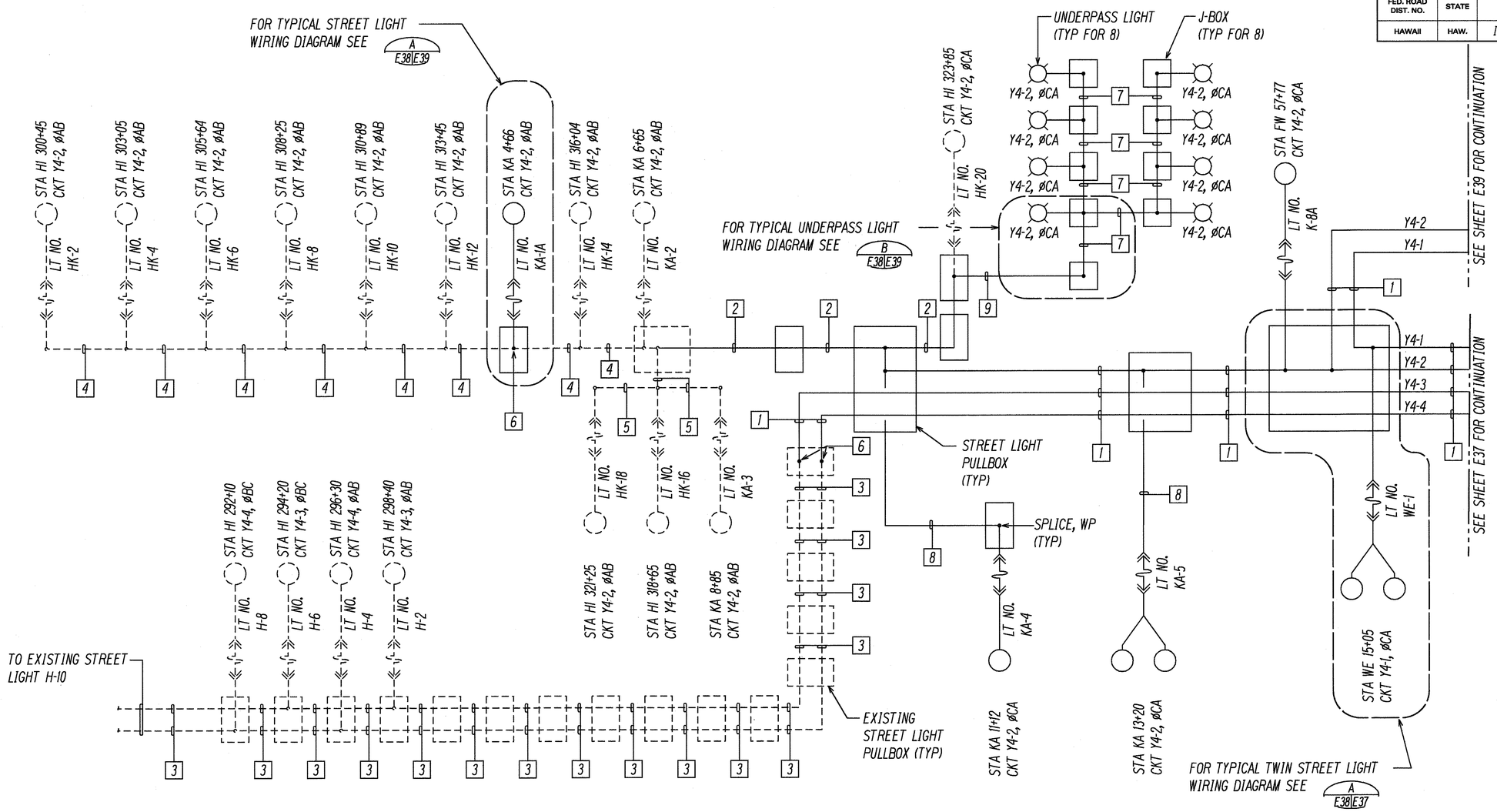

NOTES:

1. 2"C, 3#1/0 RHW-USE, #6 GND.
2. 2"C, 2#1/0 RHW-USE, #6 GND.
3. EXISTING 2"C, 3#2, #6 GND.
4. EXISTING 2#4 DIRECT BURIED CABLE.
5. EXISTING 2#8 DIRECT BURIED CABLE.
6. SPLICE TO EXISTING CABLE.
7. 3/4"C PVC-COATED GRS, 2#10 RHW-USE, #10 GND.
8. 2"C, 2#4 RHW-USE, #6 GND.
9. 2"C, 2#6 RHW-USE, #8 GND.

STREET LIGHT ONE-LINE DIAGRAM - II

NOT TO SCALE

DATE	REVISION
1/30/98	REVISED NOTE NO. 7 PER ADDENDUM NO. 2.

GARY I. FUNASAKI LICENSED PROFESSIONAL ENGINEER No. 4195-E HAWAII, U.S.A.

THIS WORK WAS PREPARED BY ME OR UNDER MY SUPERVISION.

STATE OF HAWAII
DEPARTMENT OF TRANSPORTATION
HIGHWAYS DIVISION

STREET LIGHT ONE-LINE DIAGRAM - II

INTERSTATE ROUTE H-1
Kunia Interchange Improvements
F.A.I. Project No IM-HI-1(219)

SCALE: AS NOTED DATE: OCT. 1997

SHEET No. E38 OF 43 SHEETS

ORIGINAL PLAN | NOTE BOOK | No. | SURVEY PLOTTED BY | DRAWN BY | TRACED BY | DESIGNED BY | QUANTITIES BY | CHECKED BY | DATE

$DATE$ $TIME$ $USERFILE$

FED. ROAD DIST. NO.	STATE	FED. AID PROJ. NO.	FISCAL YEAR	SHEET NO.	TOTAL SHEETS
HAWAII	HAW.	IM-HI-1(219)	1998	260	378

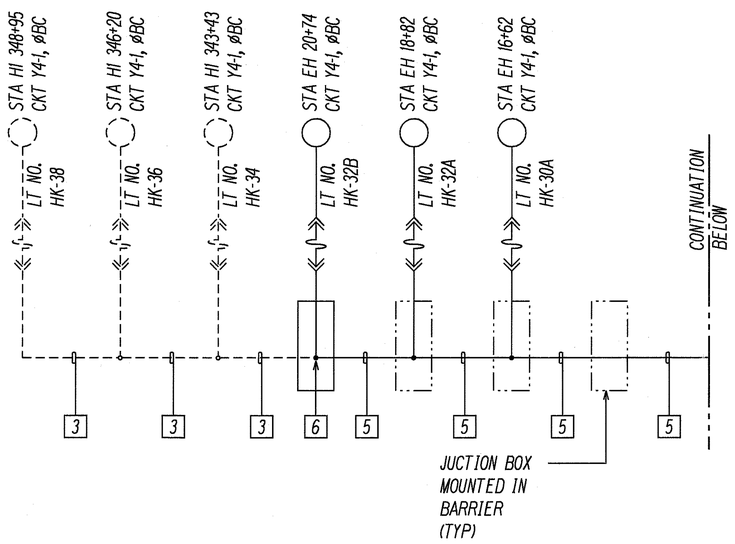

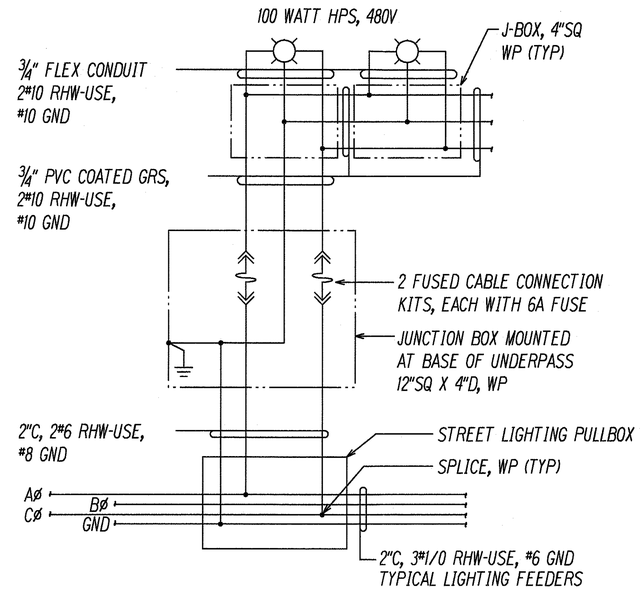

B E38 E39 TYPICAL WIRING DIAGRAM OF UNDERPASS LIGHTING

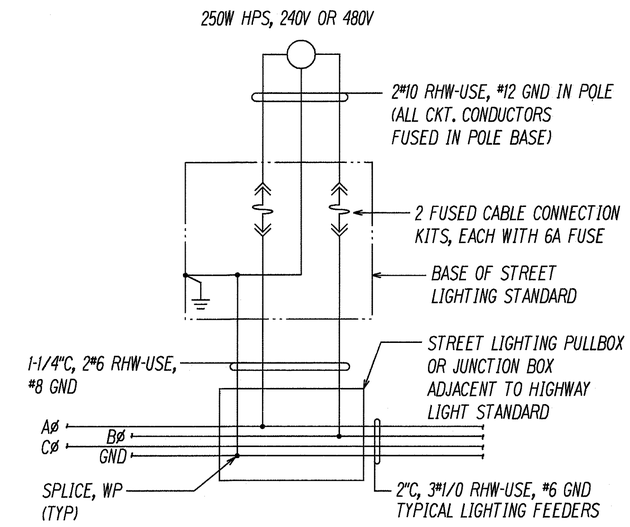

A E37 E39 TYPICAL WIRING DIAGRAM OF STREET LIGHT STANDARD

E38,E39,E40,E41

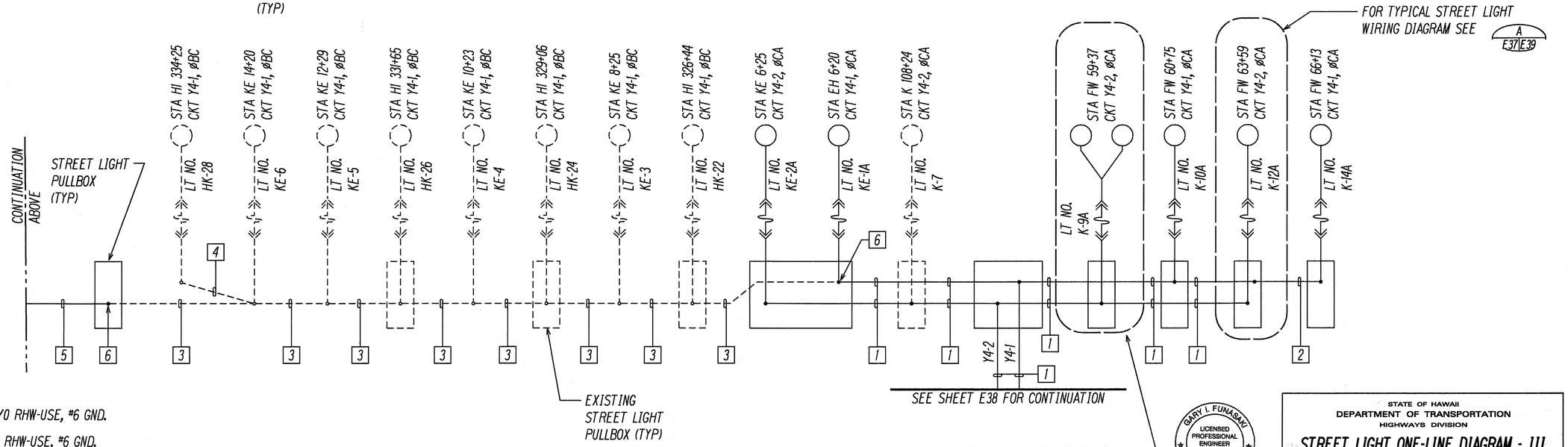

NOTES:

1. 2"C, 3#1/0 RHW-USE, #6 GND.
2. 2"C, 2#4 RHW-USE, #6 GND.
3. EXISTING 2#2 DIRECT BURIED CABLE.
4. EXISTING 2#8 DIRECT BURIED CABLE.
5. 2"C, 2#1/0 RHW-USE, #6 GND.
6. SPLICE TO EXISTING CABLE.

STREET LIGHT ONE-LINE DIAGRAM - III

NOT TO SCALE

GARY I. FUNASAKI LICENSED PROFESSIONAL ENGINEER No. 4195-E HAWAII, U.S.A.

THIS WORK WAS PREPARED BY ME OR UNDER MY SUPERVISION. 6 Nov 1997

STATE OF HAWAII
DEPARTMENT OF TRANSPORTATION
HIGHWAYS DIVISION

STREET LIGHT ONE-LINE DIAGRAM - III

INTERSTATE ROUTE H-1
Kunia Interchange Improvements
F.A.I. Project No IM-HI-1(219)

SCALE: AS NOTED DATE: OCT. 1997

SHEET No. E39 OF 43 SHEETS

ORIGINAL PLAN | NOTE BOOK | No. | DATE | SURVEY PLOTTED BY | DRAWN BY | TRACED BY | DESIGNED BY | QUANTITIES BY | CHECKED BY

LAST SAVED: 11/07/97 ● 13:09:08 BY: GH PLOT SC: 1=24"
G:\ROAD\PROJECTS\98880\FIGS\E39

FED. ROAD DIST. NO.	STATE	FED. AID PROJ. NO.	FISCAL YEAR	SHEET NO.	TOTAL SHEETS
HAWAII	HAW.	IM-HI-1(219)	1998	261	378

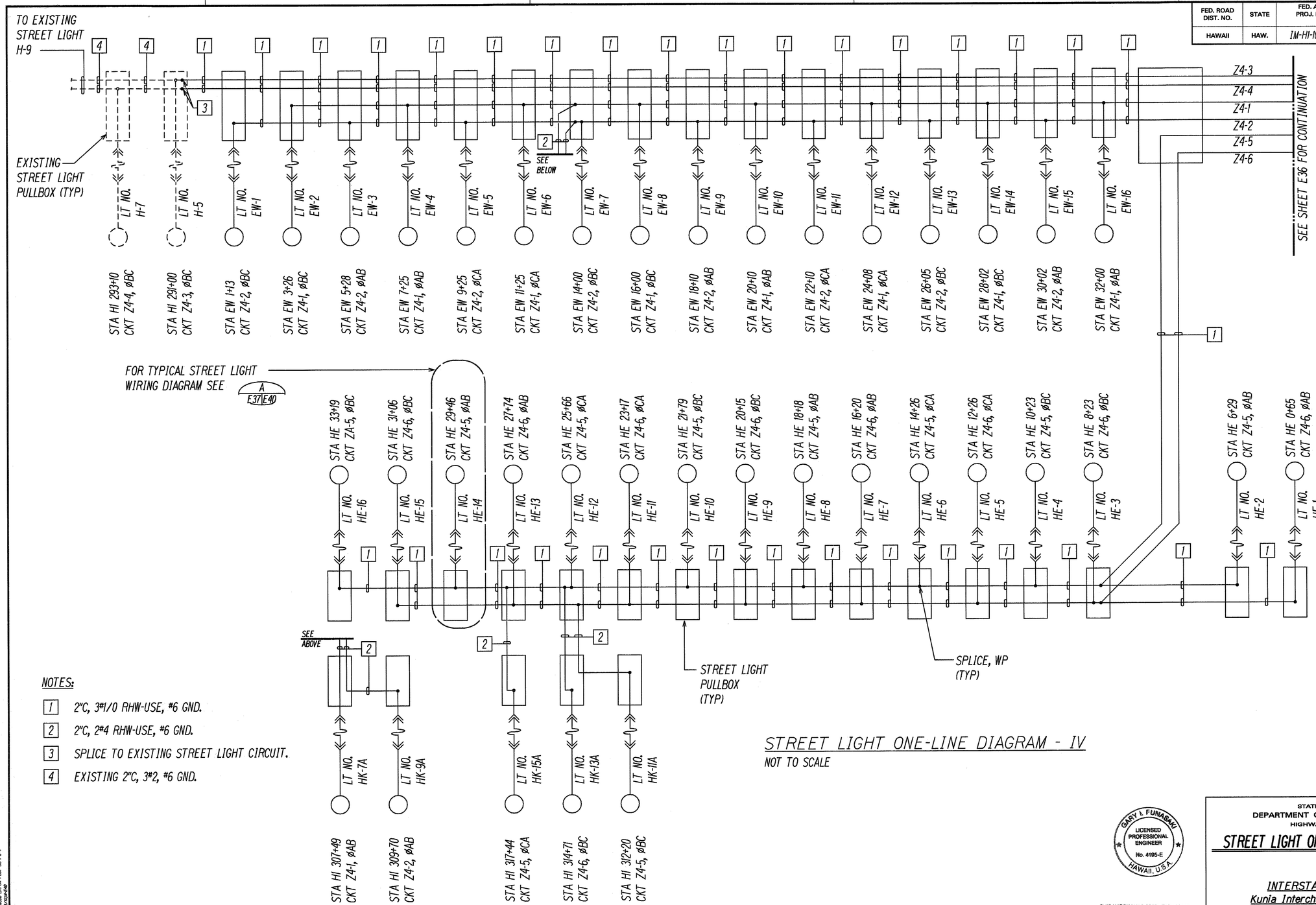

NOTES:

1. 2"C, 3#1/0 RHW-USE, #6 GND.
2. 2"C, 2#4 RHW-USE, #6 GND.
3. SPLICE TO EXISTING STREET LIGHT CIRCUIT.
4. EXISTING 2"C, 3#2, #6 GND.

STREET LIGHT ONE-LINE DIAGRAM - IV

NOT TO SCALE

GARY I. FUNASAKI LICENSED PROFESSIONAL ENGINEER No. 4195-E HAWAII, U.S.A.

THIS WORK WAS PREPARED BY ME OR UNDER MY SUPERVISION.

6 NOV 1997

STATE OF HAWAII
DEPARTMENT OF TRANSPORTATION
HIGHWAYS DIVISION

STREET LIGHT ONE-LINE DIAGRAM - IV

INTERSTATE ROUTE H-1
Kunia Interchange Improvements
F.A.I. Project No IM-HI-1(219)

SCALE: AS NOTED DATE: OCT. 1997

SHEET No. E40 OF 43 SHEETS

ORIGINAL PLAN | SURVEY PLOTTED BY | DRAWN BY | TRACED BY | DESIGNED BY | REVIEWED BY | QUANTITIES BY | CHECKED BY | DATE

NOTE BOOK No.

LAST SAVED: 10/07/97 @ 13:00:00 BY: GH PLOT SC: 1=24"
G:\ACAD\PROJECTS\9800\10\E40

FED. ROAD DIST. NO.	STATE	FED. AID PROJ. NO.	FISCAL YEAR	SHEET NO.	TOTAL SHEETS
HAWAII	HAW.	IM-HI-1(219)	1998	262	378

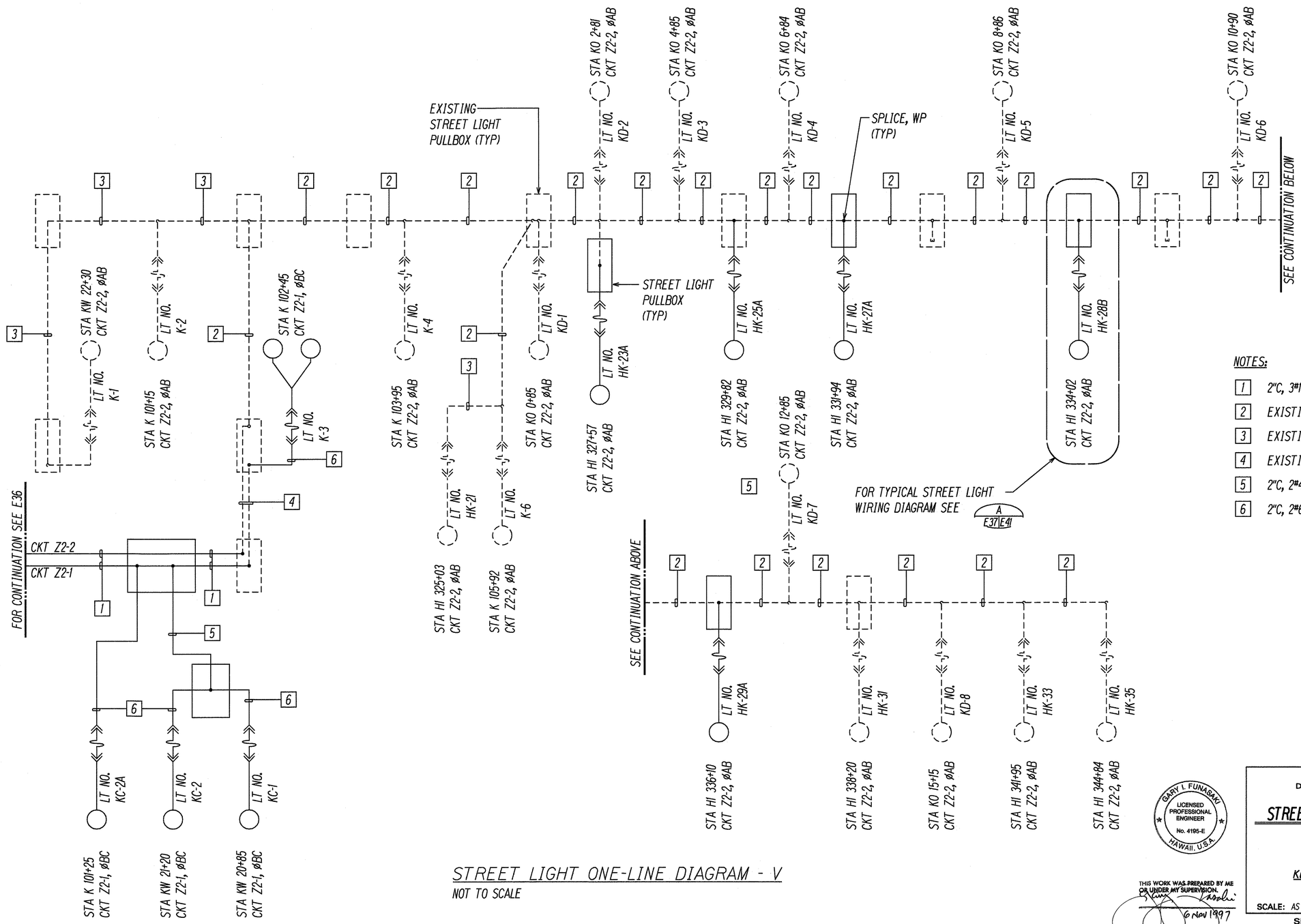

NOTES:

1. 2"C, 3#1/0 RHW-USE, #6 GND.
2. EXISTING 2#2 DIRECT BURIED CABLE.
3. EXISTING 2#8 DIRECT BURIED CABLE.
4. EXISTING 2"C, 2#2, 2#8.
5. 2"C, 2#4 RHW-USE, #6 GND.
6. 2"C, 2#6 RHW-USE, #6 GND.

STREET LIGHT ONE-LINE DIAGRAM - V

NOT TO SCALE

ORIGINAL PLAN	SURVEY PLOTTED BY	DATE
	DRAWN BY	
	TRACED BY	
NOTE BOOK	DESIGNED BY	
	QUANTITIES BY	
No.	CHECKED BY	

LAST SHEET: 9/07/97 ● SUNY BY OR PLOT SC 1"=1"

GARY I. FUNASAKI LICENSED PROFESSIONAL ENGINEER No. 4195-E HAWAII, U.S.A.

THIS WORK WAS PREPARED BY ME OR UNDER MY SUPERVISION.

6 Nov 1997

STATE OF HAWAII
DEPARTMENT OF TRANSPORTATION
HIGHWAYS DIVISION

STREET LIGHT ONE-LINE DIAGRAM - V

INTERSTATE ROUTE H-1
Kunia Interchange Improvements
F.A.I. Project No IM-H1-1(219)

SCALE: AS NOTED DATE: OCT. 1997

SHEET No. E41 OF 43 SHEETS

FED. ROAD DIST. NO.	STATE	FED. AID PROJ. NO.	FISCAL YEAR	SHEET NO.	TOTAL SHEETS
HAWAII	HAW.	IM-HI-1(219)	1998	263	378

STREET LIGHT ID TAG SCHEDULE - I

HIGHWAY LIGHT STA. NUMBER	ID TAG ITEMS						HIGHWAY LIGHT STA. NUMBER	ID TAG ITEMS					
	LIGHT POLE NO.	METER NO.	CIRCUIT NO.	LINE VOLTAGE	LAMP DATA	REFRACTOR DATA		LIGHT POLE NO.	METER NO.	CIRCUIT NO.	LINE VOLTAGE	LAMP DATA	REFRACTOR DATA
H-1 300+45	HK-2	Y	Y4-2ØAB	480V	N250	MSIII	FW 66+13	K-14A	Y	Y4-1ØCA	480V	N250	MSIII
H-1 303+05	HK-4	Y	Y4-2ØAB	480V	N250	MSIII	WE 15+05	WE-1	Y	Y4-1ØCA	480V	N250	MSIII
H-1 305+64	HK-6	Y	Y4-2ØAB	480V	N250	MSIII	WE 16+45	WE-2	Y	Y4-1ØCA	480V	N250	MSIII
H-1 308+25	HK-8	Y	Y4-2ØAB	480V	N250	MSIII	WE 18+20	WE-3	Y	Y4-2ØCA	480V	N250	MSIII
H-1 310+89	HK-10	Y	Y4-2ØAB	480V	N250	MSIII	WE 19+90	WE-4	Y	Y4-1ØCA	480V	N250	MSIII
H-1 313+45	HK-12	Y	Y4-2ØAB	480V	N250	MSIII	FW 61+34	FW-1	Y	Y4-5ØAB	480V	N250	MSIII
H-1 316+04	HK-14	Y	Y4-2ØAB	480V	N250	MSIII	FW 63+05	FW-2	Y	Y4-6ØAB	480V	N250	MSIII
H-1 318+65	HK-16	Y	Y4-2ØAB	480V	N250	MSIII	FW 65+02	FW-3	Y	Y4-5ØBC	480V	N250	MSIII
H-1 321+25	HK-18	Y	Y4-2ØAB	480V	N250	MSIII	FW 66+69	FW-4	Y	Y4-6ØBC	480V	N250	MSIII
H-1 323+85	HK-20	Y	Y4-2ØCA	480V	N250	MSIII	FW 68+32	FW-5	Y	Y4-5ØCA	480V	N250	MSIII
H-1 326+44	HK-22	Y	Y4-1ØBC	480V	N250	MSIII	FW 70+00	FW-6	Y	Y4-6ØCA	480V	N250	MSIII
H-1 329+06	HK-24	Y	Y4-1ØBC	480V	N250	MSIII	FW 71+70	FW-7	Y	Y4-5ØAB	480V	N250	MSIII
H-1 331+65	HK-26	Y	Y4-1ØBC	480V	N250	MSIII	FW 73+44	FW-8	Y	Y4-6ØAB	480V	N250	MSIII
H-1 334+25	HK-28	Y	Y4-1ØBC	480V	N250	MSIII	FW 75+18	FW-9	Y	Y4-5ØBC	480V	N250	MSIII
EH 16+62	HK-30A	Y	Y4-1ØBC	480V	N250	MSIII	FW 76+83	FW-10	Y	Y4-6ØBC	480V	N250	MSIII
EH 18+82	HK-32A	Y	Y4-1ØBC	480V	N250	MSIII	FW 78+54	FW-11	Y	Y4-5ØCA	480V	N250	MSIII
EH 20+74	HK-34A	Y	Y4-1ØBC	480V	N250	MSIII	FW 80+39	FW-12	Y	Y4-6ØCA	480V	N250	MSIII
HI 343+43	HK-34	Y	Y4-1ØBC	480V	N250	MSIII	FW 82+31	FW-13	Y	Y4-5ØAB	480V	N250	MSIII
HI 346+20	HK-36	Y	Y4-1ØBC	480V	N250	MSIII	FW 84+06	FW-14	Y	Y4-6ØAB	480V	N250	MSIII
HI 348+95	HK-38	Y	Y4-1ØBC	480V	N250	MSIII	FW 85+73	FW-15	Y	Y4-5ØBC	480V	N250	MSIII
WE 4+66	KA-1A	Y	Y4-2ØAB	480V	N250	MSIII	HI 298+40	H-2	Y	Y4-3ØAB	480V	N250	MSIII
WE 6+65	KA-2	Y	Y4-2ØAB	480V	N250	MSIII	HI 296+30	H-4	Y	Y4-4ØAB	480V	N250	MSIII
WE 8+85	KA-3	Y	Y4-2ØAB	480V	N250	MSIII	HI 294+20	H-6	Y	Y4-3ØBC	480V	N250	MSIII
WE 11+05	KA-4	Y	Y4-2ØCA	480V	N250	MSIII	HI 292+10	H-8	Y	Y4-4ØBC	480V	N250	MSIII
WE 13+15	KA-5	Y	Y4-2ØCA	480V	N250	MSIII	KA 11+12	KA-4	Y	Y4-2ØCA	480V	N250	MSIII
EH 6+20	KE-1A	Y	Y4-1ØCA	480V	N250	MSIII	KA 13+20	KA-5	Y	Y4-2ØCA	480V	N250	MSIII
KE 6+25	KE-2A	Y	Y4-2ØCA	480V	N250	MSIII							
KE 8+25	KE-3	Y	Y4-1ØBC	480V	N250	MSIII							
KE 10+23	KE-4	Y	Y4-1ØBC	480V	N250	MSIII							
KE 12+29	KE-5	Y	Y4-1ØBC	480V	N250	MSIII							
KE 14+20	KE-6	Y	Y4-1ØBC	480V	N250	MSIII							
K 108+24	K-7	Y	Y4-2ØCA	480V	N250	MSIII							
FW 57+77	K-8A	Y	Y4-2ØCA	480V	N250	MSIII							
FW 59+37	K-9A	Y	Y4-2ØCA	480V	N250	MSIII							
FW 60+75	K-10A	Y	Y4-1ØCA	480V	N250	MSIII							
FW 63+59	K-12A	Y	Y4-2ØCA	480V	N250	MSIII							

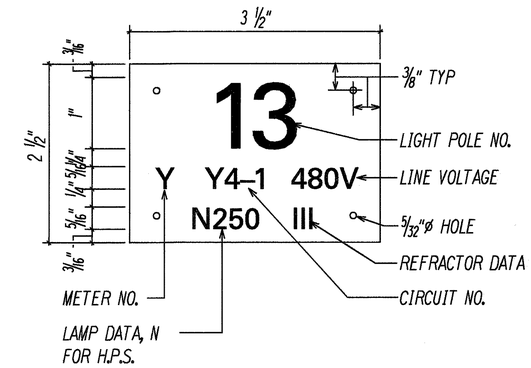

NOTES:

1. USE 3 PLY LAMINATED FLEXIBLE PLASTIC BLACK-WHITE-BLACK THICKNESS BLACK CAP SHEET-0.010", WHITE BASE SHEET-0.52", BLACK SHEET-0.010".
2. LIGHT POLE NUMBER SIZE SHALL BE 1" HIGH AND ENGRAVED 1/8" WIDE, WHITE IN COLOR (NUMBER AS REQUIRED).
3. NOMENCLATURE SIZE SHALL BE 5/16" HIGH AND ENGRAVED 1/32" WIDE, WHITE IN COLOR (METER NUMBER, CIRCUIT NUMBER, LINE VOLTAGE, LAMP DATA AND REFRACTOR DATA AS REQUIRED).
4. ATTACH TO STEEL POLES WITH NO.8 STAINLESS STEEL, 1/2" LONG DRIVE SCREWS IN 1/8" DRILL HOLE.
5. NUMBERS ARE INSCRIBED BY CUTTING THROUGH "BLACK CAP SHEET" TO EXPOSE "WHITE LETTERS".
6. ASSIGN CIRCUIT NUMBER FOR SYSTEMS WITH TWO OR MORE CIRCUITS (LETTER INDICATES PANEL BOARD, NUMBER INDICATES CIRCUIT).
7. HEIGHT FOR LIGHT POLE NUMBER AND NOMENCLATURE MAY BE ADJUSTED TO FIT REQUIRED DIGITS.

A E26 E42 E29 HIGHWAY LIGHT I.D. TAG DETAIL
NOT TO SCALE

GARY I. FUNASAKI LICENSED PROFESSIONAL ENGINEER No. 4195-E HAWAII, U.S.A.

THIS WORK WAS PREPARED BY ME OR UNDER MY SUPERVISION.
6 NOV 1997

STATE OF HAWAII
DEPARTMENT OF TRANSPORTATION
HIGHWAYS DIVISION

STREET LIGHT ID TAG SCHEDULE - I

INTERSTATE ROUTE H-1
Kunia Interchange Improvements
F.A.I. Project No IM-H1-1(219)

SCALE: AS NOTED DATE: OCT. 1997

SHEET No. E42 OF 43 SHEETS

ORIGINAL PLAN | NOTE BOOK | No. | SURVEY PLOTTED BY | DRAWN BY | TRACED BY | DESIGNED BY | QUANTITIES BY | CHECKED BY | DATE

LAST SAVE: 10/17/97 IN ISA38 BY: GR PLOT SC 1=1*1
G:\ACAD\PROJECTS\9800\IM\E42

FED. ROAD DIST. NO.	STATE	FED. AID PROJ. NO.	FISCAL YEAR	SHEET NO.	TOTAL SHEETS
HAWAII	HAW.	IM-HI-1(219)	1998	264	378

STREET LIGHT ID TAG SCHEDULE - II

HIGHWAY LIGHT STA. NUMBER	ID TAG ITEMS						HIGHWAY LIGHT STA. NUMBER	ID TAG ITEMS					
	LIGHT POLE NO.	METER NO.	CIRCUIT NO.	LINE VOLTAGE	LAMP DATA	REFRACTOR DATA		LIGHT POLE NO.	METER NO.	CIRCUIT NO.	LINE VOLTAGE	LAMP DATA	REFRACTOR DATA
H-1 293+10	H-5	Z	Z4-4ØBC	480V	N250	MSIII	HE 18+18	HE-8	Z	Z4-5ØAB	480V	N250	MSIII
H-1 291+00	H-7	Z	Z4-3ØBC	480V	N250	MSIII	HE 20+15	HE-9	Z	Z4-6ØBC	480V	N250	MSIII
H-1 307+49	HK-7A	Z	Z4-1ØAB	480V	N250	MSIII	HE 21+79	HE-10	Z	Z4-5ØBC	480V	N250	MSIII
H-1 309+70	HK-9A	Z	Z4-2ØAB	480V	N250	MSIII	HE 23+17	HE-11	Z	Z4-6ØCA	480V	N250	MSIII
H-1 312+20	HK-11A	Z	Z4-5ØBC	480V	N250	MSIII	HE 25+66	HE-12	Z	Z4-5ØCA	480V	N250	MSIII
H-1 314+71	HK-13A	Z	Z4-6ØBC	480V	N250	MSIII	HE 27+74	HE-13	Z	Z4-6ØAB	480V	N250	MSIII
H-1 317+44	HK-15A	Z	Z4-5ØCA	480V	N250	MSIII	HE 29+46	HE-14	Z	Z4-5ØAB	480V	N250	MSIII
H-1 325+03	HK-21	Z	Z2-2ØAB	240V	N250	MSIII	HE 31+06	HE-15	Z	Z4-6ØBC	480V	N250	MSIII
H-1 327+57	HK-23A	Z	Z2-2ØAB	240V	N250	MSIII	HE 33+19	HE-16	Z	Z4-5ØBC	480V	N250	MSIII
H-1 329+82	HK-25A	Z	Z2-2ØAB	240V	N250	MSIII	KW 22+30	K-1	Z	Z2-2ØAB	240V	N250	MSIII
H-1 331+94	HK-27A	Z	Z2-2ØAB	240V	N250	MSIII	K 101+15	K-2	Z	Z2-2ØAB	240V	N250	MSIII
H-1 334+02	HK-28B	Z	Z2-2ØAB	240V	N250	MSIII	K 102+45	K-3	Z	Z2-1ØAB	240V	N250	MSIII
H-1 336+10	HK-29A	Z	Z2-2ØAB	240V	N250	MSIII	K 103+95	K-4	Z	Z2-2ØAB	240V	N250	MSIII
H-1 338+20	HK-31	Z	Z2-2ØAB	240V	N250	MSIII	K 105+92	K-6	Z	Z2-2ØAB	240V	N250	MSIII
H-1 341+95	HK-33	Z	Z2-2ØAB	240V	N250	MSIII	KW 20+85	KC-1	Z	Z2-1ØBC	240V	N250	MSIII
H-1 344+84	HK-35	Z	Z2-2ØAB	240V	N250	MSIII	KW 21+20	KC-2	Z	Z2-1ØBC	240V	N250	MSIII
EW 1+13	EW-1	Z	Z4-2ØBC	480V	N250	MSIII	K 101+25	KC-2A	Z	Z2-1ØBC	240V	N250	MSIII
EW 3+26	EW-2	Z	Z4-1ØBC	480V	N250	MSIII	KO 0+85	KD-1	Z	Z2-2ØAB	240V	N250	MSIII
EW 5+28	EW-3	Z	Z4-2ØAB	480V	N250	MSIII	KO 2+81	KD-2	Z	Z2-2ØAB	240V	N250	MSIII
EW 7+25	EW-4	Z	Z4-1ØAB	480V	N250	MSIII	KO 4+85	KD-3	Z	Z2-2ØAB	240V	N250	MSIII
EW 9+25	EW-5	Z	Z4-2ØCA	480V	N250	MSIII	KO 6+84	KD-4	Z	Z2-2ØAB	240V	N250	MSIII
EW 11+25	EW-6	Z	Z4-1ØCA	480V	N250	MSIII	KO 8+86	KD-5	Z	Z2-2ØAB	240V	N250	MSIII
EW 14+00	EW-7	Z	Z4-2ØBC	480V	N250	MSIII	KO 10+90	KD-6	Z	Z2-2ØAB	240V	N250	MSIII
EW 16+00	EW-8	Z	Z4-1ØBC	480V	N250	MSIII	KO 12+85	KD-7	Z	Z2-2ØAB	240V	N250	MSIII
EW 18+10	EW-9	Z	Z4-2ØAB	480V	N250	MSIII	KO 15+15	KD-8	Z	Z2-2ØAB	240V	N250	MSIII
EW 20+10	EW-10	Z	Z4-1ØAB	480V	N250	MSIII	KW 20+85	KC-1	Z	Z2-1ØBC	240V	N250	MSIII
EW 22+10	EW-11	Z	Z4-2ØCA	480V	N250	MSIII	KW 21+20	KC-2	Z	Z2-1ØBC	240V	N250	MSIII
EW 24+08	EW-12	Z	Z4-1ØCA	480V	N250	MSIII	K 101+25	KC-2A	Z	Z2-1ØBC	240V	N250	MSIII
EW 26+05	EW-13	Z	Z4-2ØBC	480V	N250	MSIII	K 102+45	K-3	Z	Z2-1ØBC	240V	N250	MSIII
EW 28+02	EW-14	Z	Z4-1ØBC	480V	N250	MSIII							
EW 30+02	EW-15	Z	Z4-2ØAB	480V	N250	MSIII							
EW 32+00	EW-16	Z	Z4-1ØAB	480V	N250	MSIII							
HE 0+65	HE-1	Z	Z4-6ØAB	480V	N250	MSIII							
HE 6+29	HE-2	Z	Z4-5ØAB	480V	N250	MSIII							
HE 8+23	HE-3	Z	Z4-6ØBC	480V	N250	MSIII							
HE 10+23	HE-4	Z	Z4-5ØBC	480V	N250	MSIII							
HE 12+26	HE-5	Z	Z4-6ØCA	480V	N250	MSIII							
HE 14+26	HE-6	Z	Z4-5ØCA	480V	N250	MSIII							
HE 16+20	HE-7	Z	Z4-6ØAB	480V	N250	MSIII							

ORIGINAL PLAN | NOTE BOOK | No. | SURVEY PLOTTED BY | SURVEY BY | TRACED BY | DESIGNED BY | QUANTITIES BY | CHECKED BY | DATE

LAST SAVED: 10/27/97 ● PLOTTED BY: GR PLOT SCALE: 1:1 ● PLOT DATE: 11/06/97

GARY I. FUNASAKI
LICENSED PROFESSIONAL ENGINEER
No. 4195-E
HAWAII, U.S.A.

THIS WORK WAS PREPARED BY ME OR UNDER MY SUPERVISION.

6 NOV 1997

STATE OF HAWAII
DEPARTMENT OF TRANSPORTATION
HIGHWAYS DIVISION

STREET LIGHT ID TAG SCHEDULE - II

INTERSTATE ROUTE H-1
Kunia Interchange Improvements
F.A.I. Project No IM-HI-1(219)

SCALE: AS NOTED DATE: OCT. 1997

SHEET No. E43 OF 43 SHEETS