FED. ROAD DIST. NO.	STATE	PROJ. NO.	FISCAL YEAR	SHEET NO.	TOTAL SHEETS
HAWAII	HAW.	H1EFG-01-96	1998	177	344

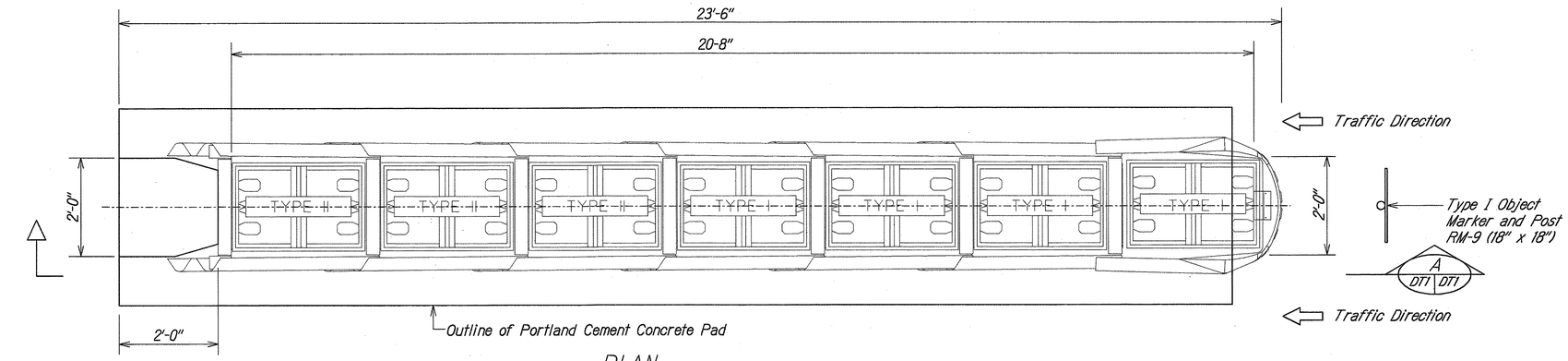

PLAN

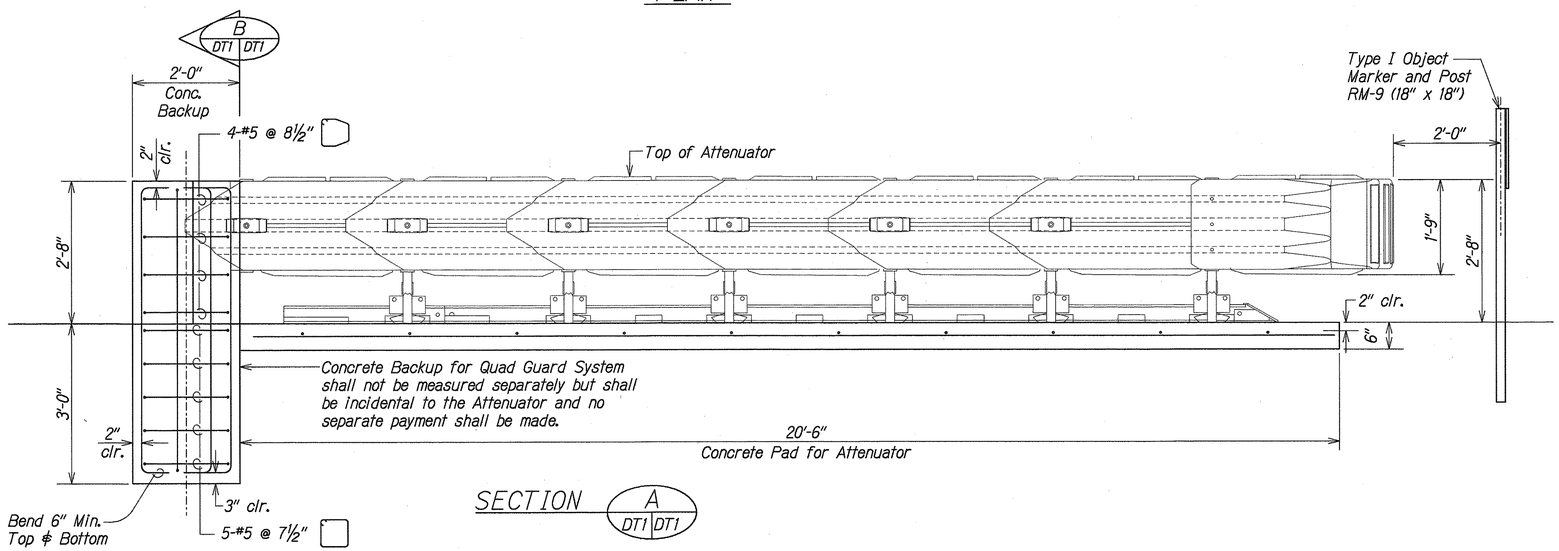

SECTION A DT1 DT1

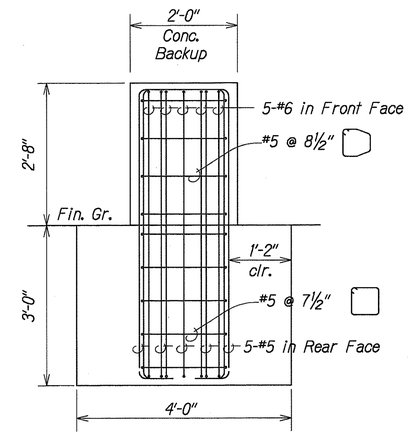

SECTION B DT1 DT1

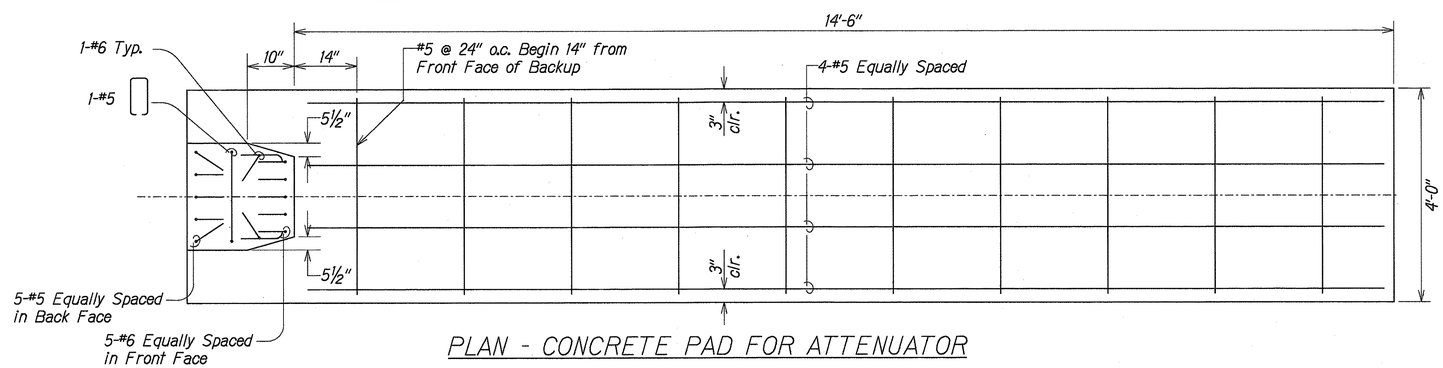

PLAN - CONCRETE PAD FOR ATTENUATOR

QUADGUARD SYSTEM ATTENUATOR

Scale: ¾" = 1'-0"

Notes

1. Attenuator shall be the QuadGuard System or equivalent.
2. Additional designs and details required for the installation of the QuadGuard System shall be provided by the manufacturer.
3. The installation of the QuadGuard System and all appurtenances shall be in accordance with the manufacturer's recommendations and requirements.
4. Slope and grade of the concrete pad shall be determined in the field.

REDUCED PLAN
(HALF SIZE)
0 1 2 3
3 INCHES ON ORIGINAL PLAN

DERRICK C. ELFALAN
LICENSED PROFESSIONAL ENGINEER
No. 5448-C
HAWAII, U.S.A.

THIS WORK WAS PREPARED BY ME OR UNDER MY SUPERVISION

PorEn, Inc.
dba PARK ENGINEERING

STATE OF HAWAII
DEPARTMENT OF TRANSPORTATION
HIGHWAYS DIVISION

QUADGUARD ATTENUATOR

INTERSTATE ROUTE H-1
CONTRAFLOW AND SHOULDER LANE
Waiawa Interchange to Keehi Interchange
PROJECT NO. H1EFG-01-96

Scale: As Noted Date: October, 1997

SHEET No. DT1 OF 8 SHEETS

ORIGINAL PLAN
SURVEY PLOTTED BY
SURVEY BY
TRACED BY
NOTE BOOK
DESIGNED BY
QUANTITIES BY
CHECKED BY
DATE
No.