FED. ROAD DIST. NO.	STATE	FED. AID PROJ. NO.	FISCAL YEAR	SHEET NO.	TOTAL SHEETS
HAWAII	HAW.	IM-HI-1(222)	1997	35	104

*Construction Signs with Posts Shall be Installed at the Start of Construction and Shall be Removed at the End of Construction.

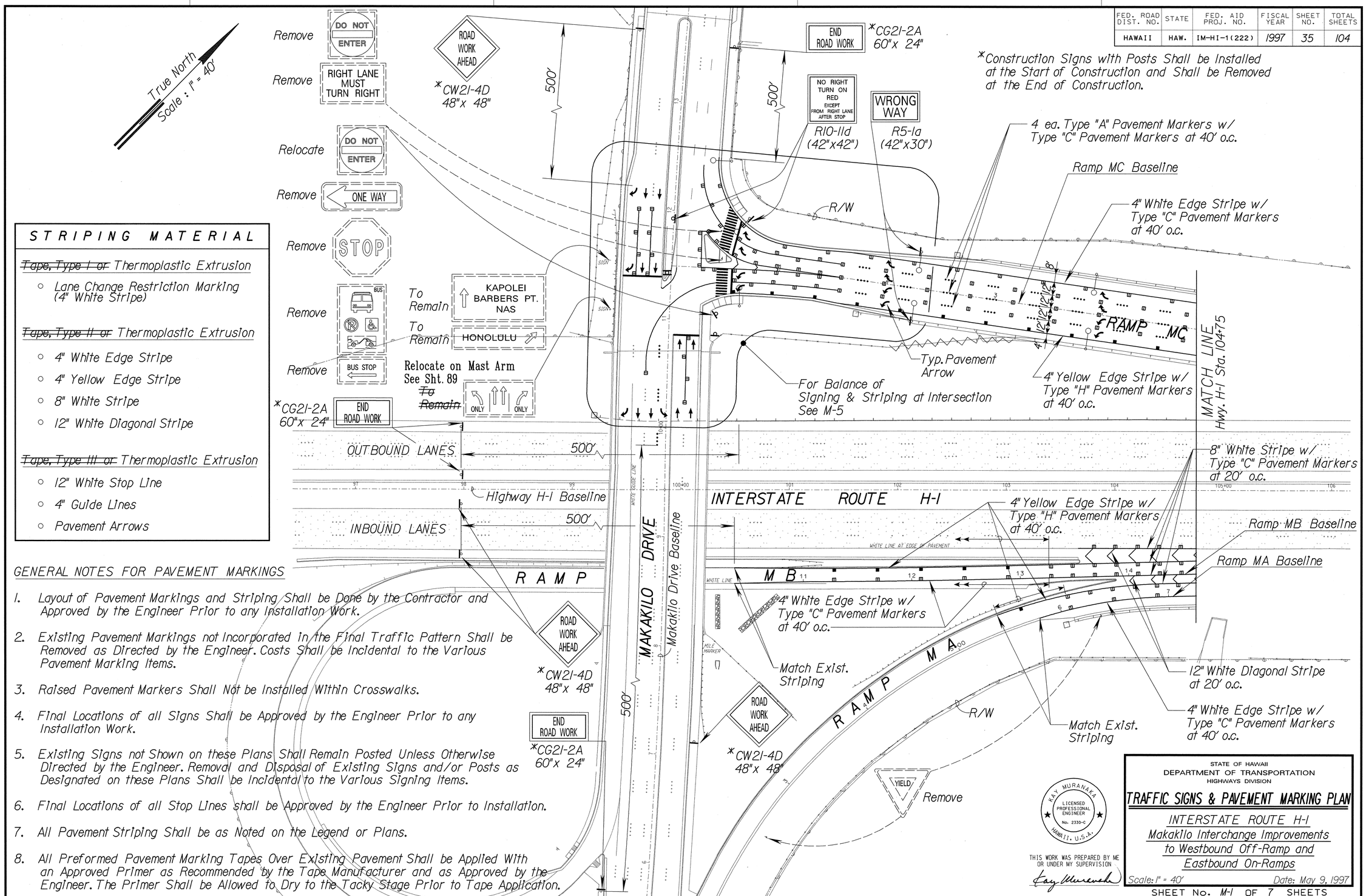

STRIPING MATERIAL

~~Tape, Type I or~~ Thermoplastic Extrusion

- Lane Change Restriction Marking (4" White Stripe)

~~Tape, Type II or~~ Thermoplastic Extrusion

- 4" White Edge Stripe
- 4" Yellow Edge Stripe
- 8" White Stripe
- 12" White Diagonal Stripe

~~Tape, Type III or~~ Thermoplastic Extrusion

- 12" White Stop Line
- 4" Guide Lines
- Pavement Arrows

GENERAL NOTES FOR PAVEMENT MARKINGS

1. Layout of Pavement Markings and Striping Shall be Done by the Contractor and Approved by the Engineer Prior to any Installation Work.
2. Existing Pavement Markings not Incorporated in the Final Traffic Pattern Shall be Removed as Directed by the Engineer. Costs Shall be Incidental to the Various Pavement Marking Items.
3. Raised Pavement Markers Shall Not be Installed Within Crosswalks.
4. Final Locations of all Signs Shall be Approved by the Engineer Prior to any Installation Work.
5. Existing Signs not Shown on these Plans Shall Remain Posted Unless Otherwise Directed by the Engineer. Removal and Disposal of Existing Signs and/or Posts as Designated on these Plans Shall be Incidental to the Various Signing Items.
6. Final Locations of all Stop Lines shall be Approved by the Engineer Prior to Installation.
7. All Pavement Striping Shall be as Noted on the Legend or Plans.
8. All Preformed Pavement Marking Tapes Over Existing Pavement Shall be Applied With an Approved Primer as Recommended by the Tape Manufacturer and as Approved by the Engineer. The Primer Shall be Allowed to Dry to the Tacky Stage Prior to Tape Application.

ORIGINAL PLAN	SURVEY PLOTTED BY	DATE
	DRAWN BY	
	TRACED BY	
NOTE BOOK	DESIGNED BY	
	QUANTITIES BY	
No.	CHECKED BY	

STATE OF HAWAII
DEPARTMENT OF TRANSPORTATION
HIGHWAYS DIVISION

TRAFFIC SIGNS & PAVEMENT MARKING PLAN

INTERSTATE ROUTE H-1
Makakilo Interchange Improvements to Westbound Off-Ramp and Eastbound On-Ramps

KAY MURANAKA LICENSED PROFESSIONAL ENGINEER No. 2330-C HAWAII, U.S.A.

THIS WORK WAS PREPARED BY ME OR UNDER MY SUPERVISION

Scale: 1" = 40' Date: May 9, 1997

SHEET No. M-1 OF 7 SHEETS

FED. ROAD DIST. NO.	STATE	FED. AID PROJ. NO.	FISCAL YEAR	SHEET NO.	TOTAL SHEETS
HAWAII	HAW.	IM-HI-1(222)	1997	36	104

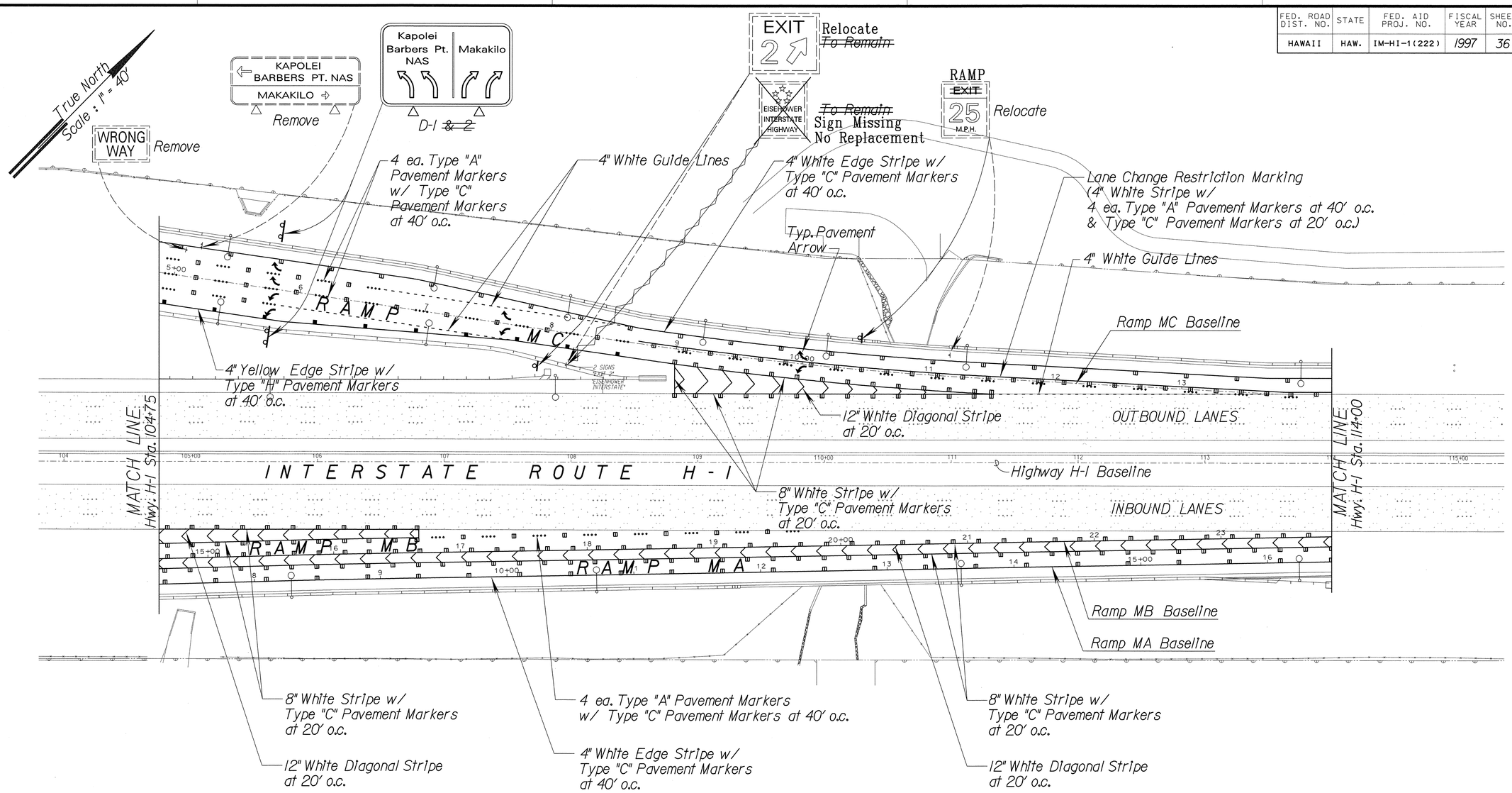

ORIGINAL PLAN	SURVEY PLOTTED BY	DATE
	DRAWN BY	
NOTE BOOK	TRACED BY	
	DESIGNED BY	
	QUANTITIES BY	
No.	CHECKED BY	

MAY MURANAKA
LICENSED PROFESSIONAL ENGINEER
No. 2330-C
HAWAII, U.S.A.

THIS WORK WAS PREPARED BY ME OR UNDER MY SUPERVISION

STATE OF HAWAII
DEPARTMENT OF TRANSPORTATION
HIGHWAYS DIVISION

TRAFFIC SIGNS & PAVEMENT MARKING PLAN

INTERSTATE ROUTE H-1
Makakilo Interchange Improvements to Westbound Off-Ramp and Eastbound On-Ramps

Scale: 1" = 40' Date: May 9, 1997

SHEET No. M-2 OF 7 SHEETS

FED. ROAD DIST. NO.	STATE	FED. AID PROJ. NO.	FISCAL YEAR	SHEET NO.	TOTAL SHEETS
HAWAII	HAW.	IM-HI-1(222)	1997	37	104

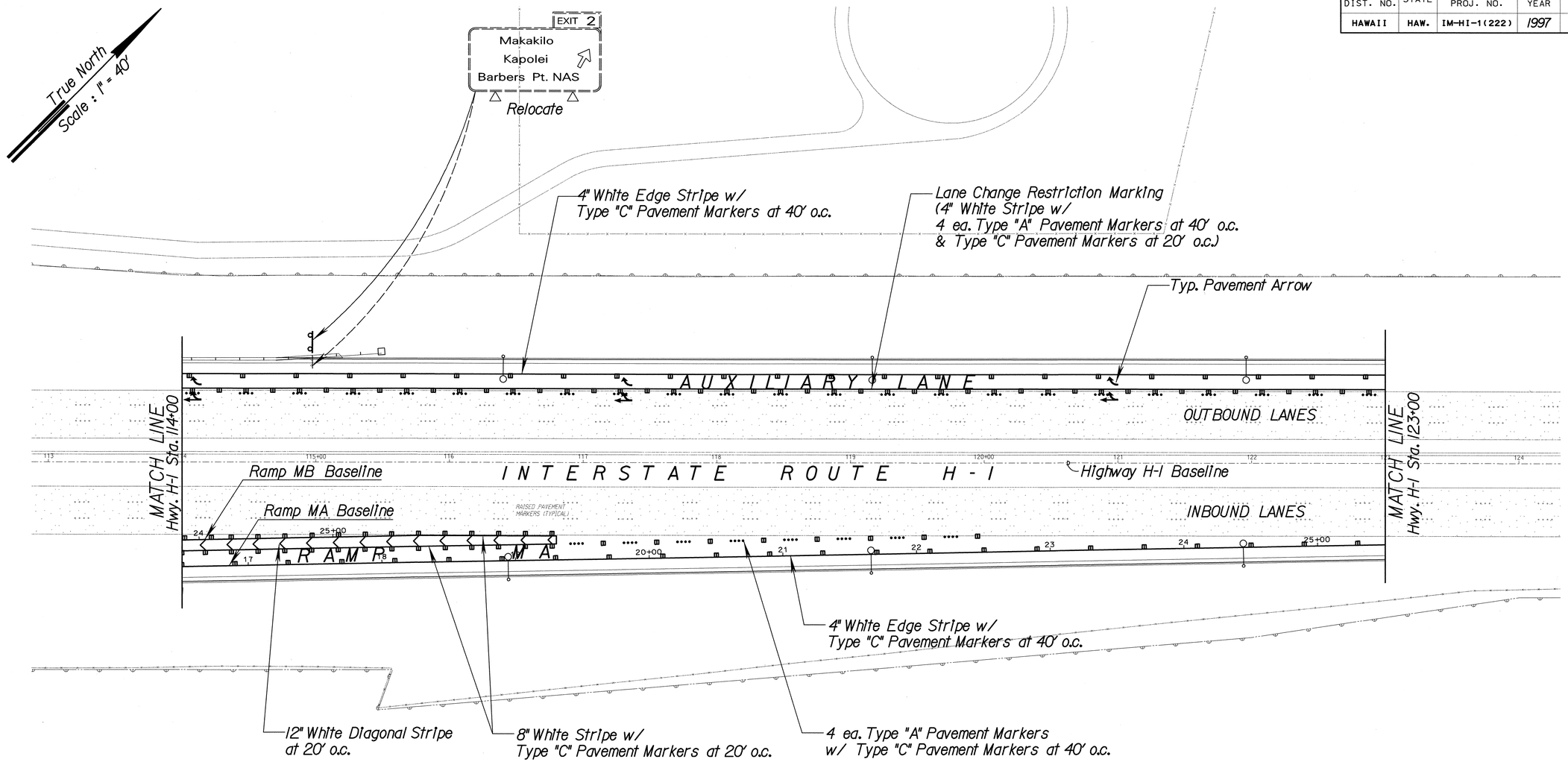

ORIGINAL PLAN	SURVEY PLOTTED BY	DATE
	DRAWN BY	
NOTE BOOK	TRACED BY	
	DESIGNED BY	
	QUANTITIES BY	
No.	CHECKED BY	

KAY MURANAKA
LICENSED PROFESSIONAL ENGINEER
No. 2330-C
HAWAII, U.S.A.

THIS WORK WAS PREPARED BY ME OR UNDER MY SUPERVISION

STATE OF HAWAII
DEPARTMENT OF TRANSPORTATION
HIGHWAYS DIVISION

TRAFFIC SIGNS & PAVEMENT MARKING PLAN

INTERSTATE ROUTE H-1
Makakilo Interchange Improvements to Westbound Off-Ramp and Eastbound On-Ramps

Scale: 1" = 40' Date: May 9, 1997

SHEET No. M-3 OF 7 SHEETS

FED. ROAD DIST. NO.	STATE	FED. AID PROJ. NO.	FISCAL YEAR	SHEET NO.	TOTAL SHEETS
HAWAII	HAW.	IM-HI-1(222)	1997	38	104

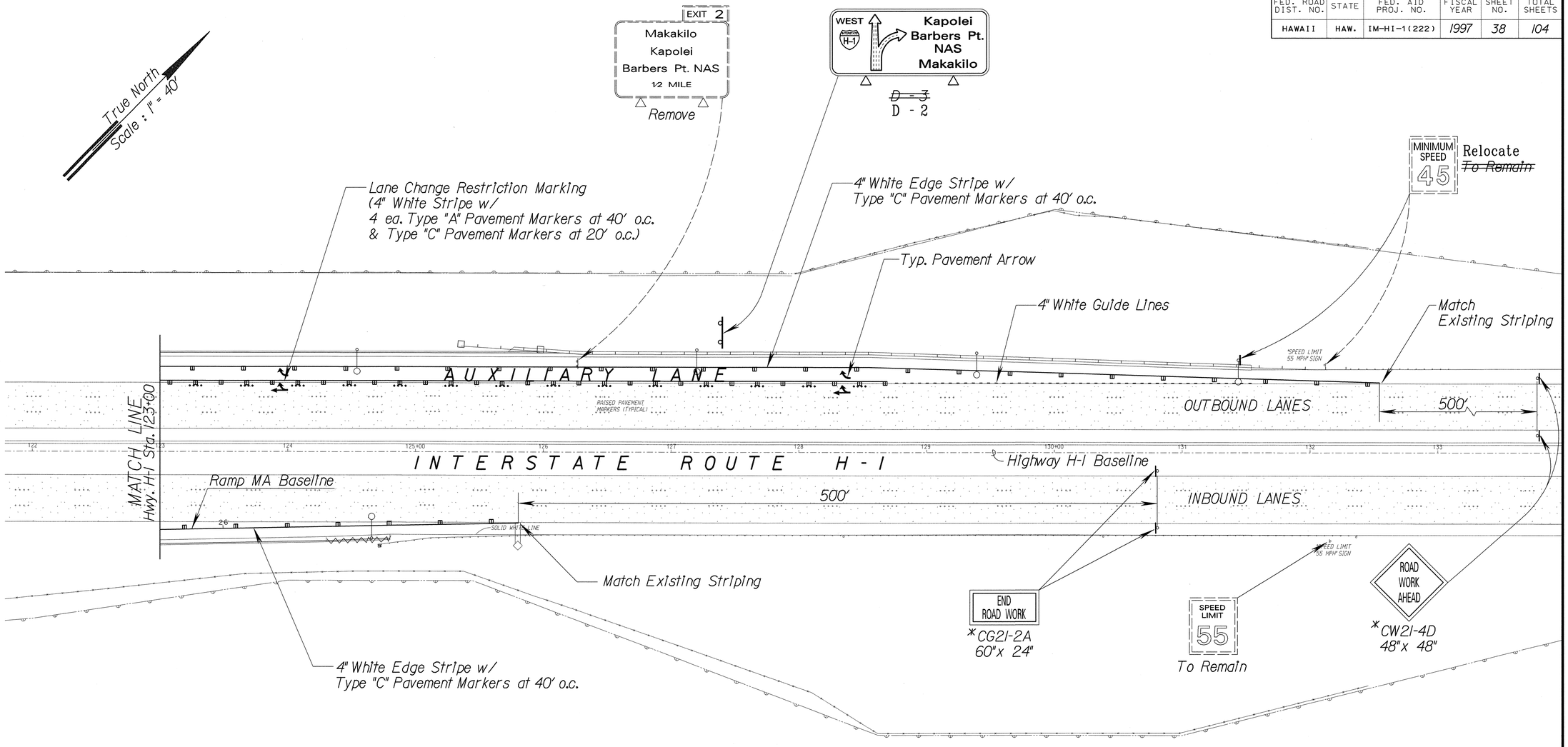

*Construction Signs with Posts Shall be Installed at the Start of Construction and Shall be Removed at the End of Construction.

ORIGINAL PLAN		DATE
	SURVEY PLOTTED BY	
	DRAWN BY	
	TRACED BY	
NOTE BOOK	DESIGNED BY	
	QUANTITIES BY	
No.	CHECKED BY	

KAY MURANAKA
LICENSED PROFESSIONAL ENGINEER
No. 2330-C
HAWAII, U.S.A.

THIS WORK WAS PREPARED BY ME OR UNDER MY SUPERVISION

STATE OF HAWAII
DEPARTMENT OF TRANSPORTATION
HIGHWAYS DIVISION

TRAFFIC SIGNS & PAVEMENT MARKING PLAN

INTERSTATE ROUTE H-1
Makakilo Interchange Improvements to Westbound Off-Ramp and Eastbound On-Ramps

Scale: 1" = 40' Date: May 9, 1997

SHEET No. M-4 OF 7 SHEETS

FED. ROAD DIST. NO.	STATE	FED. AID PROJ. NO.	FISCAL YEAR	SHEET NO.	TOTAL SHEETS
HAWAII	HAW.	IM-HI-1(222)	1997	39	104

M:\DGN\KAPOLEI\MAKAKILO\STRPE-05.DGN

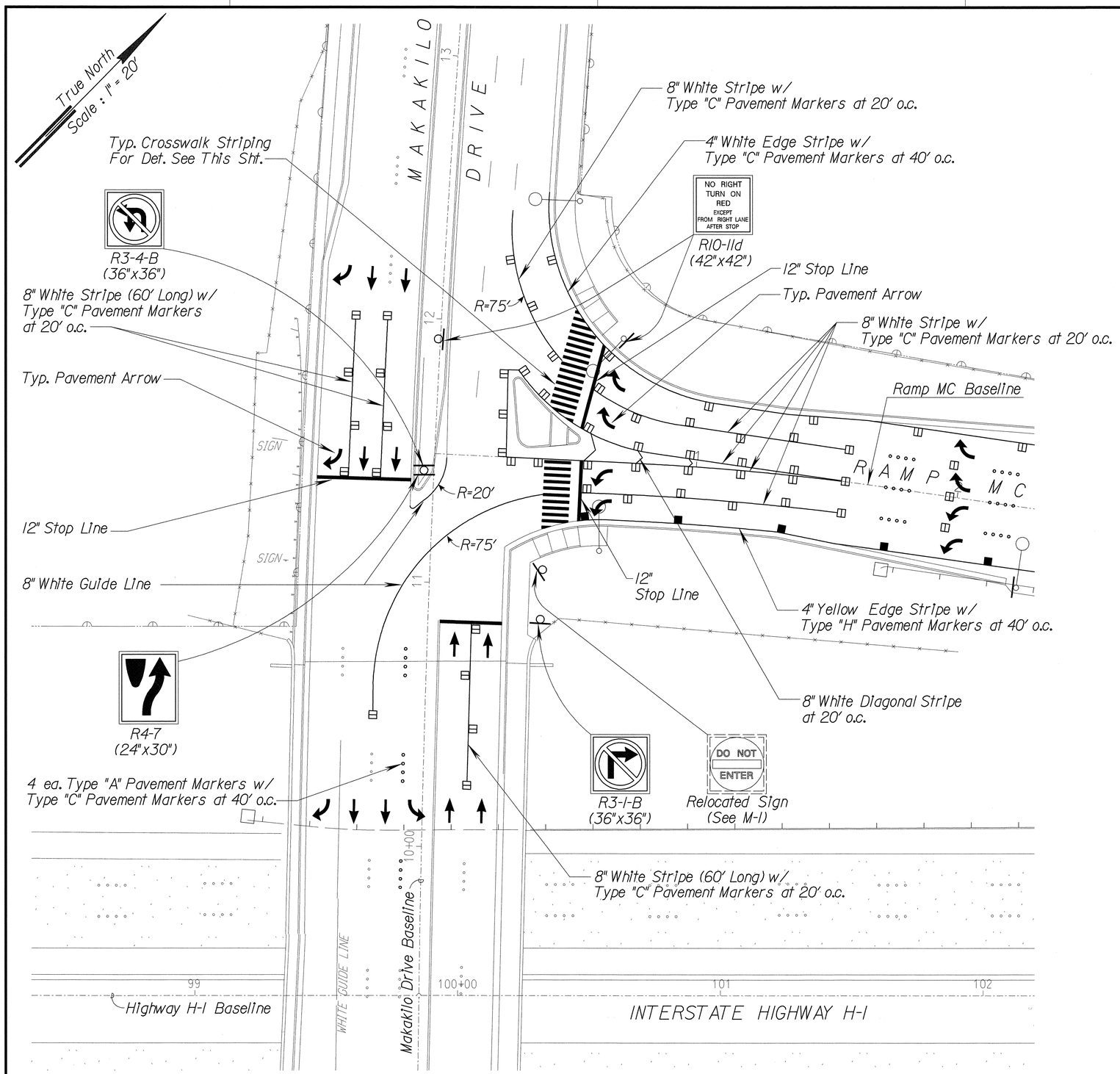

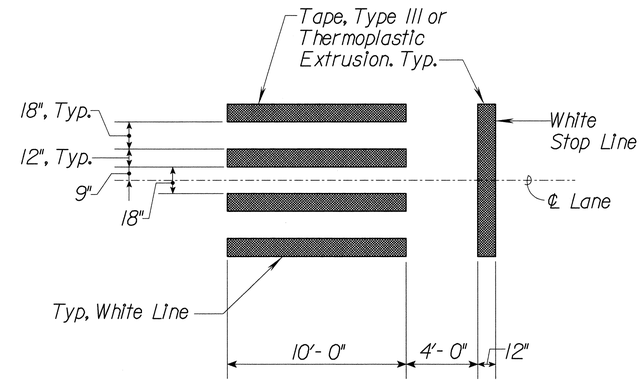

CROSSWALK STRIPING

No Scale

ORIGINAL PLAN	SURVEY PLOTTED BY	DATE
	DRAWN BY	
	TRACED BY	
NOTE BOOK	DESIGNED BY	
	QUANTITIES BY	
No.	CHECKED BY	

KAY MURANAKA LICENSED PROFESSIONAL ENGINEER No. 2330-C HAWAII, U.S.A.

THIS WORK WAS PREPARED BY ME OR UNDER MY SUPERVISION

Kay Muranaka

STATE OF HAWAII
DEPARTMENT OF TRANSPORTATION
HIGHWAYS DIVISION

TRAFFIC SIGNS & PAVEMENT MARKING PLAN

INTERSTATE ROUTE H-1
Makakilo Interchange Improvements to Westbound Off-Ramp and Eastbound On-Ramps

Scale: 1" = 20' Date: May 9, 1997

SHEET No. M-5 OF 7 SHEETS

FED. ROAD DIST. NO.	STATE	FED. AID PROJ. NO.	FISCAL YEAR	SHEET NO.	TOTAL SHEETS
HAWAII	HAW.	IM-HI-1(222)	1997	40	104

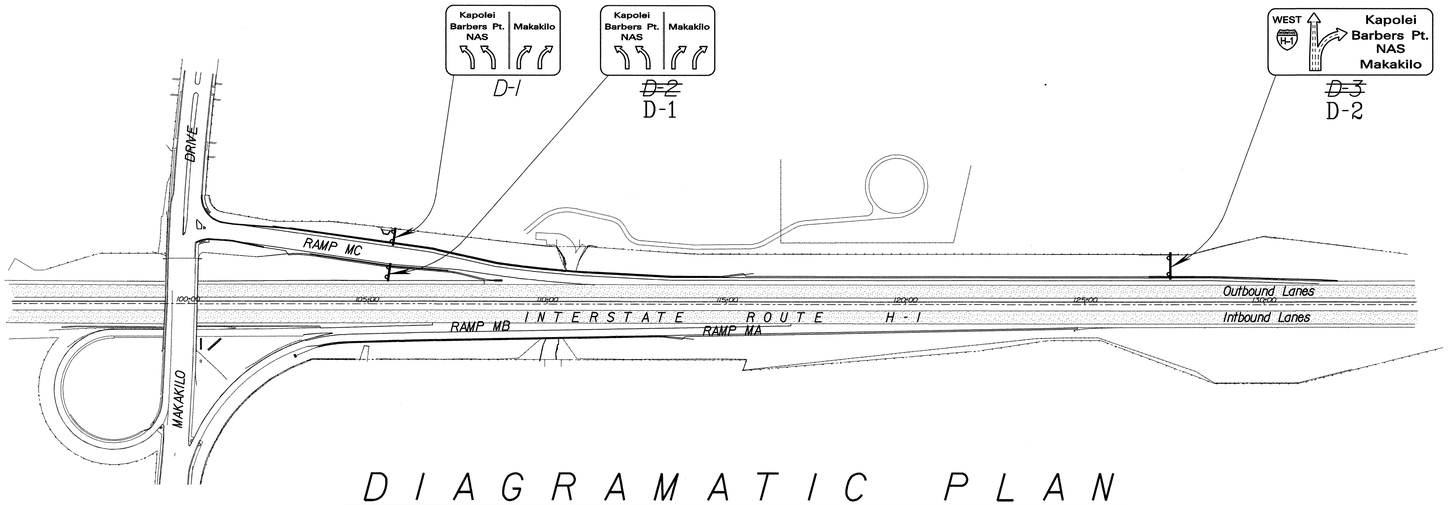

DIAGRAMATIC PLAN

Scale : 1" = 200'

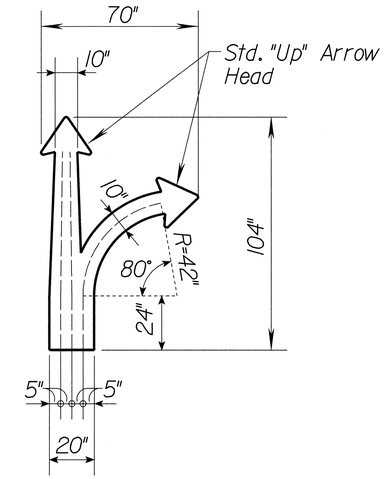

LANE ARROW

Scale : 3/8" = 1'- 0"

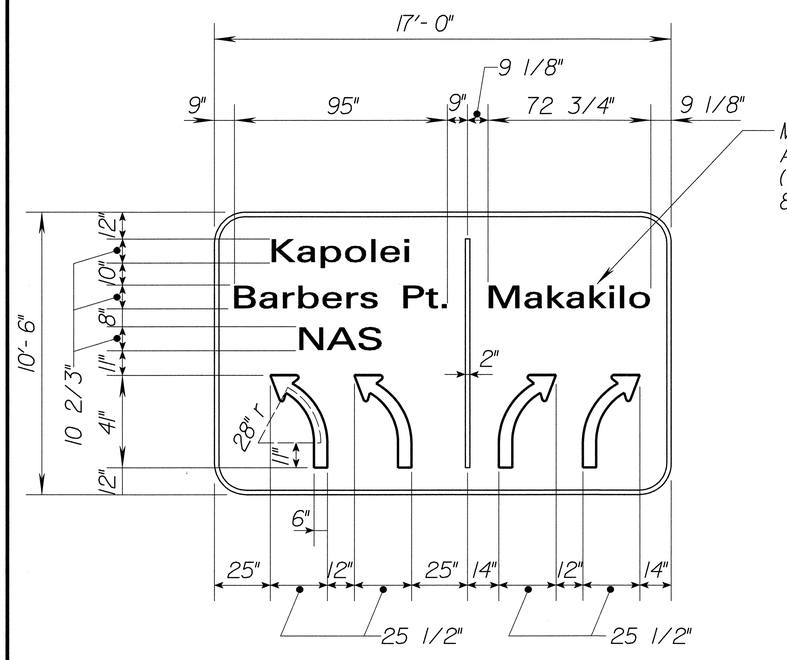

D - 1 ~~& 2~~

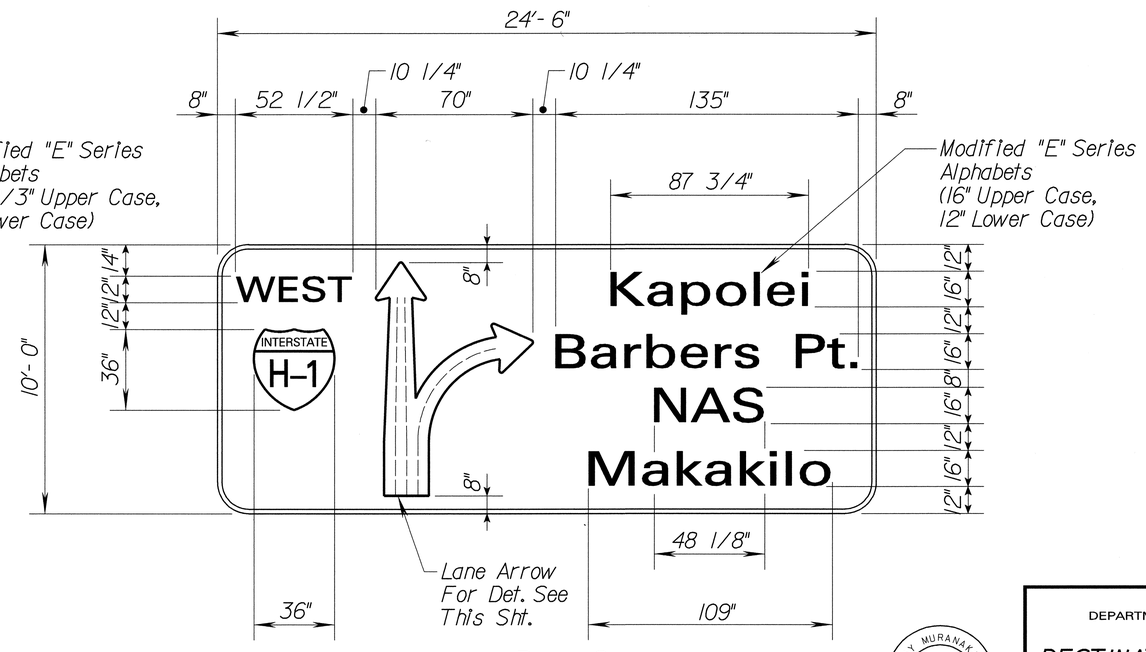

D - 2

~~D - 3~~

PANEL LAYOUT

Scale : 3/8" = 1'- 0"

ORIGINAL PLAN	SURVEY PLOTTED BY	DATE
	DRAWN BY	
	TRACED BY	
NOTE BOOK	DESIGNED BY	
	QUANTITIES BY	
No.	CHECKED BY	

KAY MURANAKA
LICENSED PROFESSIONAL ENGINEER
No. 2330-C
HAWAII, U.S.A.

THIS WORK WAS PREPARED BY ME OR UNDER MY SUPERVISION

STATE OF HAWAII
DEPARTMENT OF TRANSPORTATION
HIGHWAYS DIVISION

DESTINATION SIGN DETAILS

INTERSTATE ROUTE H-1
Makakilo Interchange Improvements to Westbound Off-Ramp and Eastbound On-Ramps

Scale: As Shown — Date: May 9, 1997

SHEET No. M-6 OF 7 SHEETS

FED. ROAD DIST. NO.	STATE	FED. AID PROJ. NO.	FISCAL YEAR	SHEET NO.	TOTAL SHEETS
HAWAII	HAW.	IM-HI-1(222)	1997	41	104

M:\DGN\KAPOLEI\MARKKILOY\DET-02.DGN

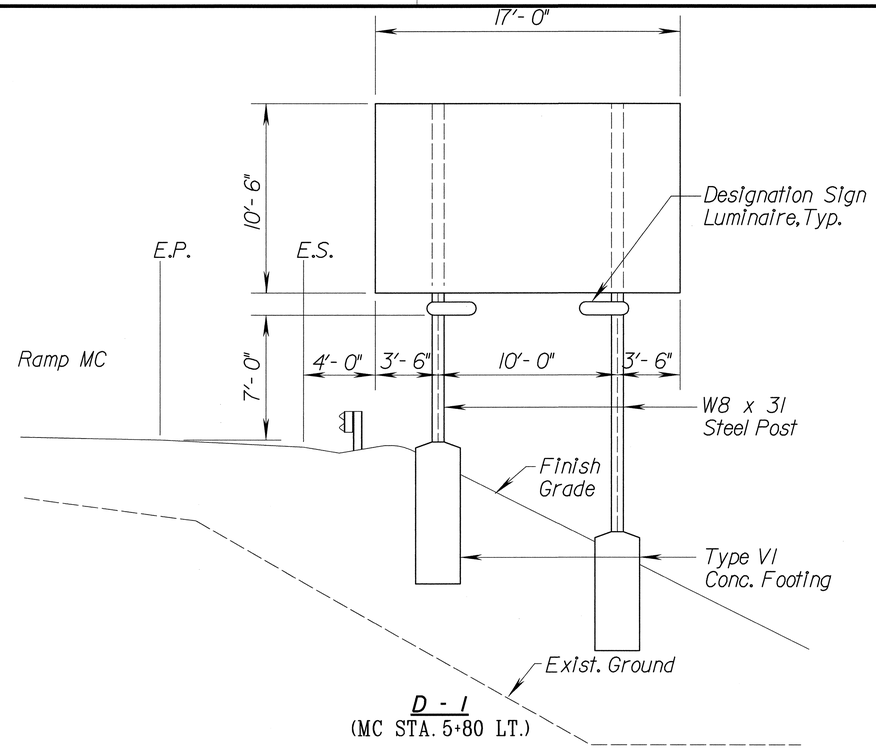

D - 1
(MC STA. 5+80 LT.)

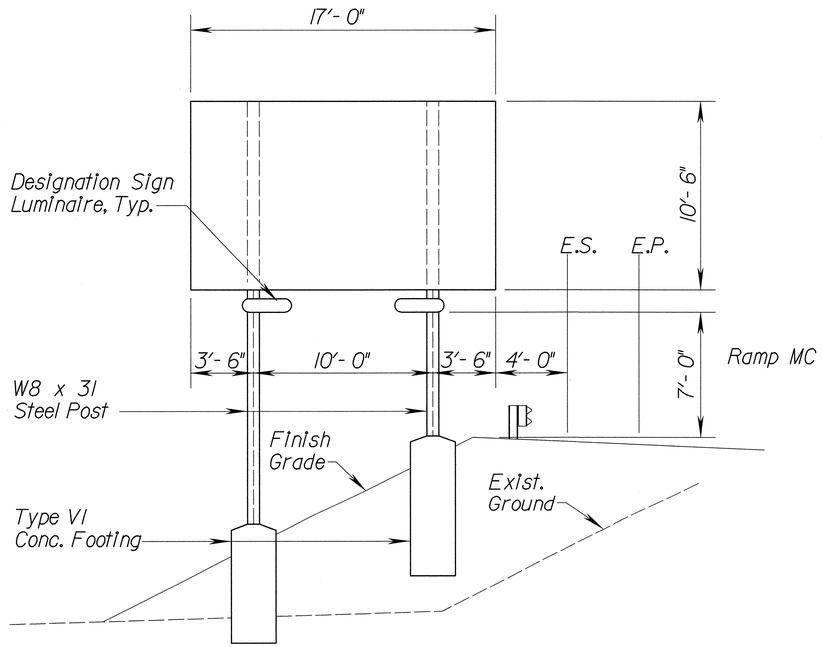

D - 1
~~D - 2~~
(MC STA. 5+80 RT.)

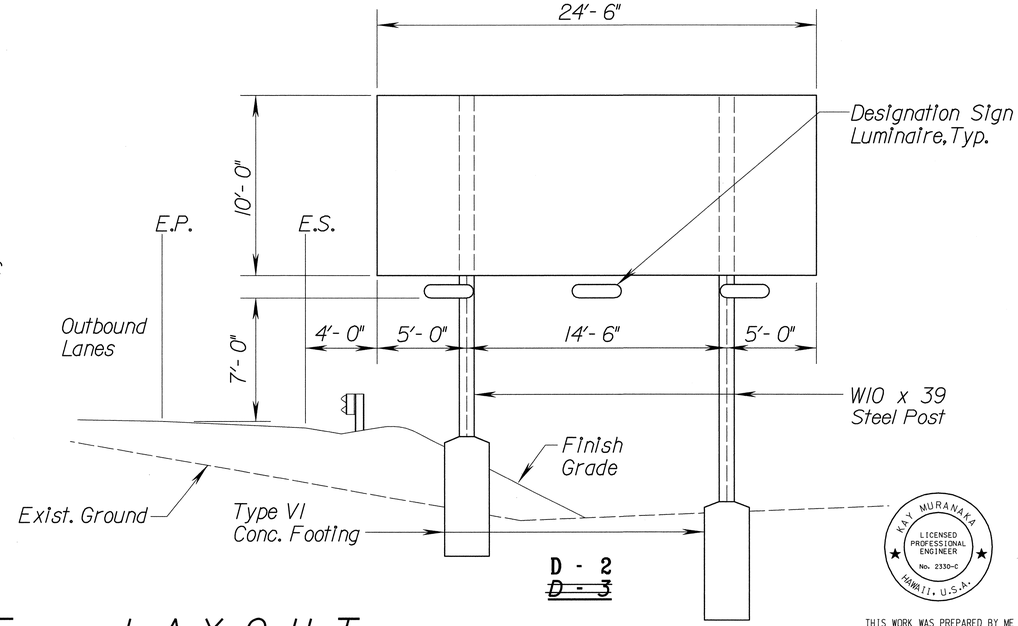

D - 2
~~D - 3~~

F R A M E L A Y O U T

Scale : 1/4" = 1'- 0"

ORIGINAL PLAN	SURVEY PLOTTED BY	DATE
	DRAWN BY	
	TRACED BY	
NOTE BOOK	DESIGNED BY	
	QUANTITIES BY	
No.	CHECKED BY	

KAY MURANAKA LICENSED PROFESSIONAL ENGINEER No. 2330-C HAWAII, U.S.A.

THIS WORK WAS PREPARED BY ME OR UNDER MY SUPERVISION

STATE OF HAWAII
DEPARTMENT OF TRANSPORTATION
HIGHWAYS DIVISION

DESTINATION SIGN FRAME LAYOUT

INTERSTATE ROUTE H-1
Makakilo Interchange Improvements to Westbound Off-Ramp and Eastbound On-Ramps

Scale: 1/4" = 1'- 0" Date: May 9, 1997

SHEET No. M-7 OF 7 SHEETS

M:\DGN\KAPOLEI\MAKAKILO\TCP-01.DGN

FED. ROAD DIST. NO.	STATE	FED. AID PROJ. NO.	FISCAL YEAR	SHEET NO.	TOTAL SHEETS
HAWAII	HAW.	IM-HI-1(222)	1997	42	104

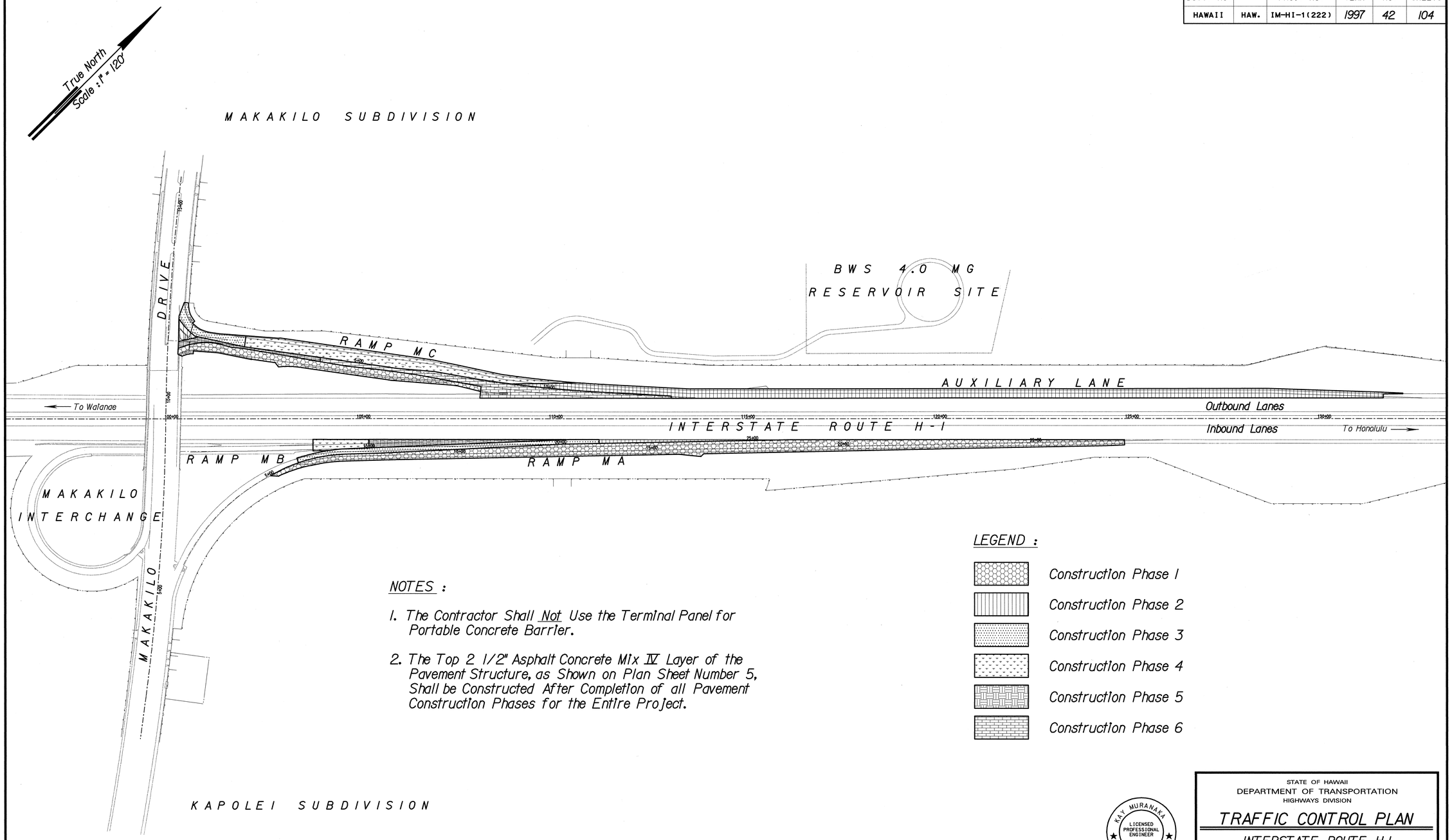

NOTES :

1. The Contractor Shall Not Use the Terminal Panel for Portable Concrete Barrier.
2. The Top 2 1/2" Asphalt Concrete Mix IV Layer of the Pavement Structure, as Shown on Plan Sheet Number 5, Shall be Constructed After Completion of all Pavement Construction Phases for the Entire Project.

LEGEND :

- Construction Phase 1
- Construction Phase 2
- Construction Phase 3
- Construction Phase 4
- Construction Phase 5
- Construction Phase 6

CONSTRUCTION PHASING PLAN

Scale : 1" = 120'

ORIGINAL PLAN	SURVEY PLOTTED BY	DATE
	DRAWN BY	
	TRACED BY	
NOTE BOOK	DESIGNED BY	
	QUANTITIES BY	
No.	CHECKED BY	

KAY MURANAKA
LICENSED PROFESSIONAL ENGINEER
No. 2330-C
HAWAII, U.S.A.

THIS WORK WAS PREPARED BY ME OR UNDER MY SUPERVISION

Kay Muranaka

STATE OF HAWAII
DEPARTMENT OF TRANSPORTATION
HIGHWAYS DIVISION

TRAFFIC CONTROL PLAN

INTERSTATE ROUTE H-1
Makakilo Interchange Improvements to Westbound Off-Ramp and Eastbound On-Ramps

Scale: 1" = 120' Date: May 9, 1997

SHEET No. F-1 OF 8 SHEETS

FED. ROAD DIST. NO.	STATE	FED. AID PROJ. NO.	FISCAL YEAR	SHEET NO.	TOTAL SHEETS
HAWAII	HAW.	IM-HI-1(222)	1997	43	104

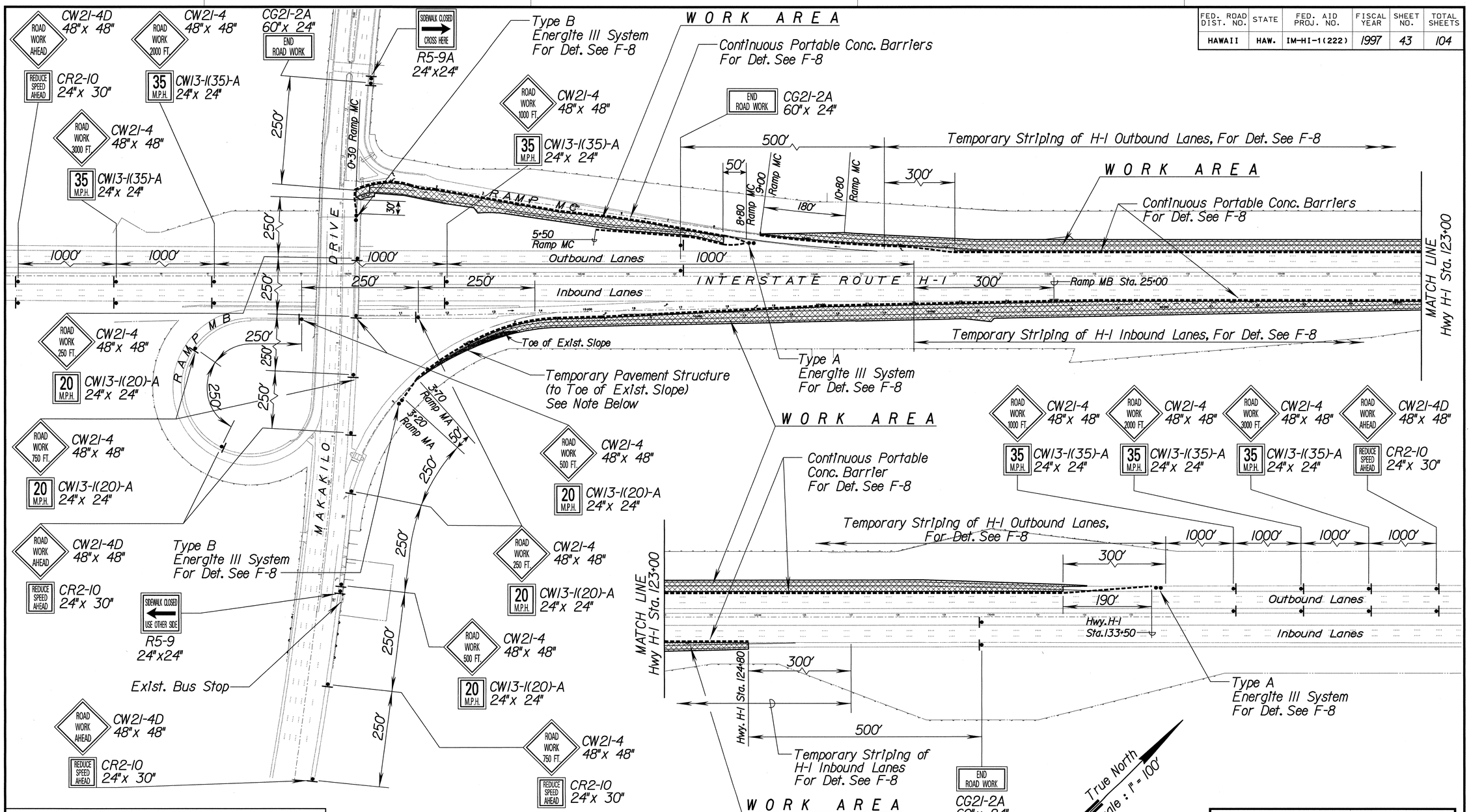

ESTIMATED QUANTITIES

NO.	ITEM	QTY.	UNIT
1	Portable Concrete Barrier	305	Each
2	Cone or Delineator	0	L.F.
3	Type A Energite System	1	Each
4	Type B Energite System	2	Each
5	Traffic Control Sign	63	Each
6	Striping	17,700	L.F.

Note :
Remove Existing GRP, Anchor Block & Guardrail, Provide Temporary Pavement Structure (For Detail See C-2). At End Of Construction Phase 3, Remove Temporary Pavement Structure and Restore GRP, Anchor Block, Guardrail and Grassing to Original Condition.

CONSTRUCTION PHASE 1

Scale : 1" = 100'

SURVEY PLOTTED BY
DRAWN BY
TRACED BY
DESIGNED BY
QUANTITIES BY
CHECKED BY
DATE
ORIGINAL PLAN
NOTE BOOK No.

KAY MURANAKA LICENSED PROFESSIONAL ENGINEER No. 2330-C HAWAII, U.S.A.

THIS WORK WAS PREPARED BY ME OR UNDER MY SUPERVISION

STATE OF HAWAII
DEPARTMENT OF TRANSPORTATION
HIGHWAYS DIVISION

TRAFFIC CONTROL PLAN

INTERSTATE ROUTE H-1
Makakilo Interchange Improvements to Westbound Off-Ramp and Eastbound On-Ramps

Scale: 1" = 100' Date: May 9, 1997

SHEET No. F-2 OF 8 SHEETS

FED. ROAD DIST. NO.	STATE	FED. AID PROJ. NO.	FISCAL YEAR	SHEET NO.	TOTAL SHEETS
HAWAII	HAW.	IM-HI-1(222)	1997	44	104

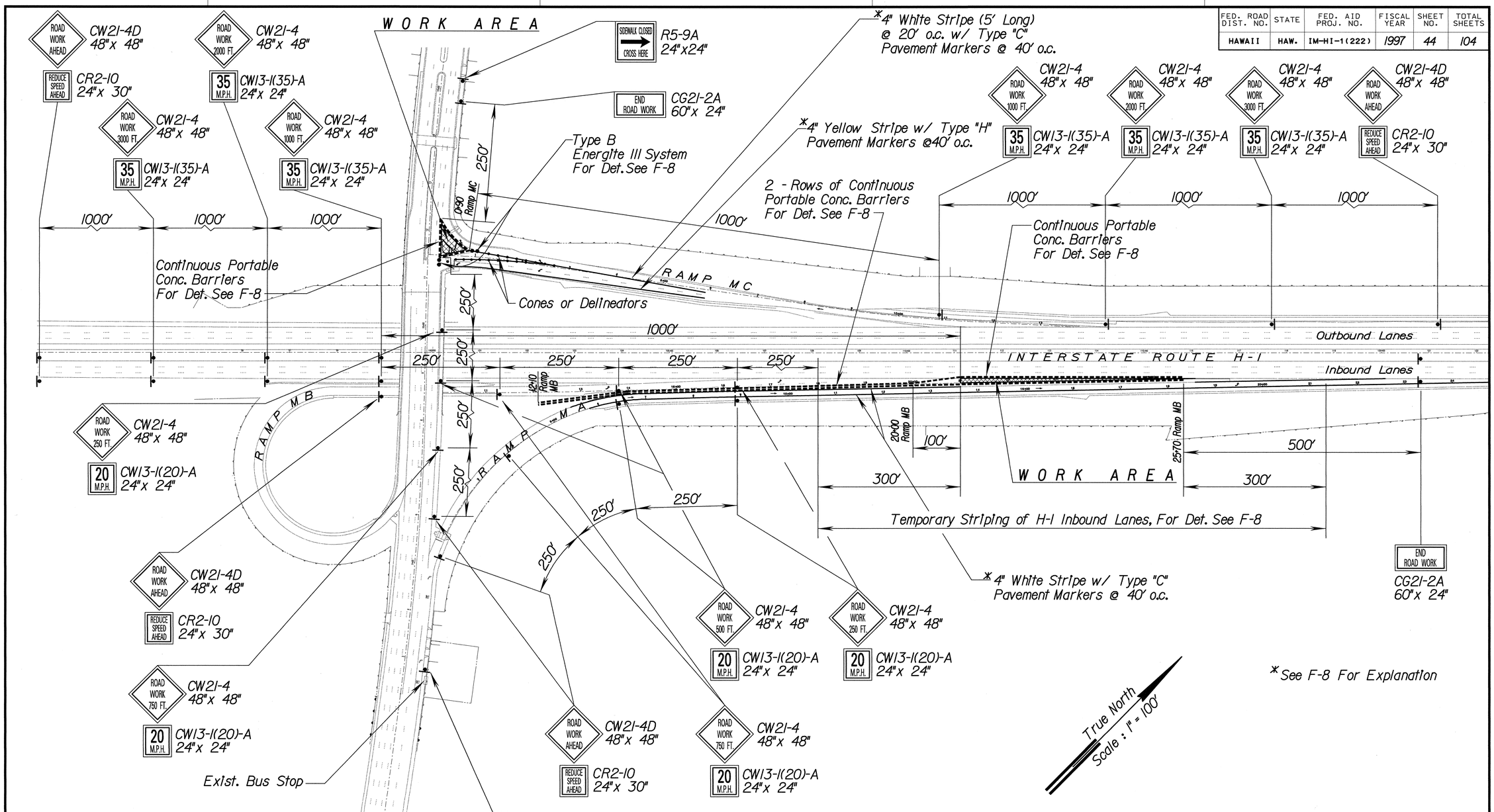

*See F-8 For Explanation

ESTIMATED QUANTITIES

NO.	ITEM	QTY.	UNIT
1	Portable Concrete Barrier	148	Each
2	Cone or Delineator	430	L.F.
3	Type A Energite System	0	Each
4	Type B Energite System	2	Each
5	Traffic Control Sign	53	Each
6	Striping	9300	L.F.

CONSTRUCTION PHASE 2

Scale : 1" = 100'

ORIGINAL PLAN | SURVEY PLOTTED BY | DRAWN BY | TRACED BY | DESIGNED BY | QUANTITIES BY | CHECKED BY | DATE | NOTE BOOK No.

KAY MURANAKA LICENSED PROFESSIONAL ENGINEER No. 2330-C HAWAII, U.S.A.

THIS WORK WAS PREPARED BY ME OR UNDER MY SUPERVISION

Kay Muranaka

STATE OF HAWAII
DEPARTMENT OF TRANSPORTATION
HIGHWAYS DIVISION

TRAFFIC CONTROL PLAN

INTERSTATE ROUTE H-1
Makakilo Interchange Improvements to Westbound Off-Ramp and Eastbound On-Ramps

Scale: 1" = 100' Date: May 9, 1997

SHEET No. F-3 OF 8 SHEETS

FED. ROAD DIST. NO.	STATE	FED. AID PROJ. NO.	FISCAL YEAR	SHEET NO.	TOTAL SHEETS
HAWAII	HAW.	IM-HI-1(222)	1997	45	104

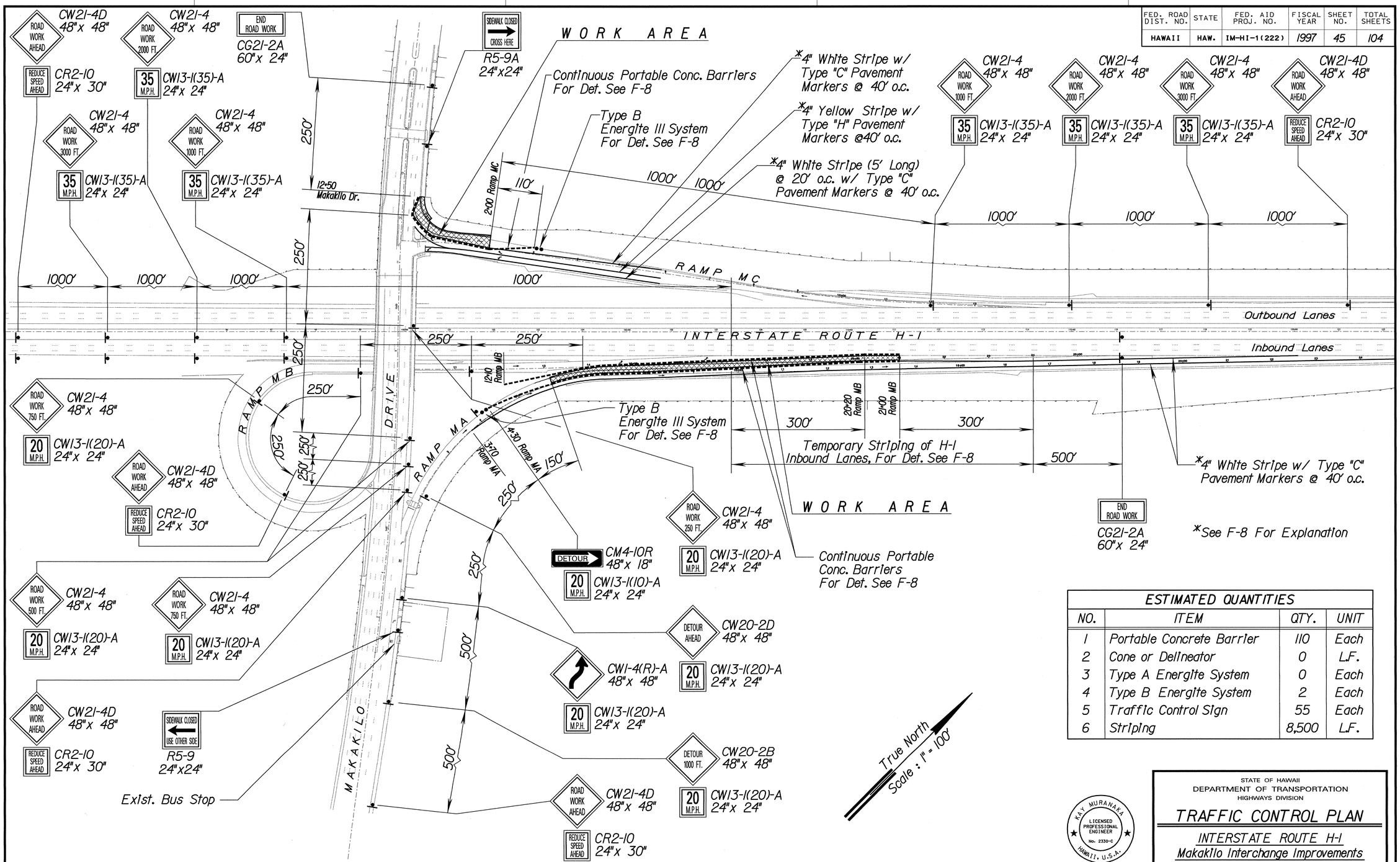

CONSTRUCTION PHASE 3

Scale : 1" = 100'

ESTIMATED QUANTITIES

NO.	ITEM	QTY.	UNIT
1	Portable Concrete Barrier	110	Each
2	Cone or Delineator	0	L.F.
3	Type A Energite System	0	Each
4	Type B Energite System	2	Each
5	Traffic Control Sign	55	Each
6	Striping	8,500	L.F.

KAY MURANAKA LICENSED PROFESSIONAL ENGINEER No. 2330-C HAWAII, U.S.A.

THIS WORK WAS PREPARED BY ME OR UNDER MY SUPERVISION

Kay Muranaka

STATE OF HAWAII
DEPARTMENT OF TRANSPORTATION
HIGHWAYS DIVISION

TRAFFIC CONTROL PLAN

INTERSTATE ROUTE H-1
Makakilo Interchange Improvements to Westbound Off-Ramp and Eastbound On-Ramps

Scale: 1" = 100' Date: May 9, 1997

SHEET No. F-4 OF 8 SHEETS

ORIGINAL PLAN | SURVEY PLOTTED BY | DRAWN BY | TRACED BY | DESIGNED BY | QUANTITIES BY | CHECKED BY | DATE | NOTE BOOK No.

FED. ROAD DIST. NO.	STATE	FED. AID PROJ. NO.	FISCAL YEAR	SHEET NO.	TOTAL SHEETS
HAWAII	HAW.	IM-HI-1(222)	1997	46	104

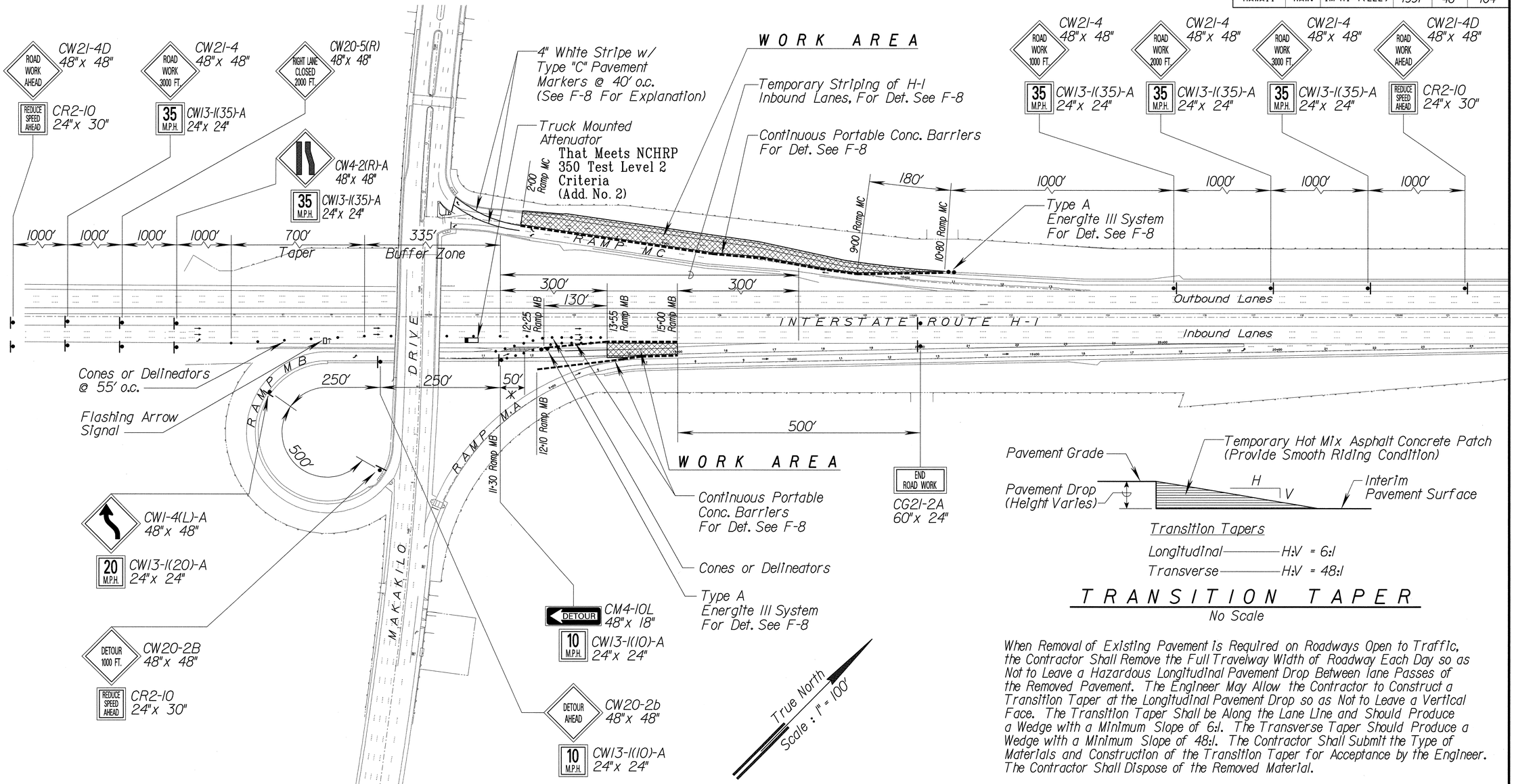

Transition Tapers

Longitudinal ——— H:V = 6:1

Transverse ——— H:V = 48:1

TRANSITION TAPER

No Scale

When Removal of Existing Pavement Is Required on Roadways Open to Traffic, the Contractor Shall Remove the Full Travelway Width of Roadway Each Day so as Not to Leave a Hazardous Longitudinal Pavement Drop Between Lane Passes of the Removed Pavement. The Engineer May Allow the Contractor to Construct a Transition Taper at the Longitudinal Pavement Drop so as Not to Leave a Vertical Face. The Transition Taper Shall be Along the Lane Line and Should Produce a Wedge with a Minimum Slope of 6:1. The Transverse Taper Should Produce a Wedge with a Minimum Slope of 48:1. The Contractor Shall Submit the Type of Materials and Construction of the Transition Taper for Acceptance by the Engineer. The Contractor Shall Dispose of the Removed Material.

* Remove Existing Guardrails and Concrete Curbs, Provide Temporary Pavement Structure (For Detail See C-2). At End of Construction Phase, Remove Temporary Pavement Structure And Restore Concrete Curb, Guardrail and Grassing to Original Condition. The Temporary Detour Through the Curb Island Shall be Coned-Off During Non-Construction Hours.

CONSTRUCTION PHASE 4

Scale : 1" = 100'

ESTIMATED QUANTITIES

NO.	ITEM	QTY.	UNIT
1	Portable Concrete Barrier	73	Each
2	Cone or Delineator	1,500	L.F.
3	Type A Energite System	2	Each
4	Type B Energite System	0	Each
5	Traffic Control Sign	34	Each
6	Striping	4,000	L.F.

ORIGINAL PLAN | SURVEY PLOTTED BY | DRAWN BY | TRACED BY | DESIGNED BY | QUANTITIES BY | CHECKED BY | NOTE BOOK | No. | DATE

KAY MURANAKA LICENSED PROFESSIONAL ENGINEER No. 2330-C HAWAII, U.S.A.

THIS WORK WAS PREPARED BY ME OR UNDER MY SUPERVISION

STATE OF HAWAII
DEPARTMENT OF TRANSPORTATION
HIGHWAYS DIVISION

TRAFFIC CONTROL PLAN

INTERSTATE ROUTE H-1
Makakilo Interchange Improvements to Westbound Off-Ramp and Eastbound On-Ramps

Scale: 1" = 100' Date: May 9, 1997

SHEET No. F-5 OF 8 SHEETS

FED. ROAD DIST. NO.	STATE	FED. AID PROJ. NO.	FISCAL YEAR	SHEET NO.	TOTAL SHEETS
HAWAII	HAW.	IM-HI-1(222)	1997	47	104

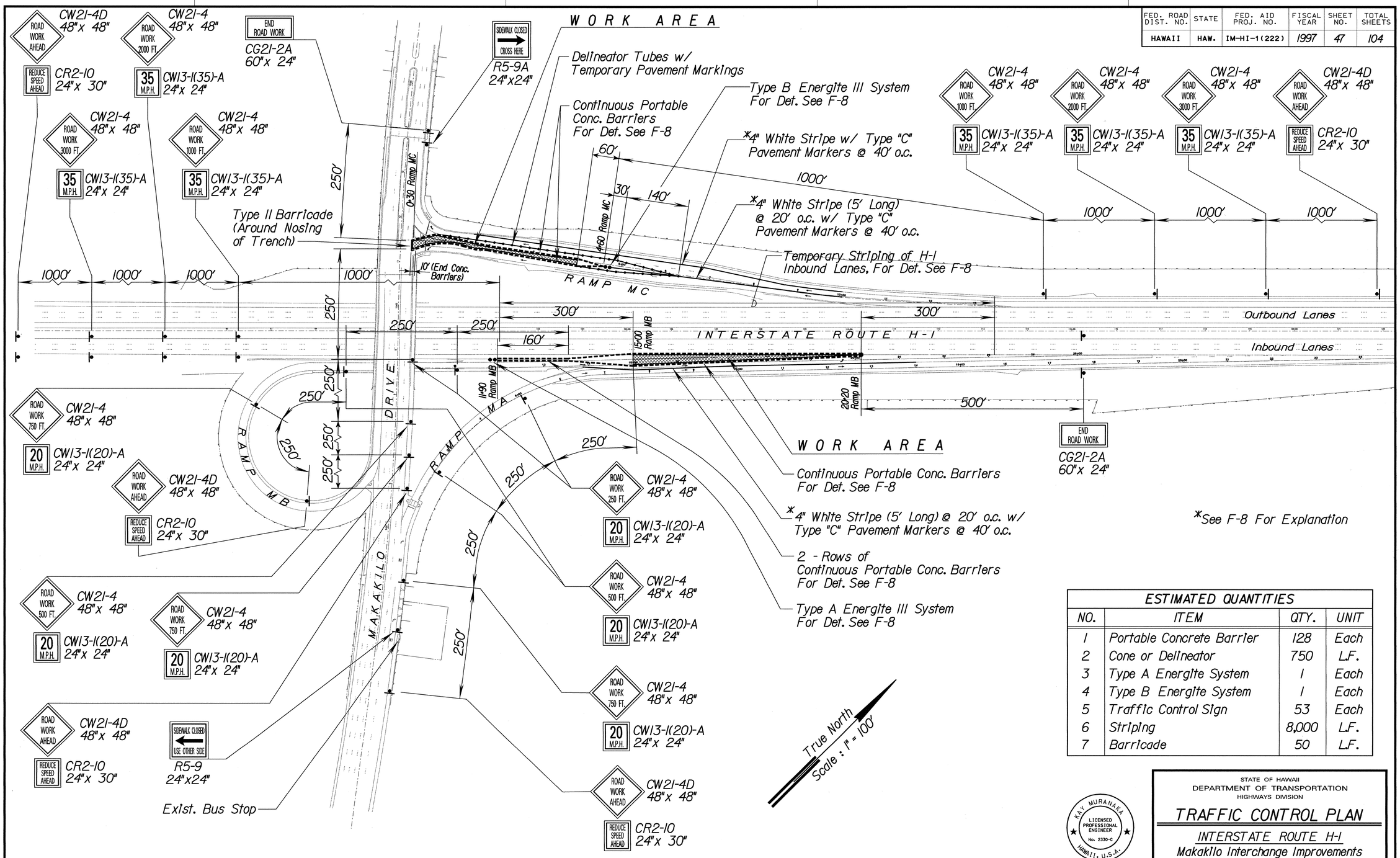

CONSTRUCTION PHASE 5

Scale : 1" = 100'

ESTIMATED QUANTITIES			
NO.	ITEM	QTY.	UNIT
1	Portable Concrete Barrier	128	Each
2	Cone or Delineator	750	L.F.
3	Type A Energite System	1	Each
4	Type B Energite System	1	Each
5	Traffic Control Sign	53	Each
6	Striping	8,000	L.F.
7	Barricade	50	L.F.

KAY MURANAKA LICENSED PROFESSIONAL ENGINEER No. 2330-C HAWAII, U.S.A.

THIS WORK WAS PREPARED BY ME OR UNDER MY SUPERVISION

STATE OF HAWAII
DEPARTMENT OF TRANSPORTATION
HIGHWAYS DIVISION

TRAFFIC CONTROL PLAN

INTERSTATE ROUTE H-1
Makakilo Interchange Improvements to Westbound Off-Ramp and Eastbound On-Ramps

Scale: 1" = 100' Date: May 9, 1997

SHEET No. F-6 OF 8 SHEETS

ORIGINAL PLAN | SURVEY PLOTTED BY | DRAWN BY | TRACED BY | DESIGNED BY | QUANTITIES BY | CHECKED BY | DATE | NOTE BOOK No.

FED. ROAD DIST. NO.	STATE	FED. AID PROJ. NO.	FISCAL YEAR	SHEET NO.	TOTAL SHEETS
HAWAII	HAW.	IM-HI-1(222)	1997	48	104

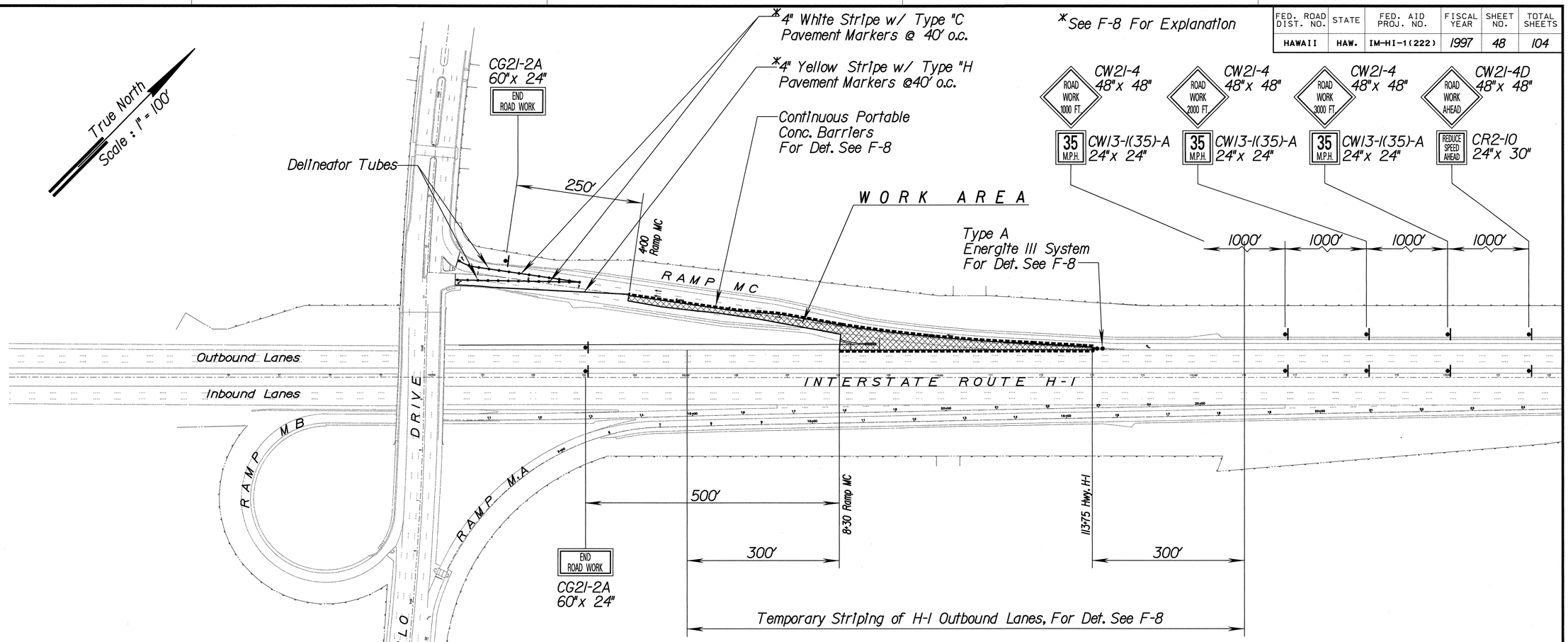

ESTIMATED QUANTITIES			
NO.	ITEM	QTY.	UNIT
1	Portable Concrete Barrier	73	Each
2	Cone or Delineator	500	L.F.
3	Type A Energite System	1	Each
4	Type B Energite System	0	Each
5	Traffic Control Sign	19	Each
6	Striping	5,600	L.F.

ORIGINAL PLAN | SURVEY PLOTTED BY | DRAWN BY | TRACED BY | DESIGNED BY | QUANTITIES BY | CHECKED BY | DATE | NOTE BOOK No.

CONSTRUCTION PHASE 6

Scale : 1" = 100'

KAY MURAHAKA LICENSED PROFESSIONAL ENGINEER No. 2330-C HAWAII, U.S.A.

THIS WORK WAS PREPARED BY ME OR UNDER MY SUPERVISION

STATE OF HAWAII
DEPARTMENT OF TRANSPORTATION
HIGHWAYS DIVISION

TRAFFIC CONTROL PLAN

INTERSTATE ROUTE H-1
Makakilo Interchange Improvements to Westbound Off-Ramp and Eastbound On-Ramps

Scale: 1" = 100' Date: May 9, 1997

SHEET No. F-7 OF 8 SHEETS

FED. ROAD DIST. NO.	STATE	FED. AID PROJ. NO.	FISCAL YEAR	SHEET NO.	TOTAL SHEETS
HAWAII	HAW.	IM-HI-1(222)	1997	49	104

GENERAL NOTES FOR TRAFFIC CONTROL PLAN

1. The Permittee Shall Make Minor Adjustments at Intersections, Driveways, Bridges, Structures, Etc., to Fit Field Conditions.
2. Cones or Delineators Shall be Extended to a Point Where They are Visible to Approaching Traffic.
3. Traffic Control Devices Shall be Installed Such That the Sign or Device Farthest From the Work Area Shall be Placed First. The Others Shall Then be Placed Progressively Toward the Work Area.
4. Regulatory and Warning Signs Within the Construction Zone that are in Conflict with the Traffic Control Plans Shall be Removed or Covered. All Signs Shall be Restored Upon Completion of the Work.
5. Flaggers and/or Police officers Shall be in Sight of Each Other or in Direct Communication at all Times.
6. When Required by the Issuing Officer, the Permittee Shall Install a Flashing Arrow Signal as Shown on the Traffic Control Plans.
7. Sign Spacings (L), Taper Lengths (T) and Spacing of Cones or Delineators Shall be as Shown in Table 1, Unless Otherwise Noted on the Traffic Control Plans.
8. All Traffic Lanes Shall be a Minimum of 10 Feet Wide.
9. All Construction Warning Signs Shall be Promptly Removed or Covered Whenever the Message is not Applicable or not in Use.
10. The Backs of All Signs Used for Traffic Control Shall be Appropriately Covered to Preclude the Display of Inapplicable Sign Messages (i.e., When Signs Have Messages on Both Faces).
11. At the End of Each Day's Work or as Soon as the Work is Completed, the Permittee Shall Remove all Traffic Control Devices no Longer Needed to Permit Free and Safe Passage of Public Traffic. Removal Shall be in the Reverse Order of Installation.
12. Replace Permanent Pavement Markings and Traffic Signs Upon Completion of Each Phase of Work.

ADDITIONAL NOTES FOR TRAFFIC CONTROL PLAN

1. Existing Conflicting Pavement Markings Shall be Removed and Temporary Markings Shall be Installed Before Traffic Patterns are Changed. After Completion of the Work, Temporary Markings Shall be Removed. When a Lane Closure is Limited to Daylight Hours, Lanes may be Delineated by Channelizing Devices in Lieu of Temporary Markings.

TABLE 1 FOR TRAFFIC CONTROL PLAN

Posted Speed Limit (M.P.H.)	Sign Spacing (D) (Feet)	Taper Length (T) (Feet)		Longitudinal Buffer Space (B) (Feet)	Spacing of Cones or Delineators (Feet)		
		*W = 12' or Less	*W = Greater Than 12'		Taper	Tangent	Work Area
20	250	200	Wx17	35	20	20	10
25	250	200	Wx17	55	25	25	10
30	250	250	Wx20	85	30	30	10
35	250	250	Wx20	120	35	35	10
40	500	350	Wx30	170	40	40	10
45	500	550	Wx45	220	45	45	10
50	1000	600	Wx50	280	50	50	10
55	1000	700	Wx55	335	55	55	10

*W = Width of Lane, Shoulder or Offset

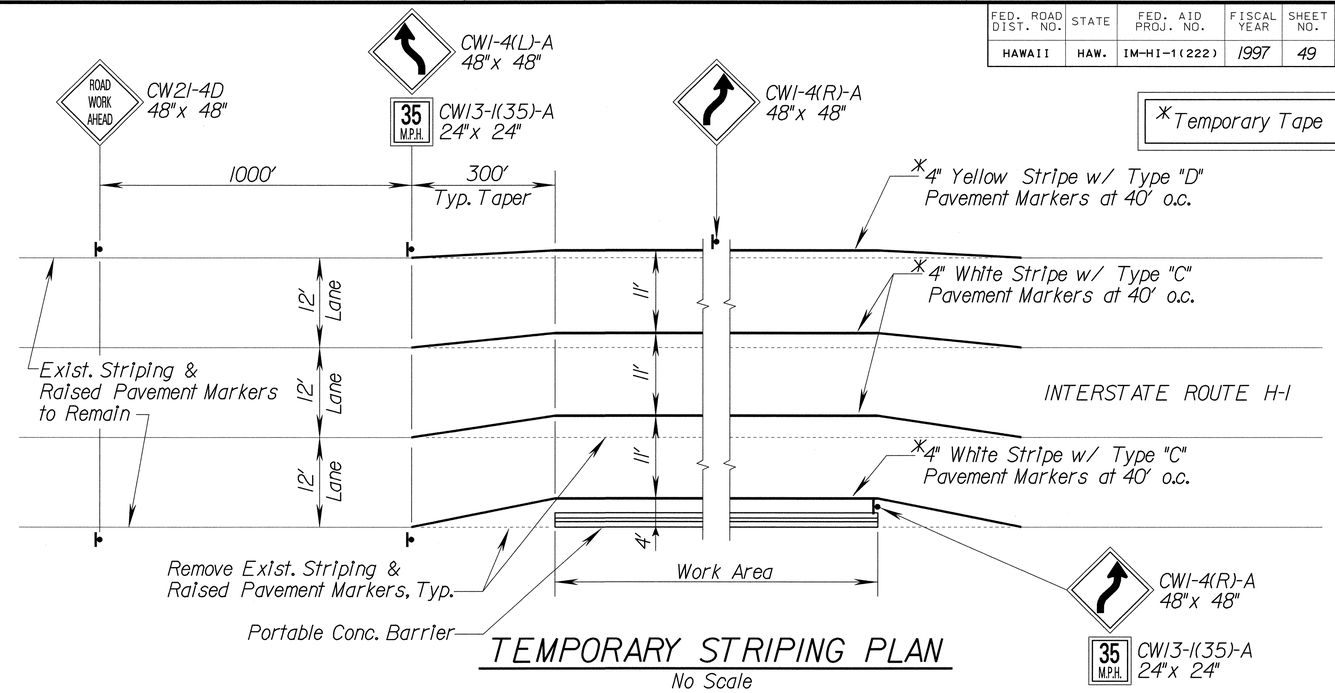

TEMPORARY STRIPING PLAN

No Scale

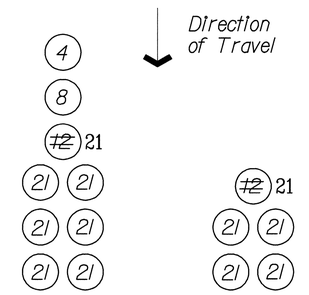

TYPE A TYPE B

Notes :

1. Contractor to Install System Per Manufacturer's Recommendation.
2. Numbers Indicate Pounds of Sand in Thousands.

ENERGITE III SYSTEM LAYOUT

No Scale

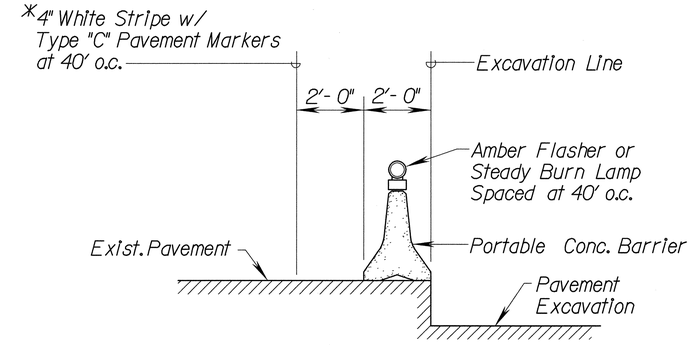

PLACEMENT OF PORTABLE CONC. BARRIER DURING ALL HOURS

No Scale

KAY MURANAKA
LICENSED PROFESSIONAL ENGINEER
No. 2330-C
HAWAII, U.S.A.

THIS WORK WAS PREPARED BY ME OR UNDER MY SUPERVISION

STATE OF HAWAII
DEPARTMENT OF TRANSPORTATION
HIGHWAYS DIVISION

TRAFFIC CONTROL DETAILS & NOTES

INTERSTATE ROUTE H-1
Makakilo Interchange Improvements to Westbound Off-Ramp and Eastbound On-Ramps

Scale: None Date: May 9, 1997

SHEET No. F-8 OF 8 SHEETS

ORIGINAL PLAN | SURVEY PLOTTED BY | DRAWN BY | TRACED BY | DESIGNED BY | QUANTITIES BY | CHECKED BY | DATE | NOTE BOOK No.

M:\DGN\KAPOLEI\MAKAKILO\TCP-08.DGN