FED. ROAD DIST. NO.	STATE	PROJ. NO.	FISCAL YEAR	SHEET NO.	TOTAL SHEETS
HAWAII	HAW.	H1H-01-97M	1997	15	26

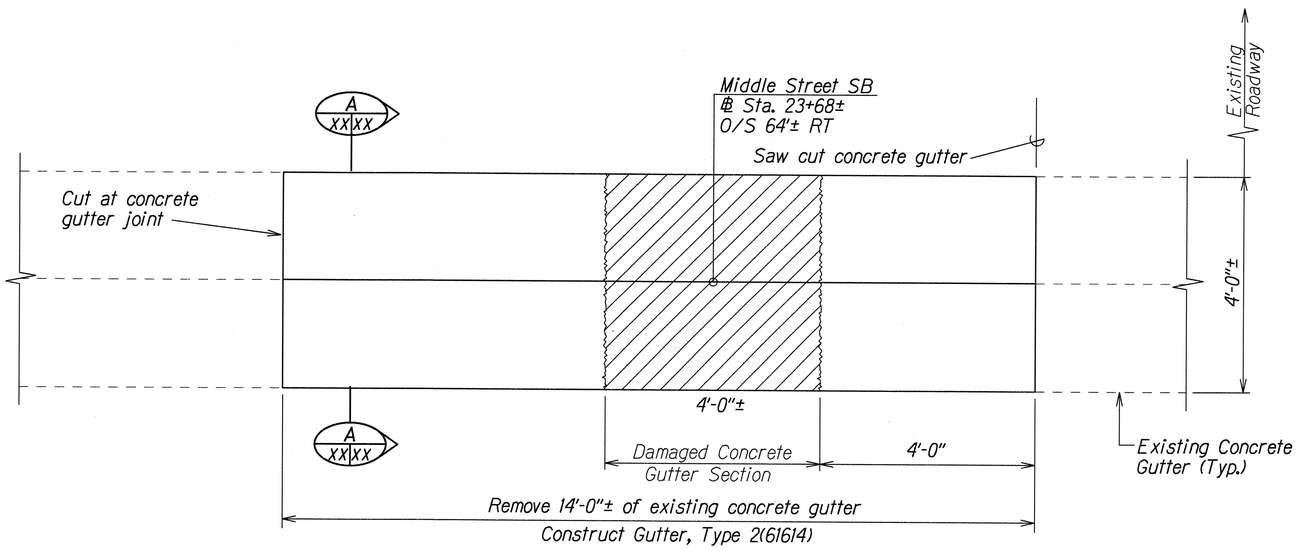

PLAN

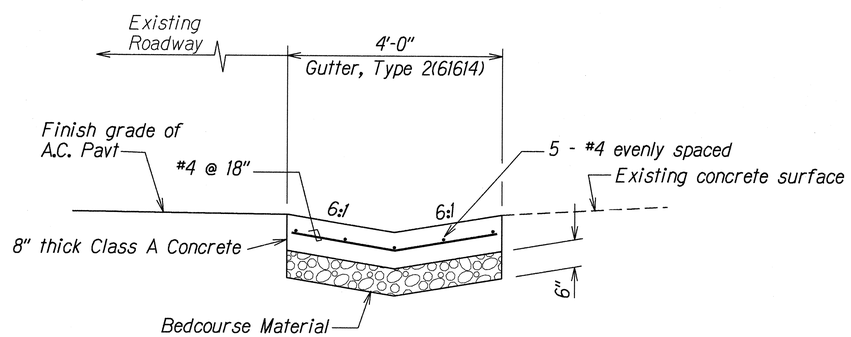

SECTION A XX XX

STATE OF HAWAII
DEPARTMENT OF TRANSPORTATION
HIGHWAYS DIVISION

DRAINAGE DETAILS

INTERSTATE ROUTE H-1
AND MIDDLE STREET RESURFACING
North King St. to Kamehameha Hwy.
Project No. H1H-01-97M

Scale: 3/4"=1'-0" Date: May, 1997

SHEET No. 1 OF 1 SHEETS

ORIGINAL PLAN
SURVEY PLOTTED BY
DRAWN BY L. Cockett & R. Sato
TRACED BY
DESIGNED BY X
QUANTITIES BY
CHECKED BY
DATE X
NOTE BOOK dh2lennox.lihi lihihdt01.dgn
No.