FED. ROAD DIST. NO.	STATE	FED. AID PROJ. NO.	FISCAL YEAR	SHEET NO.	TOTAL SHEETS
HAWAII	HAW.	12-H1-1(180)	1986	52	99

STRUCTURAL NOTES

DESIGN SPECIFICATION:
AASHTO Standard Specifications for Highway Bridges (13th edition) with 1984 Interim Specifications

DESIGN LIVE LOAD
HS-20-44
Interstate Loading

ALLOWABLE DESIGN STRESSES
Reinforced concrete : $f_c = 0.40 f'_c$
Reinforcing steel : $f_s = 20{,}000$ p.s.i. for Grade 40
Prestressed concrete: See Design Specifications
Structural steel : See Design Specifications

MATERIALS
Reinforced concrete : Class A unless noted otherwise
Class BD for bridge deck
Reinforcing steel : ASTM A615 Grade 40
Structural steel : ASTM A36, hot dipped galvanized after fabrication
Prestressed concrete : See Sht. Q2
Admixture in concrete : See Specifications for Road and Bridge Construction (1985).

CONSTRUCTION METHODS
1. See current edition (1985) of Hawaii Standard Specifications for Road and Bridge Construction and Special Provisions.
2. Spread footings for Piers shall be excavated and poured neat against undisturbed ground. In case of over excavation, space between footing and ground shall be filled with concrete at the Contractor's expense and as directed by the Engineer. The minimum quality of the fill concrete shall be Class D.
3. In general, top of concrete deck slab shall be constructed to follow the finish roadway vertical and horizontal curves and grades.
4. Girder concrete seats and creep blocks shall be poured monolithically with the supporting structures. Top surfaces of concrete seats shall have a steel trowel finish, smooth, level (transversely) and true to grade, with deviation from a level plane not exceeding 1/16 inch.
5. Except as otherwise noted, all vertical dimensions are measured plumb.
6. All items designated for removal shall be removed in such a manner as to preclude any damage to the existing structure. Large impacting or vibratory types of equipment will not be permitted in the removal operation, nor in drilling holes for dowels. Small vibratory tools approved by the Engineer, will be permitted.
7. Where portion of concrete is to be removed, or saw cut is called for, the line of separation between the portions that is to remain & be removed, shall be saw cut to a minimum depth of 1 1/2 inch or to the depth of the reinforcements.
8. The Contractor shall be responsible for the protection of the existing and new structures from damage due to construction, and shall repair any damage at his expense, to the satisfaction of the Engineer.
9. The contractor shall be responsible for the location of existing reinforcement by whatever means, including the use of scanning devices, in his drilling operations.

CONSTRUCTION METHODS (cont.)
10. All existing reinforcing, that can be incorporated in the new work, shall be cleaned and utilized as required in the new work, as directed by the Engineer.
11. Existing reinforcing, that cannot be incorporated in the new work, shall be removed to a minimum depth of one inch beneath finish surface, and the resultant depression patched with mortar.
12. Deck concrete area, left exposed due to the removal of existing concrete, shall be ground smooth and grooved to extend the existing roadway grade.

GENERAL
1. All items noted incidental will not be paid for separately.
2. The contractor shall verify the location of all existing utility lines and notify the respective owners before commencing with work.
3. The bottom of all elastomeric and preformed fabric bearing pads shall be secured to concrete seats, to prevent displacement, with adhesives approved by the Engineer.
4. Except as otherwise noted on drawings, all exterior corners & re-entrant angles 90° or less in concrete work shall be chamfered 3/4" x 3/4".
5. For concrete finish see standard specifications and/or Special Provisions.
6. Standard Detail Drawings refer to all structures in general except for modifications as may be required for special conditions. Per such modifications refer to corresponding detailed drawings.

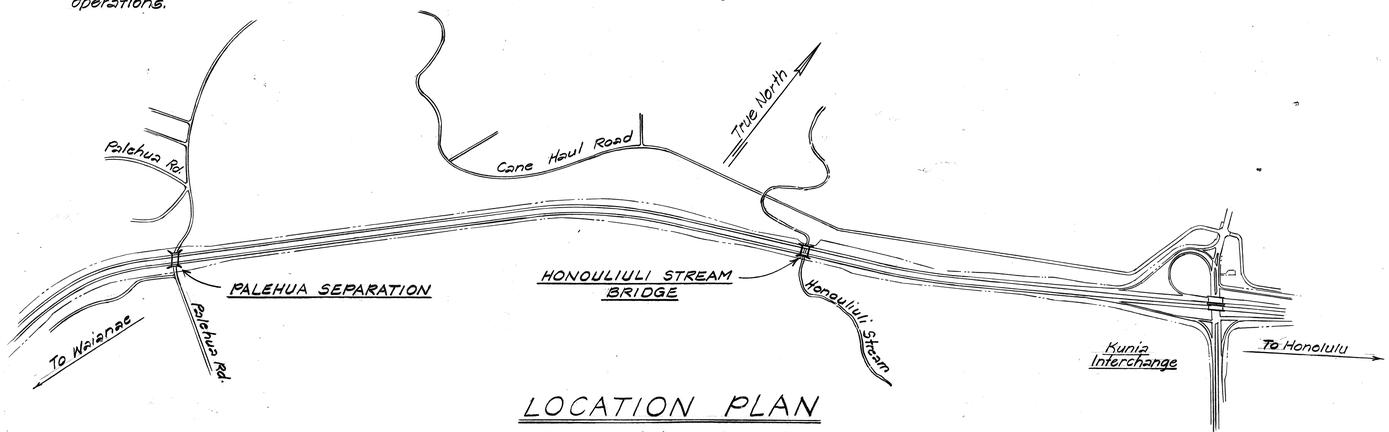

LOCATION PLAN
Not to Scale

INDEX

STATE OF HAWAII
DEPARTMENT OF TRANSPORTATION
HIGHWAYS DIVISION

PALEHUA SEPARATION
HONOULIULI STREAM BRIDGE
WIDENING
INDEX, NOTES, & LOCATION PLAN
INTERSTATE ROUTE H-1, PALAILAI I.C TO KUNIA I.C. CONSTRUCTION OF ADDITIONAL LANES
F.A.I. PROJ. NO. 12-H1-1(180)
Scale: As Shown Date: July 1985

SHEET No. S1 OF 12 SHEETS

		DATE
SURVEY PLOTTED BY		
DRAWN BY	J.N.F.	7/85
TRACED BY	" "	" "
DESIGNED BY	M.Y.	7/85
QUANTITIES BY	" "	" "
CHECKED BY	L.A.G.T.	7/85

ORIGINAL PLAN
NOTE BOOK
No.

FED. ROAD DIST. NO.	STATE	FED. AID PROJ. NO.	FISCAL YEAR	SHEET NO.	TOTAL SHEETS
HAWAII	HAW.	IR-HI-1(189)	1986	53	99

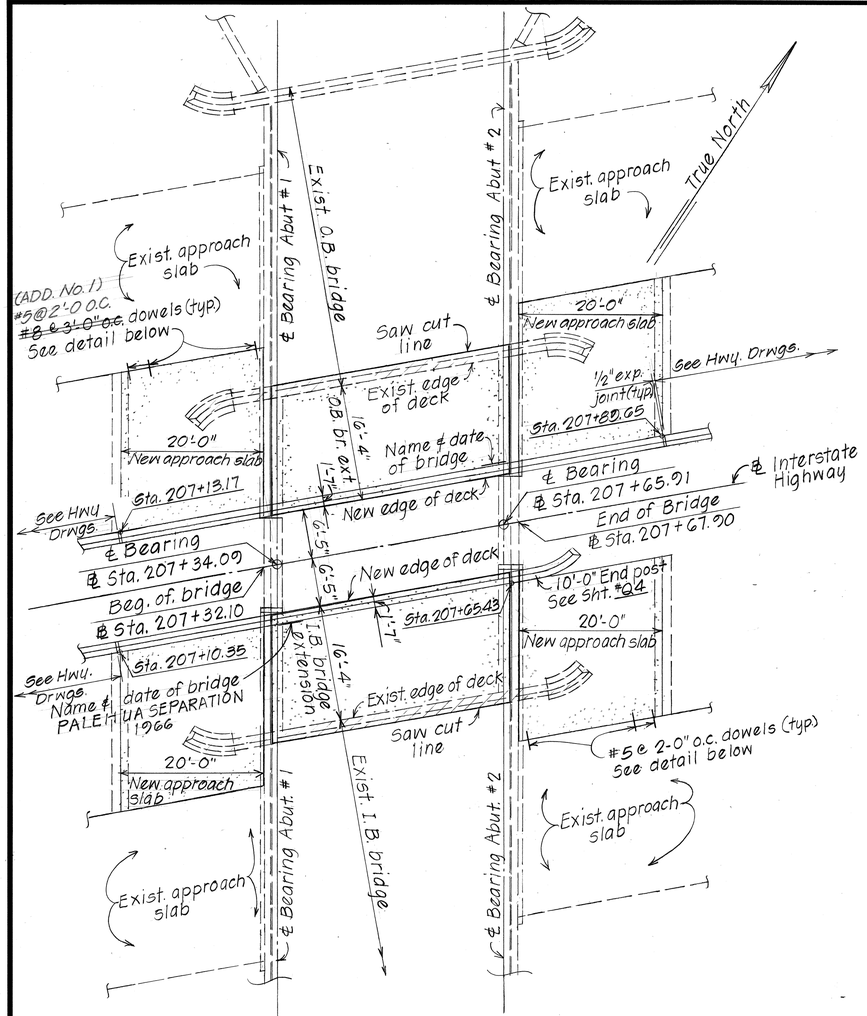

LAYOUT PLAN Scale: 1" = 10'-0"

ESTIMATED QUANTITIES

ITEM NO.	ITEM	UNIT	QUANTITIES
202.0441	Removal of portion of Palehua Separation	Lump Sum	(28 C.Y.)
206.6101	Structure excavation for Palehua Separation	Cu. Yd.	96 C.Y.
206.7201	Structure backfill for Palehua Separation	Cu. Yd.	42 C.Y.
206.8200	Filter material for structures	Cu. Yd.	10 C.Y.
503.1084	Deck joint seal (poured) - Palehua Separation	Lump Sum	(240 L.F.)
503.1200	Concrete in Palehua Separation	Lump Sum	(43 C.Y.)
503.1205	Concrete in footing for bridge railing	Lump Sum	(18 C.Y.)
503.1215	2-inch diameter drilled holes for dowels	Each	4 Ea.
504.74~~00~~ 15	Prestressed concrete planks for structure	Lump Sum	(1,066 S.F.)
507.7600	Concrete bridge railing (2'-8" Barrier Type)	Lin Ft.	141 L.F.
602.0200	Reinforcing steel in Palehua Separation	Lump Sum	(5,000 Lbs.)
602.0205	Reinforcing steel in footing for bridge railing	Lump Sum	(1,100 Lbs.)

Item no. 202.0441 includes, but is not limited to, conc. railings & abutments.

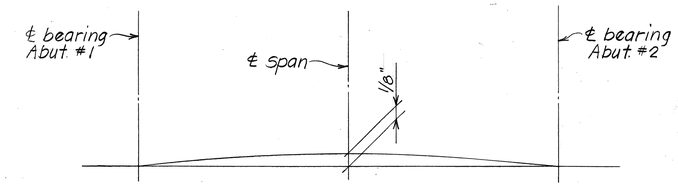

1. For use in determining screed grade during deck pour at new edge of deck.
2. Match grade at existing deck edge.

NEW EDGE OF DECK CAMBER DIAGRAM

Not to scale

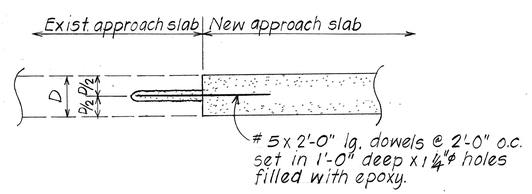

TYP. APPROACH SLAB CONNECTION DETAIL

Scale: 3/4" = 1'-0" (Highway Item)

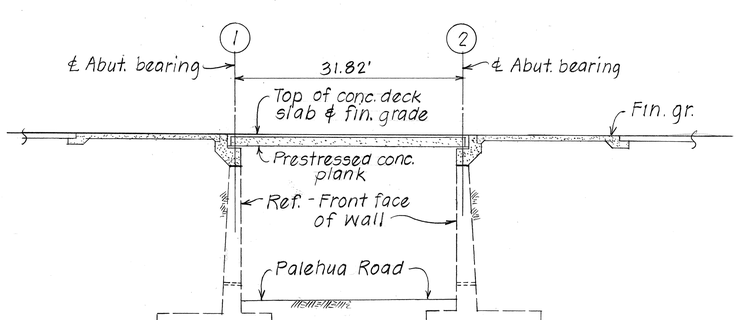

LONGITUDINAL SECTION ALONG ℄ INBOUND OR OUTBOUND BRIDGE Scale: 1" = 10'-0"

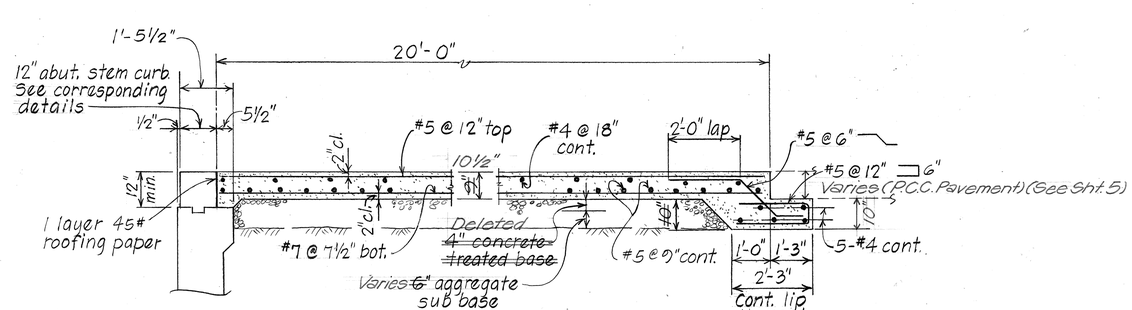

TYPICAL APPROACH SLAB SECTION

Scale: ~~1/2" = 1'-0"~~ (Highway Item)

N.T.S.

		DATE
SURVEY PLOTTED BY		
DRAWN BY	L.M.A., N.Y.	7/85
TRACED BY		
DESIGNED BY	M.Y.	7/85
QUANTITIES BY		
CHECKED BY	L.A., G.T.	7/85

ORIGINAL PLAN

NOTE BOOK

No.

STATE OF HAWAII
DEPARTMENT OF TRANSPORTATION
HIGHWAYS DIVISION

PALEHUA SEPARATION WIDENING
LAYOUT PLAN, ESTIMATED QUANTITIES

INTERSTATE ROUTE H-1, PALAILAI I.C. TO KUNIA I.C. CONSTRUCTION OF ADDITIONAL LANES
F.A.I. Proj. No. IR-HI-1(189)

Scale: As Shown Date: July 1985

SHEET No. 52 OF 12 SHEETS

FED. ROAD DIST. NO.	STATE	FED. AID PROJ. NO.	FISCAL YEAR	SHEET NO.	TOTAL SHEETS
HAWAII	HAW.	IR-HI-1(189)	1986	54	99

NOTE:
Bridge deck not shown.

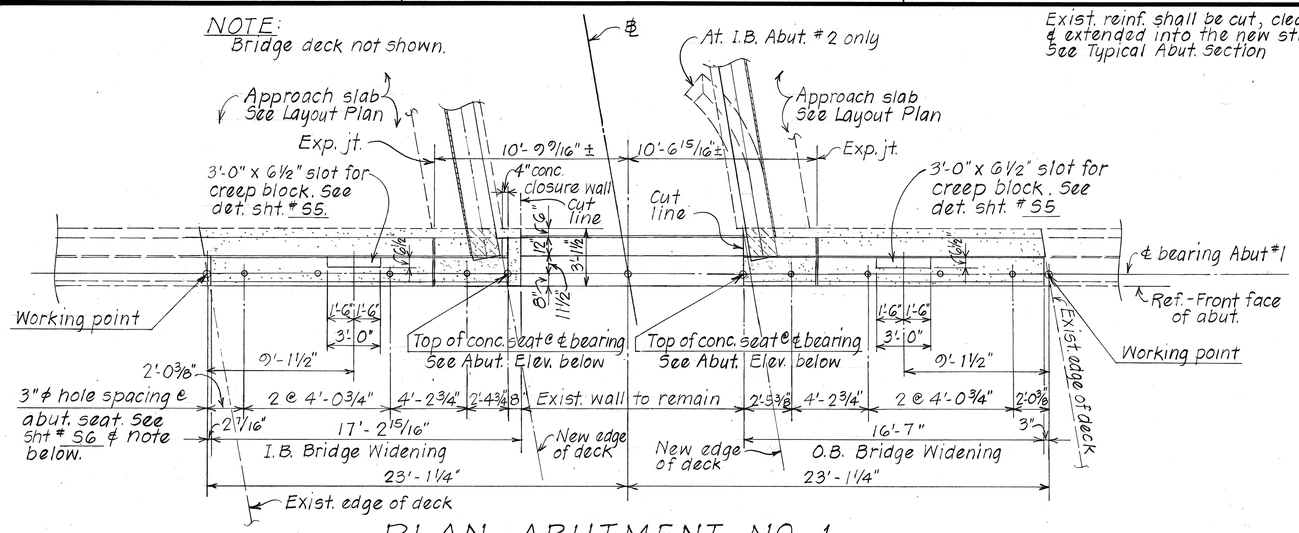

PLAN-ABUTMENT NO. 1

(ABUTMENT NO. 2 - 180° ROTATION WITH REVERSED TRAVELWAY)

Scale: ¼" = 1'-0"

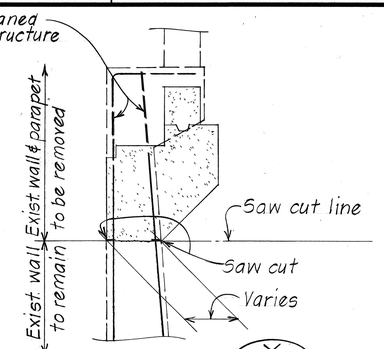

SECTION Y S3|S3

Scale: ½" = 1'-0"

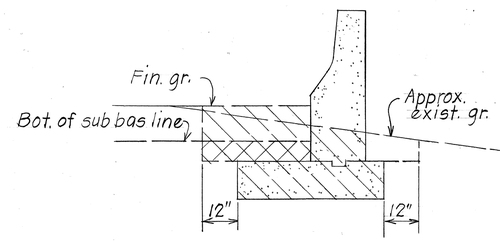

AT CONCRETE RAIL "RT-B"

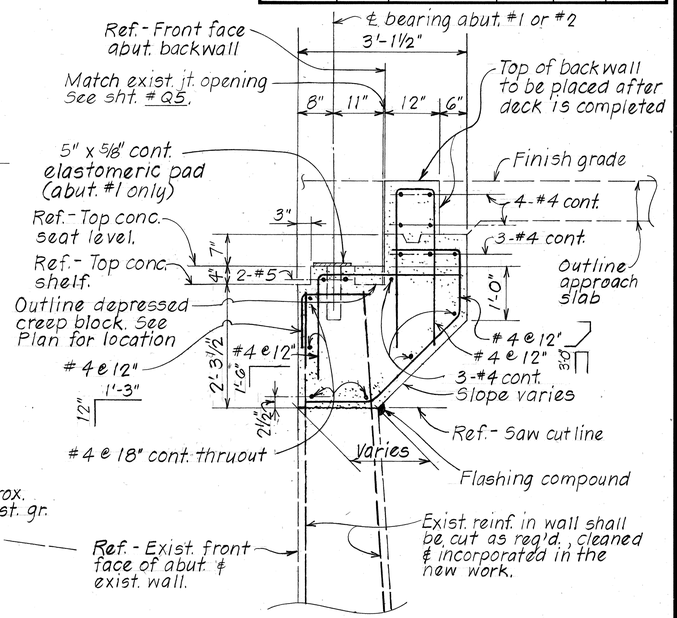

TYPICAL ABUT. SECT. X S3|S3

Scale: ¾" = 1'-0"

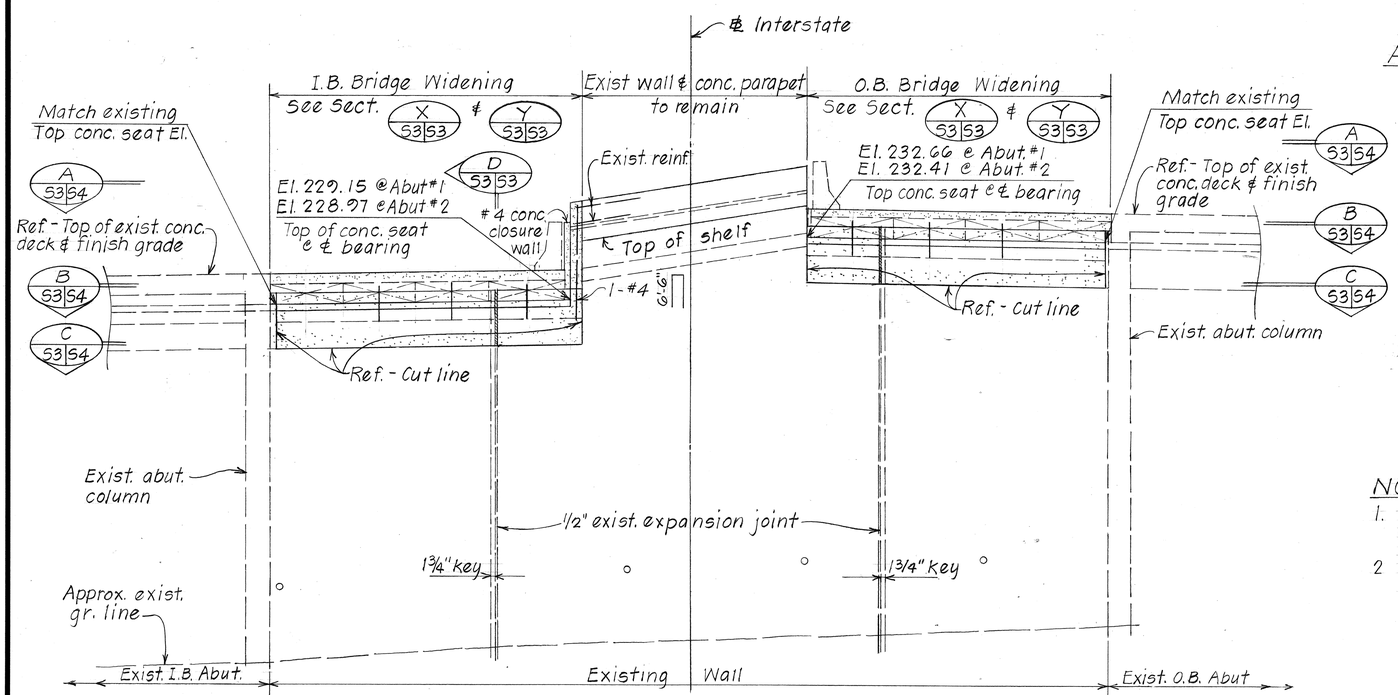

ELEVATION - ABUTMENT NO. 1

(ABUTMENT NO. 2 - MIRROR IMAGE)

Scale: ¼" = 1'-0"

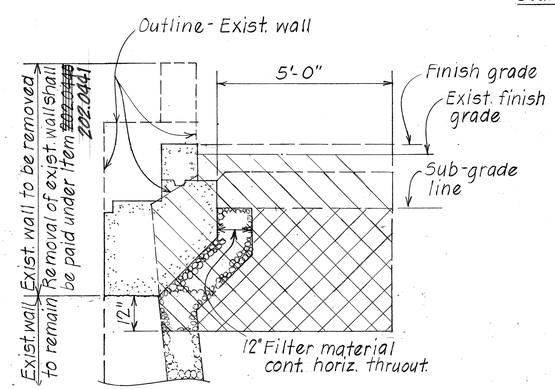

NOTES:

1. Hatched area shown thus \\\\ denotes limits of structure excavation payline. All other excavation shall be roadway excavation.
2. Hatched area shown thus //// denotes limits of structure backfill.

TYP. STRUCTURAL EXC. & BACKFILL PAY LIMITS DETAIL

Scale: ½" = 1'-0"

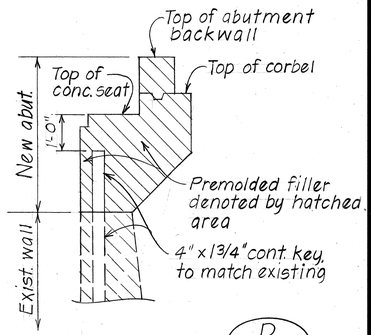

SECTION D S3|S3

Scale: ½" = 1'-0"

STATE OF HAWAII
DEPARTMENT OF TRANSPORTATION
HIGHWAYS DIVISION

PALEHUA SEPARATION WIDENING

ABUTMENT ① & ② - PLAN & ELEVATION
TYPICAL ABUT. SECT., TYP. STRUCT. EXC. DETS.
INTERSTATE ROUTE H-1, PALAILAI I.C. TO KUNIA I.C. CONSTRUCTION OF ADDITIONAL LANES
F.A.I. Proj. No. IR-HI-1(189)

Scale: As Shown — Date: July 1985

SHEET No. S3 OF 12 SHEETS

ORIGINAL PLAN		DATE
	SURVEY PLOTTED BY	
	DRAWN BY L.M.A.	7/85
NOTE BOOK	TRACED BY	
	DESIGNED BY M.Y.	7/85
No.	QUANTITIES BY	
	CHECKED BY L.A., G.T.	7/85

FED. ROAD DIST. NO.	STATE	FED. AID PROJ. NO.	FISCAL YEAR	SHEET NO.	TOTAL SHEETS
HAWAII	HAW.	IR-HI-1(189)	1986	55	99

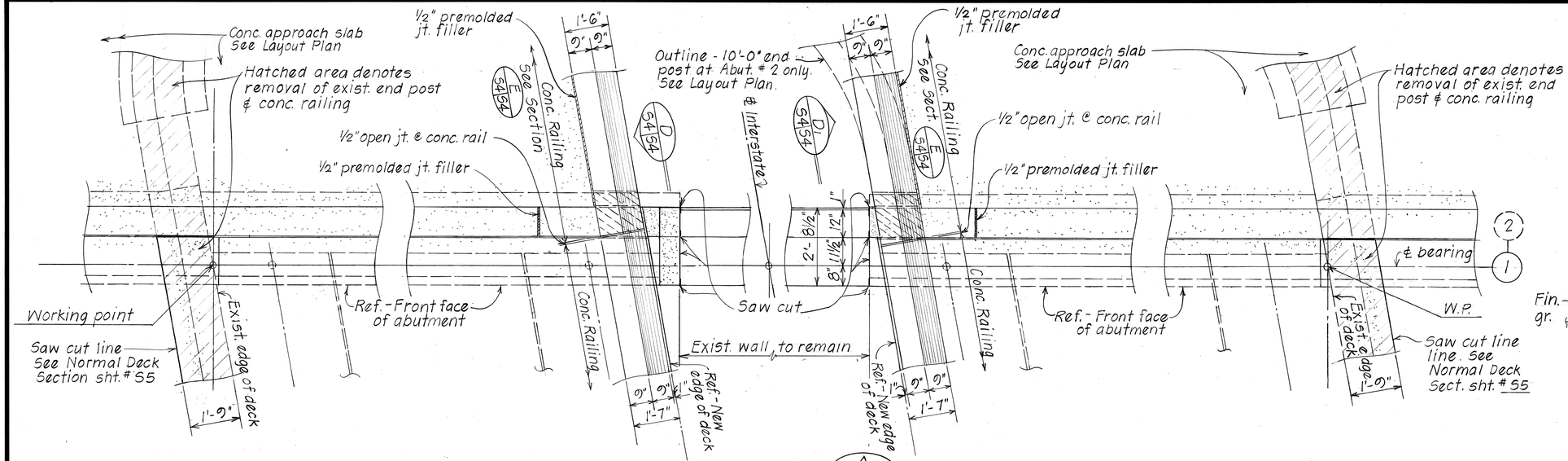

SECTION A S3|S4

Scale : 1/2" = 1'-0"

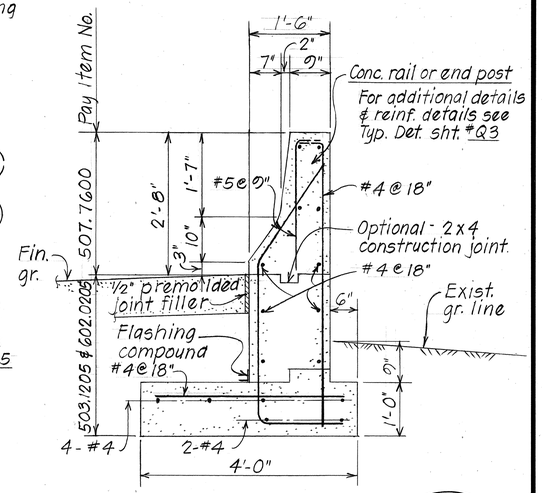

TYPICAL SECTION E S4|S4

Scale : 3/4" = 1'-0"

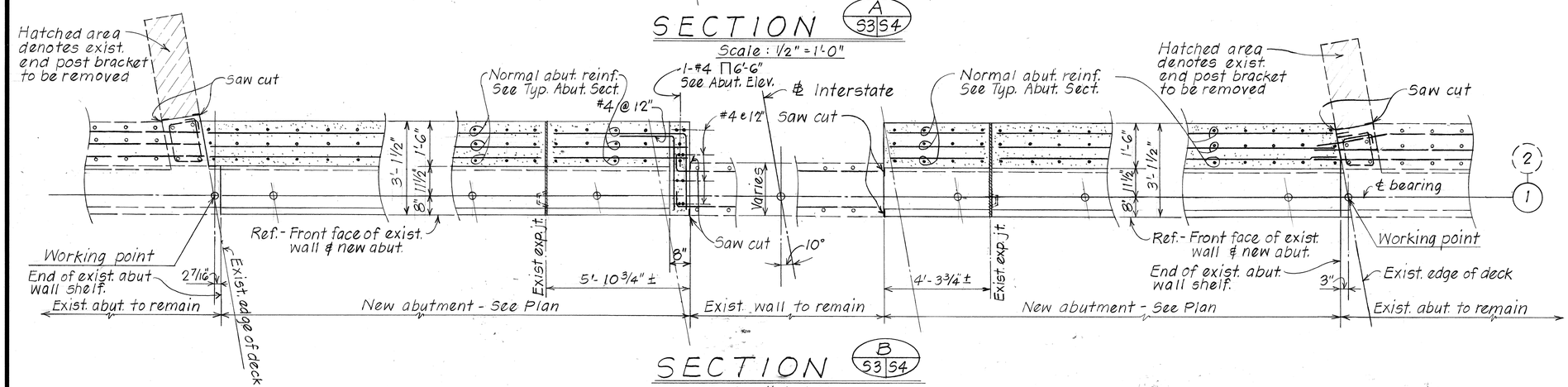

SECTION B S3|S4

Scale : 1/2" = 1'-0"

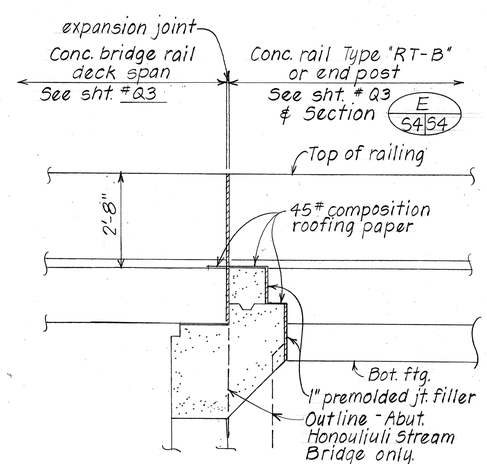

SECTION D S4|S4

SECTION D1 S4|S4 - SIMILAR EXCEPT OPPOSITE HAND

Scale : 1/2" = 1'-0"

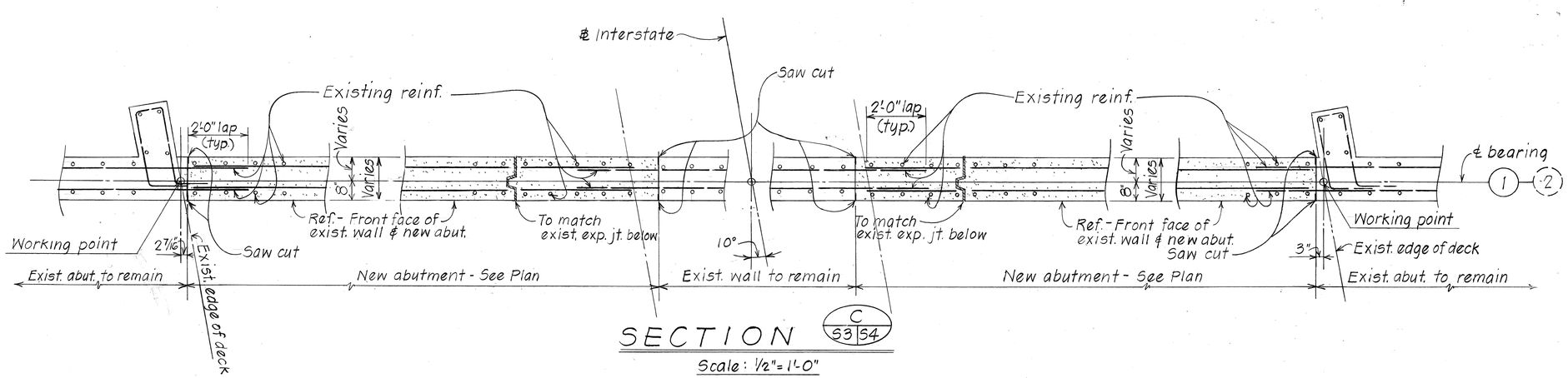

SECTION C S3|S4

Scale : 1/2" = 1'-0"

		DATE
ORIGINAL PLAN	SURVEY PLOTTED BY	
	TRACED BY	L.M.A. 7/85
	DESIGNED BY	M.Y. 7/85
NOTE BOOK	QUANTITIES BY	
No.	CHECKED BY	L.A., G.T. 7/85

STATE OF HAWAII
DEPARTMENT OF TRANSPORTATION
HIGHWAYS DIVISION

PALEHUA SEPARATION WIDENING

ABUTMENT 1 & 2 SECTIONS

INTERSTATE ROUTE H-1, PALAILAI I.C. TO KUNIA I.C. CONSTRUCTION OF ADDITIONAL LANES

F.A.I. Proj. No. IR-HI-1(189)

Scale: As Shown Date: July 1985

SHEET No. 54 OF 12 SHEETS

FED. ROAD DIST. NO.	STATE	FED. AID PROJ. NO.	FISCAL YEAR	SHEET NO.	TOTAL SHEETS
HAWAII	HAW.	IR-H1-1(189)	1986	56	99

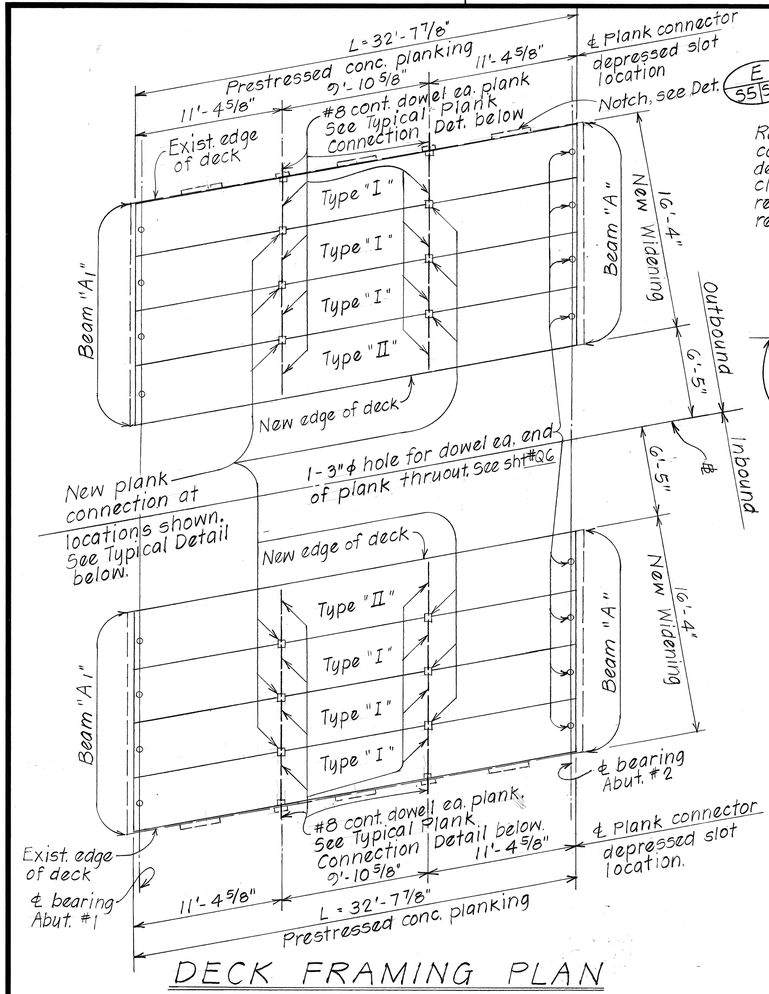

DECK FRAMING PLAN

Scale: 3/16" = 1'-0"

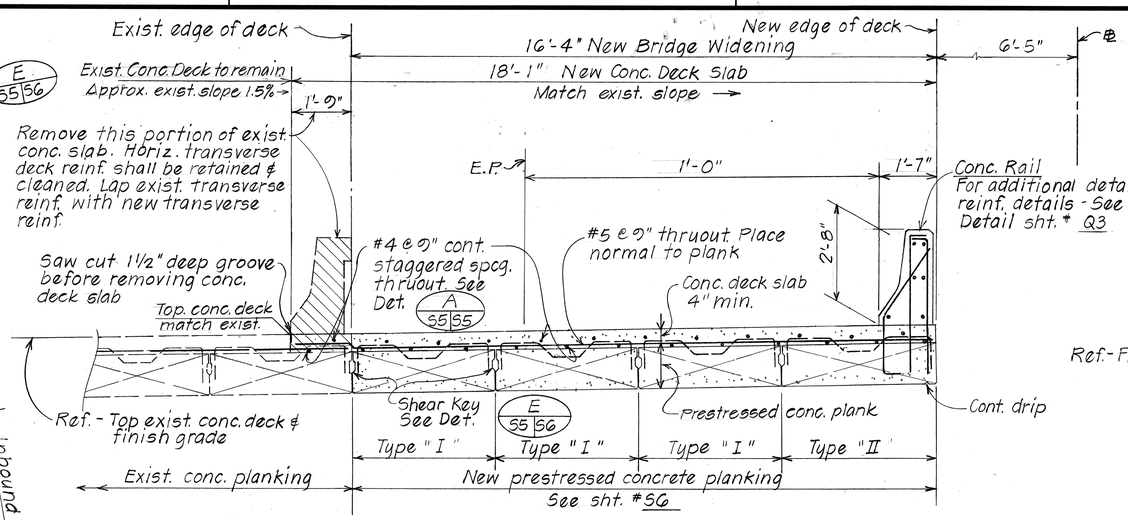

NORMAL SECTION OUTBOUND BRIDGE - AS SHOWN

(INBOUND BRIDGE SIMILAR EXCEPT OPPOSITE HAND)

Scale: ½" = 1'-0"

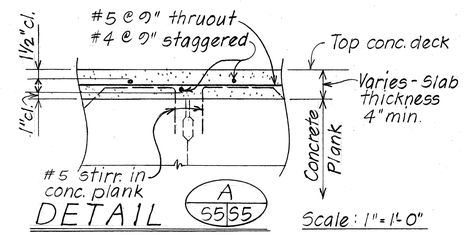

DETAIL

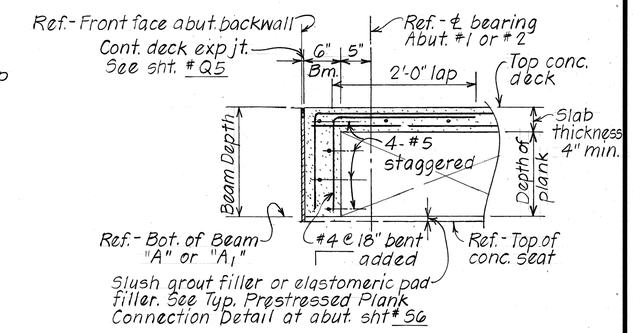

TYPICAL

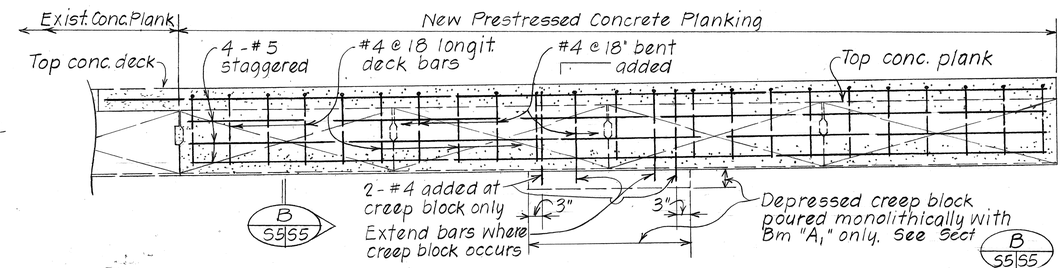

ELEVATION BEAM "A" - AS SHOWN

(BEAM "A1" SIMILAR EXCEPT AS OTHERWISE NOTED)

Scale: 3/4" = 1'-0"

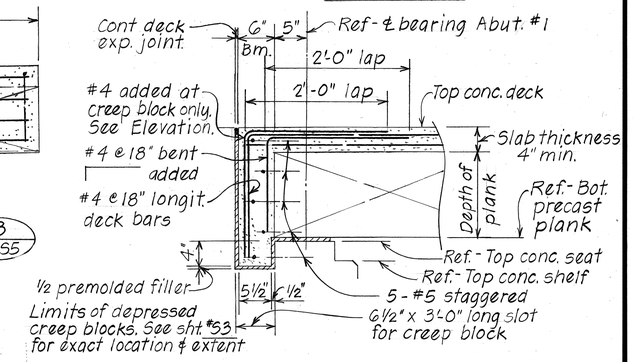

CREEP BLOCK (BEAM "A1" ONLY)

SECTION B 55/55

Scale: 1" = 1'-0"

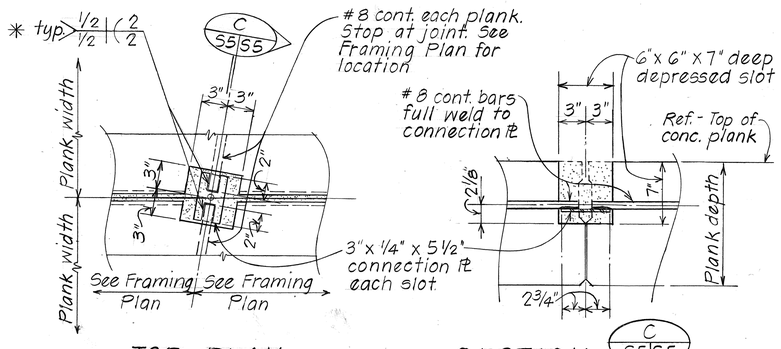

TOP PLAN

SECTION C 55/55

AT NEW PLANKS

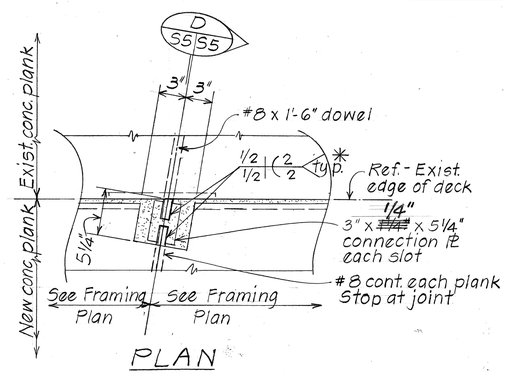

PLAN

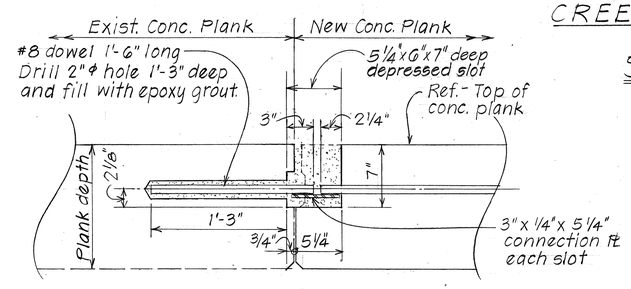

SECTION D 55/55

AT EXISTING PLANK

* Welding shall be incidental to Item No. ~~504.7400~~ 504.7415

TYPICAL PLANK CONNECTION DETAILS

Scale: 1½" = 1'-0"

SURVEY PLOTTED BY			
DRAWN BY	L.M.A.	DATE	7/85
TRACED BY			
DESIGNED BY	M.Y.	DATE	7/85
QUANTITIES BY			
CHECKED BY	L.A., G.T.	DATE	7/85
ORIGINAL PLAN	NOTE BOOK	No.	

STATE OF HAWAII
DEPARTMENT OF TRANSPORTATION
HIGHWAYS DIVISION

PALEHUA SEPARATION WIDENING

NORMAL DECK SECTION
DECK FRAMING PLAN, BEAM "A" & "A1"

INTERSTATE ROUTE H-1, PALAILAI I.C. TO KUNIA I.C. CONSTRUCTION OF ADDITIONAL LANES
F.A.I. Proj. No. IR-H1-1(189)

Scale: As Shown — Date: July 1985

SHEET No. 55 OF 12 SHEETS

FED. ROAD DIST. NO.	STATE	FED. AID PROJ. NO.	FISCAL YEAR	SHEET NO.	TOTAL SHEETS
HAWAII	HAW.	IR-HI-1(189)	1986	57	99

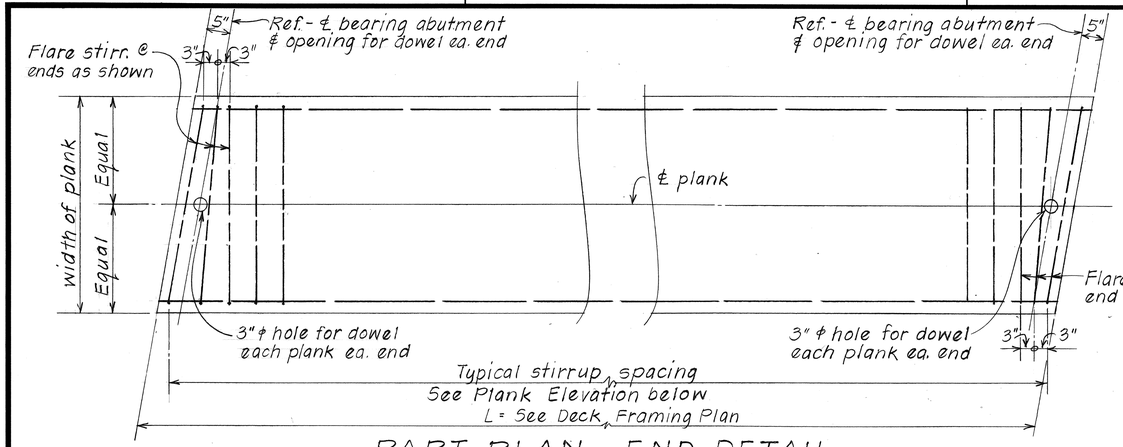

PART PLAN - END DETAIL

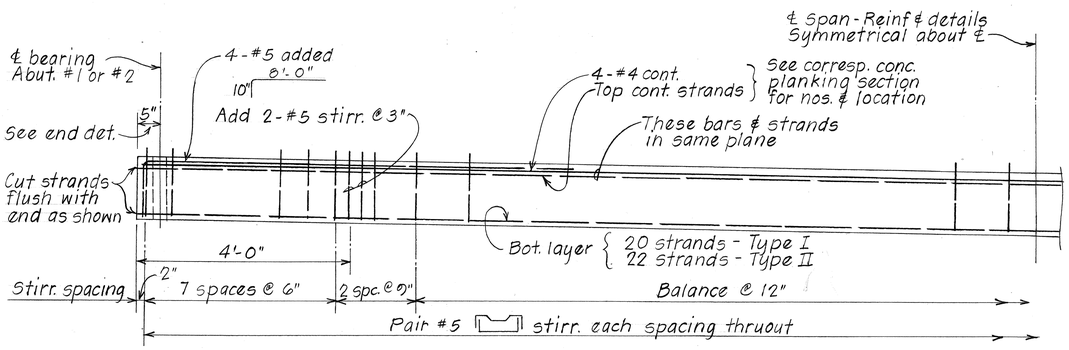

ELEVATION

TYPICAL PRESTRESSED CONCRETE PLANK - TYPES I & II

Scale: 3/4" = 1'-0"

Prestressed Concrete Plank
f'c = 5,000 psi @ 28 days
fci = 4,000 psi @ transfer

Prestressed Strands
A. 1/2" ϕ 270 ksi, 7 wire stress relieved strands (ASTM 416)
Total losses other than friction = 45,000 psi
B. Allow whole stresses in strands shall be in accordance with design specifications. (See General Structure Notes)

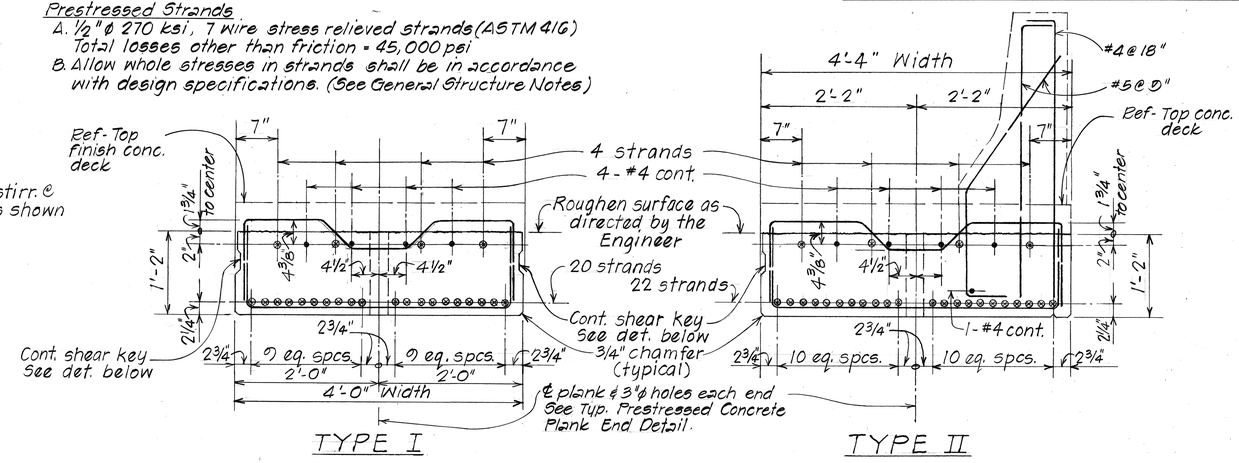

TYPICAL PRESTRESSED CONCRETE PLANK SECTIONS

Scale: 1" = 1'-0"

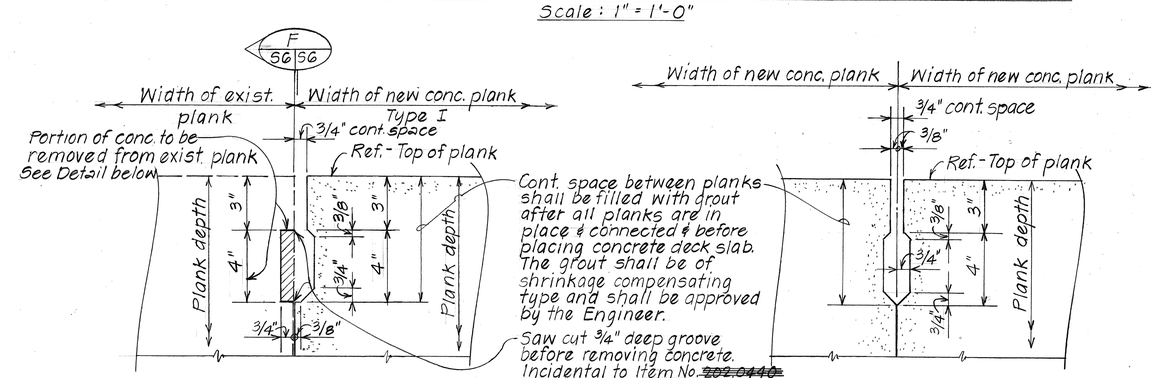

AT EXIST. PLANK ONLY

TYPICAL

DETAIL E 55 56 Scale: 3" = 1'-0"

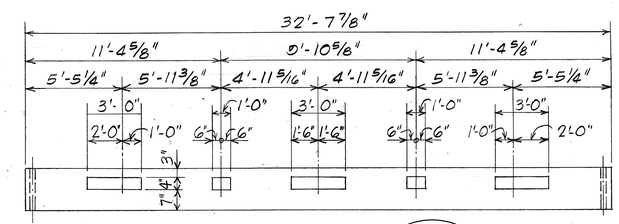

DETAIL F 56 56

Not to scale

TYPICAL SHEAR KEY DETAILS

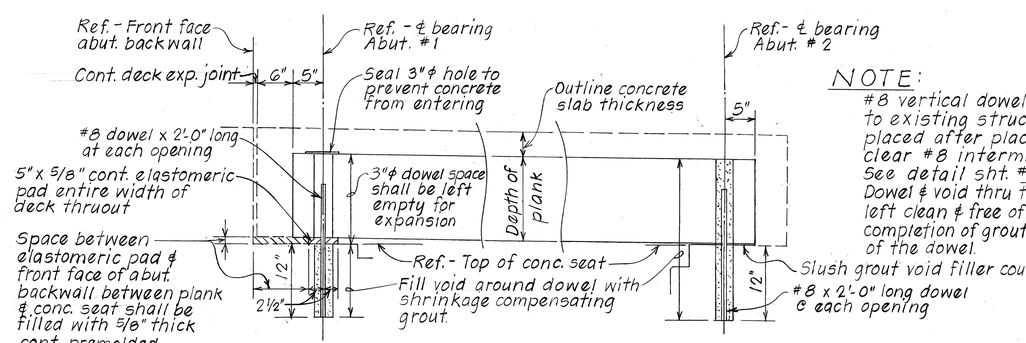

AT ABUTMENT #1

AT ABUTMENT #2

NOTE:
#8 vertical dowels for plank adjacent to existing structure should be placed after placement of plank so as to clear #8 intermediate plank connector. See detail sht. # 55.
Dowel & void thru the plank at abut. #1 shall be left clean & free of grout fragments, at the completion of grouting the embeded portion of the dowel.

TYPICAL DETAIL - PRESTRESSED PLANK CONNECTION TO ABUTMENTS

Scale: 1" = 1'-0"

ORIGINAL PLAN	SURVEY PLOTTED BY	DATE
	DRAWN BY L.M.A.	
	TRACED BY	
NOTE BOOK	DESIGNED BY M.Y.	
	QUANTITIES BY	
No.	CHECKED BY L.A. & G.T.	

STATE OF HAWAII
DEPARTMENT OF TRANSPORTATION
HIGHWAYS DIVISION

PALEHUA SEPARATION WIDENING

TYP. PRESTRESSED CONC. PLANKS

INTERSTATE ROUTE H-1, PALAILAI I.C. TO KUNIA I.C. CONSTRUCTION OF ADDITIONAL LANES
F.A.I. Proj. No. IR-HI-1(189)

Scale: As Shown Date: July 1985

SHEET No. 56 OF 12 SHEETS

FED. ROAD DIST. NO.	STATE	FED. AID PROJ. NO.	FISCAL YEAR	SHEET NO.	TOTAL SHEETS
HAWAII	HAW.	IR-HI-1(18D)	1986	58	99

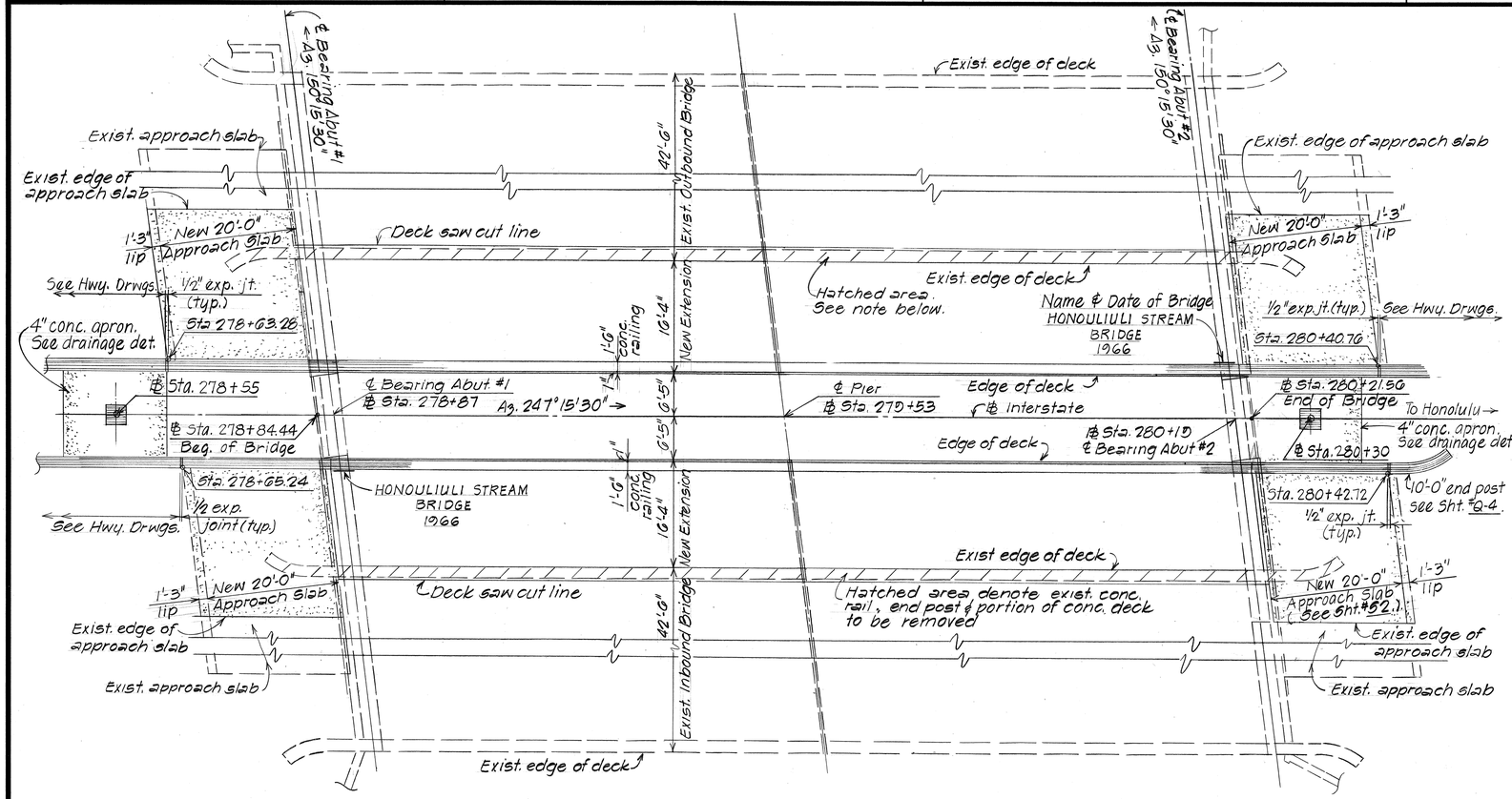

LAYOUT PLAN

Scale: 1" = 10'-0"

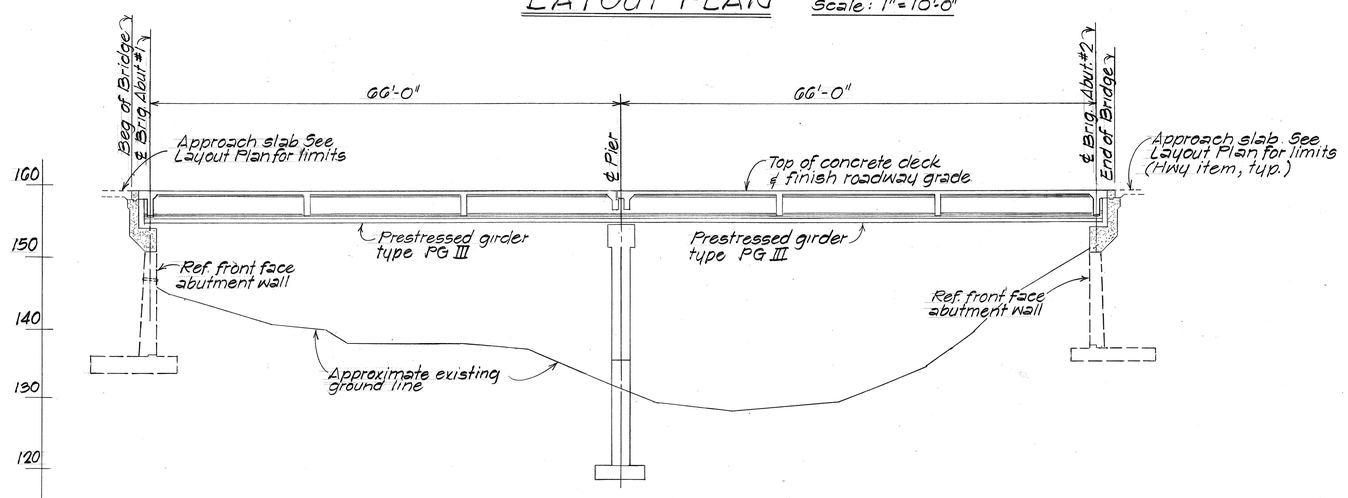

LONGITUDINAL SECTION ALONG ℄ INBOUND OR OUTBOUND BRIDGES

Scale: 1" = 10'-0"

ESTIMATED QUANTITIES

ITEM NO.	ITEM	UNIT	QUANTITIES
202.0442	Removal of portion of Honouliuli Stream Bridge	Lump Sum	(80 C.Y.)
206.6102	Structure excavation for Honouliuli Stream Bridge	Cu.Yd.	361 C.Y.
206.7202	Structure backfill for Honouliuli Stream Bridge	Cu. Yd.	18 C.Y.
206.8200	Filter material for structures	Cu. Yd.	16 C.Y.
503.1085	Deck joint seal (Preformed) - Honouliuli Stream Bridge	Lump Sum	(342 L.F.)
503.1090	Concrete in Honouliuli Stream Bridge	Lump Sum	(249 C.Y.)
503.1091	Concrete in footing for Honouliuli Stream Bridge	Lump Sum	(22 C.Y.)
503.1095	Drilled holes for 7/8" ϕ expansion bolts	Each	32 ea.
503.1205	Concrete in footing for bridge rail	Lump Sum	(22 C.Y.)
504.3100	Type III prestressed concrete girder	Lump Sum	(801 L.F.)
507.7600	Concrete bridge railing (2'-8" Barrier Type)	Lin. Ft.	364 L.F.
602.0090	Reinforcing steel in Honouliuli Stream Bridge	Lump Sum	(62,600 Lbs.)
602.0205	Reinforcing steel in footing for bridge rail	Lump Sum	(1,300 Lbs.)

Item no. 202.0442 includes, but is not limited to, concrete railings, abutments, piers & footings

ORIGINAL PLAN		DATE
	SURVEY PLOTTED BY	
	DRAWN BY H.N.P.	7/86
NOTE BOOK	TRACED BY	
	DESIGNED BY M.Y.	7/86
	REVIEWED BY	
No.	QUANTITIES BY	
	CHECKED BY L.A. G.T.	7/86

STATE OF HAWAII
DEPARTMENT OF TRANSPORTATION
HIGHWAYS DIVISION

HONOULIULI STREAM BRIDGE WIDENING

LAYOUT PLAN, LONGITUDINAL SECTION & ESTIMATED QUANTITIES

INTERSTATE ROUTE H-1, PALAILAI I.C. TO KUNIA I.C. CONSTRUCTION OF ADDITIONAL LANES

F.A. PROJ. NO. IR-HI-1(18D)

Scale: As Shown Date: July 1985

SHEET No. 57 OF 12 SHEETS

FED. ROAD DIST. NO.	STATE	FED. AID PROJ. NO.	FISCAL YEAR	SHEET NO.	TOTAL SHEETS
HAWAII	HAW.	IR-H1-1(180)	1986	50	99

NOTE:
1. Hatched area shown thus /// denotes limits of structure excavation payline. All other excavation shall be roadway excavation.
2. Hatched area shown thus \\\ denotes limits of structure backfill.

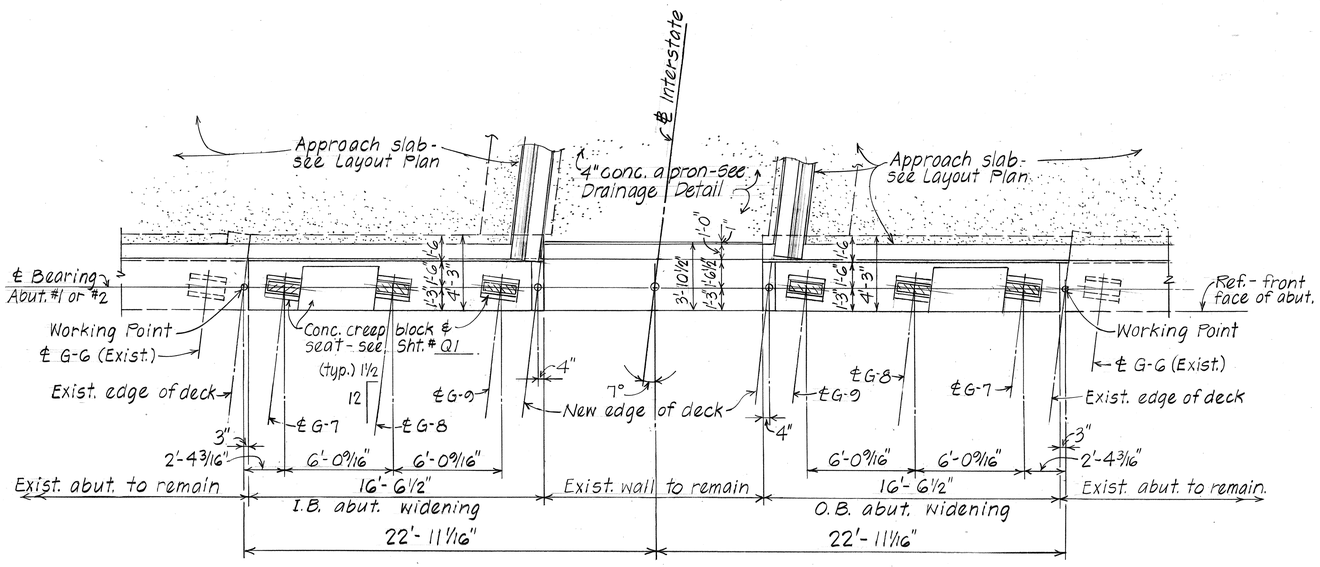

PLAN - ABUTMENT NO. 1 AS SHOWN
ABUTMENT NO. 2 - (180° ROTATION WITH REVERSED TRAVELWAY)
Scale: 1/4" = 1'-0"

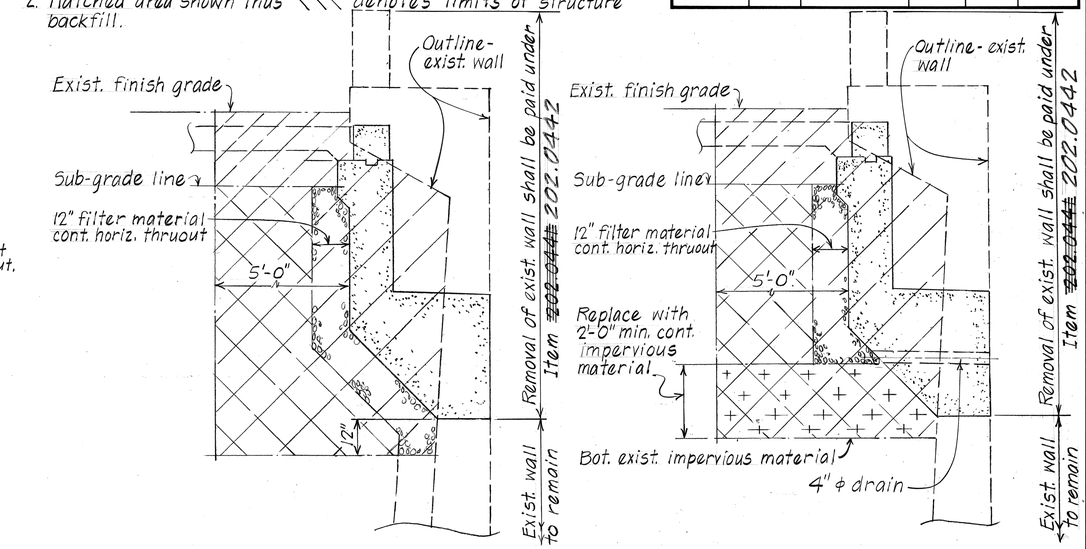

AT ABUTMENT NO. 1 AT ABUTMENT NO. 2
TYPICAL SECTION - ABUTMENT WALL EXCAVATION PAYLINE & BACKFILL Scale: 1/2" = 1'-0"

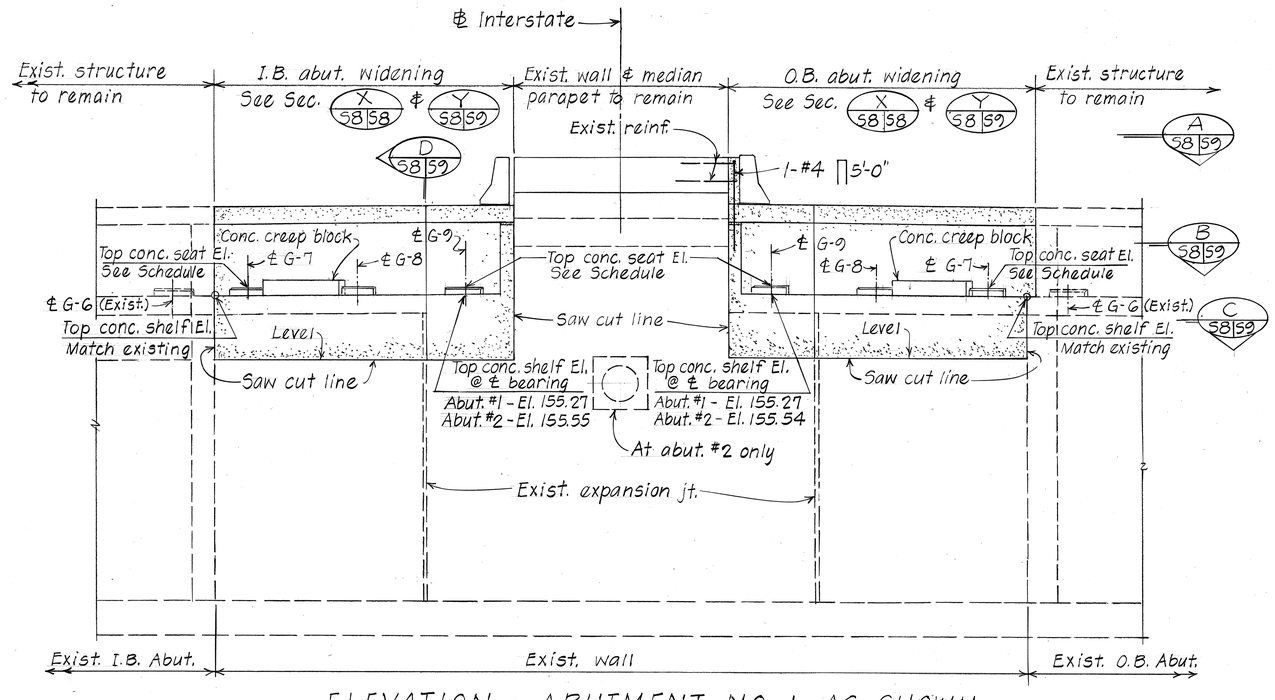

ELEVATION - ABUTMENT NO. 1 AS SHOWN
ABUTMENT NO. 2 - (MIRROR IMAGE) Scale: 1/4" = 1'-0"

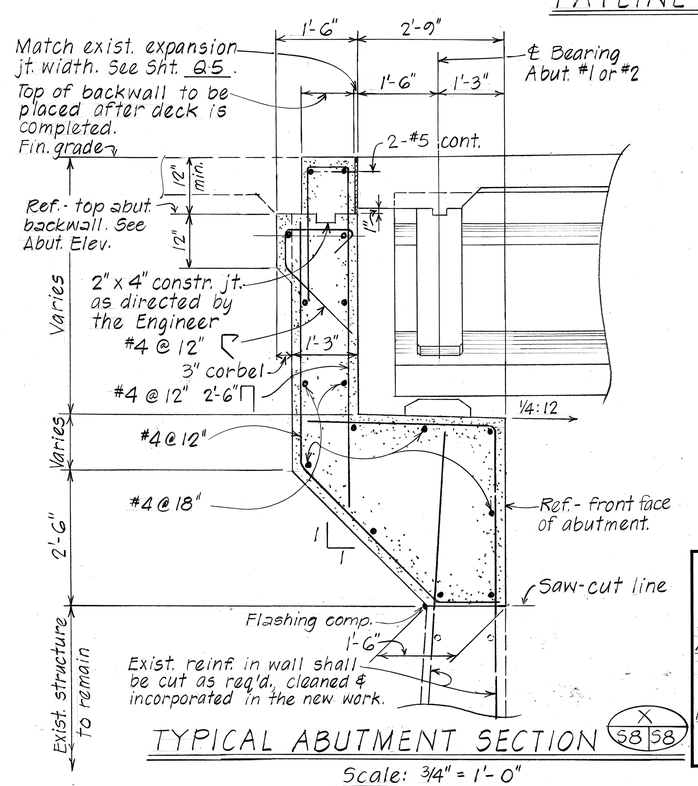

TYPICAL ABUTMENT SECTION X 58 58
Scale: 3/4" = 1'-0"

STATE OF HAWAII
DEPARTMENT OF TRANSPORTATION
HIGHWAYS DIVISION
HONOULIULI STREAM BRIDGE WIDENING
ABUTMENT ① & ② - PLAN & ELEVATION
TYPICAL ABUT. SECT., TYP. STRUCT. EXC. DETS.
INTERSTATE ROUTE H-1, PALAILAI I.C. TO KUNIA I.C. CONSTRUCTION OF ADDITIONAL LANES
F.A.I. PROJ. NO. IR-H1-1(180)
Scale: As Shown Date: July 1985

SHEET No. 58 OF 12 SHEETS

ORIGINAL PLAN		DATE
	SURVEY PLOTTED BY	
	DRAWN BY M.Y.	7/85
	TRACED BY	
NOTE BOOK	DESIGNED BY M.Y.	7/85
	QUANTITIES BY	
No.	CHECKED BY L.A., G.T.	7/85

FED. ROAD DIST. NO.	STATE	FED. AID PROJ. NO.	FISCAL YEAR	SHEET NO.	TOTAL SHEETS
HAWAII	HAW.	IR-HI-1(180)	1986	60	99

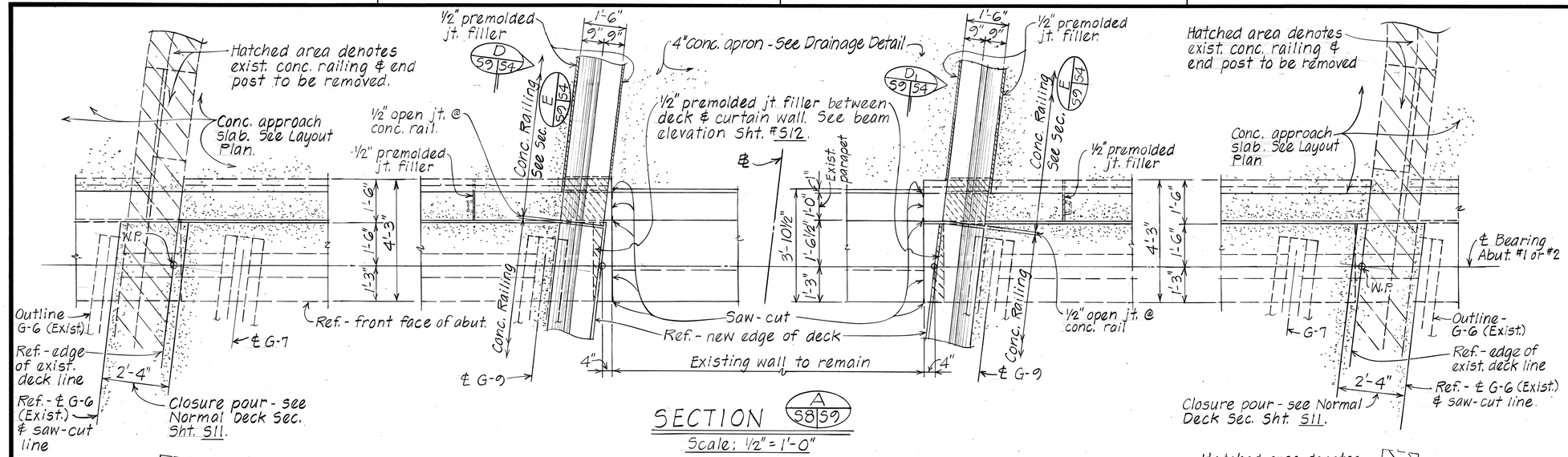

SECTION A 58/59

Scale: 1/2" = 1'-0"

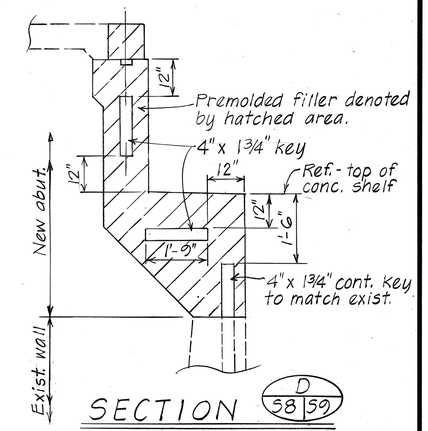

SECTION D 58/59

Scale: 1/2" = 1'-0"

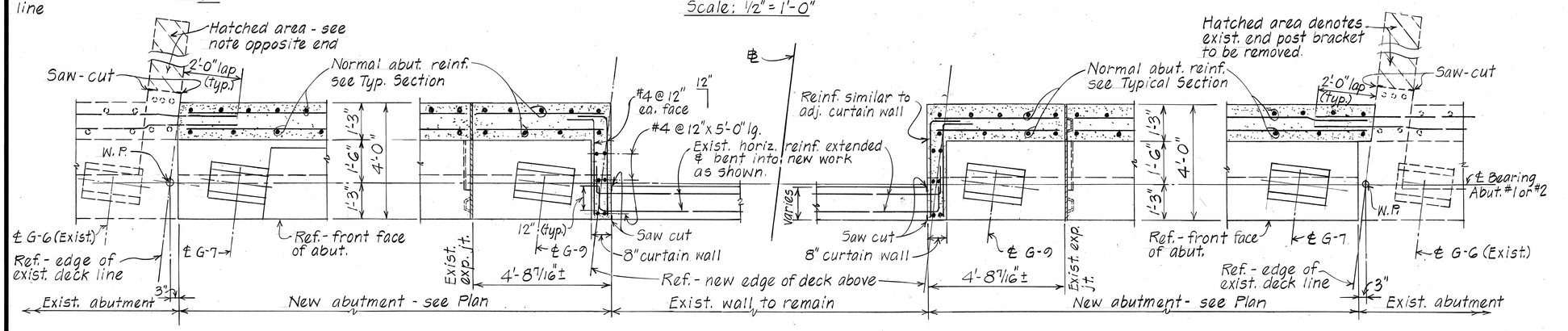

SECTION B 58/59

Scale 1/2" = 1'-0"

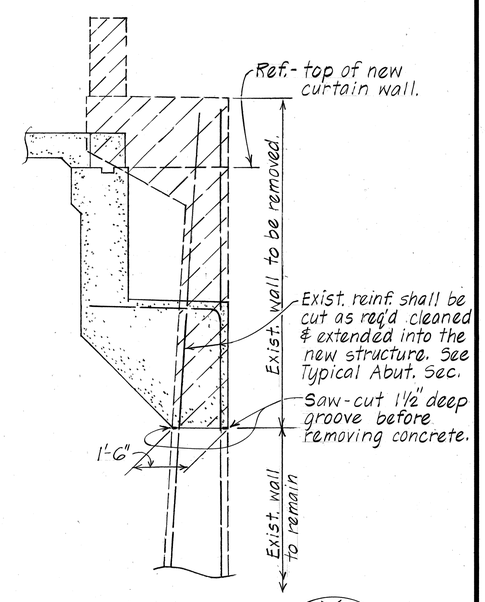

SECTION Y 58/59

Scale: 1/2" = 1'-0"

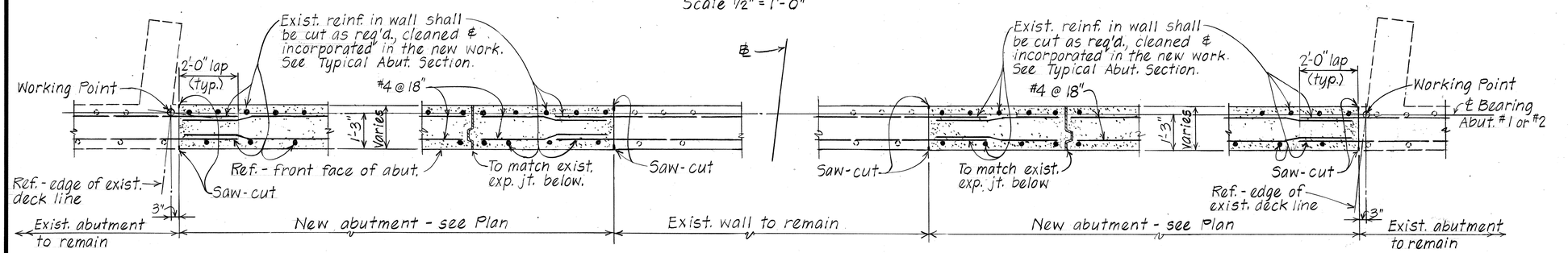

SECTION C 58/59

Scale: 1/2" = 1'-0"

STATE OF HAWAII
DEPARTMENT OF TRANSPORTATION
HIGHWAYS DIVISION

HONOULIULI STREAM BRIDGE WIDENING

ABUTMENT ① & ② SECTIONS

INTERSTATE ROUTE H-1, PALAILAI I.C. TO KUNIA I.C. CONSTRUCTION OF ADDITIONAL LANES

F.A.I. PROJ. NO. IR-HI-1(180)

Scale: As Shown Date: July 1985

SHEET No. 50 OF 12 SHEETS

ORIGINAL PLAN			DATE
	SURVEY PLOTTED BY		
	DRAWN BY	A.Y.	7/85
	TRACED BY		
NOTE BOOK	DESIGNED BY	M.Y.	7/85
	QUANTITIES BY		
No.	CHECKED BY	L.A., G.T.	7/85

FED. ROAD DIST. NO.	STATE	FED. AID PROJ. NO.	FISCAL YEAR	SHEET NO.	TOTAL SHEETS
HAWAII	HAW.	12-H1-1(189)	1986	61	99

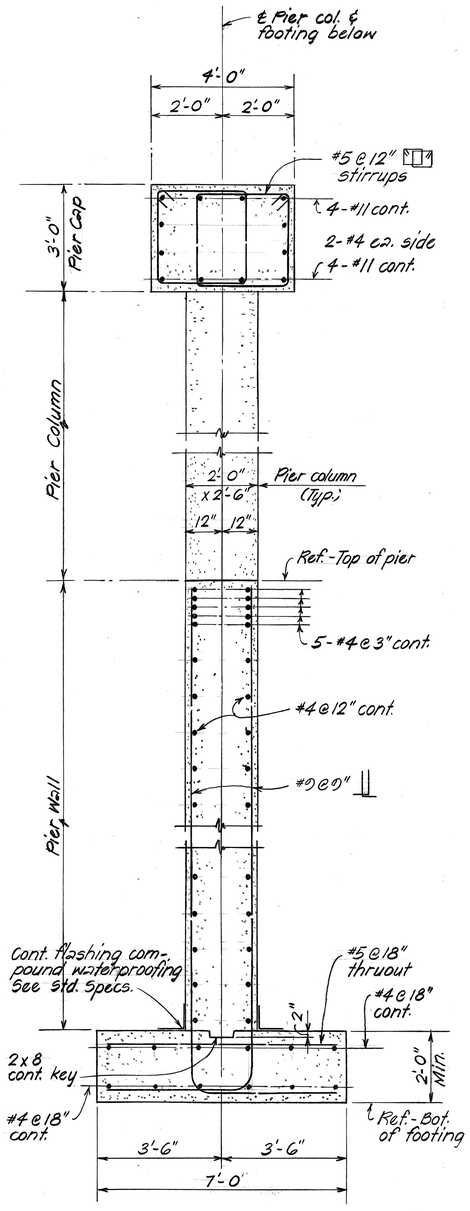

TYPICAL PIER SECTION (B / 510 510)

Scale: 1/2" = 1'-0"

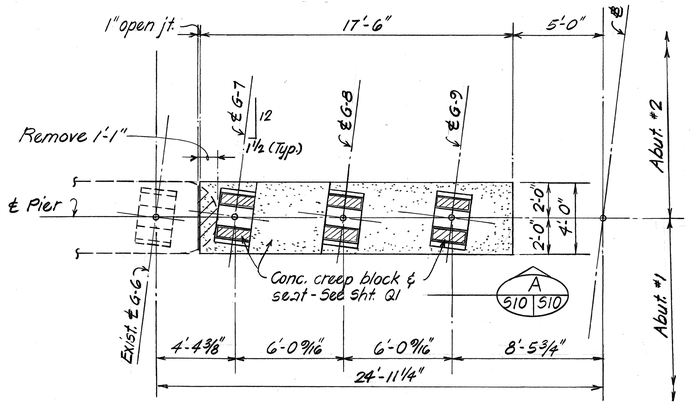

PLAN - PIER

Scale: 1/4" = 1'-0"

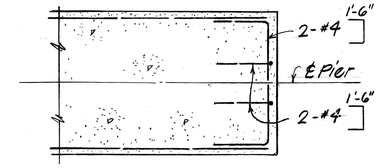

PLAN - TYPICAL PIER CAP NOSING

Scale: 1/2" = 1'-0"

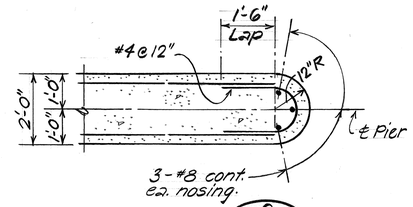

SECTION (C / 510 510)

Scale: 1/2" = 1'-0"

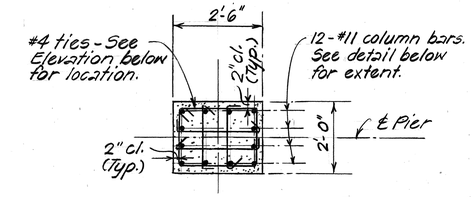

SECTION (D / 510 510)

Scale: 1/2" = 1'-0"

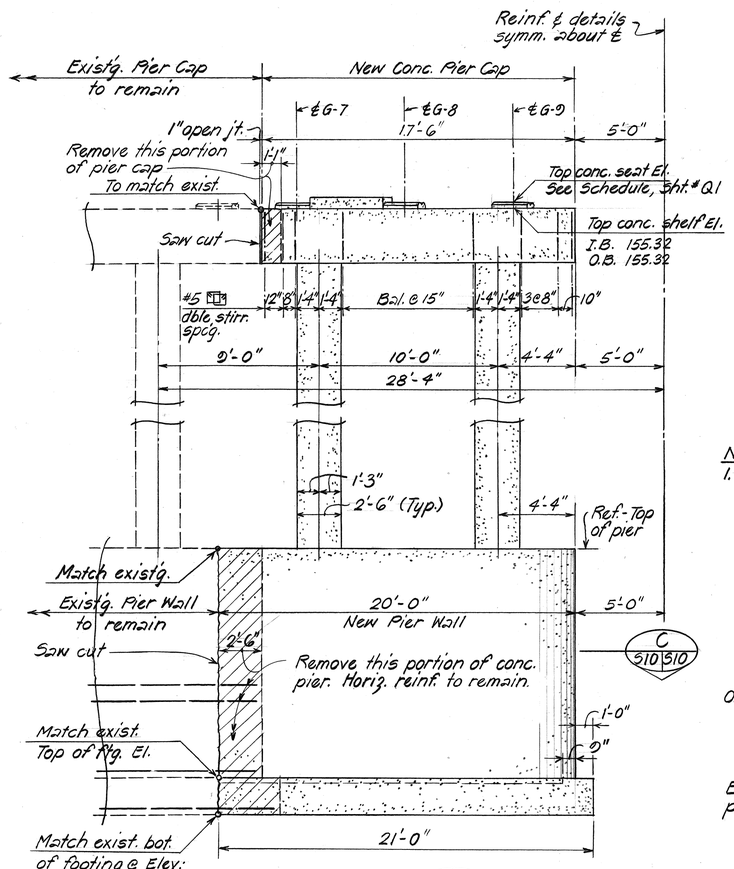

ELEVATION (A / 510 510)

Scale: 1/4" = 1'-0"

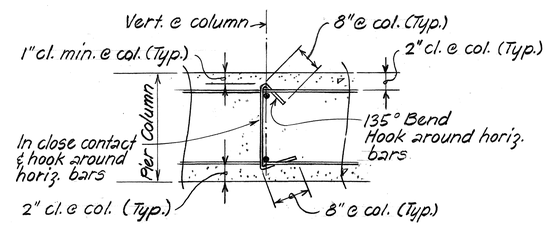

TIE BAR DETAIL (T / 510 510)

Not to Scale

NOTE:

1. Hatched area shown thus /// denotes limit of structure excavation payline.

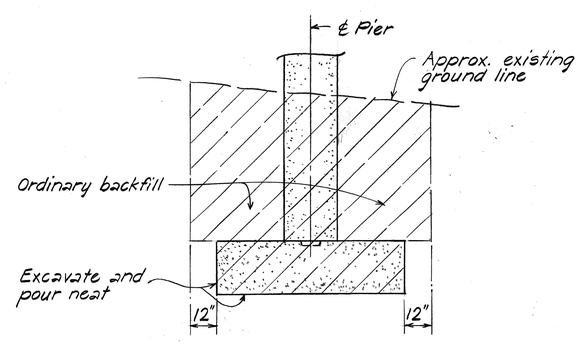

STRUCTURE EXCAVATION PAYLINE AT PIER

Not to Scale

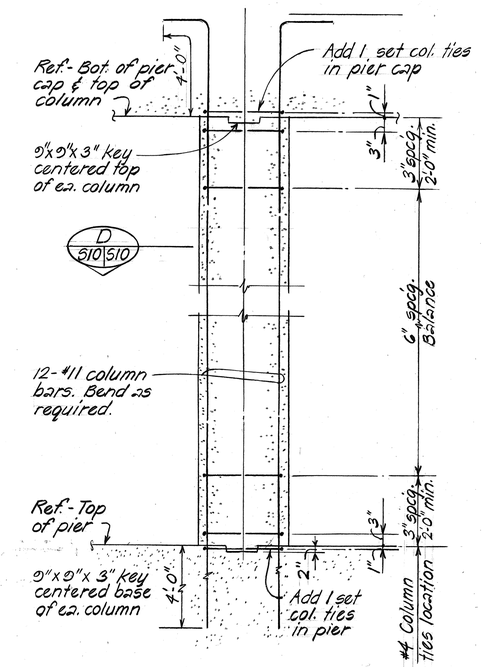

TYPICAL PIER COLUMN DETAIL

Scale: 1/2" = 1'-0"

ORIGINAL PLAN		DATE
	SURVEY PLOTTED BY T.K.M.	7/86
	DRAWN BY	
NOTE BOOK	TRACED BY M.Y.	7/86
	DESIGNED BY	
No.	QUANTITIES BY	
	CHECKED BY L.A.G.T.	7/86

STATE OF HAWAII
DEPARTMENT OF TRANSPORTATION
HIGHWAYS DIVISION

HONOULIULI STREAM BRIDGE WIDENING

PIER DETAILS

INTERSTATE ROUTE H-1, PALAILAI I.C. TO KUNIA I.C. CONSTRUCTION OF ADDITIONAL LANES
F.A.I. PROJ. NO. 12-H1-1(189)

Scale: As Shown Date: July 1985

SHEET No. 510 OF 12 SHEETS

FED. ROAD DIST. NO.	STATE	FED. AID PROJ. NO.	FISCAL YEAR	SHEET NO.	TOTAL SHEETS
HAWAII	HAW.	IR-H1-1(18D)	1986	62	99

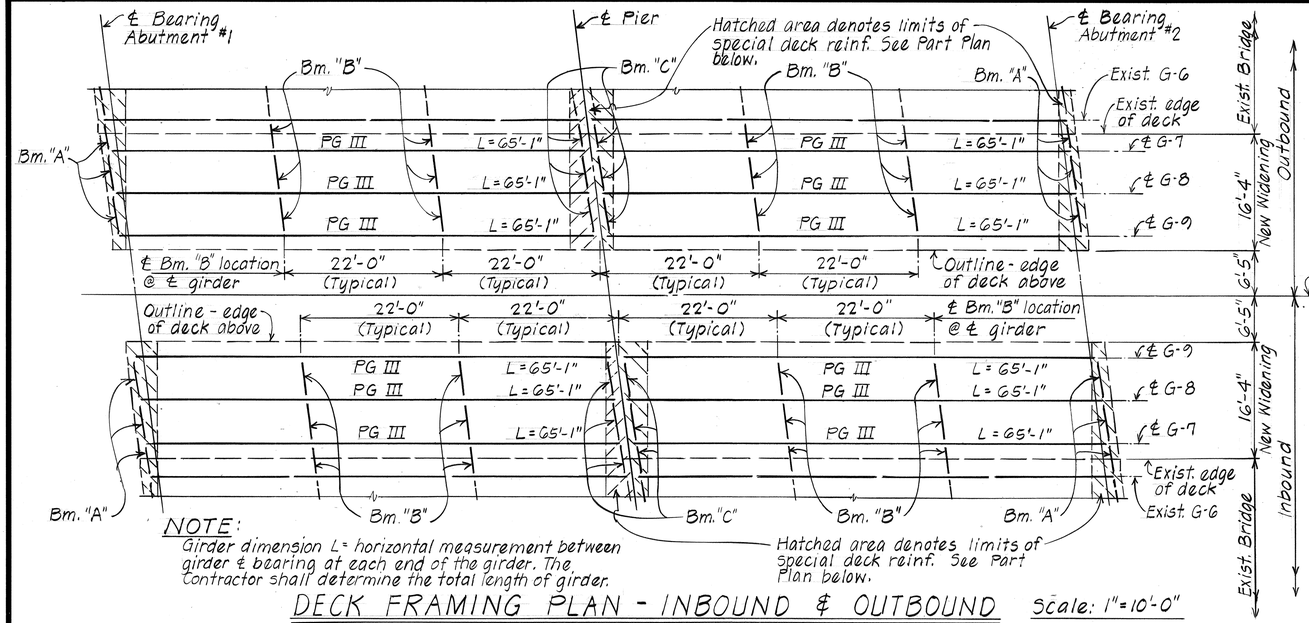

DECK FRAMING PLAN - INBOUND & OUTBOUND

Scale: 1"=10'-0"

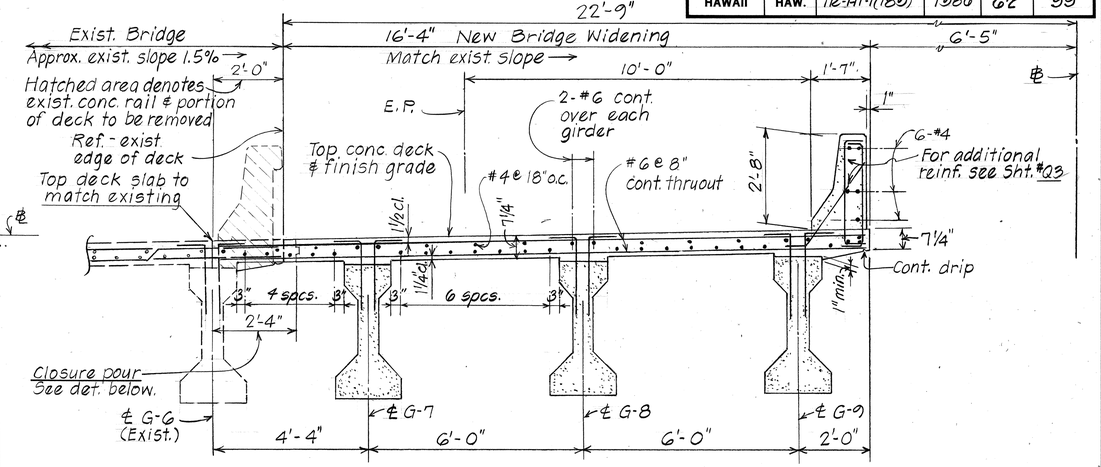

NORMAL DECK SECTION - OUTBOUND BRIDGE AS SHOWN

INBOUND BRIDGE SIMILAR EXCEPT OPPOSITE HAND

Scale: ½" = 1'-0"

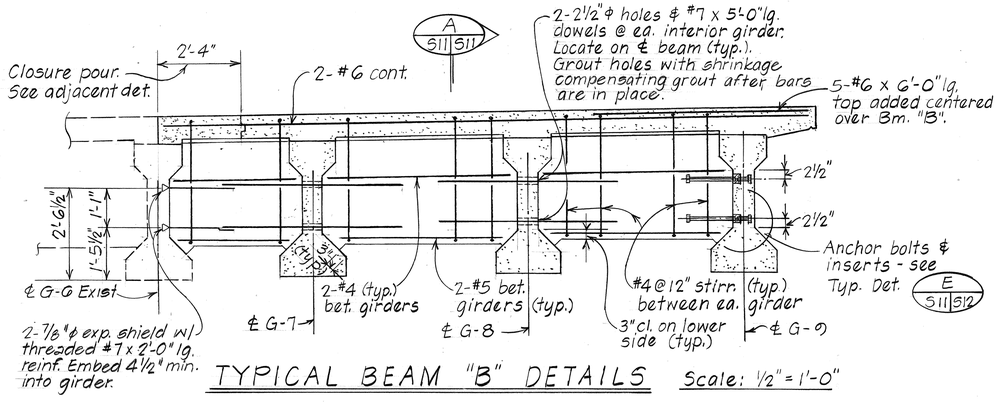

TYPICAL BEAM "B" DETAILS

Scale: ½" = 1'-0"

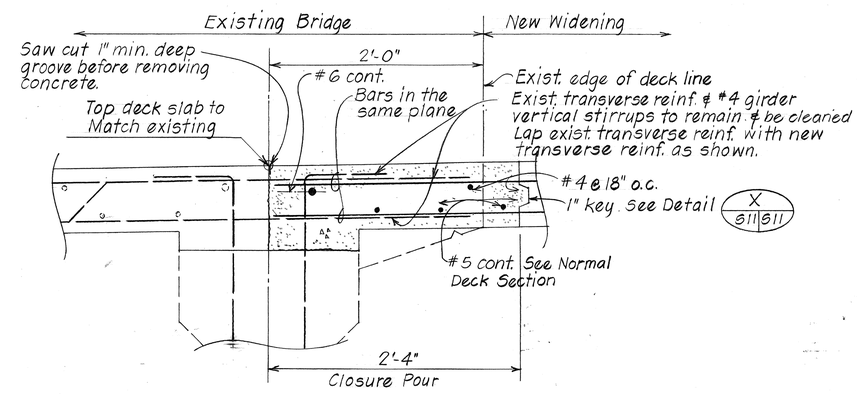

TYPICAL CLOSURE POUR DETAIL

Scale: 1½" = 1'-0"

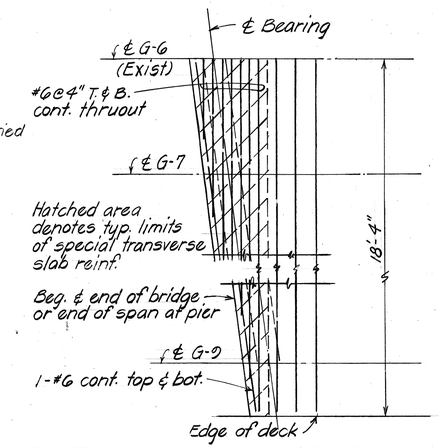

PART PLAN - SPECIAL DECK REINF. AT ABUTMENTS & PIER

Not to Scale

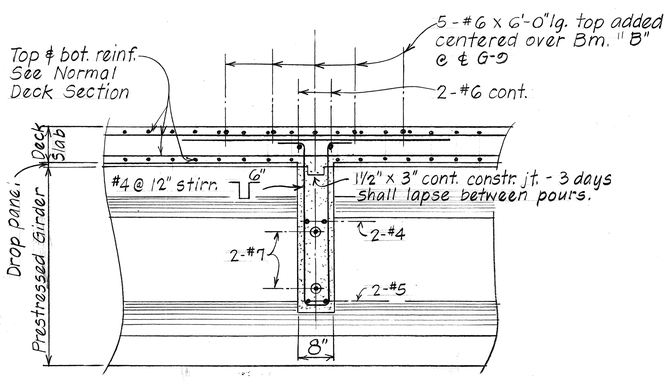

SECTION A S11 S11

Scale: ½" = 1'-0"

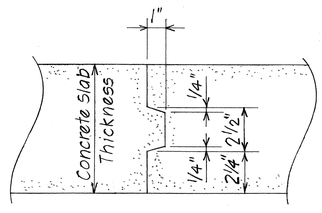

DETAIL X S11 S11

Scale: 3" = 1'-0"

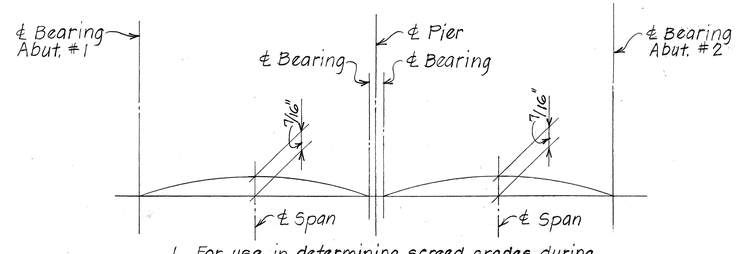

1. For use in determining screed grades during deck pour at new edge of deck.
2. Match grades at existing deck edge.

NEW EDGE OF DECK CAMBER DIAGRAM

Not to scale

ORIGINAL PLAN		DATE
	SURVEY PLOTTED BY	
	DRAWN BY N.Y., L.M.A.	7/85
NOTE BOOK	TRACED BY	
	DESIGNED BY M.Y.	7/85
	QUANTITIES BY	
No.	CHECKED BY L.A., G.T.	7/85

STATE OF HAWAII
DEPARTMENT OF TRANSPORTATION
HIGHWAYS DIVISION

HONOULIULI STREAM BRIDGE WIDENING

NORMAL DECK SECTION, DECK FRAMING PLAN, BEAM "B"

INTERSTATE ROUTE H-1, PALAILAI I.C. TO KUNIA I.C. CONSTRUCTION OF ADDITIONAL LANES

F.A.I. PROJ. NO. IR-H1-1(18D)

Scale: As Shown Date: July 1985

SHEET No. S11 OF 12 SHEETS

FED. ROAD DIST. NO.	STATE	FED. AID PROJ. NO.	FISCAL YEAR	SHEET NO.	TOTAL SHEETS
HAWAII	HAW.	IR-H1-1(189)	1986	63	99

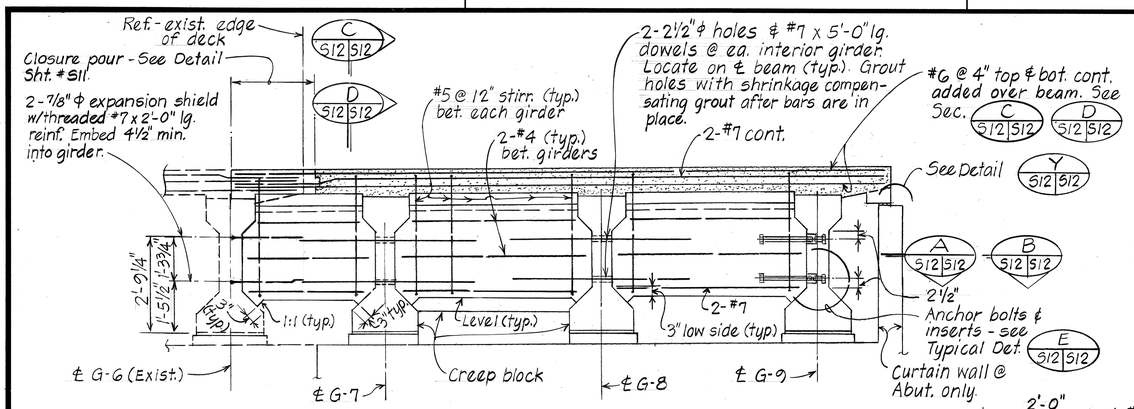

TYPICAL ELEVATION - BEAM "A" AS SHOWN
BEAM "C" SIMILAR EXCEPT AS NOTED OTHERWISE

Scale: ½" = 1'-0"

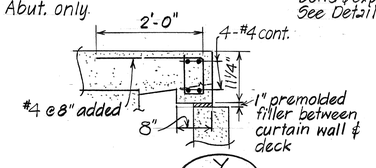

DETAIL Y S12/S12
AT ABUTMENTS ONLY

Scale: 3/4" = 1'-0"

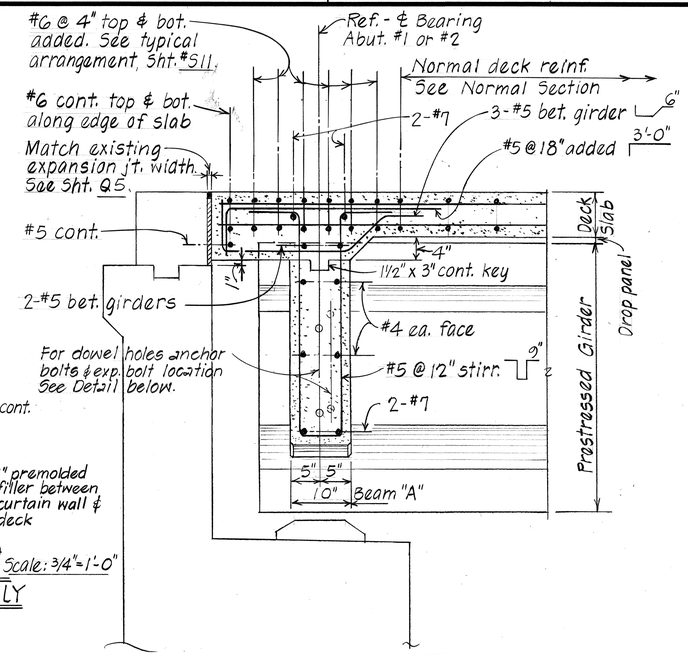

SECTION C S12/S12

Scale: 1" = 1'-0"

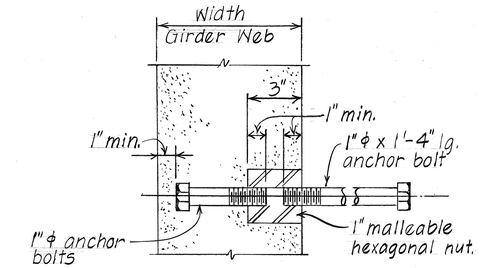

Note: Inserts & anchor bolts to be incidental to concrete.

S11 E S12/S12 TYPICAL INSERT DETAIL

Scale: 3" = 1'-0"

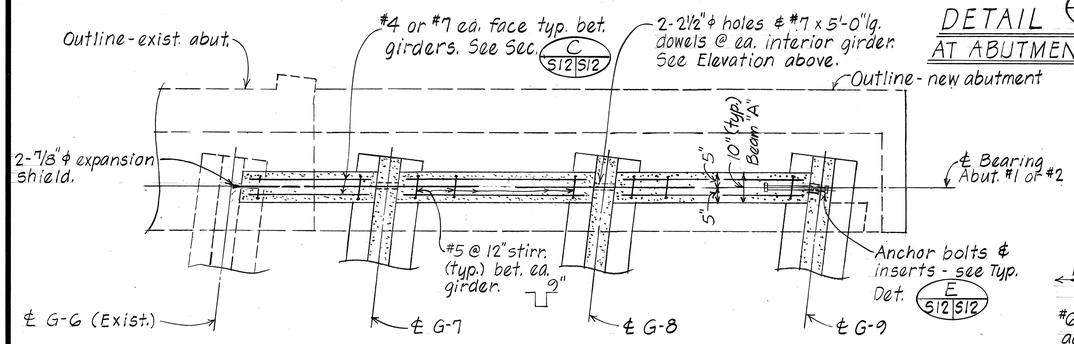

BEAM "A" - SECTION A S12/S12

Scale: ½" = 1'-0"

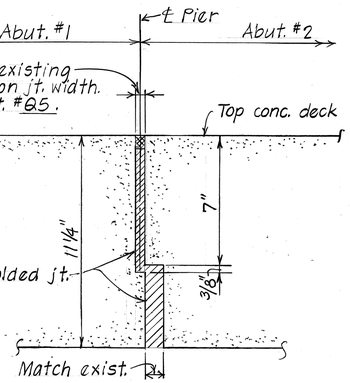

DETAIL F S12/S12

Scale: 3" = 1'-0"

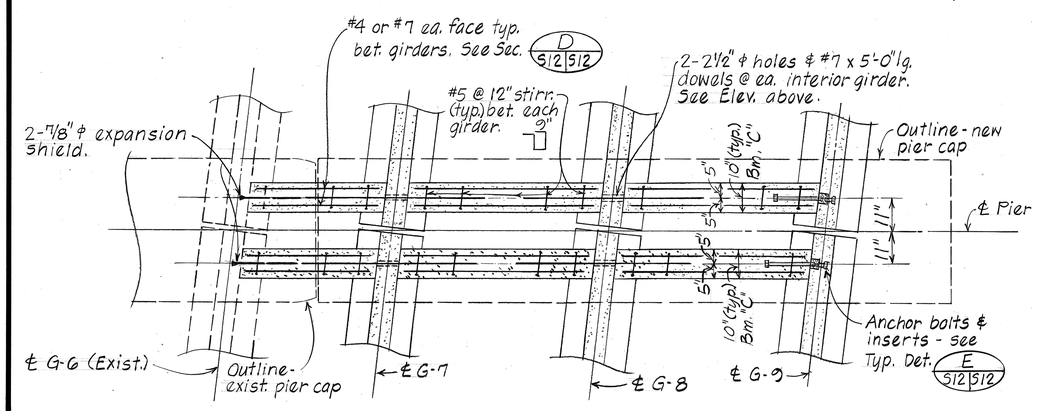

BEAM "C" - SECTION B S12/S12

Scale: ½" = 1'-0"

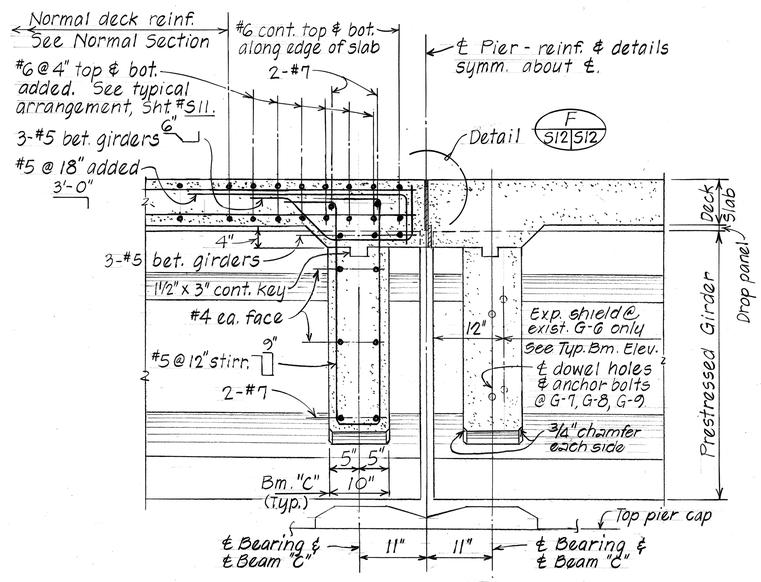

SECTION D S12/S12

Scale: 1" = 1'-0"

STATE OF HAWAII
DEPARTMENT OF TRANSPORTATION
HIGHWAYS DIVISION

HONOULIULI STREAM BRIDGE WIDENING

BEAM "A" & "C" DETAILS

INTERSTATE ROUTE H-1, PALAILAI I.C. TO KUNIA I.C. CONSTRUCTION OF ADDITIONAL LANES
F.A.I. PROJ. NO. IR-H1-1(189)

Scale: As Shown Date: July 1985

SHEET No. S12 OF 12 SHEETS

			DATE
ORIGINAL PLAN	SURVEY PLOTTED BY		
	DRAWN BY	M.K.	7/85
NOTE BOOK	TRACED BY		
	DESIGNED BY	M.Y.	7/85
No.	QUANTITIES BY		
	CHECKED BY	L.A., G.T.	7/85

FED. ROAD DIST. NO.	STATE	FED. AID PROJ. NO.	FISCAL YEAR	SHEET NO.	TOTAL SHEETS
HAWAII	HAW.	IR-HI-1(180)	1986	64	99

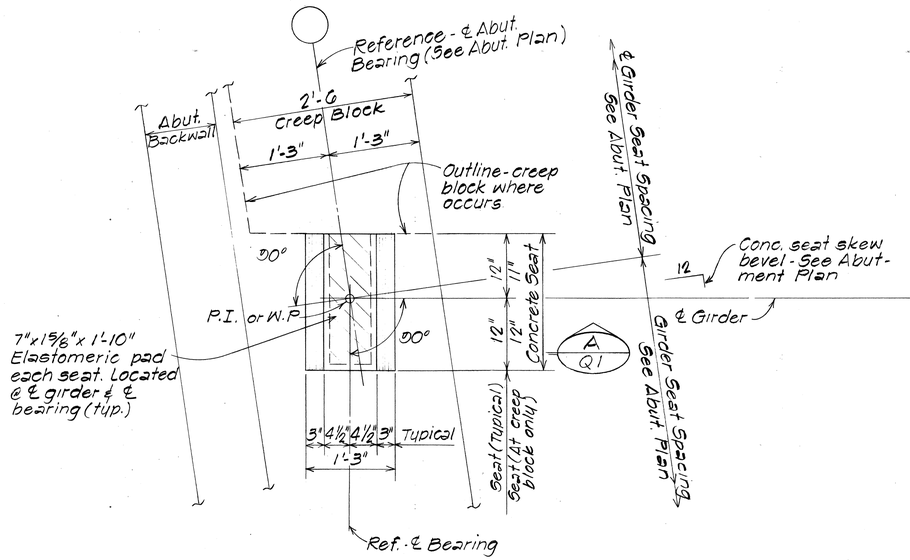

AT ABUTMENT

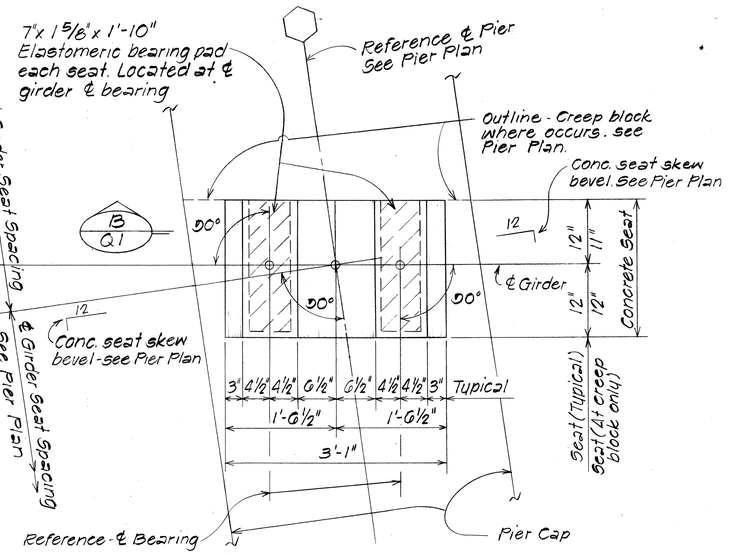

AT PIER CAP

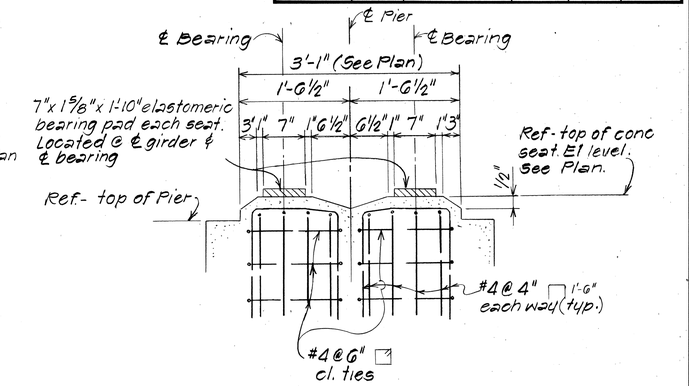

SECTION B/Q1

Scale: 1" = 1'-0"

NOTE:
All bearing seat elevation are based on steel laminated elastomeric bearing pads. If fabric laminations are used in lieu of steel, appropriate revisions shall be made to reflect the reduction in thickness of the bearing pads. Any such revision shall be approved by the Engineer.

PART PLAN

Scale: 1" = 1'-0"

TOP CONCRETE SEAT ELEVATION

	LOCATION	ABUT. 1 @ ℄ BEARING	PIER @ ℄ BEARING	PIER @ ℄ BEARING	ABUT. 2 @ ℄ BEARING
	GIRDER NO.				
OUTBOUND	G-7	155.30	155.34	155.35	155.57
	G-8	155.30	155.43	155.44	155.66
	G-9	155.48	155.53	155.53	155.75
INBOUND	G-9	155.48	155.53	155.53	155.76
	G-8	155.30	155.44	155.45	155.68
	G-7	155.30	155.35	155.36	155.50

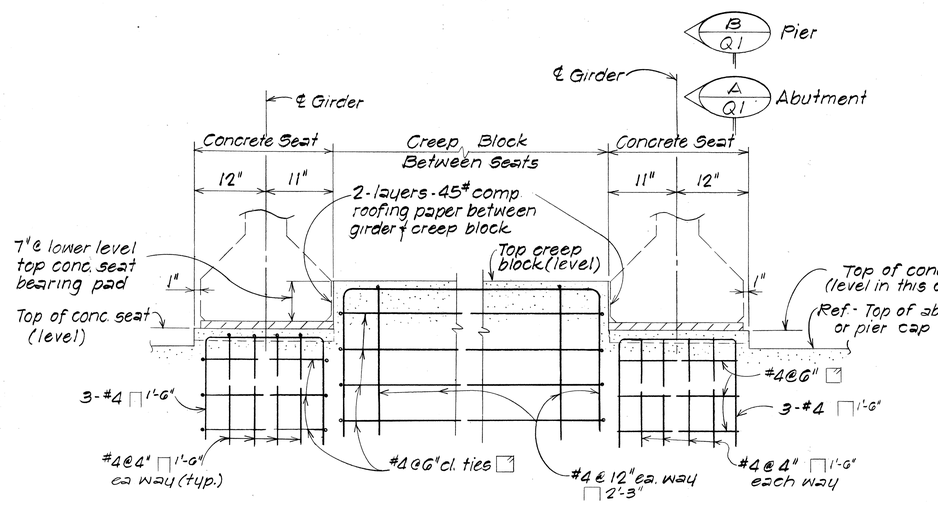

CONCRETE SEAT CREEP BLOCK CONCRETE SEAT

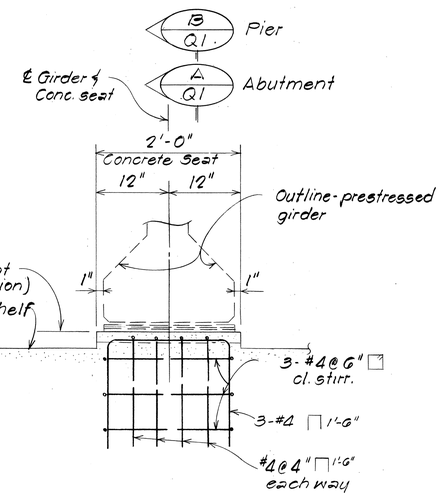

CONCRETE SEAT

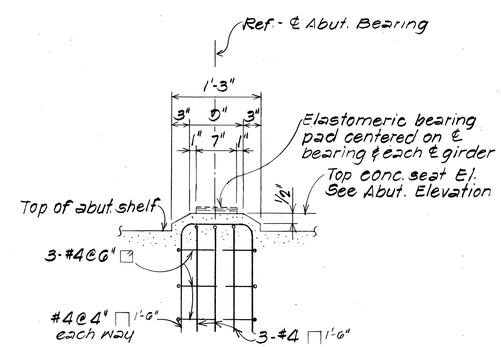

SECTION A/Q1

ELEVATION

Scale: 1" = 1'-0"

TYPICAL GIRDER CONCRETE SEAT DETAILS

		DATE
SURVEY PLOTTED BY		
DRAWN BY	SAK	7/85
TRACED BY		
DESIGNED BY	MJY	7/85
QUANTITIES BY		
CHECKED BY	L.A. G.T.	7/85

ORIGINAL PLAN — NOTE BOOK No.

STATE OF HAWAII
DEPARTMENT OF TRANSPORTATION
HIGHWAYS DIVISION

TYPICAL DETAILS
GIRDER CONCRETE SEAT & CREEP BLOCK DETAILS

FAI. PROJ. NO. IR-HI-1(180)

Scale: As Shown Date: July 1985

SHEET No. Q1 OF 5 SHEETS

FED. ROAD DIST. NO.	STATE	FED. AID PROJ. NO.	FISCAL YEAR	SHEET NO.	TOTAL SHEETS
HAWAII	HAW.	IR-HI-1(189)	1986	65	99

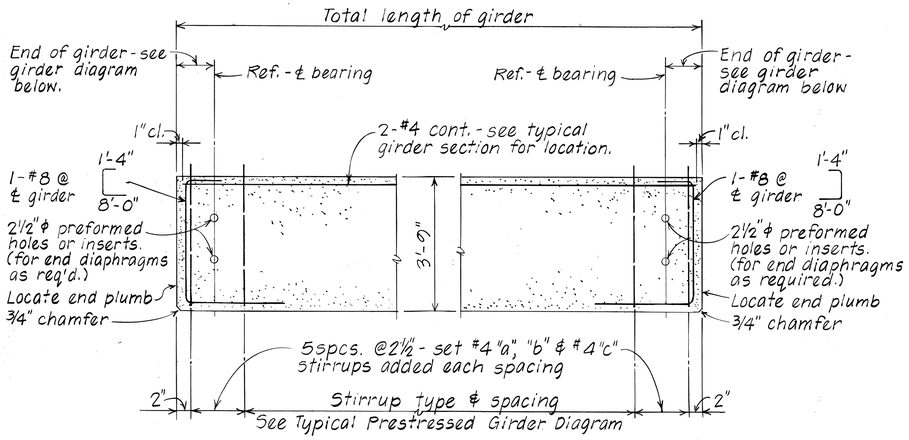

ELEVATION - TYPE PG-III GIRDER END DETAILS

Not to Scale

BUNDLING OF PRESTRESSING REINFORCEMENT

ARRANGEMENT AND CLEARANCE FOR PRETENSIONED STRANDS

1. Strands may be bundled in groups as shown.
2. The minimum distance "S" between groups or individual strands 2" for ½" strands.
3. "S" is measured between centers of adjacent strands.

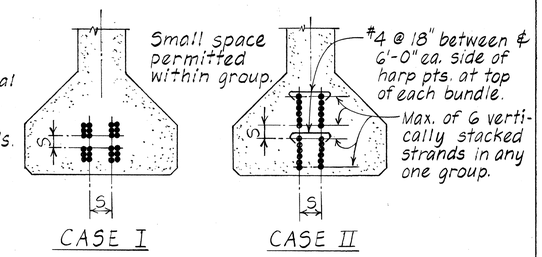

Reference Note:

For girder type & location, see Deck Framing Plan Sht. S11.

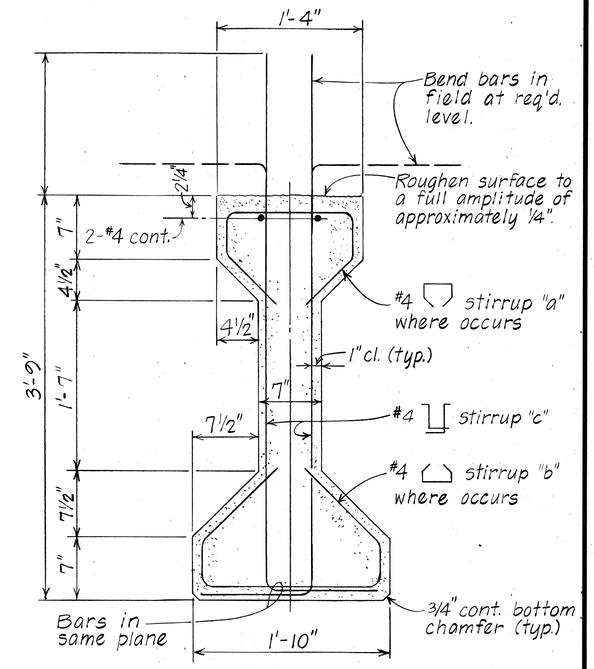

TYPICAL PRESTRESSED CONCRETE GIRDER

Scale: 1½" = 1'-0"

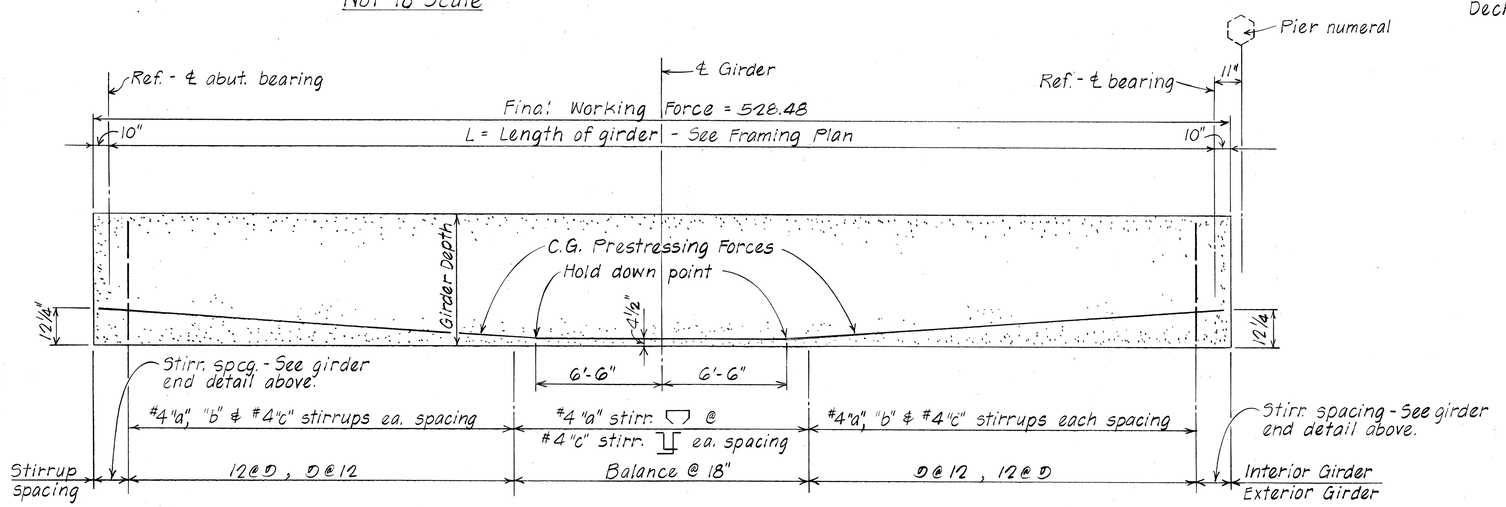

DIAGRAM - TYPICAL PRESTRESSED GIRDER DETAIL TYPE PG-III

Not to Scale

PRESTRESSED CONCRETE GIRDERS:

$f'c$ = 5,500 psi @ 28 days
f_{ci} = 4,000 psi @ transfer

PRESTRESSED STRANDS

A. ½"ϕ 270 ksi, 7 wire stressed - relieved strands (ASTM A416)
Total losses other than friction = 45,000 psi.

B. Allowable stresses in strands shall be in accordance with Design Specifications. (See General Structure Notes)

NOTES

1. All strand patterns shall be approved by the Engineer.
2. Forms must be removed and the beams inspected before strands are out.
3. For additional holes and inserts in prestressed girders for beam connections refer to corresponding beam details. See Sht. #S11 & S12.
4. For additional prestressed girder details not covered by these drawings, refer to corresponding detail plans.
5. The calculated camber includes the effect of the initial prestress force and the weight of the girder upon removal from the prestressing bed. Calculated camber values shown do not account for any camber growth of the girder. The actual camber at time of deck pour shall not exceed the calculated camber by more than 100%. Calculated midspan camber = 7/8 inch. Contractor shall submit record of cambers to the Engineer. This record shall include cambers at time of detensioning, delivery, and deck pour.

ORIGINAL PLAN	SURVEY PLOTTED BY	DATE
	DRAWN BY N.Y.	
NOTE BOOK	TRACED BY	
	DESIGNED BY	
No.	QUANTITIES BY	
	CHECKED BY	

STATE OF HAWAII
DEPARTMENT OF TRANSPORTATION
HIGHWAYS DIVISION

TYPICAL DETAILS

PRESTRESSED GIRDER
(TYPE PG-III)

F.A.I. PROJ. NO. IR-HI-1(189)

Scale: As Shown Date:

SHEET No. Q2 OF 5 SHEETS

FED. ROAD DIST. NO.	STATE	FED. AID PROJ. NO.	FISCAL YEAR	SHEET NO.	TOTAL SHEETS
HAWAII	HAW.	IR-HI-1(189)	1986	66	99

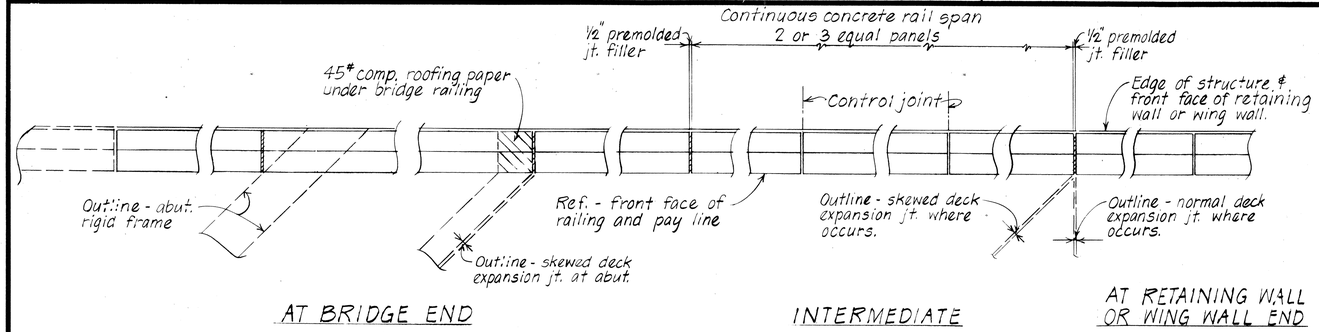

RAILING LAYOUT PLAN

Scale: 3/8" = 1'-0"

** Railing shall be constructed on deck slope with 2 or 3 equal panels of 30'-0" max. length within each rail span. Locate control joints at interior panel points (typical) Concrete railing to receive Class 2 rubbed finish. See specifications.

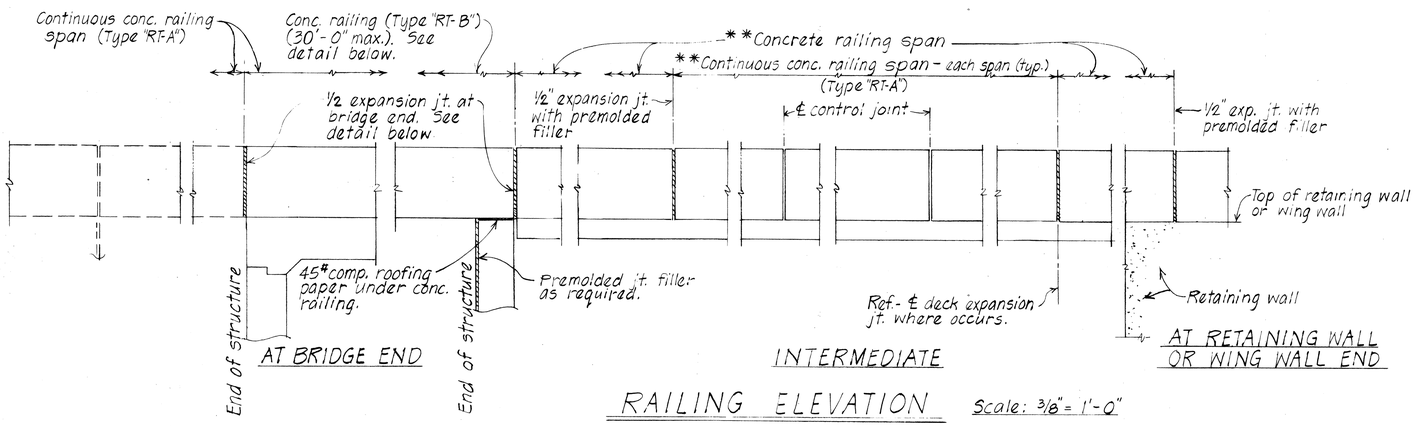

RAILING ELEVATION

Scale: 3/8" = 1'-0"

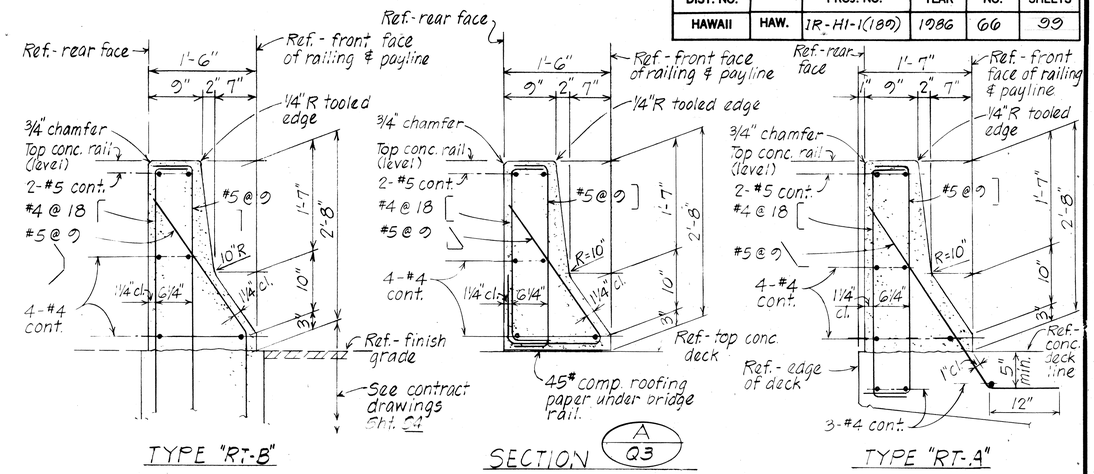

TYPICAL SECTIONS - CONCRETE BRIDGE RAILING

Scale: 1" = 1'-0"

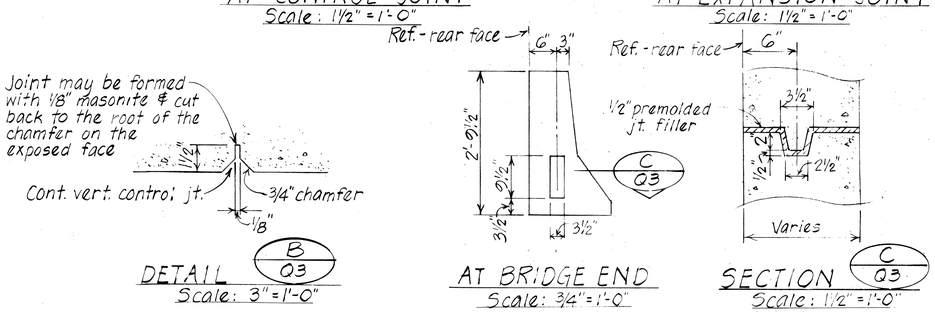

TYPICAL JOINT DETAILS

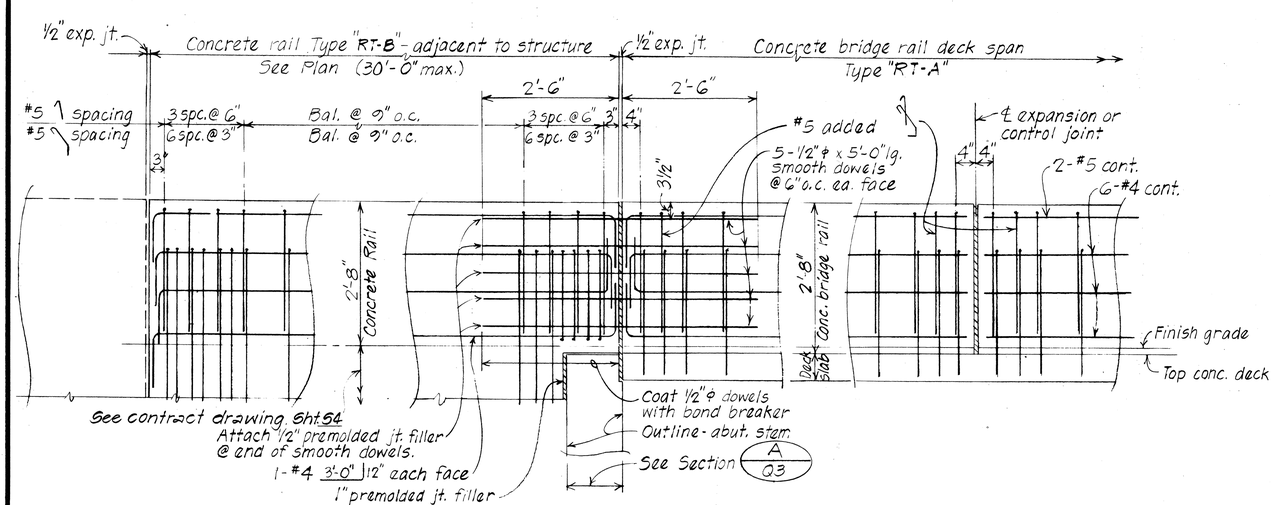

PART ELEVATION - CONCRETE RAILING REINFORCEMENT

Scale: 3/4" = 1'-0"

ORIGINAL PLAN	SURVEY PLOTTED BY	DATE
	DRAWN BY	"
	TRACED BY	"
NOTE BOOK	DESIGNED BY	"
No.	QUANTITIES BY	"
	CHECKED BY	"

STATE OF HAWAII
DEPARTMENT OF TRANSPORTATION
LAND TRANSPORTATION FACILITIES DIVISION

TYPICAL DETAILS
CONCRETE BRIDGE RAILING
BARRIER TYPE

F.A.I. PROJ. NO. IR-HI-1(189)

Scale: As Shown Date:

SHEET No. Q3 OF 5 SHEETS

FED. ROAD DIST. NO.	STATE	FED. AID PROJ. NO.	FISCAL YEAR	SHEET NO.	TOTAL SHEETS
HAWAII	HAW.	IR-HI-1(189)	1986	67	99

CURVE DATA
Δ = 40° 06' 25"
R = 10'-0"
Lc = 7'-0"

** Dimensions as detailed except as otherwise noted on detail drawings.

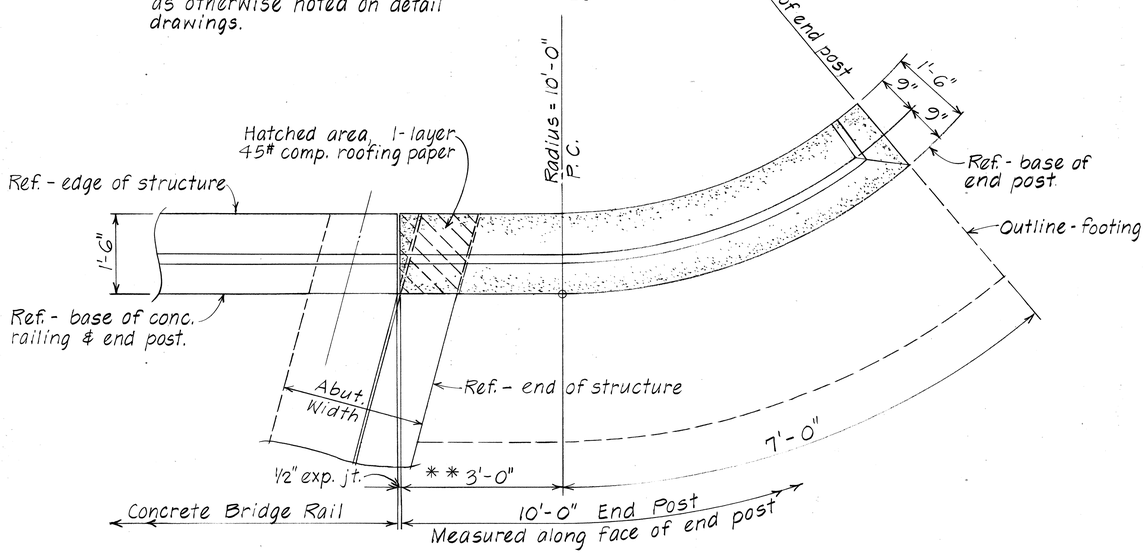

PLAN
Scale: 3/4" = 1'-0"

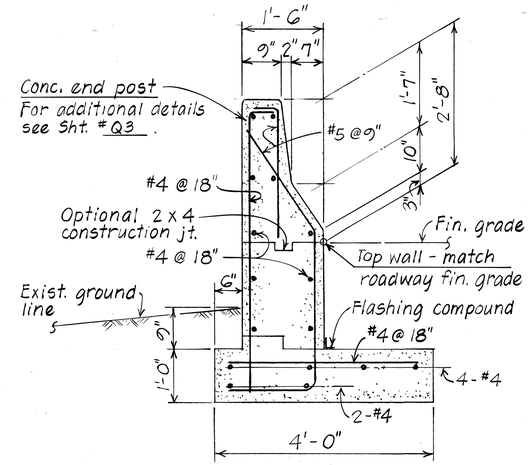

TYPICAL SECTION

NOTE - Hatched Area:
1. Hatched area shown thus /// denotes limits of structure excavation pay line. All other excavation shall be roadway excavation.
2. Hatched area shown thus \\\ denotes limits of structure backfill (or ordinary backfill).

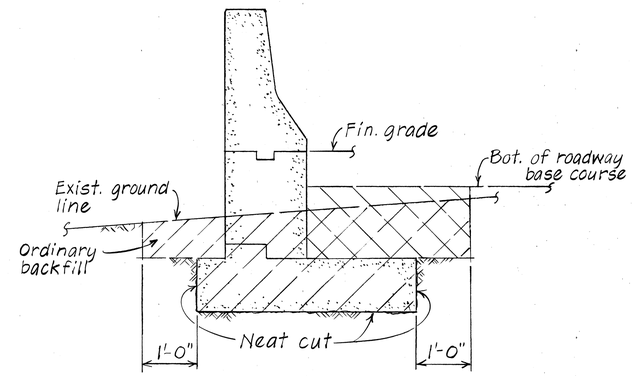

TYPICAL STRUCTURE EXCAVATION & BACKFILL PAY LIMITS DETAIL

TYPICAL END POST DETAILS
Scale: 3/4" = 1'-0"

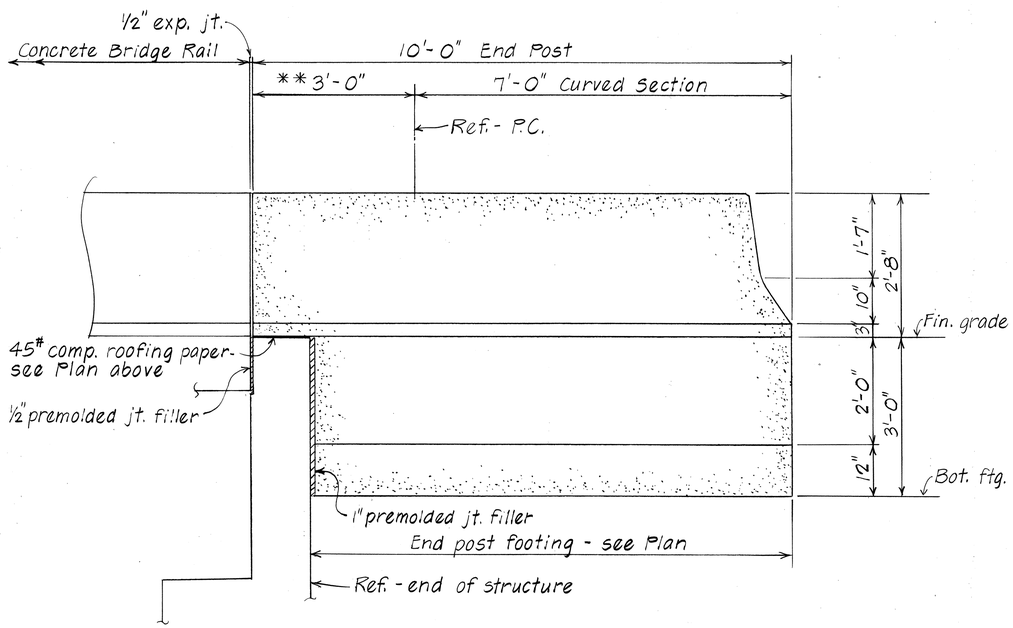

ELEVATION
Scale: 3/4" = 1'-0"

ORIGINAL PLAN	SURVEY PLOTTED BY	DATE
	DRAWN BY	
	TRACED BY	
NOTE BOOK	DESIGNED BY	
	QUANTITIES BY	
No.	CHECKED BY	

STATE OF HAWAII
DEPARTMENT OF TRANSPORTATION
HIGHWAYS DIVISION

TYPICAL DETAILS
CONCRETE END POST

F.A.I. PROJ. NO. IR-HI-1(189)

Scale: As Shown Date: July 1985

SHEET No. Q4 OF 5 SHEETS

FED. ROAD DIST. NO.	STATE	FED. AID PROJ. NO.	FISCAL YEAR	SHEET NO.	TOTAL SHEETS
HAWAII	HAW.	IR-HI-1(189)	1986	68	99

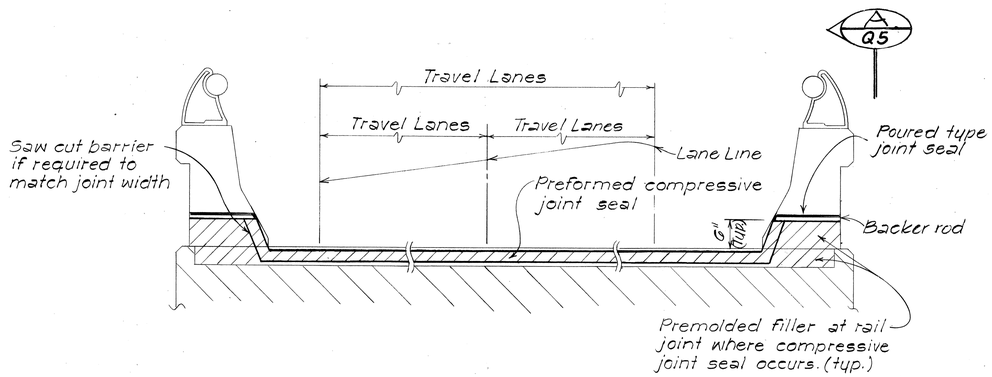

TYPICAL SECTION AT JOINT SEAL

Scale: 3/4" = 1'-0"

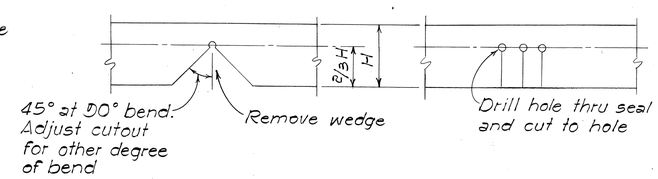

DOWNTURN UPTURN

DETAIL OF SEAL AT BEND

Not to Scale

NOTES:

1. Maintenance of Traffic and Traffic Control - See Subsection 104.04 of the Standard Specifications and Section 645 of the Special Provisions.
2. Saw cutting of concrete & the poured type joint seal shall be incidental to the preformed joint seal & will not be paid for separately.

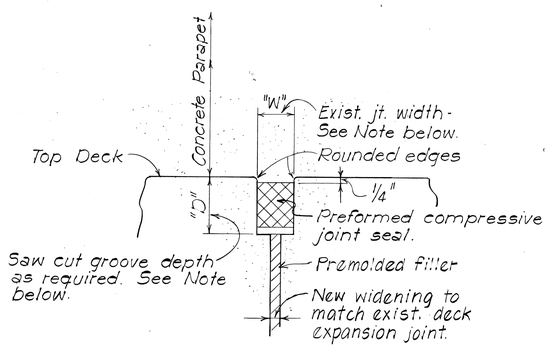

HONOULIULI STREAM BRIDGE

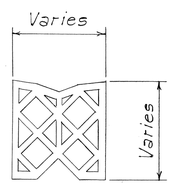

SEAL DETAIL

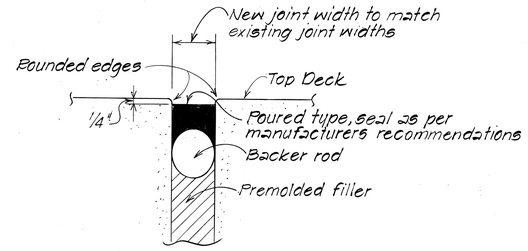

PALEHUA SEPARATION

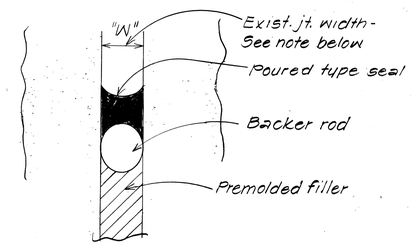

SECTION A/Q5

@ CONCRETE RAIL

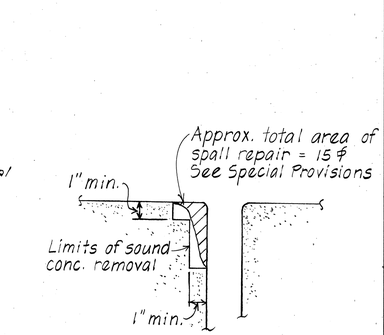

TYPICAL CORNER SPALLS REPAIR AT EXISTING DECK JOINTS

Not to Scale

REPLACEMENT OF EXISTING EXPANSION JOINT SEAL DETAILS

Not to Scale

NOTE:

"W" - Existing joint width. This width shall also be the installation width of the new preformed joint seal. The new preformed joint seal size shall be determined by this installation width as recommended by the manufacturer and shall be approved by the Engineer. This width "W" shall be uniform through-out & shall be saw cut, if required, as approved by the Engineer.

"D" - Groove depth as recommended by the manufacturer. This depth shall be obtained by saw cutting, as required.

ORIGINAL PLAN	SURVEY PLOTTED BY	DATE
	DRAWN BY	
NOTE BOOK	TRACED BY	
	DESIGNED BY	
No.	QUANTITIES BY	
	CHECKED BY	

STATE OF HAWAII
DEPARTMENT OF TRANSPORTATION
HIGHWAYS DIVISION

TYPICAL DETAILS

REPLACEMENT OF BRIDGE DECK JOINT SEALS, GENERAL NOTES & SEAL DETAILS

F.A.I. PROJ. NO. IR-HI-1(189)

Scale: As Noted Date: July 1985

SHEET No. Q5 OF 5 SHEETS

FED. ROAD DIST. NO.	STATE	FED. AID PROJ. NO.	FISCAL YEAR	SHEET NO.	TOTAL SHEETS
HAWAII	HAW.	IR-H1-1(180)	1986	69	99

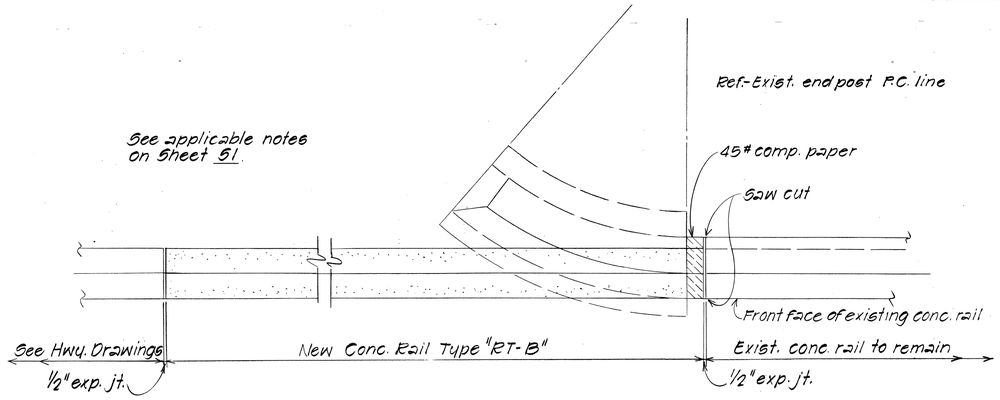

TYPICAL PART PLAN OF EXISTING & NEW CONCRETE RAILING FOR KUNIA SEPARATION

Scale: 1/2" = 1'-0"

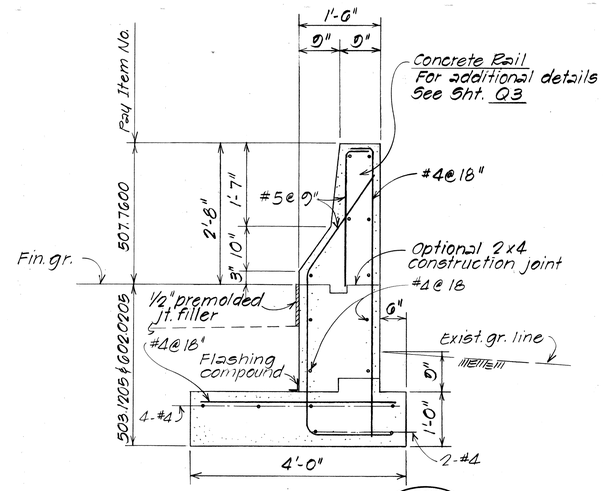

TYPICAL SECTION B / P1 P1

Scale: 3/4" = 1'-0"

ESTIMATED QUANTITIES

ITEM NO.	ITEM	UNIT	QUANTITIES
202.0443	Removal of end post for Kunia I.C. Structure	Lump Sum	(3 C.Y.)
206.6103	Structure excavation for concrete railing	Cu. Yd	13 C.Y.
503.1205	Concrete in footing for bridge railing	Lump Sum	(7 C.Y.)
507.7600	Concrete bridge railing (2'-8" traffic type)	Lin Ft.	30 L.F.
602.0205	Reinforcing steel in footing for bridge railing	Lump Sum	(450 Lbs)

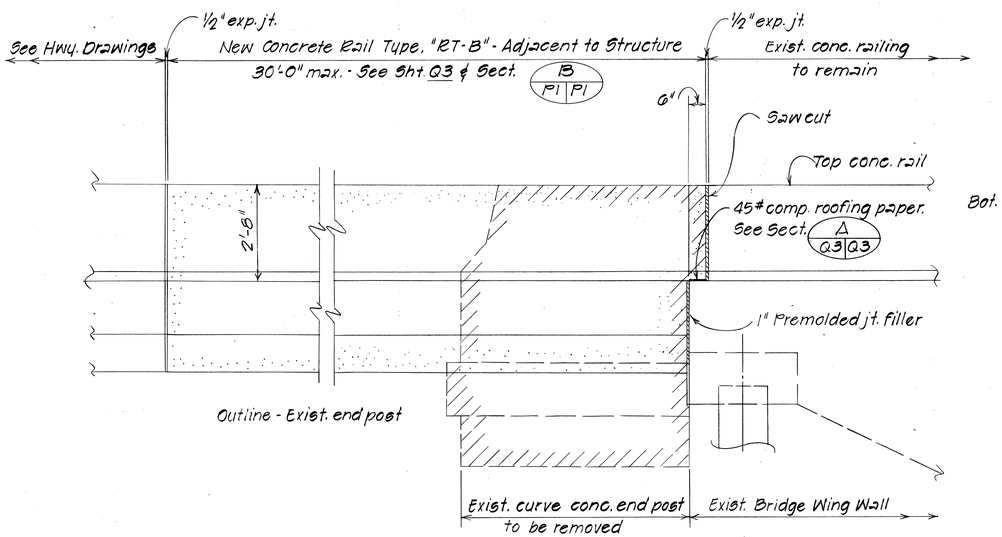

RAILING ELEVATION

Scale: 1/2" = 1'-0"

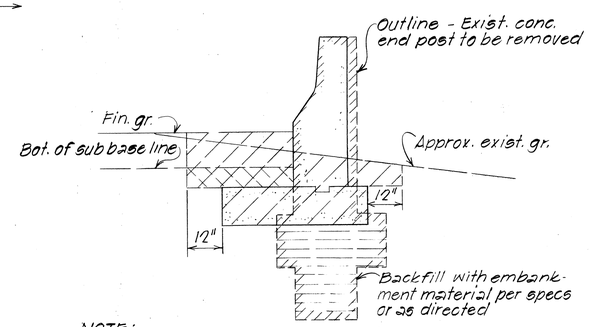

NOTE:
1. Hatched area shown thus ////// denotes limits of structure excavation payline all other excavation shall be roadway excavation.
2. Hatched area shown thus \\\\\\ denotes limits of structure backfill. Backfill shall be paid under Item 206.6103

TYPICAL END POST EXCAVATION PAYLINE & BACKFILL

Scale: 1/2" = 1'-0"

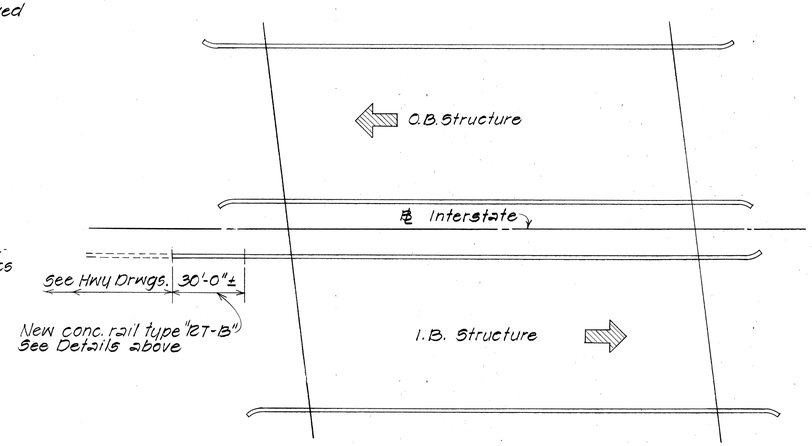

LOCATION PLAN - KUNIA I.C. STRUCTURE

Scale: 1" = 50'-0"

ORIGINAL PLAN	SURVEY PLOTTED BY	DATE
	DRAWN BY A.K.	7/85
	TRACED BY	" "
NOTE BOOK	DESIGNED BY M.Y.	7/86
	QUANTITIES BY	" "
No.	CHECKED BY L.A.G.T.	7/86

STATE OF HAWAII
DEPARTMENT OF TRANSPORTATION
HIGHWAYS DIVISION

KUNIA INTERCHANGE STRUCTURE
REPLACEMENT OF I.B. APPROACH BRIDGE RAIL
INTERSTATE ROUTE H-1, PALAILAI I.C. TO KUNIA I.C. CONSTRUCTION OF ADDITIONAL LANES
F.A.I. Proj. No. IR-H1-1(180)

Scale: As Shown Date: July 1985

SHEET No. P1 OF 1 SHEETS

FED. ROAD DIST. NO.	STATE	FED. AID PROJ. NO.	FISCAL YEAR	SHEET NO.	TOTAL SHEETS
HAWAII	HAW.	IR-H-1(89)	1986	70	99

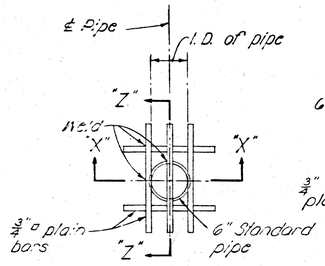

PLAN

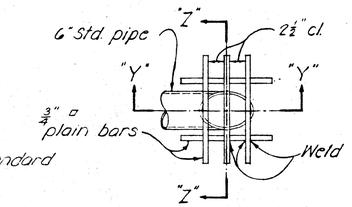

PLAN

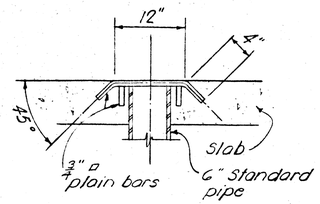

SECTION "Z-Z"

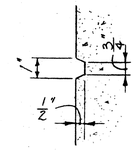

TYPICAL CONCRETE GROOVE DETAIL

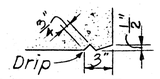

DRIP DETAIL

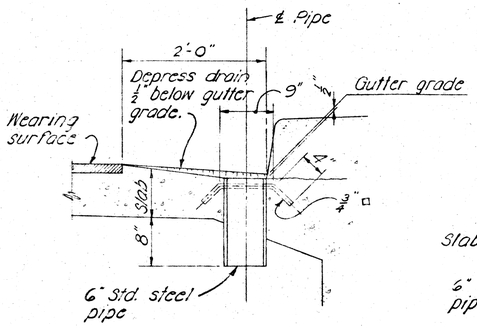

SECTION "X-X"

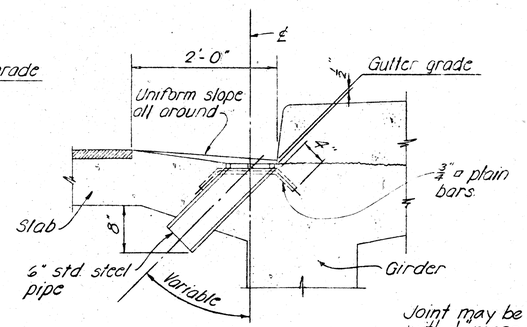

SECTION "Y-Y"

NOTE:

Metal drains shall be considered incidental to Class A Concrete in both concrete and steel bridges and will not be paid for separately.
Assemblage of grillage and pipe shall be hot-dip galvanized after all welding is completed.

TYPICAL DRAINAGE DETAILS

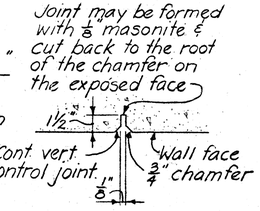

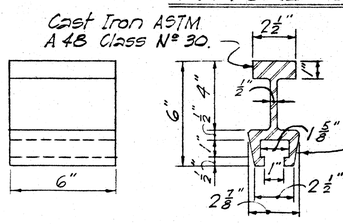

INSERT DETAIL

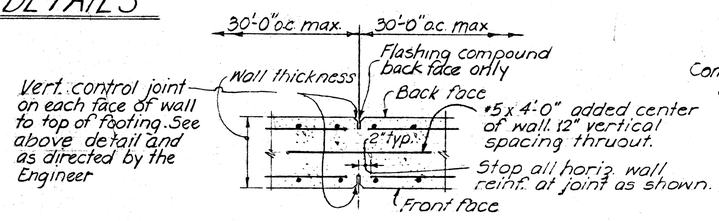

CONTROL JOINT DETAILS

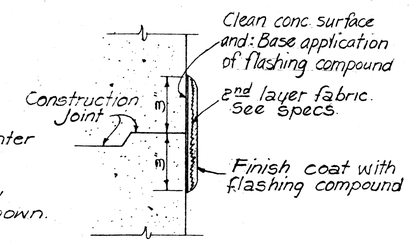

TYP. FLASHING COMPOUND WATERPROOFING DETAIL

GENERAL NOTES

1 - All concrete shall be Class A unless otherwise noted.
2 - Reinforcing shall be detailed in accordance with A.C.I. Manual of Standard Practice for Detailing Reinforced Concrete Highway Structures unless otherwise noted.
3 - Clearance for reinforcing bars shall be as follows, unless otherwise noted:
  a - 1½" for stirrups of beams & pier caps.
  b - 2" for ties of columns.
  c - 2" for formed walls.
  d - 3" for footings.
4 - Minimum spacing between parallel bars shall be 2½ times the diameter of bars, but in no case shall the clear distance between the bars be less than 1½ times the maximum size of the coarse aggregate.
5 - All dimensions relating to reinforcing are to centers of bars unless otherwise noted.
6 - Reinforcing bars shall be securely tied at all intersections & lap splices & shall be held in place during pouring to maintain their proper locations as shown on plans.
7 - Vertical column bars shall be arranged in such a manner as to miss pier cap bars above as directed by the Engineer.
8 - Except as otherwise noted on drawings, all exterior corners & re-entrant angles in concrete work shall be chamfered 3/4" x 3/4".
9 - Concrete seats receiving steel plates, lead plates or neoprene pads shall be poured monolithically with supporting structures & top of concrete seats shall be finished with a steel trowel to a smooth level surface at the elevation shown on the plans.
10 - Elastomeric Pads: Bottom of bridge bearing pads shall be secured against displacement with adhesives approved by the Engineer. Pads shall be incidental to concrete and will not be paid for separately.
11 - Forms for all exposed surfaces of separation structures and surfaces of retaining walls visible from a traveled way or from a populated area shall be plywood except that metal forms may permitted provided a surface finish satisfactory to the Engineer can be obtained and the use of such forms is approved in writing by the Engineer. Forms for round columns shall be made of materials that will give a smooth finish and true dimensions as given in the plans. Forms for prestressed concrete members shall be either metal or plywood.
12 - Gothic letters and figures approximating dimensions shown will be acceptable if approved by the Engineer.
13 - The contractor shall verify the location of all existing utility lines and notify the respective owners before commencing work of excavation or driving of piles.
14 - Standard Detail Drawings refer to all structures in general, except for modifications as may be required for special conditions. For such modifications refer to the corresponding detailed drawings

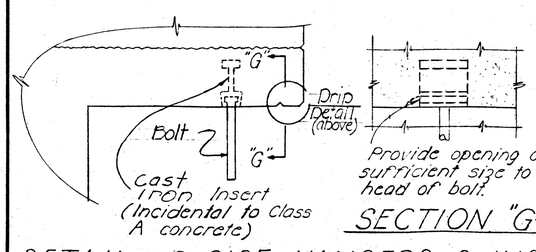

SECTION "G-G"

DETAIL of PIPE HANGERS & INSERTS

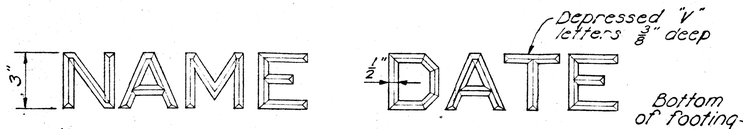

NOTE: Refer to corresponding detail drawings for placement of such names & dates at end post.
Exact details & spacing of letters & figures shall be as directed by the Engineer. See Note #12

TYPICAL DETAIL OF LETTERS & FIGURES AT CONCRETE END POST

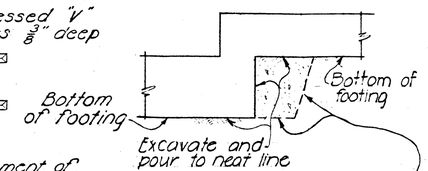

Note! In case of over excavation, the contractor shall backfill this area with minimum class D concrete at his own expense.

TYPICAL EXCAVATION FOR CONTINUOUS FOOTING STEP-UP

APPROVAL RECOMMENDED:
Paul T. Yamashita — 1-23-70
BRIDGE DESIGN ENGINEER — DATE

APPROVED
For Paul T. Yamashita — 1-28-70
ASSISTANT CHIEF, ENGINEERING — DATE

NO.	REVISION	APPROVED BY	DATE

STATE OF HAWAII
DEPARTMENT OF TRANSPORTATION
HIGHWAYS DIVISION

STANDARD DETAILS
NOTES AND MISCELLANEOUS DETAILS

Date: October 1999

SHEET No. OF SHEETS DB-100

70

ORIGINAL PLAN — SURVEY PLOTTED BY / DRAWN BY / TRACED BY / DESIGNED BY / NOTE BOOK No. / QUANTITIES BY / CHECKED BY / DATE

FED. ROAD DIST. NO.	STATE	FED. AID PROJ. NO.	FISCAL YEAR	SHEET NO.	TOTAL SHEETS
HAWAII	HAW.	I-HI-1(108)	1975	ADD. 70A	00

NOTES

1. Exist'g. bridge structure shown by dash lines. Limits of removal of exist'g. structure shown by hatched line areas.
2. For Honouliuli Stream bridge outbound struct., North rail Honolulu end only. Begin new railing P.C. 2'-0" in from end of exist'g. end post bracket as shown in Plan to clear exist'g. conc. sump. All others, begin P.C. at end of exist'g. end post bracket.
3. For curve end section of new concrete railing and connection details of metal guard rail (slot & intermediate support block), see "Standard Details" on sht. # 11B for additional information and details. Also, see note on sht. # 6B.
4. For removal of all exist'g. exposed reinf. (except those shown in "Typ. Sect. (B/7B)" and noted on note (5)) burn 1" below exist'g. conc. deck line as shown in detail. Fill resulting 1" depression with mortar and smooth finish to match exist'g. deck grade.
5. Clean all exposed vertical reinf. occuring in this section (see "Elev." & "Schedule" for location & limits) before pouring of new railing. Remove horizontal bars and curb reinf. (not shown in detail.)
6. The Contractor shall erect portable concrete guard rail when reconstructing the bridge exterior railing. See Sheets 13 & 14 for details of temporary guard rail.

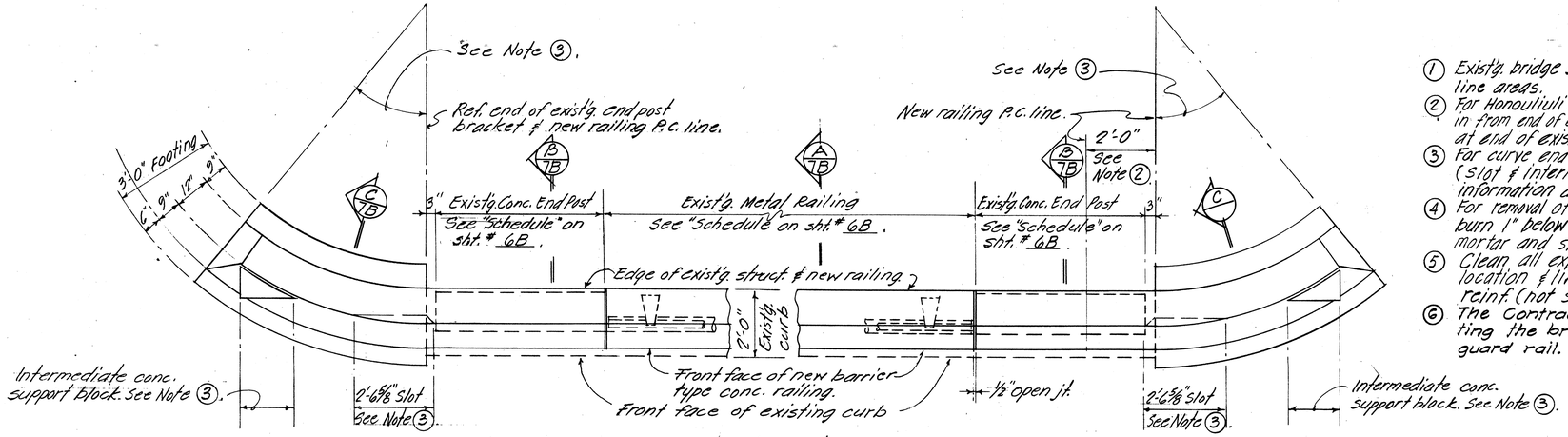

TYP. PART PLAN OF EXISTING & NEW CONC. RAILING FOR PALEHUA, HONOULIULI & KUNIA SEPARATION

Scale: 1/2" = 1'-0"

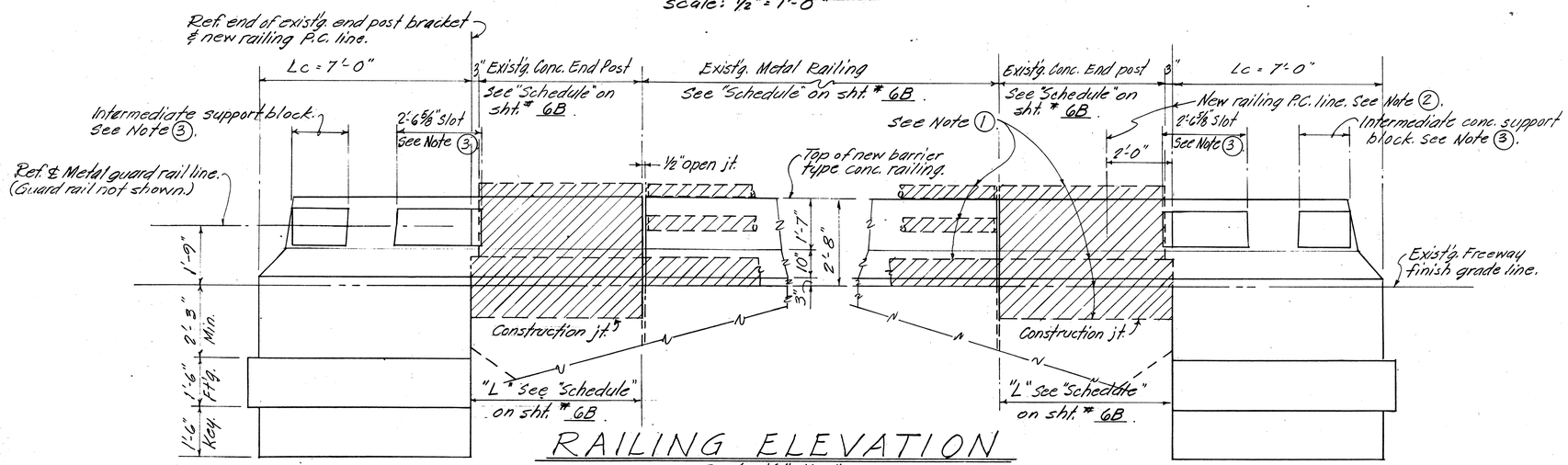

RAILING ELEVATION

Scale: 1/2" = 1'-0"

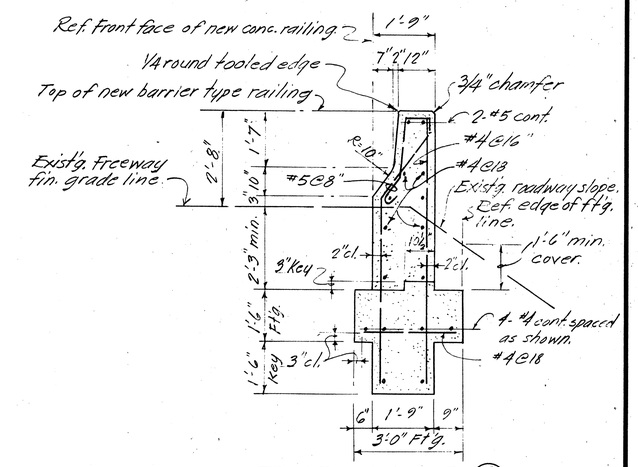

TYP. SECT. (C/7B)

Scale: 3/4" = 1'-0"

ESTIMATED QUANTITIES

ITEM \ LOCATION	PALEHUA SEPARATION	HONOULIULI STR. BRIDGE	KUNIA SEPARATION
* REMOVAL OF EXIST'G. CONCRETE CURB	176 LIN.FT.	582 LIN.FT.	804 LIN.FT.
DRILLING OF HOLES FOR DOWELS	404 HOLES	1,312 HOLES	1,812 HOLES
NEW CONC. BARRIER TYPE RAILING	231.5 LIN.FT.	638 LIN.FT.	860 LIN.FT.

* END POST INCLUDED

Note: This tracing prepared during "As-Built" posting.

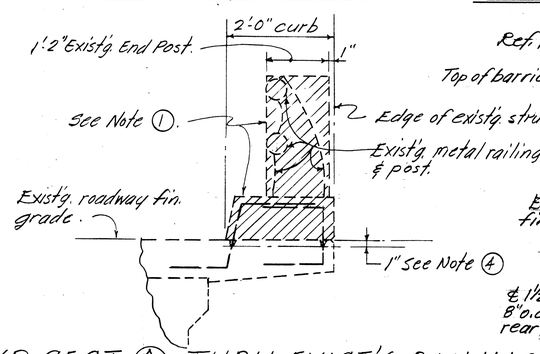

TYP. SECT. (A/7B) THRU EXIST'G. RAILING

Scale: 3/4" = 1'-0"

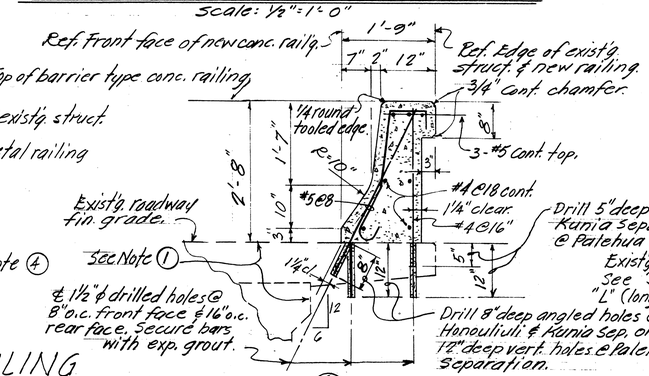

TYP. SECT. (A/7B) THRU NEW CONC. BARRIER TYPE RAILING

Scale: 3/4" = 1'-0"

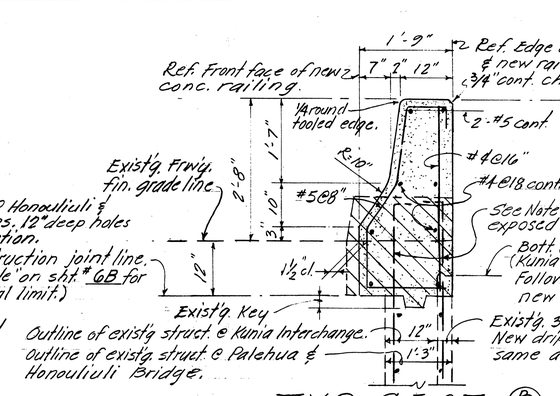

TYP. SECT. (B/7B)

Scale: 3/4" = 1'-0"

STATE OF HAWAII
DEPARTMENT OF TRANSPORTATION
HIGHWAYS DIVISION

REMOVAL & RECONSTRUCTION OF RAIL'G. FOR PALEHUA, HONOULIULI & KUNIA SEPARATION

SAFETY IMPROVEMENTS ALONG INTERSTATE H-1 PALAILAI TO KUNIA

Proj. No. I-HI-1(108) Date: Dec. '73

SHEET No. 7B OF 11B SHEETS

ORIGINAL PLAN — SURVEY PLOTTED BY — DRAWN BY — TRACED BY — DESIGNED BY — QUANTITIES BY — CHECKED BY — DATE — NOTE BOOK — No.

ADD. 70 A

FED. ROAD DIST. NO.	STATE	FED. AID PROJ. NO.	FISCAL YEAR	SHEET NO.	TOTAL SHEETS
HAWAII	HAW.	(2)HI-(18)	1966	71	90

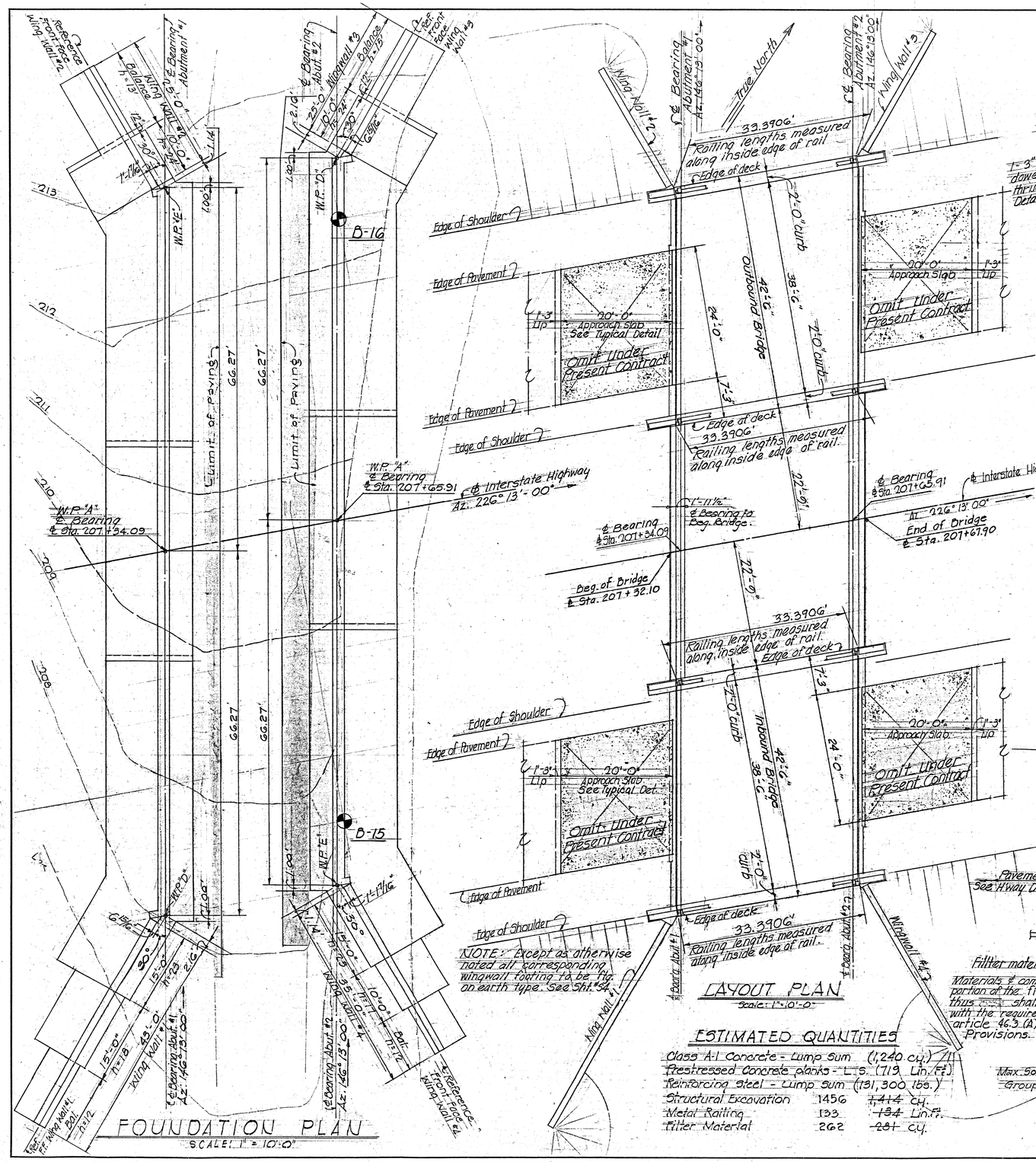

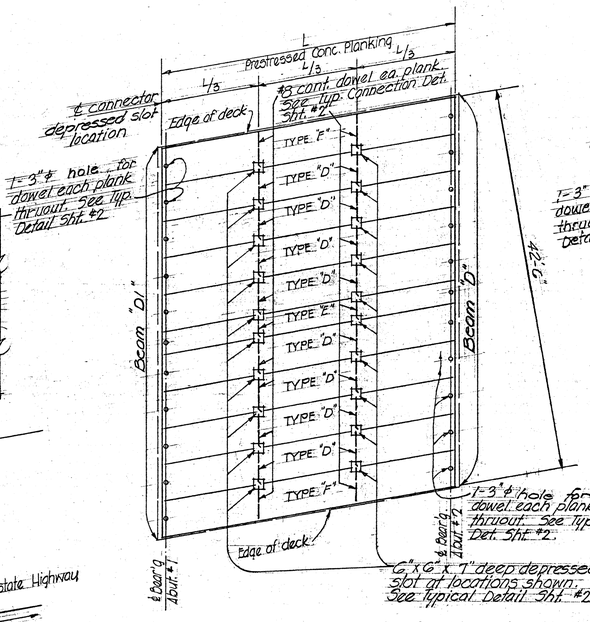

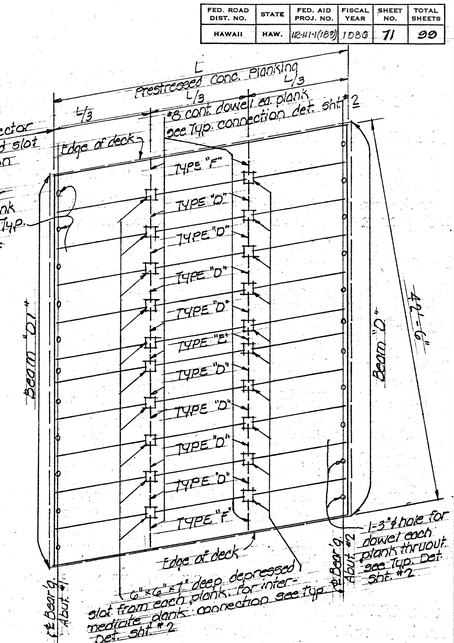

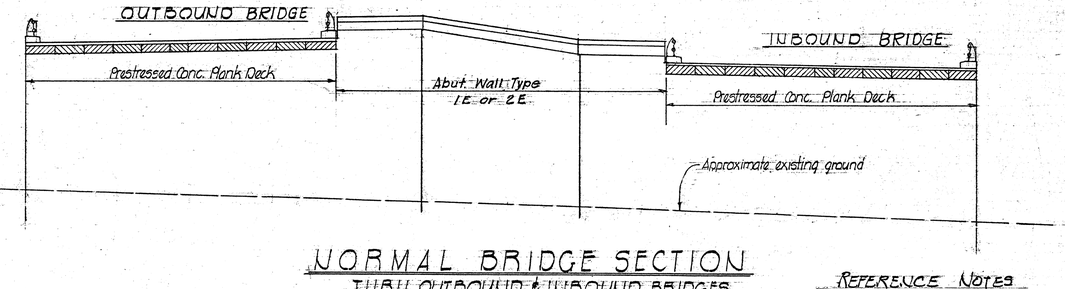

NORMAL BRIDGE SECTION
THRU OUTBOUND & INBOUND BRIDGES

REFERENCE NOTES
1. Top of concrete deck to follow Roadway finish grade.

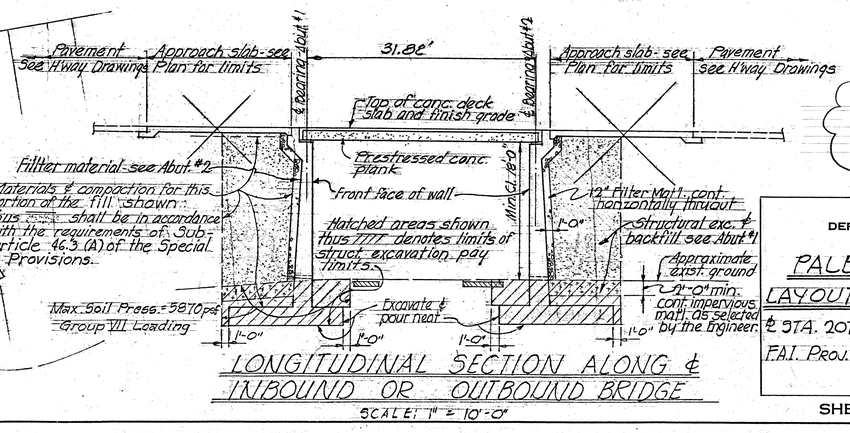

PALEHUA SEPARATION
For information only
(Reduction not to scale)

ESTIMATED QUANTITIES

Class A-1 Concrete - Lump Sum	(1,240 cu.)	
Prestressed Concrete planks - L.S.	(719 Lin. Ft.)	
Reinforcing Steel - Lump Sum	(131,300 lbs.)	
Structural Excavation	1456	~~1,414~~ cu.
Metal Railing	133	~~134~~ Lin. Ft.
Filter Material	262	~~281~~ cu.

STATE OF HAWAII
DEPARTMENT OF TRANSPORTATION
HIGHWAYS DIVISION

PALEHUA SEPARATION
LAYOUT PLANS AND DETAILS

℄ STA. 207+32.10 TO ℄ STA. 207+67.90
F.A.I. PROJ. IHI-(18) PALEHUA RD. to KUNIA RD.
NOV. 1964

SHEET No. 01 OF 07 SHEETS

ORIGINAL PLAN		DATE
SURVEY PLOTTED BY		
DRAWN BY	W.B., J.E.	Nov. '62
TRACED BY	" "	"
DESIGNED BY	L.A., H.T.	"
QUANTITIES BY	J.S., T.G., T.H., W.B.	"
CHECKED BY	J.C., L.A.	"
NOTE BOOK		
No.		

FED. ROAD DIST. NO.	STATE	FED. AID PROJ. NO.	FISCAL YEAR	SHEET NO.	TOTAL SHEETS
HAWAII	HAW.	(12)HH(168)	1986	72	99

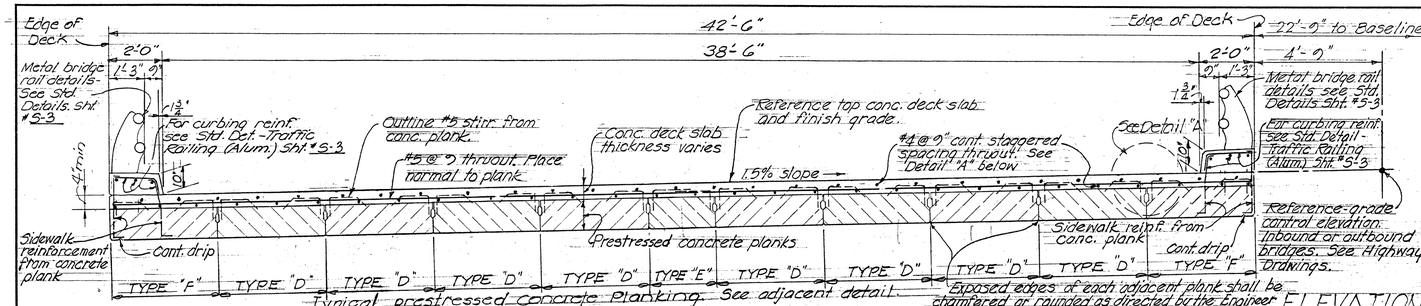

Typical prestressed concrete planking. See adjacent detail.

NORMAL SECTION OUTBOUND BRIDGE AS SHOWN
(INBOUND BRIDGE SIMILAR EXCEPT OPPOSITE HAND)
Scale: 3/8" = 1'-0"

NOTE: All reinf. steel in concrete planks shall be incidental to prestressed conc. planks and will not be paid for separately.

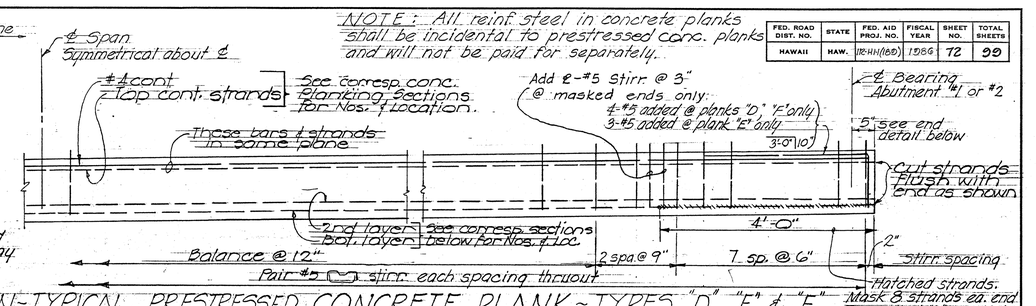

ELEVATION - TYPICAL PRESTRESSED CONCRETE PLANK - TYPES "D", "E" & "F"
Scale: 3/4" = 1'-0"

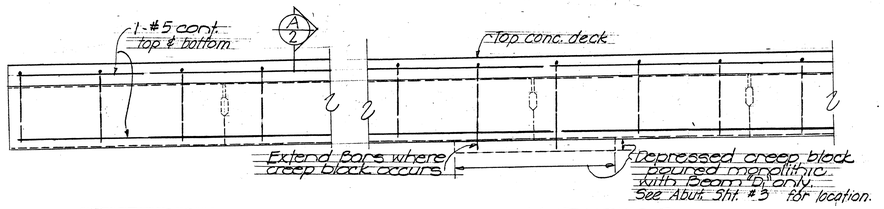

AT ENDS

INTERIOR

ELEVATION BEAM "D" AS SHOWN
(BEAM "D1" SIMILAR EXCEPT AS OTHERWISE NOTED)
Scale: 3/4" = 1'-0"

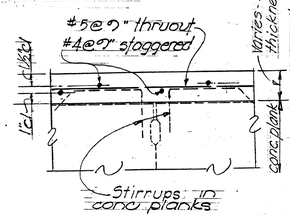

DETAIL "A"
TYPICAL PLACEMENT TRANSVERSE DECK SLAB REINFORCEMENT
3/4" = 1'-0"

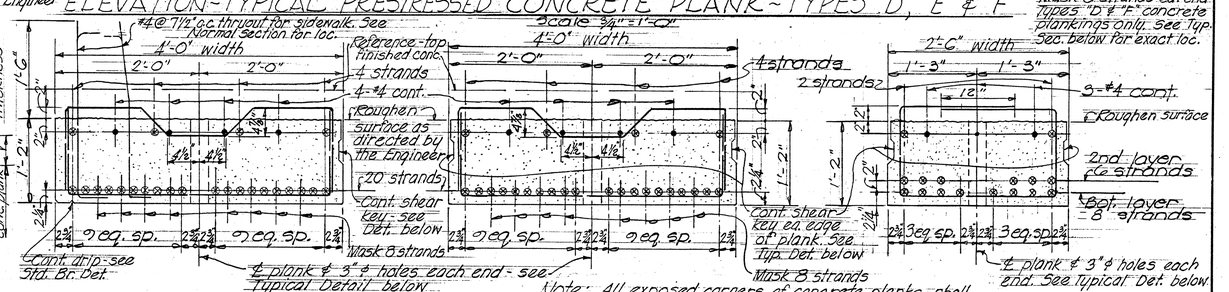

Note: All exposed corners of concrete planks shall have chamfer or rounded edges as directed by the Engineer.

TYPE "F" TYPE "D" TYPE "E"

TYPICAL PRESTRESSED CONCRETE PLANK SECTIONS
Scale: 1" = 1'-0"

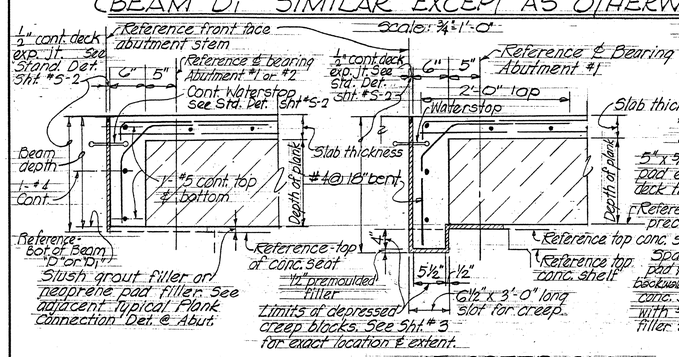

AT CREEP BLOCK
(BEAM "D1" ONLY)

TYPICAL
TYPICAL SECTION A/2
Scale: 1" = 1'-0"

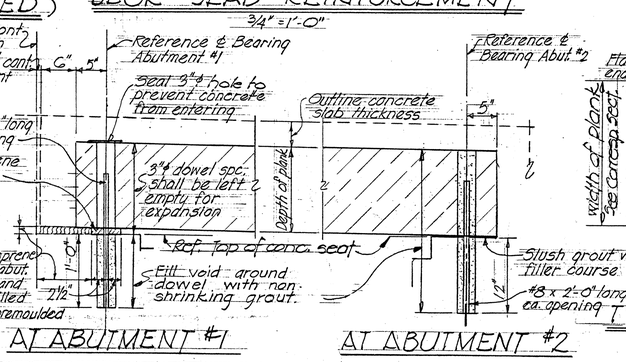

AT ABUTMENT #1 AT ABUTMENT #2

TYPICAL DETAIL - PRESTRESSED PLANK CONNECTION TO ABUTMENTS
Scale: 1" = 1'-0"

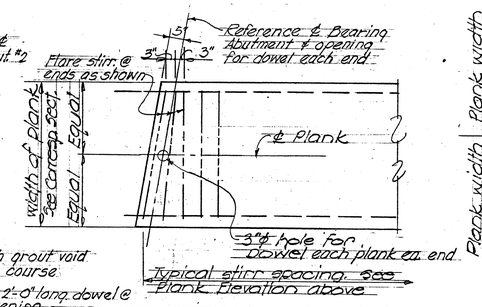

TYPICAL PRESTRESSED CONCRETE PLANK END DETAIL
Scale: 1½" = 1'-0"

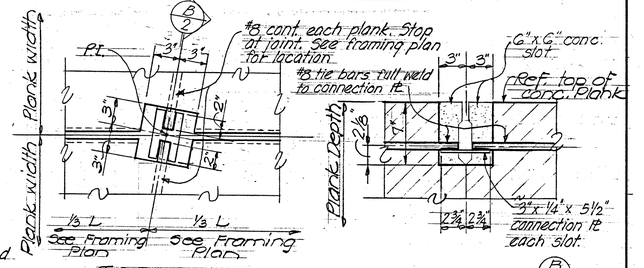

TOP PLAN SECTION B/2

TYPICAL INTERMEDIATE PLANK CONNECTION DETAIL
Scale: 1½" = 1'-0"

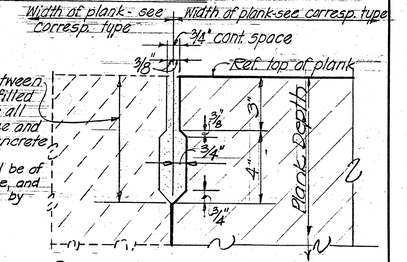

SHEAR KEY DETAIL
Scale: 3" = 1'-0"

NOTE: All prestressing reinforcement shall be ½" diameter, high-tensile stress-relieved strand, conforming to ASTM Designation: A-416.

PALEHUA SEPARATION
For information only
(Reduction not to scale)

STATE OF HAWAII
DEPARTMENT OF TRANSPORTATION
HIGHWAYS DIVISION

PALEHUA SEPARATION
SECTIONS & PRESTRESSED CONC. DET.
℄ STA. 207+32.10 TO ℄ STA. 207+67.90
F.A.I. PROJ. HHI-1(18) PALEHUA RD. TO KUNIA RD.
NOV. 1964

SHEET No. 02 OF 07 SHEETS

72

ORIGINAL PLAN		
	SURVEY PLOTTED BY	
	DRAWN BY C.M.	DATE Nov. '64
	TRACED BY "	"
	DESIGNED BY L.A. H.T.	"
NOTE BOOK	QUANTITIES BY J.E. W.B.	"
No.	CHECKED BY J.O. L.A.	"

FED. ROAD DIST. NO.	STATE	FED. AID PROJ. NO.	FISCAL YEAR	SHEET NO.	TOTAL SHEETS
HAWAII	HAW.	IHI-1(18)	1986	73	93

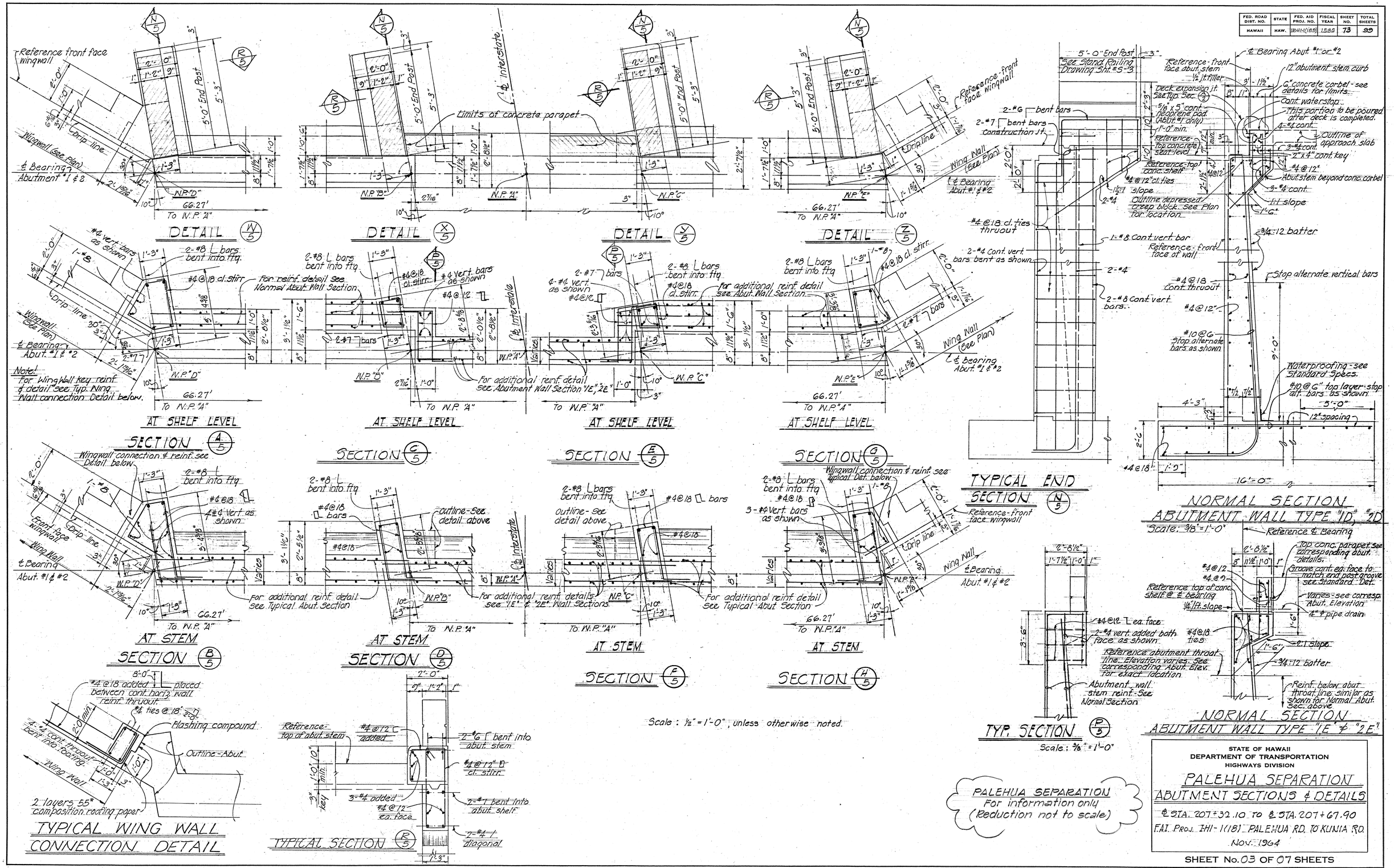

ORIGINAL PLAN	SURVEY PLOTTED BY		DATE
	DRAWN BY	L.K.	Nov. '64
	TRACED BY	"	"
	DESIGNED BY	L.A., H.T.	"
NOTE BOOK	QUANTITIES BY	"	"
No.	CHECKED BY	J.D., L.A.	"

STATE OF HAWAII
DEPARTMENT OF TRANSPORTATION
HIGHWAYS DIVISION

PALEHUA SEPARATION
ABUTMENT SECTIONS & DETAILS

℄ STA. 207+32.10 TO ℄ STA. 207+67.90

F.A.I. PROJ. IHI-1(18) PALEHUA RD. TO KUNIA RD.

NOV. 1964

SHEET No. 03 OF 07 SHEETS

FED. ROAD DIST. NO.	STATE	FED. AID PROJ. NO.	FISCAL YEAR	SHEET NO.	TOTAL SHEETS
HAWAII	HAW.	(18) H-1-1(18)	1968	74	99

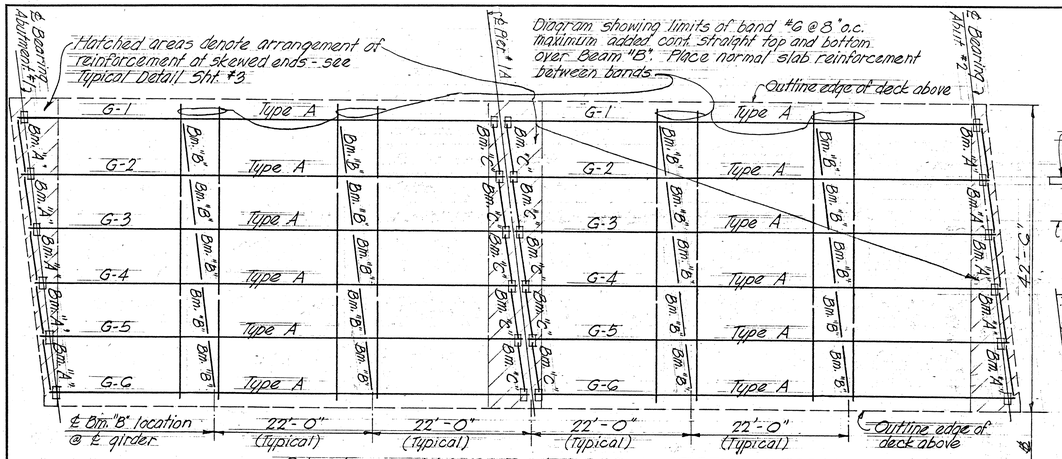

DECK FRAMING PLAN - OUTBOUND

Scale: 1" = 10'-0"

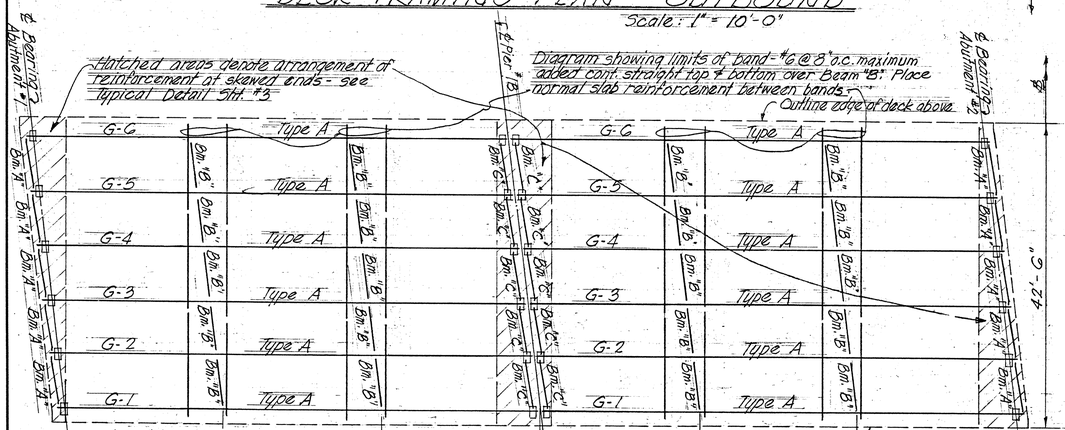

DECK FRAMING PLAN - INBOUND

Scale: 1" = 10'-0"

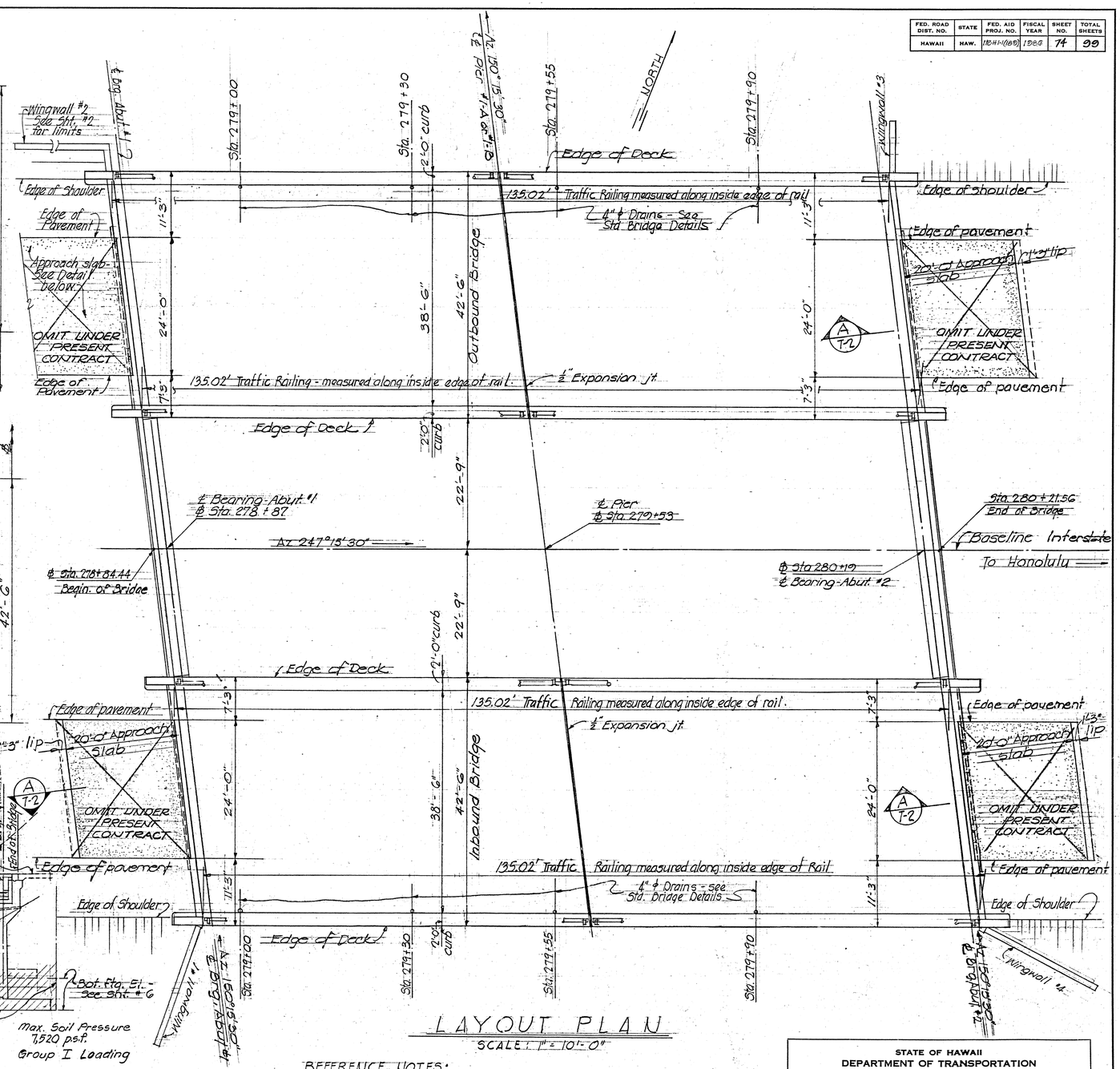

LAYOUT PLAN

SCALE: 1" = 10'-0"

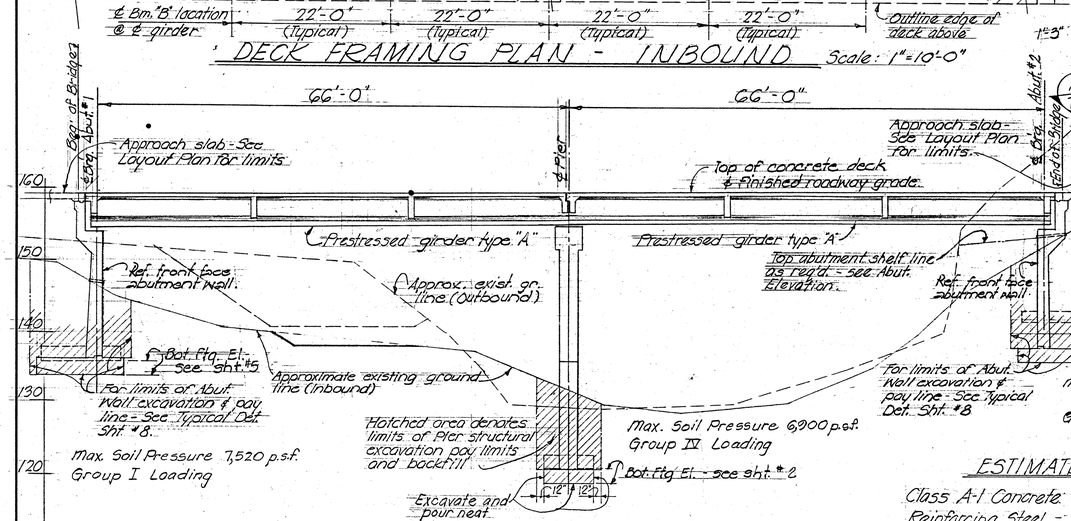

LONGITUDINAL SECTION ALONG ℄ INBOUND OR OUTBOUND BRIDGES

Scale: 1" = 10'-0"

ESTIMATED QUANTITIES

Class A-1 Concrete - Lump Sum		(1,231.	c.y.)
Reinforcing Steel - Lump Sum		(183,500	lbs.)
Structural Excavation	2,474	~~2,240~~	c.y.
Prestressed Girder	Lump Sum	(1,604.	Lin. Ft.)
Filter Material	105	~~98~~	c.y.
Metal Bridge Railing (Traffic Railing)		540.	Lin. Ft.

REFERENCE NOTES:

1. Prestressed girder details - see sht #9
2. For general notes, see sheet #T-1.
3. For additional details not shown in these sheets, refer to Standard Detail Drawings, shts. #S-1, S-2, S-3, & S-4

HONOULIULI STEAM BRIDGE
For information only
(Reduction not to scale)

STATE OF HAWAII
DEPARTMENT OF TRANSPORTATION
HIGHWAYS DIVISION

HONOULIULI STREAM BRIDGE

LAYOUT PLAN & DETAILS

℄ STA. 278+84.44 TO ℄ STA. 280+21.56

F.A.I. Proj. I-HI-1(18) PALEHUA RD. TO KUNIA RD.

NOV. 1964

SHEET No. 04 OF 07 SHEETS

ORIGINAL PLAN			DATE
	SURVEY PLOTTED BY		
	DRAWN BY	C.H., W.Y., T.H.	NOV. '64
	TRACED BY	"	"
	DESIGNED BY	L.A., H.K.	"
NOTE BOOK	QUANTITIES BY	T.H., H.E., Tatsuda	"
	CHECKED BY	T.O., L.A.	"
No.			

FED. ROAD DIST. NO.	STATE	FED. AID PROJ. NO.	FISCAL YEAR	SHEET NO.	TOTAL SHEETS
HAWAII	HAW.	IR-H1-1(103)	1966	75	99

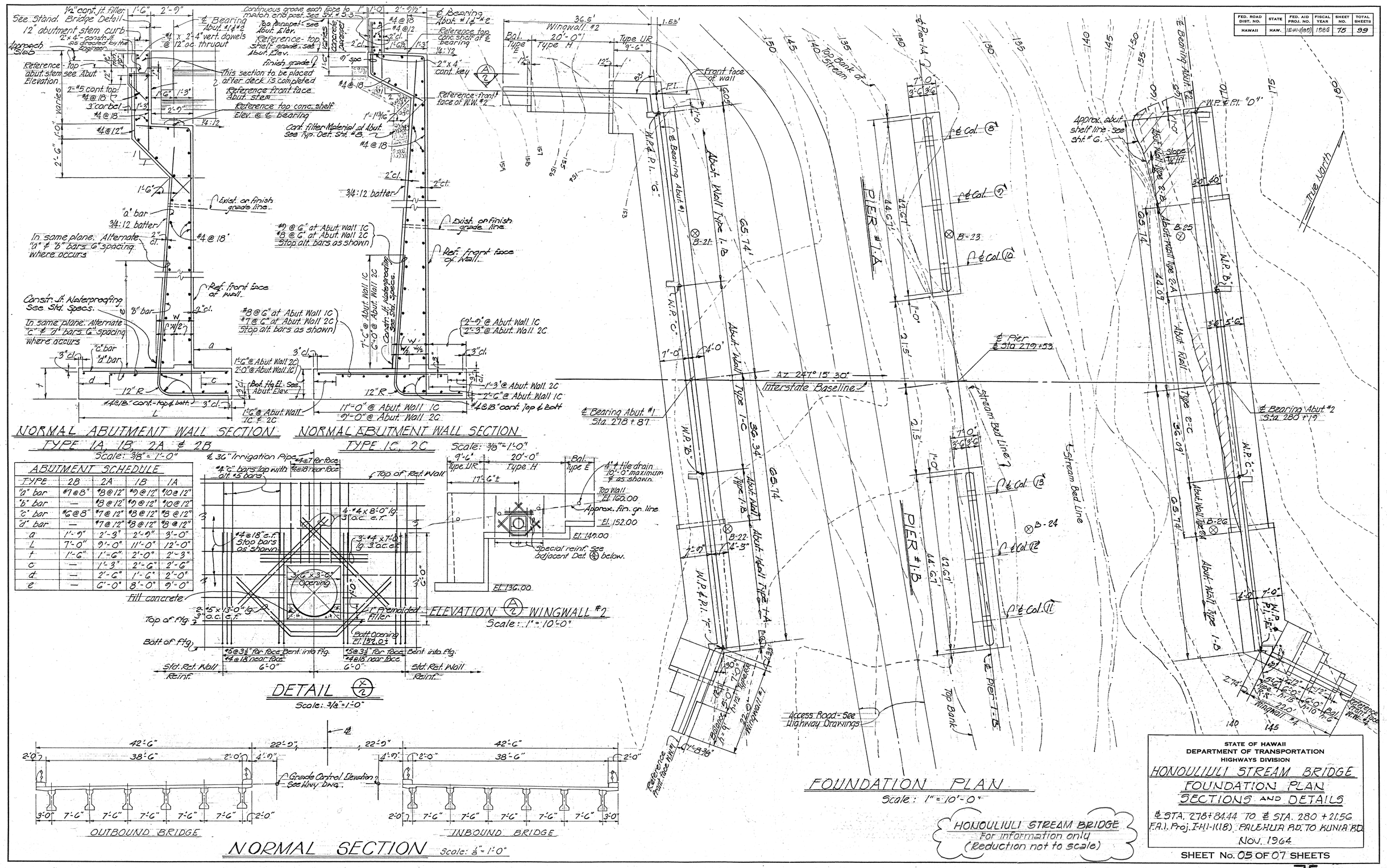

ORIGINAL PLAN	
SURVEY PLOTTED BY	
DRAWN BY	Mr. TM
TRACED BY	" "
DESIGNED BY	LA
QUANTITIES BY	" "
CHECKED BY	JTO
DATE	Nov. 66
NOTE BOOK	
No.	

FED. ROAD DIST. NO.	STATE	FED. AID PROJ. NO.	FISCAL YEAR	SHEET NO.	TOTAL SHEETS
HAWAII	HAW.	(2)H-H-(183)	1986	76	99

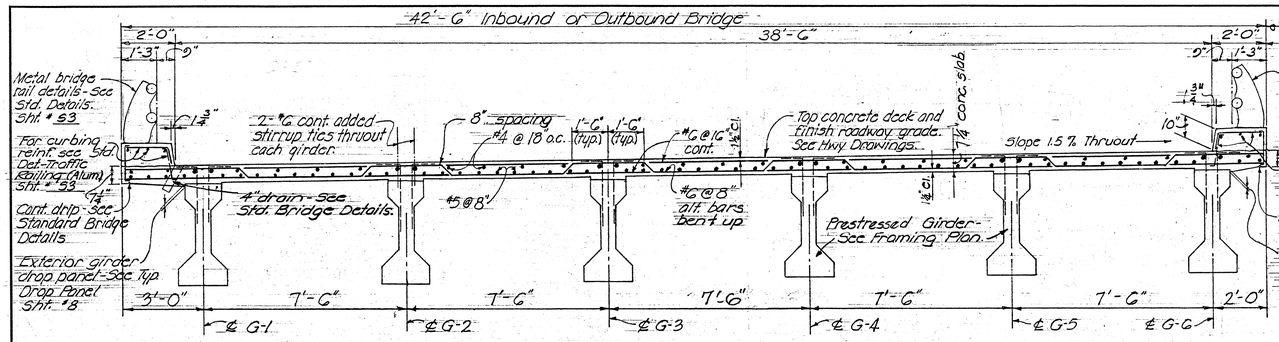

NORMAL SECTION - INBOUND OR OUTBOUND BRIDGE

Scale: 3/8" = 1'-0"

NOTE: Depending on the initial camber of the prestressed girders, the slab camber shown may have to be altered to get the final finish grade at the top of the deck. Actual camber to be determined in the field by the Engineer.

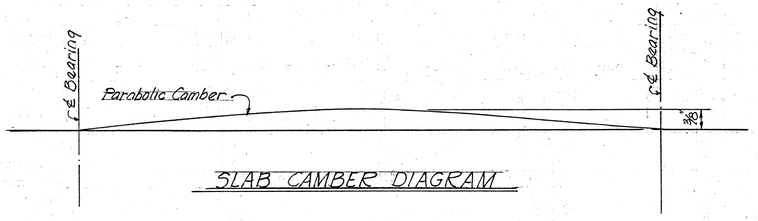

SLAB CAMBER DIAGRAM

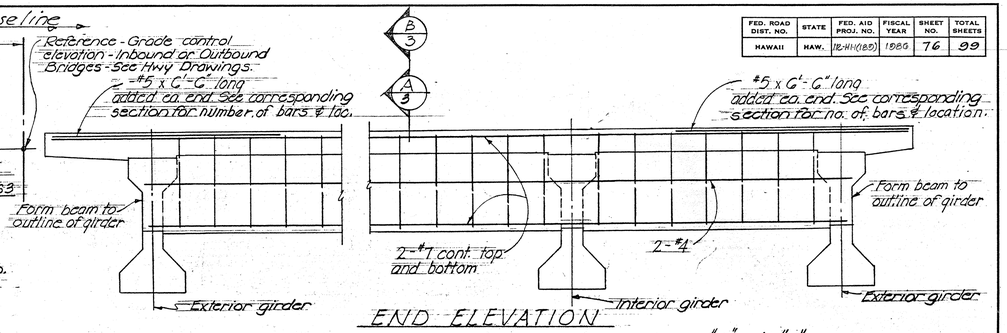

END ELEVATION

TYPICAL TRANSVERSE BEAM "A" & "C"

Scale: 1/2" = 1'-0"

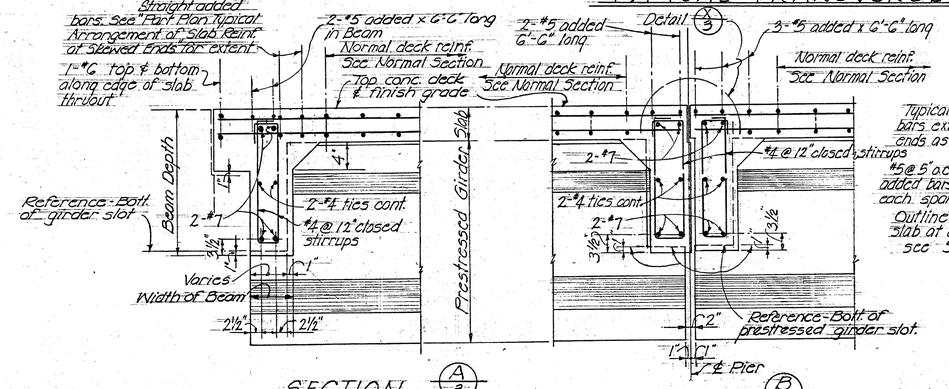

SECTION (A/3) (BEAM "A")

SECTION (B/3) (BEAM "C")

Scale: 3/4" = 1'-0"

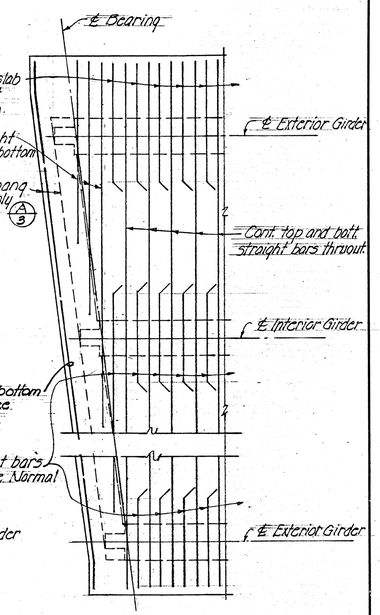

PART PLAN

TYPICAL ARRANGEMENT OF TRANSVERSE SLAB REINFORCEMENT AT SKEWED ENDS

Note: Weld ℄ incidental to prestressed girder & not paid for separately.

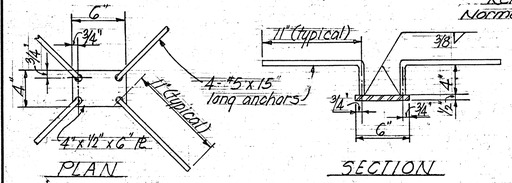

WELD PLATE DETAIL

Scale: 1½" = 1'-0"

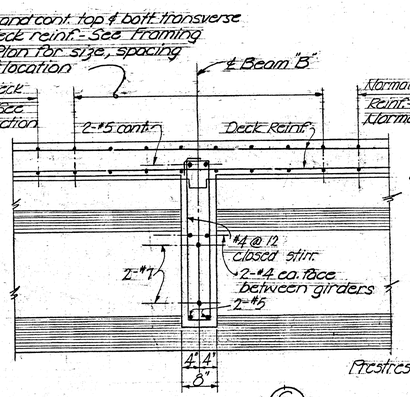

SECTION (C/3)

Scale: 3/4" = 1'-0"

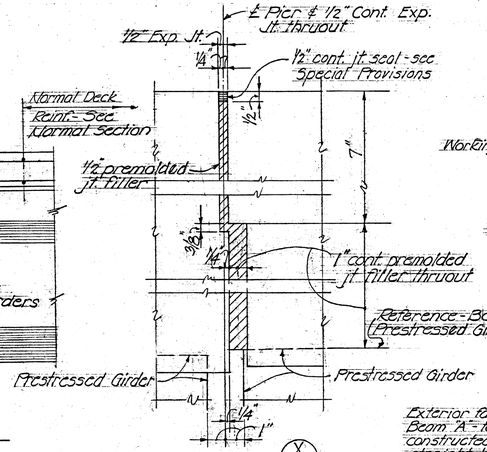

DETAIL (X/3)

Scale: 3" = 1'-0"

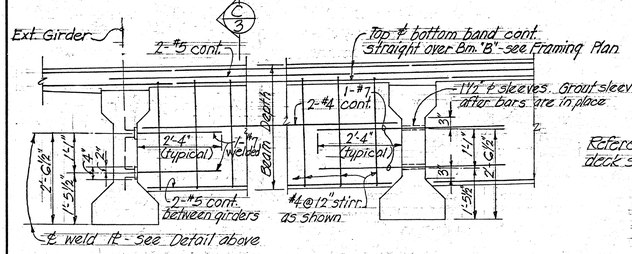

TYPICAL BEAM "B" DETAILS

Scale: 1/2" = 1'-0"

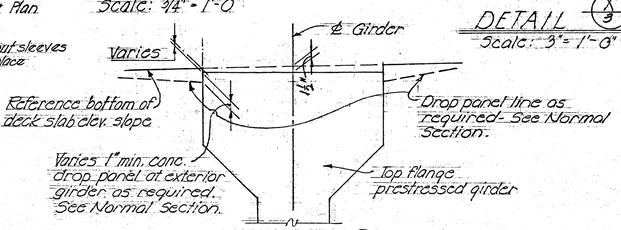

SECTION (D/3)

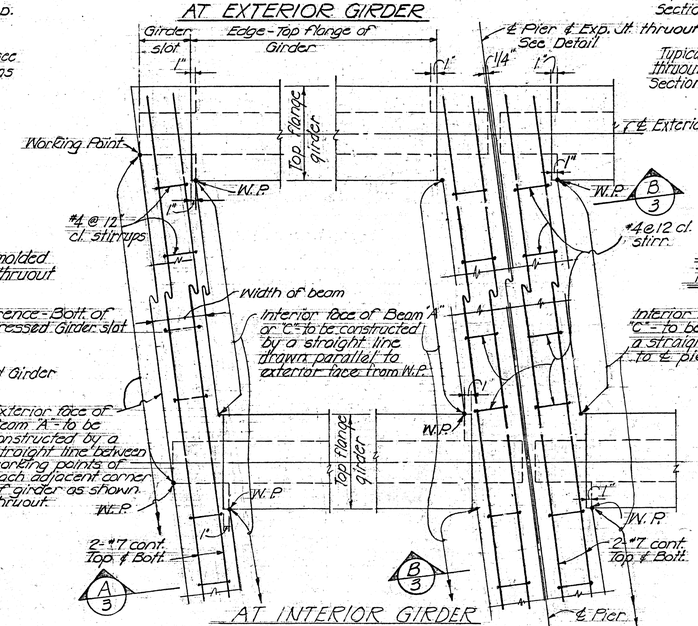

TRANSVERSE BEAM "A" TRANSVERSE BEAM "C"

PLAN - TYPICAL ARRANGEMENT & LOCATION OF TRANSVERSE BEAM REINF. AT GIRDERS

HONOULIULI STREAM BRIDGE
For information only
(Reduction not to scale)

STATE OF HAWAII
DEPARTMENT OF TRANSPORTATION
HIGHWAYS DIVISION

HONOULIULI STREAM BRIDGE

DECK SECTIONS AND DETAILS

℄ STA. 278+84.44 TO ℄ STA. 280+21.56

F.A.I. Proj. I-H1-1(18) PALEHUA RD. TO KUNIA RD.

Nov. 1964

SHEET No. 00 OF 07 SHEETS

ORIGINAL PLAN	SURVEY PLOTTED BY	NV	TM	DATE Nov. 1964
	DRAWN BY	NV	TM	"
	TRACED BY	LA	HK	"
NOTE BOOK	DESIGNED BY	LA	JC	"
	QUANTITIES BY	TT	JC	"
No.	CHECKED BY	JFO	LA	"

76

TED ON CLEARPRINT 1000-H

FED. ROAD DIST. NO.	STATE	FED. AID PROJ. NO.	FISCAL YEAR	SHEET NO.	TOTAL SHEETS
HAWAII	HAW.	(12)H1-1(18)	1966	77	99

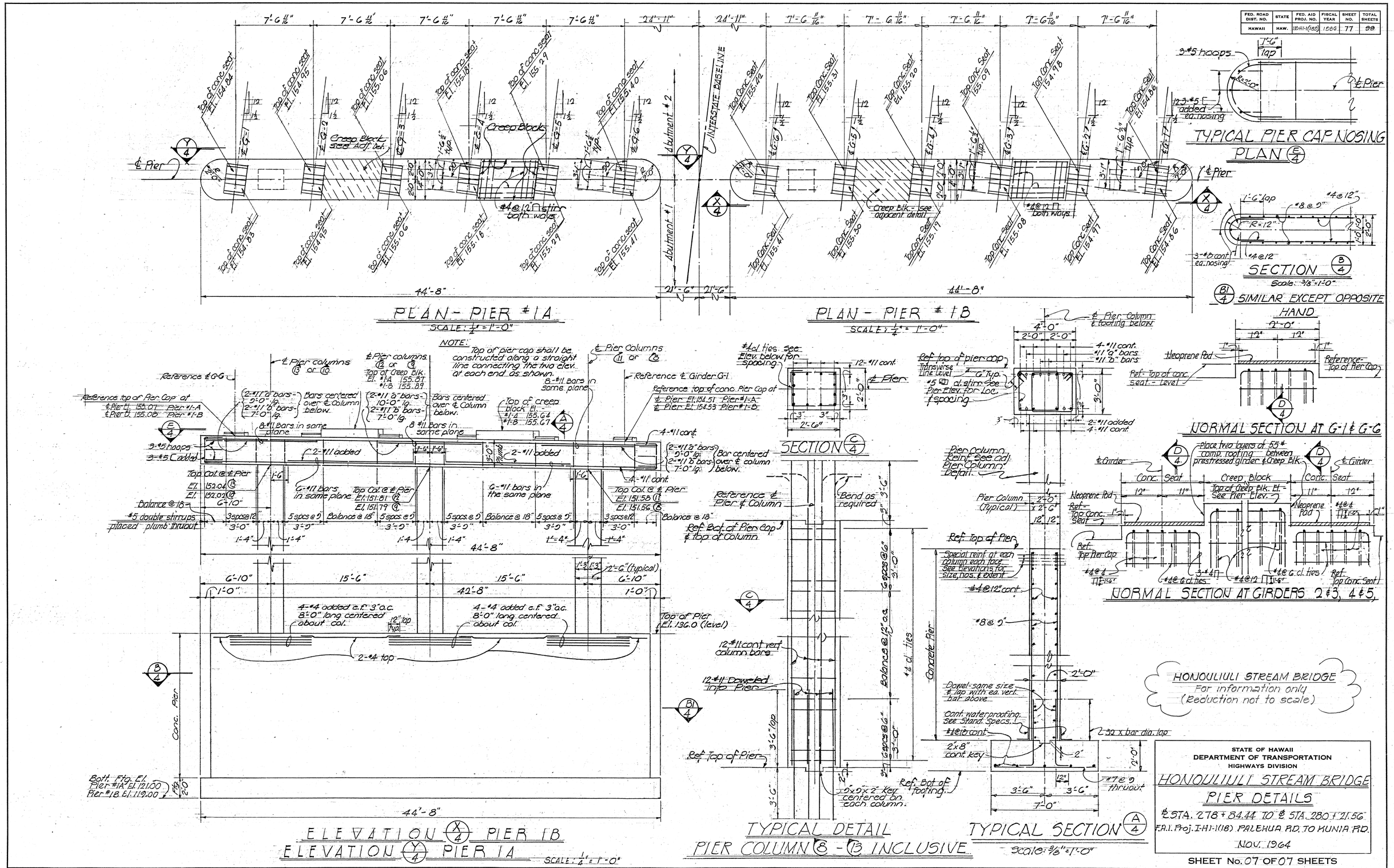

STATE OF HAWAII
DEPARTMENT OF TRANSPORTATION
HIGHWAYS DIVISION

HONOULIULI STREAM BRIDGE

PIER DETAILS

℄ STA. 278 + 84.44 TO ℄ STA. 280 + 21.56

F.A.I. Proj. I-H1-1(18) PALEHUA RD. TO KUNIA RD.

NOV. 1964

SHEET No. 07 OF 07 SHEETS

ORIGINAL PLAN	SURVEY PLOTTED BY	C. M.
	DRAWN BY	" "
	TRACED BY	" "
	DESIGNED BY	H.S.
NOTE BOOK	QUANTITIES BY	W.B.
No.	CHECKED BY	J.T.O.

DATE Nov. 64

77