FED. ROAD DIST. NO.	STATE	FED. AID PROJ. NO.	FISCAL YEAR	SHEET NO.	TOTAL SHEETS
HAWAII	HAW.	I-IR-HI-I(169):17	1983	46	280

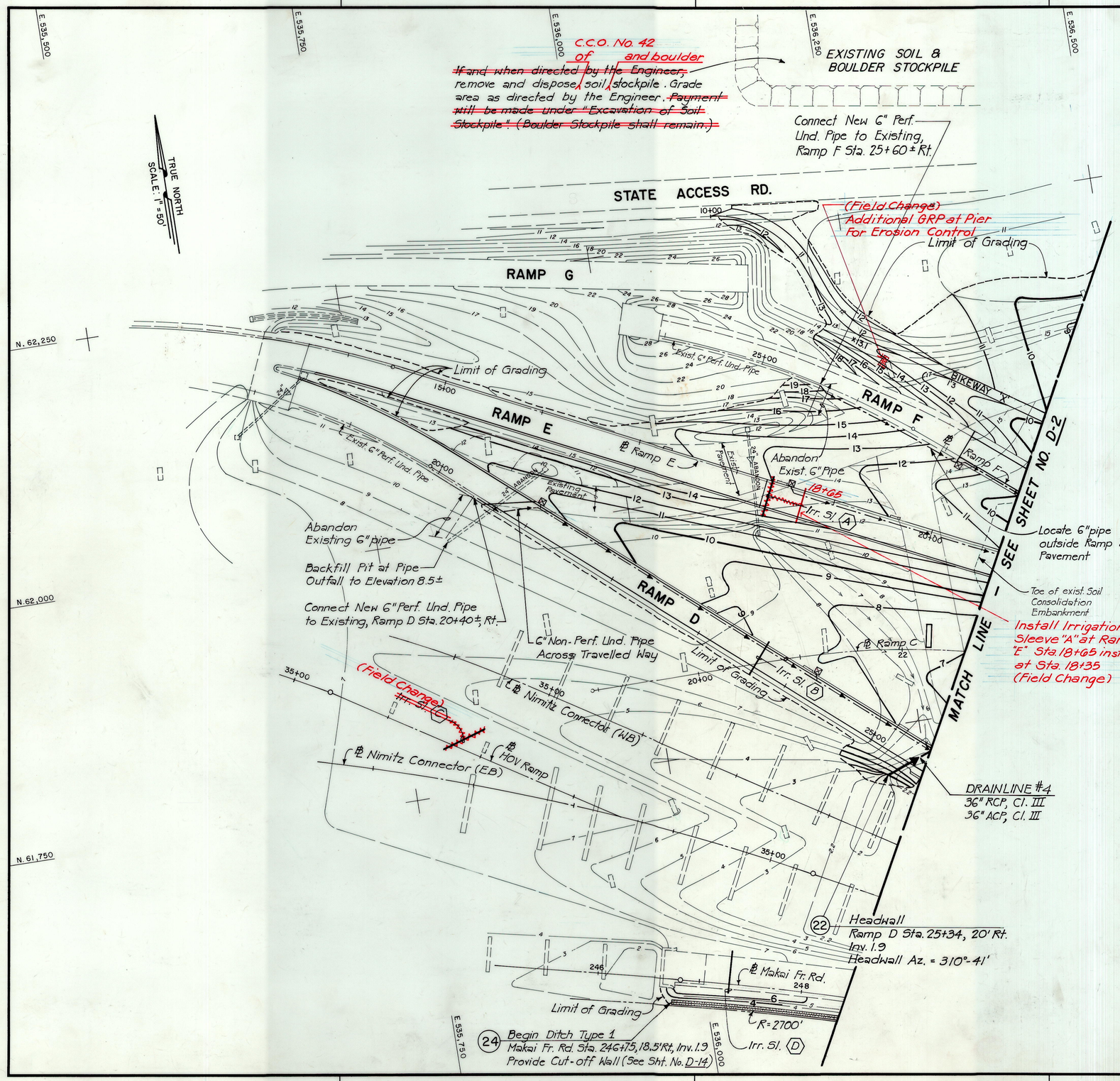

CURB SLOT LOCATIONS

LOCATION		TYPE
~~Makai Fr. Rd. Sta. 248+65, Rt.~~		~~IV~~
~~249+90, Rt.~~		~~IV~~
~~250+55, Rt.~~		~~IV~~
~~250+95, Rt.~~		~~IV~~
~~251+50, Rt.~~		~~III~~
Middle St. (SB) Sta.	11+38, 26' Rt.	I
	12+10, 26' Rt.	II
	12+86, 26' Rt.	II
Nimitz Conn. (WB) Sta.	41+55, Lt.	II
	41+75, Lt.	II
	42+20, Lt.	II
	42+80, Lt.	II
Ramp C Sta.	25+85, Rt.	II
	26+85, Rt.	II
	27+50, Rt.	IV
	28+35, Rt.	II
Ramp D Sta.	23+00, Lt.	II
	24+10, Lt.	II
	25+20, Lt.	II
	26+30, Lt.	II
	26+80, Lt.	II
	27+15, Lt.	II
	27+50, Lt.	II
	27+90, Lt.	II
	28+30, Lt.	II
Ramp E Sta.	17+30, Lt.	II
	18+45, Lt.	II
	19+60, Lt.	II
	20+75, Lt.	II
	21+90, Lt.	II
	22+35, Lt.	I

ABBREVIATIONS

RCP	Reinforced Concrete Pipe
ACP	Asbestos Cement Pipe
Cl.	Class
Inv.	Invert
CB	Catch Basin
DI	Drop Intake
MH	Manhole
TMH	Telephone Manhole
Perf. Und.	Perforated Underdrain
Irr. Sl.	Irrigation Sleeve
N.I.C.	Not in Contract

LEGEND

- Drainline
- Existing Drainline, Pipe Size
- (5) Drainage Structure
- Underdrain Cleanout
- 6" Non-Perf. Und. Pipe
- 6" Perf. Und. Pipe
- Existing 6" Und. Pipe
- Lined Ditch
- Grouted Rubble Paving (GRP) 9" thick, unless otherwise shown
- Right-of-Way Line
- Easement Line
- Limit of Grading
- Curb Slot
- New Pier
- Existing Pier
- 10 Contour for Grading
- 10 Existing Contour
- Side Slope, Existing Soil Consolidation Embankment
- Temporary Vee Ditch with 2:1 Side Slopes (Payment incidental to various Contract Items)
- Existing Swale on Ditch

NOTE:

See Sheet D-3 for General Notes.

DATE	REVISION
2/24/86	Changed location of Bikeway 'X' and revised grading in vicinity of Bikeway 'X'

STATE OF HAWAII
DEPARTMENT OF TRANSPORTATION
LAND TRANSPORTATION FACILITIES DIVISION

DRAINAGE AND GRADING PLAN

INTERSTATE ROUTE H-1
PROJECT NO. I-IR-HI-I(169):17

SCALE: 1" = 50' DATE: 3/15/82

SHEET No. D-1 OF D-25 SHEETS

WERNER BEUGGERT REGISTERED PROFESSIONAL ENGINEER No. 3383-E HAWAII, U.S.A.

THIS WORK WAS PREPARED BY ME OR UNDER MY SUPERVISION.

ORIGINAL PLAN	SURVEY PLOTTED BY	DATE
	DRAWN BY	
	TRACED BY	
NOTE BOOK	DESIGNED BY	
	QUANTITIES BY	
NO.	CHECKED BY	

"AS-BUILT"

C.O. 46

FED. ROAD DIST. NO.	STATE	FED. AID PROJ. NO.	FISCAL YEAR	SHEET NO.	TOTAL SHEETS
HAWAII	HAW.	I-IR-HI-I(169)-17	1983	47	280

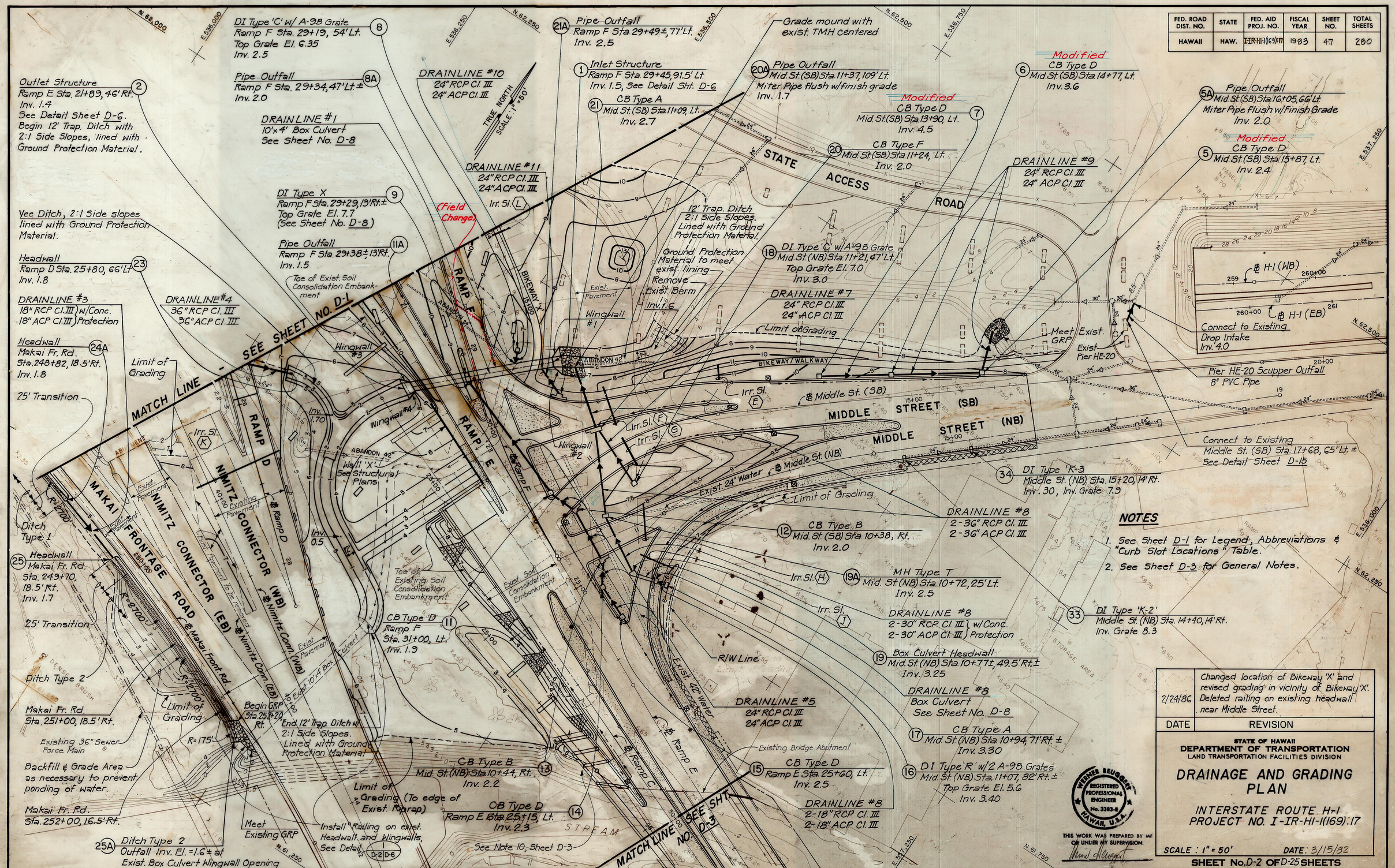

NOTES

1. See Sheet D-1 for Legend, Abbreviations & "Curb Slot Locations" Table.
2. See Sheet D-3 for General Notes.

DATE	REVISION
2/24/86	Changed location of Bikeway 'X' and revised grading in vicinity of Bikeway 'X'. Deleted railing on existing headwall near Middle Street.

STATE OF HAWAII
DEPARTMENT OF TRANSPORTATION
LAND TRANSPORTATION FACILITIES DIVISION

DRAINAGE AND GRADING PLAN

INTERSTATE ROUTE H-1
PROJECT NO. I-IR-HI-I(169):17

SCALE: 1" = 50' DATE: 3/15/82

SHEET No. D-2 OF D-25 SHEETS

WERNER BEUGERT
REGISTERED PROFESSIONAL ENGINEER
No. 3383-E
HAWAII, U.S.A.

THIS WORK WAS PREPARED BY ME OR UNDER MY SUPERVISION.

ORIGINAL PLAN	SURVEY PLOTTED BY	DATE
	PLANS PREP. BY	
	TRACED BY	
NOTE BOOK	DESIGNED BY	
No.	CHECKED BY	
	CHECKED BY	

"AS-BUILT"

C.O. 47

FED. ROAD DIST. NO.	STATE	FED. AID PROJ. NO.	FISCAL YEAR	SHEET NO.	TOTAL SHEETS
HAWAII	HAW.	I-IR-HI-(163):17	1983	48	280

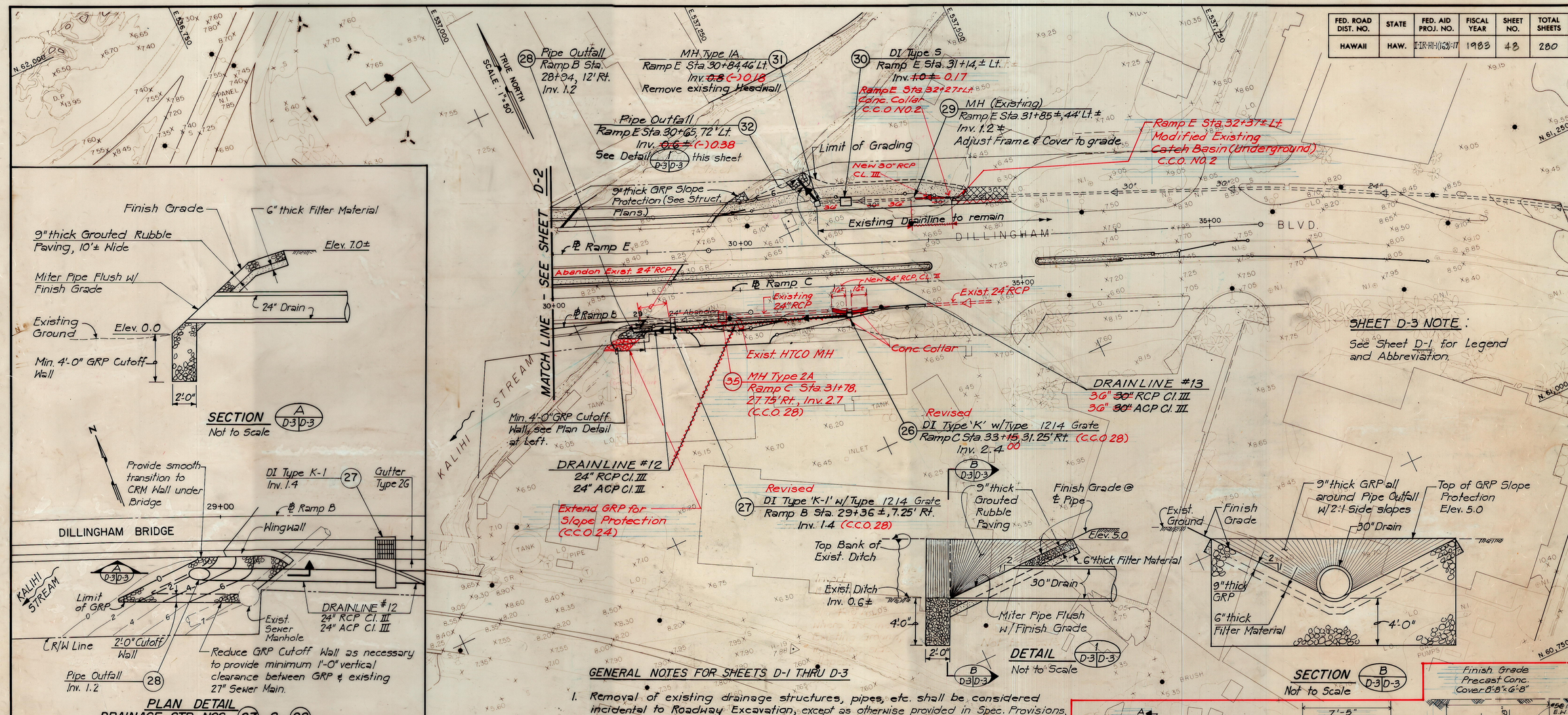

GENERAL NOTES FOR SHEETS D-1 THRU D-3

1. Removal of existing drainage structures, pipes, etc. shall be considered incidental to Roadway Excavation, except as otherwise provided in Spec. Provisions, Subsection 202.06.
2. Revisions to drainline profiles shall be approved by the Engineer.
3. Contractor shall provide & maintain, as is necessary, temporary water diversion facilities with equal or larger capacity than the existing drainage facilities. Payment shall be considered incidental to various contract items, unless indicated otherwise.
4. Construction of drainage facilities, or portions thereof, which are in conflict with detour traffic patterns shall be delayed until they can be constructed without obstructing traffic.
5. Grates and Manhole covers of drain structures to be demolished shall become the property of the Contractor.
6. Ground Protection Material (6" thick crushed rock) shall be placed under all bridge structures with less than 10' vertical clearance. (See Detail Sheet No. D-14)
7. Contractor shall verify locations and elevations of all existing utilities intersecting Drainline #8 prior to construction of any portion of Drainline #8.
8. For Irrigation Sleeve locations and Invert Elevations, see Sheet D-16.
9. Unless otherwise indicated by contours, grading of traffic islands of Middle Street intersection shall be flush with top of curbs and shall follow a straight line from top of curb to top of curb.
10. Remove existing riprap, filter fabric & sand blanket in Kalihi Stream as is necessary to facilitate construction of the Ramp B Structure and gasline. Replace damaged filter fabric & restore riprap lining to its original condition. Payment shall be considered incidental to various contract items.
11. Rock, boulders, silt deposits and other loose or soft sediments in Kalihi Stream under widened and existing Dillingham Bridges shall be excavated down to elevation -1.0, and all debris and vegetation shall be removed. Existing pile remnants within Right-of-Way on north side of existing outbound bridge, which project above stream invert, shall be cut-off at 1.0 foot below grade. Payment for excavation, removal and disposal of subject materials will not be paid separately, but will be considered incidental to various contract items.
12. All culverts installed on project were RCP CL. III.

ORIGINAL PLAN	SURVEY PLOTTED BY
	DRAWN BY
	TRACED BY
NOTE BOOK	DESIGNED BY
	QUANTITIES BY
No.	CHECKED BY
	DATE

Note: This tracings prepared during "As-Built" posting.

WERNER BEUGGERT REGISTERED PROFESSIONAL ENGINEER No. 3383-E HAWAII, U.S.A.

THIS WORK WAS PREPARED BY ME OR UNDER MY SUPERVISION.

STATE OF HAWAII
DEPARTMENT OF TRANSPORTATION
HIGHWAYS DIVISION

DRAINAGE AND GRADING PLAN

INTERSTATE ROUTE H-1
PROJECT NO. I-IR-HI-1(169):17

SCALE: 1" = 50' DATE: 3/15/82

SHEET No. D-3 OF D-25 SHEETS

"AS-BUILT"

FED. ROAD DIST. NO.	STATE	FED. AID PROJ. NO.	FISCAL YEAR	SHEET NO.	TOTAL SHEETS
HAWAII	HAW.	I-IR-HI-I(169):17	1983	49	280

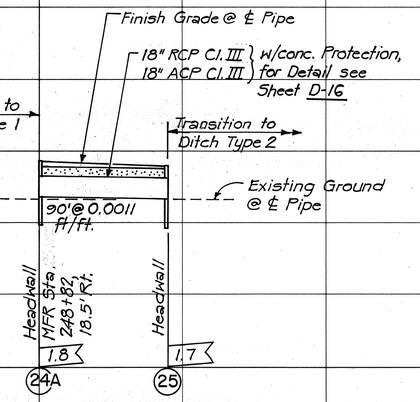

DRAINLINE # 3

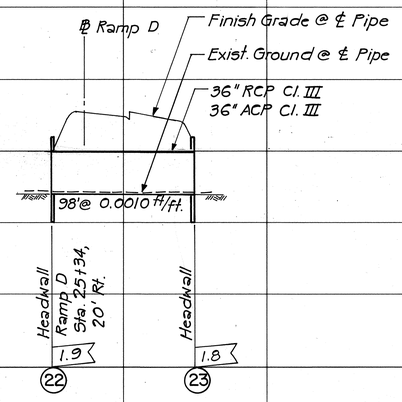

DRAINLINE #4

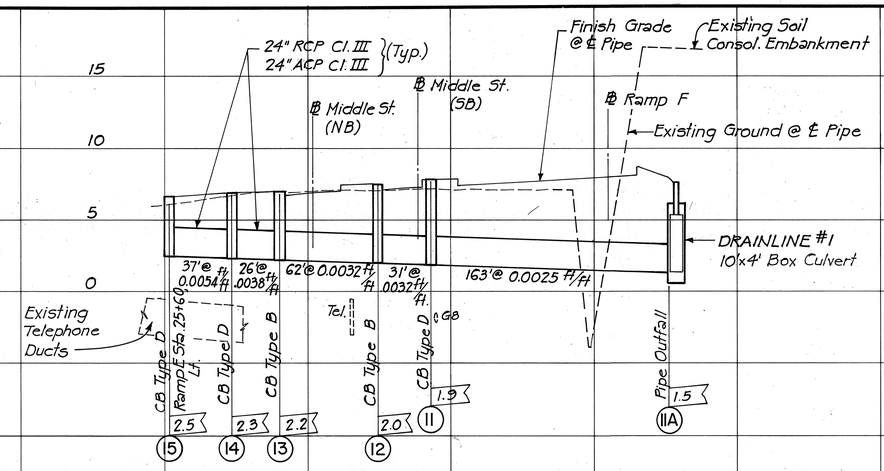

DRAINLINE #5

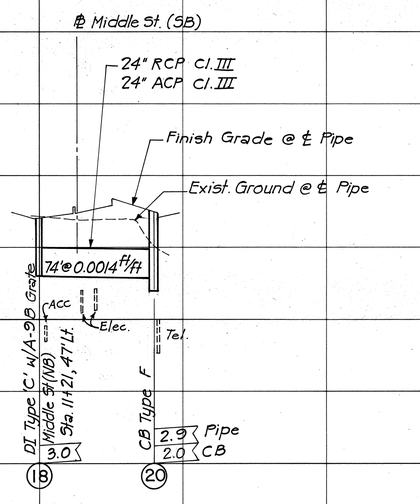

DRAINLINE #7

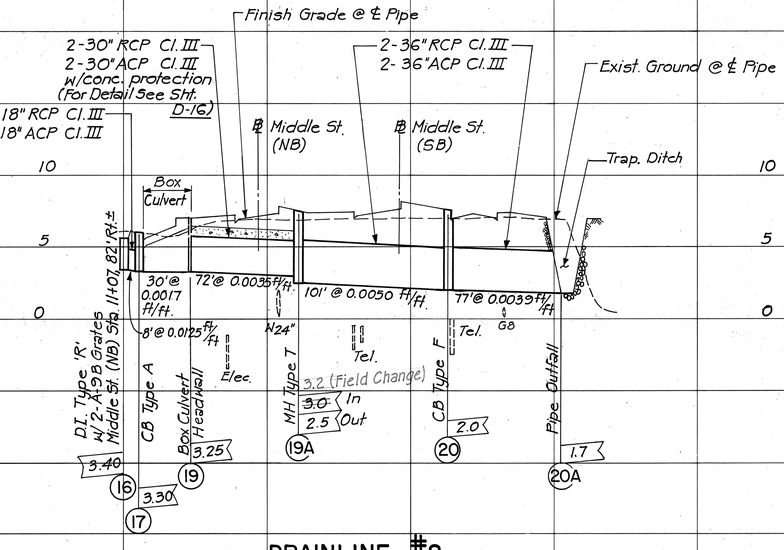

DRAINLINE #8

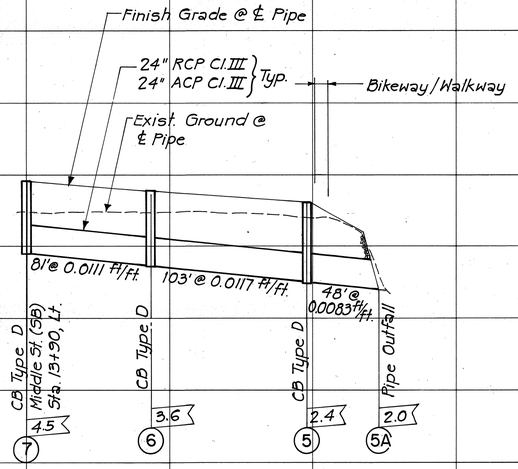

DRAINLINE #9

DRAINLINE #8 NOTE:

Contractor shall verify location and elevation of all existing utilities intersecting Drainline #8 prior to construction of any portion of Drainline #8.

ORIGINAL PLAN	SURVEY PLOTTED BY	DATE
	DRAWN BY	
	TRACED BY	
NOTE BOOK	DESIGNED BY	
	QUANTITIES BY	
No.	CHECKED BY	

WERNER BEUCHAT REGISTERED PROFESSIONAL ENGINEER No. 3393-E HAWAII, U.S.A.

THIS WORK WAS PREPARED BY ME OR UNDER MY SUPERVISION.

STATE OF HAWAII
DEPARTMENT OF TRANSPORTATION
HIGHWAYS DIVISION

DRAINAGE PROFILES

INTERSTATE ROUTE H-1
PROJECT NO. I-IR-HI-I(169):17

SCALE: HORIZ.: 1"=50' VERTICAL: 1"=5' DATE: 3/15/82

SHEET No. D-4 OF D-25 SHEETS

FED. ROAD DIST. NO.	STATE	FED. AID PROJ. NO.	FISCAL YEAR	SHEET NO.	TOTAL SHEETS
HAWAII	HAW.	I-IR-HI-1(169):17	1983	50	280

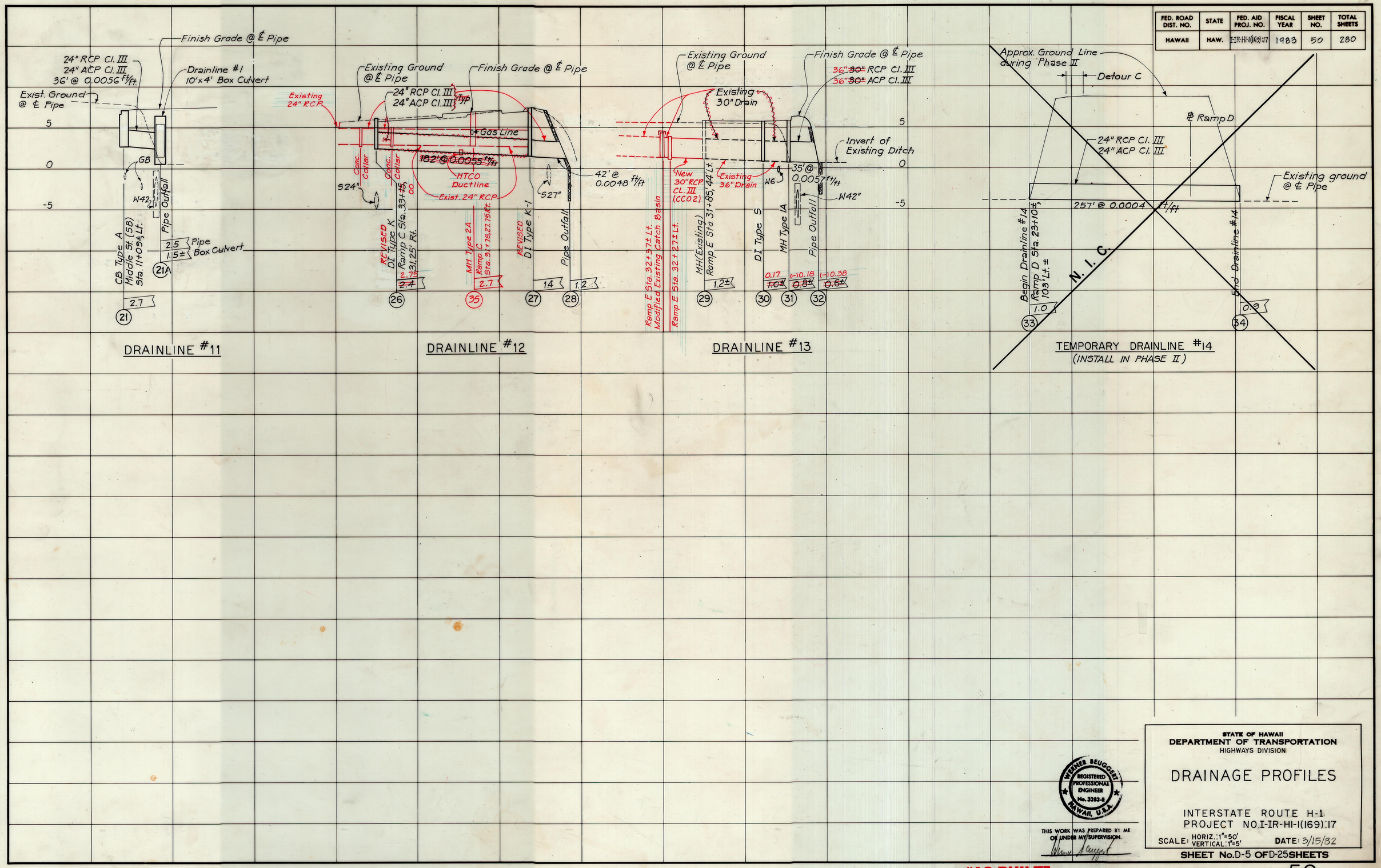

ORIGINAL PLAN	SURVEY PLOTTED BY	DATE
	DRAWN BY	"
	TRACED BY	"
NOTE BOOK	DESIGNED BY	"
No.	QUANTITIES BY	"
	CHECKED BY	"

WERNER BEUGGERT
REGISTERED PROFESSIONAL ENGINEER
No. 3383-E
HAWAII, U.S.A.

THIS WORK WAS PREPARED BY ME OR UNDER MY SUPERVISION.

STATE OF HAWAII
DEPARTMENT OF TRANSPORTATION
HIGHWAYS DIVISION

DRAINAGE PROFILES

INTERSTATE ROUTE H-1
PROJECT NO. I-IR-HI-1(169):17

SCALE: HORIZ.: 1"=50' VERTICAL: 1"=5'
DATE: 3/15/82

SHEET No. D-5 OF D-25 SHEETS

"AS-BUILT"

FED. ROAD DIST. NO.	STATE	FED. AID PROJ. NO.	FISCAL YEAR	SHEET NO.	TOTAL SHEETS
HAWAII	HAW.	I-IR-HI-1(169):17	1983	51	280

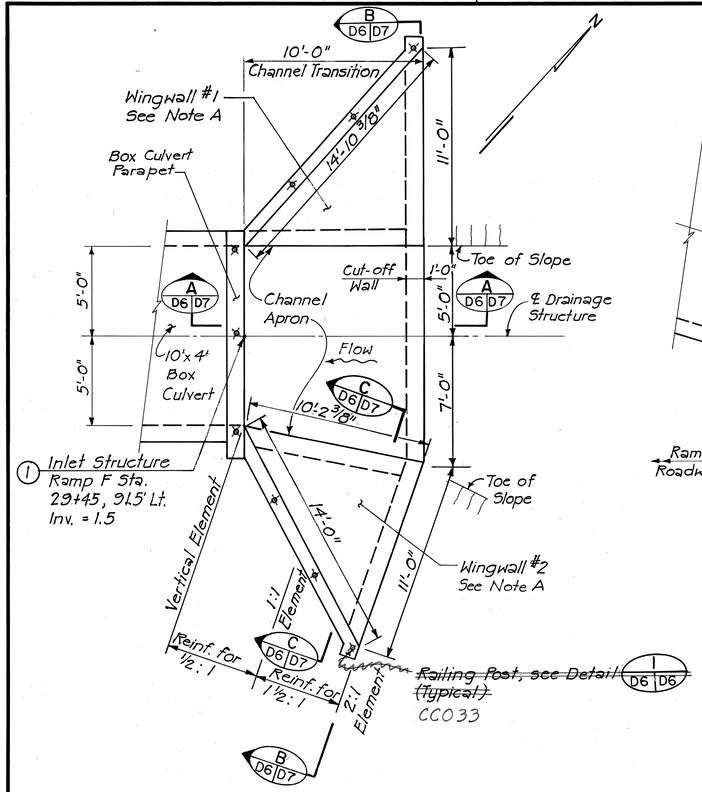

PLAN – DRAINAGE STRUCTURE NO. ①

Scale : 1/4" = 1'-0"

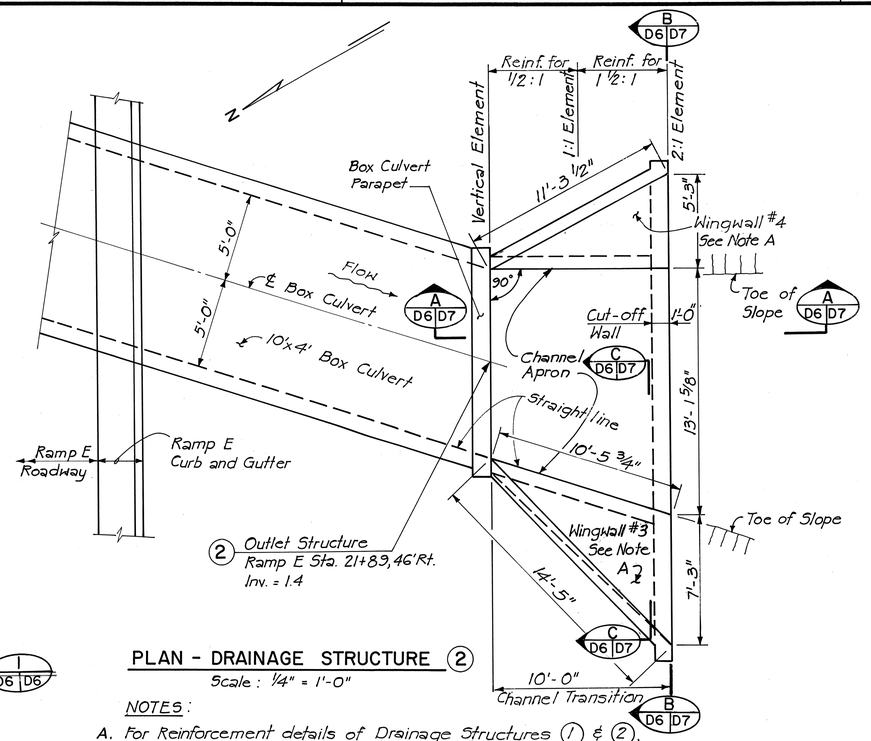

PLAN - DRAINAGE STRUCTURE ②

Scale : 1/4" = 1'-0"

NOTES :

A. For Reinforcement details of Drainage Structures ① & ②, See Sheets D-7 & D-8.

B. For Drainage Structure ② Construct Box Culvert Parapet & Channel Apron cut-off Wall parallel to Ramp E Curb & Gutter.

GENERAL NOTES FOR SHEETS D-6 THRU D-13.

1. Design Specifications :
   Standard Specifications for Highway Bridges AASHTO Specifications and Interim Specifications of current edition.

2. Design Stresses : fc' = 3000 psi, fc = 1200 psi n = 10 for concrete
   fs = 20,000 psi for Reinf. Steel

3. Materials :
   (a) All Reinf. Steel shall be ASTM Designation A 615 Grade 40.
   (b) All Concrete shall be Class A, unless noted.

4. All dimensions relating to Reinforcing are to centers of bars unless otherwise noted.

5. Except as otherwise noted, all exterior corners and re-entrance angles in concrete work shall be chamfered 3/4" x 3/4".

6. For Splices not detailed, overlap rebars 24 Bar Diameters or 12" minimum ; Stagger all splices as approved by the Engineer.

7. The Contractor shall verify the locations and Elevations of all existing utility lines and notify the respective owners before commencing excavation work for drainlines.

8. The Contractor shall have the option of furnishing and installing precast 10'x4' reinforced concrete box culvert sections in lieu of constructing 10'x4' cast-in-place box culvert for Drainline #1. Shop drawings shall be submitted to the Engineer for approval.

9. For Drainline #1 Structure Excavation Limits & Joint Details sheet No. D-8.

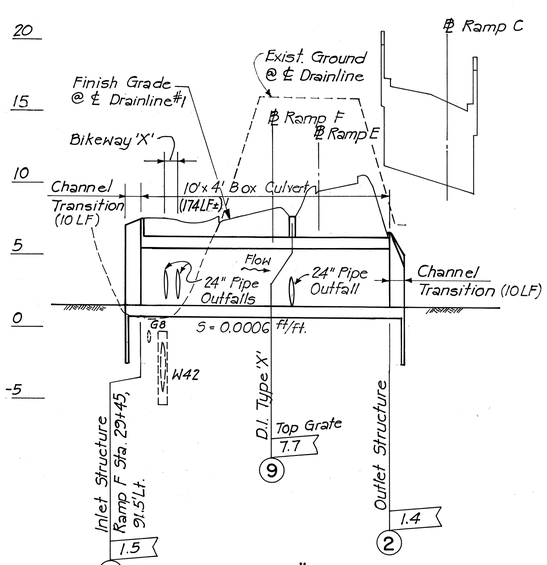

DRAINLINE #1

(10'x4' Box Culvert, See Sheet D-8 for Details)

Scale : Horiz. 1" = 50', Vert. 1" = 5'

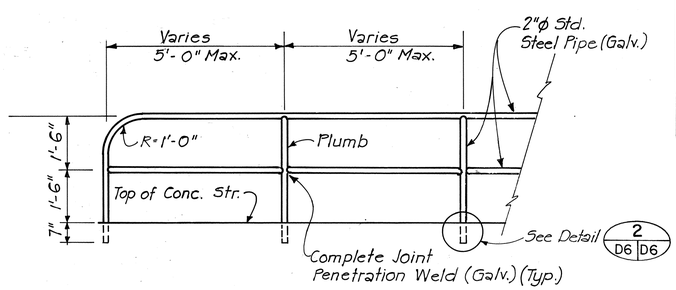

NOTE: Payment for railing will be considered incidental to various contract items.

RAILING DETAIL I D2, ~~D6, D7~~ D6

Scale : 1/2" = 1'-0"

ESTIMATED QUANTITIES FOR DRAINLINE #1 BOX CULVERT

ITEM NO.	ITEMS	UNIT	QUANTITY
604.6500	Drainline #1 Box Culvert	L.S.	See below
—	Structure Excavation for Drainline #1 Box Culvert	—	(560 C.Y.)
—	Structure Backfill for Drainline #1 Box Culvert	—	(165 C.Y.)
—	Class A Concrete for Drainline #1 Box Culvert	—	(200 C.Y.)
—	Reinforcing Steel in Drainline #1 Box Culvert	—	(35,500 Lbs)
—	Bed Course Material for Drainline #1 Box Culvert	—	(52 C.Y.)
—	Drop Intake Type 'X'	—	(1 EA)

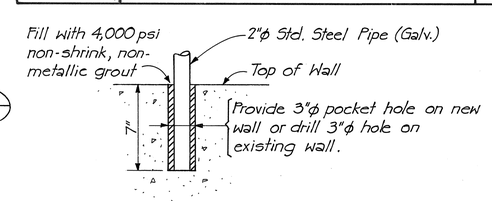

DETAIL 2 D6 D6

Scale : 1 1/2" = 1'-0"

WERNER BEUCCHI REGISTERED PROFESSIONAL ENGINEER No. 3383-E HAWAII, U.S.A.

THIS WORK WAS PREPARED BY ME OR UNDER MY SUPERVISION.

STATE OF HAWAII
DEPARTMENT OF TRANSPORTATION
LAND TRANSPORTATION FACILITIES DIVISION

DRAINLINE #1 DETAILS AND GENERAL NOTES

INTERSTATE ROUTE H-1
PROJECT NO. I-IR-HI-1(169):17

SCALE: AS SHOWN DATE: 3/15/82

SHEET No. D-6 OF D-25 SHEETS

ORIGINAL PLAN | SURVEY PLOTTED BY | DRAWN BY | TRACED BY | DESIGNED BY | QUANTITIES BY | CHECKED BY | DATE | NOTE BOOK | NO.

FED. ROAD DIST. NO.	STATE	AID NO.	FISCAL YEAR	SHEET NO.	TOTAL SHEETS
HAWAII	HAW	I-IR-HI-1(169):17	1983	52	280

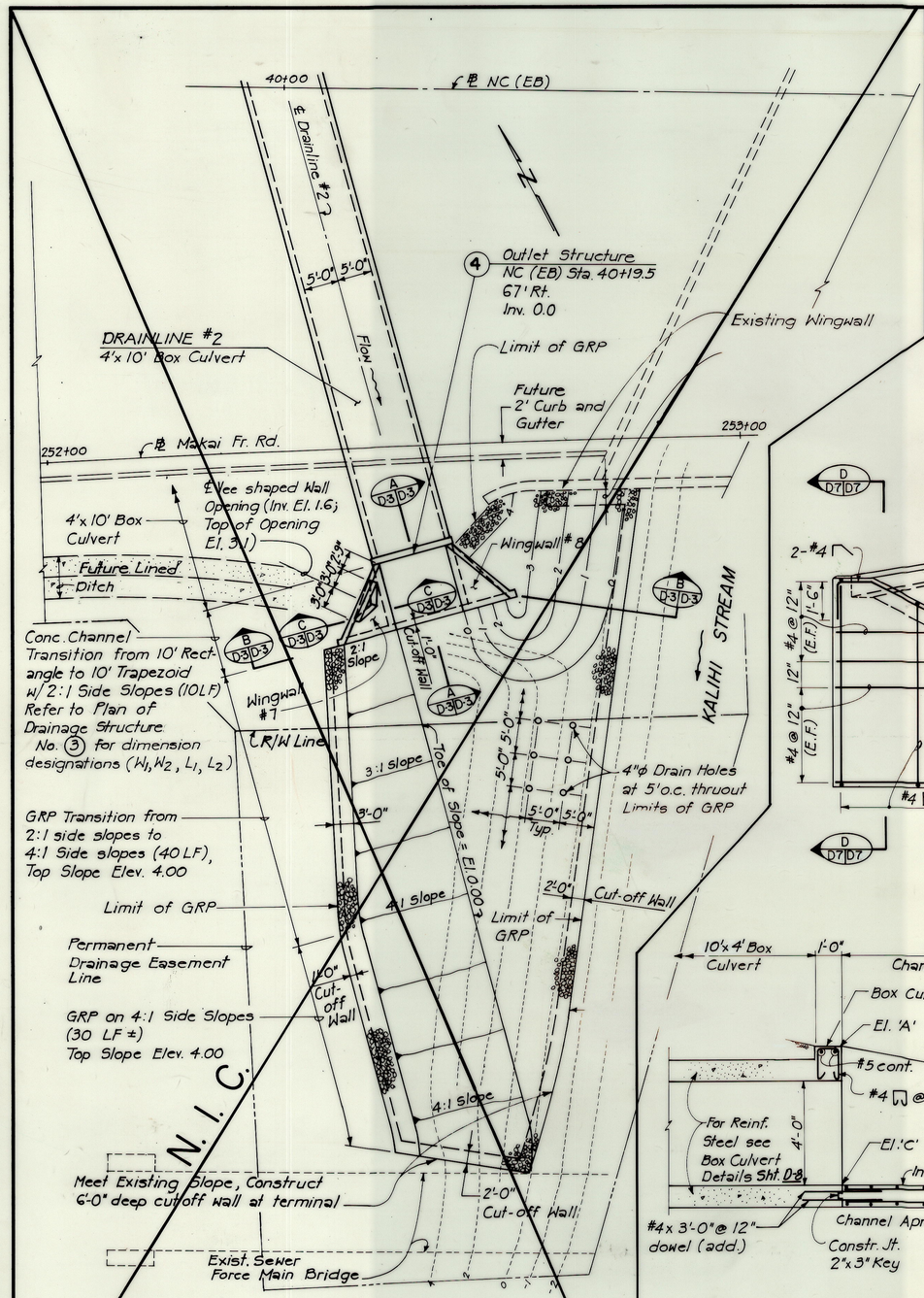

PLAN

DRAINAGE STRUCTURE NO. 4

Scale: 1" = 10'-0"

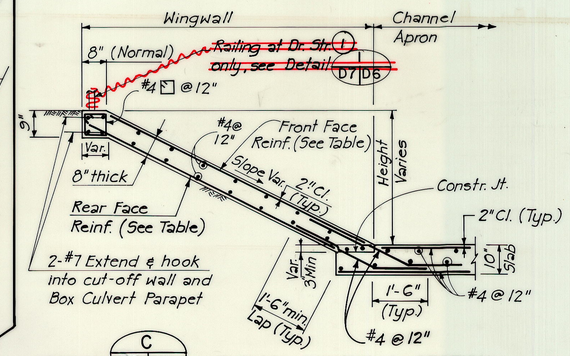

SECTION C (D6 | D7) – TYPICAL WINGWALL SECTION

N.T.S.

WINGWALLS FOR CHANNEL TRANSITIONS					
ELEMENT SLOPE		DRAINAGE STR. 1		DRAINAGE STR. 2	
		Wingwall #1	Wingwall #2	Wingwall #3	Wingwall #4
1/2 : 1	Front & Rear Face Reinf.	#4 @ 12"	#4 @ 12"	#4 @ 12"	#4 @ 12"
1 1/2 : 1	Front Face Reinf. / Rear Face Reinf.	#4 @ 12" / #5 @ 9"	#4 @ 12" / #5 @ 9"	#4 @ 12" / #4 @ 9"	#4 @ 12" / #4 @ 9"
El. 'A'		7.50	7.50	6.80	6.80
El. 'B'		7.00	7.00	5.00	4.00
El. 'C' and El. 'D'		1.5	1.5	1.4	1.4

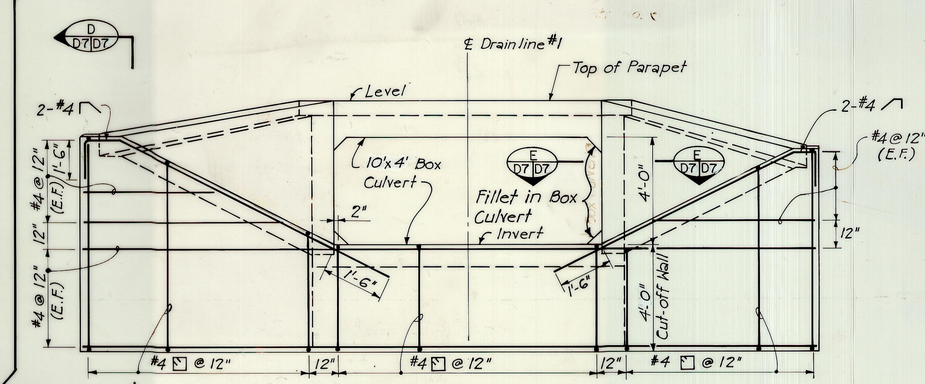

SECTION B (D6 | D7)

Not to Scale

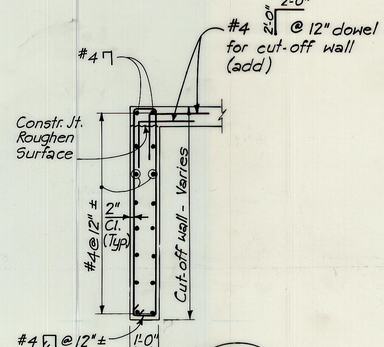

SECTION D (D7 | D7)

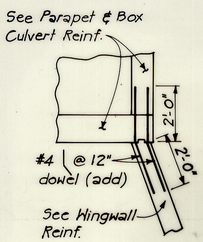

SECTION E (D7 | D7)

WALL CONNECTION DETAIL

Scale: 3/8" = 1'-0"

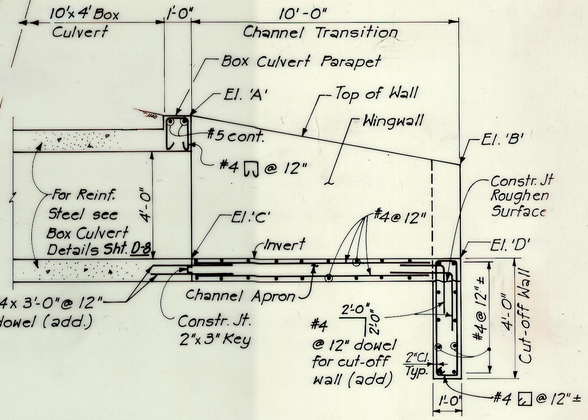

SECTION A (D6 | D7)

Not to Scale

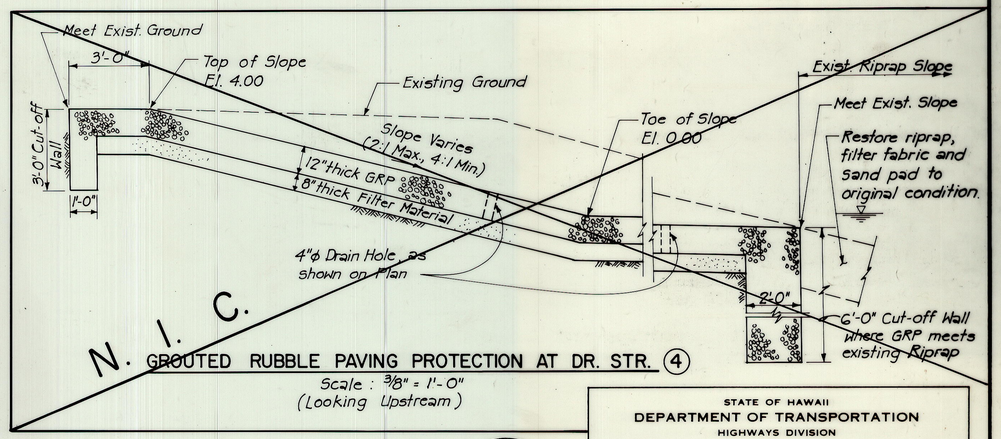

GROUTED RUBBLE PAVING PROTECTION AT DR. STR. 4

Scale: 3/8" = 1'-0"

(Looking Upstream)

NOTE:

For General Notes see Sheet D-6.

JOHN P. JOHNSON REGISTERED PROFESSIONAL ENGINEER No. 3647 HAWAII, U.S.A.

THIS WORK WAS PREPARED BY ME OR UNDER MY SUPERVISION.

John P. Johnson

STATE OF HAWAII
DEPARTMENT OF TRANSPORTATION
HIGHWAYS DIVISION

DRAINLINE #1 DETAILS

INTERSTATE ROUTE H-1
PROJECT NO. I-IR-HI-1(169):17

SCALE: AS SHOWN DATE: 6/15/81

SHEET No. D-7 OF D-25 SHEETS

ORIGINAL PLAN | SURVEY PLOTTED BY | DRAWN BY | TRACED BY | DESIGNED BY | QUANTITIES BY | CHECKED BY | DATE | NOTE BOOK | No.

"AS-BUILT"

FED. ROAD DIST. NO.	STATE	FED. AID PROJ. NO.	FISCAL YEAR	SHEET NO.	TOTAL SHEETS
HAWAII	HAW.	I-IR-HI-I(169):17	1983	53	280

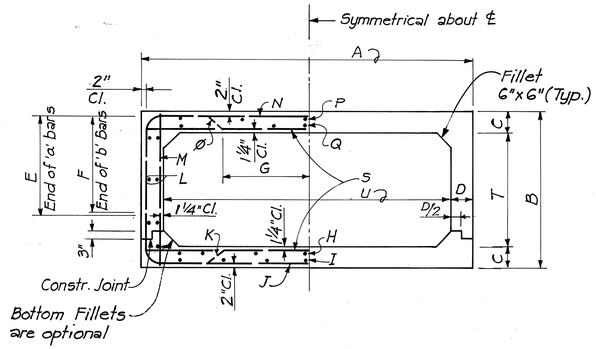

TYPE 'a' BAR

TYPE 'b' BAR

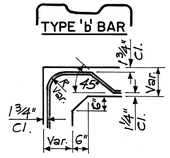

TYPICAL BEND OF MAIN BAR

TYPICAL BOX CULVERT SECTION FOR DRAINLINE NOS. 1 & 8

Not to Scale

(For General Notes, see Sheet D-6)

BOX CULVERT SCHEDULES

	MARK	BOX CULVERT Drainline #1	BOX CULVERT 'II' Drainline #8	BOX CULVERT 'III' Drainline #8
BOX CULVERT DIMENSIONS	A	11'-8"	5'-3"	Varies, 9'-6" Max.
	B	5'-8"	Varies, 3'-8¼" Max.	Varies, 4'-3½" Max.
	C	0'-10"	0'-7½"	0'-9½"
	D	0'-10"	0'-7½"	0'-9"
	E	3'-6"	2'-7"	3'-7"
	F	3'-6"	1'-6"	3'-3"
	G	3'-6"	1'-6"	3'-0"
	R	0'-7"	0'-6"	0'-7"
	T	4'-0"	Varies, 2'-5¼" Max.	Varies, 3'-3½" Max.
	U	10'-0"	4'-0"	8'-0"
BOX CULVERT REINFORCEMENT	H	#4 @ 9"	#4 @ 8"	#4 @ 9"
	I	#4 @ 18"	#4 @ 18"	#4 @ 18"
	J (Type 'a' Bars)	#5 @ 12"	#4 @ 12"	#4 @ 10"
	K (Type 'b' Bars)	#6 @ 12"	#4 @ 12"	#5 @ 10"
	L	#4 @ 18"	#4 @ 14"	#4 @ 18"
	M	#4 @ 18"	#4 @ 18"	#4 @ 15"
	N (Type 'a' Bars)	#5 @ 12"	#4 @ 12"	#4 @ 10"
	Ø (Type 'b' Bars)	#6 @ 12"	#4 @ 12"	#5 @ 10"
	P	#4 @ 18"	#4 @ 18"	#4 @ 18"
	Q	#6 @ 12"	#4 @ 8"	#5 @ 10"
	S	#6 @ 6" (Alt. Bars Bent)	#4 @ 4" (Every Third Bar Bent)	#5 @ 5" (Alt. Bars Bent)
	Transition	—	—	See Detail I D-9 D-10

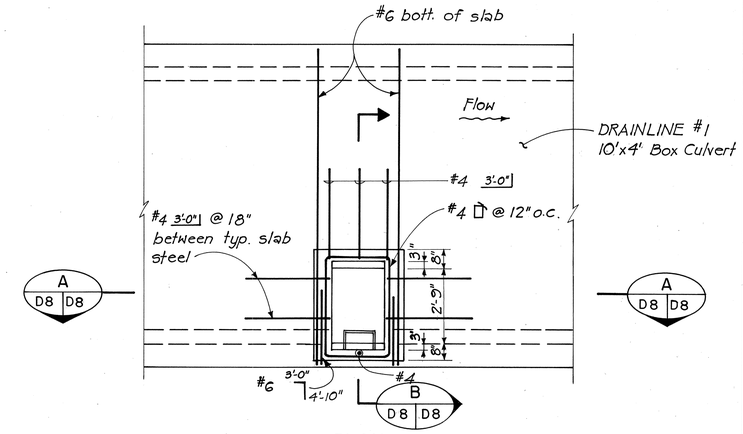

PLAN

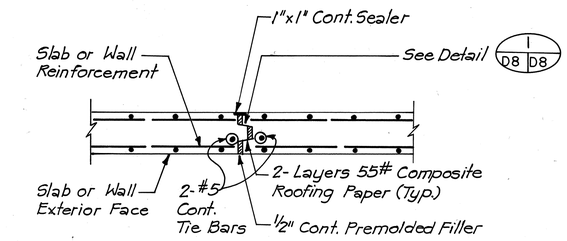

TYPICAL TRANSVERSE JOINT

Not to Scale

NOTE: Spacing of Joints @ 20'-0" max.

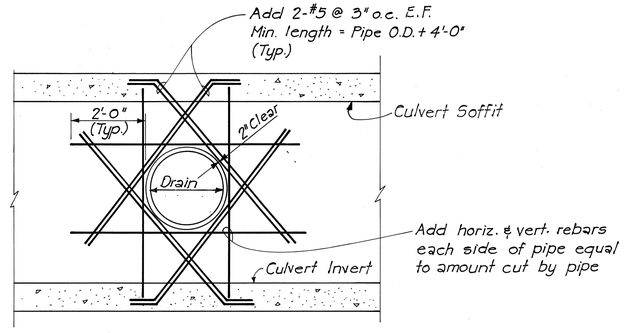

PIPE OUTFALL NOS. 8A, 11A & 21A

Not to Scale

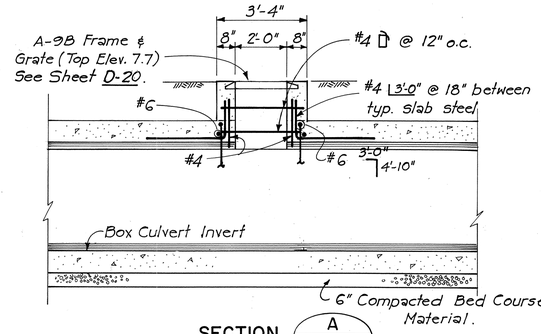

SECTION A D8 D8

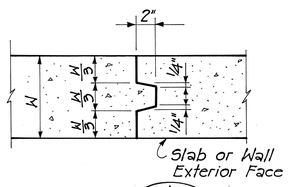

DETAIL I D8 D8

Not to Scale

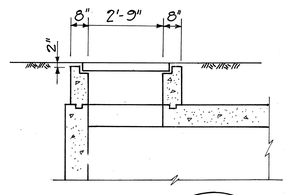

SECTION B D8 D8

NOTES:

1. All reinforcing symmetrical except as noted.
2. All reinforcing shown is in addition to typical box culvert reinforcing.
3. Cut or bend typical reinforcing as required to clear opening.
4. For General Notes see Sheet D-6.
5. Payment for DI Type 'X', including A-9B Frame and Grate, will be made under item 604.6500

DROP INTAKE TYPE 'X'

Scale: 3/8" = 1'-0"

(Drainage Structure No. 9)

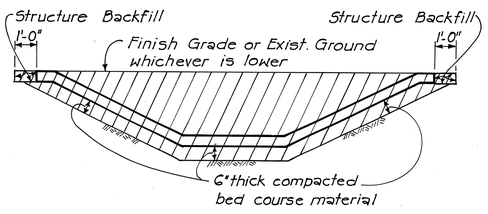

CHANNEL TRANSITION

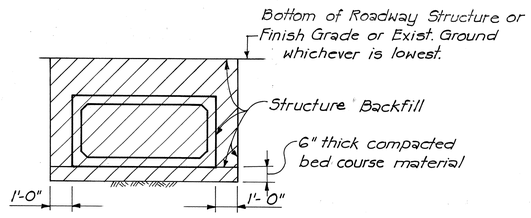

CONC. BOX CULVERT

NOTE A:

The Hatched Area denotes Limits of Structure Excavation.
All other excavation shall be Roadway Excavation except as otherwise noted.

STRUCTURE EXCAVATION LIMITS

Not to Scale

ORIGINAL PLAN	SURVEY PLOTTED BY	DATE
	DRAWN BY	
	TRACED BY	
NOTE BOOK	DESIGNED BY	
	QUANTITIES BY	
No.	CHECKED BY	

JOHN P. JOHNSON REGISTERED PROFESSIONAL ENGINEER No. 3647 HAWAII U.S.A.

THIS WORK WAS PREPARED BY ME OR UNDER MY SUPERVISION.

John P. Johnson

STATE OF HAWAII
DEPARTMENT OF TRANSPORTATION
LAND TRANSPORTATION FACILITIES DIVISION

DRAINLINE #1 & #8 DETAILS

INTERSTATE ROUTE H-1
PROJECT NO. I-IR-HI-1(169):17

SCALE: AS SHOWN DATE: 3/15/82

SHEET No. D-8 OF D-25 SHEETS

FED. ROAD DIST. NO.	STATE	FED. AID PROJ. NO.	FISCAL YEAR	SHEET NO.	TOTAL SHEETS
HAWAII	HAW.	I-IR-HI-1(169):17	1983	54	280

ELEVATIONS BOX CULVERTS II & III TOP OF DECK SLAB	
Point	Elevation
A	5.11
B	5.11
C	5.61
D	5.61
E	6.32
F	6.32
G	6.75
H	6.75
I	6.75
J	6.53
K	6.53

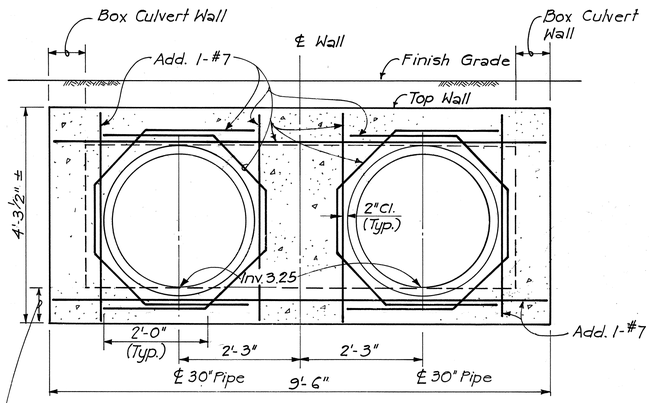

SECTION C D9 D9 — BOX CULVERT HEADWALL - DRAINAGE STRUCTURE NO. 19

Scale: 3/4" = 1'-0"

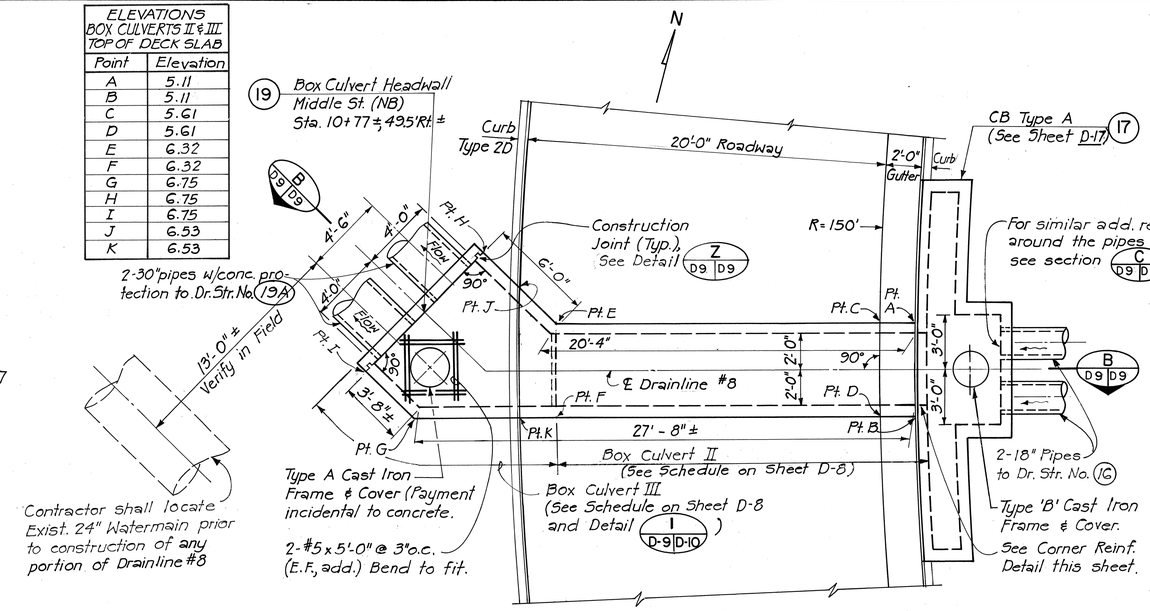

PLAN - DRAINAGE STRUCTURE NOS. 17, 19 & BOX CULVERTS II & III

Scale: 1/4" = 1'-0"

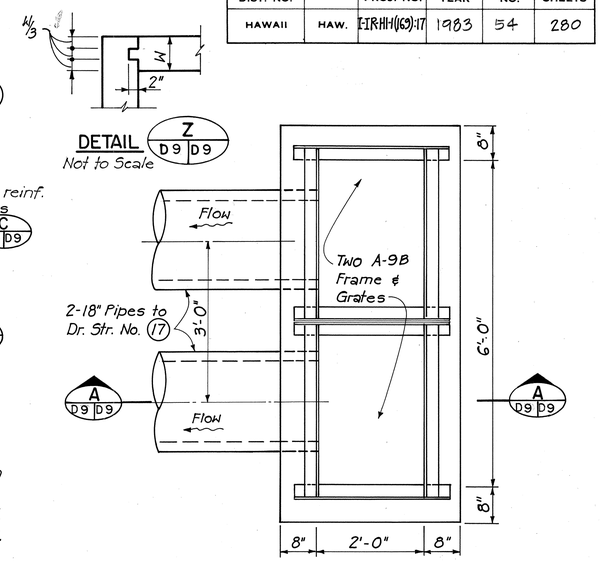

PLAN - DRAINAGE STRUCTURE NO. 16 (D.I. TYPE R)

Scale: 3/4" = 1'-0"

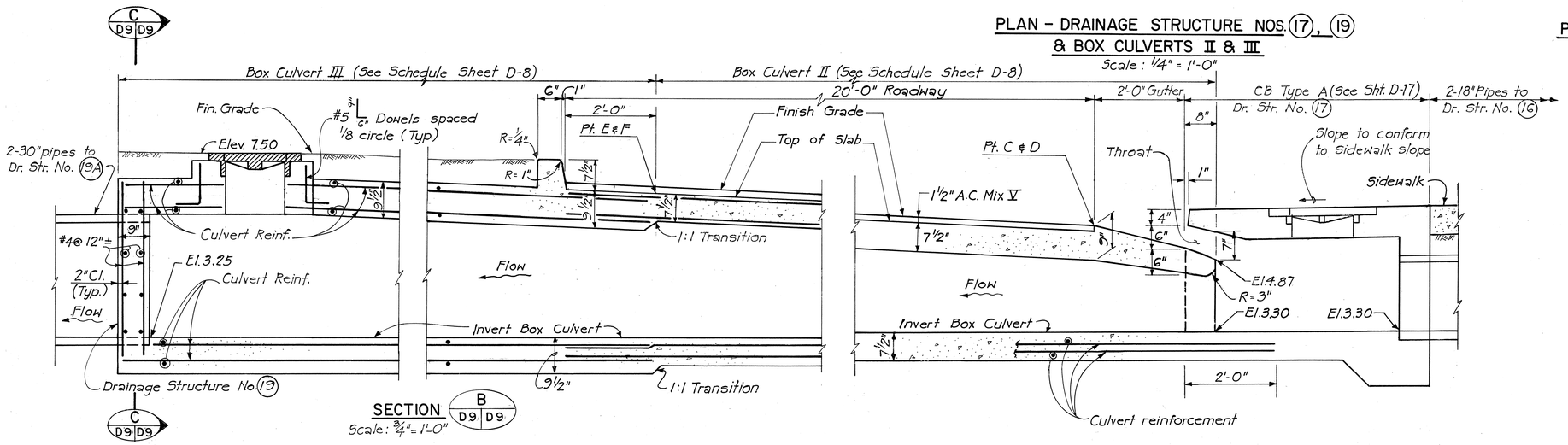

SECTION B D9 D9

Scale: 3/4" = 1'-0"

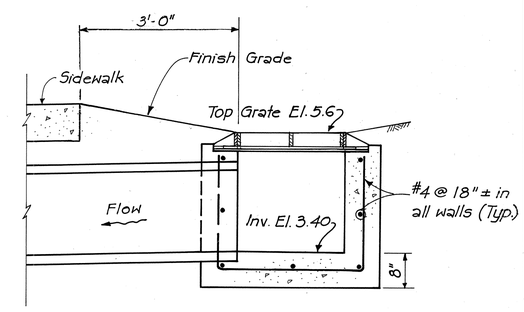

SECTION A D9 D9

Scale: 3/4" = 1'-0"

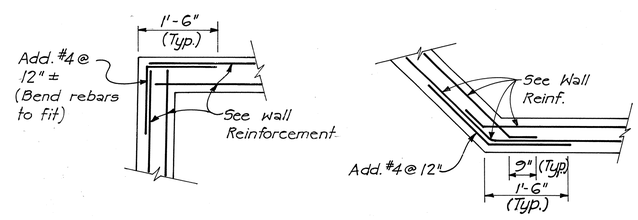

90° CORNER

45° CORNER

TYPICAL HORIZONTAL REINFORCEMENT AT CORNERS

Scale: 3/4" = 1'-0"

SHEET D-9 NOTE:

For General Notes see Sheet D-6.

JOHN P. JOHNSON REGISTERED PROFESSIONAL ENGINEER No. 3647 HAWAII, U.S.A.

THIS WORK WAS PREPARED BY ME OR UNDER MY SUPERVISION.

John P. Johnson

STATE OF HAWAII
DEPARTMENT OF TRANSPORTATION
LAND TRANSPORTATION FACILITIES DIVISION

DRAINLINE #8 DETAILS

INTERSTATE ROUTE H-1
PROJECT NO. I-IR-HI-1(169):17

SCALE: AS SHOWN DATE: 3/15/82

SHEET No. D-9 OF D-25 SHEETS

ORIGINAL PLAN | SURVEY PLOTTED BY | DRAWN BY | TRACED BY | DESIGNED BY | QUANTITIES BY | CHECKED BY | DATE | NOTE BOOK | No.

FED. ROAD DIST. NO.	STATE	FED. AID PROJ. NO.	FISCAL YEAR	SHEET NO.	TOTAL SHEETS
HAWAII	HAW.	I-IR-HI-1(169):17	1983	55	280

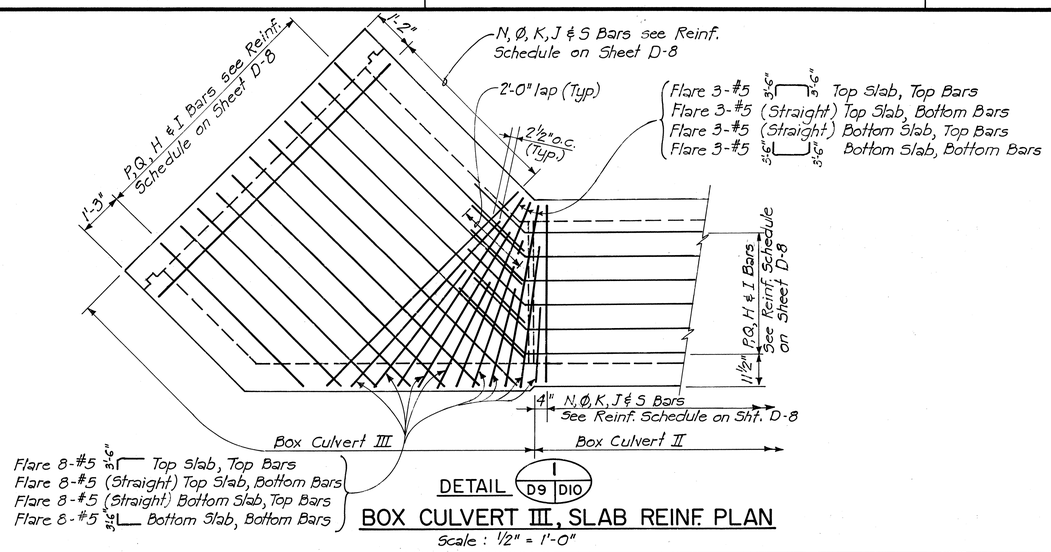

DETAIL I D9 D10

BOX CULVERT III, SLAB REINF. PLAN

Scale: ½" = 1'-0"

ESTIMATED QUANTITIES FOR DRAINLINE #8 BOX CULVERT			
ITEM NO.	ITEMS	UNIT	QUANTITY
604.6600	Drainline #8 Box Culvert	L.S.	See below
—	Structure Excavation for Drainline #8 Box Culvert	—	(31 C.Y.)
—	Structure Backfill for Drainline #8 Box Culvert	—	(10 C.Y.)
—	Class A Concrete for Drainline #8 Box Culvert	—	(13 C.Y.)
—	Reinforcing Steel in Drainline #8 Box Culvert	—	(2900 LBS)
—	Bed Course Material for Drainline #8 Box Culvert	—	(5 C.Y.)

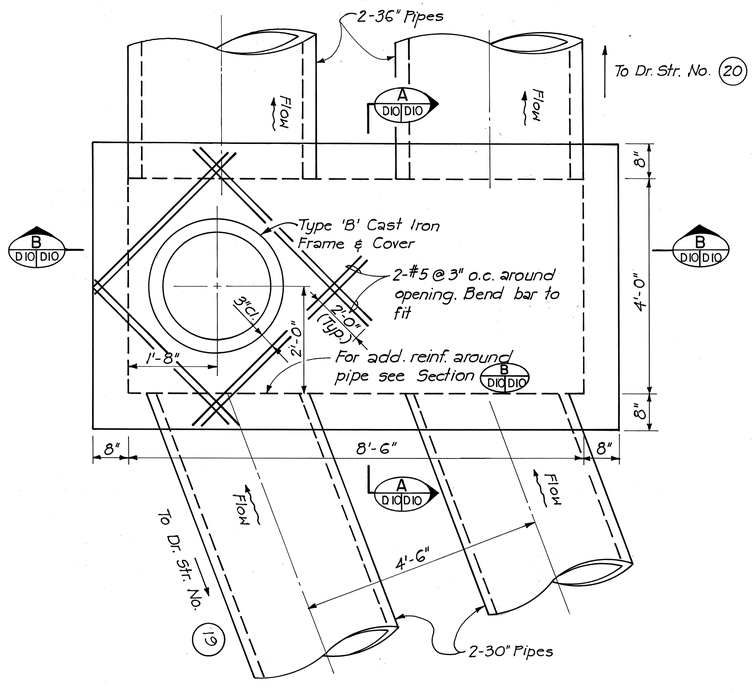

PLAN

Scale: ¾" = 1'-0"

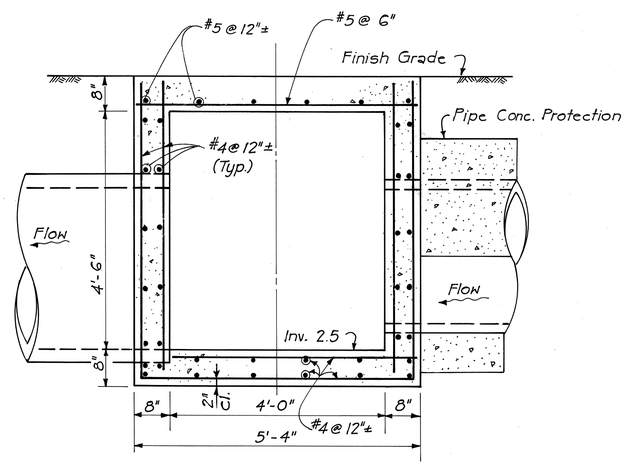

SECTION A D10 D10

Scale: ¾" = 1'-0"

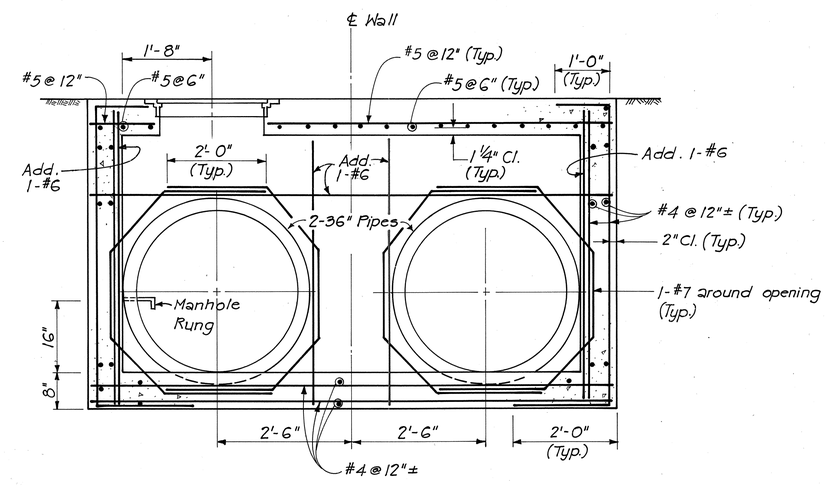

SECTION B D10 D10

Scale: ¾" = 1'-0"

MANHOLE TYPE T

DRAINAGE STRUCTURE NO. 19A

NOTE:
For General Notes see Sheet D-6.

JOHN P. JOHNSON REGISTERED PROFESSIONAL ENGINEER No. 3647 HAWAII U.S.A.

THIS WORK WAS PREPARED BY ME OR UNDER MY SUPERVISION.

John P. Johnson

STATE OF HAWAII
DEPARTMENT OF TRANSPORTATION
LAND TRANSPORTATION FACILITIES DIVISION

DRAINLINE #8 DETAILS

INTERSTATE ROUTE H-1
PROJECT NO. I-IR-HI-1(169):17

SCALE: AS SHOWN DATE: 3/15/82

SHEET No. D-10 OF D-25 SHEETS

ORIGINAL PLAN | SURVEY PLOTTED BY | DRAWN BY | TRACED BY | DESIGNED BY | QUANTITIES BY | CHECKED BY | DATE | NOTE BOOK | No.

FED. ROAD DIST. NO.	STATE	FED. AID PROJ. NO.	FISCAL YEAR	SHEET NO.	TOTAL SHEETS
HAWAII	HAW.	I-IR-HI-1(169):17	1983	56	280

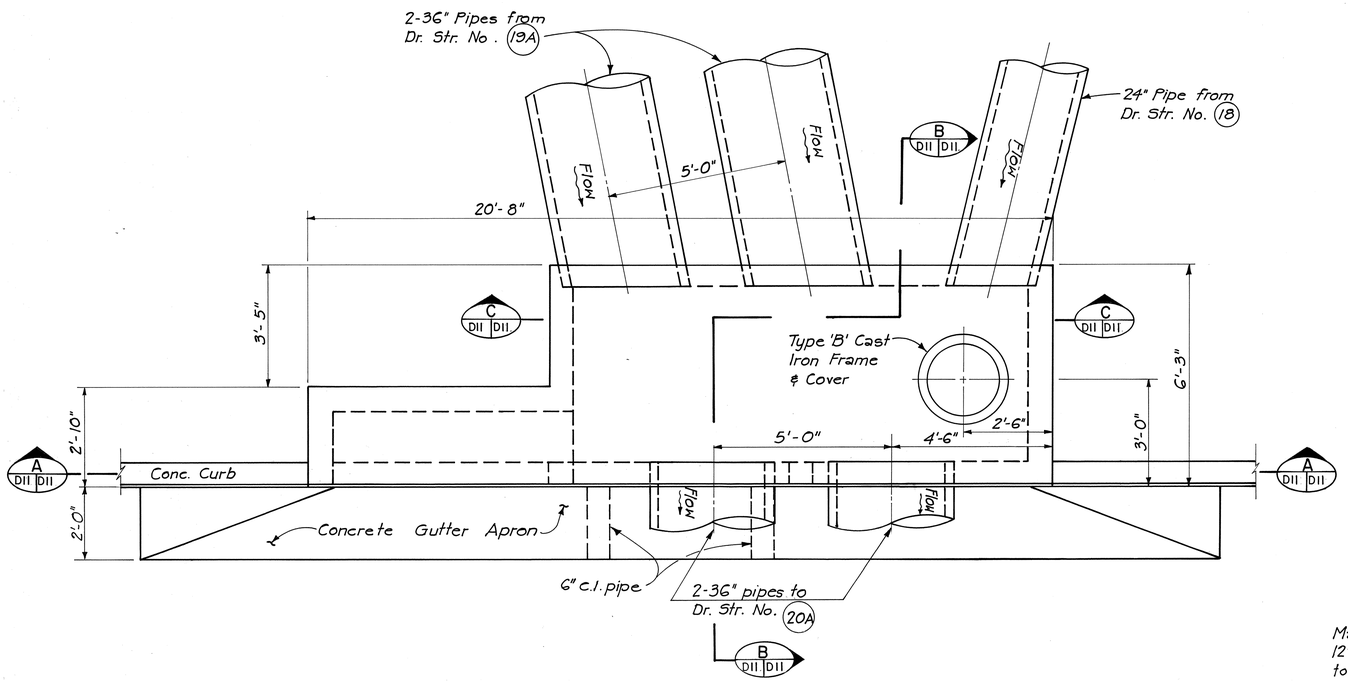

PLAN
Scale : 1/2" = 1'-0"

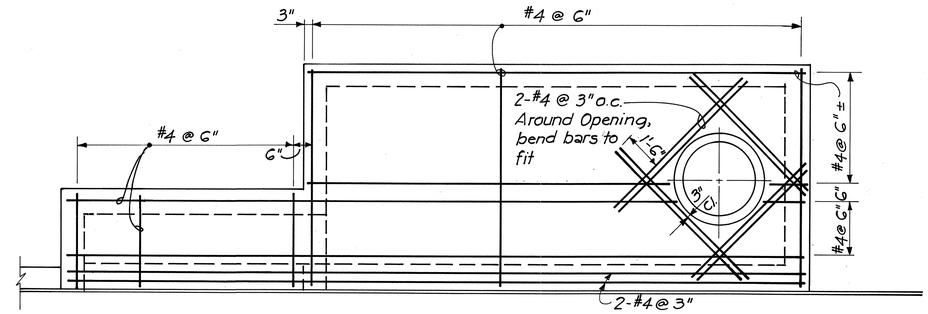

ROOF SLAB REINFORCEMENT
N.T.S.

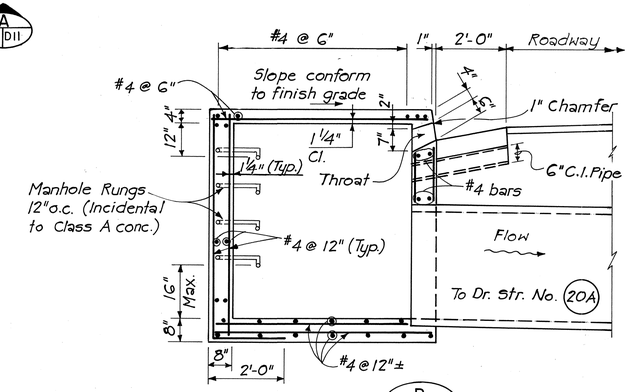

SECTION B DII DII

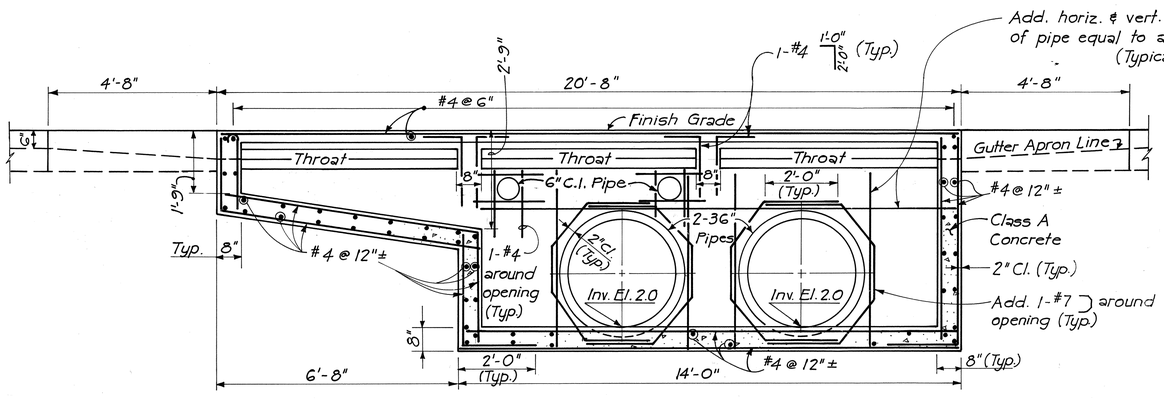

SECTION A DII DII
Scale: 1/2" = 1'-0"

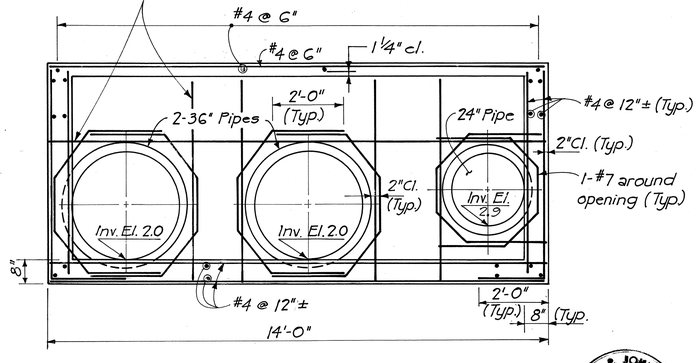

SECTION C DII DII
Scale: 1/2" = 1'-0"

NOTES:

1. Payment for furnishing and installing 6" Cast Iron Pipes shall be considered incidental to the Various Contract Items.
2. For General Notes see Sheet D-6.

CATCH BASIN TYPE 'F'
DRAINAGE STRUCTURE NO. 20

JOHN P. JOHNSON REGISTERED PROFESSIONAL ENGINEER No. 3647 HAWAII, U.S.A.

THIS WORK WAS PREPARED BY ME OR UNDER MY SUPERVISION.
John P. Johnson

STATE OF HAWAII
DEPARTMENT OF TRANSPORTATION
LAND TRANSPORTATION FACILITIES DIVISION

DRAINLINE #8 DETAILS

INTERSTATE ROUTE H-1
PROJECT NO. I-IR-HI-1(169):17

SCALE: AS SHOWN DATE: 3/15/82

SHEET No. D-11 OF D-25 SHEETS

ORIGINAL PLAN | SURVEY PLOTTED BY | DRAWN BY | TRACED BY | DESIGNED BY | QUANTITIES BY | CHECKED BY | DATE | NOTE BOOK | No.

FED. ROAD DIST. NO.	STATE	FED. AID PROJ. NO.	FISCAL YEAR	SHEET NO.	TOTAL SHEETS
HAWAII	HAW.	IR-HI-1(63)17	1983	57	280

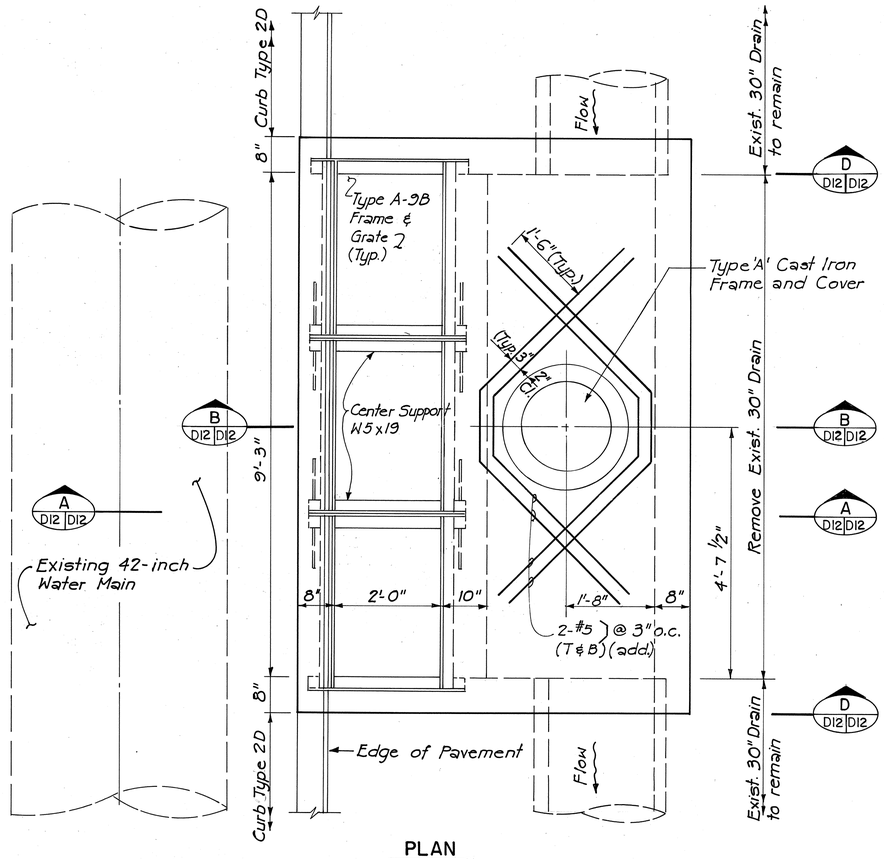

PLAN
Scale: 3/4" = 1'-0"

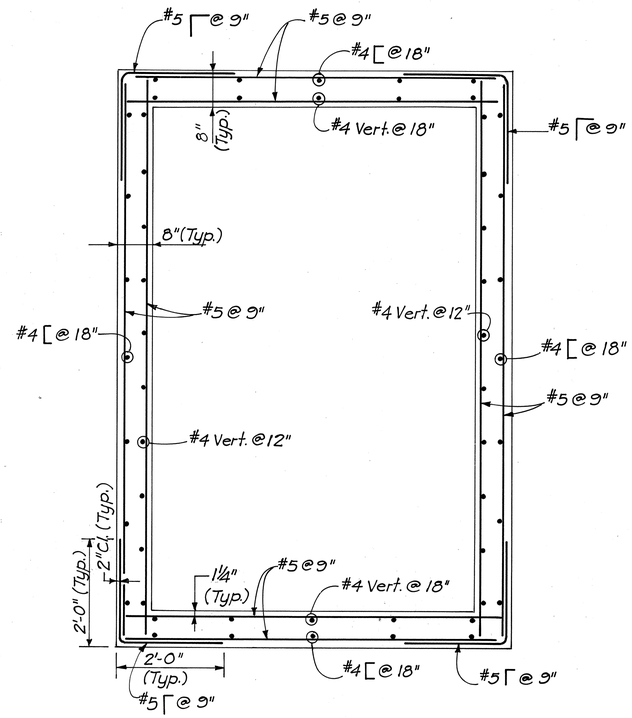

SECTION C D12 D12
Scale: 3/4" = 1'-0"

NOTE:
For General Notes see sheet D-6.

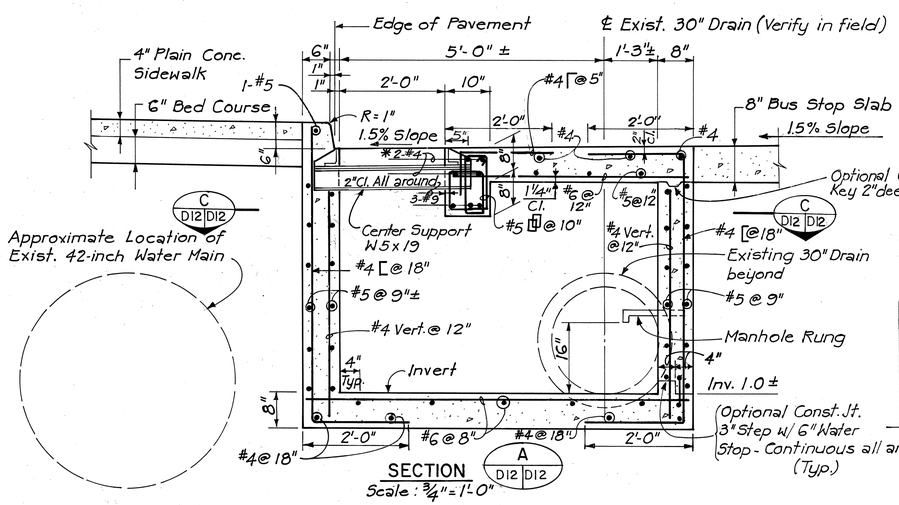

SECTION A D12 D12
Scale: 3/4" = 1'-0"

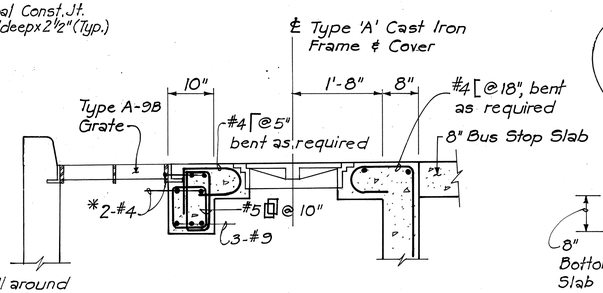

SECTION B D12 D12
Scale: 3/4" = 1'-0"

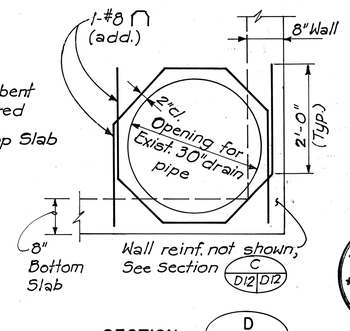

SECTION D D12 D12
Scale: 3/4" = 1'-0"

DRAINAGE STRUCTURE NO. 30
DROP INTAKE TYPE 'S'

*NOTE: Drill hole in Center Support W5x18.5 to run re-bar through.

JOHN P. JOHNSON
REGISTERED PROFESSIONAL ENGINEER
No. 3647
HAWAII, U.S.A.

THIS WORK WAS PREPARED BY ME OR UNDER MY SUPERVISION.
John P. Johnson

STATE OF HAWAII
DEPARTMENT OF TRANSPORTATION
HIGHWAYS DIVISION

DRAINAGE DETAILS

INTERSTATE ROUTE H-1
PROJECT NO. I-IR-HI-1(169)17

SCALE: AS SHOWN DATE: 3/15/82

SHEET No. D-12 OF D-25 SHEETS

ORIGINAL PLAN		DATE
	SURVEY PLOTTED BY	
	DRAWN BY	
	TRACED BY	
	DESIGNED BY	
NOTE BOOK	QUANTITIES BY	
No.	CHECKED BY	

FED. ROAD DIST. NO.	STATE	FED. AID PROJ. NO.	FISCAL YEAR	SHEET NO.	TOTAL SHEETS
HAWAII	HAW.	I-IR-HI-(169)17	1983	58	280

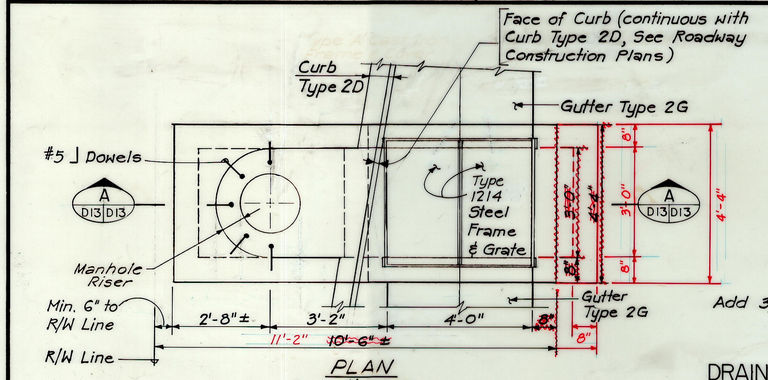

PLAN

Scale: 1/2" = 1'-0"

(NOTE: Only dowels around circular Manhole Riser shown, see Section A D13 D13 for other re-bars

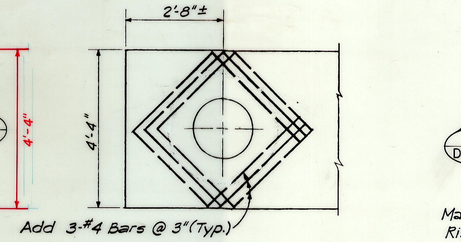

PLAN OF REINFORCEMENT OF ROOF SLAB AT MANHOLE RISER -

DRAINAGE STRUCTURES NO'S (27), (33) & (34)

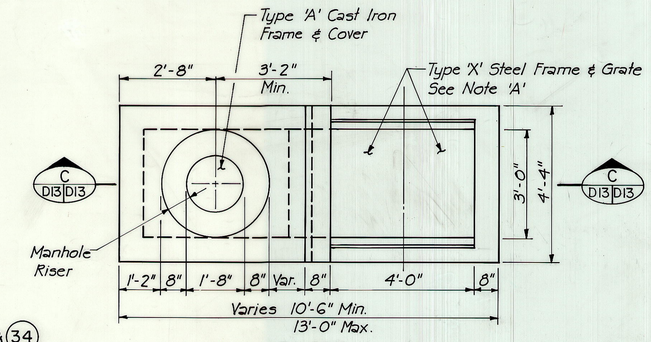

PLAN

NOTE 'A':
Type 'X' Steel Frame & Grate for Drainage Structures No's (33) & (34) will be made available at the State Field Office at the corner of Kakoi Street and Kilihau Street. The Contractor shall modify the Steel Grates as shown in Detail I D13 D13

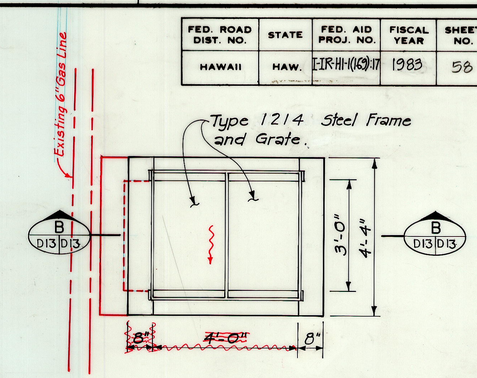

PLAN

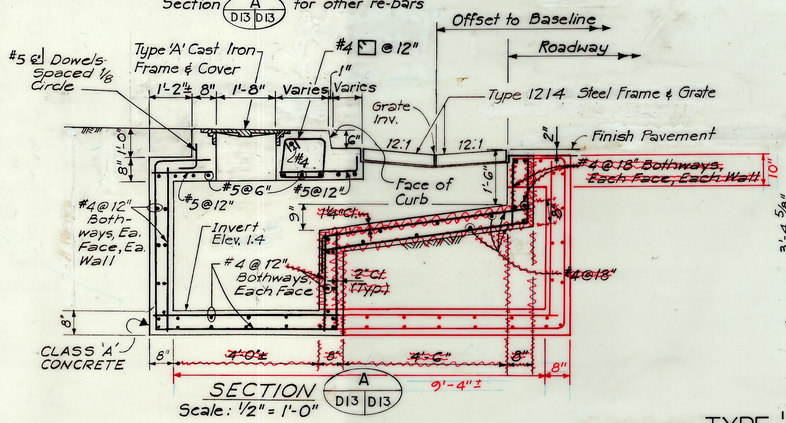

SECTION A D13 D13

Scale: 1/2" = 1'-0"

DRAINAGE STRUCTURE NO. (27)

REVISED DROP INTAKE TYPE 'K-1'

(C.C.O. 28)

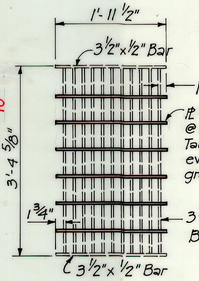

DETAIL I D13 D13

TYPE 'X' STEEL GRATE

N.T.S.

NOTE: Modify furnished grates by tack welding 6 ft's to each grate. (Payment shall be considered incidental to 'Type ___ Drop Intake'.)

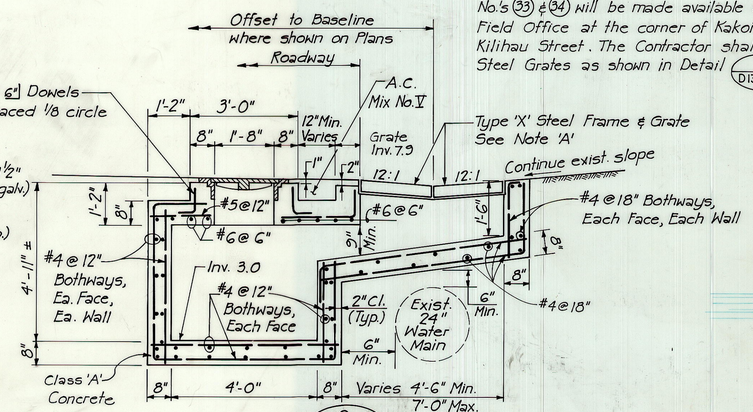

SECTION C D13 D13

DRAINAGE STRUCTURE NO. (34)

DROP INTAKE TYPE 'K-3'

Scale: 1/2" = 1'-0"

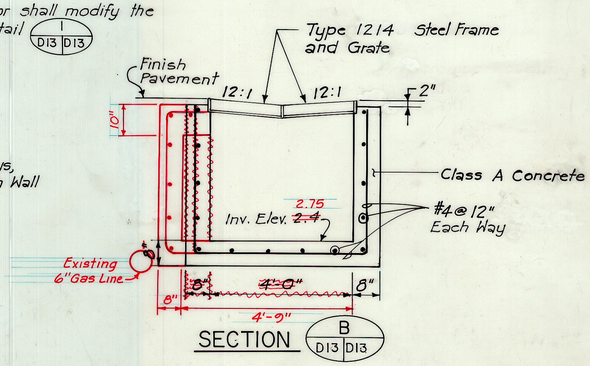

SECTION B D13 D13

DRAINAGE STRUCTURE NO. (26)

REVISED DROP INTAKE TYPE 'K' (C.C.O. 28)

Scale: 1/2" = 1'-0"

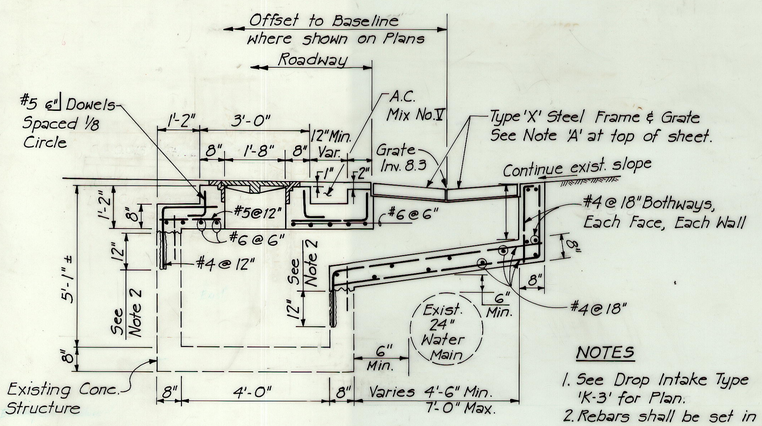

NOTES

1. See Drop Intake Type 'K-3' for Plan.
2. Rebars shall be set in epoxy adhesive filled, drilled-in holes.

DRAINAGE STRUCTURE NO. (33)

DROP INTAKE TYPE 'K-2'

Scale: 1/2" = 1'-0"

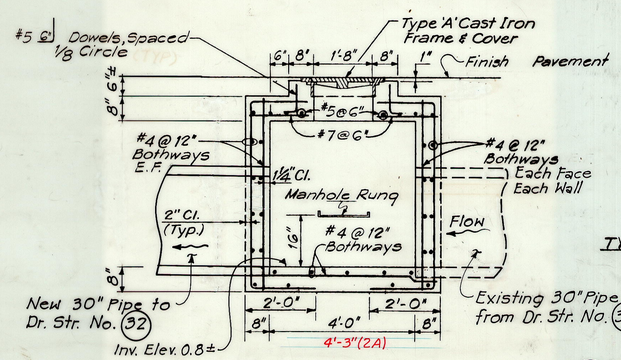

DRAINAGE STRUCTURE NO. (31) & (35)

MANHOLE TYPE 'IA' & '2A' (SEC. A-A)

Scale: 1/2" = 1'-0"

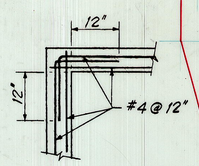

PLAN VIEW

TYPICAL CORNER DETAIL

Not to Scale

NOTE:
For General Notes regarding concrete structures & reinforcing steel, see Sheet D-6.

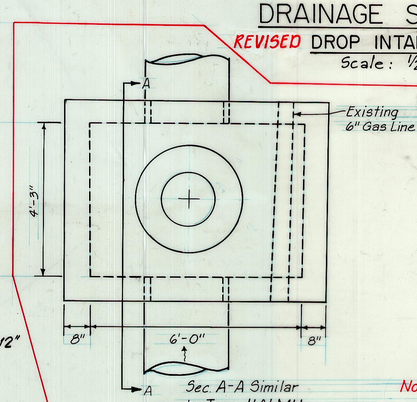

DRAINAGE STRUCTURE NO. (35)

MANHOLE TYPE '2A'

(CCO 28)

Note: This detail prepared during "As-Built" posting.

WERNER BEUGGERT REGISTERED PROFESSIONAL ENGINEER No. 3383-E HAWAII, U.S.A.

THIS WORK WAS PREPARED BY ME OR UNDER MY SUPERVISION.

STATE OF HAWAII
DEPARTMENT OF TRANSPORTATION
LAND TRANSPORTATION FACILITIES DIVISION

DRAINAGE DETAILS

INTERSTATE ROUTE H-1
PROJECT NO. I-IR-HI-1(169):17

SCALE: AS SHOWN DATE: 3/15/82

SHEET No. D-13 OF D-25 SHEETS

ORIGINAL PLAN | SURVEY PLOTTED BY | DRAWN BY | TRACED BY | DESIGNED BY | QUANTITIES BY | CHECKED BY | DATE | NOTE BOOK | No.

"AS-BUILT"

FED. ROAD DIST. NO.	STATE	FED. AID PROJ. NO.	FISCAL YEAR	SHEET NO.	TOTAL SHEETS
HAWAII	HAW.	I-IR-HI(169):17	1983	59	280

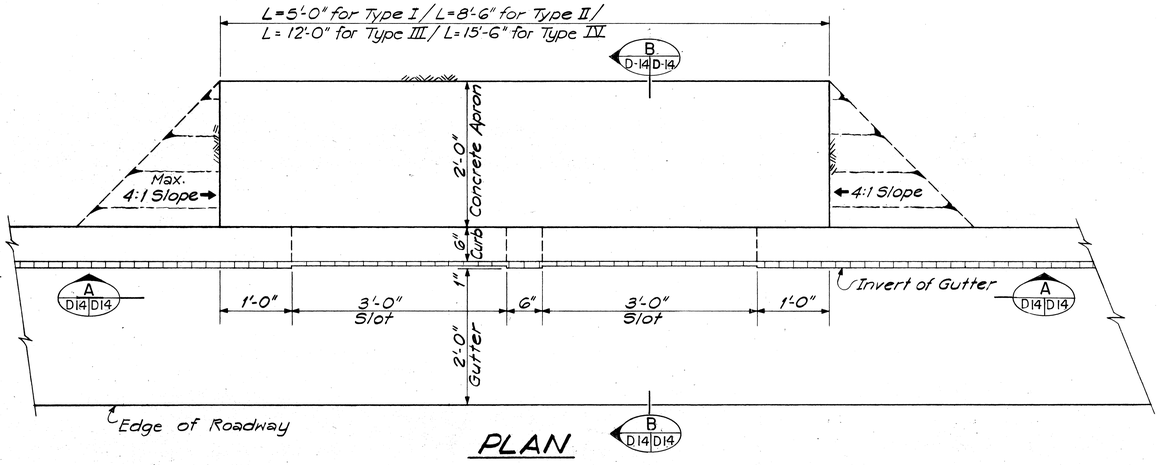

PLAN

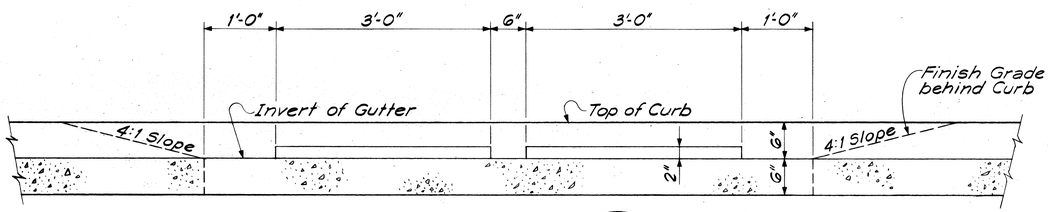

SECTION A D14 D14

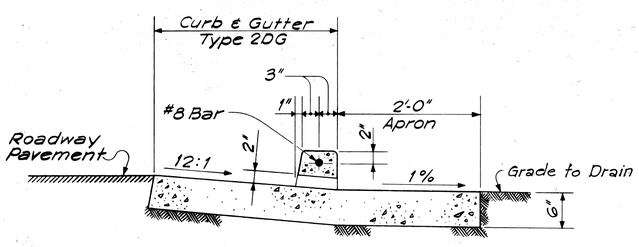

SECTION B D14 D14

CURB SLOT

SCALE: 1"=1'-0"

NOTES:

1. Curb Slot Type II (two slots) is shown. The number of slots for other types are as follows: Type I shall have one slot; Type III shall have 3 slots; and Type IV shall have 4 slots
2. Concrete shall be Class A.
3. #8 Bar shall be continuous over all slots. Embedment at each end shall be 2'-0".
4. Payment for Curb Slot, including apron and #8 bar, will be considered incidental to "Curb & Gutter, Type 2DG".

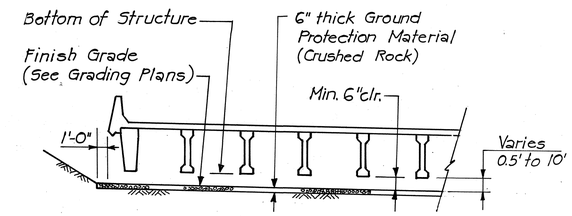

NOTE: Ground Protection Material shall be placed under all Structures with less than 10 feet vertical clearance from finish grade to bottom of Structure.

UNDER BRIDGE STRUCTURES
(Half Section Shown)

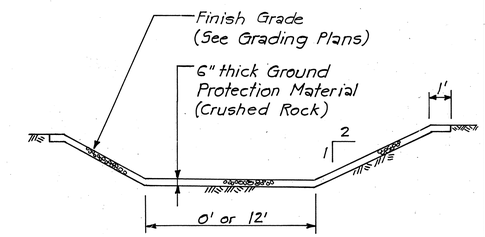

FOR 12' TRAP. DITCH OR VEE DITCH LINING
(As shown on Plans)

GROUND PROTECTION MATERIAL DETAILS

Not to Scale

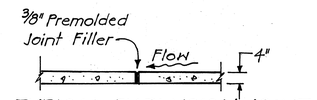

TYPICAL EXPANSION JOINT AT 90' O.C. FOR LINED DITCHES
N.T.S.

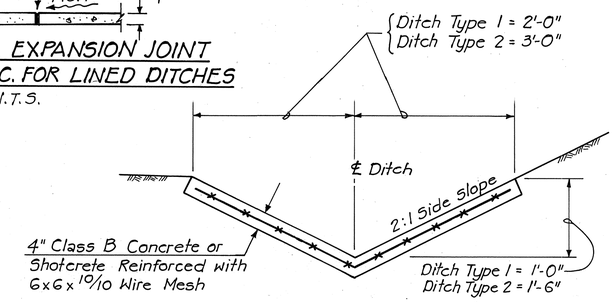

LINED DITCH TYPE 1 & 2
Not to Scale

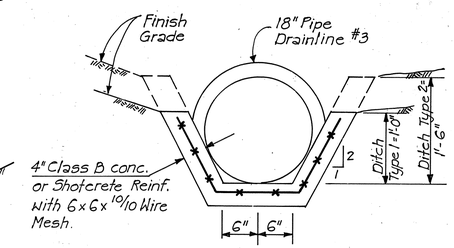

LINED DITCH AT HEADWALL
Not to Scale

NOTES

1. Contractor may substitute Lined Ditches of other shapes with equal or greater capacity if approved by the Engineer. Payment will be in accordance with Ditch detail shown on the Plans.
2. Ditch Transitions shall be paid for under the adjacent Ditch Type.

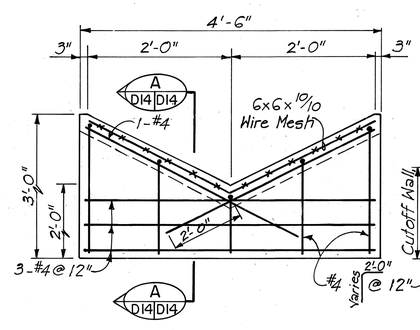

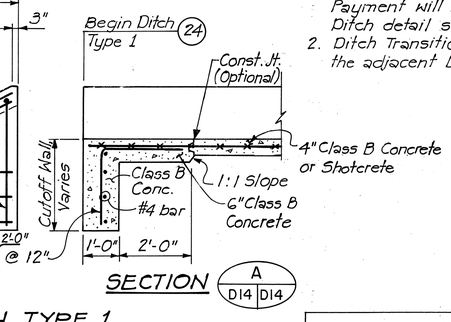

SECTION A D14 D14

CUTOFF WALL FOR DITCH TYPE 1

(AT MAKAI FR. RD. STA. 246+75, 18.5' RT.)
Not to Scale

NOTE:
Cutoff Wall will not be measured & paid for separately but shall be considered incidental to "Lined Drainage Ditch, Type 1".

WERNER BEUGGER
REGISTERED PROFESSIONAL ENGINEER
No. 3383-E
HAWAII, U.S.A.

THIS WORK WAS PREPARED BY ME OR UNDER MY SUPERVISION.

STATE OF HAWAII
DEPARTMENT OF TRANSPORTATION
HIGHWAYS DIVISION

DRAINAGE DETAILS

INTERSTATE ROUTE H-1
PROJECT NO. I-IR-HI-1(169):17

SCALE: As shown DATE: 3/15/83

SHEET No. D-14 OF D-25 SHEETS

ORIGINAL PLAN | SURVEY PLOTTED BY | DRAWN BY | TRACED BY | DESIGNED BY | QUANTITIES BY | CHECKED BY | DATE | NOTE BOOK | No.

FED. ROAD DIST. NO.	STATE	FED. AID PROJ. NO.	FISCAL YEAR	SHEET NO.	TOTAL SHEETS
HAWAII	HAW.	I-IR-HI-1(169)-17	1983	60	280

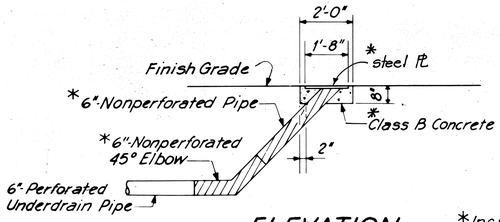

ELEVATION

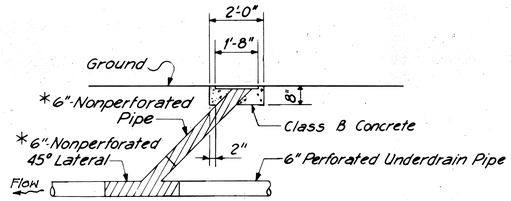

*Incidental to Cleanout

ELEVATION

NOTE: Steel plate cover shall be fastened to the concrete with two 1/4" Flat Head Galvanized Machine Screws in diagonally opposite corners of the plate. Holes in plate are to be countersunk and the anchors in the concrete may be insert-type or metal drilled-in type.

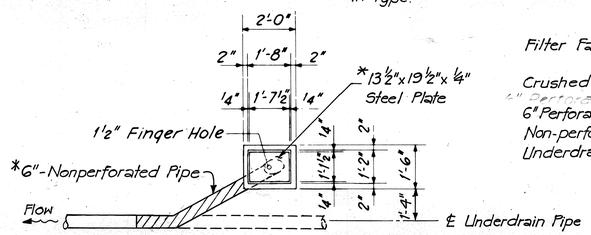

PLAN

UNDERDRAIN CLEANOUT DETAILS

Scale: 3/8" = 1'-0"

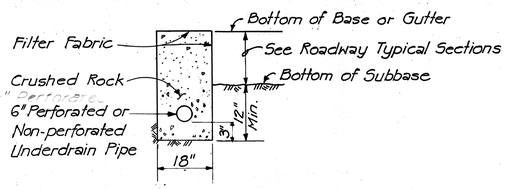

TYPICAL UNDERDRAIN SECTION

Scale: 1/2" = 1'-0"

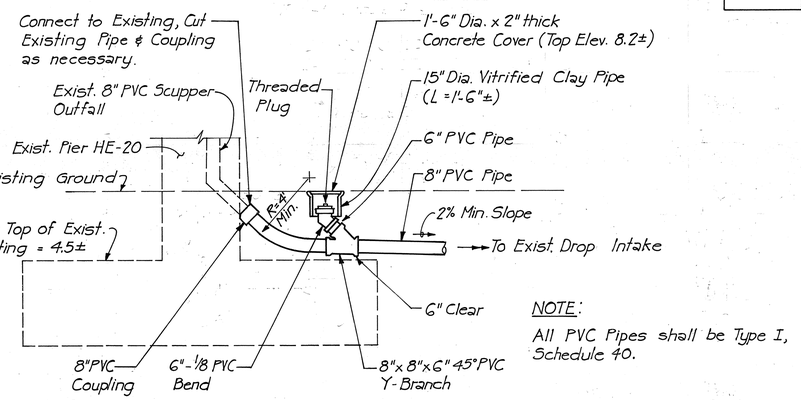

NOTE: All PVC Pipes shall be Type I, Schedule 40.

PIER HE-20 SCUPPER OUTFALL DETAIL

N.T.S.

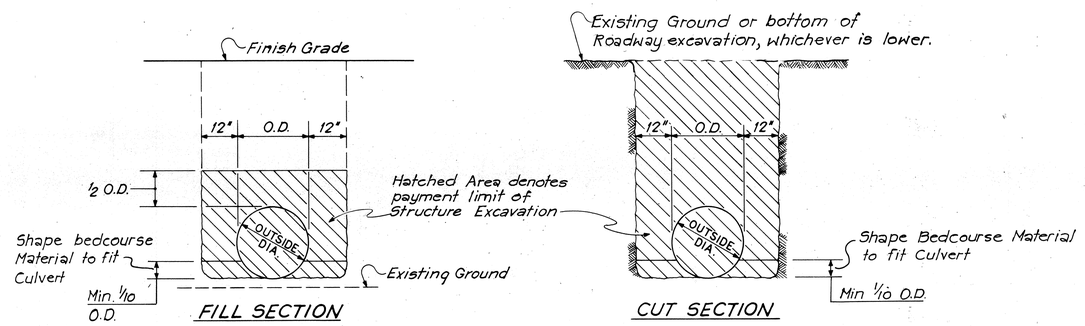

FILL SECTION

CUT SECTION

TRENCH EXCAVATION PAY LIMIT

Not to Scale

(Detail applicable for Drainage Pipes)

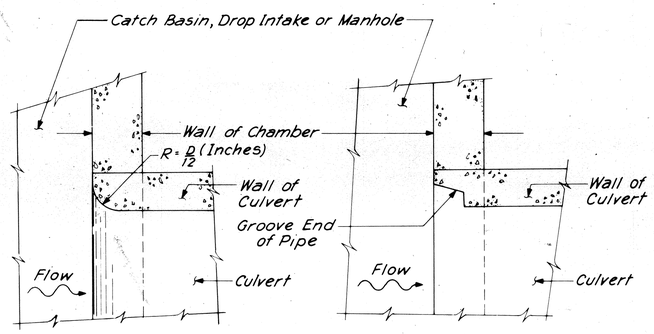

ROUNDED LIP

GROOVE END

PIPE CULVERT ENTRANCE DETAILS

Not to Scale

ORIGINAL PLAN	SURVEY PLOTTED BY
	DRAWN BY
	TRACED BY
NOTE BOOK	DESIGNED BY
	QUANTITIES BY
NO.	CHECKED BY

DATE

WERNER BEUGGERT REGISTERED PROFESSIONAL ENGINEER No. 3383-E HAWAII, U.S.A.

THIS WORK WAS PREPARED BY ME OR UNDER MY SUPERVISION.

STATE OF HAWAII
DEPARTMENT OF TRANSPORTATION
HIGHWAYS DIVISION

DRAINAGE DETAILS

INTERSTATE ROUTE H-1
PROJECT NO. I-IR-HI-1(169):17

SCALE: AS SHOWN DATE: 3/15/82

SHEET No D-15 OF D-25 SHEETS

Contract #

FED. ROAD DIST. NO.	STATE	FED. AID PROJ. NO.	FISCAL YEAR	SHEET NO.	TOTAL SHEETS
HAWAII	HAW.	I-IR-HI-1(169)17	1983	61	280

NOTE: When subgrade is below top of jacket, it shall be fully compacted to this line and then re-excavated (struc. exc.) to proper subgrade. This surface shall be rolled again.

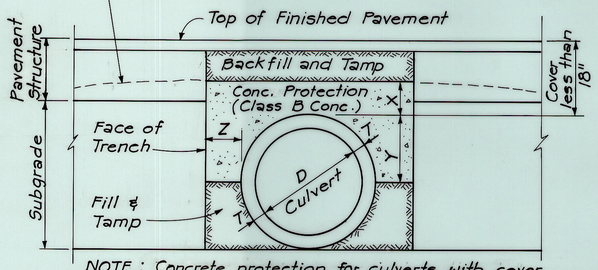

NOTE: Concrete protection for culverts with cover less than 18".

DATA FOR CONCRETE PROTECTION OVER CULVERTS		
X	Y	Z
6" for 18" D	$\frac{D}{2} + T$	Z must be from pipe to face of trench
7" for 24" D		
8" for 30" D		Minimum = X
9" for 36" D		
10" for 42" D		Maximum pay quantity will be Z = 12"
11" for 48" D		
12" for 54" D		
5" for 12" D		

SECTION OF CULVERT WITH CONC. PROTECTION

Scale: 1" = 1'-0"

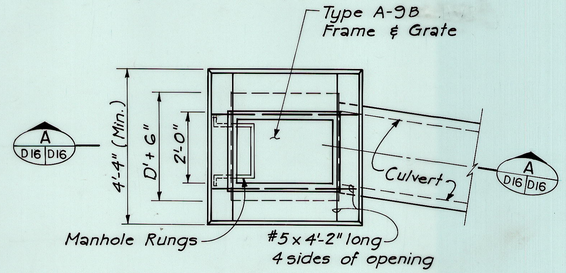

PLAN

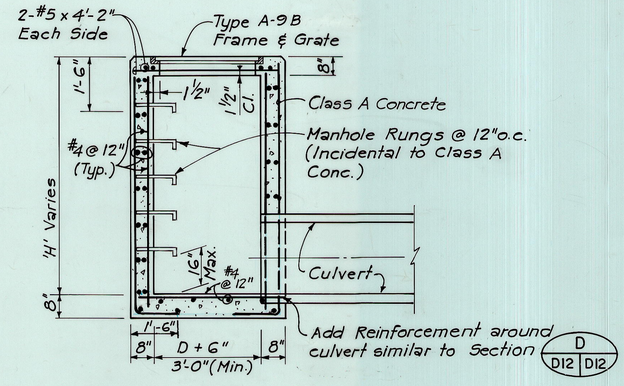

SECTION A D16 D16

TYPE 'C' GRATED CONC. DROP INTAKE

Scale: ½" = 1'-0"

NOTE: For General Notes regarding concrete and reinforcing steel, see Sheet D-6.

IRRIGATION SLEEVES						
SLEEVE	ROADWAY	ROADWAY STATION; OFFSET LOCATIONS; INVERTS		LENGTH	PIPE SIZE	
		BEGIN PIPE	END PIPE			
A	Ramp E	Sta. 18+~~35~~ 65, 7' Lt. Inv. 9.0	Sta. 18+~~35~~ 65, 33' Rt. Inv. 9.0	40'	12"	
B	Ramp D	Sta. 23+65, 33' Lt. Inv. 4.5	Sta. 23+65, 7' Rt. Inv. 4.5	40'	6"	
~~C~~	~~HOV Ramp~~	~~Sta. 36+90, 25' Lt. Inv. 3.0~~	~~Sta. 36+60, 10' Rt. Inv. 3.0~~	~~46'~~	~~6"~~	(Field Change)
D	Makai Fr. Rd.	Sta. 247+30, 32' Lt. Inv. 2.5	Sta. 247+30, 8' Rt. Inv. 2.5	40'	6"	
E	Middle St. (SB)	Sta. 12+70, 60' Lt. Inv. 7.0	Sta. 12+70, 42' Lt. Inv. 7.0	18'	6"	
F	Middle St. (SB)	Sta. 11+52, 72' Lt. Inv. ~~2.0~~ 3.0	Sta. 11+46, 26' Lt. Inv. ~~2.0~~ 3.0	46'	12"	(Field Change)
G	Middle St. (SB)	Sta. 11+45, 7' Lt. Inv. ~~2.0~~ 3.0	Sta. 11+45, 31' Rt. Inv. ~~2.0~~ 3.0	38'	12"	(Field Change)
H	Middle St. (NB)	Sta. 11+20, 20' Lt. Inv. 5.2	Sta. 11+05, 20' Rt. Inv. 4.7	43'	12"	See Note 2
J	Middle St. (NB)	Sta. 10+93, 35' Rt. Inv. 0.3	Sta. 11+20, 65' Rt. Inv. 0.3	40'	12"	
K	Nimitz Conn. (WB)	Sta. 39+75, 95' Lt. Inv. 2.0	Sta. 39+75, 15' Rt. Inv. 2.0	110'	12"	
L	Bikeway 'X'	Sta. ~~27+00~~ 14+05, 13' Lt. Inv. ~~5.0~~ 6.0	Sta. ~~27+00~~ 14+05, 5' Rt. Inv. ~~5.0~~ 6.0	18'	12"	

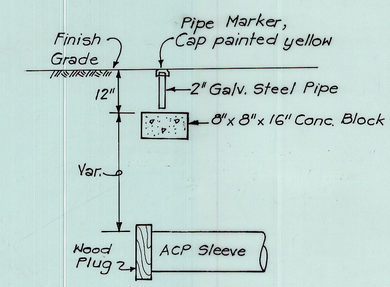

DETAIL - IRRIGATION SLEEVE PIPE MARKER

N.T.S.

NOTES:

1. All Sleeves shall be of ACP Cl. III.
2. Provide Concrete Protection for Irrigation Sleeve (H), see Detail this sheet. Payment will be made under "Concrete Protection for Pipes".
3. Irrigation sleeve pipe markers shall be installed at each end of all sleeves. Payment will be considered incidental to sleeve.

ORIGINAL PLAN		DATE
	SURVEY PLOTTED BY	"
	DRAWN BY	"
	TRACED BY	"
NOTE BOOK	DESIGNED BY	"
	QUANTITIES BY	"
No.	CHECKED BY	"

WERNER BEUGGERT REGISTERED PROFESSIONAL ENGINEER No. 3383-E HAWAII, U.S.A.

THIS WORK WAS PREPARED BY ME OR UNDER MY SUPERVISION.

STATE OF HAWAII
DEPARTMENT OF TRANSPORTATION
HIGHWAYS DIVISION

DRAINAGE DETAILS

INTERSTATE ROUTE H-1
PROJECT NO. I-IR-HI-1(169)17

SCALE: AS SHOWN DATE: 3/15/82

SHEET No. D-16 OF D-25 SHEETS

"AS-BUILT"

FED. ROAD DIST. NO.	STATE	FED. AID PROJ. NO.	FISCAL YEAR	SHEET NO.	TOTAL SHEETS
HAWAII	HAW.	I-IR-HI-1(69)17	1983	62	280

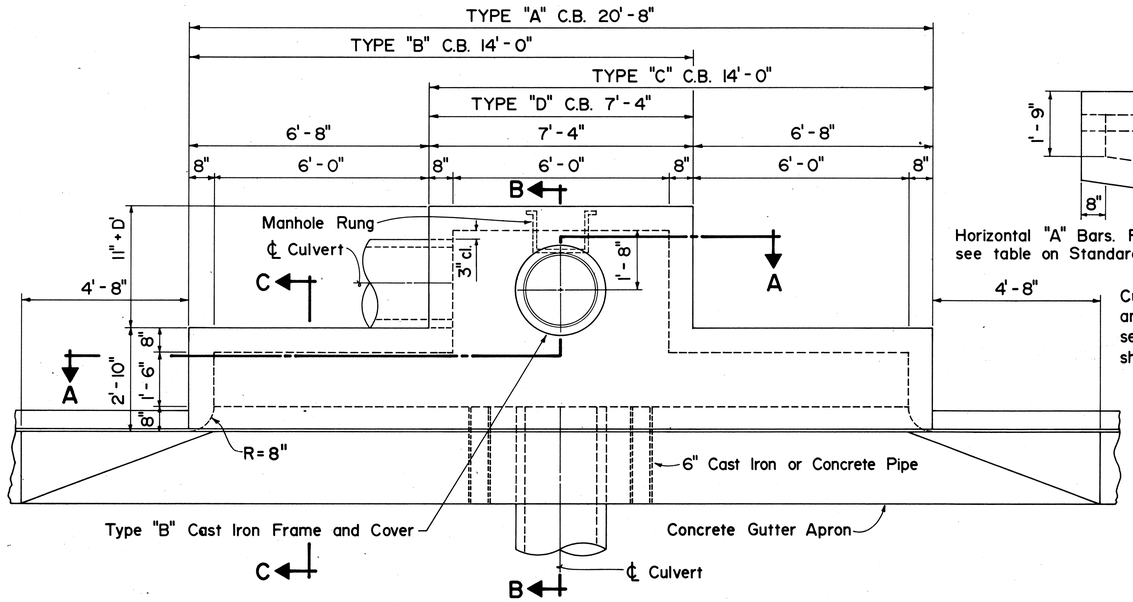

PLAN

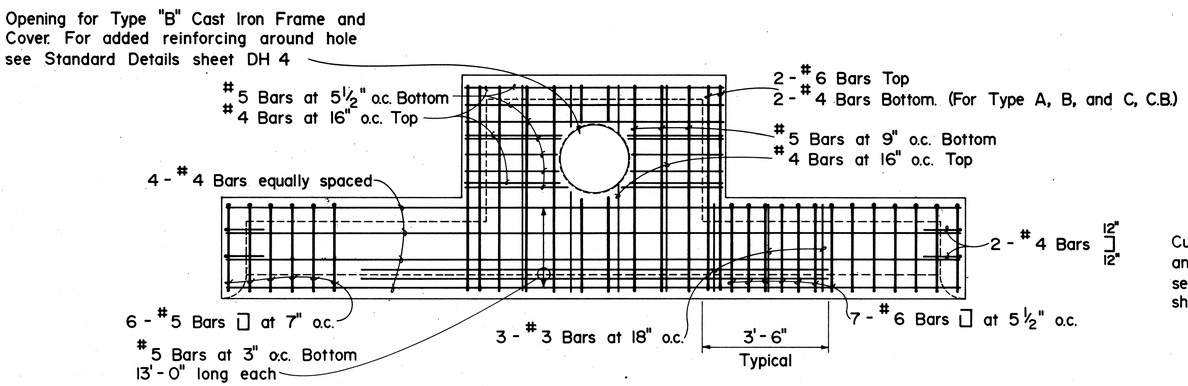

PLAN VIEW OF REINFORCING STEEL

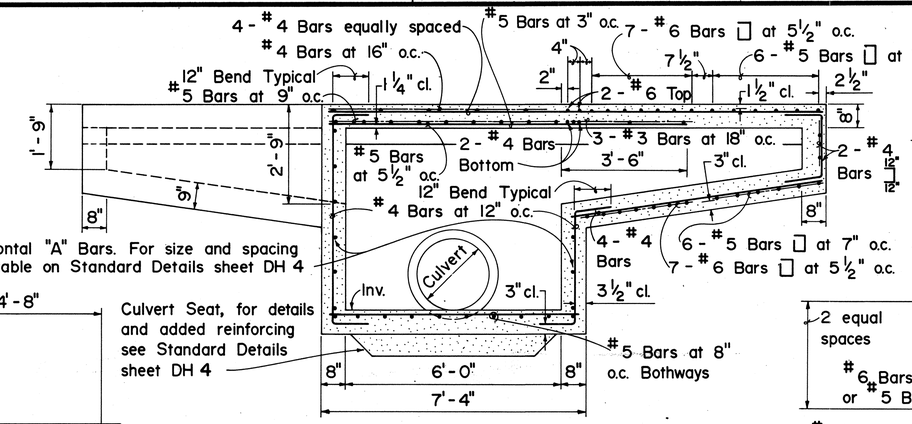

SECTION "A-A"

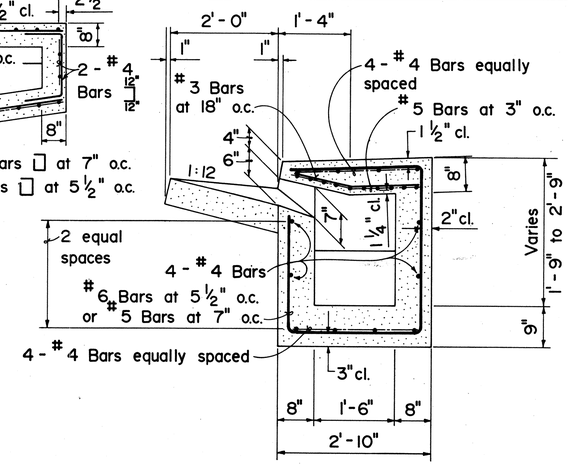

SECTION "C-C"
(2DG Curb and Gutter)

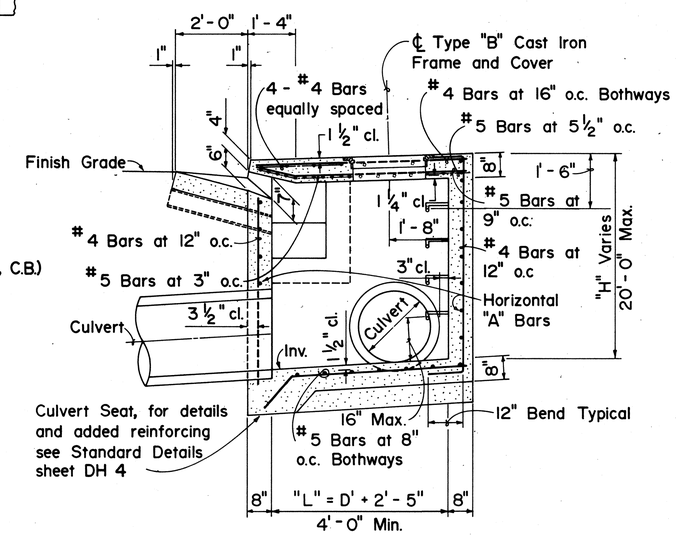

SECTION "B-B"

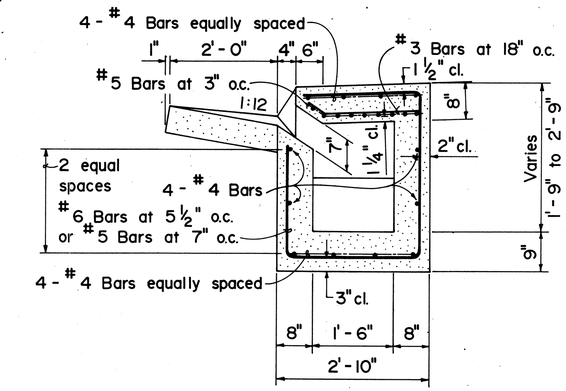

SECTION "C-C"
(2AG Curb and Gutter)

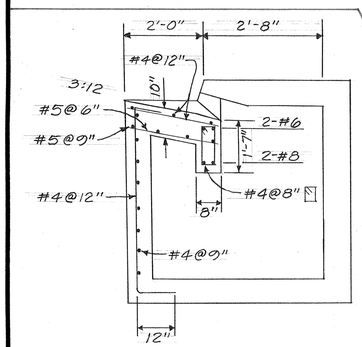

MODIFIED TYPE D CATCH BASIN
Drainage Structures No. 5, 6, & 7
Details Not Shown Same As
For Type D Catch Basin
(Field Change)

Note: This detail prepared during "As-Built" posting.

TYPE "A", "B", "C" & "D" CATCH BASIN

APPROVAL RECOMMENDED:
HYDRAULIC DESIGN ENGINEER — DATE 12/3/80

APPROVED:
ASSISTANT CHIEF, ENGINEERING — DATE 12/4/80

NO.	REVISION	APPROVED BY	DATE
1.	Supersedes Sht. DH 1 approved 12/17/69	HH.	12/4/80
2.	Define "L" - Section "B-B", change bottom slab spacing 9" to 8" in Section "B-B"	NJ	3-10-84

STATE OF HAWAII
DEPARTMENT OF TRANSPORTATION
HIGHWAYS DIVISION

STANDARD DETAILS

TYPE A, B, C, & D CATCH BASIN

Not To Scale — Date: Dec. 1980

SHEET No. D-17 OF D-25 SHEETS DH 1

ORIGINAL PLAN	SURVEY PLOTTED BY	DATE
	DRAWN BY	"
	TRACED BY	"
NOTE BOOK	DESIGNED BY	"
No.	QUANTITIES BY	"
	CHECKED BY	"

FED. ROAD DIST. NO.	STATE	FED. AID PROJ. NO.	FISCAL YEAR	SHEET NO.	TOTAL SHEETS
HAWAII	HAW.	FIR-HI-(164)17	1983	63	280

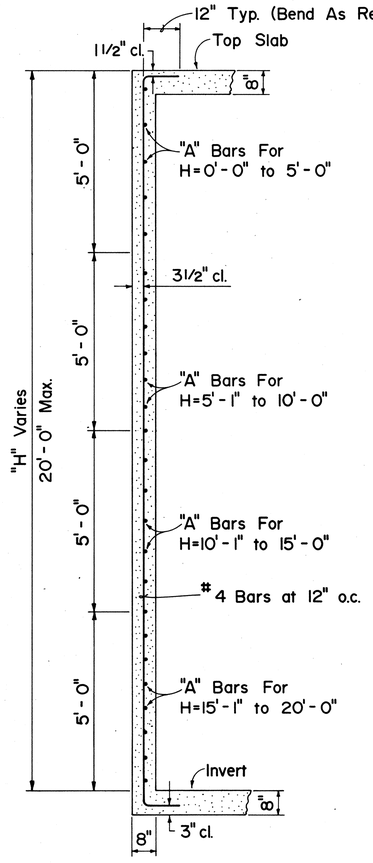

ELEVATION VIEW OF WALL SECTION

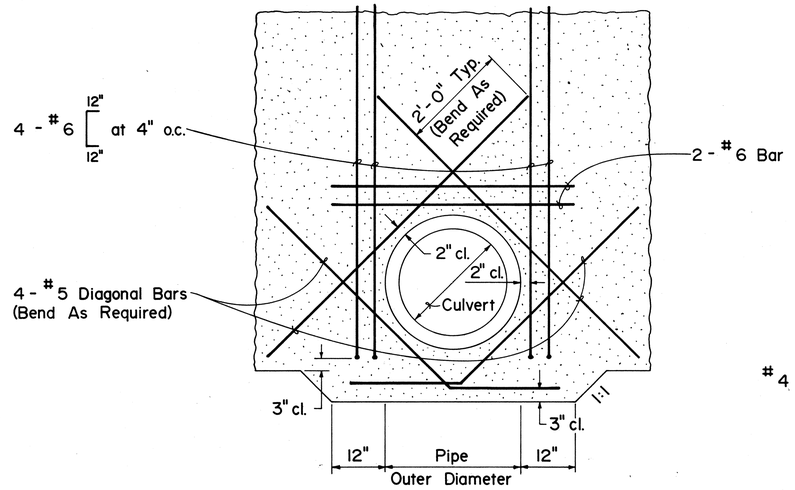

ADDED REINFORCING FOR CULVERT OPENINGS

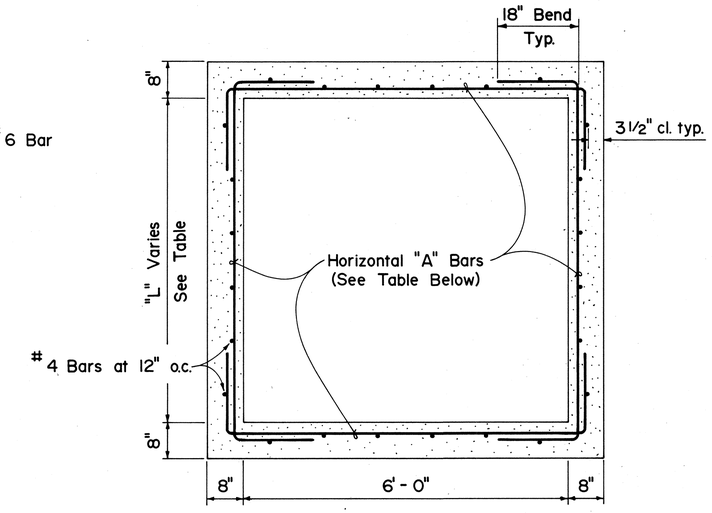

PLAN VIEW OF WALL SECTION

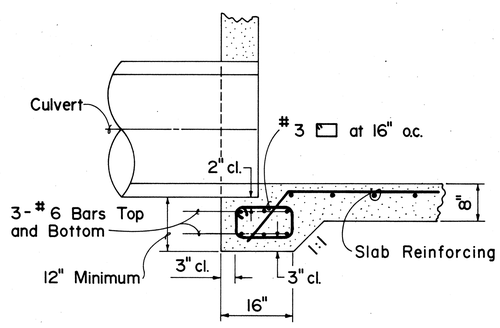

DETAIL OF CULVERT SEAT

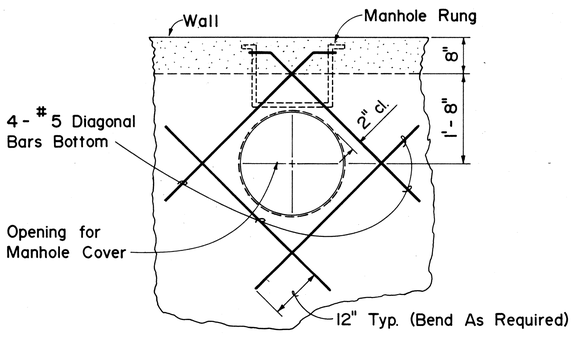

ADDED REINFORCING FOR MANHOLE OPENING

HORIZONTAL "A" BARS

"H" MAX. (FT.)	"L" MAX. (FT.) 4'-0"	6'-0"	7'-4"	8'-4"	9'-4"
0'-0" to 5'-0"	#4 at 12" o.c.	#4 at 10" o.c.	#5 at 10" o.c.	#5 at 8" o.c.	#5 at 7" o.c.
5'-1" to 10'-0"	#4 at 9" o.c.	#5 at 9" o.c.	#5 at 6" o.c.	N.A.	N.A.
10'-1" to 15'-0"	#5 at 10" o.c.	#5 at 6" o.c.	N.A.	N.A.	N.A.
15'-1" to 20'-0"	#5 at 8" o.c.	N.A.	N.A.	N.A.	N.A.

APPROVAL RECOMMENDED:
HYDRAULIC DESIGN ENGINEER — DATE 12/3/80

APPROVED:
ASSISTANT CHIEF, ENGINEERING — DATE 12/4/80

NO.	REVISION	APPROVED BY	DATE
1.	Replaces Sht. DH 4 approved 12-17-69	HT.	12/4/80
2.	Delete bar clearance in Culvert Seat Detail, "slab reinforcing" in lieu of bar size and clearance in Culvert Seat Detail	SJO	3-10-84

STATE OF HAWAII
DEPARTMENT OF TRANSPORTATION
HIGHWAYS DIVISION

STANDARD DETAILS

TYPICAL REINFORCING DETAILS FOR CATCH BASINS

Not To Scale — Date: Dec. 1980

SHEET No. D-18 OF D-25 SHEETS DH 4

ORIGINAL PLAN	SURVEY PLOTTED BY	DRAWN BY	TRACED BY	DESIGNED BY	QUANTITIES BY	CHECKED BY	DATE
NOTE BOOK No.							

FED. ROAD DIST. NO.	STATE	FED. AID PROJ. NO.	FISCAL YEAR	SHEET NO.	TOTAL SHEETS
HAWAII	HAW.	I-IR-H1-1(69)17	1983	64	280

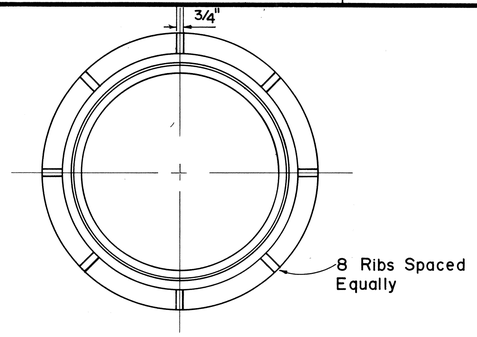

PLAN OF FRAME

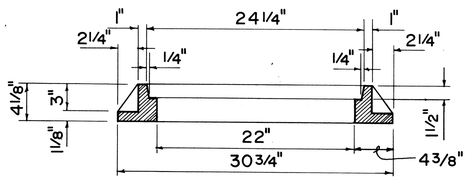

SECTION OF FRAME

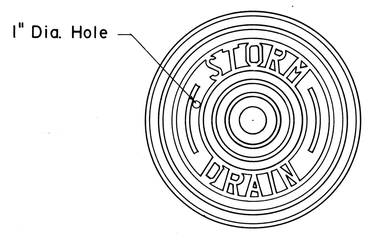

TOP VIEW OF COVER

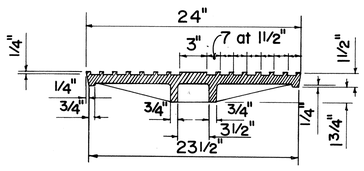

SECTION

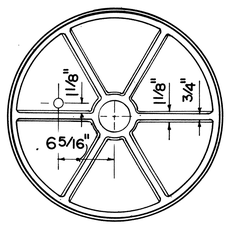

BOTTOM VIEW OF COVER

TYPE "P" CAST IRON FRAME AND COVER

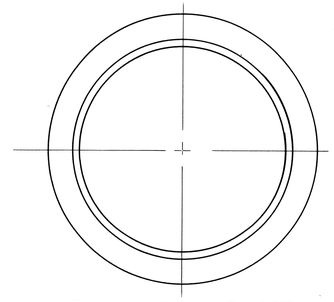

PLAN OF FRAME

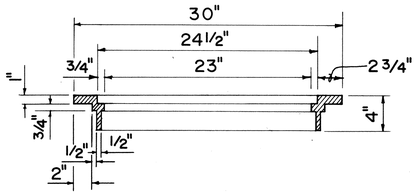

SECTION OF FRAME

TOP VIEW OF COVER

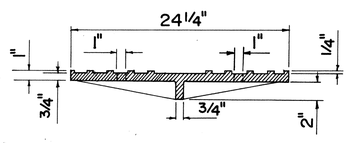

SECTION

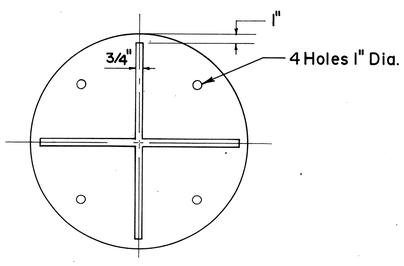

BOTTOM VIEW OF COVER

TYPE "B" CAST IRON FRAME AND COVER

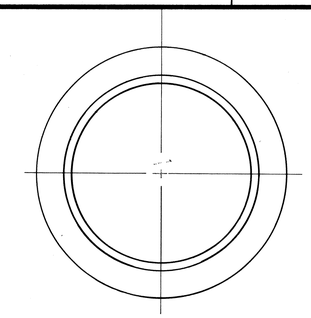

PLAN OF FRAME

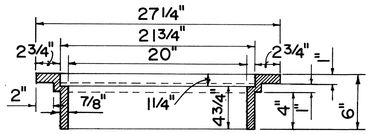

SECTION OF FRAME

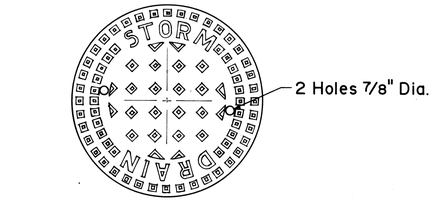

TOP VIEW OF COVER

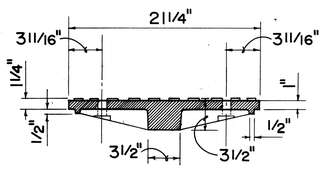

SECTION

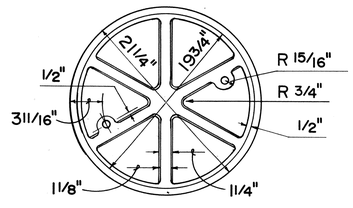

BOTTOM VIEW OF COVER

TYPE "A" CAST IRON FRAME AND COVER

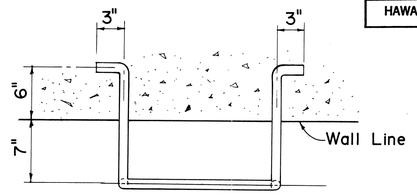

PLAN

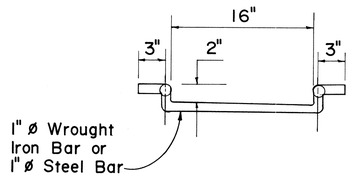

FRONT VIEW

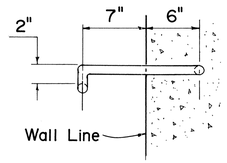

SIDE VIEW

MANHOLE RUNG

APPROVAL RECOMMENDED:
G. Takano — HYDRAULIC DESIGN ENGINEER — 6-19-79 DATE

APPROVED:
Herbert Takeishi — ASSISTANT CHIEF, ENGINEERING — 6-22-79 DATE

NO.	REVISION	APPROVED BY	DATE
1.	Supersedes Sht. DH 6 approved 12-17-69	H.T.	6/22/79

STATE OF HAWAII
DEPARTMENT OF TRANSPORTATION
HIGHWAYS DIVISION

STANDARD DETAILS

CATCH BASIN AND MANHOLE CASTINGS

Not To Scale — Date: Dec. 1977

SHEET No. D-19 OF D-25 SHEETS DH 6

ORIGINAL PLAN		DATE
	SURVEY PLOTTED BY	
	DRAWN BY	
	TRACED BY	
NOTE BOOK	DESIGNED BY	
	QUANTITIES BY	
No.	CHECKED BY	

FED. ROAD DIST. NO.	STATE	FED. AID PROJ. NO.	FISCAL YEAR	SHEET NO.	TOTAL SHEETS
HAWAII	HAW.	I-IR-H-1(64)17	1983	65	280

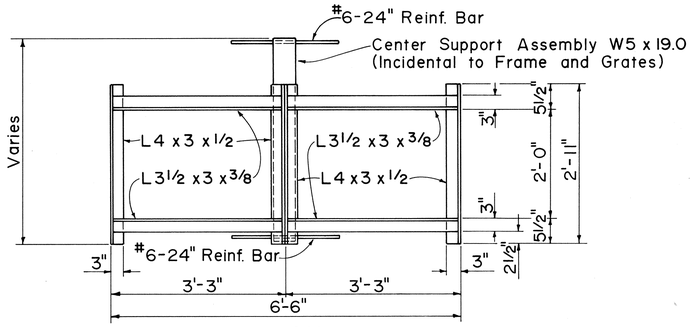

PLAN
(Two or More Grates)

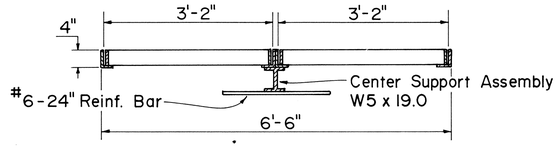

LONGITUDINAL SECTION
(Thru Frame & Grate)

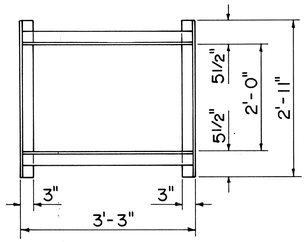

PLAN
(Single Grate)

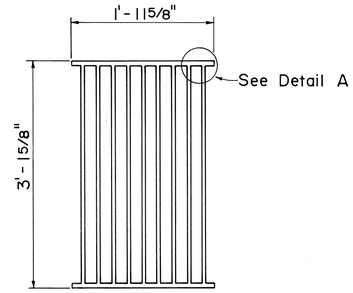

PLAN

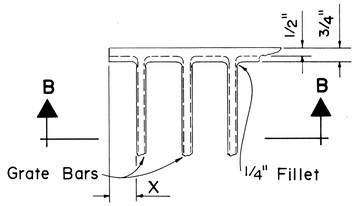

DETAIL A

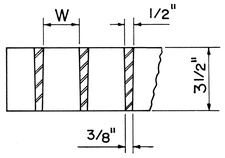

SECTION B-B

ALTERNATIVE CAST MALLEABLE IRON OR CAST STEEL GRATE

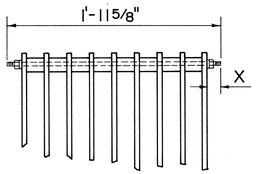

BOLTED END BLOCK

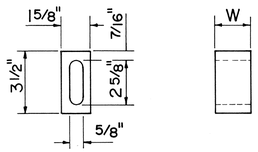

BAR SPACER

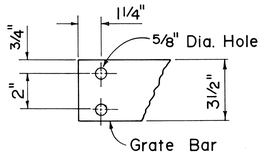

END OF BAR

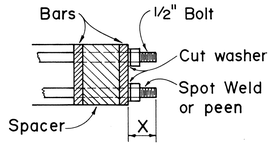

BOLTING DETAIL

ALTERNATIVE BOLTED GRATE

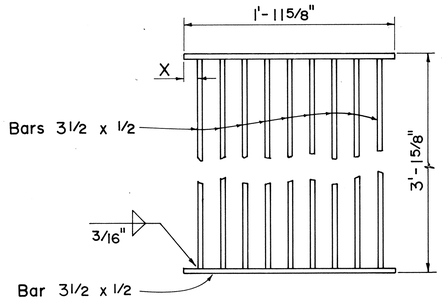

PLAN

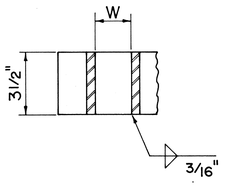

SECTION

ALTERNATIVE WELDED GRATE

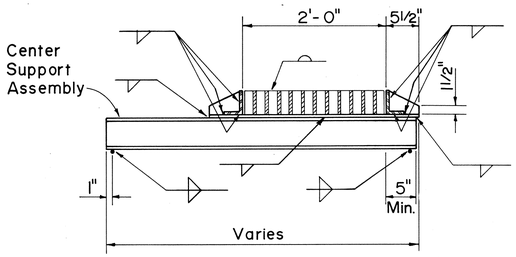

CROSS SECTION
(Thru Frame & Grate)

FRAME DETAILS

GENERAL NOTES

1. Contractor has the option of using cast malleable iron, cast steel, welded, or bolted grate.
2. All welds 3/8" unless otherwise noted.
3. Type A-9 – Use in locations off the roadbed on all types of highways.
4. Type A-12 – Use within the roadbed on all types of highways.

GRATE BAR SPACING TABLE			
TYPE	NO. BARS	CLEAR BAR SPACING-W	X
A-9	9	2"	1 9/16"
A-12	12	1 3/8"	1 1/4"

APPROVAL RECOMMENDED:
T. Yakano — 6-19-79
HYDRAULIC DESIGN ENGINEER — DATE

APPROVED:
Herbert Takeishi — 6-22-79
ASSISTANT CHIEF, ENGINEERING — DATE

NO.	REVISION	APPROVED BY	DATE
1.	Supersedes Sht. DH 7 approved 12-17-69	H.T.	6/22/79
2.	Revise standard nomenclature for rolled steel shapes.	H.T.	4/27/82

STATE OF HAWAII
DEPARTMENT OF TRANSPORTATION
HIGHWAYS DIVISION

STANDARD DETAILS

TYPE A-9 AND A-12
FRAMES AND GRATES

Not To Scale — Date: Dec. 1977

SHEET No. D-20 OF D-25 SHEETS DH 7

ORIGINAL PLAN — SURVEY PLOTTED BY — DRAWN BY — TRACED BY — DESIGNED BY — QUANTITIES BY — CHECKED BY — NOTE BOOK No. — DATE

FED. ROAD DIST. NO.	STATE	FED. AID PROJ. NO.	FISCAL YEAR	SHEET NO.	TOTAL SHEETS
HAWAII	HAW.	I-IR-H1-1(169):17	1983	66	280

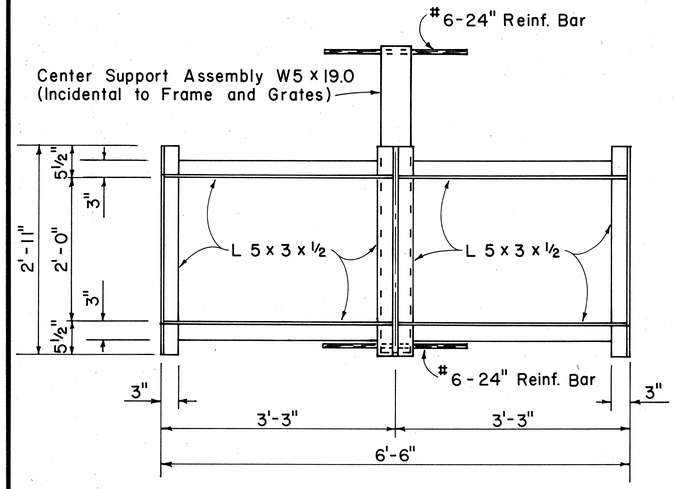

PLAN
(Two or More Grates)

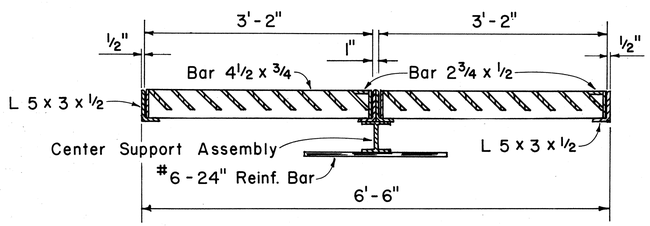

LONGITUDINAL SECTION
(Thru Frame & Grate)

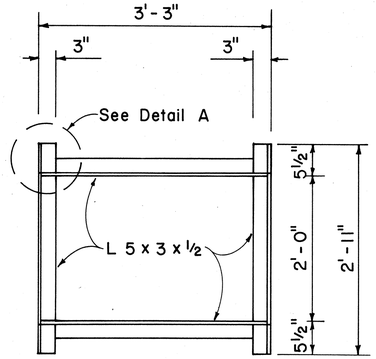

PLAN
(Single Grate)

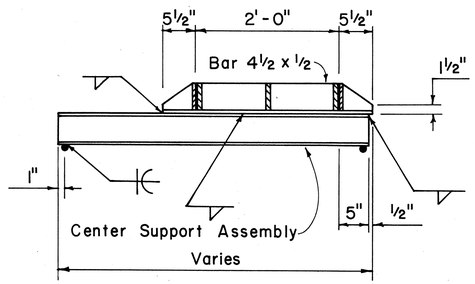

CROSS SECTION
(Thru Frame & Grate)

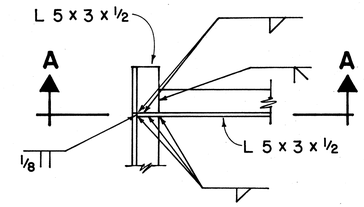

DETAIL A

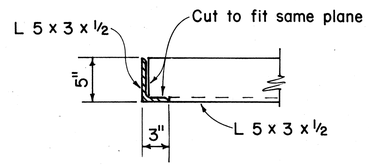

SECTION A-A

FRAME DETAILS

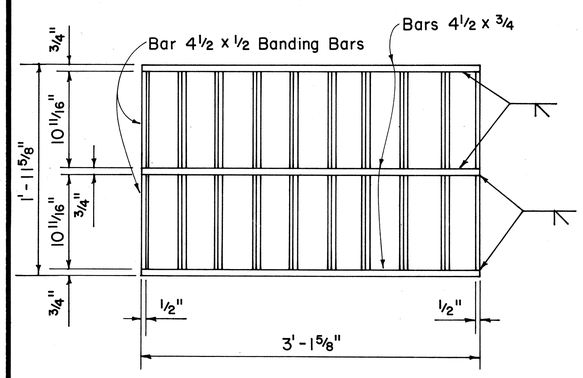

PLAN

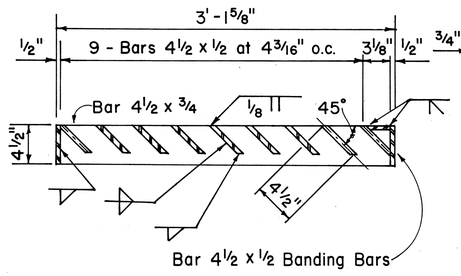

LONGITUDINAL SECTION

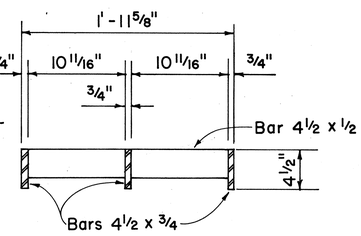

CROSS SECTION

GRATE DETAILS

GENERAL NOTES

1. All welds 5/16" unless otherwise noted.
2. Grates and Frames shall be hot dip galvanized after fabrication.
3. Center Support Assembly shall be used when two or more grates are specified. Incidental to Steel Frame and Grates.
4. Use in locations off the road bed on all types of highway. (Bicycle Grates)

APPROVAL RECOMMENDED:
HYDRAULIC DESIGN ENGINEER — DATE 2/4/83

APPROVED:
ASSISTANT CHIEF, ENGINEERING — DATE 2-4-83

NO.	REVISION	APPROVED BY	DATE

STATE OF HAWAII
DEPARTMENT OF TRANSPORTATION
HIGHWAYS DIVISION

STANDARD DETAILS

TYPE A-9B
FRAMES AND GRATES

Not To Scale — Date: Feb. 1983

SHEET No. D-20A OF D-25 SHEETS DH 7A

ORIGINAL PLAN	SURVEY PLOTTED BY	DATE
	DRAWN BY	"
	TRACED BY	"
NOTE BOOK	DESIGNED BY	"
	QUANTITIES BY	"
No.	CHECKED BY	"

FED. ROAD DIST. NO.	STATE	FED. AID PROJ. NO.	FISCAL YEAR	SHEET NO.	TOTAL SHEETS
HAWAII	HAW.	I-IR-HI-1(169):17	1983	67	280

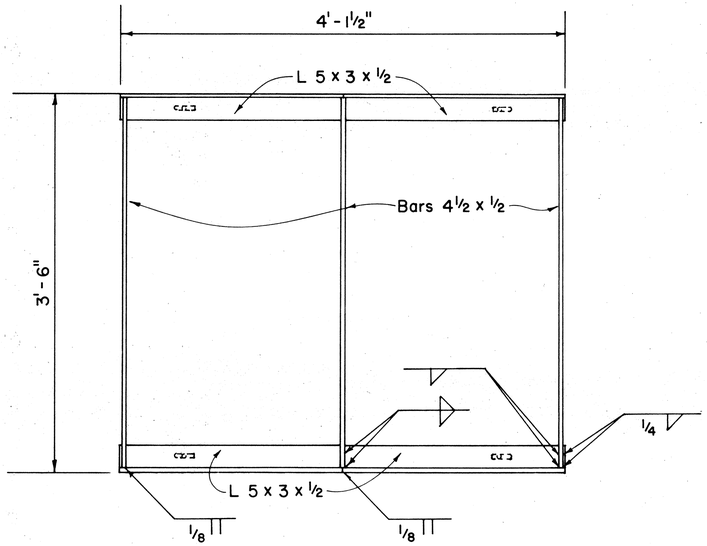

PLAN - FRAME

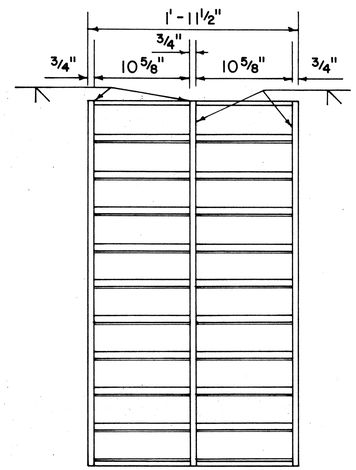

PLAN - GRATE

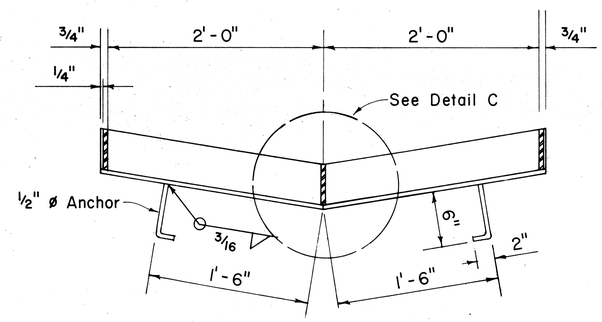

CROSS SECTION

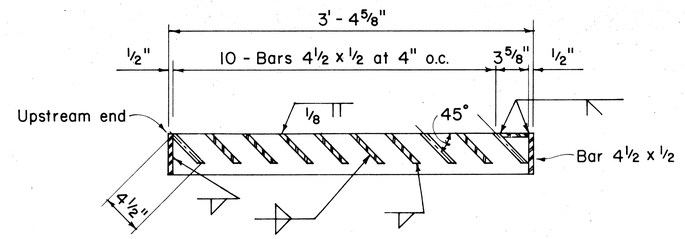

LONGITUDINAL SECTION

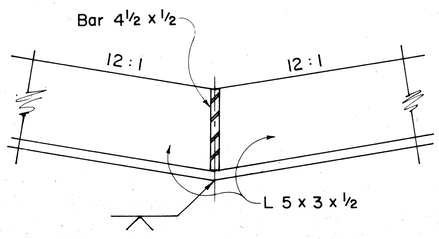

DETAIL C

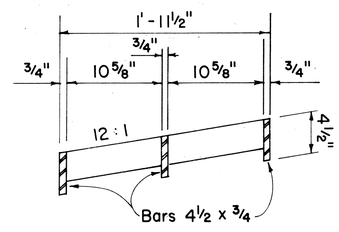

CROSS SECTION

GENERAL NOTES

1. All welds 5/16" unless otherwise noted.
2. Grates and Frames shall be hot dip galvanized after fabrication.
3. Use in locations off the road bed on all types of highway. (Bicycle Grates)

TYPE 1214 FRAME AND GRATES

ORIGINAL PLAN		
	SURVEY PLOTTED BY	DATE
	DRAWN BY	"
	TRACED BY	"
NOTE BOOK	DESIGNED BY	"
No.	QUANTITIES BY	"
	CHECKED BY	"

WERNER BEUGOST REGISTERED PROFESSIONAL ENGINEER No. 3383-E HAWAII, U.S.A.

THIS WORK WAS PREPARED BY ME OR UNDER MY SUPERVISION.

NO.	REVISION	APPROVED BY	DATE

STATE OF HAWAII
DEPARTMENT OF TRANSPORTATION
HIGHWAYS DIVISION

TYPE 1214

STEEL FRAME AND GRATES

Not To Scale Date: Feb. 1983

SHEET No. D-208 OF D-25 SHEETS DH 8B

FED. ROAD DIST. NO.	STATE	FED. AID PROJ. NO.	FISCAL YEAR	SHEET NO.	TOTAL SHEETS
HAWAII	HAW.	I-IR-H-1(169)-17	1983	68	280

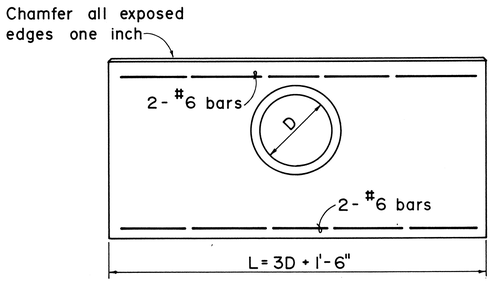

ELEVATION

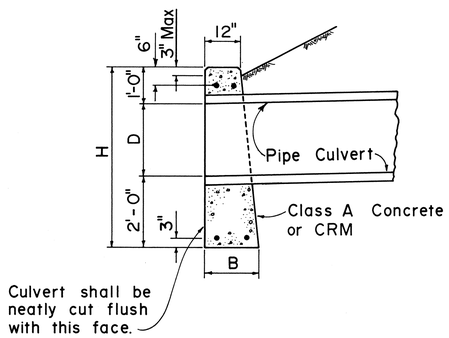

SECTION

DATA FOR CONC. HDWL.			
D	B	L	H
18"	1'-6"	6'-0"	4'-6"
24"	1'-6"	7'-6"	5'-0"
30"	2'-0"	9'-0"	5'-6"
36"	2'-0"	10'-6"	6'-0"
42"	2'-6"	12'-0"	6'-6"
48"	2'-6"	13'-6"	7'-0"

DATA FOR CRM HDWL.			
D	B	L	H
18"	1'-9"	6'-0"	4'-6"
24"	2'-0"	7'-6"	5'-0"
30"	2'-3"	9'-0"	5'-6"
36"	2'-6"	10'-6"	6'-0"

CONCRETE OR CRM HEADWALL

ORIGINAL PLAN
SURVEY PLOTTED BY ____ DATE ____
DRAWN BY "
TRACED BY "
NOTE BOOK DESIGNED BY "
QUANTITIES BY "
No. CHECKED BY "

APPROVAL RECOMMENDED:
T. Takamo 6-19-79
HYDRAULIC DESIGN ENGINEER DATE

APPROVED:
Hubert Sakaishi 6-22-79
ASSISTANT CHIEF, ENGINEERING DATE

NO.	REVISION	APPROVED BY	DATE
1.	Supersedes Sht. DH 10 approved 12-17-69	H.T.	6/22/79
2.	Change Class of concrete	H.T.	12/4/80

STATE OF HAWAII
DEPARTMENT OF TRANSPORTATION
HIGHWAYS DIVISION

STANDARD DETAILS

CONCRETE OR CEMENT RUBBLE MASONRY HEADWALLS

Not To Scale Date: June 1979

SHEET No. D-21 OF D-25 SHEETS DH 10

FED. ROAD DIST. NO.	STATE	FED. AID PROJ. NO.	FISCAL YEAR	SHEET NO.	TOTAL SHEETS
HAWAII	HAW.	I-IR-H1-1(69)-17	1983	69	280

DRAINAGE SUMMARY

STRUCTURES			CULVERTS		ESTIMATED QUANTITIES																																		
DRAINAGE SHEET	STRUCTURE NUMBER	TYPE	FROM STRUCTURE NO.	TO STRUCTURE NO.	ITEM NO.			206								603			603	603	603			604	604	604	604	604	604	640	640									
								.2020								.0010			.5020	.5040	.5060			.6320	.6330	.6340	.6350	.6700	.6800	.8000	.8100									
					DRAINLINE NO.			STRUCTURE EXCAVATION FOR DRAINAGE SYSTEM								BED COURSE MATERIAL FOR CULVERT			18-INCH ACP, CL. III 18-INCH RCP, CL. III	24-INCH ACP, CL. III 24-INCH RCP, CL. III	36-INCH ACP, CL. III 36-INCH RCP, CL. III			TYPE B CATCH BASIN, 4.00 FEET TO 4.99 FEET	TYPE B CATCH BASIN, 5.00 FEET TO 5.99 FEET	TYPE D CATCH BASIN 4.00 FEET TO 4.99 FEET	TYPE D CATCH BASIN 5.00 FEET TO 5.99 FEET	HEADWALLS FOR PIPE CULVERTS	CONCRETE PROTECTION FOR PIPES	LINED DITCH, TYPE 1	LINED DITCH, TYPE 2									
					UNIT			C.Y.								C.Y.			L.F.	L.F.	L.F.			EA.	EA.	EA.	EA.	L.S.	L.S.	L.S.	L.S.									
D1	24	BEGIN DITCH TYPE 1			—																																		
D1/D2		DITCH TYPE 1	24	24A	—																									(207 L.F.)									
D2	24A	HEADWALL			3																							(L.S.)											
		18" PIPE	24A	25	3			37.7								1.8			90										(L.S.)										
	25	HEADWALL			3																							(L.S.)											
		DITCH TYPE 2	25	25A	—																										(272 L.F.)								
D2	25A	DITCH TYPE 2 OUTFALL			—																																		
D1	22	HEADWALL			4																							(L.S.)											
D1/D2		36" PIPE	22	23	4			94.7								5.9					98																		
D2	23	HEADWALL			4																							(L.S.)											
D2	15	CB TYPE D			5																					1													
		24" PIPE	15	14				20.2								1.3				37																			
	14	CB TYPE D																								1													
		24" PIPE	14	13				15.5								0.9				26																			
	13	CB TYPE B																						1															
		24" PIPE	13	12				32.7								2.1				62																			
	12	CB TYPE B																							1														
		24" PIPE	12	11				15.8								1.1				31																			
	11	CB TYPE D																									1												
		24" PIPE	11	11A				111.1								5.6				163																			
D2	11A	PIPE OUTFALL			5																																		
		SUBTOTAL THIS SHEET						327.7								18.7			90	319	98			1	1	2	1	L.S.	L.S.	L.S.	L.S.									

SHEET No. D-22 OF D-25 SHEETS

ORIGINAL PLAN	SURVEY PLOTTED BY	DATE
	DRAWN BY	"
	TRACED BY	"
NOTE BOOK	DESIGNED BY	"
No.	QUANTITIES BY	"
	CHECKED BY	"

FED. ROAD DIST. NO.	STATE	FED. AID PROJ. NO.	FISCAL YEAR	SHEET NO.	TOTAL SHEETS
HAWAII	HAW.	I-IR-H1-1(169)-17	1983	70	280

DRAINAGE SUMMARY

STRUCTURES			CULVERTS		ESTIMATED QUANTITIES																																			
DRAINAGE SHEET	STRUCTURE NUMBER	TYPE	FROM STRUCTURE NO.	TO STRUCTURE NO.	ITEM NO.			206								603				603	603	603	603				604	604	604	604	604	604	604				604	604				
								.2020								.0010				.5020	.5040	.5050	.5060				.6110	.6200	.6230	.6300	.6310	.6350	.6400				.6600	.6800				
					DRAINLINE NO.			STRUCTURE EXCAVATION FOR DRAINAGE SYSTEM								BED COURSE MATERIAL FOR CULVERT				18-INCH ACP, CL. III 18-INCH RCP, CL. III	24-INCH ACP, CL. III 24-INCH RCP, CL. III	30-INCH ACP, CL. III 30-INCH RCP, CL. III	36-INCH ACP, CL. III 36-INCH RCP, CL. III				TYPE 'T' MANHOLE	TYPE 'C' DROP INTAKE	TYPE 'R' DROP INTAKE	TYPE 'A' CATCH BASIN 2.00 FEET TO 2.99 FEET	TYPE 'A' CATCH BASIN 4.00 FEET TO 4.99 FEET	TYPE 'D' CATCH BASIN 5.00 FEET TO 5.99 FEET	TYPE 'F' CATCH BASIN				DRAINLINE #8 BOX CULVERT	CONCRETE PROTECTION FOR PIPES				
					UNIT			C.Y.								C.Y.				L.F.	L.F.	L.F.	L.F.				EA.	EA.	EA.	EA.	EA.	EA.	EA.				L.S.	L.S.				
D2	18	DI TYPE C			7																							1														
		24" PIPE	18	20	7			31.5								2.5					74																					
	20	CB TYPE F			7																																					
	16	DI TYPE R			8																								1													
		2-18" PIPES	16	17				3.0								0.3				16																						
	17	CB TYPE A																												1												
		DRAINLINE #8 BOX CULVERT	17	19																																	L.S.					
	19	BOX CULVERT HEADWALL																																								
		2-30" PIPES	19	19A				64.0								5.8						144																	35 C.Y.				
	19A	MH TYPE T																									1															
		2-36" PIPES	19A	20				165.6								10.9							202																			
	20	CB TYPE F																															1									
		2-36" PIPES	20	20A				126.3								8.3							154																			
	20A	PIPE OUTFALL			8																																					
	7	CB TYPE D			9																											1										
		24" PIPE	7	6				46.9								2.8					81																					
	6	CB TYPE D																														1										
		24" PIPE	6	5				73.7								3.5					103																					
	5	CB TYPE D																														1										
		24" PIPE	5	5A				36.8								1.6					48																					
	5A	PIPE OUTFALL			9																																					
	21	CB TYPE A			11																										1											
		24" PIPE	21	21A	11			22.7								1.2					36																					
D2	21A	PIPE OUTFALL			11																																					
		SUB TOTAL THIS SHEET						570.5								36.9				16	342	144	356				1	1	1	1	1	3	1				L.S.	L.S.				

SHEET No. D-23 OF D-25 SHEETS

70

ORIGINAL PLAN
NOTE BOOK No.

SURVEY PLOTTED BY
DRAWN BY
TRACED BY
DESIGNED BY
QUANTITIES BY
CHECKED BY

DATE
" " "
" " "

FED. ROAD DIST. NO.	STATE	FED. AID PROJ. NO.	FISCAL YEAR	SHEET NO.	TOTAL SHEETS
HAWAII	HAW.	HR-HI(69):17	1983	71	280

DRAINAGE SUMMARY

STRUCTURES			CULVERTS		ESTIMATED QUANTITIES																																		
					ITEM NO.		206					206			603					603	603									603	603	603				604	604	604	604	604	604	604
							.2020					.8000			.0010					.5020	.5040									.5050	.5060	.9000				.6100	.6110	.6200	.6210	.6220	.6230	.6240
DRAINAGE SHEET	STRUCTURE NUMBER	TYPE	FROM STRUCTURE NO.	TO STRUCTURE NO.	DRAINLINE NO.		STRUCTURE EXCAVATION FOR DRAINAGE SYSTEM					FILTER MATERIAL			BED COURSE MATERIAL FOR CULVERT					18-INCH ACP, CL. III 18-INCH RCP, CL. III	24-INCH ACP, CL. III 24-INCH RCP, CL. III									30-INCH ACP, CL. III 30-INCH RCP, CL. III	36-INCH ACP, CL. III 36-INCH RCP, CL. III	PIER HE-20 SCUPPER OUTFALL				TYPE "IA" MANHOLE	TYPE "T" MANHOLE	TYPE "C" DROP INTAKE	TYPE "K" DROP INTAKE	TYPE "K-1" DROP INTAKE	TYPE "R" DROP INTAKE	TYPE "S" DROP INTAKE
					UNIT		C.Y.					C.Y.			C.Y.					L.F.	L.F.									L.F.	L.F.	L.S.				EA.	EA.	EA.	EA.	EA.	EA.	EA.
D2		PIER HE-20 SCUPPER OUTFALL																													L.S.										
D3	26	DI TYPE K			12																																	1			
		24" PIPE	26	27			108.5								6.2						182																				
	27	DI TYPE K-1																																					1		
		24" PIPE	27	28			30.0								1.7						42																				
	28	PIPE OUTFALL			12							3.6																													
	30	DI TYPE S			13																																				1
		EXIST. 30" PIPE	30	31																																					
	31	MH TYPE 1A																																	1						
		30" PIPE	31	32			23.8								1.5															35											
D3	32	PIPE OUTFALL			13							3.6																													
		H-1 MEDIAN													20.8																										
		SUB TOTAL THIS SHEET					168.3					7.2			30.2						224									35		L.S.				1			1	1		1
		TOTAL					1066.5					7.2			85.8					106	885									179	454	L.S.				1	1	1	1	1	1	1
		ROUNDED TOTAL					1070					8			86					106	885									179	454	L.S.				1	1	1	1	1	1	1

ORIGINAL PLAN
NOTE BOOK No.
SURVEY PLOTTED BY DATE
DRAWN BY "
TRACED BY "
DESIGNED BY "
QUANTITIES BY "
CHECKED BY "

FED. ROAD DIST. NO.	STATE	FED. AID PROJ. NO.	FISCAL YEAR	SHEET NO.	TOTAL SHEETS
HAWAII	HAW.	I-IR-H1-1(63)-17	1983	72	280

DRAINAGE SUMMARY

STRUCTURES			CULVERTS		ESTIMATED QUANTITIES																																			
					ITEM NO.	604	604	604	604	604	604	604	604	604	604	604	604	604	605	605	605	605				612	640	640	653	655	678	678										
						.6221	.6222	.6300	.6310	.6320	.6330	.6340	.6350	.6400	.6500	.6600	.6700	.6800	.0006	.0106	.3000	.4000				.0100	.8000	.8100	.0100	.1000	.1000	.3000										
DRAINAGE SHEET	STRUCTURE NUMBER	TYPE	FROM STRUCTURE NO.	TO STRUCTURE NO.	DRAINLINE NO.	TYPE 'K-2' DROP INTAKE	TYPE 'K-3' DROP INTAKE	TYPE 'A' CATCH BASIN, 2.00 FEET TO 2.99 FEET	TYPE 'A' CATCH BASIN, 4.00 FEET TO 4.99 FEET	TYPE 'B' CATCH BASIN, 4.00 FEET TO 4.99 FEET	TYPE 'B' CATCH BASIN, 5.00 FEET TO 5.99 FEET	TYPE 'D' CATCH BASIN, 4.00 FEET TO 4.99 FEET	TYPE 'D' CATCH BASIN, 5.00 FEET TO 5.99 FEET	TYPE 'F' CATCH BASIN	DRAINLINE #1 BOX CULVERT	DRAINLINE #3 BOX CULVERT	HEADWALLS FOR PIPE CULVERTS	CONCRETE PROTECTION FOR PIPES	6-INCH PERFORATED UNDERDRAIN PIPE	6-INCH NON-PERFORATED UNDERDRAIN PIPE	UNDERDRAIN CLEANOUT	FILTER FABRIC UNDERDRAIN				GROUTED RUBBLE PAVING	LINED DITCH, TYPE 1	LINED DITCH, TYPE 2	TEMPORARY GROUND COVER	GROUND PROTECTION MATERIAL	IRRIGATION SLEEVE, 6-INCH ACP, CL.III	IRRIGATION SLEEVE 12-INCH ACP, CL.III										
					UNIT	EA.	EA.	EA.	EA.	EA.	EA.	EA.	EA.	EA.	L.S.	L.S.	L.S.	L.S.	L.F.	L.F.	EA.	L.F.				C.Y.	L.S.	L.S.	S.F.	C.Y.	L.F.	L.F.										
D-2	33	DROP INTAKE TYPE 'K-2'				1																																		
D-2	34	DROP INTAKE TYPE 'K-3'					1																																	
		FILTER FABRIC UNDERDRAIN																				2665																		
		6" PERFORATED UNDERDRAIN PIPE																	2470																					
		6" NON PERFORATED UNDERDRAIN PIPE																		195																				
		UNDERDRAIN CLEANOUT																			11																			
		GROUTED RUBBLE PAVING																								142														
		TEMPORARY GROUND COVER																											297,000											
		GROUND PROTECTION MATERIAL																												826.3										
		6" IRRIGATION SLEEVE																													141									
		12" IRRIGATION SLEEVE																(L.S.)														329								
D-2	1	INLET STRUCTURE			1																																			
D-2		DRAINLINE #1 BOX CULVERT	1	2	1										L.S.																									
D-2	2	OUTLET STRUCTURE			1																																			
		SUBTOTAL THIS SHEET																	2470	195	11	2665				142			297,000	826.3	141	329								
		TOTAL				1	1	1	1	1	1	2	4	1	L.S.	L.S.	L.S.	L.S.	2470	195	11	2665				142	(207 L.F.)	(272 L.F.)	297,000	826.3	141	329								
		ROUNDED TOTAL				1	1	1	1	1	1	2	4	1	L.S.	L.S.	L.S.	L.S.	2470	195	11	2665				142	(207 L.F.)	(272 L.F.)	300,000	830	141	329								

ORIGINAL PLAN | NOTE BOOK No. | SURVEY PLOTTED BY | DRAWN BY | TRACED BY | DESIGNED BY | QUANTITIES BY | CHECKED BY | DATE