FED. ROAD DIST. NO.	STATE	FED. AID PROJ. NO.	FISCAL YEAR	SHEET NO.	TOTAL SHEETS
HAWAII	HAW.	I-HI-I(168):17	1982	60	145

INDEX OF BRIDGE DRAWINGS

ESTIMATED QUANTITIES

ITEM NO.	ITEM	UNIT	QUANTITIES H-1 (E.B.)	RAMP C	HOV RAMP
206.6000	STRUCTURE EXCAVATION FOR BRIDGES	CU. YD.	2,700	—	1170
503.1900	CONCRETE IN BRIDGES (EXCEPT FOOTINGS), H-1 (E.B.)	LUMP SUM	2,510	—	—
503.1910	CONCRETE IN BRIDGES (EXCEPT FOOTINGS), RAMP C	LUMP SUM	—	120	—
503.1920	CONCRETE IN BRIDGE (EXCEPT FOOTINGS), HOV RAMP	LUMP SUM	—	—	730
503.1960	CONCRETE IN BRIDGE FOOTINGS, H-1 (E.B.) VIADUCT	LUMP SUM	800	—	—
503.1970	CONCRETE IN BRIDGE FOOTINGS, HOV RAMP	LUMP SUM	—	—	340
503.6000	TREMIE CONCRETE, H-1 (E.B.) VIADUCT	LUMP SUM	650	—	—
503.6010	TREMIE CONCRETE, HOV RAMP	LUMP SUM	—	—	281
504.0100	ERECTING GIRDERS, H-1 (EB)	LUMP SUM	(65 EA)	—	—
504.0200	ERECTING GIRDERS, RAMP C	LUMP SUM	—	(6 EA)	—
504.0300	ERECTING GIRDERS, HOV RAMP	LUMP SUM	—	—	(24 EA)
505.0030	STRAND SLIPPAGE MEASUREMENT ON PILES	EACH	600	—	250
505.0430	PRECAST, PRESTRESSED CONCRETE PILES, 16 1/2" OCT., FURNISHED	LIN. FT.	23,500	—	11,600
505.4800	FURNISHING AND INSTALLING MALE OR FEMALE SPLICE COUPLING	EACH	580	—	270
505.4300	PRECAST, PRESTRESSED CONCRETE PILES, 16 1/2" OCT., DRIVEN	LIN. FT.	22,400	—	11,200
505.6100	SLEEVED HOLE, 30 INCH DIA. (DOMESTIC STEEL)	LIN. FT.	242	—	116
505.7000	UNUSED MALE OR FEMALE SPLICE COUPLING	EACH	100	—	—
505.8100	PILE DRIVING SHOE	EACH	116	—	54
505.9100	PILE DRIVING EQUIPMENT EXPENSE (NOT TO EXCEED $8000)	LUMP SUM	—	—	—
505.9201	'BUILD-UPS' OF PILES, H-1 (E.B.) VIADUCT	F. A.	—	—	—
505.9202	'BUILD-UPS' OF PILES, HOV RAMP	F. A.	—	—	—
505.9301	RETAPPING OF PILES, H-1 (E.B.) VIADUCT	F. A.	—	—	—
505.9302	RETAPPING OF PILES, HOV RAMP	F. A.	—	—	—
505.9402	PILE ACCEPTANCE TEST, H-1 (E.B.) VIADUCT	F. A.	—	—	—
505.9403	PILE ACCEPTANCE TEST, HOV RAMP	F. A.	—	—	—
505.9406	REPLACEMENT OF HAMMER	F. A.	—	—	—
505.9407	REPAIR OR REPLACEMENT OF ENGINEERS EQUIPMENT	F. A.	—	—	—
507.7100	STANDARD PARAPET	LIN. FT.	1,120	105	1,155
511.0100	DECK EXPANSION JOINT	LIN. FT.	400	37	170
602.1300	REINFORCING STEEL IN BRIDGES; H-1 (E.B.) VIADUCT	LUMP SUM	632,700	—	—
602.1310	REINFORCING STEEL IN BRIDGES; RAMP C	LUMP SUM	—	24,300	—
602.1320	REINFORCING STEEL IN BRIDGES; HOV RAMP	LUMP SUM	—	—	181,900
604.5000	FURNISHING AND INSTALLING TYPE A-12 FRAME AND GRATE FOR DECK DRAINAGE	EACH	14	1	6
634.0300	EXPLORATORY WORK AT STRUCTURE FOOTINGS, H-1 (E.B.) VIADUCT	F. A.	—	—	—
634.0310	EXPLORATORY WORK AT STRUCTURE FOOTINGS, HOV RAMP	F. A.	—	—	—
660.0100	BITUMEN COATING	SQ. YD.	7,500	—	3,500

PRESTRESSED CONCRETE GIRDERS WILL BE FURNISHED BY OTHERS

JOHN P. JOHNSON REGISTERED PROFESSIONAL ENGINEER No. 3647 HAWAII, U.S.A.

THIS WORK WAS PREPARED BY ME OR UNDER MY SUPERVISION.

John P. Johnson

STATE OF HAWAII
DEPARTMENT OF TRANSPORTATION
HIGHWAYS DIVISION
H-1 VIADUCT (E.B.), RAMP C & HOV RAMP

INDEX OF DRAWINGS AND ESTIMATED QUANTITIES

KEEHI INTERCHANGE
F.A.I. PROJ. NO. I-HI-1 (168):17
DATE: 8/17/81

SHEET No. T-1 OF T-23 SHEETS

ORIGINAL PLAN | SURVEY PLOTTED BY | DRAWN BY | TRACED BY | DESIGNED BY | QUANTITIES BY | CHECKED BY | DATE | NOTE BOOK No.

FED. ROAD DIST. NO.	STATE	FED. AID PROJ. NO.	FISCAL YEAR	SHEET NO.	TOTAL SHEETS
HAWAII	HAW.	I-H1 1(168):17	1982	61	145

NOTES:

1. For Scupper Details, see Sheet Nos. SD-8 & SD-9.
2. For Footing Location Plan, see Sheet Nos. T-5 & T-6.
3. For Transverse Joint Details, see Sheet Nos. SD-6 & SD-7.
4. For General Notes, see Sheet No. SD-1.
5. See Electrical Plans for locations and number of conduit.
6. Location of Scuppers shown on plans is approximate. In order to clear the obstructions or to facilitate the construction of the Viaduct, the location of scuppers may be adjusted by 2 to 3 feet, but total number of Scuppers in each span shall remain the same as shown on plans.

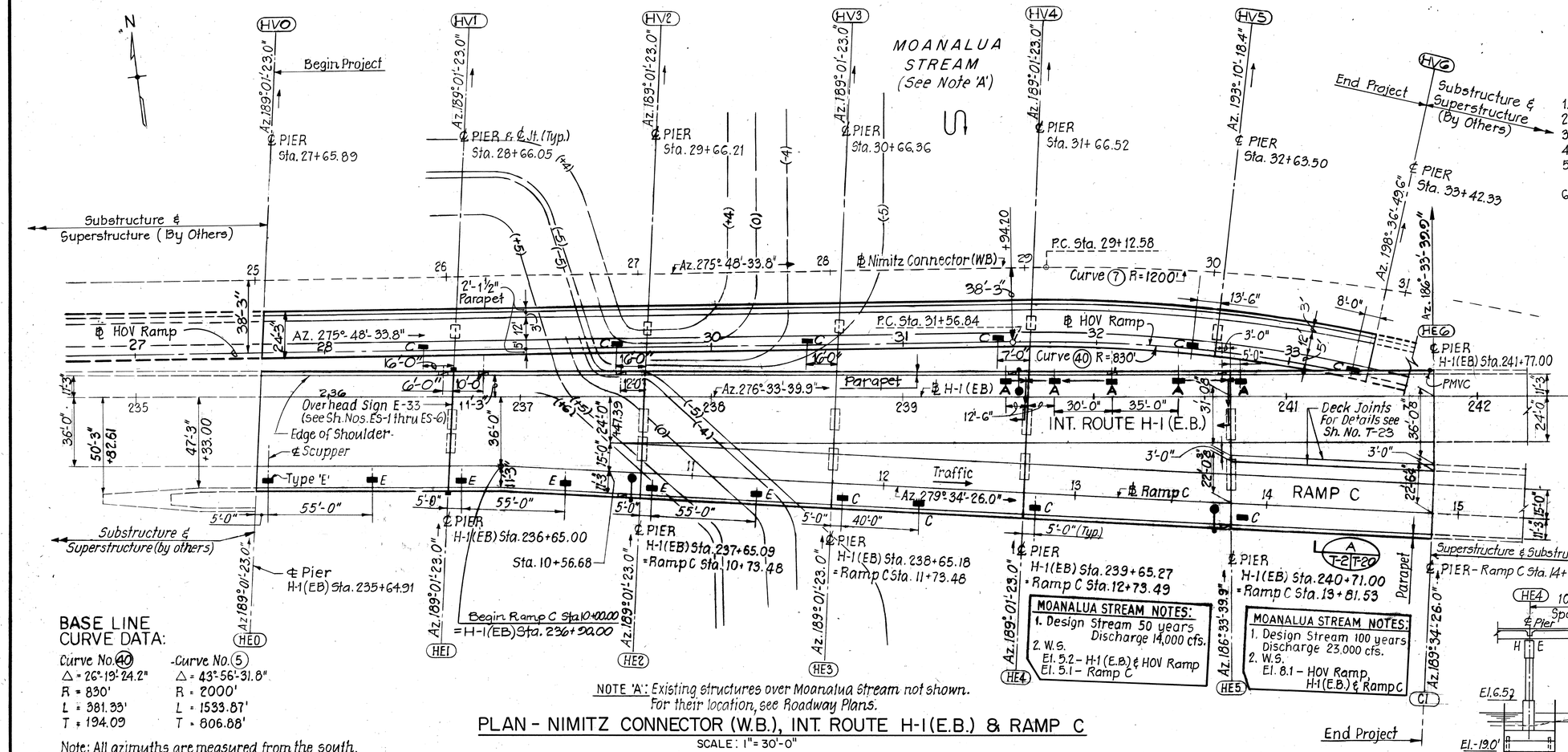

BASE LINE CURVE DATA:

Curve No. (40)	Curve No. (5)
Δ = 26°-19'-24.2"	Δ = 43°-56'-31.8"
R = 830'	R = 2000'
L = 381.99'	L = 1533.87'
T = 194.09	T = 806.88'

Note: All azimuths are measured from the south.

NOTE 'A': Existing structures over Moanalua Stream not shown. For their location, see Roadway Plans.

PLAN - NIMITZ CONNECTOR (W.B.), INT. ROUTE H-1 (E.B.) & RAMP C

SCALE: 1" = 30'-0"

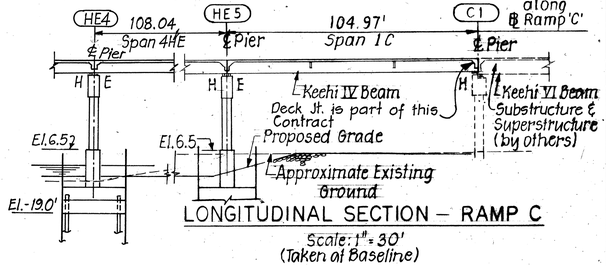

LONGITUDINAL SECTION - RAMP C

Scale: 1" = 30' (Taken at Baseline)

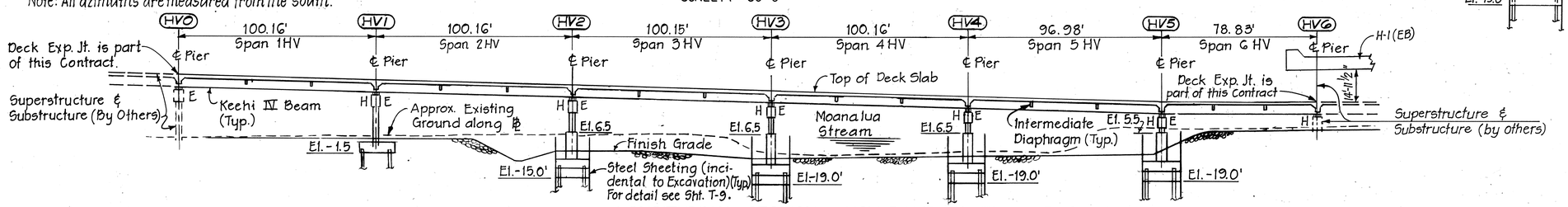

LONGITUDINAL SECTION - HOV RAMP (TAKEN AT BASELINE)

SCALE: 1" = 30'-0"

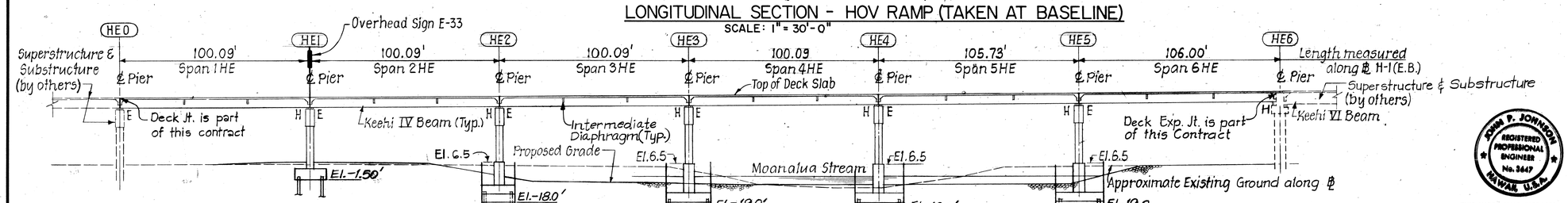

LONGITUDINAL SECTION - INT. ROUTE H-1 (E.B.)

(Taken at Baseline) Scale: 1" = 30'

LEGEND:

H = Hinge Bearings
E = Expansion Bearings
▬ = Scuppers
6'-0" 5'-6" ℄ Pier Unless Noted
℄ Pull Box (See Electrical Plans)
℄ Lighting Standard

PMVC = Point of Minimum Vertical Clearance

ORIGINAL PLAN	SURVEY PLOTTED BY	DATE
	DRAWN BY PATRICIA MALKIN	
	TRACED BY	
	DESIGNED BY C.Y.	
NOTE BOOK	QUANTITIES BY	
No.	CHECKED BY	

JOHN P. JOHNSON REGISTERED PROFESSIONAL ENGINEER No. 3647 HAWAII, U.S.A.

THIS WORK WAS PREPARED BY ME OR UNDER MY SUPERVISION.

STATE OF HAWAII
DEPARTMENT OF TRANSPORTATION
HIGHWAYS DIVISION

H-1 VIADUCT (E.B.), RAMP C & HOV RAMP

GENERAL PLAN AND LONGITUDINAL SECTION

KEEHI INTERCHANGE
F.A.I. PROJ. NO. I-H1-1 (168):17

SCALE: AS SHOWN DATE: 8/17/81

SHEET NO. T-2 OF T-23 SHEETS

FED. ROAD DIST. NO.	STATE	FED. AID PROJ. NO.	FISCAL YEAR	SHEET NO.	TOTAL SHEETS
HAWAII	HAW.	1-H1-1(168)-17	1982	62	145

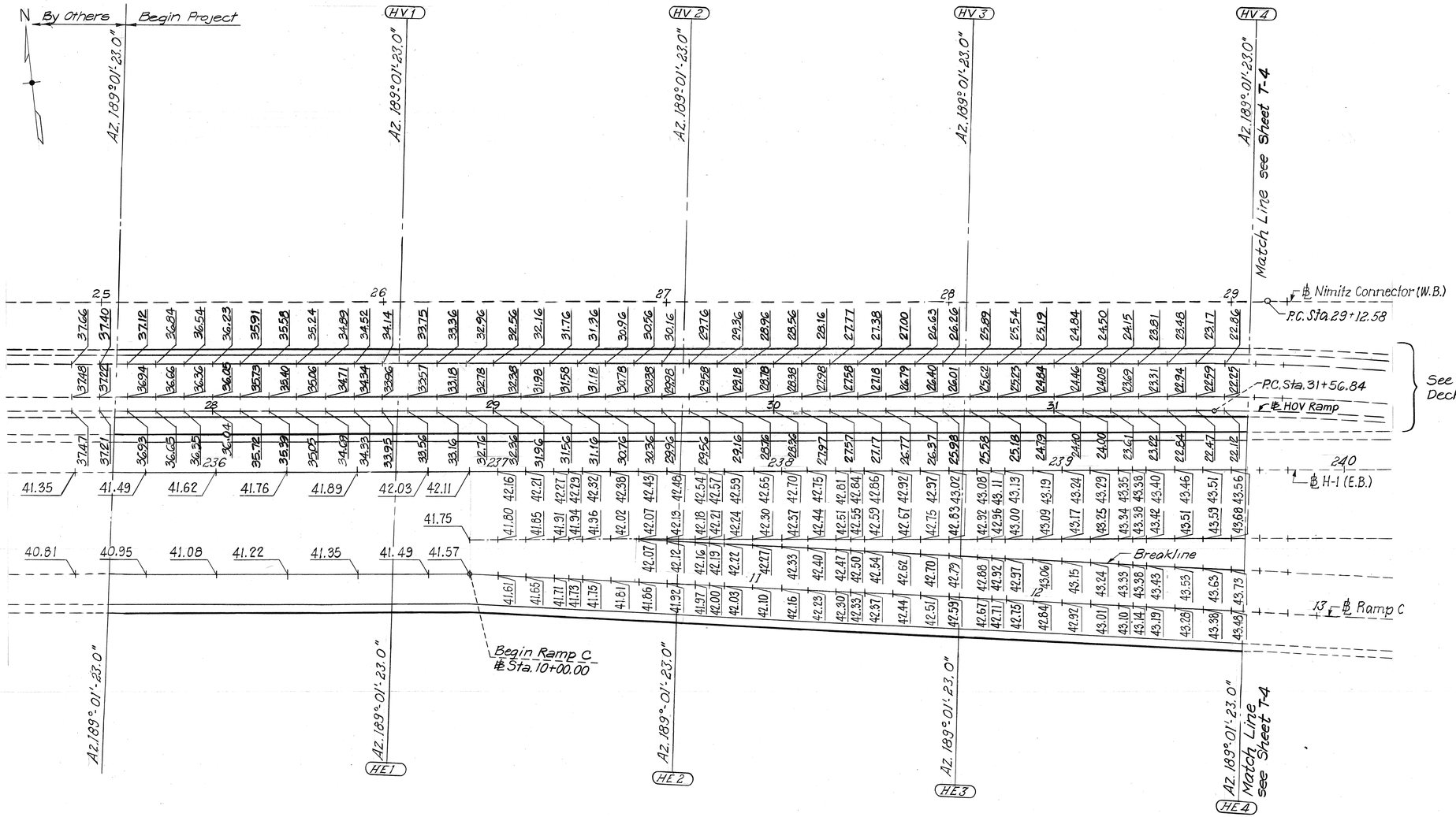

PLAN

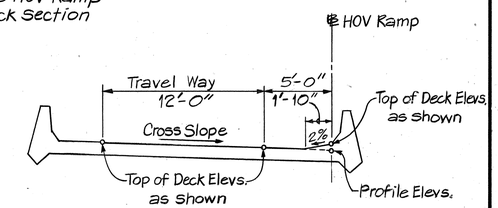

HOV RAMP DECK SECTION

N.T.S.

NOTES:

1. Deck Elevations are shown at 10'-0" intervals in transition areas, and at 25'-0" intervals in non-transition areas.
2. For Scupper Locations, see Sh. No. T-2.

ORIGINAL PLAN	SURVEY PLOTTED BY:
	DRAWN BY: PHILIP WALKIN
	TRACED BY:
NOTE BOOK	DESIGNED BY: J. Chandler
	QUANTITIES BY:
No.	CHECKED BY: D. GILSTAD

DATE

JOHN P. JOHNSON REGISTERED PROFESSIONAL ENGINEER No. 3647 HAWAII, U.S.A.

THIS WORK WAS PREPARED BY ME OR UNDER MY SUPERVISION.

John P. Johnson

STATE OF HAWAII
DEPARTMENT OF TRANSPORTATION
HIGHWAYS DIVISION

H-1 VIADUCT (E.B.), RAMP C & HOV RAMP

DECK ELEVATIONS
SHEET 1 OF 2

KEEHI INTERCHANGE
F.A.I. PROJ. NO. 1-H1-1 (168)-17
SCALE: 1" = 20'-0" DATE: 8/17/81

SHEET No. T-3 OF T-23 SHEETS

FED. ROAD DIST. NO.	STATE	FED. AID PROJ. NO.	FISCAL YEAR	SHEET NO.	TOTAL SHEETS
HAWAII	HAW.	I-H1-1(168)17	1982	63	145

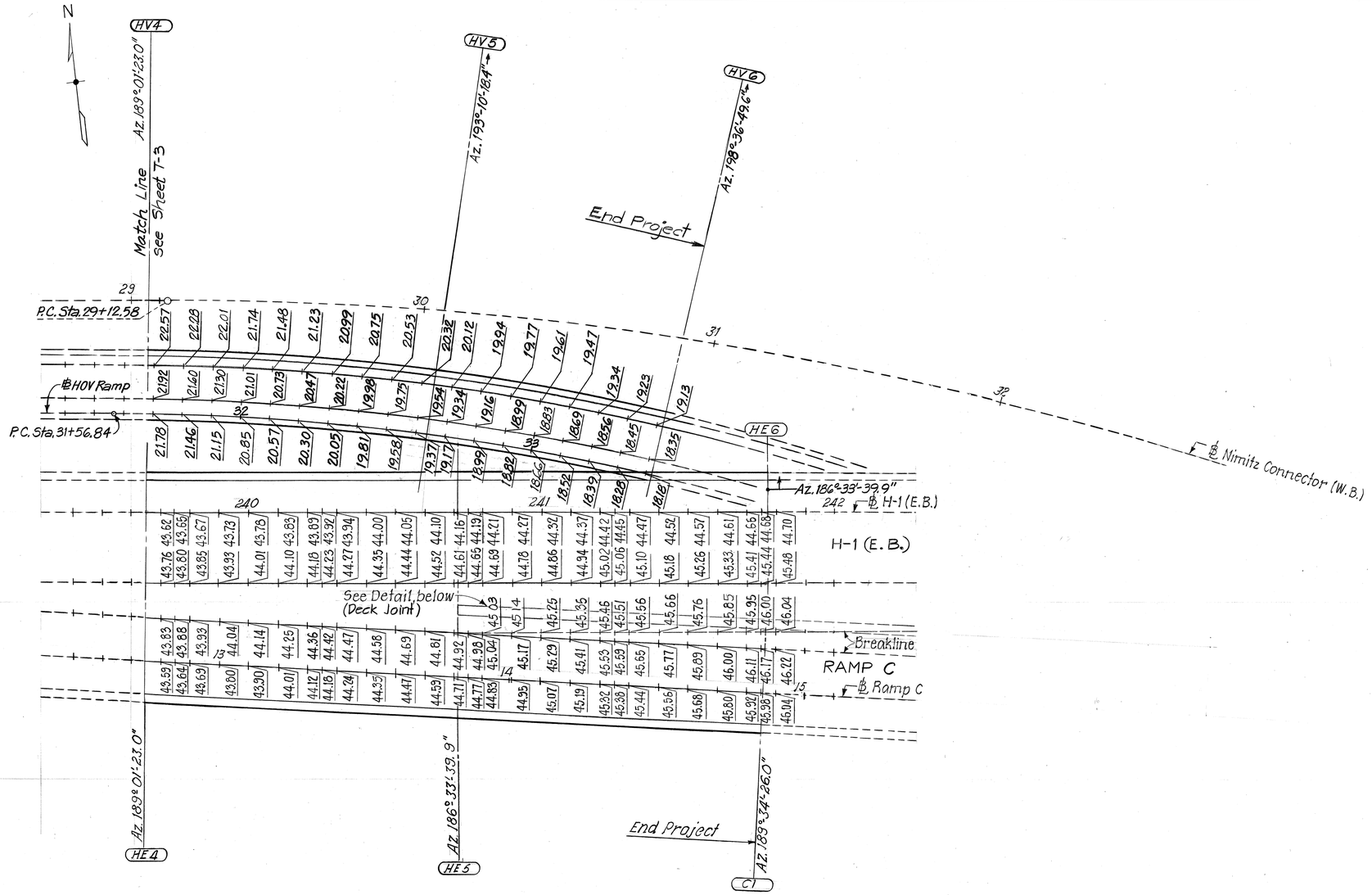

PLAN

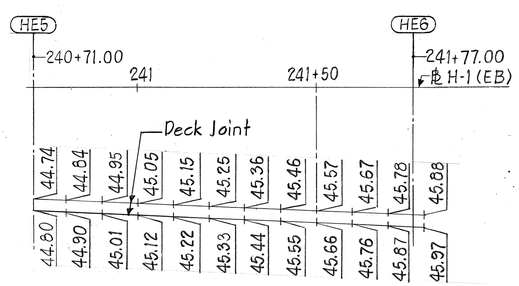

H-1 (EB) / RAMP C NOSE AREA ELEVATIONS

NOTE:
For Notes and HOV Ramp Deck Section see Sheet No. T-3.

ORIGINAL PLAN	SURVEY PLOTTED BY	DATE
	DRAWN BY PHILO B. MALKIN	
	TRACED BY	
NOTE BOOK	DESIGNED BY	
	QUANTITIES BY	
No.	CHECKED BY DREW GILSTAD	

JOHN P. JOHNSON
REGISTERED PROFESSIONAL ENGINEER
No. 3647
HAWAII, U.S.A.

THIS WORK WAS PREPARED BY ME OR UNDER MY SUPERVISION.

STATE OF HAWAII
DEPARTMENT OF TRANSPORTATION
HIGHWAYS DIVISION

H-1 VIADUCT (E.B.), RAMP C & HOV RAMP

DECK ELEVATIONS
SHEET 2 OF 2

KEEHI INTERCHANGE
F.A.I. PROJ. NO. I-HI-1 (168)17
SCALE: 1" = 20'-0" DATE: 8/17/81

SHEET No. T-4 OF T-23 SHEETS

FED. ROAD DIST. NO.	STATE	FED. AID PROJ. NO.	FISCAL YEAR	SHEET NO.	TOTAL SHEETS
HAWAII	HAW.	I-HI-I(168)-17	1982	64	145

LEGEND

(+) Precast, Prestressed Concrete Piles, 16 1/2" octagonal, Type A. Design Capacity See Sheet No. SD-1. (For Details see Shs. No. SD-10 thru SD-12)

PCE : Pile Cut-off Elevation.
PTE : Estimated Pile Tip Elev.
BCE : Elevation of Lower Limit of Bitumen coating.

NOTES :

1. For Table of Pile Load Test (By Others) and Applicable Footings, see Sheet SD-11.
2. Work this drawing with sheet No. T-6.
3. Contractor shall verify location of Existing Utilities before excavation starts.
4. For Excavation payment limits, see sheet No. T-3.
5. Use Outfall Type 2 for piers HE4 and HE5. The Invert Elevations of Outfall are +6.50. See Outfall Detail F/SD-9 with the exception of omitting 5'x5'x6" crushed rock pad.
6. See Tables on Sheet T-6 for Type of Footing, Thickness of Footing and Number of Piles.

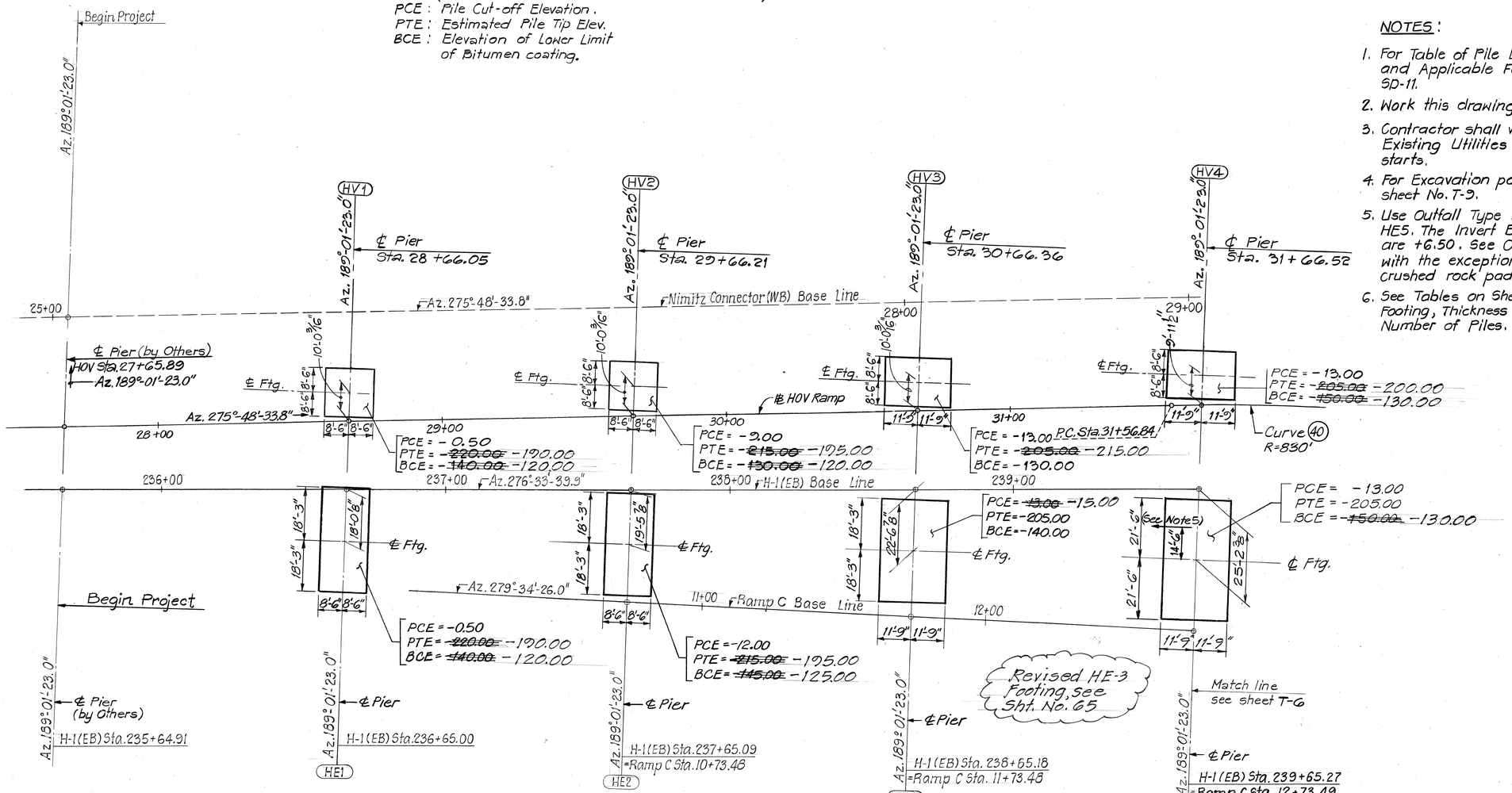

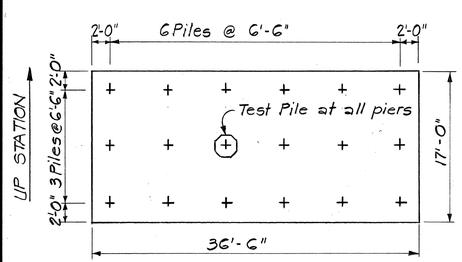

TYPE A

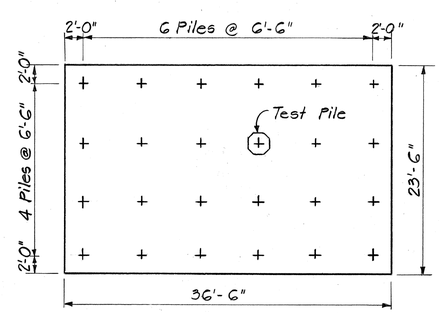

TYPE B

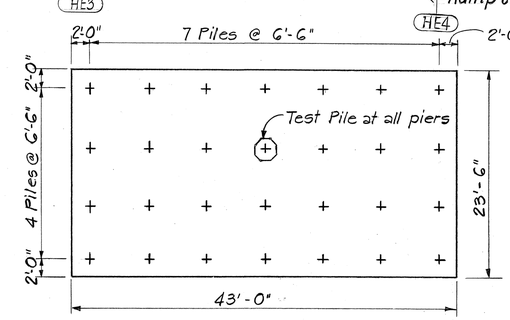

TYPE C

PILE PLAN TYPES (See Table on Sheet T-6)
N.T.S.

ORIGINAL PLAN	SURVEY PLOTTED BY	DATE
	DRAWN BY	
	TRACED BY	
	DESIGNED BY	
NOTE BOOK	QUANTITIES BY	
No.	CHECKED BY	

JOHN P. JOHNSON REGISTERED PROFESSIONAL ENGINEER No. 3647 HAWAII, U.S.A.

THIS WORK WAS PREPARED BY ME OR UNDER MY SUPERVISION.
John P. Johnson

STATE OF HAWAII
DEPARTMENT OF TRANSPORTATION
HIGHWAYS DIVISION
H-1 VIADUCT (E.B.), RAMP C & HOV RAMP

FOOTING LOCATION PLAN
SHEET 1 OF 2

KEEHI INTERCHANGE
F.A.I. PROJ. NO. I-HI-1 (168)-17
SCALE: 1" = 20'-0" DATE: 8/17/81
SHEET NO. T-5 OF T-23 SHEETS

FED. ROAD DIST. NO.	STATE	FED. AID PROJ. NO.	FISCAL YEAR	SHEET NO.	TOTAL SHEETS
HAWAII	HAW.	I-HI-I(168)-17	1982	65	145

This tracing/detail prepared during "As-Built" posting

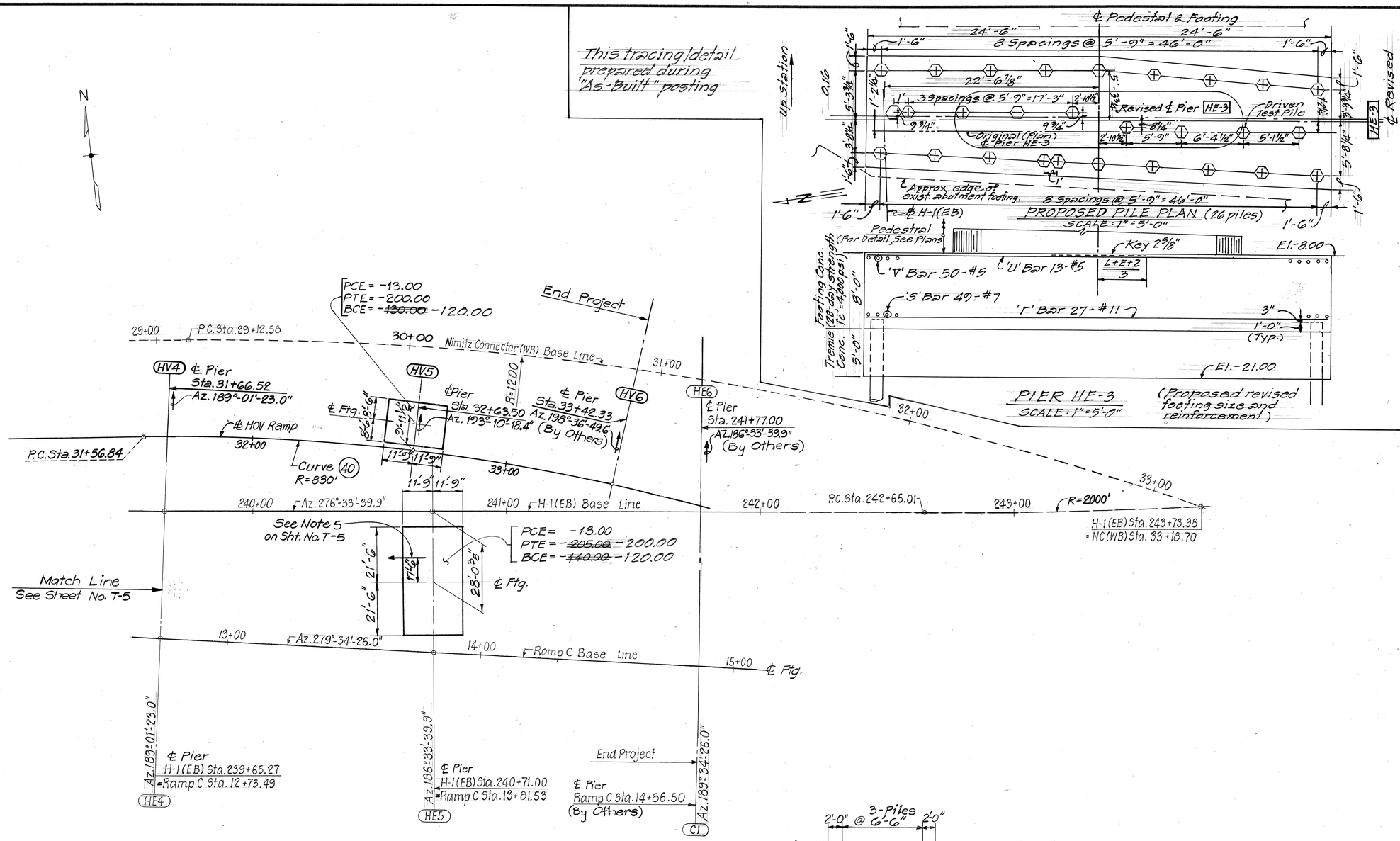

PILE PLAN TYPES (See Table Above)

PIER TYPE I & OTHER

PIER	FOOTING TYPES	THICKNESS OF FOOTING	NO. OF PILES
HV1	E	5'-0"	9

PIER TYPE II

PIER	FOOTING TYPES	THICKNESS OF FOOTING	NO. OF PILES
HE1	A	5'-6"	18

PIER TYPE III

	FOOTING TYPES	THICKNESS OF FOOTING	NO. OF PILES
HE2	A	6'-0"	18
HE3	B	5'-0"	24
HE4, HE5	C	5'-0"	28
HV3 THRU HV5	D	5'-0"	12
HV2	E	5'-6"	9

NOTES:

1. Work this drawing with sheet No. T-5.
2. For Legend & Notes see Sheet No. T-5.

ORIGINAL PLAN		DATE
	SURVEY PLOTTED BY	
	DRAWN BY	
	TRACED BY	
NOTE BOOK	DESIGNED BY	
	QUANTITIES BY	
No.	CHECKED BY	

JOHN P. JOHNSON REGISTERED PROFESSIONAL ENGINEER No. 3647 HAWAII, U.S.A.

THIS WORK WAS PREPARED BY ME OR UNDER MY SUPERVISION.

STATE OF HAWAII
DEPARTMENT OF TRANSPORTATION
HIGHWAYS DIVISION

H-1 VIADUCT (E.B.), RAMP C & HOV RAMP

FOOTING LOCATION PLAN
SHEET 2 OF 2

KEEHI INTERCHANGE
F.A.I. PROJ. NO. I-HI-1(168)-17
SCALE: 1" = 20'-0" DATE: 8/17/81

SHEET No. T-6 OF T-23 SHEETS

FED. ROAD DIST. NO.	STATE	FED. AID PROJ. NO.	FISCAL YEAR	SHEET NO.	TOTAL SHEETS
HAWAII	HAW.	I-HI-1(168):17	1982	66	145

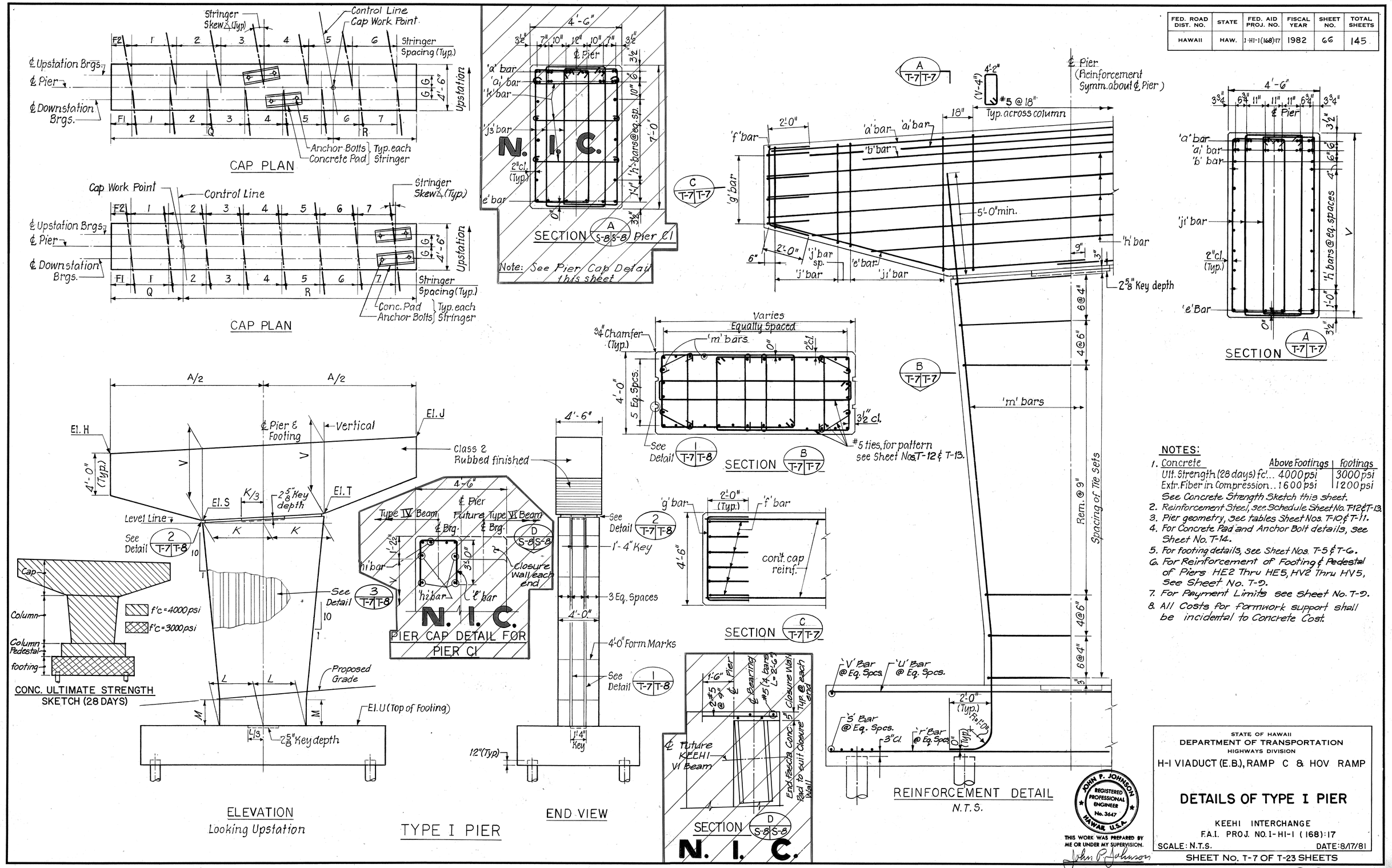

NOTES:

1. Concrete

	Above Footings	footings
Ult. Strength (28 days) f'c...	4000 psi	3000 psi
Extr. Fiber in Compression...	1600 psi	1200 psi

See Concrete Strength Sketch this sheet.
2. Reinforcement Steel, see Schedule Sheet No. T-12 & T-13.
3. Pier geometry, see tables Sheet Nos. T-10 & T-11.
4. For Concrete Pad and Anchor Bolt details, see Sheet No. T-14.
5. For footing details, see Sheet Nos. T-5 & T-6.
6. For Reinforcement of Footing & Pedestal of Piers HE2 Thru HE5, HV2 Thru HV5, see Sheet No. T-9.
7. For Payment Limits see Sheet No. T-9.
8. All Costs for formwork support shall be incidental to Concrete Cost.

SURVEY PLOTTED BY
DRAWN BY PATRICIA MALKIN
TRACED BY
DESIGNED BY DEGU GILSTAD
QUANTITIES BY
CHECKED BY HABIB NOORATA
DATE
ORIGINAL PLAN
NOTE BOOK
No.

STATE OF HAWAII
DEPARTMENT OF TRANSPORTATION
HIGHWAYS DIVISION

H-1 VIADUCT (E.B.), RAMP C & HOV RAMP

DETAILS OF TYPE I PIER

KEEHI INTERCHANGE
F.A.I. PROJ. NO. I-HI-1 (168):17
SCALE: N.T.S. DATE: 8/17/81

JOHN P. JOHNSON REGISTERED PROFESSIONAL ENGINEER No. 3647 HAWAII, U.S.A.

THIS WORK WAS PREPARED BY ME OR UNDER MY SUPERVISION.
John P. Johnson

SHEET No. T-7 OF T-23 SHEETS

FED. ROAD DIST. NO.	STATE	FED. AID PROJ. NO.	FISCAL YEAR	SHEET NO.	TOTAL SHEETS
HAWAII	HAW.	I-HI-1(168)17	1982	67	145

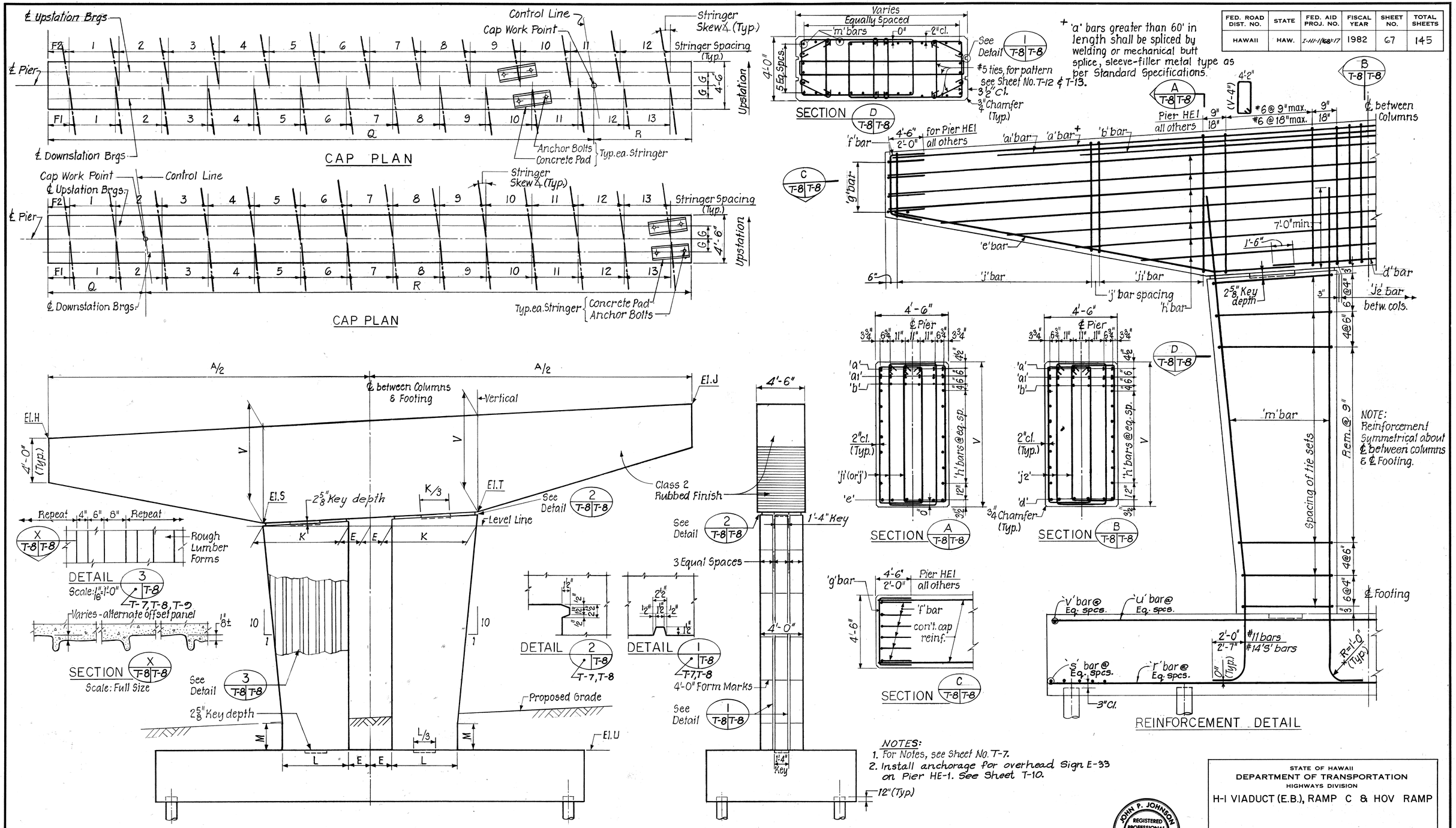

SURVEY PLOTTED BY
DRAWN BY: PATRICIA MALKIN
TRACED BY
DESIGNED BY: DRELL GILSTAD
QUANTITIES BY
CHECKED BY: HABIB NOORATA
DATE
ORIGINAL PLAN
NOTE BOOK
NO.

THIS WORK WAS PREPARED BY ME OR UNDER MY SUPERVISION.

JOHN P. JOHNSON
REGISTERED PROFESSIONAL ENGINEER
No. 3647
HAWAII U.S.A.

STATE OF HAWAII
DEPARTMENT OF TRANSPORTATION
HIGHWAYS DIVISION

H-1 VIADUCT (E.B.), RAMP C & HOV RAMP

DETAILS OF TYPE II PIER

KEEHI INTERCHANGE
F.A.I. PROJ. NO. I-HI-1 (168):17
SCALE: N.T.S.
DATE: 8/17/81

SHEET No. T-8 OF T-23 SHEETS

FED. ROAD DIST. NO.	STATE	FED. AID PROJ. NO.	FISCAL YEAR	SHEET NO.	TOTAL SHEETS
HAWAII	HAW.	I-HI-1(168):17	1982	68	145

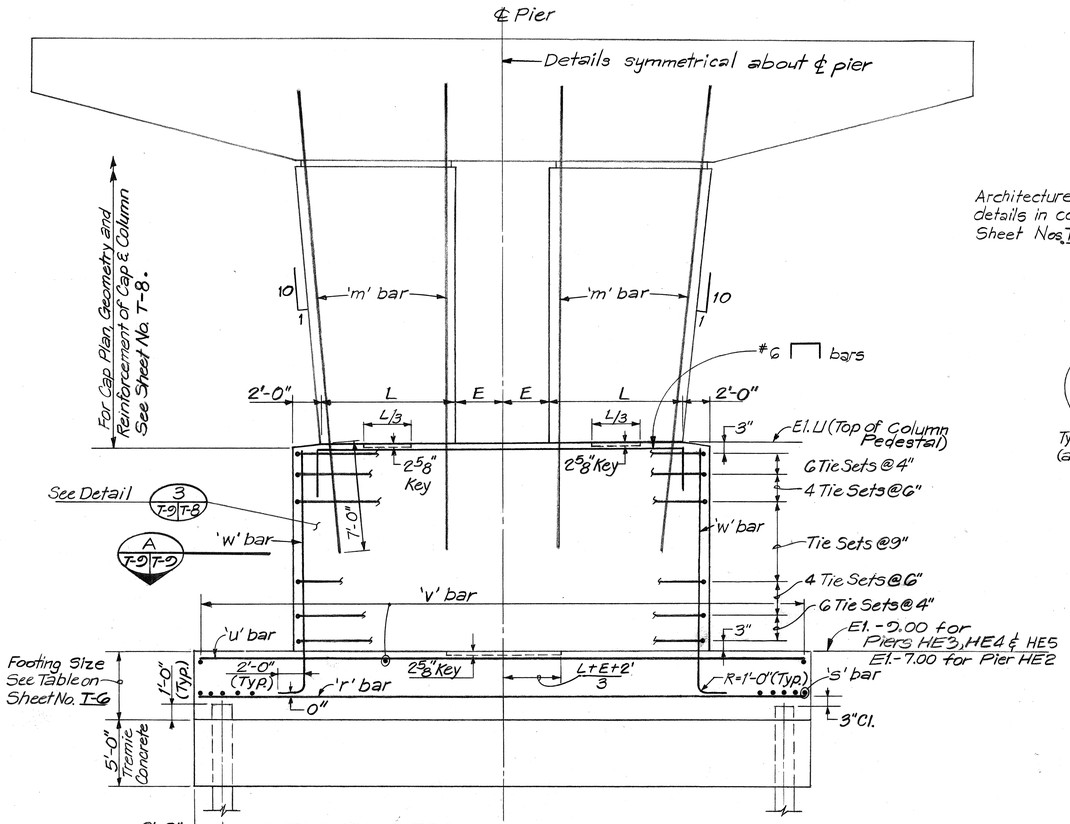

ELEVATION-PIERS HE2 THRU HE5
LOOKING UPSTATION
N.T.S.

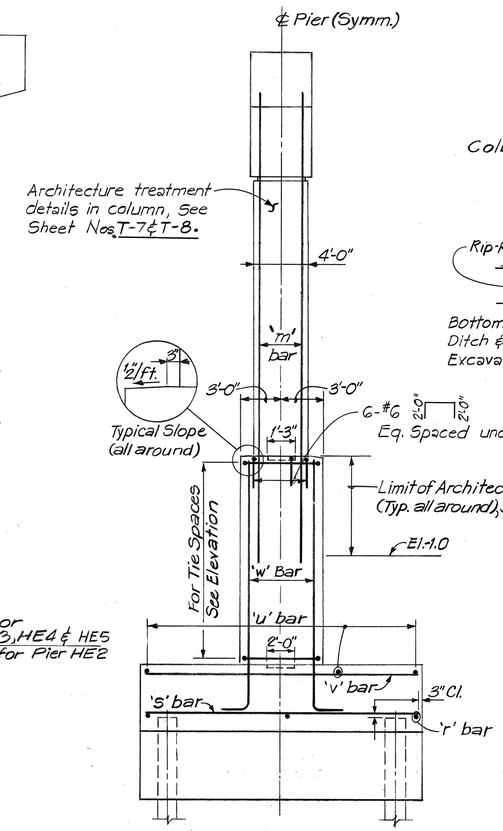

END VIEW-PIERS HV2 THRU HV5, HE2 THRU HE5
N.T.S.

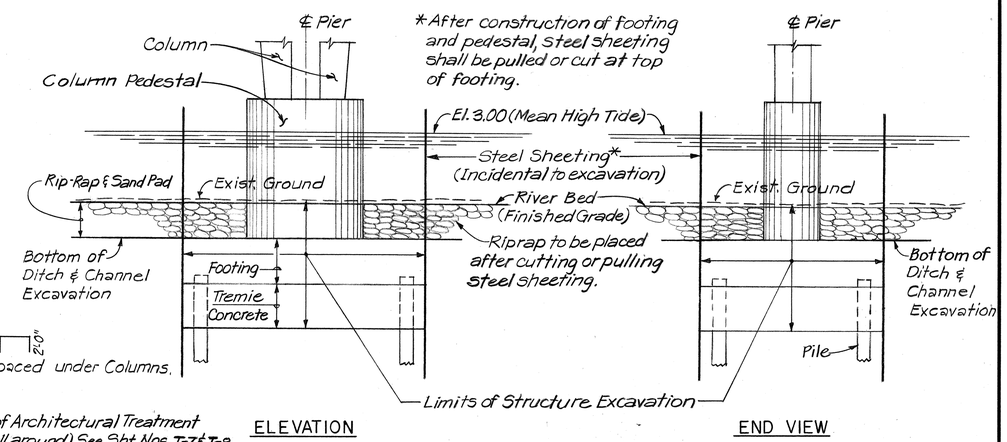

ELEVATION

END VIEW

PAYMENT LIMITS
(PIERS HE2 THRU HE5, HV2 THRU HV5
N.T.S.

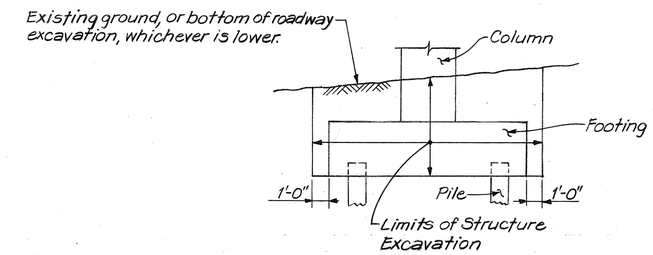

PAYMENT LIMITS
PIERS HE1 & HV1
N.T.S.

NOTES:

1. For Notes, see Sheet No. T-7.
2. For footing location plan & footing details, see Sheet Nos. T-5 and T-6.

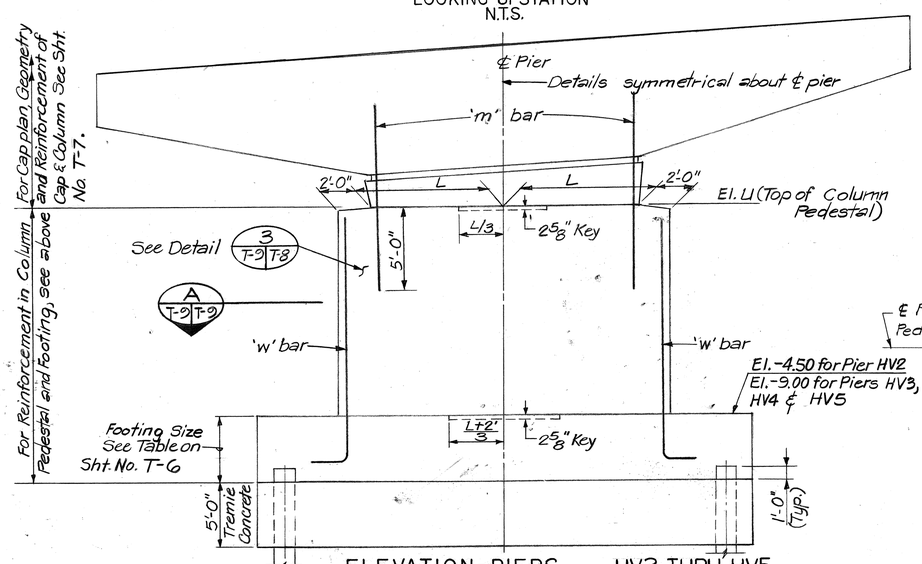

ELEVATION-PIERS HV2 THRU HV5
LOOKING UPSTATION
N.T.S.

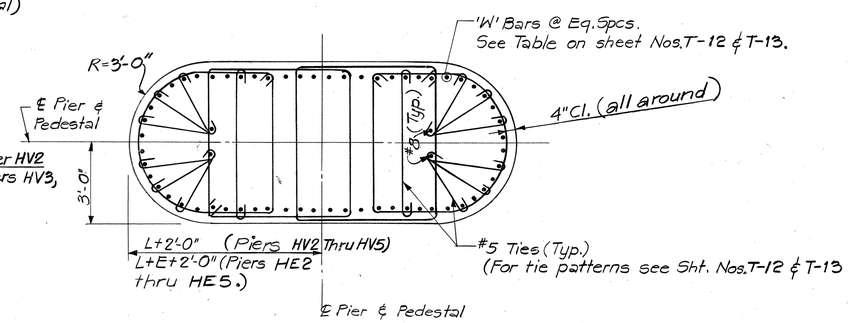

SECTION A T-9 T-9
N.T.S.

ORIGINAL PLAN	SURVEY PLOTTED BY	DATE
	DRAWN BY	
NOTE BOOK	TRACED BY	
	DESIGNED BY	
	QUANTITIES BY	
No.	CHECKED BY	

JOHN P. JOHNSON
REGISTERED PROFESSIONAL ENGINEER
No. 3647
HAWAII, U.S.A.

THIS WORK WAS PREPARED BY ME OR UNDER MY SUPERVISION.

John P. Johnson

STATE OF HAWAII
DEPARTMENT OF TRANSPORTATION
HIGHWAYS DIVISION

H-1 VIADUCT (E.B.), RAMP C & HOV RAMP

DETAILS OF TYPE III PIER

KEEHI INTERCHANGE
F.A.I. PROJ. NO. I-HI-1 (168):17

SCALE: AS SHOWN DATE: 8/17/81

SHEET No. T-9 OF T-23 SHEETS

FED. ROAD DIST. NO.	STATE	FED. AID PROJ. NO.	FISCAL YEAR	SHEET NO.	TOTAL SHEETS
HAWAII	HAW.	I-HI-1(168):17	1982	69	145

TABLE OF PIER DIMENSIONS AND ELEVATIONS

PIER NAME			HE1		HE2		HE3		HE4		HE5		HE6		C1		HE 0						
PIER TYPE			II		III		III		III		III		(BY OTHERS)		(BY OTHERS)		(BY OTHERS)						
WORK POINT STA. OF ℄ PIER			236 + 65.00		237 + 65.09		238 + 65.18		239 + 65.27		240 + 71.00		241 + 77.00		14 + 86.50		235 + 64.91						
SOUTH AZIMUTH OF ℄ PIER			189°-01'-23.0"		189°-01'-23.0"		189°-01'-23.0"		189°-01'-23.0"		186°-33'-39.9"		186°-33'-39.9"		189°-34'-26.0"		189°-01'-23.0"						
CAP	LENGTH OF CAP "A"		70'-6 1/2"		64'-7"		70'-9"		76'-0"		81'-7 3/4"												
CAP	DIST. ℄ BRGS. TO ℄ PIER "G"		11"		11"		11"		11"		11"												
CAP	DEPTH "V"		9'-0"		9'-0"		9'-6"		9'-6"		9'-6"												
CAP	DIMENSION "F1"	DIMENSION "F2"	6'-5 1/2"	6'-5 1/2"	2'-0"	2'-0"	2'-0"	2'-0"	2'-0"	2'-0"	2'-0"	2'-0"											
CAP	DISTANCE "Q"	DISTANCE "R"	17'-3 1/8"	53-3 3/8"	12'-9 5/8"	51'-9 3/8"	12'-9 5/8"	57'-11 3/8"	12'-9 5/8"	63'-2 3/8"	12'-9 1/2"	68'-10 1/4"											
CAP	ELEVATION "H"	ELEVATION "J"	35.92	34.85	36.39	35.46	36.85	36.14	37.23	37.01	37.61	38.24											
COLUMN	DIMENSION "K"	DIMENSION "E"	11'-0"	1'-3 1/4"	11'-0"	1'-3 1/2"	12'-0"	3'-4 1/2"	14'-0"	4'-0"	16'-0"	4'-10"											
COLUMN	BOTTOM WIDTH "L"		8'-11"		9'-0"		9'-11"		11'-10"		13'-9"												
COLUMN	DIMENSION "M"	ELEVATION "U"	1'-4"	4.00	—	6.50(P)	—	6.50(P)	—	6.50(P)	—	6.50(P)											
COLUMN	ELEVATION "S"	ELEVATION "T"	26.57	26.20	27.10	26.75	27.15	26.84	27.67	27.57	28.26	28.59											
STRINGER SPACING DISTANCE MEASURED ALONG ℄ PIER	DOWN STA. 1	UP STA. 1	6'-3 5/8"	6'-3 5/8"	6'-8 3/4"	6'-0 11/16"	6'-8 1/8"	6'-0 7/8"	6'-6 9/16"	5'-6 1/2"	5'-11 5/8"	5'-8 3/16"	6'-4 7/8"		6'-3 3/16"		6'-3 5/8"						
	DOWN STA. 2	UP STA. 2			6'-8 13/16"		6'-8 1/16"	6'-0 13/16"		5'-6 7/16"	5'-11 11/16"	5'-8 1/4"	6'-4 15/16"		6'-3 1/8"								
	DOWN STA. 3	UP STA. 3			6'-8 3/4"		6'-8 1/8"	6'-0 13/16"		5'-6 1/2"					6'-3 1/8"								
	DOWN STA. 4	UP STA. 4			6'-8 3/4"		6'-8 1/8"	6'-0 13/16"		5'-6 7/16"					6'-3 1/8"								
	DOWN STA. 5	UP STA. 5			6'-8 13/16"		6'-8 1/16"	6'-0 13/16"		5'-6 1/2"					6'-3 3/16"								
	DOWN STA. 6	UP STA. 6			6'-8 3/4"		6'-8 1/8"	6'-0 13/16"		5'-6 1/2"		5'-8 1/4"	6'-4 15/16"										
	DOWN STA. 7	UP STA. 7			6'-8 3/4"		6'-8 1/8"	6'-0 13/16"		5'-6 7/16"		5'-8 3/16"	6'-4 7/8"				6'-3 5/8"						
	DOWN STA. 8	UP STA. 8			6'-8 13/16"		6'-8 1/8"	6'-0 13/16"		5'-6 1/2"		7'-0 1/8"											
	DOWN STA. 9	UP STA. 9	6'-3 5/8"	6'-3 5/8"	6'-8 3/4"	6'-0 11/16"	6'-8 1/16"	6'-0 13/16"		5'-6 1/2"		6'-2"											
	DOWN STA. 10	UP STA. 10				6'-0 3/4"	6'-8 1/8"	6'-0 13/16"		5'-6 7/16"		6'-2"											
	DOWN STA. 11	UP STA. 11						6'-0 7/8"	6'-6 9/16"	5'-6 1/2"		6'-2 1/16"											
	DOWN STA. 12	UP STA. 12								5'-6 7/16"	5'-11 11/16"	6'-2"											
	DOWN STA. 13	UP STA. 13								5'-6 1/2"	5'-11 5/8"	6'-2"											
	DOWN STA. 14	UP STA. 14																					
DOWN STATION ℄ BRGS.	(1) STRINGER	BRG. TYPE	1HE1	3H	2HE1	3H	3HE1	3H	4HE1	3H	5HE1	3H	6HE1		1C1								
	STR. SKEW X	PAD ELEV.	-1/2"	36.14	-1/2"	36.68	-1/2"	37.14	-1/2"	37.52	0"	37.93	0"	38.26	+1/16"	39.97							
	(2) STRINGER	BRG. TYPE	1HE2	2H	2HE2	2H	3HE2	2H	4HE2	2H	5HE2	2H	6HE2		1C2								
	STR. SKEW X	PAD ELEV.	-1/2"	36.05	-7/16"	36.58	-7/16"	37.09	-7/16"	37.56	+1/16"	38.04	+1/16"	38.46	+1/16"	40.13							
	(3) STRINGER	BRG. TYPE	1HE3	2H	2HE3	2H	3HE3	2H	4HE3	2H	5HE3	2H	6HE3		1C3								
	STR. SKEW X	PAD ELEV.	-1/2"	35.95	-7/16"	36.48	-3/8"	37.04	-3/8"	37.59	+1/8"	38.15	+3/16"	38.66	+1/16"	40.05							
	(4) STRINGER	BRG. TYPE	1HE4	2H	2HE4	2H	3HE4	2H	4HE4	2H	5HE4	2H	6HE4		1C4								
	STR. SKEW X	PAD ELEV.	-1/2"	35.85	-3/8"	36.37	-5/16"	36.99	-3/8"	37.62	+1/8"	38.26	+1/4"	38.87	0"	39.97							
	(5) STRINGER	BRG. TYPE	1HE5	2H	2HE5	2H	3HE5	2H	4HE5	2H	5HE5	2H	6HE5		1C5								
	STR. SKEW X	PAD ELEV.	-1/2"	35.76	-5/16"	36.27	-1/4"	36.~~93~~94	-5/16"	37.65	+3/16"	38.37	+5/16"	39.07	0"	39.89							
	(6) STRINGER	BRG. TYPE	1HE6	2H	2HE6	2H	3HE6	2H	4HE6	2H	5HE6	2H	6HE6		1C6								
	STR. SKEW X	PAD ELEV.	-1/2"	35.66	-1/4"	36.17	-1/8"	36.~~88~~89	-1/4"	37.68	+1/4"	38.48	+7/16"	39.27	0"	39.81							
	(7) STRINGER	BRG. TYPE	1HE7	2H	2HE7	2H	3HE7	2H	4HE7	2H	5HE7	2H	6HE7										
	STR. SKEW X	PAD ELEV.	-1/2"	35.57	-3/16"	36.08	-1/16"	36.~~83~~84	-3/16"	37.72	+5/16"	38.59	+1/2"	39.48									
	(8) STRINGER	BRG. TYPE	1HE8	2H	2HE8	2H	3HE8	2H	4HE8	2H	5HE8	2H	6HE8										
	STR. SKEW X	PAD ELEV.	-1/2"	35.47	-1/8"	35.99	0"	36.~~75~~76	-1/8"	37.75	+3/8"	38.71	+9/16"	39.68									
	(9) STRINGER	BRG. TYPE	1HE9	2H	2HE9	2H	3HE9	2H	4HE9	2H	5HE9	2H											
	STR. SKEW X	PAD ELEV.	-1/2"	35.37	-1/8"	35.90	+1/16"	36.~~65~~66	-1/16"	37.64	+3/8"	38.82											
	(10) STRINGER	BRG. TYPE	1HE10	3H	2HE10	3H	3HE10	2H	4HE10	2H	5HE10	2H											
	STR. SKEW X	PAD ELEV.	-1/2"	35.28	-1/16"	35.81	+1/8"	36.~~56~~57	0"	37.53	+7/16"	38.86											
	(11) STRINGER	BRG. TYPE					3HE11	3H	4HE11	2H	5HE11	2H											
	STR. SKEW X	PAD ELEV.					+1/4"	36.~~47~~48	+1/16"	37.42	+1/2"	38.78											
	(12) STRINGER	BRG. TYPE							4HE12	3H	5HE12	2H											
	STR. SKEW X	PAD ELEV.							+1/8"	37.31	+9/16"	38.70											
	(13) STRINGER	BRG. TYPE									5HE13	2H											
	STR. SKEW X	PAD ELEV.									+9/16"	38.61											
	(14) STRINGER	BRG. TYPE									5HE14	3H											
	STR. SKEW X	PAD ELEV.									+5/8"	38.53											
UP STATION ℄ BRGS.	(1) STRINGER	BRG. TYPE	2HE1	3E	3HE1	3E	4HE1	3E	5HE1	3E	6HE1	3E	7HE1	1E	2C1	1E	1HE1						
	STR. SKEW X	PAD ELEV.	-1/2"	36.15	-1/2"	36.69	-1/2"	37.15	-1/2"	37.53	0"	37.93	+1/16"	37.07	-7/16"	38.77	-1/2"	35.65					
	(2) STRINGER	BRG. TYPE	2HE2	2E	3HE2	2E	4HE2	2E	5HE2	2E	6HE2	2E	7HE2	1E	2C2	1E	1HE2						
	STR. SKEW X	PAD ELEV.	-7/16"	36.05	-7/16"	36.60	-7/16"	37.~~0~~11	-7/16"	37.56	+1/16"	38.04	+1/8"	37.28	-1/16"	38.94	-1/2"	35.56					
	(3) STRINGER	BRG. TYPE	2HE3	2E	3HE3	2E	4HE3	2E	5HE3	2E	6HE3	2E	7HE3	1E	2C3	1E	1HE3						
	STR. SKEW X	PAD ELEV.	-7/16"	35.96	-3/8"	36.51	-3/8"	37.06	-7/16"	37.59	+3/16"	38.15	+3/16"	37.48	-1/16"	38.86	-1/2"	35.46					
	(4) STRINGER	BRG. TYPE	2HE4	2E	3HE4	2E	4HE4	2E	5HE4	2E	6HE4	2E	7HE4	1E	2C4	1E	1HE4						
	STR. SKEW X	PAD ELEV.	-3/8"	35.86	-5/16"	36.42	-3/8"	37.~~0~~02	-3/8"	37.62	+1/4"	38.26	+5/16"	37.69	0"	38.78	-1/2"	35.36					
	(5) STRINGER	BRG. TYPE	2HE5	2E	3HE5	2E	4HE5	2E	5HE5	2E	6HE5	2E	7HE5	1E	2C5	1E	1HE5						
	STR. SKEW X	PAD ELEV.	-5/16"	35.77	-1/4"	36.32	-5/16"	36.97	-5/16"	37.65	+5/16"	38.36	+3/8"	37.50	0"	38.70	-1/2"	35.27					
	(6) STRINGER	BRG. TYPE	2HE6	2E	3HE6	2E	4HE6	2E	5HE6	2E	6HE6	2E	7HE6	1E	2C6	1E	1HE6						
	STR. SKEW X	PAD ELEV.	-1/4"	35.67	-1/8"	36.23	-1/4"	36.~~9~~93	-1/4"	37.67	+7/16"	38.47	+7/16"	38.11	0"	38.62	-1/2"	35.17					
	(7) STRINGER	BRG. TYPE	2HE7	2E	3HE7	2E	4HE7	2E	5HE7	2E	6HE7	2E	7HE7	1E			1HE7						
	STR. SKEW X	PAD ELEV.	-3/16"	35.58	-1/16"	36.14	-3/16"	36.~~8~~88	-1/4"	37.70	+1/2"	38.58	+1/2"	38.31			-1/2"	35.08					
	(8) STRINGER	BRG. TYPE	2HE8	2E	3HE8	2E	4HE8	2E	5HE8	2E	6HE8	2E	7HE8	1E			1HE8						
	STR. SKEW X	PAD ELEV.	-1/8"	35.48	0"	36.06	-1/8"	36.~~8~~83	-3/16"	37.73	9/16"	38.69	+9/16"	38.52			-1/2"	34.98					
	(9) STRINGER	BRG. TYPE	2HE9	2E	3HE9	2E	4HE9	2E	5HE9	2E	1C1	2E					1HE9						
	STR. SKEW X	PAD ELEV.	-1/8"	35.38	+1/16"	35.98	-1/16"	36.~~7~~75	-1/8"	37.76	+9/16"	38.82					-1/2"	34.89					
	(10) STRINGER	BRG. TYPE	2HE10	3E	3HE10	2E	4HE10	2E	5HE10	2E	1C2	2E					1HE10						
	STR. SKEW X	PAD ELEV.	-1/16"	35.29	+1/8"	35.90	0"	36.~~5~~66	-1/16"	37.71	+9/16"	38.90					-1/2"	34.79					
	(11) STRINGER	BRG. TYPE			3HE11	3E	4HE11	2E	5HE11	2E	1C3	2E											
	STR. SKEW X	PAD ELEV.			+1/4"	35.81	+1/16"	36.~~5~~58	0"	37.61	+5/8"	38.81											
	(12) STRINGER	BRG. TYPE					4HE12	3E	Continued at		Continued at												
	STR. SKEW X	PAD ELEV.					+1/8"	36.~~4~~84	right		right												

N. I. C.

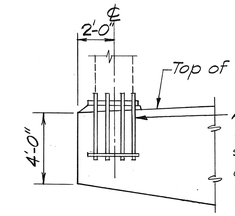

ANCHORAGE FOR OVERHEAD SIGN E-33 ON PIER HE1

CONTINUATION OF PIER HE4 UPSTA. ℄ BRGS.			
(12) STRINGER	BRG. TYPE	5HE12	2E
STR. SKEW X	PAD ELEV.	0"	37.52
(13) STRINGER	BRG. TYPE	5HE13	2E
STR. SKEW X	PAD ELEV.	+1/16"	37.43
(14) STRINGER	BRG. TYPE	5HE14	3E
STR. SKEW X	PAD ELEV.	+1/8"	37.33

CONTINUATION OF PIER HE5 UPSTA. ℄ BRGS.			
(12) STRINGER	BRG. TYPE	1C4	2E
STR. SKEW X	PAD ELEV.	+5/8"	38.72
(13) STRINGER	BRG. TYPE	1C5	2E
STR. SKEW X	PAD ELEV.	+5/8"	38.64
(14) STRINGER	BRG. TYPE	1C6	3E
STR. SKEW X	PAD ELEV.	+5/8"	38.55

NOTE:
For Notes and Definition of Str. Skew X, See Sheet No. T-11.

DATE	REVISION
4/3/84	Revised Pad Elevations at Pier HE3.

JOHN P. JOHNSON REGISTERED PROFESSIONAL ENGINEER No. 3647 HAWAII, U.S.A.

THIS WORK WAS PREPARED BY ME OR UNDER MY SUPERVISION.
John P. Johnson

STATE OF HAWAII
DEPARTMENT OF TRANSPORTATION
HIGHWAYS DIVISION
H-1 VIADUCT (E.B.), RAMP C & HOV RAMP

PIER GEOMETRY TABLE
SHEET 2 OF 3

KEEHI INTERCHANGE
F.A.I. PROJ NO. I-HI-1 (168):17
SCALE: DATE: 8/17/81

SHEET No. T-10 OF T-23 SHEETS

ORIGINAL PLAN — SURVEY PLOTTED BY / DRAWN BY H.A.M. / TRACED BY / DESIGNED BY DELL GILSTAD / QUANTITIES BY / CHECKED BY HABIB NOORATA / NOTE BOOK / No. / DATE

PRINTED ON NO. 1000H CLEARPRINT

FED. ROAD DIST. NO.	STATE	FED. AID PROJ. NO.	FISCAL YEAR	SHEET NO.	TOTAL SHEETS
HAWAII	HAW.	I-HI-I(168):17	1982	70	145

TABLE OF PIER DIMENSIONS AND ELEVATIONS

PIER NAME			HV1		HV2		HV3		HV4		HV5		HV6 (BY OTHERS)		HV0 (BY OTHERS)
PIER TYPE			I		III		III		III		III				
WORK POINT STA. OF ℄ PIER			28+66.05		29+66.21		30+66.36		31+66.52		32+63.50		33+42.33		27+65.89
SOUTH AZIMUTH OF ℄ PIER			189°-01'-23.0"		189°-01'-23.0"		189°-01'-23.0"		189°-01'-23.0"		193°-01'-18.4"		198°-36'-49.6"		189°-01'-23.0"
CAP	LENGTH OF CAP "A"		23'-4"		23'-4"		23'-4"		23'-4"		23'-4"				
CAP	DIST. ℄ BRGS. TO ℄ PIER "G"		11"		11"		11"		11"		11"				
CAP	DEPTH "V"		6'-0"		6'-0"		6'-0"		6'-0"		6'-0"				
CAP	DIMENSION "F1"	DIMENSION "F2"	2'-0 5/16"	2'-0 5/16"	2'-0 5/16"	2'-0 5/16"	2'-0 5/16"	2'-0 5/16"	2'-0 3/8"	2'-0 3/8"	2'-0 3/8"	2'-0 3/8"			
CAP	DISTANCE "Q"	DISTANCE "R"	21'-8 3/16"	1'-7 13/16"	21'-8 3/16"	1'-7 13/16"	21'-8 3/16"	1'-7 13/16"	21'-7 1/2"	1'-8 1/2"	21'-7 1/2"	1'-8 1/2"			
CAP	ELEVATION "H"	ELEVATION "J"	27.58	27.28	23.58	23.28	19.56	19.07	16.16	14.23	13.84	12.33			
COLUMN	DIMENSION "K"	DIMENSION "E"	5'-2"	—	5'-2"	—	5'-2"	—	5'-2"	—	5'-2"	—			
COLUMN	BOTTOM WIDTH "L"		3'-6"		4'-1"		4'-6"		4'-11"		5'-0"				
COLUMN	DIMENSION "M"	ELEVATION "U"	1'-9"	3.50	2'-0"	(6.5) P	—	6.5 (P)	—	6.5 (P)	—	5.5 (P)			
COLUMN	ELEVATION "S"	ELEVATION "T"	21.50	21.36	17.50	17.37	13.43	13.22	9.82	9.40	7.42	6.75			
STRINGER SPACING DISTANCE MEASURED ALONG ℄ PIER	DOWN STA. 1	UP STA. 1	6'-5 1/8"	6'-5 1/8"	6'-5 1/8"	6'-5 1/8"	6'-5 1/8"	6'-5 1/8"	5'-11"	5'-11"	5'-11"	5'-11"	6'-1"		6'-5 1/8"
	DOWN STA. 2	UP STA. 2	↕	↕	↕	↕	↕	↕	↕	↕	↕	↕	↕		↕
	DOWN STA. 3	UP STA. 3	↕	↕	↕	↕	↕	↕	↕	↕	↕	↕	↕		↕
	DOWN STA. 4	UP STA. 4	6'-5 1/8"	6'-5 1/8"	6'-5 1/8"	6'-5 1/8"	6'-5 1/8"	6'-5 1/8"	5'-11"	5'-11"	5'-11"	5'-11"	6'-1"		6'-5 1/8"
	DOWN STA. 5	UP STA. 5													
	DOWN STA. 6	UP STA. 6													
	DOWN STA. 7	UP STA. 7													
	DOWN STA. 8	UP STA. 8													
	DOWN STA. 9	UP STA. 9													
	DOWN STA. 10	UP STA. 10													
	DOWN STA. 11	UP STA. 11													
	DOWN STA. 12	UP STA. 12													
	DOWN STA. 13	UP STA. 13													
	DOWN STA. 14	UP STA. 14													
DOWN STATION BRGS.	(1) STRINGER	BRG. TYPE	1HV1	3H	2HV1	3H	3HV1	3H	4HV1	3H	5HV1	3H	6HV1		
	STR. SKEW X	PAD ELEV.	-11/16"	28.07	-11/16"	23.94	-11/16"	20.08	-11/16"	16.63	-11/16"	14.11	-9/16"	13.17	
	(2) STRINGER	BRG. TYPE	1HV2	2H	2HV2	2H	3HV2	2H	4HV2	2H	5HV2	2H	6HV2		
	STR. SKEW X	PAD ELEV.	-11/16"	27.98	-11/16"	23.86	-11/16"	19.95	-3/4"	16.33	-11/16"	13.72	-9/16	12.78	
	(3) STRINGER	BRG. TYPE	1HV3	2H	2HV3	2H	3HV3	2H	4HV3	2H	5HV3	2H	6HV3		
	STR. SKEW X	PAD ELEV.	-11/16"	27.90	-11/16"	23.78	-11/16"	19.82	-13/16"	16.02	-11/16"	13.34	-1/2"	12.38	
	(4) STRINGER	BRG. TYPE	1HV4	3H	2HV4	3H	3HV4	3H	4HV4	3H	5HV4	3H	6HV4		
	STR. SKEW X	PAD ELEV.	-11/16"	27.82	-11/16"	23.69	-11/16"	19.69	-7/8"	15.71	-11/16"	12.96	-1/2"	11.99	
	(5) STRINGER	BRG. TYPE													
	STR. SKEW X	PAD ELEV.													
	(6) STRINGER	BRG. TYPE													
	STR. SKEW X	PAD ELEV.													
	(7) STRINGER	BRG. TYPE													
	STR. SKEW X	PAD ELEV.													
	(8) STRINGER	BRG. TYPE													
	STR. SKEW X	PAD ELEV.													
	(9) STRINGER	BRG. TYPE													
	STR. SKEW X	PAD ELEV.													
	(10) STRINGER	BRG. TYPE													
	STR. SKEW X	PAD ELEV.													
	(11) STRINGER	BRG. TYPE													
	STR. SKEW X	PAD ELEV.													
	(12) STRINGER	BRG. TYPE													
	STR. SKEW X	PAD ELEV.													
	(13) STRINGER	BRG. TYPE													
	STR. SKEW X	PAD ELEV.													
	(14) STRINGER	BRG. TYPE													
	STR. SKEW X	PAD ELEV.													
UP STATION BRGS.	(1) STRINGER	BRG. TYPE	2HV1	3E	3HV1	3E	4HV1	3E	5HV1	3E	6HV1	3E	7HV1	3E	1HV1
	STR. SKEW X	PAD ELEV.	-11/16"	27.87	-11/16"	23.87	-11/16"	19.84	+3/16"	16.43	+9/16"	14.28	+9/16"	13.22	-11/16" 31.35
	(2) STRINGER	BRG. TYPE	2HV2	2E	3HV2	2E	4HV2	2E	5HV2	2E	6HV2	2E	7HV2	2E	1HV2
	STR. SKEW X	PAD ELEV.	-11/16"	27.79	-11/16"	23.78	-3/4"	19.70	+3/16"	16.12	+5/8"	13.90	+9/16"	12.83	-11/16" 31.26
	(3) STRINGER	BRG. TYPE	2HV3	2E	3HV3	2E	4HV3	2E	5HV3	2E	6HV3	2E	7HV3	2E	1HV3
	STR. SKEW X	PAD ELEV.	-11/16"	27.71	-11/16"	23.70	-13/16"	19.57	+3/16"	15.81	+5/8"	13.51	+9/16"	12.43	-11/16" 31.17
	(4) STRINGER	BRG. TYPE	2HV4	3E	3HV4	3E	4HV4	3E	5HV4	3E	6HV4	3E	7HV4	3E	1HV4
	STR. SKEW X	PAD ELEV.	-11/16"	27.62	-11/16"	23.62	-7/8"	19.44	+3/16"	15.50	+5/8"	13.13	+9/16"	12.03	-11/16" 31.09
	(5) STRINGER	BRG. TYPE													
	STR. SKEW X	PAD ELEV.													
	(6) STRINGER	BRG. TYPE													
	STR. SKEW X	PAD ELEV.													
	(7) STRINGER	BRG. TYPE													
	STR. SKEW X	PAD ELEV.													
	(8) STRINGER	BRG. TYPE													
	STR. SKEW X	PAD ELEV.													
	(9) STRINGER	BRG. TYPE													
	STR. SKEW X	PAD ELEV.													
	(10) STRINGER	BRG. TYPE													
	STR. SKEW X	PAD ELEV.													
	(11) STRINGER	BRG. TYPE													
	STR. SKEW X	PAD ELEV.													
	(12) STRINGER	BRG. TYPE													
	STR. SKEW X	PAD ELEV.													

N.I.C.

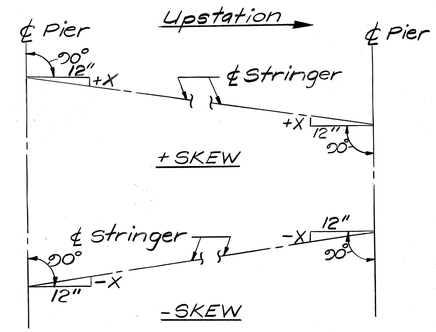

STRINGER SKEW X

NOTES:

1. (P) indicates that Elevation is given at top of column pedestal. For details, see Sheet No. T-9.
2. The words 'Beam' and 'Stringer' are used interchangeably.
3. Pad Elevations shown in Table are Concrete Seat Elevations.

JOHN P. JOHNSON REGISTERED PROFESSIONAL ENGINEER No. 3647 HAWAII, U.S.A.

THIS WORK WAS PREPARED BY ME OR UNDER MY SUPERVISION.

John P. Johnson

STATE OF HAWAII
DEPARTMENT OF TRANSPORTATION
HIGHWAYS DIVISION

H-1 VIADUCT (E.B.), RAMP C & HOV RAMP

PIER GEOMETRY TABLE
SHEET 3 OF 3

KEEHI INTERCHANGE
F.A.I. PROJ NO. I-HI-I (168):17

SCALE: —— DATE: 8/17/81

SHEET No. T-11 OF T-23 SHEETS

ORIGINAL PLANS | SURVEY PLOTTED BY | DRAWN BY | TRACED BY | DESIGNED BY DREW GILSTAD | QUANTITIES BY | CHECKED BY HABIB NOORATA | DATE | NOTE BOOK | No.

PRINTED ON NO. 1000H CLEARPRINT

FED. ROAD DIST. NO.	STATE	FED. AID PROJ. NO.	FISCAL YEAR	SHEET NO.	TOTAL SHEETS
HAWAII	HAW.	I-HI-I(168)-17	1982	71	145

REINFORCEMENT SCHEDULE

PIER NAME		NW1				NW2				NW3				NW4				NW5				NW6			
DESCRIPTION		SIZE	NO.	SPG.	LENGTH	SIZE	NO.	SPG.	LENGTH	SIZE	NO.	SPG.	LENGTH	SIZE	NO.	SPG.	LENGTH	SIZE	NO.	SPG.	LENGTH	SIZE	NO.	SPG.	LENGTH
CAP MAIN BARS	a Bar	14S	12*	—	—	14S	12*	—	—	14S	12*	—	—	14S	12*	—	—	14S	12*	—	—	14S	12*	—	—
	a1 "	14S	12*	—	46'-6"	14S	12*	—	46'-6"	14S	12*	—	46'-6"	14S	12*	—	45'-6"	14S	12*	—	52'-6"	14S	12*	—	52'-6"
	b "	14S	4	—	37'-6"	14S	4	—	37'-6"	14S	4	—	37'-6"	14S	4	—	36'-6"	14S	2	—	36'-6"	14S	2	—	36'-6"
	d "	7	6	—	11'-0"	7	6	—	11'-0"	7	6	—	11'-0"	7	6	—	11'-0"								
CAP-OTHER BARS	e "	7	12	—	—	7	12	—	—	7	12	—	—	7	12	—	—	6	12	—	—				
	f "	5	12	—	—	5	12	—	—	5	12	—	—	5	12	—	—	5	12	—	—	5	12	—	—
	g "	5	8	—	—	5	8	—	—	5	8	—	—	5	8	—	—	5	8	—	—	5	8	—	—
	h "	7	14	—	—	7	14	—	—	7	14	—	—	7	14	—	—	6	14	—	—	6	14	—	—
	h1 "																								
	h2 "																								
	j "																	5	54	12"	—	5	54	12"	—
	j1 "	6	246	6"	—	6	246	6"	—	6	246	6"	—	6	246	6"	—	5	102	8"	—	5	102	8"	—
	j2 "	6	12	12"	—	6	12	12"	—	6	12	12"	—	6	12	12"	—								
	j3 "																								
	l																								
COL. REINF.	m "	11	2x36	—	—	11	2x36	—	—	11	2x38	—	—	11	2x36	—	—	9	48	—	—	9	48	—	—
FOOTING REINF.	r "	11	64*	—	—	11	64*	—	—	8	31	—	—	8	31	—	—	9	29	—	—	8	29	—	—
	s "	9	62	—	—	9	62	—	—	10	57	—	—	10	57	—	—	8	53	—	—	8	55	—	—
	u "	5	18	—	—	5	18	—	—	5	24	—	—	5	24	—	—	5	18	—	—	5	18	—	—
	v "	5	37	—	—	5	37	—	—	5	31	—	—	5	31	—	—	5	37	—	—	5	31	—	—
PEDESTAL REINF.	w "	—	—	—	—	—	—	—	—	8	88	—	—	8	88	—	—	8	88	—	—	—	—	—	—

PIER NAME		HE1				HE2				HE3				HE4				HE5			
DESCRIPTION		SIZE	NO.	SPG.	LENGTH	SIZE	NO.	SPG.	LENGTH	SIZE	NO.	SPG.	LENGTH	SIZE	NO.	SPG.	LENGTH	SIZE	NO.	SPG.	LENGTH
CAP MAIN BARS	a Bar	14S	12*	—	—	14S	12*	—	—	14S	12*	—	—	14S	12*	—	—	14S	12*	—	—
	a1 "	14S	12*	—	55'-0"	14S	12*	—	49'-0"	14S	12*	—	49'-6"	14S	12*	—	54'-6"	14S	12*	—	60'-0"
	b "	14S	4	—	46'-0"	14S	4	—	40'-0"	14S	6	—	43'-6"	14S	6	—	48'-6"	14S	6	—	54'-6"
	d "	7	6	—	11'-0"	7	6	—	11'-0"	7	6	—	15'-0"	7	6	—	16'-0"	7	6	—	18'-0"
CAP-OTHER BARS	e "	7	12	—	—	7	12	—	—	7	12	—	—	7	12	—	—	7	12	—	—
	f "	7	12	—	—	5	12	—	—	5	12	—	—	5	12	—	—	5	12	—	—
	g "	7	8	—	—	5	8	—	—	5	8	—	—	5	8	—	—	5	8	—	—
	h "	7	14	—	—	7	14	—	—	7	14	—	—	7	14	—	—	7	14	—	—
	h1 "																				
	h2 "																				
	j "									6	42	12"	—	6	42	12"	—	6	42	12"	—
	j1 "	6	276	6"	—	6	246	6"	—	6	150	6"	—	6	150	6"	—	6	150	6"	—
	j2 "	6	9	12"	—	6	9	12"	—	6	24	12"	—	6	27	12"	—	6	33	12"	—
	j3 "																				
	l																				
COL. REINF.	m "	14S	2x36	—	—	14S	2x36	—	—	11	2x40	—	—	11	2x40	—	—	11	2x40	—	—
FOOTING REINF.	r "	11	62*	—	—	10	31	—	—	9	32	—	—	9	40	—	—	9	40	—	—
	s "	10	55	—	—	9	49	—	—	11	68	—	—	11	72	—	—	11	72	—	—
	u "	5	20	—	—	5	18	—	—	5	24	—	—	5	24	—	—	5	24	—	—
	v "	5	37	—	—	5	37	—	—	5	37	—	—	5	44	—	—	5	44	—	—
PEDESTAL REINF.	w "	—	—	—	—	8	142	—	—	8	142	—	—	8	152	—	—	8	166	—	—

N. I. C.

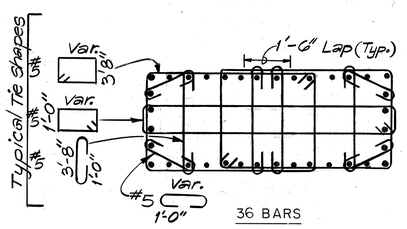

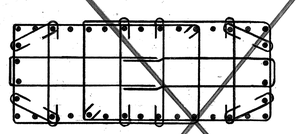

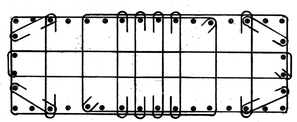

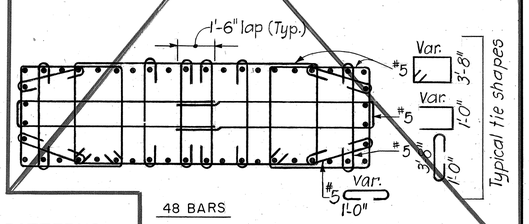

COLUMN TIE PATTERNS
N.T.S.

N. I. C.

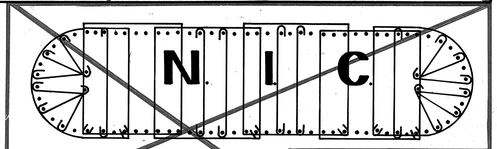

PEDESTAL TIE PATTERNS
N.T.S.

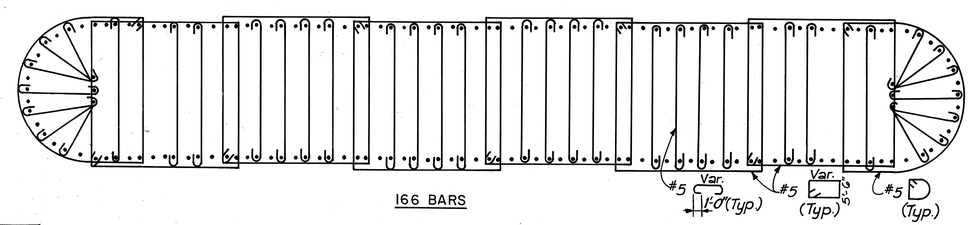

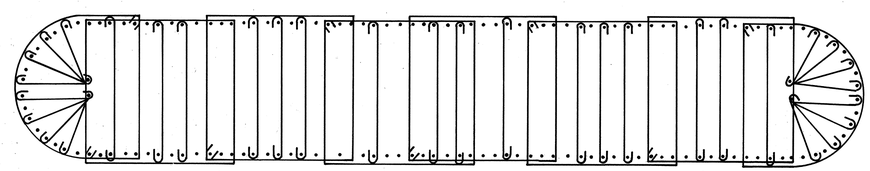

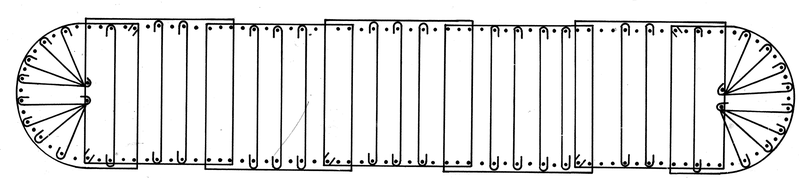

NOTES :

1. Number of bars is total for one Pier.
2. * Indicates bars to be placed in bundles of two. (~~oo~~)
3. — Indicates as required (See Pier Details.)
4. Reinforcement Steel : ASTM A615.
   a) Cap Main Bars are:
      Grade 40 for piers HV1 thru HV5.
      Grade 60 for all other piers.
   b) Other Bars in Cap, Column, Pedestal and Footing are Grade 40 for all piers.

JOHN P. JOHNSON
REGISTERED PROFESSIONAL ENGINEER
No. 3647
HAWAII, U.S.A.

THIS WORK WAS PREPARED BY ME OR UNDER MY SUPERVISION.

STATE OF HAWAII
DEPARTMENT OF TRANSPORTATION
HIGHWAYS DIVISION

H-I VIADUCT (E.B.), RAMP C & HOV RAMP

PIER REINFORCEMENT SCHEDULE
SHEET 1 OF 2
KEEHI INTERCHANGE
F.A.I. PROJ. NO. I-HI-I (168)-17

SCALE: —— DATE: 8/17/81

SHEET No. T-12 OF T-23 SHEETS

ORIGINAL PLAN | NOTE BOOK | NO. | SURVEY PLOTTED BY | DRAWN BY: PATRICIA MALKIN | TRACED BY | DESIGNED BY: DRELLI G. LISTAD | QUANTITIES BY | CHECKED BY | DATE

FED. ROAD DIST. NO.	STATE	FED. AID PROJ. NO.	FISCAL YEAR	SHEET NO.	TOTAL SHEETS
HAWAII	HAW.	I-HI-1(168):17	1982	72	145

REINFORCEMENT SCHEDULE

PIER NAME		HV1				HV2				HV3				HV4				HV5							
DESCRIPTION		SIZE	NO.	SPG.	LENGTH	SIZE	NO.	SPG.	LENGTH	SIZE	NO.	SPG.	LENGTH	SIZE	NO.	SPG.	LENGTH	SIZE	NO.	SPG.	LENGTH	SIZE	NO.	SPG.	LENGTH
CAP MAIN BARS	a Bar	9	12*	—	—	9	12*	—	—	9	12*	—	—	9	12*	—	—	9	12*	—	—				
	a1 "																								
	b "																								
	d "																								
CAP-OTHER BARS	e "	5	12	—	—	5	12	—	—	5	12	—	—	5	12	—	—	5	12	—	—				
	f "	5	12	—	—	5	12	—	—	5	12	—	—	5	12	—	—	5	12	—	—				
	g "	5	8	—	—	5	8	—	—	5	8	—	—	5	8	—	—	5	8	—	—				
	h "	5	12	—	—	5	12	—	—	5	12	—	—	5	12	—	—	5	12	—	—				
	h1 "																								
	h2 "																								
	j "																								
	j1 "	5	42	12"	—	5	42	12"	—	5	42	12"	—	5	42	12"	—	5	42	12"	—				
	j2 "																								
	j3 "																								
	l "																								
COL. REINF.	m "	11	26	—	—	8	38	—	—	8	46	—	—	8	46	—	—	6	46	—					
FOOTING REINF.	q "																								
	r "	9	23	—		5	18	—		5	24	—		5	24	—		5	24	—					
	s "	9	32	—		9	24	—		10	32	—		10	32	—		10	32	—					
	t "																								
	u "	5	18	—		5	18	—		5	24	—		5	24	—		5	24	—					
	v "	5	18	—		5	18	—		5	18	—		5	18	—		5	18	—					
PEDESTAL REINF.	w "					8	60	—	—	8	60	—	—	8	60	—	—	8	60	—					

NOTE:

For Notes see Sheet No. T-12.

** Indicates bars to be placed in bundles of two. (~~oo~~)*

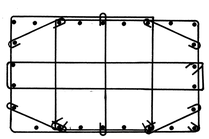

26 BARS

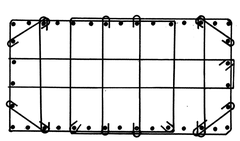

38 BARS

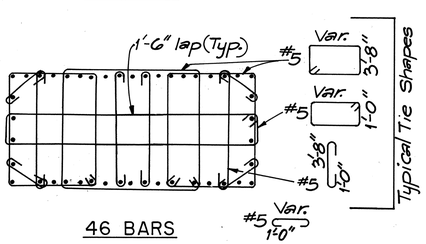

46 BARS

COLUMN TIE PATTERNS

N.T.S.

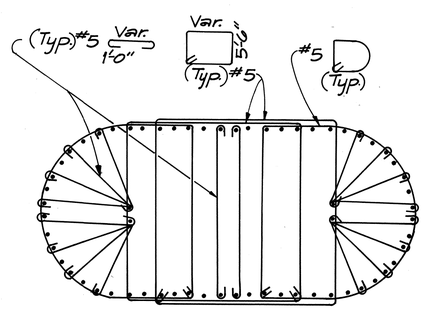

60 BARS

PEDESTAL TIE PATTERNS

N.T.S.

ORIGINAL PLAN	SURVEY PLOTTED BY	DATE
	DRAWN BY	
	TRACED BY	
NOTE BOOK	DESIGNED BY	
	QUANTITIES BY	
No.	CHECKED BY	

THIS WORK WAS PREPARED BY ME OR UNDER MY SUPERVISION.

JOHN P. JOHNSON REGISTERED PROFESSIONAL ENGINEER No. 3647 HAWAII, U.S.A.

STATE OF HAWAII
DEPARTMENT OF TRANSPORTATION
LAND TRANSPORTATION FACILITIES DIVISION
H-1 VIADUCT (E.B.), RAMP C & HOV RAMP

PIER REINFORCEMENT SCHEDULE
SHEET 2 OF 2
KEEHI INTERCHANGE
F.A.I. PROJ. NO. I-HI-1(168):17

SCALE: —— DATE: 8/17/81

SHEET No. T-13 OF T-23 SHEETS

FED. ROAD DIST. NO.	STATE	FED. AID PROJ. NO.	FISCAL YEAR	SHEET NO.	TOTAL SHEETS
HAWAII	HAW.	I-HI-1(168)-17	1982	73	145

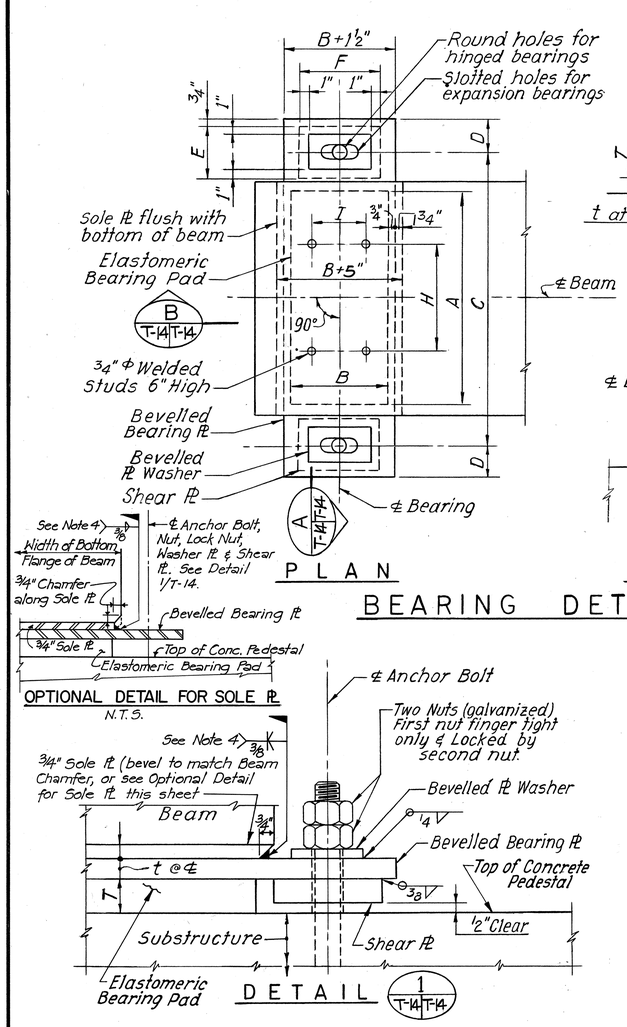

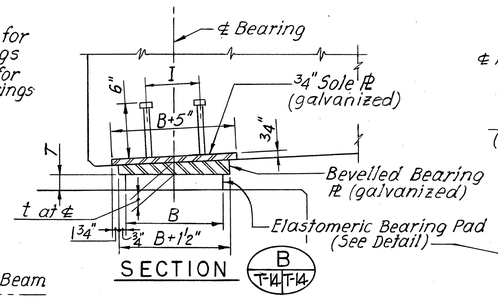

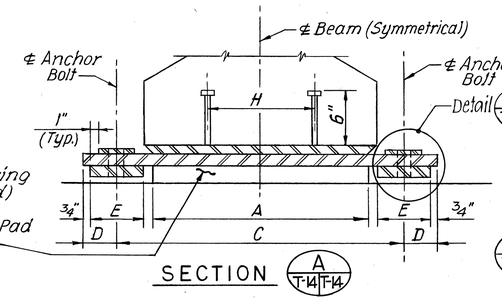

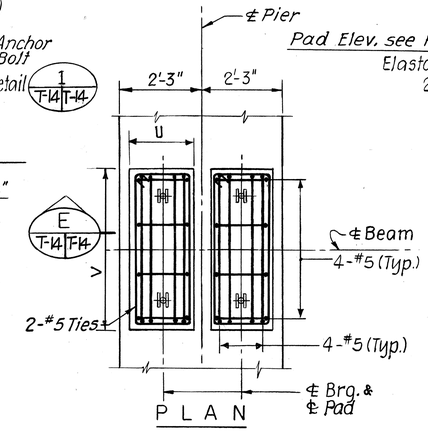

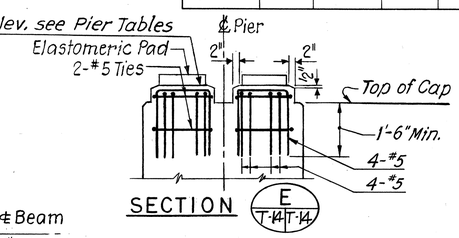

CONCRETE PAD DIMENSIONS		
BEARING TYPE	U	V
1H & E	1'-7"	4'-3"
2H & E	1'-2"	3'-10"
3H & E	1'-5"	3'-5"
6H & E	1'-2"	3'-2"

CONCRETE PAD DETAILS

Shown for 0° Skew Angle.

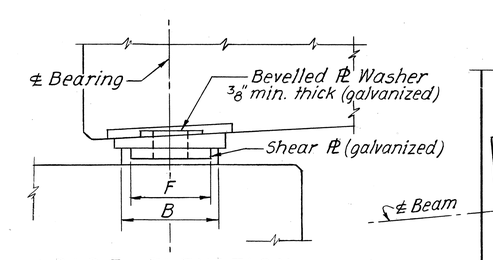

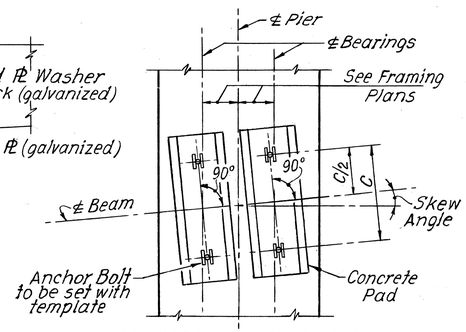

BEARING DETAILS

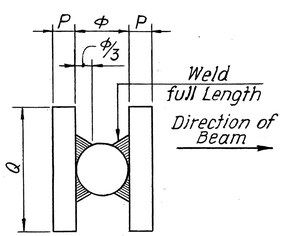

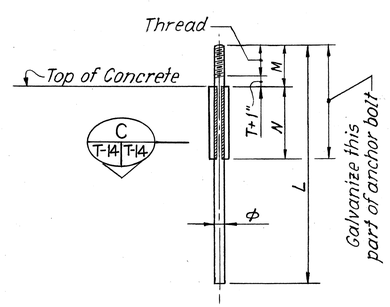

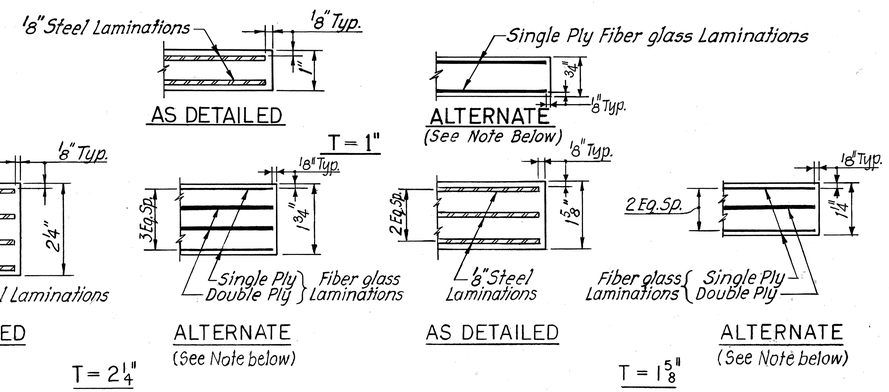

ELASTOMERIC BEARING PAD DETAILS

BEARING AND ANCHOR BOLT TABLE

BEARING TYPE	ELASTOMERIC BEARING PAD A	B	T	STEEL DIMENSIONS C	D	E	F	t	STUD SPACING H	I	ANCHOR BOLT HOLES HINGED BRGS.	EXP. BRGS.	ANCHOR BOLT Φ	L	M	ANCHOR PLATES N	Q	P
2H / 2E	24"	8"	1⅝"	32"	3¾"	6"	8"	See beam table on Sh. No. T-17	12"	6"	1¾"Φ / —	— / 1¾"×4"	1½"	33"	9"	8"	4"	⅝"
3H / 3E	19"	12"	1⅝"	27"	3¾"	6"	8"		8"	6"	2"Φ / —	— / 2"×4"	1¾"	39"	9"	8"	4½"	⅝"
6H / 6E	16"	8"	1"	24"	3¾"	6"	7"		8"	6"	1½"Φ / —	— / 1½"×3"	1¼"	32"	8"	6"	3"	½"
1H / 1E	24"	14"	2¼"	33"	4¼"	7"	10"		12"	9"	2¼"Φ / —	— / 2¼"×5"	2"	45"	10"	9"	5"	¾"

NOTES:

1. Elastomeric Bearing Pads, Anchor Bolts and Bevelled Bearing Pl's are incidental to concrete in Bridges.
2. Sole Pl's and Welded Studs are incidental to beams.
3. Durometer harness of Elastomeric Pad shall be 60±5.
4. The Contractor shall minimize and dissipate the heat generated during the field welding of the ¾" sole plate to the bevelled bearing plate and during the field galvanizing of the weld. The Contractor shall take all necessary precautions to avoid burning the elastomeric bearing pad during welding & galvanizing. Welding of the sole plate to the bearing plate shall be done prior to the pouring of diaphragm and deck. Temporary wooden shims (A×B×¾" min. thickness) shall be placed between the beveled bearing plates & the elastomeric bearing pads during field welding and galvanizing. Shims shall be removed.

FIBER GLASS LAMINATED PADS

All bearing seat elevations (Denoted also as bush hammer or pad elevations) are based on steel laminated elastomeric bearing pads. If the contractor elects to use fiber glass laminated elastomeric pads, instead of steel laminated elastomeric pads, he shall comply with the following requirements:

a. The fiber glass laminated elastomeric pads shall comply with the details shown on the plans and the requirements of the Special Provisions.

b. Appropriate revisions shall be made to the bearing seat elevations and Shear Pl to reflect the reduction in thickness for the fiber glass laminated bearing pads. Any such revisions shall be approved by the engineer.

DATE	REVISION
11-3-82	Revised note and welding symbol of Sole Pl on Detail 1 T-14 T-14. Added Optional Detail for Sole Pl.

JOHN P. JOHNSON REGISTERED PROFESSIONAL ENGINEER No. 3647 HAWAII, U.S.A.

THIS WORK WAS PREPARED BY ME OR UNDER MY SUPERVISION.

John P. Johnson

STATE OF HAWAII
DEPARTMENT OF TRANSPORTATION
HIGHWAYS DIVISION

H-1 VIADUCT (E.B.), RAMP C & HOV RAMP

BEARING DETAILS

KEEHI INTERCHANGE
F.A.I. PROJ. NO. I-HI-1 (168):17

SCALE: N.T.S. DATE: 8/17/81

SHEET No. T-14 OF T-23 SHEETS

ORIGINAL PLAN — SURVEY PLOTTED BY — DRAWN BY — TRACED BY — DESIGNED BY DREW GILSTAD — QUANTITIES BY — CHECKED BY — DATE — NOTE BOOK — No.

ADD. 73

FED. ROAD DIST. NO.	STATE	FED. AID PROJ. NO.	FISCAL YEAR	SHEET NO.	TOTAL SHEETS
HAWAII	HAW.	I-HI-I(168):17	1982	74	145

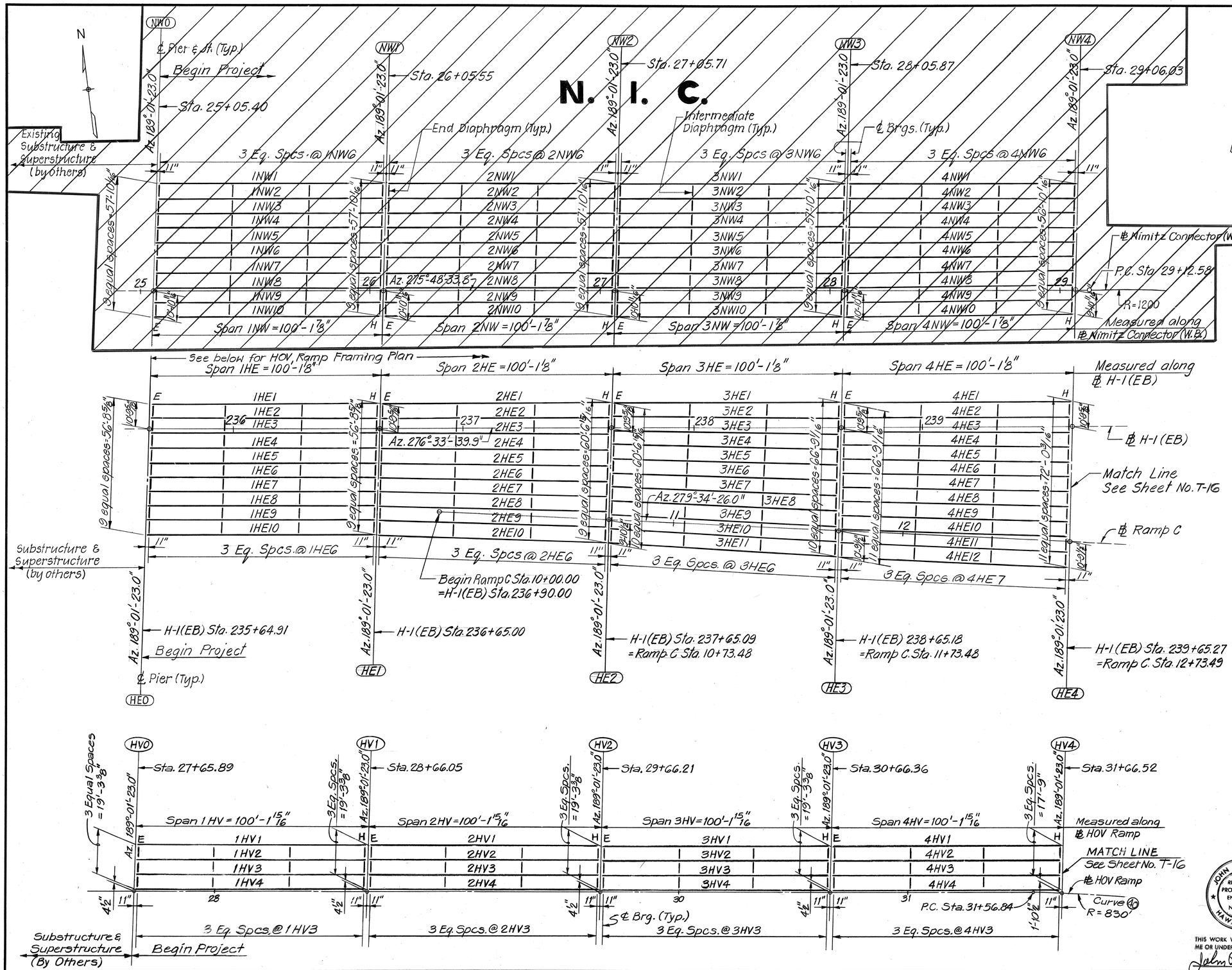

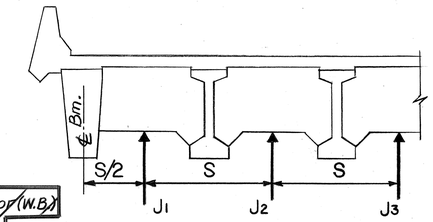

TYPICAL FUTURE JACKING DIAGRAM

N.T.S. (NOT IN CONTRACT)

LEGEND: J = Jacking Force
S = Beam Spacing

Note: Place jacks under the end diaphragms as shown above for any lifting of the superstructure.

NOTES:

1. All Azimuths are measured from the South.
2. The ℄s of the Bearings are parallel to the ℄s of the Piers.
3. Diaphragms shall be parallel to downstation Pier unless noted.

LEGEND:

H = Hinge Bearings
E = Expansion Bearings

SURVEY PLOTTED BY		DATE
DRAWN BY	A.A.H.	
TRACED BY		
DESIGNED BY	T. SAKER	
QUANTITIES BY		
CHECKED BY		

ORIGINAL PLAN — NOTE BOOK — No.

JOHN P. JOHNSON REGISTERED PROFESSIONAL ENGINEER No. 3647 HAWAII, U.S.A.

THIS WORK WAS PREPARED BY ME OR UNDER MY SUPERVISION.

STATE OF HAWAII
DEPARTMENT OF TRANSPORTATION
HIGHWAYS DIVISION

H-1 VIADUCT (E.B.), RAMP C & HOV RAMP

FRAMING PLAN
SHEET 1 OF 2

KEEHI INTERCHANGE
F.A.I. PROJ. NO. I-HI-1 (168):17

SCALE: 1" = 20'-0" DATE: 8/17/81

SHEET No. T-15 OF T-23 SHEETS

FED. ROAD DIST. NO.	STATE	FED. AID PROJ. NO.	FISCAL YEAR	SHEET NO.	TOTAL SHEETS
HAWAII	HAW.	I-HI-I(168):17	1982	75	145

⊥ Diaphragms shall be normal to indicated stringer

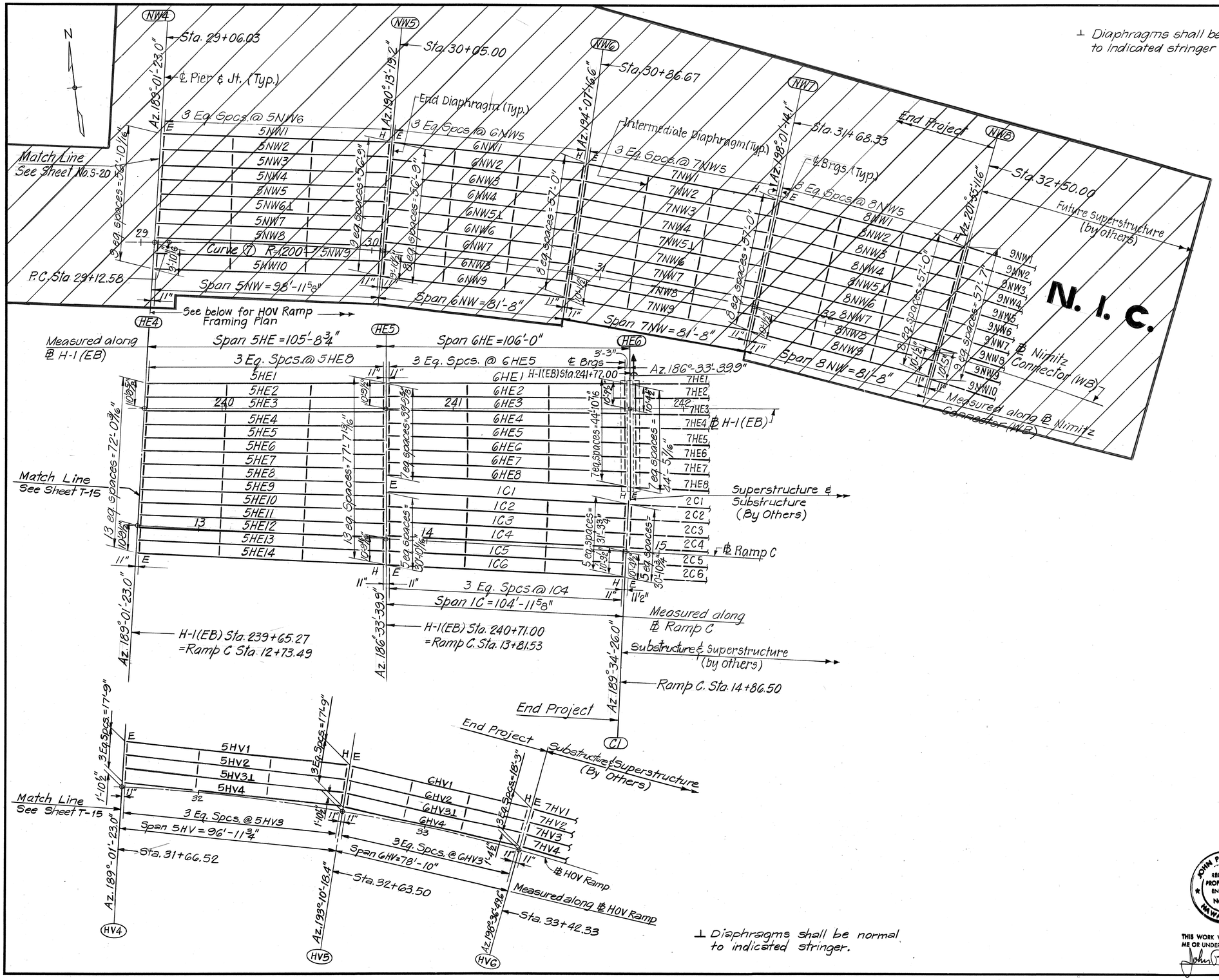

⊥ Diaphragms shall be normal to indicated stringer.

NOTES:

1. For Notes & Legend see Sheet No. T-15.
2. For Future Jacking Diagram see sheet No. T-15.

ORIGINAL PLAN		DATE
	SURVEY PLOTTED BY	
	TRACED BY H.A. M.	
	DESIGNED BY H. SAXER	
NOTE BOOK	QUANTITIES BY	
No.	CHECKED BY	

JOHN P. JOHNSON REGISTERED PROFESSIONAL ENGINEER No. 3647 HAWAII, U.S.A.

THIS WORK WAS PREPARED BY ME OR UNDER MY SUPERVISION.

STATE OF HAWAII
DEPARTMENT OF TRANSPORTATION
HIGHWAYS DIVISION

H-1 VIADUCT (E.B.), RAMP C & HOV RAMP

FRAMING PLAN
SHEET 2 OF 2

KEEHI INTERCHANGE
F.A.I. PROJ. NO. I-HI-I (168):17
SCALE: 1" = 20'-0" DATE: 8/17/81

SHEET No. T-16 OF T-23 SHEETS

FED. ROAD DIST. NO.	STATE	FED. AID PROJ. NO.	FISCAL YEAR	SHEET NO.	TOTAL SHEETS
HAWAII	HAW.	I-HI-I(168)17	1982	76	145

BEAM MARK	LGTH. ℄ TO ℄ BRG.	t1	t2	BEVEL	BEAM TYPE
1NW1	98.32	1¼"	1¼"	-⅜:12	IVF-A
2				-⅜:12	IV-A
3				-⅜:12	
4				-3/16:12	
5					
6					
7					
8				-3/16:12	
9				-¼:12	IV-A
1NW10	98.32	1¼"	1¼"	-¼:12	IVF-A
2NW1	98.32	1¼"	1¼"	-3/16:12	IVF-A
2					IV-A
3					
4				-3/16:12	
5				-¼:12	
6					
7					
8					
9					IV-A
2NW10	98.32	1¼"	1¼"	-¼:12	IVF-A
3NW1	98.32	1¼"	1¼"	-¼:12	IVF-A
2					IV-A
3					
4				-¼:12	
5				-5/16:12	
6					
7					
8					
9				-5/16:12	IV-A
3NW10	98.32	1¼"	1¼"	-⅜:12	IVF-A
4NW1	98.32	1¼"	1¼"	-5/16:12	IVF-A
2	98.33				IV-A
3	98.33				
4	98.34				
5	98.35			-5/16:12	
6	98.35			-⅜:12	
7	98.36				
8	98.37				
9	98.37				IV-A
4NW10	98.38	1¼"	1¼"	-⅜:12	IVF-A
5NW1	98.09	1¼"	1¼"	-¼:12	IVF-A
2	97.96			-5/16:12	IV-A
3	97.83				
4	97.70				
5	97.56			-5/16:12	
6	97.43			-⅜:12	
7	97.30				
8	97.17				
9	97.04				IV-A
5NW10	96.91	1¼"	1¼"	-⅜:12	IVF-A
6NW1	83.01	1¼"	1¼"	-5/16:12	IVF-D
2	82.52				IV-E
3	82.04				
4	81.55			-5/16:12	
5	81.07			-⅜:12	
6	80.59				
7	80.10				
8	79.62				IV-E
6NW9	79.14	1¼"	1¼"	-⅜:12	IVF-D
7NW1	83.01	1¼"	1¼"	-5/16:12	IVF-D
2	82.52				IV-E
3	82.04				
4	81.55			-5/16:12	
5	81.07			-5/16:12	
6	80.58				
7	80.10				
8	79.61				IV-E
7NW9	79.13	1¼"	1¼"	-⅜:12	IVF-D
8NW1	83.01	1¼"	1¼"	-5/16:12	IVF-D
2	82.52				IV-E
3	82.04				
4	81.55				
5	81.07				
6	80.58				
7	80.10				
8	79.61				IV-E
8NW9	79.13	1¼"	1¼"	-5/16:12	IVF-D

BEAM MARK	LGTH. ℄ TO ℄ BRG.	t1	t2	BEVEL	BEAM TYPE
1HE1	98.26	1¼"	1¼"	+1/16:12	IVF-A
2					IV-A
3					
4					
5					
6					
7					
8					
9					IV-A
1HE10	98.26	1¼"	1¼"	+1/16:12	IVF-A
2HE1	98.26	1¼"	1¼"	+1/16:12	IVF-A
2	98.24				IV-A
3	98.22				
4	98.21				
5	98.20				
6	98.19				
7	98.18				
8	98.17				
9	98.17				IV-A
2HE10	98.17	1¼"	1¼"	+1/16:12	IVF-A
3HE1	98.26	1¼"	1¼"	+1/16:12	IVF-A
2	98.23				IV-A
3	98.21				
4	98.20				
5	98.18				
6	98.17				
7	98.17				
8	98.17				
9	98.17				
10	98.17				IV-A
3HE11	98.18	1¼"	1¼"	+1/16:12	IVF-A
4HE1	98.26	1¼"	1¼"	+1/16:12	IVF-A
2	98.24			+1/16:12	IV-A
3	98.22				
4	98.21				
5	98.19				
6	98.18				
7	98.18			+1/16:12	
8	98.17			+⅛:12	
9	98.17				
10	98.17				
11	98.17				IV-A
4HE12	98.17	1¼"	1¼"	+⅛:12	IVF-A
5HE1	103.43	1¼"	1¼"	+1/16:12	IVF-L
2	103.67			+1/16:12	IV-M
3	103.91				
4	104.15				
5	104.39				
6	104.64			+1/16:12	
7	104.89			+⅛:12	
8	105.14				
9	105.39				
10	105.64				
11	105.90				
12	106.15				
13	106.41				IV-M
5HE14	106.67	1¼"	1¼"	+⅛:12	IVF-L
6HE1	101.83	1¼"	1¼"	+1/16:12	IVF-L
2	101.84			+1/16:12	IV-M
3	101.84			+1/16:12	
4	101.85				
5	101.87				
6	101.89			+1/16:12	
7	101.92			+⅛:12	
6HE8	101.95	1¼"	1¼"	+⅛:12	IV-M
1C1	104.19	1¼"	1¼"	+⅛:12	IV-M
2	103.87				
3	103.54				
4	103.22				
5	102.89				IV-M
1C6	102.57	1¼"	1¼"	+⅛:12	IVF-L

BEAM MARK	LGTH. ℄ TO ℄ BRG.	t1	t2	BEVEL	BEAM TYPE
1HV1	98.32	1¼"	1¼"	-⅜:12	IVF-A
2	98.32			-⅜:12	IV-A
3	98.32			-⅜:12	IV-A
1HV4	98.32			-⅜:12	IVF-A
2HV1	98.32	1¼"		-½:12	IVF-A
2	98.32				IV-A
3	98.32				IV-A
2HV4	98.32				IVF-A
3HV1	98.32				IVF-A
2	98.32				IV-A
3	98.32				IV-A
3HV4	98.32	1¼"	1¼"	-½:12	IVF-A
4HV1	98.32	1¼"	1¼"	-⅜:12	IVF-A
2	98.35			-7/16:12	IV-A
3	98.38			-7/16:12	IV-A
4HV4	98.41			-7/16:12	IVF-A
5HV1	96.51			-5/16:12	IVF-C
2	96.08			-5/16:12	IV-A
3	95.65			-5/16:12	IV-A
5HV4	95.22	1¼"	1¼"	-5/16:12	IVF-C
6HV1	78.82			-3/16:12	IVF-D
2	78.26			-3/16:12	IV-H
3	77.69			-3/16:12	IV-H
6HV4	77.12	1¼"	1¼"	-3/16:12	IVF-D

BEAM MARK	LGTH. ℄ TO ℄ BRG.	t1	t2	BEVEL	BEAM TYPE

BEAM MARK	LGTH. ℄ TO ℄ BRG.	t1	t2	BEAM TYPE

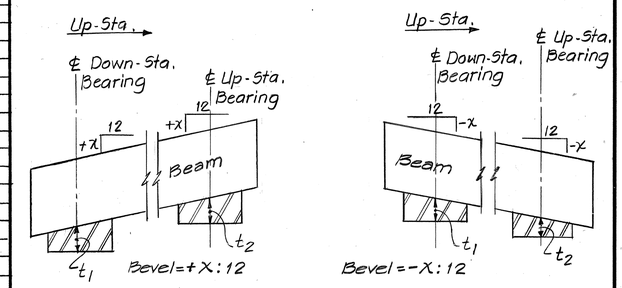

BEARING PLATE BEVEL
N.T.S.

PRESTRESSED CONCRETE GIRDERS WILL BE FURNISHED BY OTHERS

NOTES:

1. t1 is the bearing plate thickness at the downstation bearing.
   t2 is the bearing plate thickness at the upstation bearing.
2. For bearing types, see Sheets No. T-10 & T-11.
3. For bearing details, see Sheet No. T-14.
4. Beam lengths have been determined along level lines.
5. For the conditions where bevels are ¼":12" or less, the contractor has the option to use bearing plates of uniform thickness of "t1" or "t2" specified in Table this sheet. In these instances, the concrete seats shall be bevelled to compensate for the bearing plates being of uniform thickness.

ORIGINAL PLAN
SURVEY PLOTTED BY
DRAWN BY PATRICIA MALKIN
TRACED BY
DESIGNED BY HABIB NOORATA
QUANTITIES BY
CHECKED BY
DATE
NOTE BOOK No.

JOHN P. JOHNSON REGISTERED PROFESSIONAL ENGINEER No. 3647 HAWAII, U.S.A.

THIS WORK WAS PREPARED BY ME OR UNDER MY SUPERVISION.

STATE OF HAWAII
DEPARTMENT OF TRANSPORTATION
HIGHWAYS DIVISION
H-1 VIADUCT (E.B.), RAMP C & HOV RAMP

BEAM TYPE SCHEDULE

KEEHI INTERCHANGE
F.A.I. PROJ. NO. I-HI-1 (168):17
SCALE: None DATE: 8/17/81

SHEET No. T-17 OF T-23 SHEETS

FED. ROAD DIST. NO.	STATE	FED. AID PROJ. NO.	FISCAL YEAR	SHEET NO.	TOTAL SHEETS
HAWAII	HAW.	I-HI-1(168)-17	1982	77	145

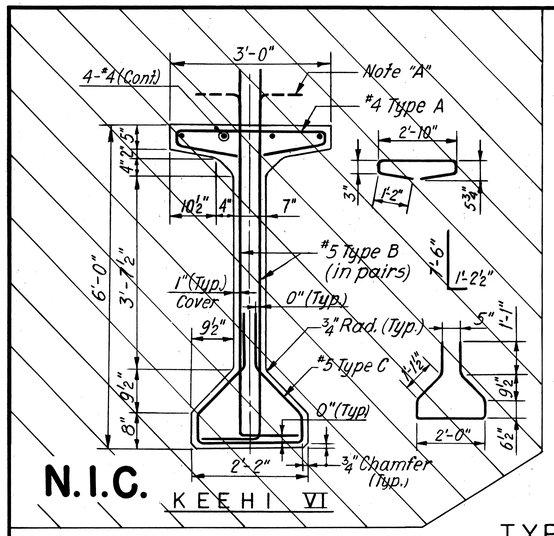

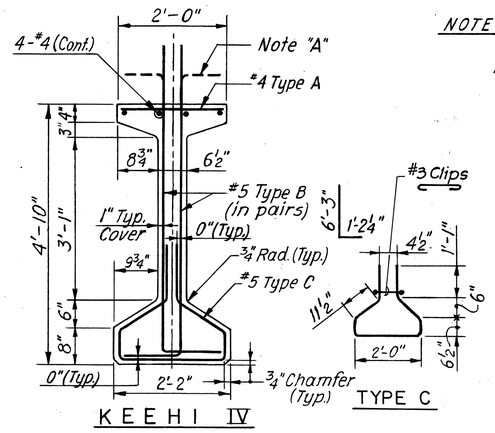

NOTE "A": Bend bars in field 1½" below top of deck. All reinforcing dimensions are out to out.

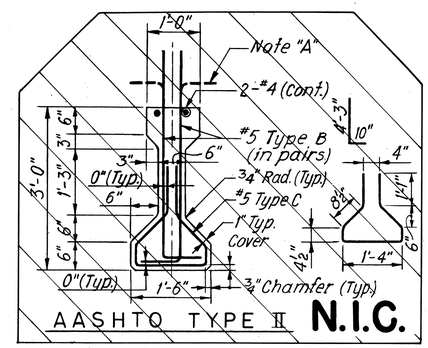

TYPICAL BEAM SECTION

Scale ¾" = 1'-0"

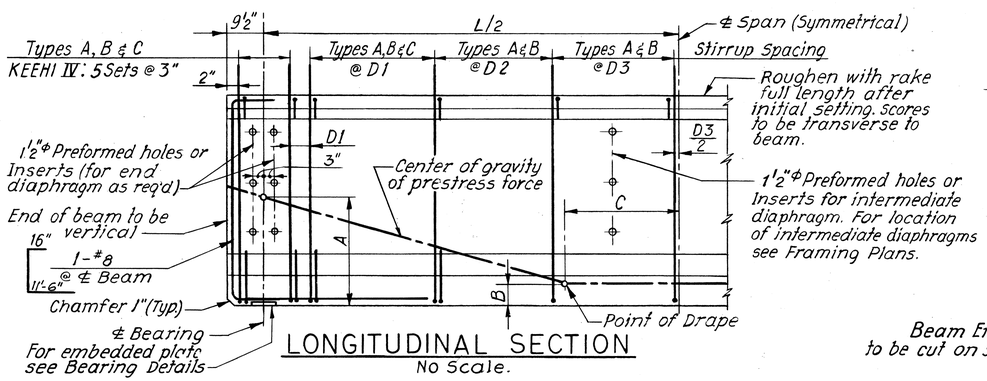

LONGITUDINAL SECTION

No Scale.

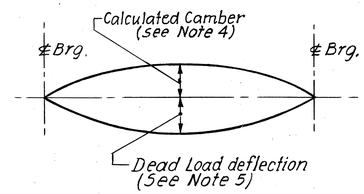

CAMBER DIAGRAM

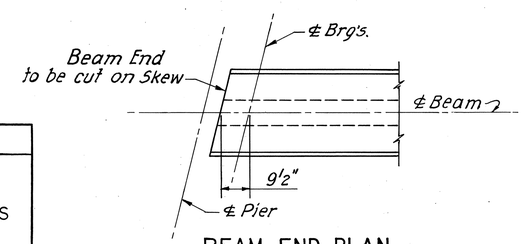

BEAM END PLAN

No Scale

NOTES FOR PRESTRESSED BEAMS

PRETENSIONING

1. Concrete shall have a minimum 28 day compressive strength of 6,000 psi.
2. Pretensioned strands shall be 7 wire ½"Φ stress-relieved steel strands (area = 0.153 in²) with an ultimate strength of 270 ksi. For properties see State Standard Specifications.
   Initial strand stress (before any losses): 199 ksi.; Initial loss = 20,000 psi.
   Total loss due to creep, shrinkage, elastic shortening and relaxation of steel = 45,000 psi.
3. Non-prestressed reinforcing steel shall be Grade 40 unless otherwise noted. For properties see State Standard Specifications.
4. The calculated camber includes the effect of the initial prestress force and the weight of the beam after removal from bed. Negative values shown for calculated camber indicate a net upward deflection. Calculated camber values shown do not account for any camber growth of the beam. The actual camber shall not exceed the calculated camber shown on the plans by more than 100% at time of installation.
5. The dead load deflection includes the combined effects of the weight of slab, haunch & diaphragm.
6. Strand pattern shall be symmetrical about the longitudinal ℄ of the beam.
7. Strand release sequence shall not induce any lateral deflection of the beam.
8. Contractor shall submit his proposed strand pattern and releasing sequence to the Engineer for approval.
9. During curing care shall be taken to avoid any lateral deflection of the beam due to improper orientation.
10. Lifting devices shall be placed as close as possible to the center line of bearings of the beam. Details and locations of lifting devices shall be submitted to the Engineer for approval. Such approval does not relieve the Contractor of his responsibilities if beam is damaged due to failure of the lifting device.
11. See Framing Plans for locations of diaphragms & beam mark numbers. For beam types and lengths see beam type schedule. Lengths shown do not include effect of elastic shortening.
12. In lieu of the 7 wire ½" dia. stress-relieved steel strands (area 0.153 in²) with an ultimate strength of 270 ksi, the Contractor at his option may use 7 wire 7/16" dia. stress-relieved steel strands (area 0.115 in²) with an ultimate strength of 270 Ksi. For propreties of 7/16" dia. strand see special provisions. However, the working force and its center of gravity, as stated, shall not be revised, unless approved by the Engineer.

POST-TENSIONING

(Contractor's Option for Long Beams)

a. The ultimate 28-day compressive strength of concrete shall be a minimum of 6000 psi.
b. Post-tensioning steel shall consist of either ½"Φ, 270 ksi S/R multistrand tendons or high strength alloy steel bars. Sheathing shall be galvanized rigid duct (coef. of friction μ = 0.25 and wobble coef. K = 0.0006) for strands and galvanized metal sheathing (μ = 0.15 and k = 0.0002) for bars.
c. Loss due to creep, shrinkage, elastic shortening and relaxation of steel to be assumed = 35,000 psi.
d. Contractor shall submit the post-tensioned beam design including elongation, jacking and deflection computation to Engineer for approval. Estimate of losses (apart from that listed above) peculiar to post-tensioning shall be part of the calculations.
e. Contractor shall submit the tendon pattern and profile, sequence of stressing and anchorage details to Engineer for approval. Tendons location and post-tensioning shall be symmetrical about the longitudinal ℄ of the beam.
f. Pretensioning notes 3, 9, 10 and 11 also apply to post-tensioning.

BEAM SCHEDULE

BEAM TYPE	INITIAL* PRESTRESS FORCE (KIPS)	WORKING FORCE (KIPS)	CALCULATED CAMBER SEE NOTE 4	DEAD LOAD DEFLECTION SEE NOTE 5	LOCATION OF CENTER OF GRAVITY OF PRESTRESS FORCE			STIRRUPS			REQUIRED MIN. ULT. CONC. STRENGTH BEFORE RELEASE OF STRANDS (P.S.I.)	REMARKS
					DIST A	DIST B	DIST. TO PT. OF DRAPE C	NO. OF STIRRUPS @ SPACING D1	NO OF STIRRUPS @ SPACING D2	SPACING D3		
IV-A	1279	990	-1½"	1"	1'-4½"	4¼"	10'-0"	11 @ 12"	10 @ 18"	18"	4700	
IV-M	1400	1084	-1½"	1⅜"	1'-5¾"	5¾"	11'-0"	15 @ 9"	16 @ 12"	18"	5000	See Detail 'A'
IV-H	852	660	-5/8"	½"	1'-6"	5"	8'-0"	12 @ 10"	8 @ 18"	18"	4700	

* Before any losses

PRESTRESSED CONCRETE GIRDERS WILL BE FURNISHED BY OTHERS

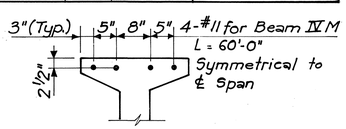

DETAIL 'A'

Scale: ¾" = 1'-0"

BUNDLING OF PRESTRESSING REINFORCEMENT

ARRANGEMENT AND CLEARANCE FOR PRETENSIONED STRANDS

1. Strands may be bundled in groups as shown.
2. The minimum distance "a" between groups or individual strands is 2" for ½" strands.
3. "a" is measured between centers of adjacent strands.

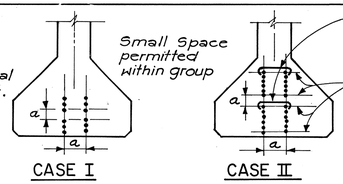

CASE I

CASE II

ARRANGEMENT AND CLEARANCE FOR POST TENSIONED STRANDS

1. Horizontal clearance between units equals 2" minimum.
2. Units may be bundled vertically in groups of 3 maximum.
3. Vertical clearance between bundled units equal 3" minimum.
4. Approval of the Engineer is required for deviation.

JOHN P. JOHNSON REGISTERED PROFESSIONAL ENGINEER No. 3647 HAWAII U.S.A.

THIS WORK WAS PREPARED BY ME OR UNDER MY SUPERVISION.

John P. Johnson

STATE OF HAWAII
DEPARTMENT OF TRANSPORTATION
HIGHWAYS DIVISION

H-1 VIADUCT (E.B.), RAMP C & HOV RAMP

PRESTRESS BEAM DETAILS
SHEET 1 OF 2

KEEHI INTERCHANGE
F.A.I. PROJECT NO. I-HI-1(168)-17
SCALE: AS SHOWN DATE: 8/17/81

SHEET No. T-18 OF T-23 SHEETS

77

ORIGINAL PLAN | SURVEY PLOTTED BY | DRAWN BY M. Nishiura | TRACED BY | DESIGNED BY HABIB NOORATA | QUANTITIES BY | CHECKED BY J. Chandler | DATE | NOTE BOOK | No.

FED. ROAD DIST. NO.	STATE	FED. AID PROJ. NO.	FISCAL YEAR	SHEET NO.	TOTAL SHEETS
HAWAII	HAW.	I-H1-1(168)17	1982	78	145

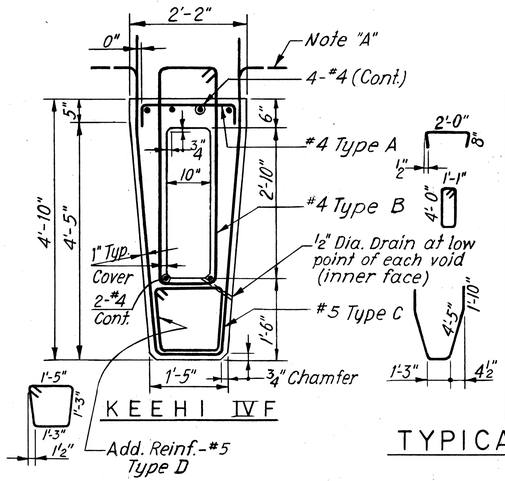

NOTE "A": Bend bars in field 1½" below top of deck.
All reinforcing dimensions are out to out.

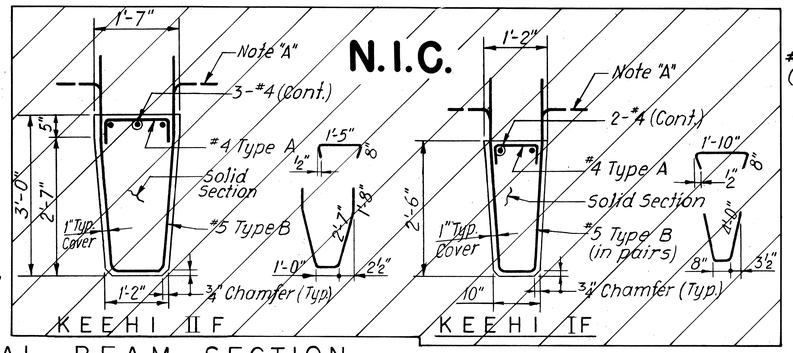

TYPICAL BEAM SECTION
Scale ¾" = 1'-0"

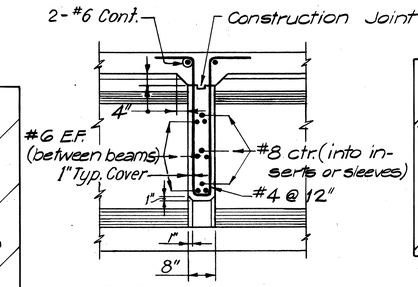

TYPICAL SECTION
INTERMEDIATE DIAPHRAGMS
Scale ½" = 1'-0"

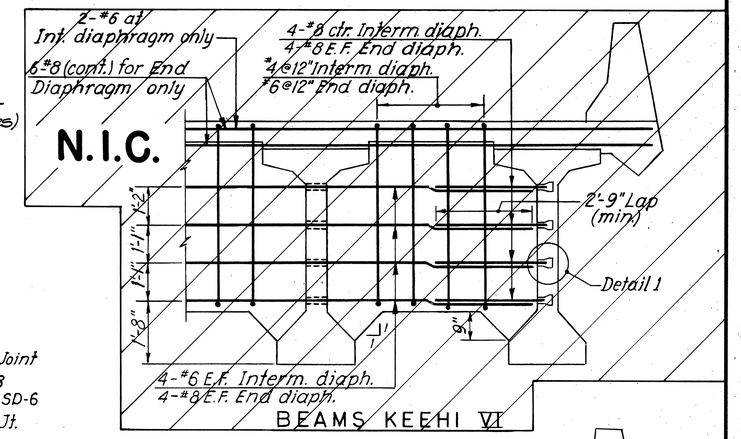

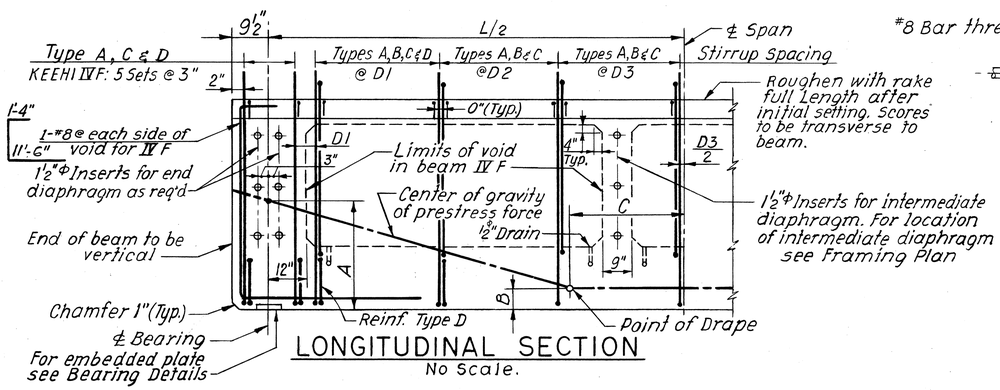

LONGITUDINAL SECTION
No Scale.

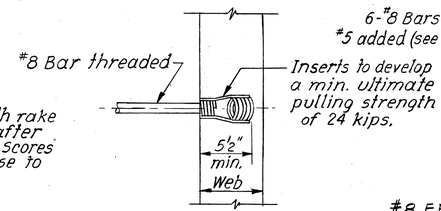

DETAIL I
Scale 1½" = 1'-0"

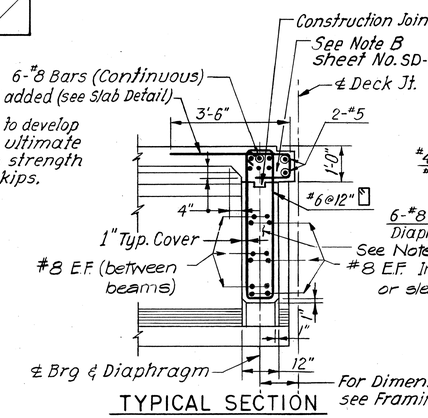

TYPICAL SECTION
END DIAPHRAGMS
Scale ½" = 1'-0"

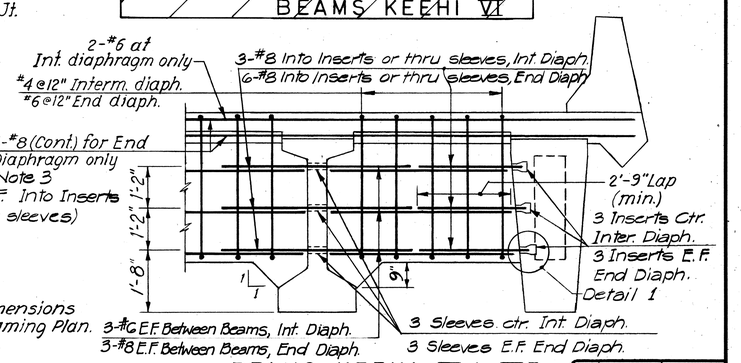

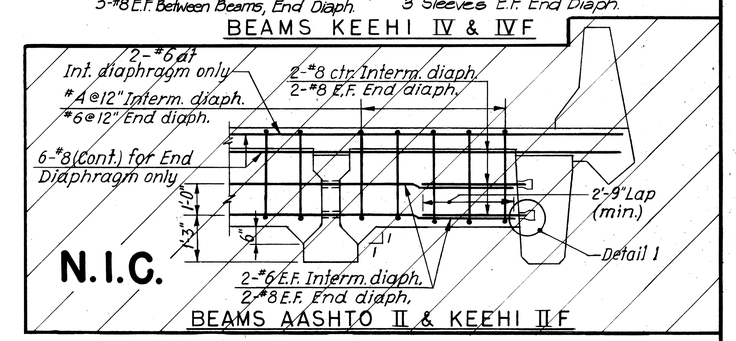

TYPICAL INTERMEDIATE AND END DIAPHRAGMS
Scale: ½" = 1'-0"

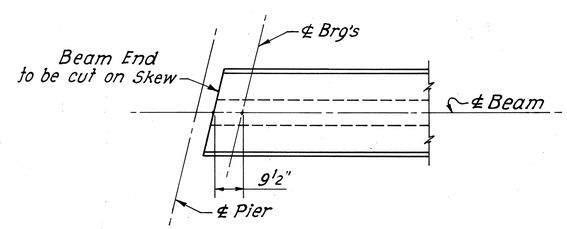

BEAM END PLAN KEEHI IVF
No Scale

BEAM SCHEDULE

BEAM TYPE	INITIAL PRESTRESS FORCE (KIPS) *	WORKING FORCE (KIPS)	CALCULATED CAMBER SEE NOTE 4	DEAD LOAD DEFLECTION SEE NOTE 5	LOCATION OF CENTER OF GRAVITY OF PRESTRESS FORCE			STIRRUPS			REQUIRED MIN. ULT. CONC. STRENGTH BEFORE RELEASE OF STRANDS (P.S.I.)	REMARKS
					DIST. A	DIST. B	DIST. TO PT. OF DRAPE C	NO. OF STIRRUPS @ SPACING D1	NO. OF STIRRUPS @ SPACING D2	SPACING D3		
IVF-A	1461	1131	-1½"	1¼"	1'-8"	8"	10'-0"	11@12"	11@18"	18"	4700	
IVF-D	1096	848	-1"	⅝"	1'-7¼"	6½"	9'-0"	9@14"	9@18"	18"	4500	
IVF-L	1644	1272	-1¾"	1½"	1'-10½"	7¾"	11'-0"	12@12"	12@18"	18"	5100	
IVF-C	1522	1178	-1¾"	1½"	1'-9"	7"	10'-0"	11@12"	11@18"	18"	5100	See Detail 'B'

* Before any losses

NOTES:
1. For Prestress Notes and Camber Diagram see Sh. No. T-18
2. Intermediate and End Diaphragms shall be Class A Concrete.
3. Apply Epoxy Bonding Compound to contact area on all fascia Beams before placing diaphragm concrete. Epoxy Bonding Compound incidental to concrete in Bridges.
4. Bars in sleeves shall be grouted in place before pouring the diaphragms.
5. Inserts and Sleeves are incidental to prestressed concrete beam.

NOTES, Cont'd.:
6. Diaphragm bars thru sleeves or threated into inserts shall be paid under "Reinforcing in Bridges, ____".

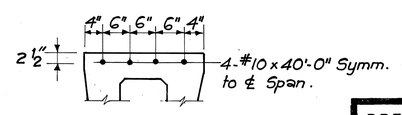

DETAIL 'B'
(Beam IVF-C)
Scale ¾" = 1'-0"

PRESTRESSED CONCRETE GIRDERS WILL BE FURNISHED BY OTHERS

JOHN P. JOHNSON REGISTERED PROFESSIONAL No. 3647 HAWAII, U.S.A.

THIS WORK WAS PREPARED BY ME OR UNDER MY SUPERVISION.

STATE OF HAWAII
DEPARTMENT OF TRANSPORTATION
HIGHWAYS DIVISION
H-1 VIADUCT (E.B.), RAMP C & HOV RAMP

PRESTRESS BEAM DETAILS
SHEET 2 OF 2

KEEHI INTERCHANGE
F.A.I. PROJECT NO. 1-H1-1(168)17
SCALE: AS SHOWN DATE: 8/17/81

SHEET No. T-19 OF T-23 SHEETS

ORIGINAL PLAN
SURVEY PLOTTED BY
DRAWN BY M. Fujishige
TRACED BY HABIB NOORATA
DESIGNED BY
QUANTITIES BY
CHECKED BY
DATE
NOTE BOOK
NO.

FED. ROAD DIST. NO.	STATE	FED. AID PROJ. NO.	FISCAL YEAR	SHEET NO.	TOTAL SHEETS
HAWAII	HAW.	I-HI-I(168)17	1982	79	145

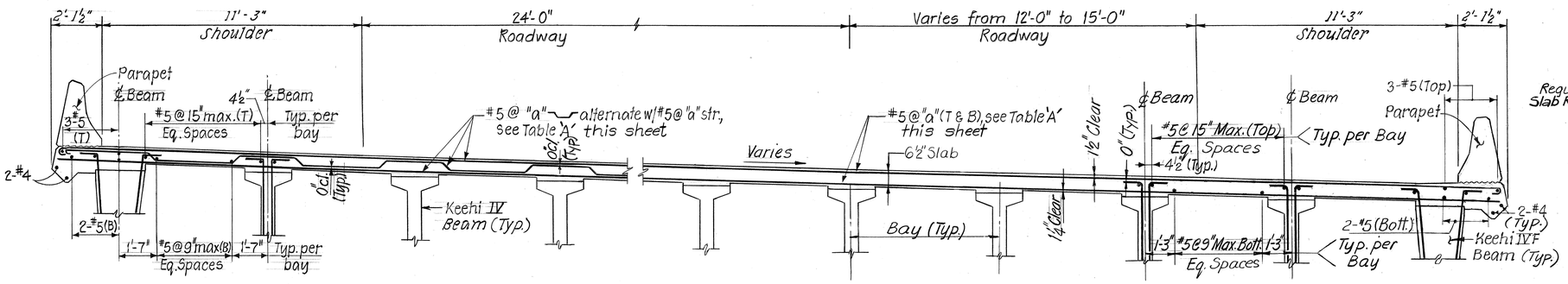

TYPICAL FOR SPANS: 1HE

TYPICAL FOR SPANS: 2HE

TYPICAL DECK SECTION

For H-1 (E.B.) up to Sta. 237+65.09 only
Scale: 3/8" = 1'-0"

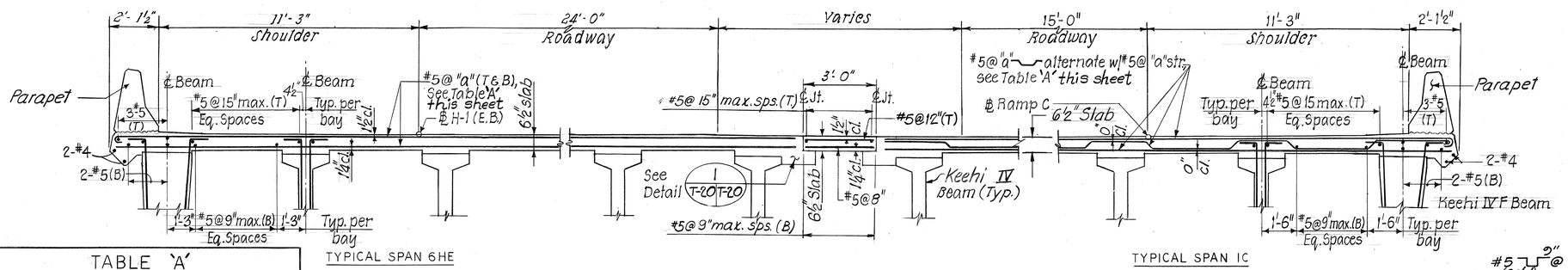

TYPICAL SPAN 6HE

TYPICAL SPAN 1C

TABLE 'A'	
SPACING REINF. BARS IN SLAB	
SPACING "a" (max.)	SPAN
7"	2HE thru 4HE
7½"	5HE, 6HE
14"	1HE, 1C

SECTION A T-2 T-20
Looking Up-station
Scale: 3/8" = 1'-0"

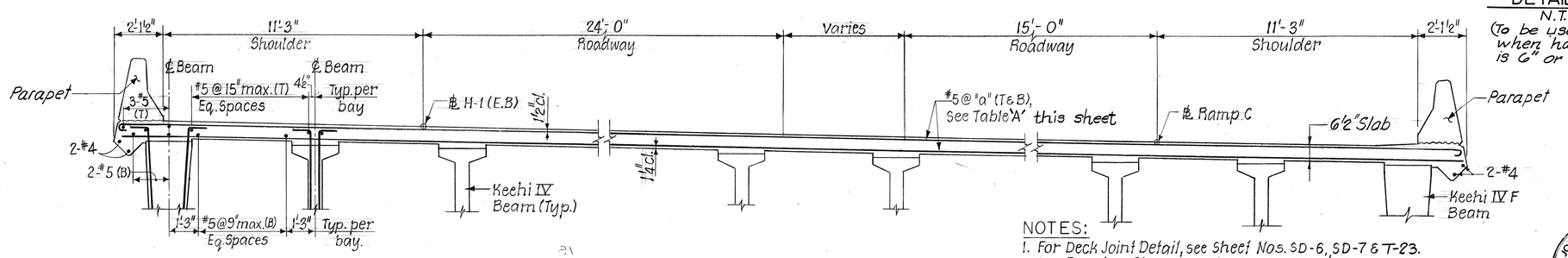

TYPICAL DECK SECTION

For Spans 3HE, 4HE and 5HE
Looking Up-Station
Scale: 3/8" = 1'-0"

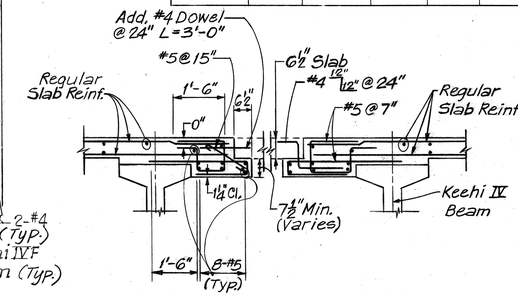

DETAIL 1 T-20 T-20
Scale: ½" = 1'-0"

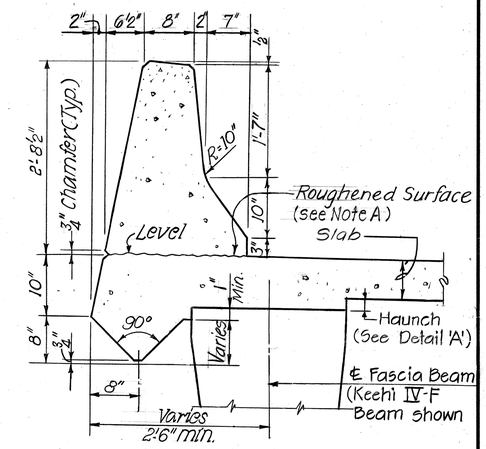

STANDARD PARAPET DETAIL

Scale: 1" = 1'-0"
(For Parapet Reinf., see Sheet No. SD-2)

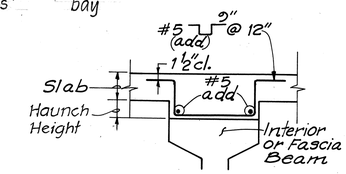

DETAIL 'A'

N.T.S.
(To be used only when haunch height is 6" or more)

NOTE A:
The entire surface of the joint shall be thoroughly cleaned of surface laitance, curing compound and other material foreign to the concrete. Clean aggregate shall be exposed by abrasive blast cleaning after the curing period or immediately before placing concrete at the joint.

NOTES:
1. For Deck Joint Detail, see Sheet Nos. SD-6, SD-7 & T-23.
2. For Framing Plans, see Sheet Nos. T-15 & T-16.
3. Where bar length would exceed 60 feet, bars shall be spliced in alternate locations.
4. For additional reinforcement at intermediate and end diaphragms, see Sheet No. T-19.
5. For additional reinforcement at scuppers, see Sheet No. SD-9.
6. For allowable stresses of Class A and Class BD Concrete see Sheet No. SD-1.
7. Deck Slab shall be Class BD Concrete.

JOHN P. JOHNSON REGISTERED PROFESSIONAL ENGINEER No. 3647 HAWAII, U.S.A.

THIS WORK WAS PREPARED BY ME OR UNDER MY SUPERVISION.
John P. Johnson

STATE OF HAWAII
DEPARTMENT OF TRANSPORTATION
HIGHWAYS DIVISION
H-1 VIADUCT (E.B.), RAMP C & HOV RAMP

DECK REINFORCEMENT
SHEET 1 OF 2
KEEHI INTERCHANGE
F.A.I. PROJ. NO. I-HI-I (168):17
SCALE: AS SHOWN DATE: 8/17/81
SHEET No. T-20 OF T-23 SHEETS

ORIGINAL PLAN | SURVEY PLOTTED BY | DRAWN BY PATRICIA HAKIN | TRACED BY | DESIGNED BY | QUANTITIES BY | CHECKED BY | DATE | NOTE BOOK | No.

FED. ROAD DIST. NO.	STATE	FED. AID PROJ. NO.	FISCAL YEAR	SHEET NO.	TOTAL SHEETS
HAWAII	HAW.	I-HI-(168)-17	1982	80	145

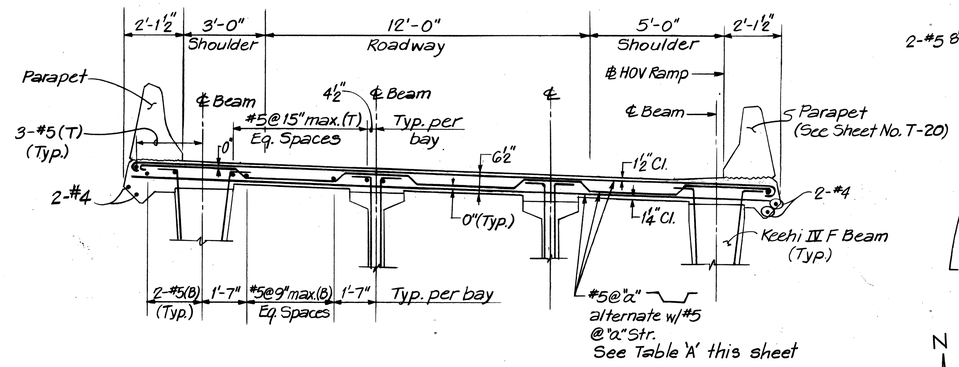

TYPICAL DECK SECTION
FOR HOV RAMP SPANS 1HV, 2HV, 3HV, 5 HV & 6HV
SCALE: 3/8" = 1'-0"

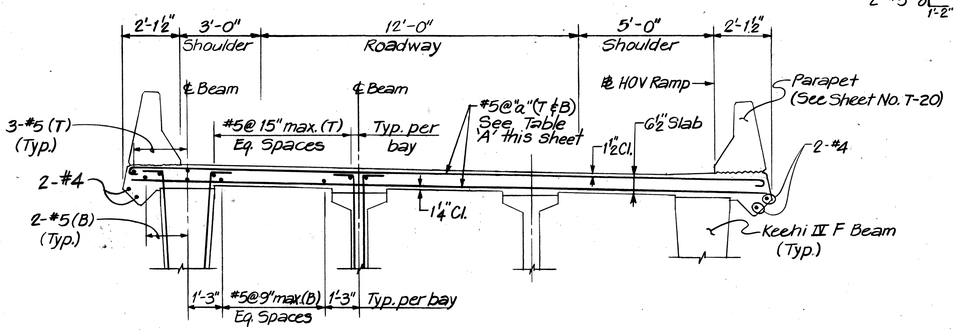

TYPICAL DECK SECTION
FOR HOV RAMP SPAN 4HV
SCALE: 3/8" = 1'-0"

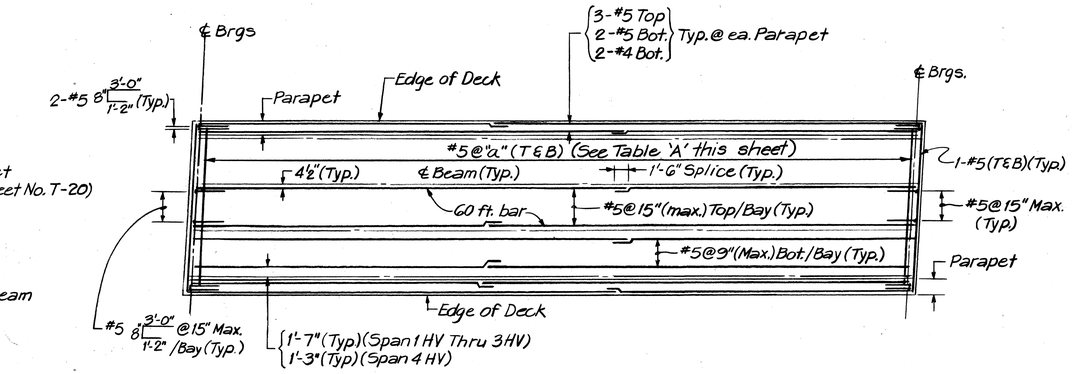

TYPICAL REINFORCED DECK SLAB
(FOR SPANS 1HV THRU 4HV)
SCALE: 1" = 10'

N

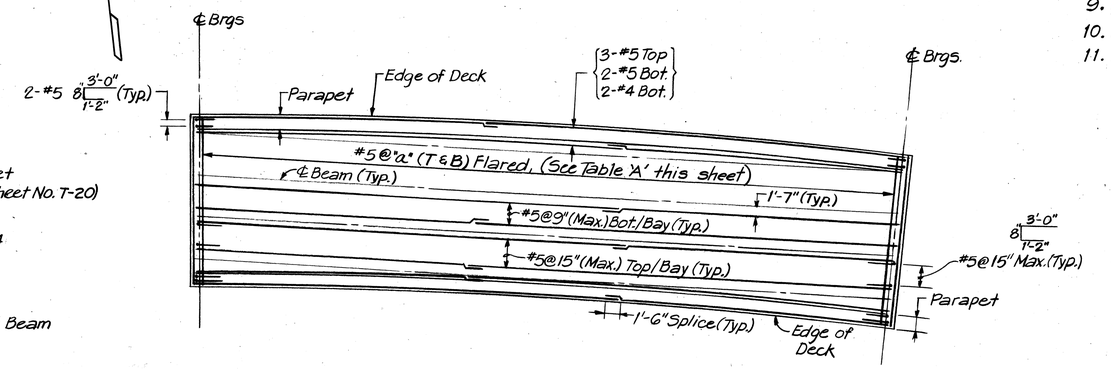

TYPICAL REINFORCED DECK SLAB
(FOR SPANS 5HV, 6HV)
SCALE: 1" = 10'

NOTES:

1. For allowable stresses of Class A & Class BD Concrete see Sheet No. SD-1.
2. For General Plan and Elevation, see Sheet No. T-2.
3. For Framing Plan, see Sheet Nos. T-15 & T-16.
4. For Deck Joint Details, see Sheet Nos. SD-6, SD-7.
5. For Standard Parapet Detail, Reinforcement & Deck Cross Slope for Drainage, see Sheet No. SD-2.
6. All longitudinal reinforcing to be parallel to beams except in flared bays.
7. Alternate all splices in longitudinal and transverse directions where the total length of reinforcing bars exceed 60'-0".
8. For additional reinforcement at End and Intermediate Diaphragms, see Sheet No. T-19.
9. For location of scuppers, see Sheet No. T-2.
10. For add. reinf. at scuppers, see Sheet No. SD-9.
11. Deck Slab shall be Class BD Concrete.

TABLE 'A'	
SPACING REINF. BARS IN SLAB	
SPACING "a" (max.)	SPAN
7"	4HV
14"	1HV THRU 3HV, 5HV, 6HV

ORIGINAL PLAN		SURVEY PLOTTED BY	DATE
		DRAWN BY	
		TRACED BY	
NOTE BOOK		DESIGNED BY	
		QUANTITIES BY	
		CHECKED BY	
	No.		

JOHN P. JOHNSON
REGISTERED PROFESSIONAL ENGINEER
No. 3647
HAWAII, U.S.A.

THIS WORK WAS PREPARED BY ME OR UNDER MY SUPERVISION.
John P. Johnson

STATE OF HAWAII
DEPARTMENT OF TRANSPORTATION
LAND TRANSPORTATION FACILITIES DIVISION
H-1 VIADUCT (E.B.), RAMP C & HOV RAMP

DECK REINFORCEMENT
SHEET 2 OF 2

KEEHI INTERCHANGE
F.A.I. PROJECT NO. I-HI-I (168):17
SCALE: AS SHOWN DATE: 8/17/81

SHEET No. T-21 OF T-23 SHEETS

FED. ROAD DIST. NO.	STATE	FED. AID PROJ. NO.	FISCAL YEAR	SHEET NO.	TOTAL SHEETS
HAWAII	HAW.	I-HI-I(168)-17	1982	81	145

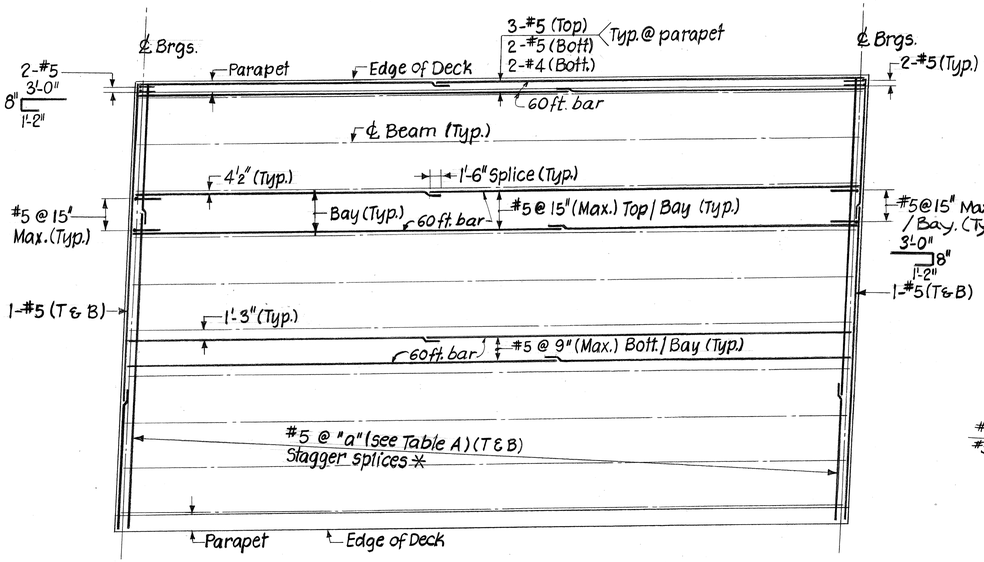

TYPICAL REINFORCED DECK SLAB FOR SPAN 1HE
Scale: 1" = 10'

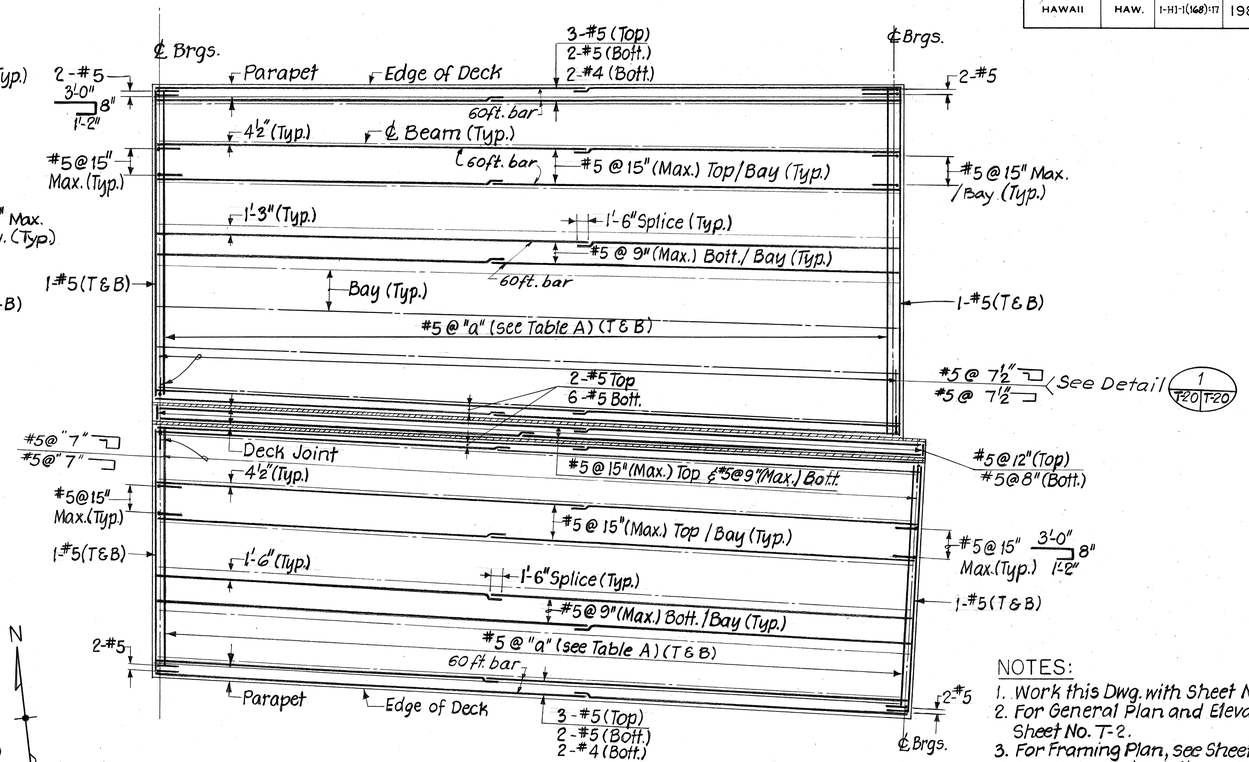

TYPICAL REINFORCED DECK SLAB FOR SPANS 6HE & IC
Scale: 1" = 10'

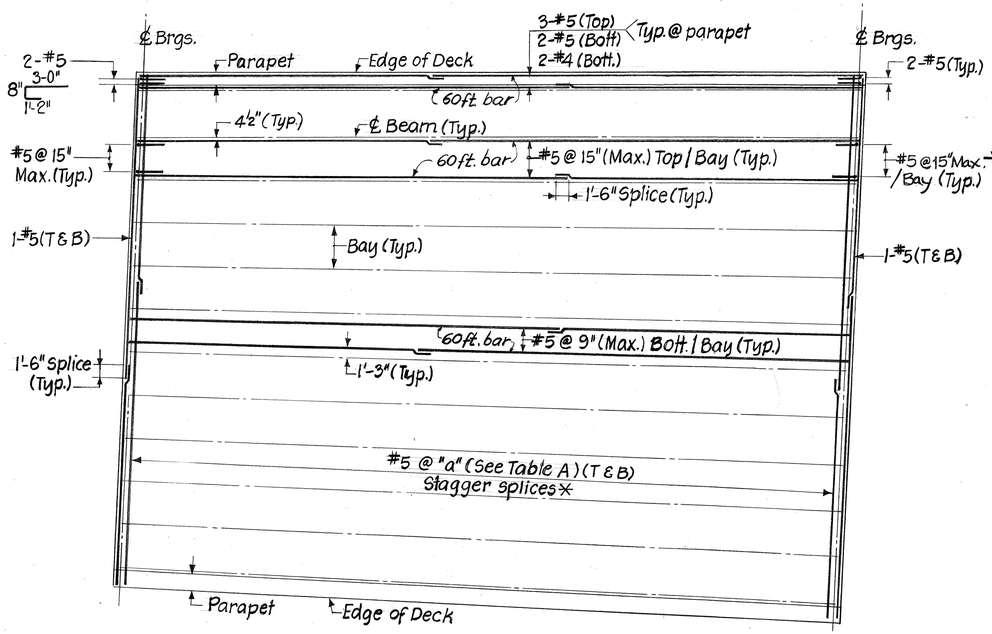

TYPICAL REINFORCED DECK SLAB FOR SPANS 2HE THRU 5HE
Scale: 1" = 10'

✳ For Top bars provide splices at ℄ Bay.
For Bottom bars provide splices at ℄ Beam.

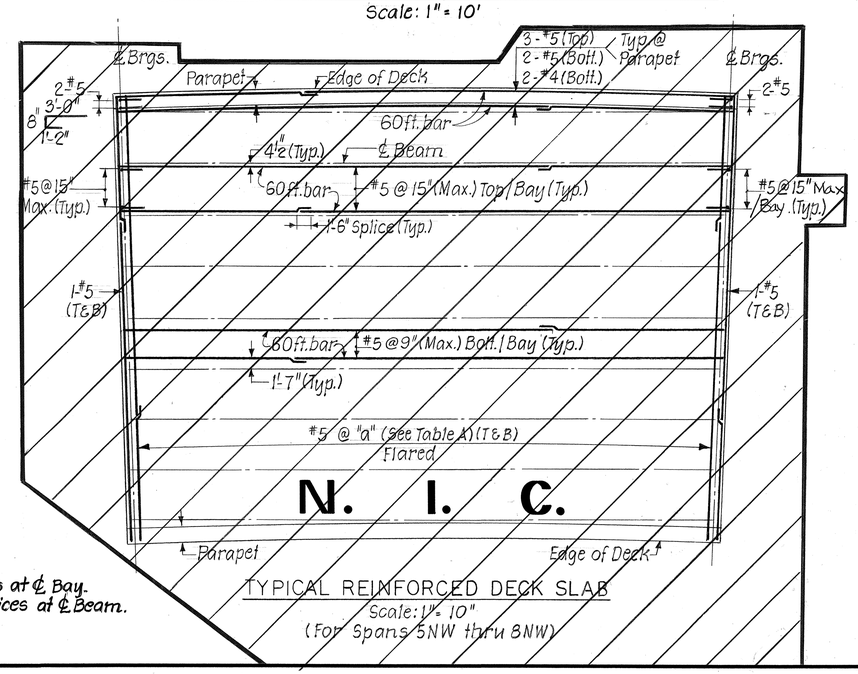

TYPICAL REINFORCED DECK SLAB
Scale: 1" = 10'
(For Spans 5NW thru 8NW)

NOTES:

1. Work this Dwg. with Sheet No. T-20.
2. For General Plan and Elevation, see Sheet No. T-2.
3. For Framing Plan, see Sheet Nos. T-15 & T-16.
4. For Deck Joint Details, see Sheet Nos. SD-6, SD-7 & T-23.
5. For Standard Parapet Detail, Reinforcement & Deck Cross Slope for Drainage, see Sheet No. SD-2.
6. All longitudinal reinforcing to be parallel to beams except in flared bays.
7. Alternate all splices in longitudinal & transverse directions where the total length of reinforcing bars exceed 60'-0".
8. For additional reinforcement at End & Intermediate Diaphragms, see Sheet No. T-19.
9. For location of scuppers, see Sheet No. T-2.
10. For add. reinf. at scuppers, see Sheet No. SD-9.

JOHN P. JOHNSON
REGISTERED PROFESSIONAL ENGINEER
No. 3647
HAWAII, U.S.A.

THIS WORK WAS PREPARED BY ME OR UNDER MY SUPERVISION.

John P. Johnson

STATE OF HAWAII
DEPARTMENT OF TRANSPORTATION
HIGHWAYS DIVISION

H-1 VIADUCT (E.B.), RAMP C & HOV RAMP

DECK REINFORCEMENT PLAN

KEEHI INTERCHANGE
F.A.I. PROJ. NO. I-HI-I (168)-17

SCALE: AS SHOWN DATE: 8/17/81

SHEET No. T-22 OF T-23 SHEETS

ORIGINAL PLAN
NOTE BOOK No.
SURVEY PLOTTED BY
DRAWN BY P. PERRIGA/MALKIN
TRACED BY
DESIGNED BY
QUANTITIES BY
CHECKED BY
DATE

FED. ROAD DIST. NO.	STATE	FED. AID PROJ. NO.	FISCAL YEAR	SHEET NO.	TOTAL SHEETS
HAWAII	HAW.	I-H1-1(168)17	1982	82	145

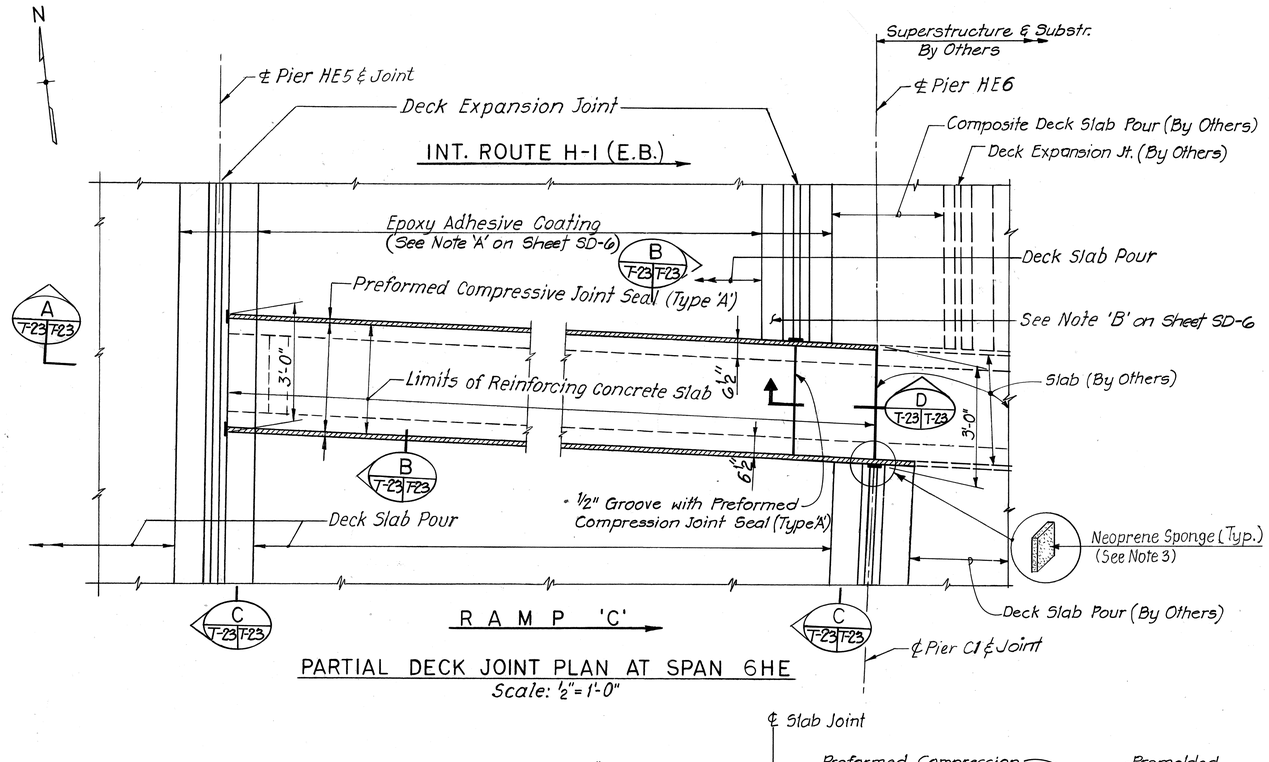

PARTIAL DECK JOINT PLAN AT SPAN 6HE
Scale: ½" = 1'-0"

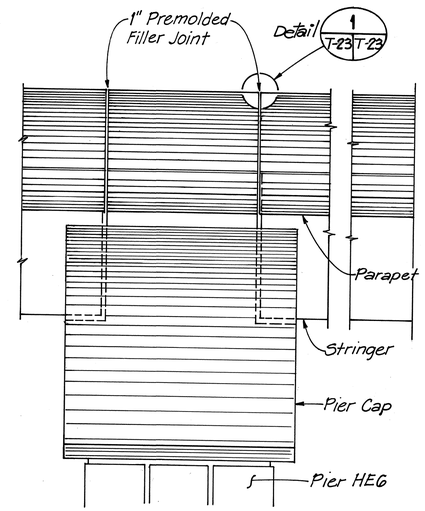

PARTIAL ELEVATION-NORTH CONC. PARAPET AT PIER HE6
N.T.S.

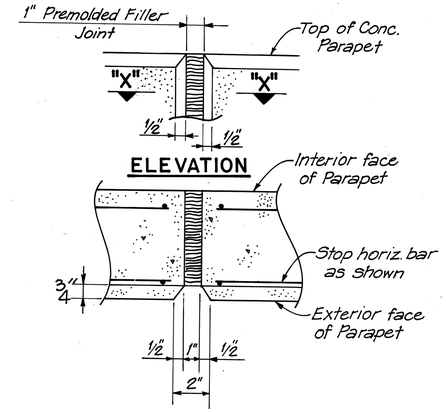

SECTION "X"-"X"
TYP. 1" PREMOLDED FILLER JOINT

DETAIL 1 T-23 T-23
SCALE: 3" = 1'-0"

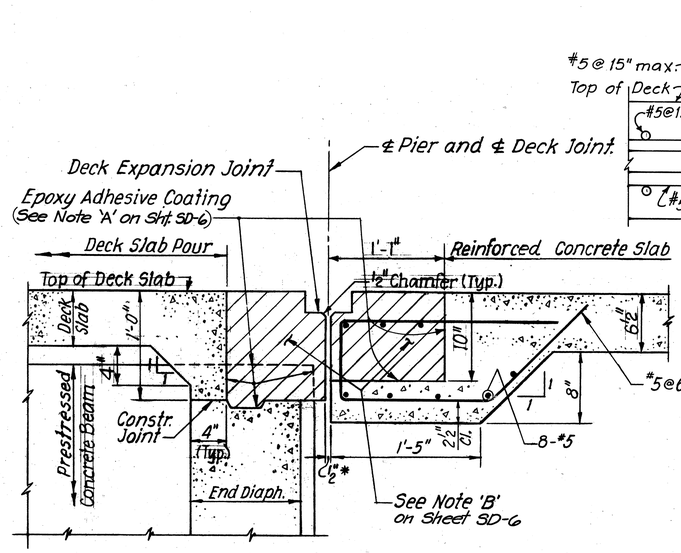

SECTION A T-23 T-23
Scale: 1½" = 1'-0"

* Joint opening at time of installation of joint. Joint to be formed by premolded filler.

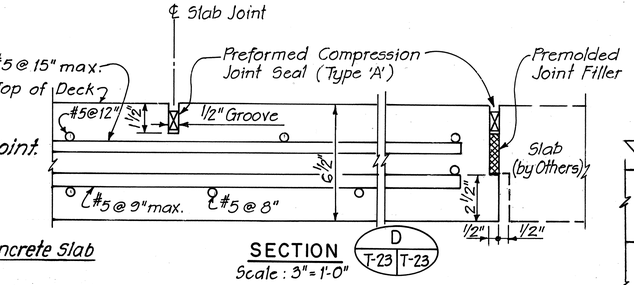

SECTION D T-23 T-23
Scale: 3" = 1'-0"

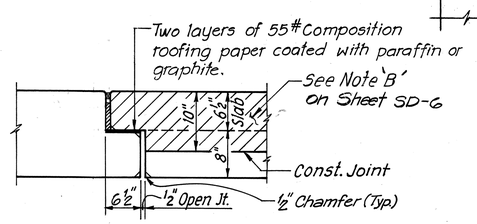

SECTION C T-23 T-23
Scale: 1" = 1'-0"

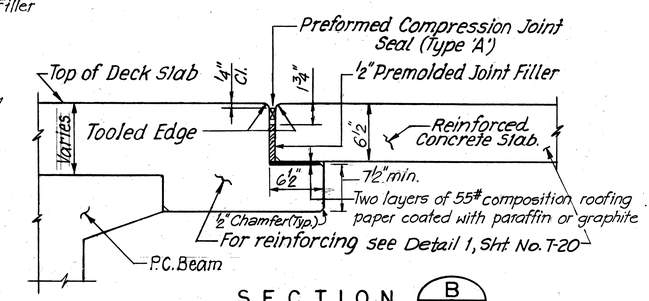

SECTION B T-23 T-23
Scale: 1½" = 1'-0"

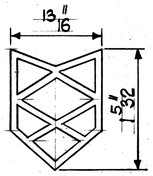

TYPE 'A' JOINT SEAL
N.T.S.
(Incidental to Concrete in Bridges)

NOTES:

1. For typical deck Joint details at Piers, and for Notes A & B, see Sheet Nos: SD-6 & SD-7.
2. For location of longitudinal deck joints see Sheet No. T-2.
3. On all joint intersections of the preformed compression seal and deck expansion joint and break points shown on this Sheet, use Neoprene Sponge cut to the proper size. Glue sponge to the end of the seal with Cyanoacrylate Adhesive.

JOHN P. JOHNSON REGISTERED PROFESSIONAL ENGINEER No. 3647 HAWAII, U.S.A.

THIS WORK WAS PREPARED BY ME OR UNDER MY SUPERVISION.
John P. Johnson

STATE OF HAWAII
DEPARTMENT OF TRANSPORTATION
HIGHWAYS DIVISION
H-1 VIADUCT (E.B.), RAMP C & HOV RAMP

DECK JOINT DETAILS

KEEHI INTERCHANGE
F.A.I. PROJ. NO. I-H1-1 (168):17
SCALE: AS SHOWN DATE: 8/17/81

SHEET No. T-23 OF T-23 SHEETS

ORIGINAL PLAN | SURVEY PLOTTED BY | DRAWN BY M. Nishiko | TRACED BY | DESIGNED BY J. Chenoweth | QUANTITIES BY | CHECKED BY DESIO GILSTAD | DATE | NOTE BOOK | NO.

FED. ROAD DIST. NO.	STATE	FED. AID PROJ. NO.	FISCAL YEAR	SHEET NO.	TOTAL SHEETS
HAWAII	HAW.	I-HI-1(168)17	1982	83	145

INDEX

ESTIMATED QUANTITIES

ITEM NO.	ITEM	UNIT	QUANTITIES N.C. (EB)	QUANTITIES RAMP A & B
206.6000	STRUCTURE EXCAVATION FOR BRIDGES	CU. YD.	2902	1940
206.7000	STRUCTURE BACKFILL	CU. YD.	1018	—
503.1930	CONCRETE IN BRIDGES (EXCEPT FOOTING); N.C. (EB)	LUMP SUM	2545 cu. yd.	—
503.1940	CONCRETE IN BRIDGES (EXCEPT FOOTING); RAMP A & B	LUMP SUM	—	2330 cu. yd.
503.1980	CONCRETE IN BRIDGES FOOTING (INCL PEDESTAL); N.C. (EB)	LUMP SUM	1256 cu yd.	—
503.1990	CONCRETE IN BRIDGES FOOTING (INCL PEDESTAL); RAMP A & B	LUMP SUM	—	1280 cu. yd.
503.6020	TREMIE CONCRETE; N.C. (EB)	LUMP SUM	609 cu. yd.	—
503.6030	TREMIE CONCRETE; RAMP A & B	LUMP SUM	—	340 cu. yd.
504.0400	ERECTING GIRDERS, N.C. (EB)	LUMP SUM	80 EACH	—
504.0500	ERECTING GIRDERS, RAMP A & B	LUMP SUM	—	109 EACH
505.0030	STRAND SLIPPAGE MEASUREMENT OF PILES	EACH	700	750
505.0430	PRECAST, PRESTRESSED CONC. PILES-FURNISHED (16½" OCTAGONAL)	LIN. FT.	30,965	30,290
505.0440	PRECAST, PRESTRESSED CONC. PILES-FURNISHED (20" SQUARE)	LIN. FT.	—	2,970
505.4300	PRECAST, PRESTRESSED CONC. PILES-DRIVEN (16½" OCTAGONAL)	LIN. FT.	30,353	29,690
505.4400	PRECAST, PRESTRESSED CONC. PILES-DRIVEN (20" SQUARE)	LIN. FT.	—	2,790
505.4800	FURNISHING AND INSTALLING MALE OR FEMALE SPLICE COUPLING	EACH	765	815
505.6100	SLEEVED HOLE 30 INCH DIA.	LIN. FT.	801	960
505.6200	SLEEVED HOLE 36 INCH DIA.	LIN. FT.		1620
505.8100	PILE DRIVING SHOE	EACH	153	163
505.9203	"BUILD-UPS" OF PILES; N.C. (EB)	F. A.		
505.9204	"BUILD-UPS" OF PILES; RAMP A & B	F. A.		
505.9303	RETAPPING OF PILES; N.C. (EB)	F. A.		
505.9304	RETAPPING OF PILES; RAMP A & B	F. A.		
505.9404	PILE ACCEPTANCE TEST; N.C. (EB)	F. A.		
505.9405	PILE ACCEPTANCE TEST; RAMP A & B	F. A.		
507.7100	STANDARD PARAPET	LIN. FT.	1612	1976
511.0100	DECK EXPANSION JOINT	LIN. FT.	486	700
602.1330	REINFORCING STEEL IN BRIDGES; N.C. (EB)	LUMP SUM	832,503 lbs.	.
602.1340	REINFORCING STEEL IN BRIDGES; RAMP A & B	LUMP SUM		773,100 lbs
604.5000	FURNISHING AND INSTALLING TYPE A-12 STEEL FRAME AND GRATE FOR DECK DRAINAGE	EACH	12	24
634.0320	EXPLORATORY WORK AT STRUCTURE FOOTING; N.C. (EB)	F. A.		
634.0330	EXPLORATORY WORK AT STRUCTURE FOOTING; RAMP A & B	F. A.		
660.0100	BITUMEN COATING	SQ. YD.	9020	11,700
675.0100	CUSHION BARRIER	EACH		1

PRESTRESSED CONCRETE GIRDERS WILL BE FURNISHED BY OTHERS

GEORGE K. NISHIMURA
REGISTERED PROFESSIONAL ENGINEER
No. 1388
HAWAII, U.S.A.

THIS WORK WAS PREPARED BY ME OR UNDER MY SUPERVISION

HAROLD TAKASHI MIYAMOTO
REGISTERED PROFESSIONAL ENGINEER
No. 1514
HAWAII, U.S.A.

THIS WORK WAS PREPARED BY ME OR UNDER MY SUPERVISION

STATE OF HAWAII
DEPARTMENT OF TRANSPORTATION
HIGHWAYS DIVISION

NIMITZ CONNECTOR (EB)
RAMP "A" AND RAMP "B"
INDEX TO DRAWINGS AND ESTIMATED QUANTITIES
KEEHI INTERCHANGE
FAI PROJ. NO I-HI-1 (168)17

SCALE: DATE JULY 1981

SHEET No. S-1 OF 49 SHEETS

ORIGINAL PLAN | SURVEY PLOTTED BY | DRAWN BY | TRACED BY | DESIGNED BY | QUANTITIES BY | CHECKED BY | DATE
NOTE BOOK | No.

FED. ROAD DIST. NO.	STATE	FED. AID PROJ. NO.	FISCAL YEAR	SHEET NO.	TOTAL SHEETS
HAWAII	HAW.	I-H1-1(168)17	1982	84	145

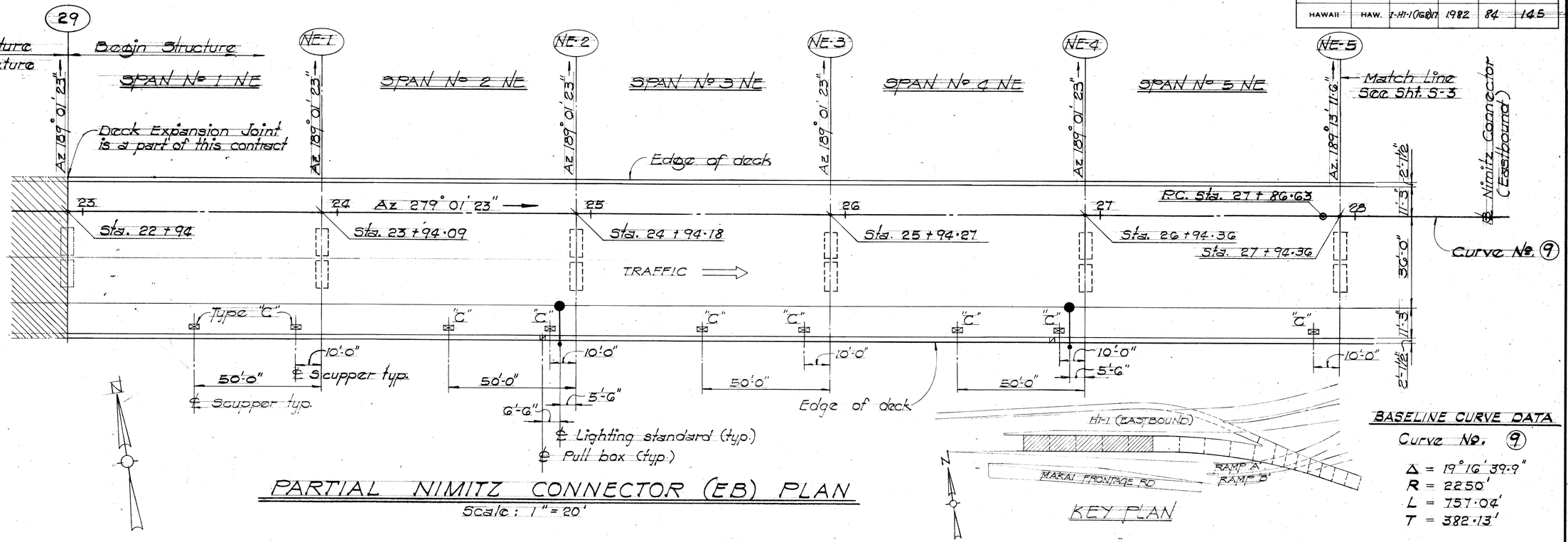

PARTIAL NIMITZ CONNECTOR (EB) PLAN

Scale: 1" = 20'

BASELINE CURVE DATA

Curve No. 9

$\Delta = 19°16'39.9"$
$R = 2250'$
$L = 757.04'$
$T = 382.13'$

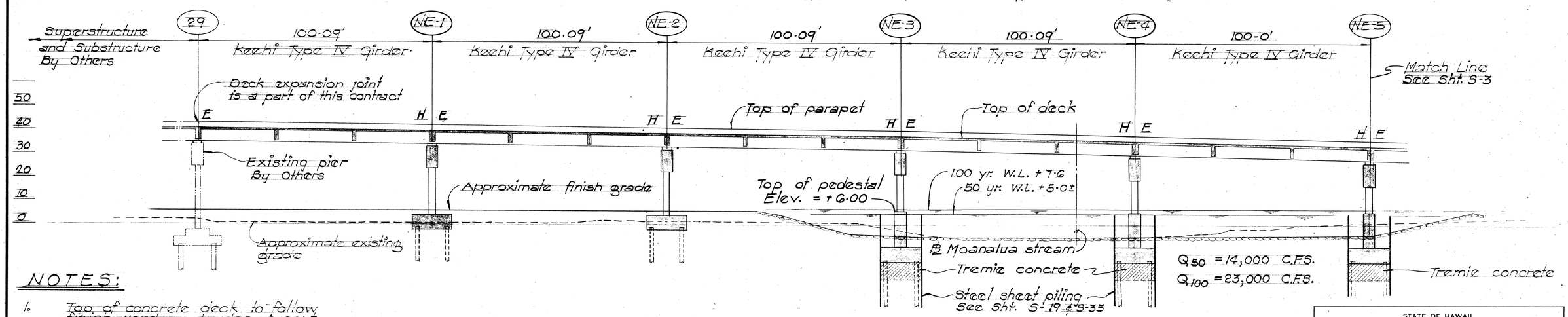

PARTIAL LONGITUDINAL SECTION ℄ NIMITZ CONNECTOR (EB)

Scale: 1" = 20'

NOTES:

1. Top of concrete deck to follow finish roadway grades, except otherwise noted.
2. ⊠ Denotes deck scuppers see details Sht. SD-8.
3. H Denotes Hinge Bearing.
4. E Denotes Expansion Bearing.
5. All azimuths are measured from South.

ORIGINAL PLAN	SURVEY PLOTTED BY	DATE
	PLAN PREPARED BY	
	TRACED BY	
NOTE BOOK	DESIGNED BY	
	QUANTITIES BY	
No.	CHECKED BY	

THIS WORK WAS PREPARED BY ME OR UNDER MY SUPERVISION
GEORGE K. NISHIKAWA REGISTERED PROFESSIONAL ENGINEER No. 1514 HAWAII, U.S.A.

THIS WORK WAS PREPARED BY ME OR UNDER MY SUPERVISION
HARUO TAKASHI MIYAMOTO REGISTERED PROFESSIONAL ENGINEER No. 1514 HAWAII, U.S.A.

STATE OF HAWAII
DEPARTMENT OF TRANSPORTATION
HIGHWAYS DIVISION

NIMITZ CONNECTOR (EB)
RAMP "A" AND RAMP "B"
GENERAL LAYOUT PLAN & LONGITUDINAL SECT.

KEEHI INTERCHANGE
FAI PROJ. NO. I-H1-1(168)17

SCALE: 1" = 20'-0" DATE: JULY 1981

SHEET No. S-2 OF 49 SHEETS

PRINTED ON NO. 1000H CLEARPRINT

FED. ROAD DIST. NO.	STATE	FED. AID PROJ. NO.	FISCAL YEAR	SHEET NO.	TOTAL SHEETS
HAWAII	HAW.	I-H1-1(168)17	1982	85	145

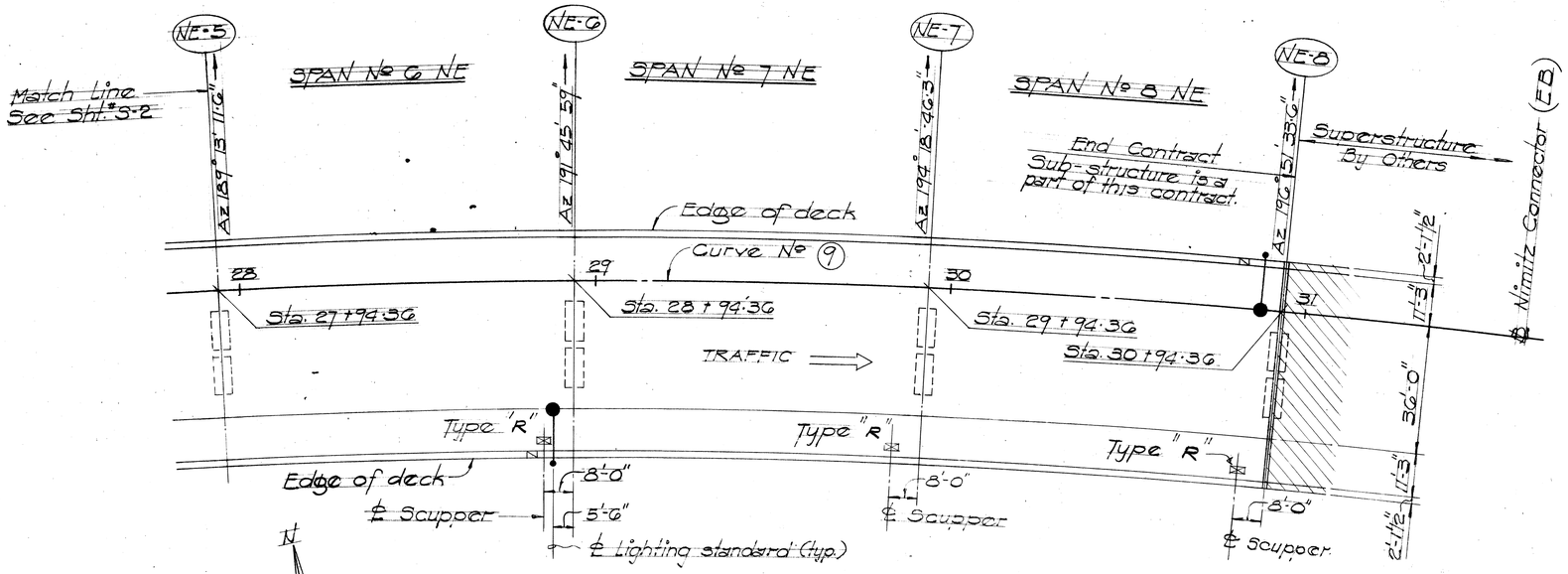

PARTIAL NIMITZ CONNECTOR (EB) PLAN

Scale: 1" = 20'

BASELINE CURVE DATA

Curve No 9

Δ = 19° 16' 39.9"
R = 2250'
L = 757.04'
T = 382.13'

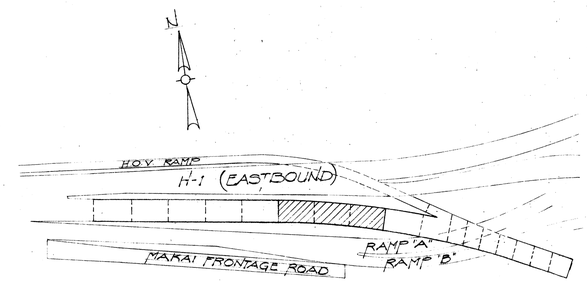

KEY PLAN

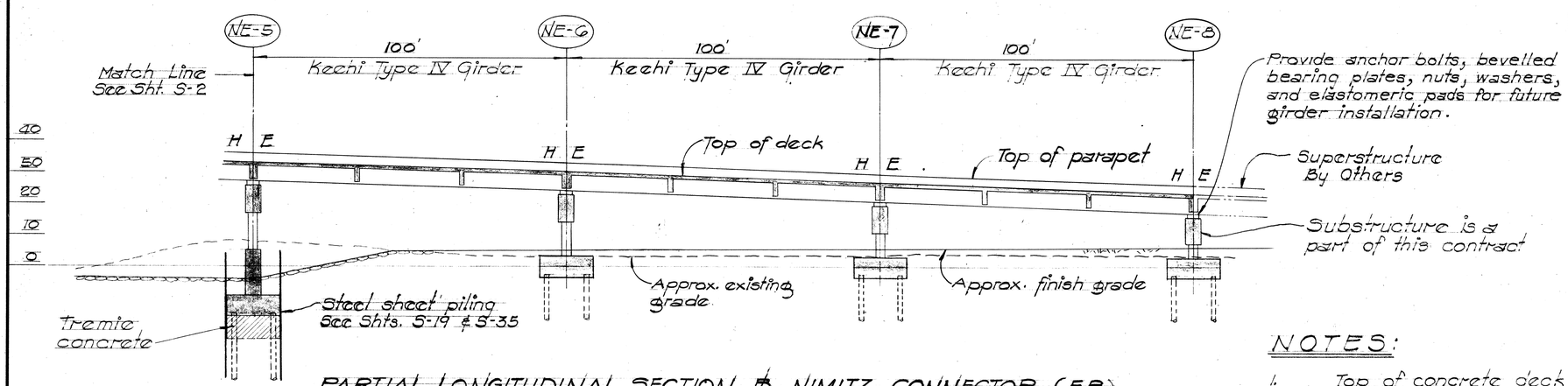

PARTIAL LONGITUDINAL SECTION ℄ NIMITZ CONNECTOR (EB)

Scale: 1" = 20'

NOTES:

1. Top of concrete deck to follow finish roadway grades, except otherwise noted.
2. ⊠ Denotes deck scuppers see detail Sht. S-36
3. H Denotes Hinge Bearing.
4. E Denotes Expansion Bearing
5. All azimuths are measured from south.

GEORGE K. NISHIMURA REGISTERED PROFESSIONAL ENGINEER No. 1388 HAWAII, U.S.A.

HAROLD TAKASHI MIYAMOTO REGISTERED PROFESSIONAL ENGINEER No. 1514 HAWAII, U.S.A.

THIS WORK WAS PREPARED BY ME OR UNDER MY SUPERVISION

THIS WORK WAS PREPARED BY ME OR UNDER MY SUPERVISION

STATE OF HAWAII
DEPARTMENT OF TRANSPORTATION
HIGHWAYS DIVISION

NIMITZ CONNECTOR (EB), RAMP "A" AND RAMP "B"

GENERAL LAYOUT PLAN & LONGITUDINAL SECTION

KEEHI INTERCHANGE
FAI. PROJ. NO. I-H1-1(168)17

SCALE: 1" = 20'-0" DATE: JULY, 1981

SHEET No. S-3 OF 49 SHEETS

ORIGINAL PLAN | SURVEY PLOTTED BY | DRAWN BY | TRACED BY | DESIGNED BY | QUANTITIES BY | CHECKED BY | DATE | NOTE BOOK | No.

PRINTED ON NO. 1000H CLEARPRINT

FED. ROAD DIST. NO.	STATE	FED. AID PROJ. NO.	FISCAL YEAR	SHEET NO.	TOTAL SHEETS
HAWAII	HAW.	I-HI-1(68)17	1982	86	145

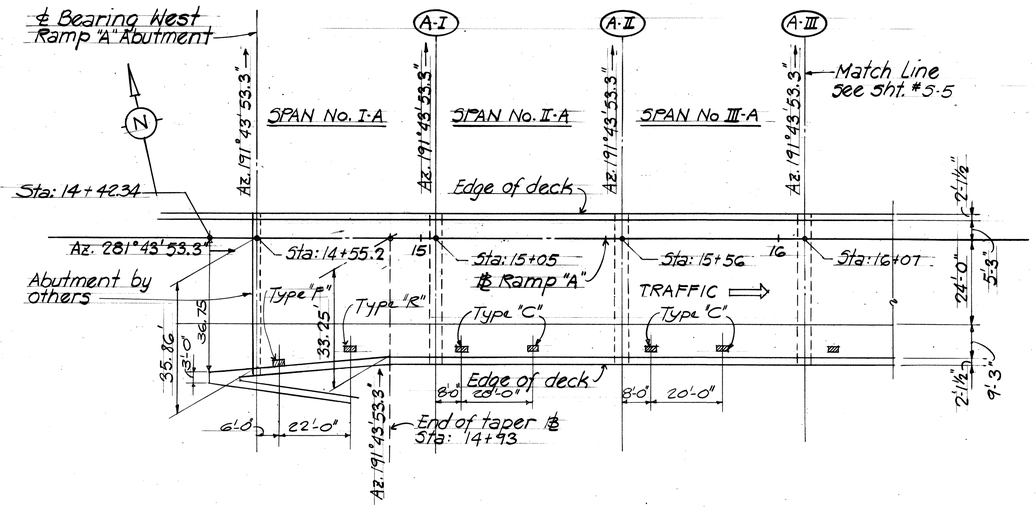

PARTIAL LAYOUT PLAN RAMP "A"

Scale 1" = 20'-0"

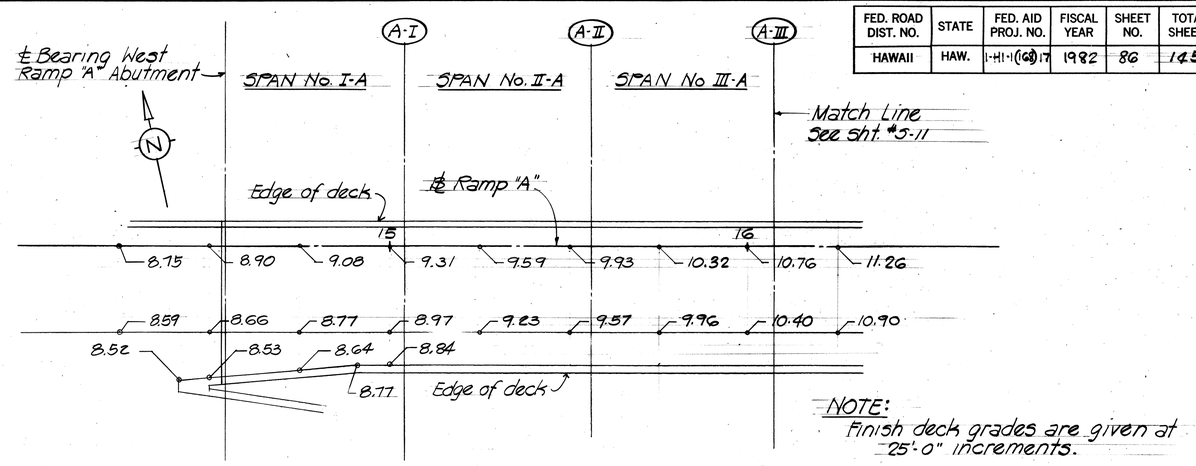

NOTE:
Finish deck grades are given at 25'-0" increments.

PARTIAL DECK FINISH GRID GRADE PLAN RAMP "A"

Scale 1" = 20'-0"

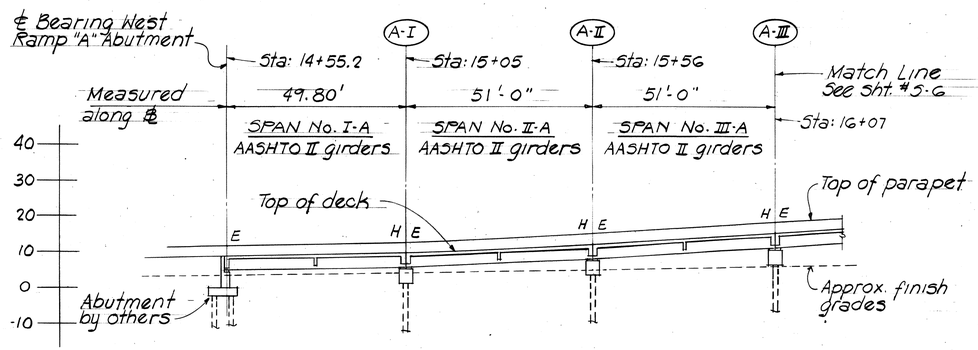

PARTIAL LONGITUDINAL SECTION ℄ RAMP "A"

Scale 1" = 20'-0"

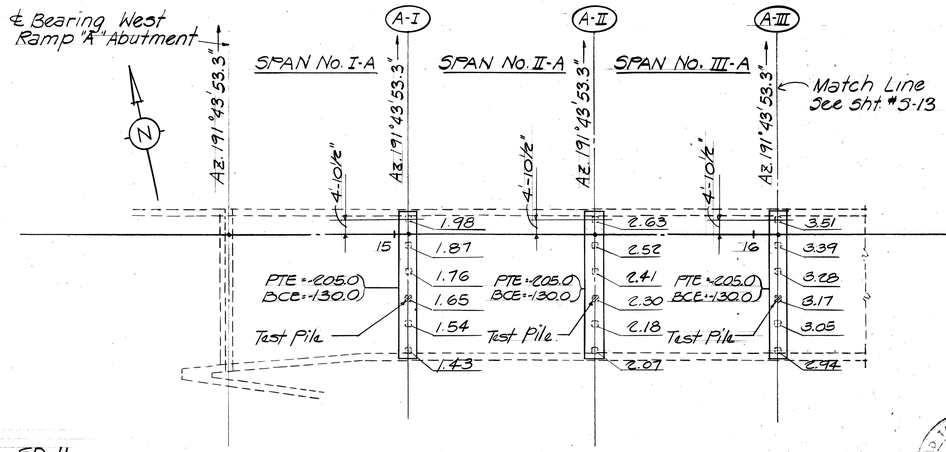

PARTIAL FOUNDATION PLAN RAMP "A"

Scale 1" = 20'-0"

NOTES:

1. Top of concrete deck to follow finish roadway grade, except otherwise noted.
2. ▨ Denotes deck scupper see detail shts. 5-36, 5-41 SD-8 & SD-9
3. Electrical conduit are not shown on plans. See Electrical Drawings.
4. H = Denotes Hinge Bearing
5. E = Denotes Expansion Bearing
6. Top of concrete deck to follow finish roadway grades.
7. For limits of structural excavation and backfill pay limits see shts. 5-20 & 5-35

NOTE:
For Table of Pile Load Tests and Applicable Footings, See sht. no. SD-11

LEGEND

○ Precast Prestressed Concrete Piles, 16½" octagonal, Type "A" Design Capacity 115 tons.

□ Precast Prestressed Concrete Piles, 20" square, Type "B" Design Capacity 85 tons.

PTE = Estimated Pile Tip Elevation
BCE = Elevation of Lower Limits of Bitumen Coating
0.00 = Pile Cut-off Elevations at Piers A-I thru A-III

KEY PLAN

HAROLD TAKASHI MIYAMOTO
REGISTERED PROFESSIONAL ENGINEER
No. 1514
HAWAII U.S.A.

GEORGE K. NISHIMURA
REGISTERED PROFESSIONAL ENGINEER
No. 1388
HAWAII U.S.A.

THIS WORK WAS PREPARED BY ME OR UNDER MY SUPERVISION

THIS WORK WAS PREPARED BY ME OR UNDER MY SUPERVISION

STATE OF HAWAII
DEPARTMENT OF TRANSPORTATION
LAND TRANSPORTATION FACILITIES DIVISION

NIMITZ CONNECTOR (E.B.)
RAMP "A" & RAMP "B"

PARTIAL LAYOUT, FOUNDATION, GRID GRADE PLANS, & LONGITUDINAL SECTION
KEEHI INTERCHANGE
F.A.I. PROJ. No. I-HI-1 (168)17

Scale: 1" = 20'-0" Date: JULY, 1981

SHEET No. 5-4 OF 49 SHEETS

ORIGINAL PLAN | SURVEY PLOTTED BY | DRAWN BY | TRACED BY | DESIGNED BY | QUANTITIES BY | CHECKED BY | DATE | NOTE BOOK No.

FED. ROAD DIST. NO.	STATE	FED. AID PROJ. NO.	FISCAL YEAR	SHEET NO.	TOTAL SHEETS
HAWAII	HAW.	I-HI-1(168)17	1982	87	145

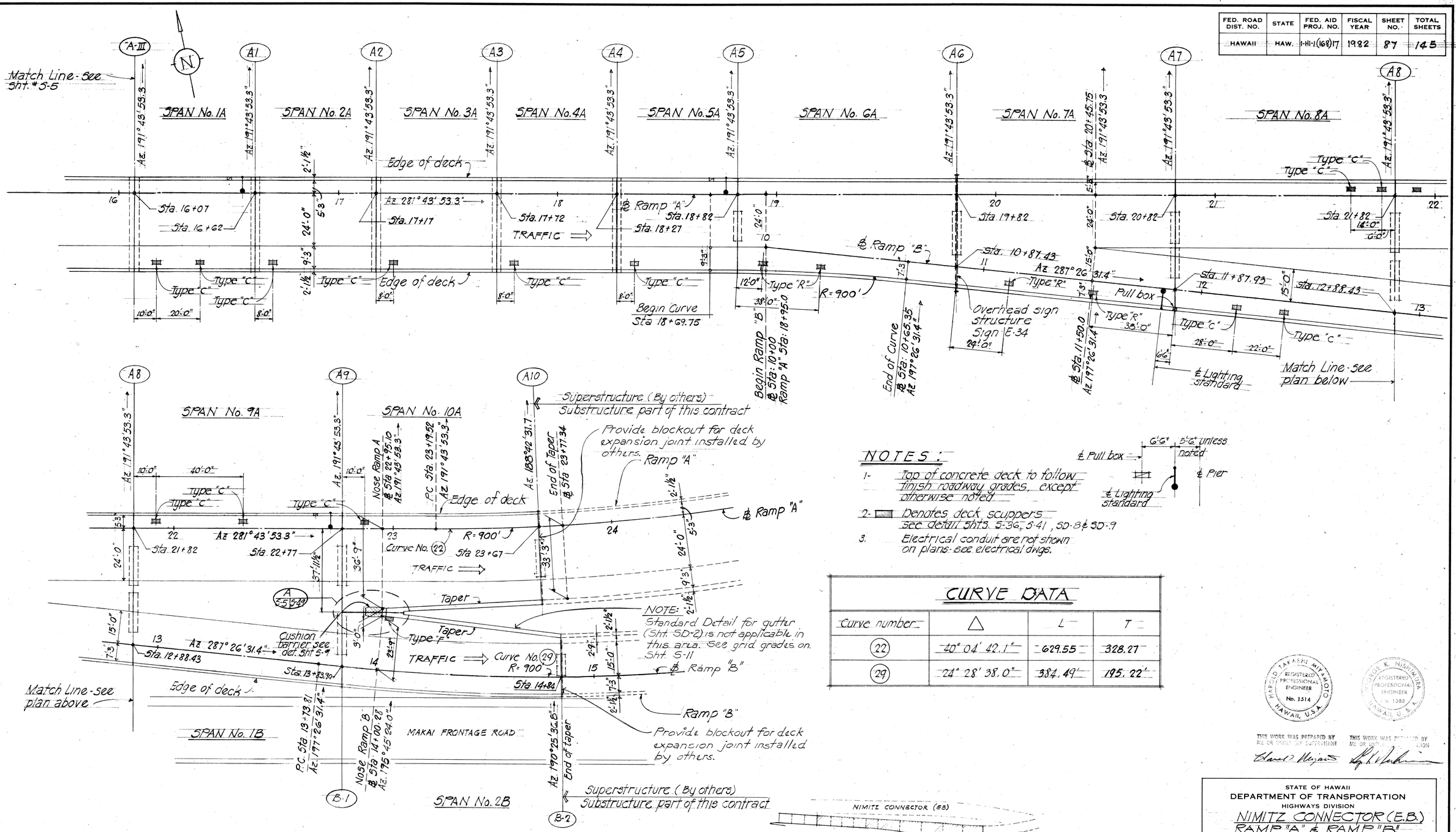

PARTIAL LAYOUT PLAN RAMP "A" & RAMP "B"

Scale 1"=20'-0"

NOTES:

1. Top of concrete deck to follow finish roadway grades, except otherwise noted.
2. ▨ Denotes deck scuppers see detail Sht's. S-36, S-41, SD-8 & SD-9
3. Electrical conduit are not shown on plans - see electrical dwgs.

CURVE DATA

Curve number	△	L	T
22	40° 04' 42.1"	629.55'	328.27'
29	24° 28' 38.0"	384.49'	195.22'

NOTE: Standard Detail for gutter (Sht. SD-2) is not applicable in this area. See grid grades on Sht. S-11

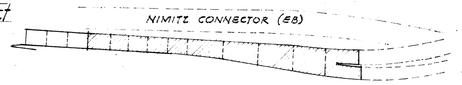

KEY PLAN

HAROLD T. TAKASHI MIYAMOTO REGISTERED PROFESSIONAL ENGINEER No. 1514 HAWAII, U.S.A.

JOSEPH K. NISHIMURA REGISTERED PROFESSIONAL ENGINEER No. 1388 HAWAII, U.S.A.

THIS WORK WAS PREPARED BY ME OR UNDER MY SUPERVISION

THIS WORK WAS PREPARED BY ME OR UNDER MY SUPERVISION

STATE OF HAWAII
DEPARTMENT OF TRANSPORTATION
HIGHWAYS DIVISION

NIMITZ CONNECTOR (E.B.)
RAMP "A" & RAMP "B"

GENERAL LAYOUT PLAN

KEEHI INTERCHANGE

F.A.I. PROJECT NO. I HI-1 (168)17

Scale 1"=20'-0" Date: JULY, 1981

SHEET No. S-5 OF 49 SHEETS

87

ORIGINAL PLAN | SURVEY PLOTTED BY | DRAWN BY | TRACED BY | DESIGNED BY | QUANTITIES BY | CHECKED BY | DATE | NOTE BOOK | No.

PRINTED ON NO. 1000N CLEARPRINT

FED. ROAD DIST. NO.	STATE	FED. AID PROJ. NO.	FISCAL YEAR	SHEET NO.	TOTAL SHEETS
HAWAII	HAW.	HHI-1(168)17	1982	88	145

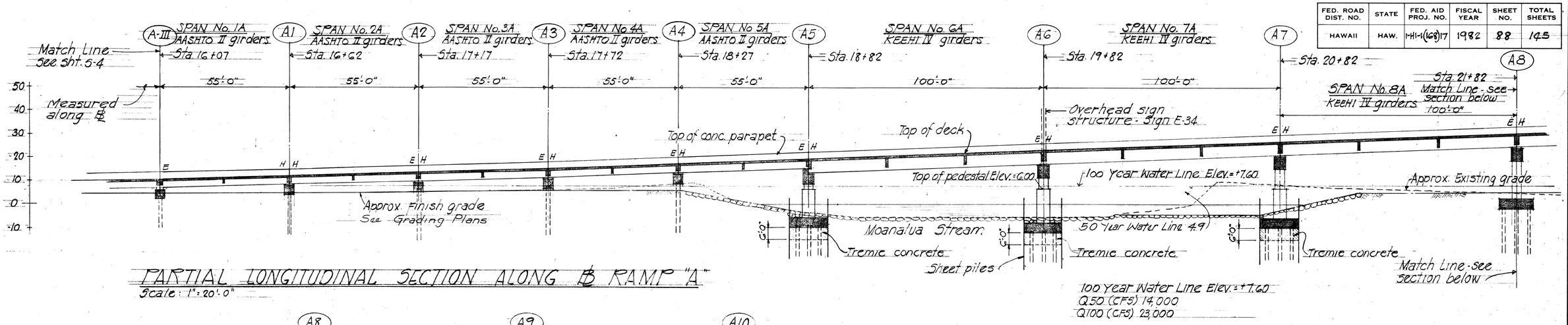

PARTIAL LONGITUDINAL SECTION ALONG ℄ RAMP "A"

Scale: 1" = 20'-0"

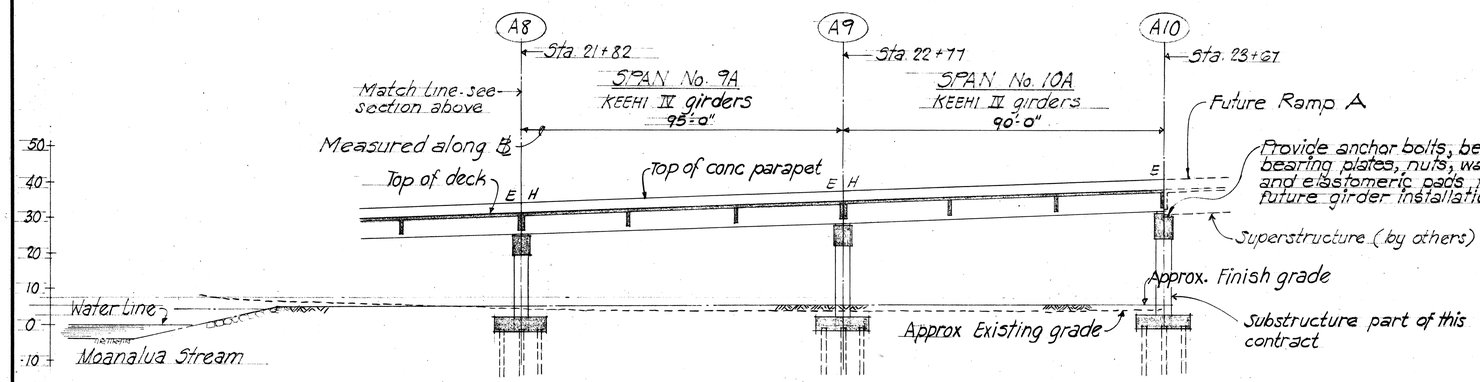

PARTIAL LONGITUDINAL SECTION ALONG ℄ RAMP "A"

Scale: 1" = 20'-0"

NOTES:

1. H = Denotes Hinge Bearing
2. E = Denotes Expansion Bearing
3. Top of concrete deck to follow finish roadway grades
4. For Limits of structural excavation and backfill pay limits see sht. 5-20 & 5-35

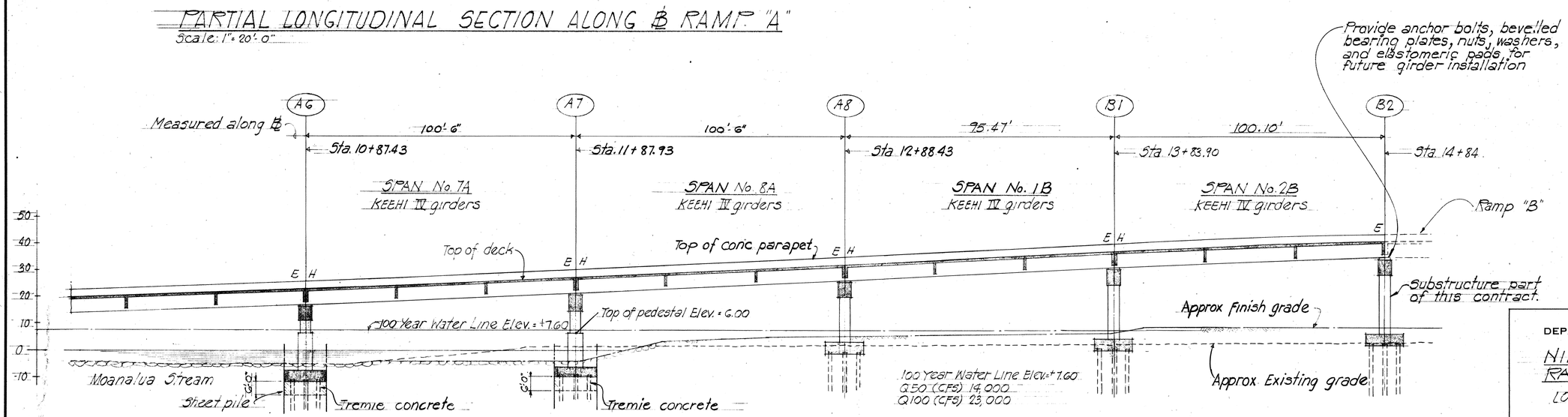

LONGITUDINAL SECTION ALONG ℄ RAMP "B"

Scale: 1" = 20'-0"

HAROLD TAKASHI MIYAMOTO REGISTERED PROFESSIONAL ENGINEER No. 1514 HAWAII, U.S.A.

THIS WORK WAS PREPARED BY ME OR UNDER MY SUPERVISION

THIS WORK WAS PREPARED BY ME OR UNDER MY SUPERVISION

STATE OF HAWAII
DEPARTMENT OF TRANSPORTATION
HIGHWAYS DIVISION

NIMITZ CONNECTOR (E.B.)
RAMP "A" & RAMP "B"
LONGITUDINAL SECTIONS

KEEHI INTERCHANGE
F.A.I. PROJECT NO. I-HI-1 (168)17
Scale: 1" = 20'-0" Date: JULY, 1981

SHEET No. S-6 OF 49 SHEETS

ORIGINAL PLAN | SURVEY PLOTTED BY | DRAWN BY | TRACED BY | DESIGNED BY | QUANTITIES BY | CHECKED BY | DATE | NOTE BOOK | No.

PRINTED ON NO. 1000H CLEARPRINT

FED. ROAD DIST. NO.	STATE	FED. AID PROJ. NO.	FISCAL YEAR	SHEET NO.	TOTAL SHEETS
HAWAII	HAW.	I-H1-1(168)17	1982	89	145

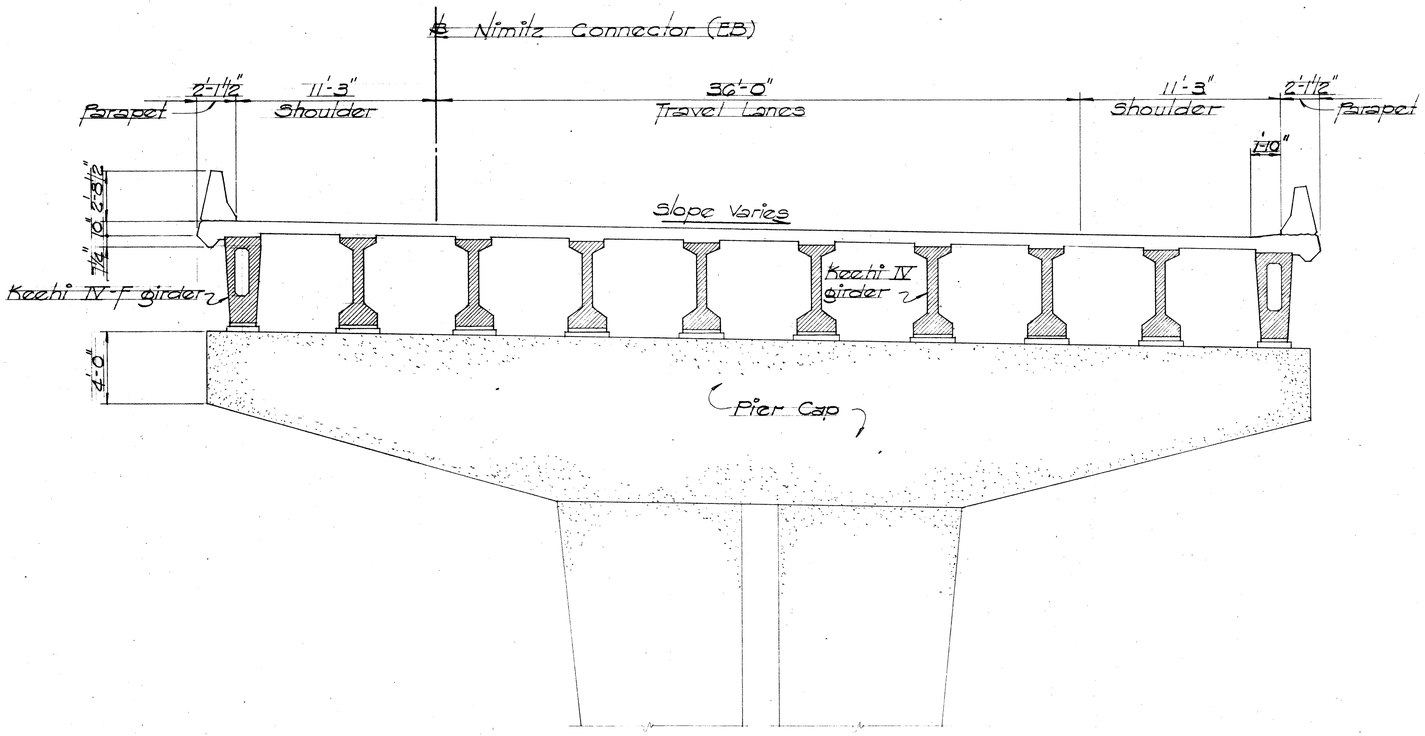

NORMAL SECTION NIMITZ CONNECTION (EB)

Sta. 22 + 94 thru Sta. 30 + 94.36

Scale: 1/4" = 1'-0"

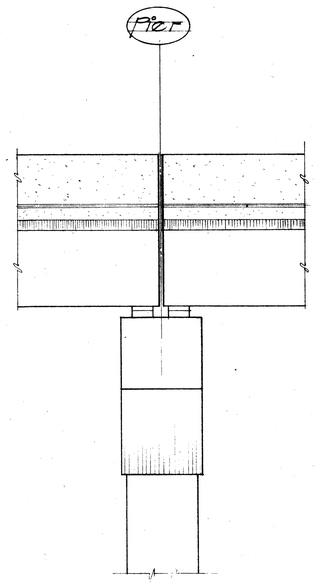

PARTIAL ELEVATION

Scale: 1/4" = 1'-0"

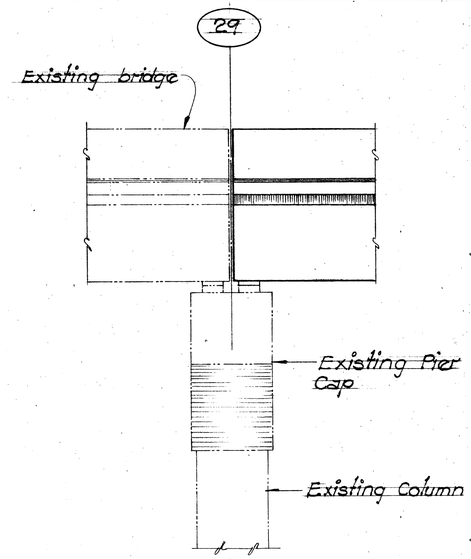

PARTIAL ELEVATION

Scale: 1/4" = 1'-0"

ORIGINAL PLAN	SURVEY PLOTTED BY	DATE
	DRAWN BY	
	TRACED BY	
NOTE BOOK	DESIGNED BY	
	QUANTITIES BY	
NO.	CHECKED BY	

GEORGE K. NISHIMURA REGISTERED PROFESSIONAL ENGINEER No. 1388 HAWAII, U.S.A.

THIS WORK WAS PREPARED BY ME OR UNDER MY SUPERVISION

HAROLD TAKASHI MIYAMOTO REGISTERED PROFESSIONAL ENGINEER No. 1514 HAWAII, U.S.A.

THIS WORK WAS PREPARED BY ME OR UNDER MY SUPERVISION

STATE OF HAWAII
DEPARTMENT OF TRANSPORTATION
HIGHWAYS DIVISION

NIMITZ CONNECTOR (EB)
RAMP "A" AND RAMP "B"

NORMAL SECTION & PARTIAL ELEVATIONS

KEEHI INTERCHANGE
FAI PROJ. NO. I-H1-1(168)17

SCALE: AS SHOWN DATE: JULY 1981

SHEET No. S-7 OF 49 SHEETS

FED. ROAD DIST. NO.	STATE	FED. AID PROJ. NO.	FISCAL YEAR	SHEET NO.	TOTAL SHEETS
HAWAII	HAW.	I-HI-1(168)17	1982	90	145

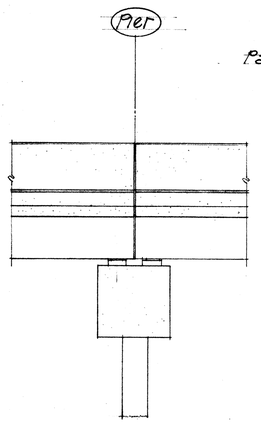

PARTIAL ELEVATION
Scale 1/4"=1'-0"

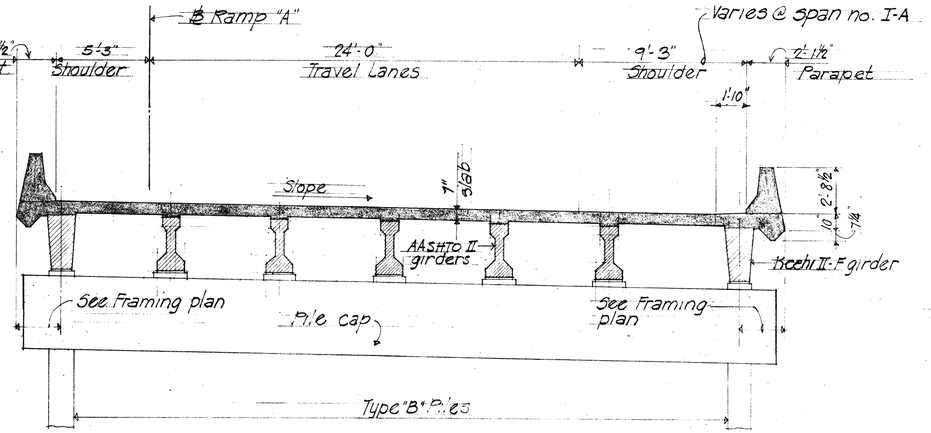

NORMAL SECTION Sta. 14+55.2 thru Sta. 18+82
Scale 1/4"=1'-0"

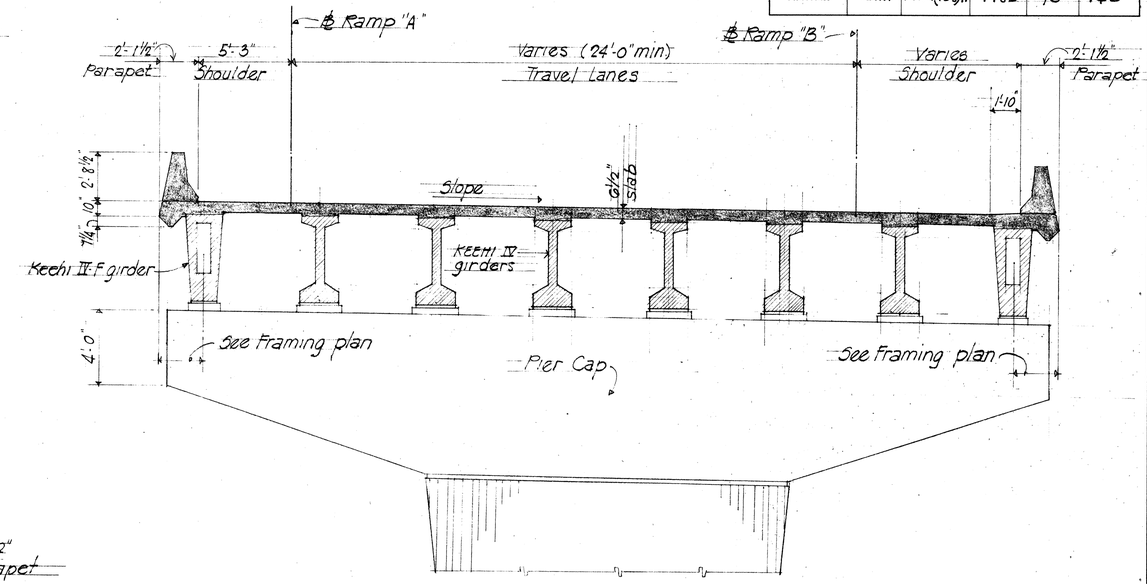

NORMAL SECTION Sta. 18+82 thru Sta. 20+45.75
Scale 1/4"=1'-0"

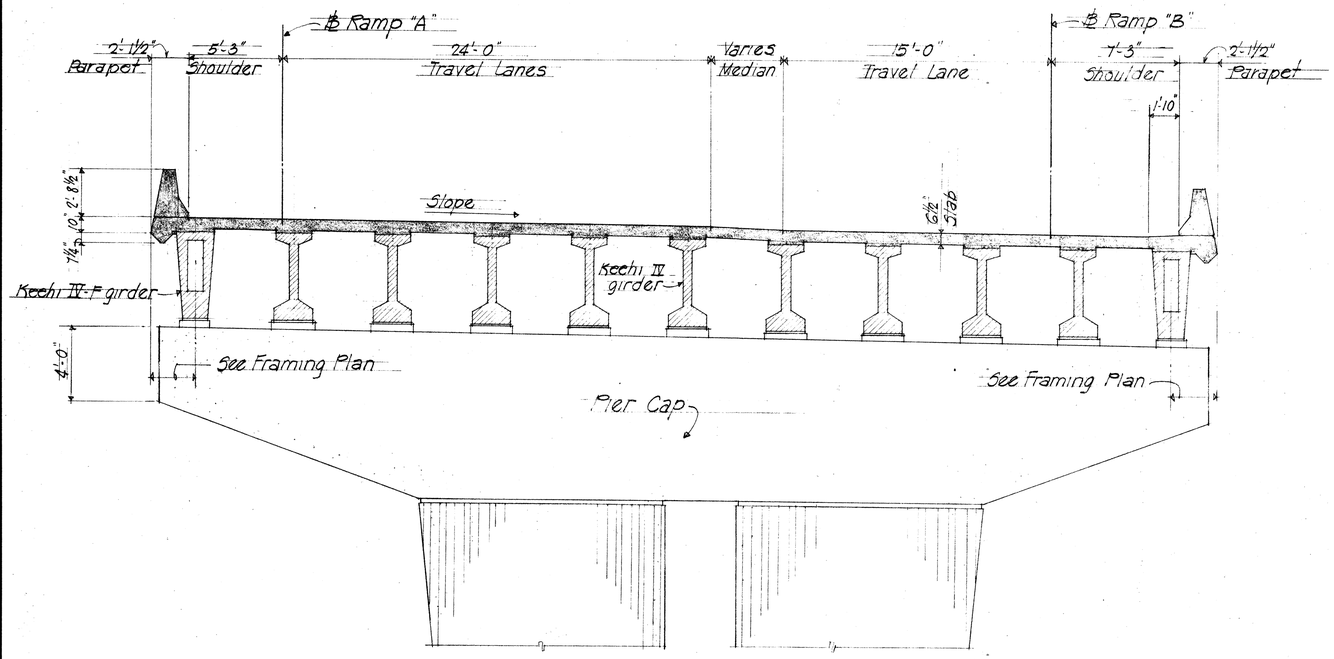

NORMAL SECTION Sta. 20+45.75 thru Sta. 22+77
Scale 1/4"=1'-0"

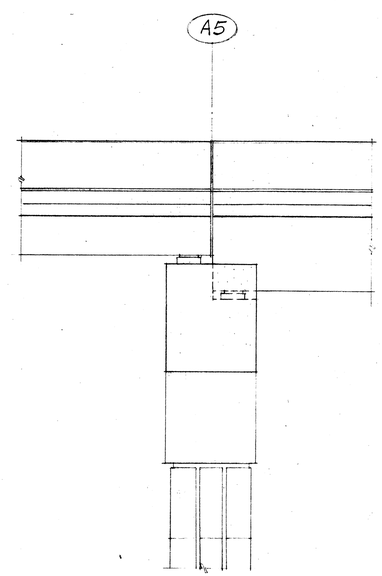

PARTIAL ELEVATION @ GIRDER TRANSITION
Scale 1/4"=1'-0"

HAROLD TAKASHI MIYAMOTO REGISTERED PROFESSIONAL ENGINEER No. 1514 HAWAII, U.S.A.

GEORGE K. HIGASHIGAWA REGISTERED PROFESSIONAL ENGINEER HAWAII, U.S.A.

THIS WORK WAS PREPARED BY ME OR UNDER MY SUPERVISION

THIS WORK WAS PREPARED BY ME OR UNDER MY SUPERVISION

STATE OF HAWAII
DEPARTMENT OF TRANSPORTATION
HIGHWAYS DIVISION

NIMITZ CONNECTOR (E.B.),
RAMP "A" & RAMP "B"
NORMAL SECTION & PARTIAL ELEVATION

KEEHI INTERCHANGE
F.A.I. PROJECT NO. I-HI-1 (168)17
Scale 1/4"=1'-0" Date JULY, 1981

SHEET No. S-8 OF 49 SHEETS

ORIGINAL PLAN	SURVEY PLOTTED BY	DATE
	DRAWN BY	
	TRACED BY	
NOTE BOOK	DESIGNED BY	
	QUANTITIES BY	
No.	CHECKED BY	

PRINTED ON NO. 1000H CLEARPRINT

FED. ROAD DIST. NO.	STATE	FED. AID PROJ. NO.	FISCAL YEAR	SHEET NO.	TOTAL SHEETS
HAWAII	HAW.	I-HI-1(168)17	1982	91	145

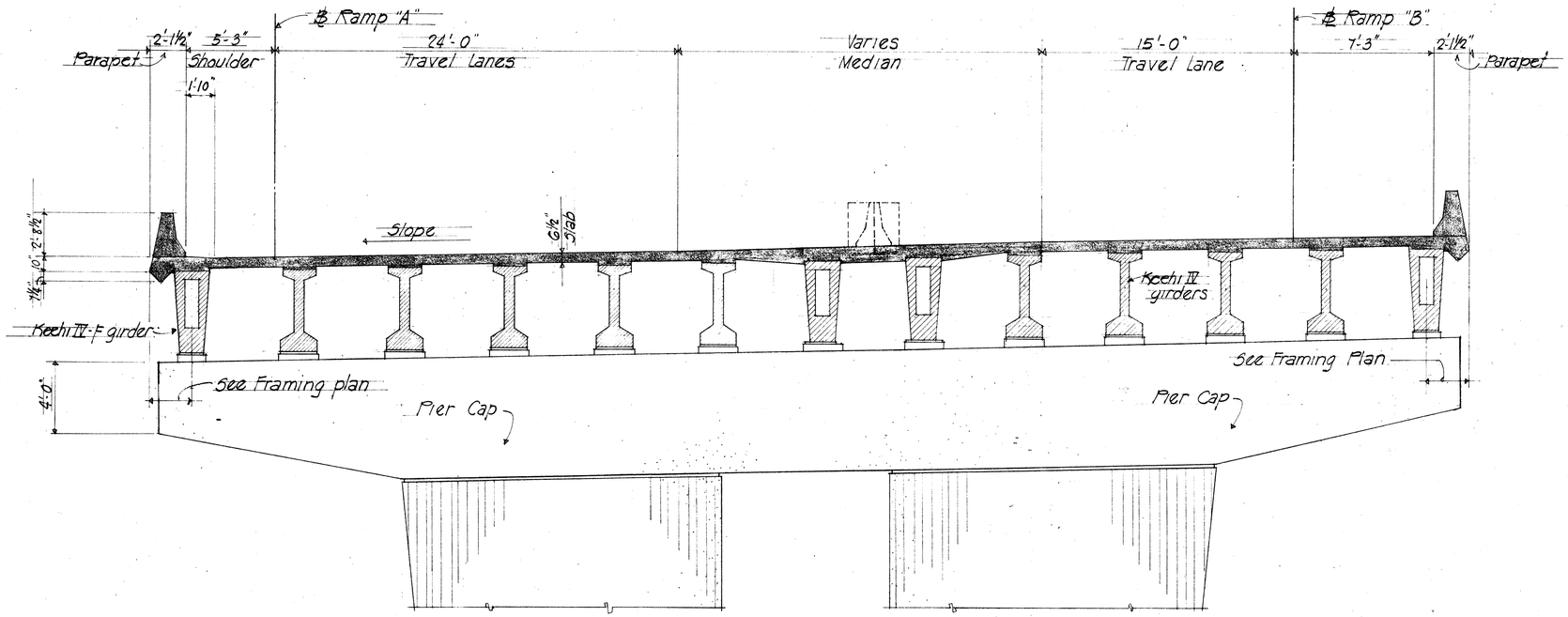

NORMAL SECTION - Sta. 22+77 (Ramp A) @ Exp. JT.
Scale 1/4" = 1'-0"

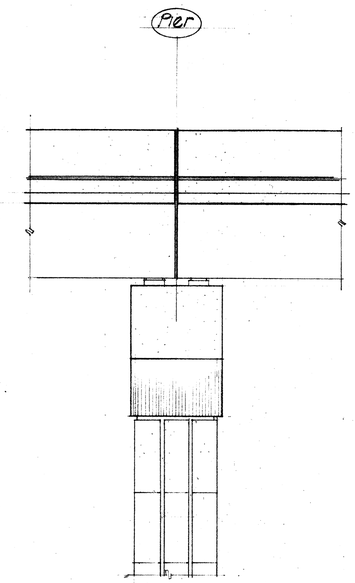

PARTIAL ELEVATION @ PIERS
Scale 1/4" = 1'-0"

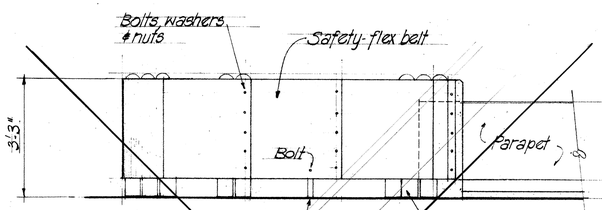

ELEVATION

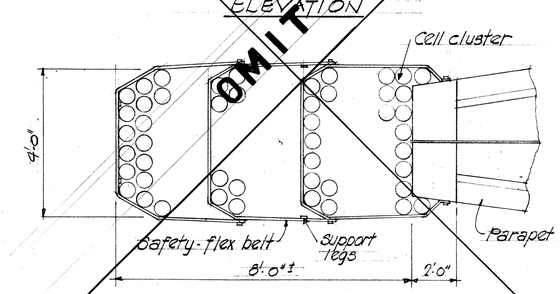

PLAN

CUSHION BARRIER DETAIL (Cell Cluster)
Scale 1/2" = 1'-0"

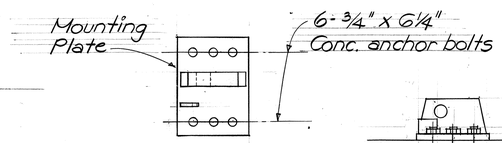

PLAN
Scale: 1½" = 1'-0"

ELEVATION
Scale: 1½" = 1'-0"

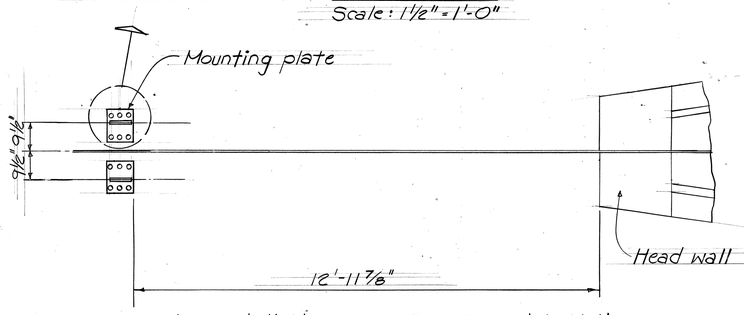

Note: Install Narrow, 5-Bay Sandwich Unit, Model No. 111307555.

CUSHION BARRIER DETAIL
Scale: 1/2" = 1'-0"

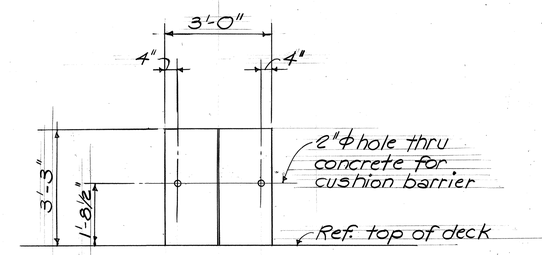

HEAD WALL ELEVATION
Scale: 1/2" = 1'-0"

No.	Date	Revision
1	12/22/82	Revise headwall for cushion barrier.

THIS WORK WAS PREPARED BY ME OR UNDER MY SUPERVISION
HAROLD TAKASHI MIYAMOTO, REGISTERED PROFESSIONAL ENGINEER No. 3514, HAWAII, U.S.A.

THIS WORK WAS PREPARED BY ME OR UNDER MY SUPERVISION
PROFESSIONAL ENGINEER No. 1388, HAWAII, U.S.A.

STATE OF HAWAII
DEPARTMENT OF TRANSPORTATION
HIGHWAYS DIVISION

NIMITZ CONNECTOR (E.B)
RAMP "A" & RAMP "B"
NORMAL SECTION & PARTIAL ELEVATION

KEEHI INTERCHANGE
F.A.I. PROJECT NO. I-HI-1 (168)17
Scale 1/4" = 1'-0" Date: JULY 1981

SHEET No. 5-9 OF 49 SHEETS

C.091

ORIGINAL PLAN	SURVEY PLOTTED BY	DATE
	DRAWN BY	
	TRACED BY	
NOTE BOOK	DESIGNED BY	
	QUANTITIES BY	
No.	CHECKED BY	

PRINTED ON NO. 1000H CLEARPRINT

FED. ROAD DIST. NO.	STATE	FED. AID PROJ. NO.	FISCAL YEAR	SHEET NO.	TOTAL SHEETS
HAWAII	HAW.	I-H1-1(168)17	1982	92	145

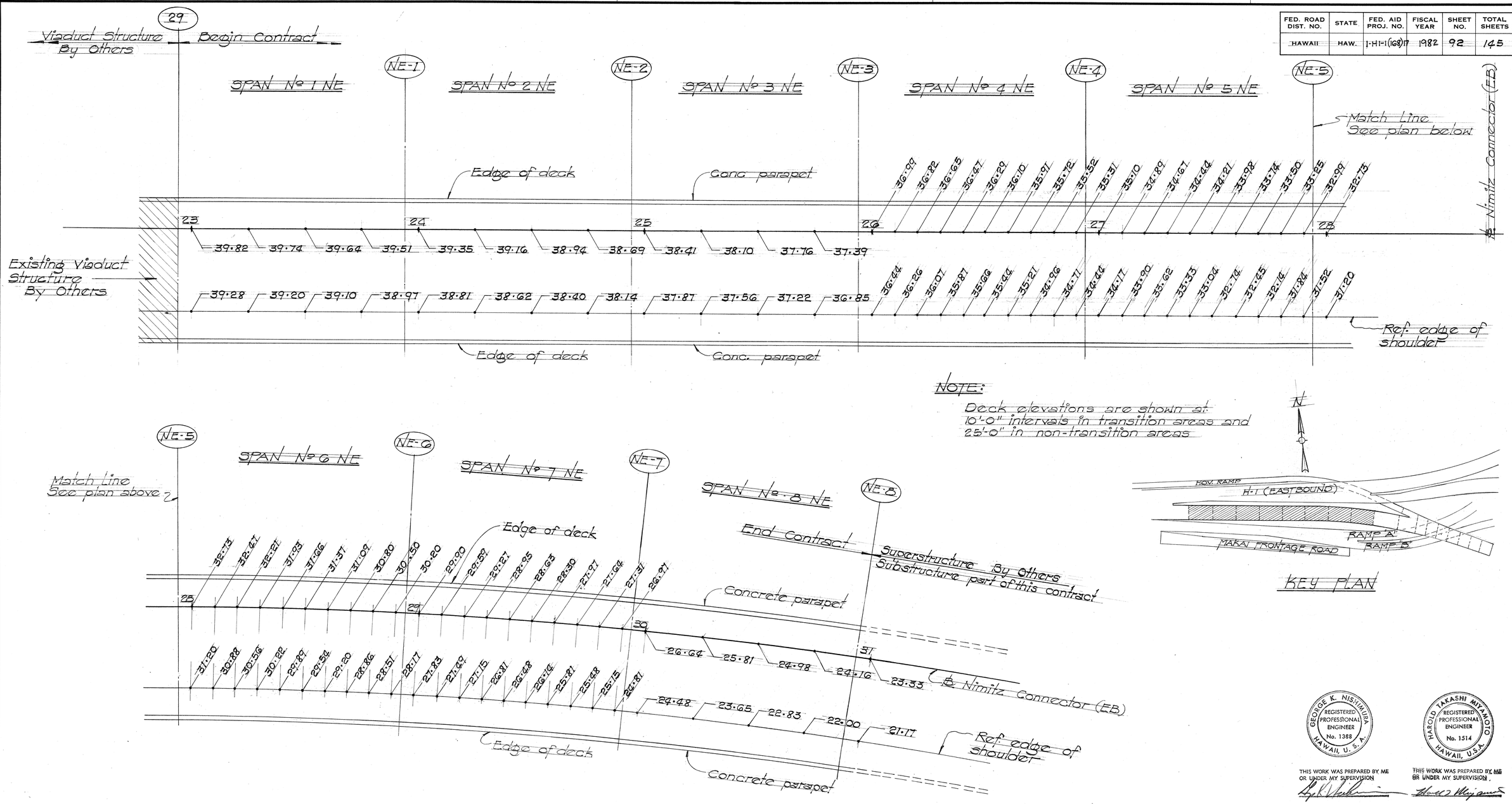

NOTE:

Deck elevations are shown at 10'-0" intervals in transition areas and 25'-0" in non-transition areas

KEY PLAN

DECK FINISH GRID GRADE PLAN NIMITZ CONNECTOR (EB)

Scale: 1" = 20'-0"

GEORGE K. NISHIMURA REGISTERED PROFESSIONAL ENGINEER No. 1388 HAWAII, U.S.A.

THIS WORK WAS PREPARED BY ME OR UNDER MY SUPERVISION

HAROLD TAKASHI MIYAMOTO REGISTERED PROFESSIONAL ENGINEER No. 1514 HAWAII, U.S.A.

THIS WORK WAS PREPARED BY ME OR UNDER MY SUPERVISION

STATE OF HAWAII
DEPARTMENT OF TRANSPORTATION
HIGHWAYS DIVISION

NIMITZ CONNECTOR (EB)
RAMP "A" AND RAMP "B"

DECK FINISH GRID GRADE PLAN

KEEHI INTERCHANGE
F.A.I. PROJ. NO. I-H1-1(168)17

SCALE: 1" = 20'-0" DATE: JULY, 1981

SHEET No. S-10 OF 49 SHEETS

ORIGINAL PLAN		DATE
	SURVEY PLOTTED BY	
	DRAWN BY	
	TRACED BY	
NOTE BOOK	DESIGNED BY	
	QUANTITIES BY	
No.	CHECKED BY	

FED. ROAD DIST. NO.	STATE	FED. AID PROJ. NO.	FISCAL YEAR	SHEET NO.	TOTAL SHEETS
HAWAII	HAW.	I-HI-1(168)17	1982	93	145

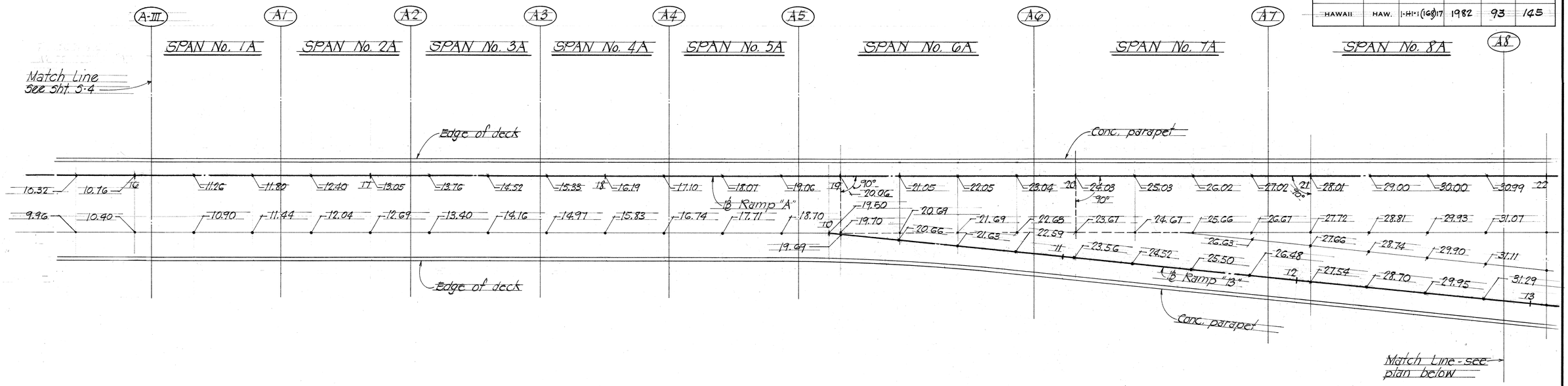

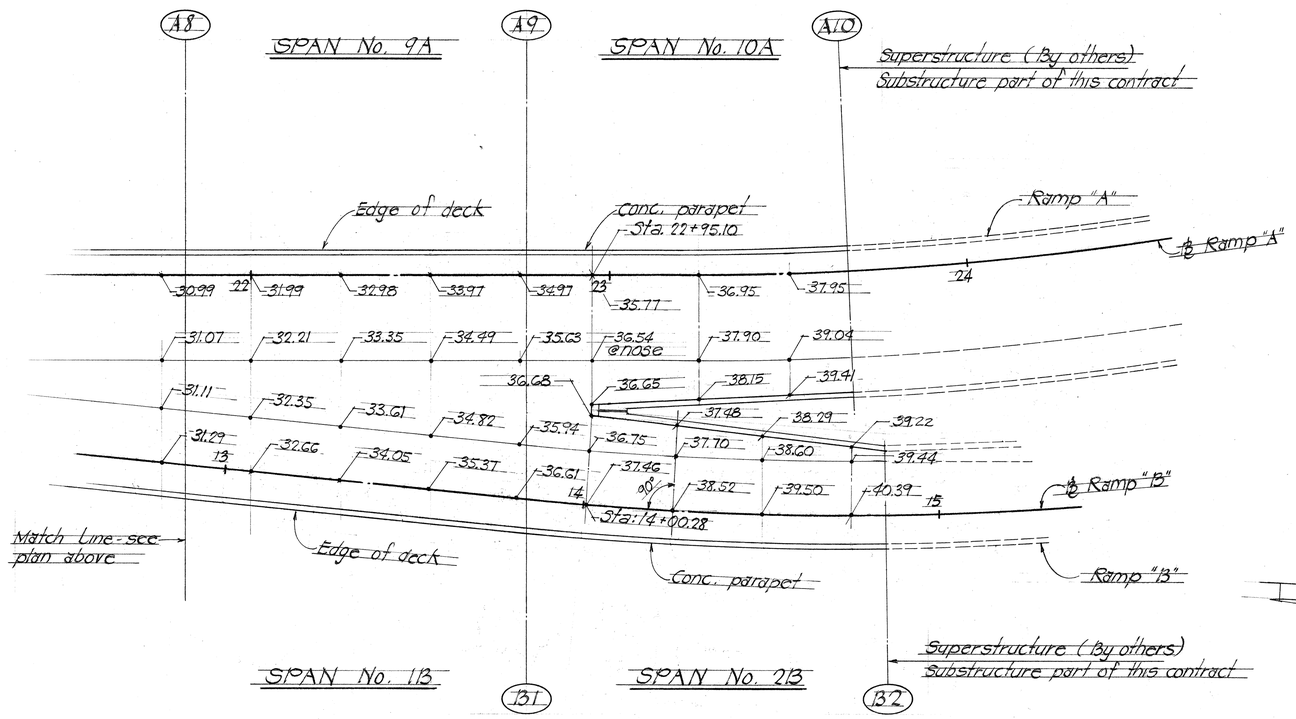

NOTE: Finish deck grades are given at 25'-0" increments.

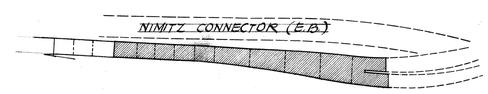

KEY PLAN

HAROLD TAKASHI MIYAMOTO REGISTERED PROFESSIONAL ENGINEER No. 3514 HAWAII, U.S.A.

THIS WORK WAS PREPARED BY ME OR UNDER MY SUPERVISION

GEORGE K. NISHIMURA REGISTERED PROFESSIONAL ENGINEER No. 1388 HAWAII, U.S.A.

THIS WORK WAS PREPARED BY ME OR UNDER MY SUPERVISION

STATE OF HAWAII
DEPARTMENT OF TRANSPORTATION
HIGHWAYS DIVISION

NIMITZ CONNECTOR (E.B.), RAMP "A" & RAMP "B"
PARTIAL FINISH GRID GRADE PLAN
KEEHI INTERCHANGE
F.A.I. PROJECT No. I HI-1
Scale: 1" = 20'-0" Date: July, 1981

SHEET No. S-11 OF 49 SHEETS

ORIGINAL PLAN	SURVEY PLOTTED BY	DATE
	DRAWN BY	
	TRACED BY	
NOTE BOOK	DESIGNED BY	
	QUANTITIES BY	
No.	CHECKED BY	

PRINTED ON NO. 1000H CLEARPRINT

PARTIAL DECK FINISH GRID GRADE PLAN

Scale 1" = 20'-0"

FED. ROAD DIST. NO.	STATE	FED. AID PROJ. NO.	FISCAL YEAR	SHEET NO.	TOTAL SHEETS
HAWAII	HAW.	I-HI-1(168)17	1982	94	145

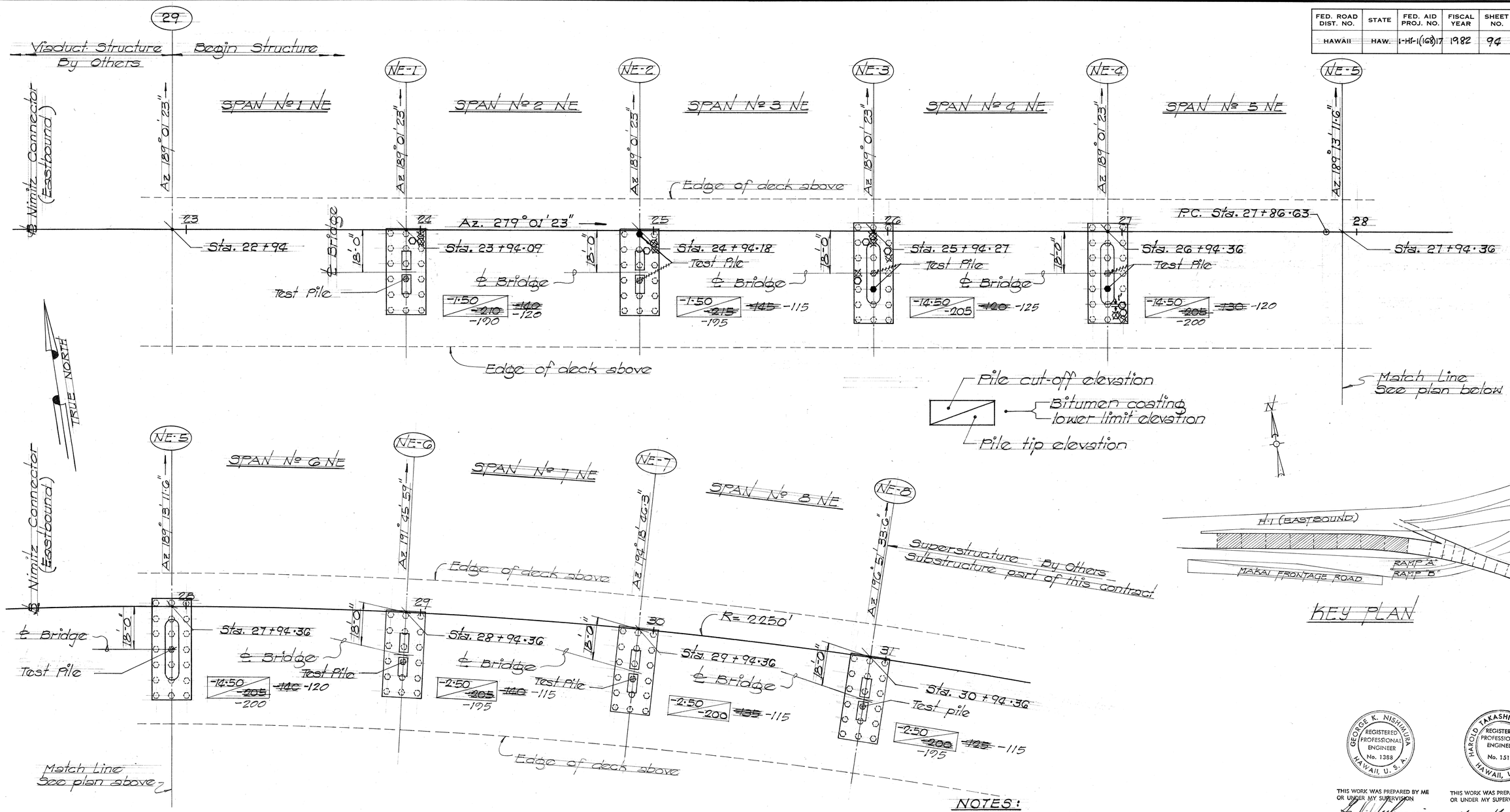

FOUNDATION PLAN NIMITZ CONNECTOR (EB)

Scale: 1" = 10'-0"

NOTES:

1. Type "A" piles in pile caps NE-1 thru NE-8 inclusive. See Sht. Nos. SD-10 thru SD-12.
2. For pile plan spacing See Sht. No. S-19.
3. Contractor shall verify location of existing utilities before starting excavation.
4. For excavation payment limits, See Sht. No. S-35

GEORGE K. NISHIMURA REGISTERED PROFESSIONAL ENGINEER No. 1388 HAWAII, U.S.A.

THIS WORK WAS PREPARED BY ME OR UNDER MY SUPERVISION

HAROLD TAKASHI MIYAMOTO REGISTERED PROFESSIONAL ENGINEER No. 1514 HAWAII, U.S.A.

THIS WORK WAS PREPARED BY ME OR UNDER MY SUPERVISION

STATE OF HAWAII
DEPARTMENT OF TRANSPORTATION
HIGHWAYS DIVISION

NIMITZ CONNECTOR (EB)
RAMP "A" AND RAMP "B"
FOUNDATION PLAN

KEEHI INTERCHANGE
FAI PROJ NO I-HI-1(168)17

SCALE: 1" = 20'-0" DATE: JULY, 1981

ORIGINAL PLAN | SURVEY PLOTTED BY | DRAWN BY | TRACED BY | NOTE BOOK | DESIGNED BY | QUANTITIES BY | CHECKED BY | No. | DATE

FED. ROAD DIST. NO.	STATE	FED. AID PROJ. NO.	FISCAL YEAR	SHEET NO.	TOTAL SHEETS
HAWAII	HAW.	I-HI-I(168)17	1982	95	145

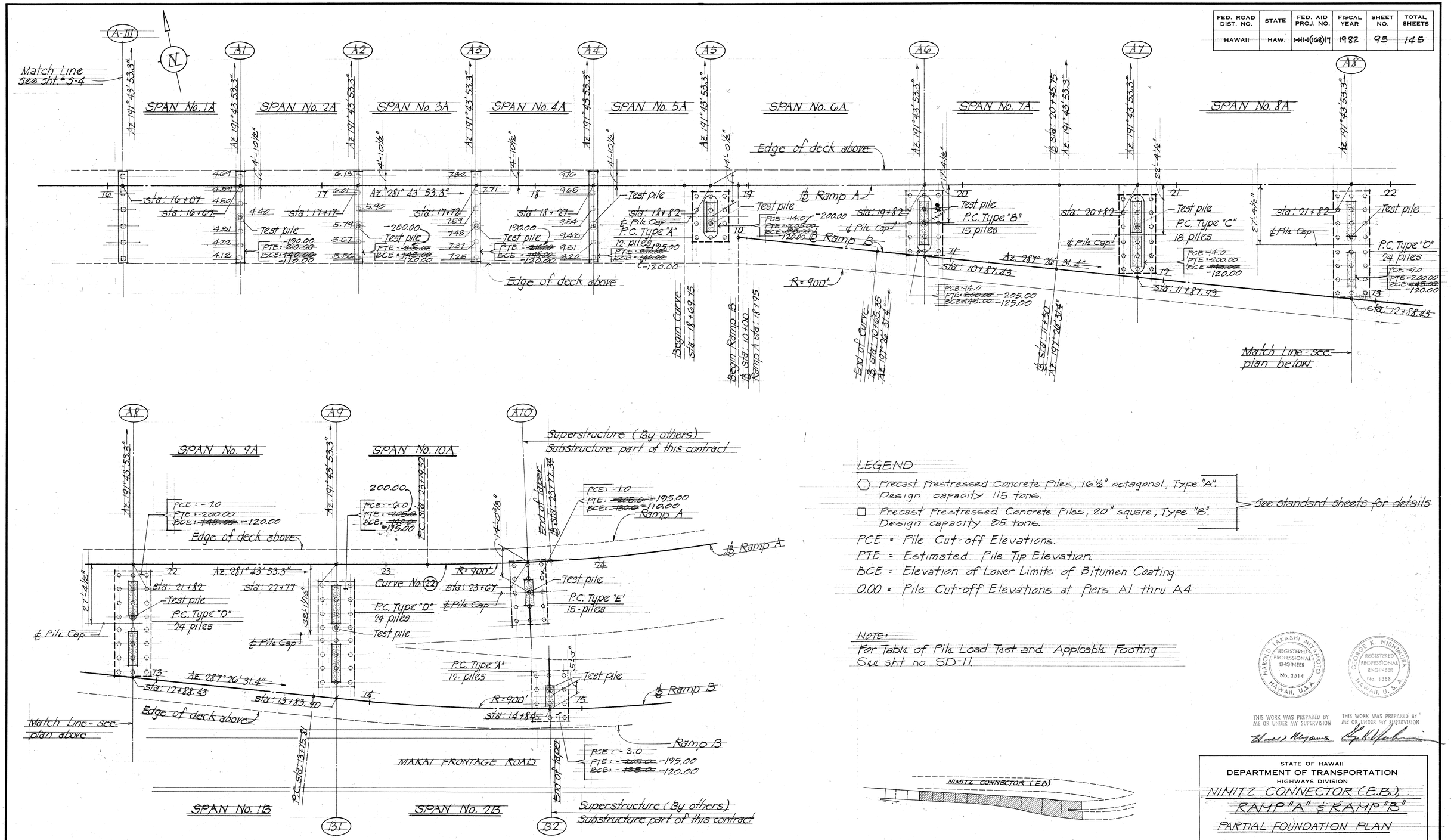

PARTIAL FOUNDATION PLAN ~ RAMP "A" & RAMP "B"

Scale 1" = 20'-0"

LEGEND

⬡ Precast Prestressed Concrete Piles, 16½" octagonal, Type "A". Design capacity 115 tons.

□ Precast Prestressed Concrete Piles, 20" square, Type "B". Design capacity 85 tons.

} See standard sheets for details

PCE = Pile Cut-off Elevations.

PTE = Estimated Pile Tip Elevation.

BCE = Elevation of Lower Limits of Bitumen Coating.

0.00 = Pile Cut-off Elevations at Piers A1 thru A4

NOTE:

For Table of Pile Load Test and Applicable Footing See sht. no. SD-11.

KEY PLAN

HAROLD TAKASHI MIYAMOTO
REGISTERED PROFESSIONAL ENGINEER
No. 3514
HAWAII, U.S.A.

GEORGE K. NISHIMURA
REGISTERED PROFESSIONAL ENGINEER
No. 1388
HAWAII, U.S.A.

THIS WORK WAS PREPARED BY ME OR UNDER MY SUPERVISION

THIS WORK WAS PREPARED BY ME OR UNDER MY SUPERVISION

STATE OF HAWAII
DEPARTMENT OF TRANSPORTATION
HIGHWAYS DIVISION

NIMITZ CONNECTOR (E.B.), RAMP "A" & RAMP "B"

PARTIAL FOUNDATION PLAN

KEEHI INTERCHANGE

F.A.I. PROJECT NO. I HI-I (168)17

Scale 1" = 20'-0" Date: JULY, 1981

SHEET No. S-13 OF 49 SHEETS

95

ORIGINAL PLAN	SURVEY PLOTTED BY	DATE
	DRAWN BY	
	TRACED BY	
NOTE BOOK	DESIGNED BY	
	QUANTITIES BY	
No.	CHECKED BY	

PRINTED ON NO. 1000H CLEARPRINT

FED. ROAD DIST. NO.	STATE	FED. AID PROJ. NO.	FISCAL YEAR	SHEET NO.	TOTAL SHEETS
HAWAII	HAW.	I-H1-1(168)17	1982	96	145

PIER MARK	BRNG LINE	TOP OF SEAT ELEVATIONS G-1	G-2	G-3	G-4	G-5	G-6	G-7	G-8	G-9	G-10	PIER CAP ELEVATION LEFT	RIGHT	TOP OF COL. ELEV. (a)	(b)	(c)	(d)
NE-1	B	33.65	33.57	33.47	33.38	33.28	33.18	33.09	32.99	32.89	32.79	33.31	32.38	24.01	23.86	23.83	23.68
	A	33.64	33.56	33.46	33.36	33.27	33.17	33.08	32.98	32.88	32.77						
NE-2	B	32.73	32.64	32.55	32.45	32.35	32.26	32.16	32.06	31.97	31.86	32.39	31.46	23.09	22.94	22.91	22.76
	A	32.75	32.67	32.57	32.48	32.38	32.28	32.19	32.09	32.00	31.89						

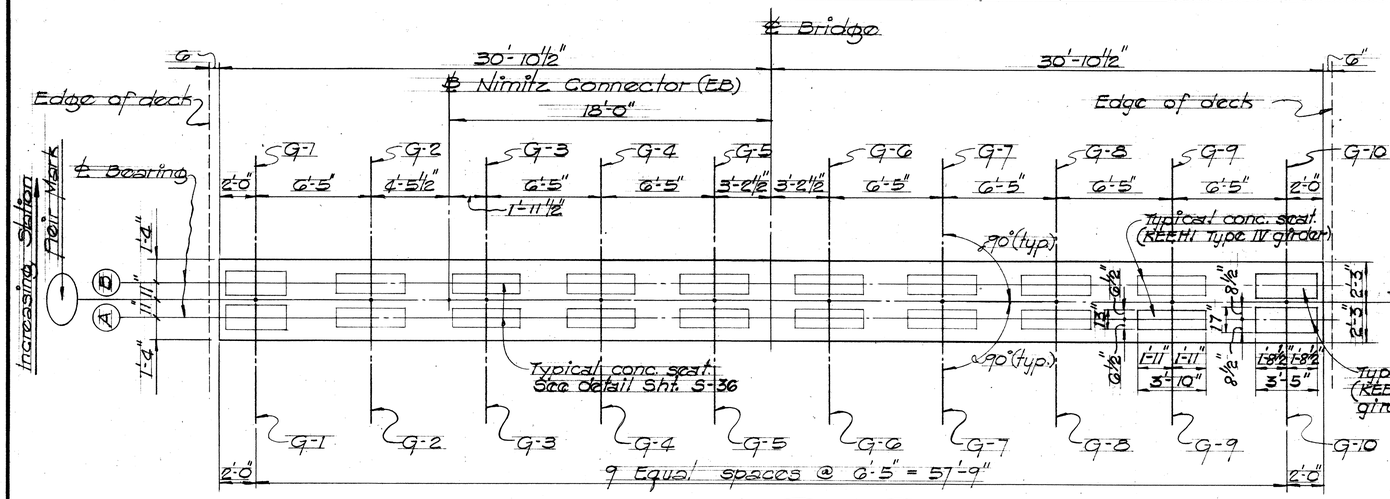

PLAN ~ PIERS (NE-1) & (NE-2)

Scale: 1/4" = 1'-0"

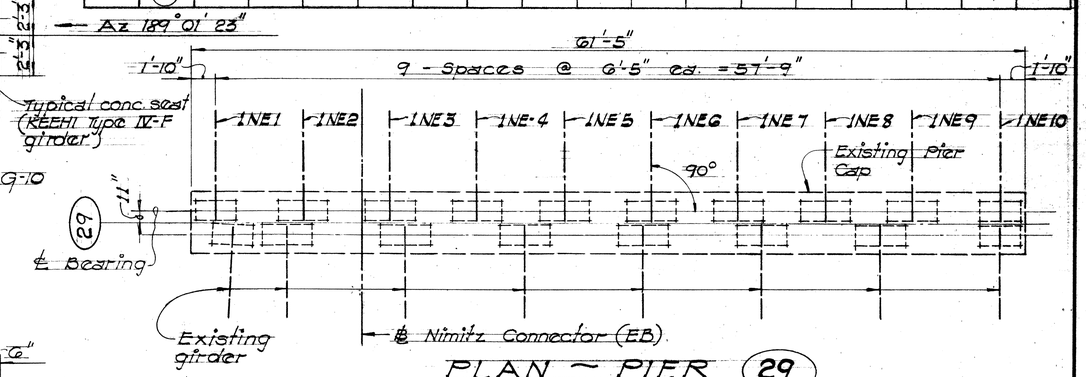

PLAN ~ PIER (29)

3/16" = 1'-0"

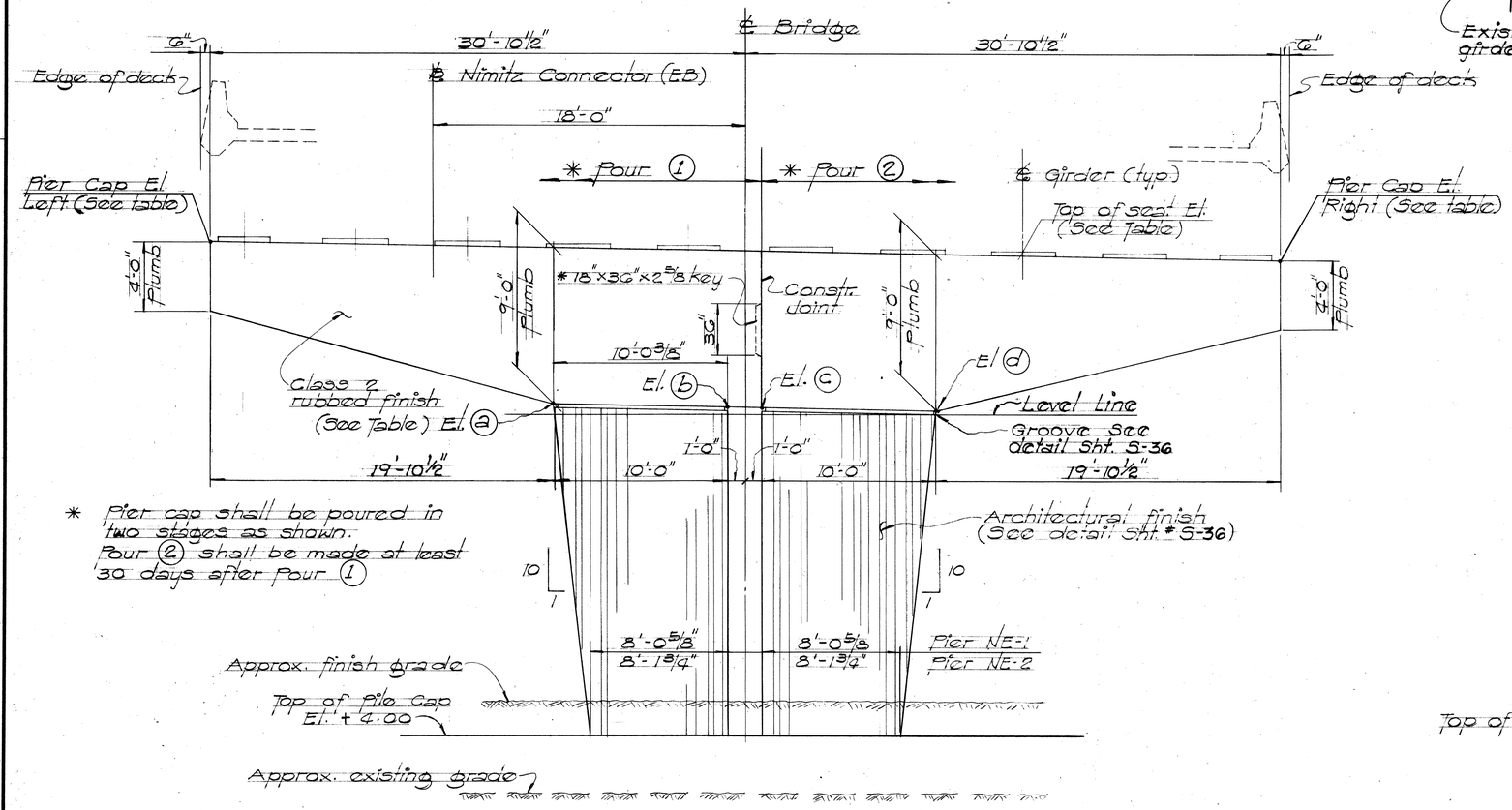

* Pier cap shall be poured in two stages as shown. Pour (2) shall be made at least 30 days after Pour (1)

ELEVATION ~ PIERS (NE-1) & (NE-2)

TOWARDS INCREASING STATION

Scale: 1/4" = 1'-0"

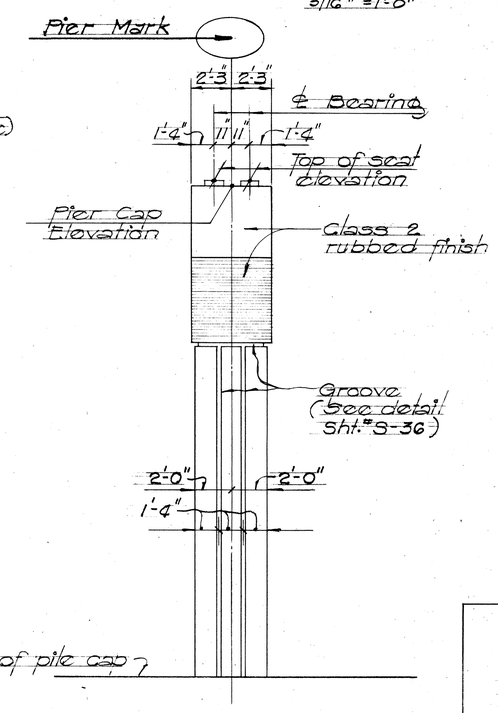

END ELEVATION

Scale: 1/4" = 1'-0"

GEORGE K. NISHIMURA REGISTERED PROFESSIONAL ENGINEER No. 1388 HAWAII, U.S.A.

THIS WORK WAS PREPARED BY ME OR UNDER MY SUPERVISION

HAROLD TAKASHI MIYAMOTO REGISTERED PROFESSIONAL ENGINEER No. 1514 HAWAII, U.S.A.

THIS WORK WAS PREPARED BY ME OR UNDER MY SUPERVISION

STATE OF HAWAII
DEPARTMENT OF TRANSPORTATION
HIGHWAYS DIVISION

NIMITZ CONNECTOR (EB)
RAMP "A" AND RAMP "B"
PIERS NE-1, NE-2, PLAN & ELEVATION

KEEHI INTERCHANGE
FAI. PROJ. NO. I-H1-1(168)17

SCALE: AS SHOWN DATE: JULY, 1981

SHEET No. S-14 OF 49 SHEETS

ORIGINAL PLAN	SURVEY PLOTTED BY	DATE
	DRAWN BY	
	TRACED BY	
NOTE BOOK	DESIGNED BY	
	QUANTITIES BY	
No.	CHECKED BY	

FED. ROAD DIST. NO.	STATE	FED. AID PROJ. NO.	FISCAL YEAR	SHEET NO.	TOTAL SHEETS
HAWAII	HAW.	I-H-1(168)17	1982	97	145

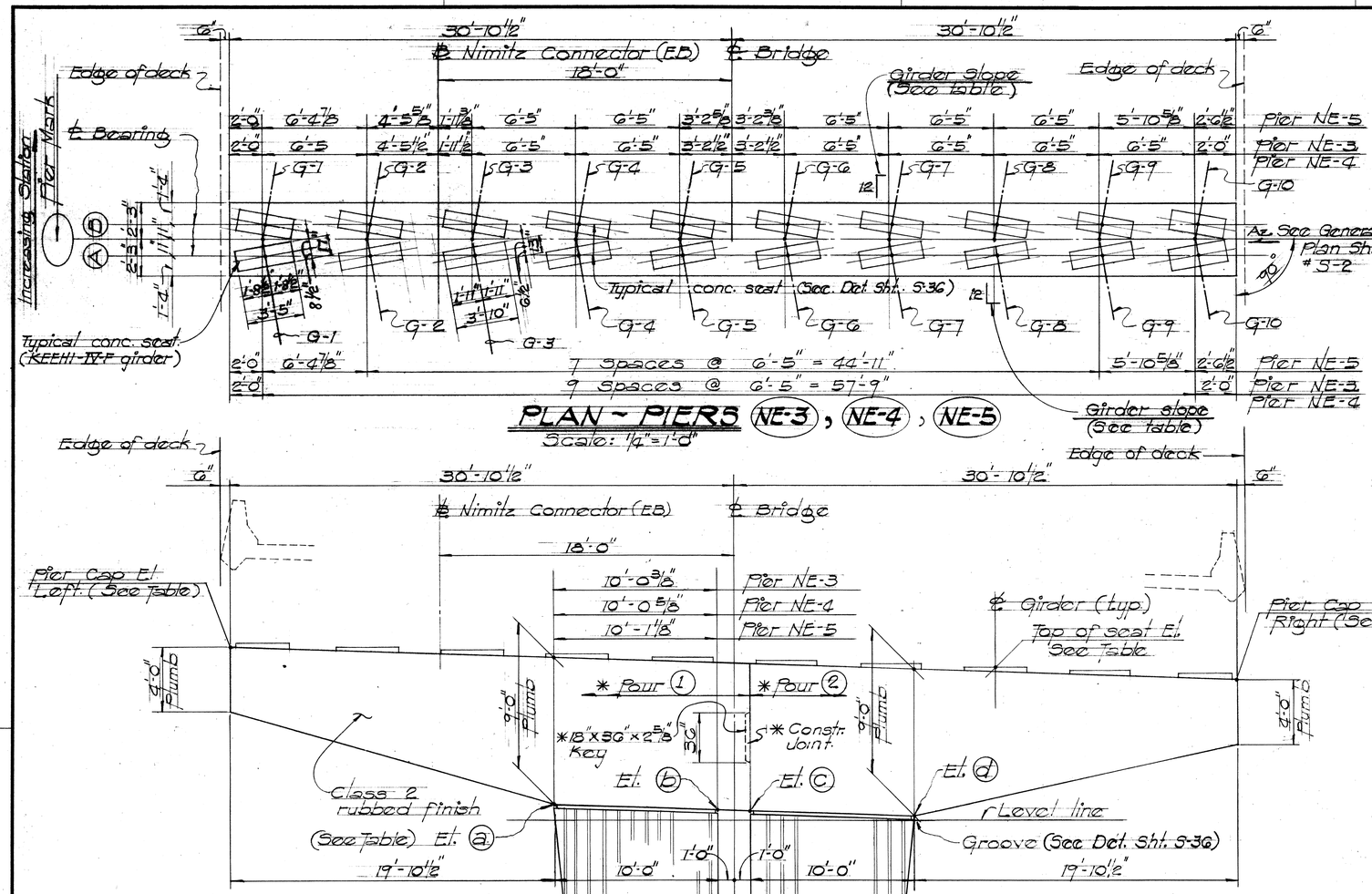

PLAN ~ PIERS (NE-3), (NE-4), (NE-5)

Scale: 1/4"=1'-0"

PIER MARK	BRNG LINE	TOP OF SEAT ELEVATIONS G-1	G-2	G-3	G-4	G-5	G-6	G-7	G-8	G-9	G-10	PIER CAP ELEV. LEFT	RIGHT	TOP OF COL. ELEV. ⓐ	ⓑ	ⓒ	ⓓ
NE-3	B	31.33	31.25	31.16	31.07	30.98	30.89	30.80	30.71	30.62	30.52	30.99	30.72	21.11	21.37	21.54	21.60
	A	31.37	31.28	31.18	31.09	30.99	30.89	30.80	30.70	30.60	30.50						
NE-4	B	29.56	29.41	29.25	29.09	28.93	28.77	28.61	28.45	28.29	28.11	29.22	27.62	19.72	19.47	19.43	19.18
	A	29.60	29.46	29.31	29.15	29.00	28.85	28.70	28.55	28.39	28.23						
NE-5	B	27.36	27.10	26.84	26.56	26.30	26.03	25.76	25.48	25.20	24.94	27.04	24.45	17.21	16.79	16.70	16.28
	A	27.44	27.19	26.92	26.66	26.39	26.13	25.86	25.60	25.23	25.07						

		GIRDER SLOPE G-1	G-2	G-3	G-4	G-5	G-6	G-7	G-8	G-9	G-10
NE-3	B	0	0	0	0	0	0	0	0	0	0
	A	0	0	0	0	0	0	0	0	0	0
NE-4	B	0	0	0	0	0	0	0	0	0	-1/16
	A	0	0	0	0	0	0	0	0	0	0
NE-5	B	1/4	1/4	1/4	1/4	1/4	1/4	1/4	1/4	1/4	1/4
	A	1/16	1/16	1/16	1/16	1/16	1/16	1/16	1/16	1/16	1/8

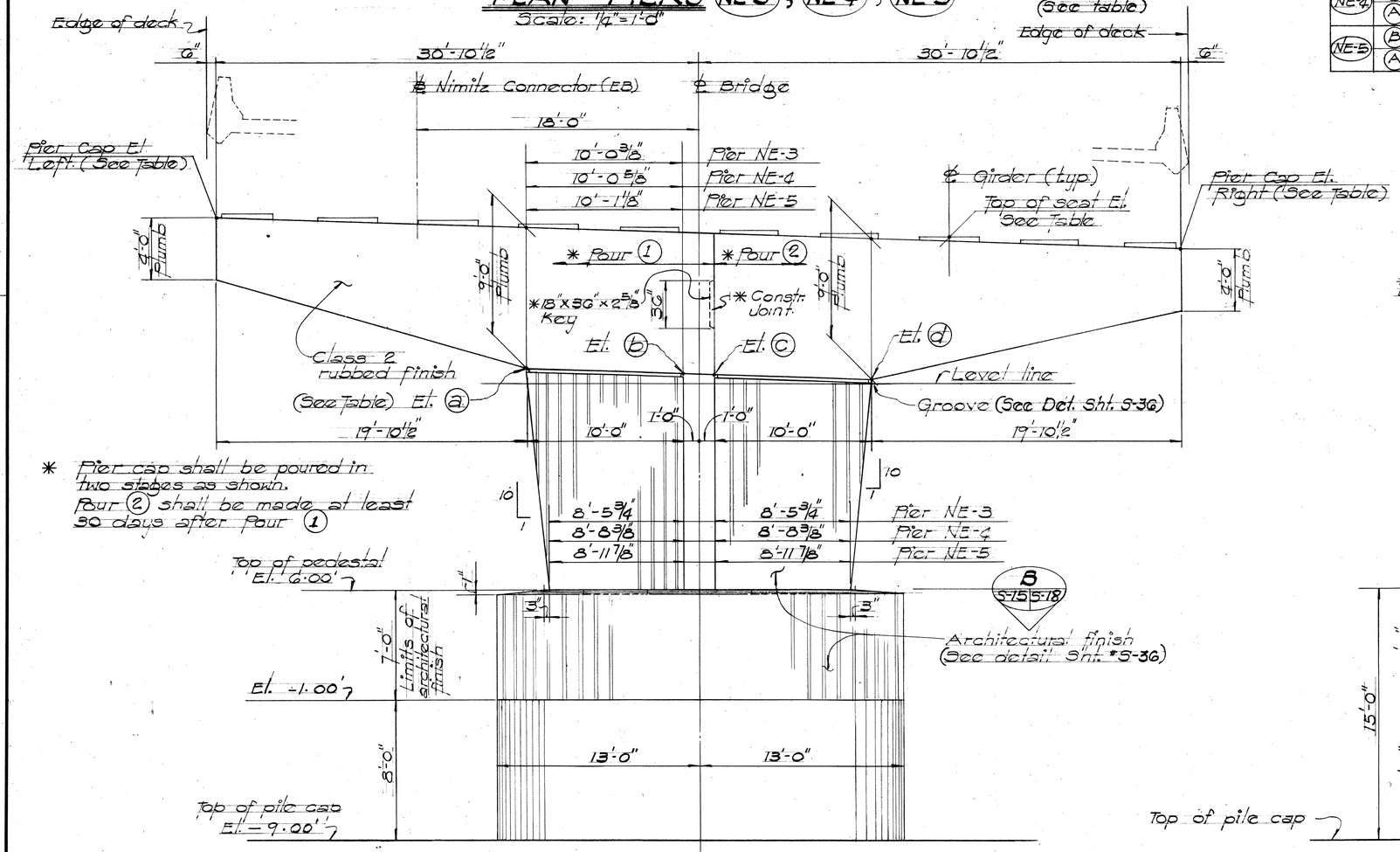

* Pier cap shall be poured in two stages as shown. Pour (2) shall be made at least 30 days after Pour (1)

ELEVATION PIERS (NE-3), (NE-4), (NE-5)

TOWARDS INCREASING STATION

Scale: 1/4"=1'-0"

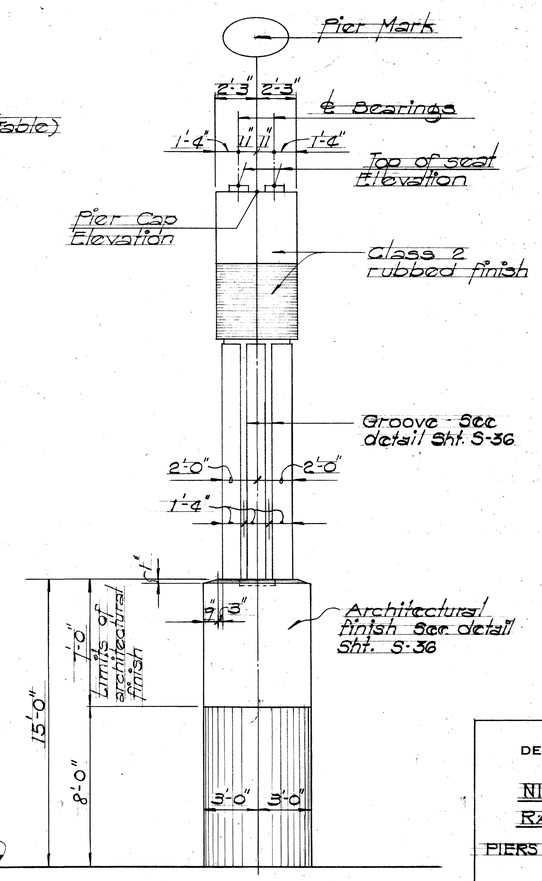

END ELEVATION

Scale: 1/4"=1'-0"

GEORGE K. NISHIMURA REGISTERED PROFESSIONAL ENGINEER No. 1368 HAWAII, U.S.A.

HAROLD TAKASHI MIYAMOTO REGISTERED PROFESSIONAL ENGINEER No. 1514 HAWAII, U.S.A.

THIS WORK WAS PREPARED BY ME OR UNDER MY SUPERVISION

THIS WORK WAS PREPARED BY ME OR UNDER MY SUPERVISION

STATE OF HAWAII
DEPARTMENT OF TRANSPORTATION
HIGHWAYS DIVISION

NIMITZ CONNECTOR (EB)
RAMP "A" AND RAMP "B"

PIERS NE-3 THRU NE-5 PLAN & ELEV.

KEEHI INTERCHANGE
FAI PROJ NO. I-H-1(168)17

SCALE: AS SHOWN DATE: JULY, 1981

SHEET No. S-15 OF 49 SHEETS

ORIGINAL PLAN		DATE
	SURVEY PLOTTED BY	
	DRAWN BY	
	TRACED BY	
NOTE BOOK	DESIGNED BY	
	QUANTITIES BY	
No.	CHECKED BY	

FED. ROAD DIST. NO.	STATE	FED. AID PROJ. NO.	FISCAL YEAR	SHEET NO.	TOTAL SHEETS
HAWAII	HAW.	I-HI-1(168)17	1982	98	145

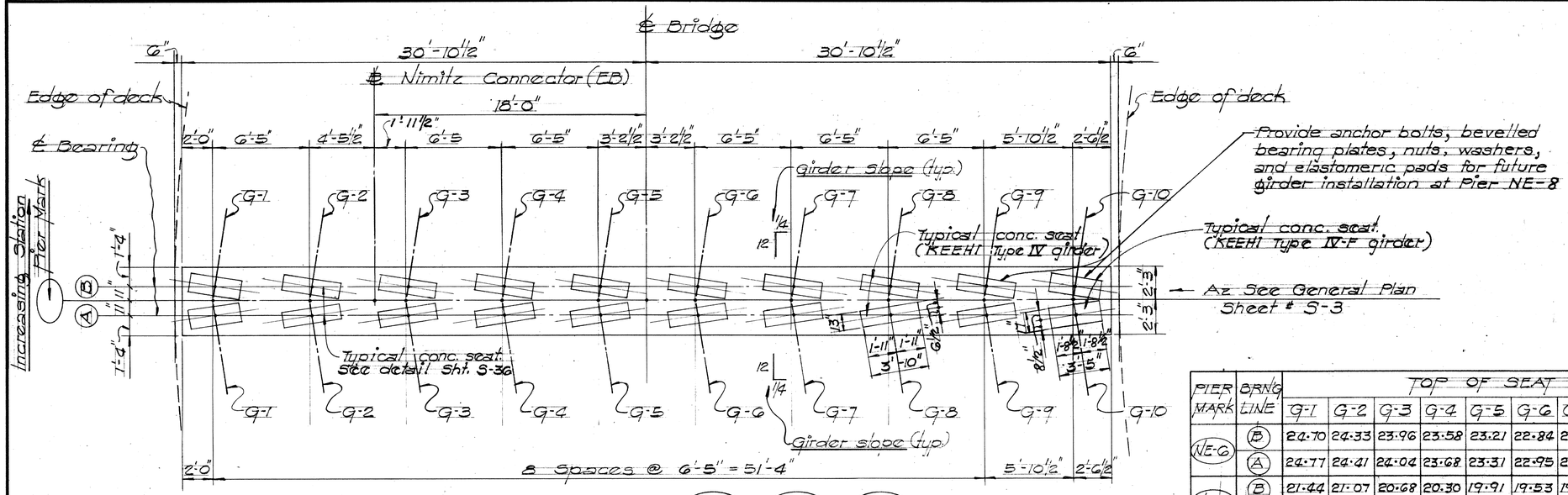

PLAN ~ PIERS (NE-6), (NE-7), (NE-8)

Scale 1/4" = 1'-0"

PIER MARK	BRNG LINE	TOP OF SEAT ELEVATIONS G-1	G-2	G-3	G-4	G-5	G-6	G-7	G-8	G-9	G-10	PIER CAP ELEVATIONS LEFT	RIGHT	TOP OF COL. ELEV. ⓐ	ⓑ	ⓒ	ⓓ
NE-6	B	24.70	24.33	23.96	23.58	23.21	22.84	22.46	22.09	21.71	21.36	24.37	20.78	14.21	13.63	13.52	12.94
	A	24.77	24.41	24.04	23.68	23.31	22.95	22.58	22.20	21.83	21.48						
NE-7	B	21.44	21.07	20.68	20.30	19.91	19.53	19.14	18.76	18.37	18.01	21.12	17.42	10.93	10.33	10.21	9.61
	A	21.55	21.16	20.77	20.38	19.99	19.60	19.20	18.81	18.41	18.04						
NE-8	B	18.26	17.88	17.50	17.04	16.64	16.25	15.87	15.48	15.10	14.70	17.86	14.10	7.65	7.04	6.92	6.31
	A	18.19	17.81	17.43	17.05	16.66	16.28	15.89	15.51	15.12	14.76						

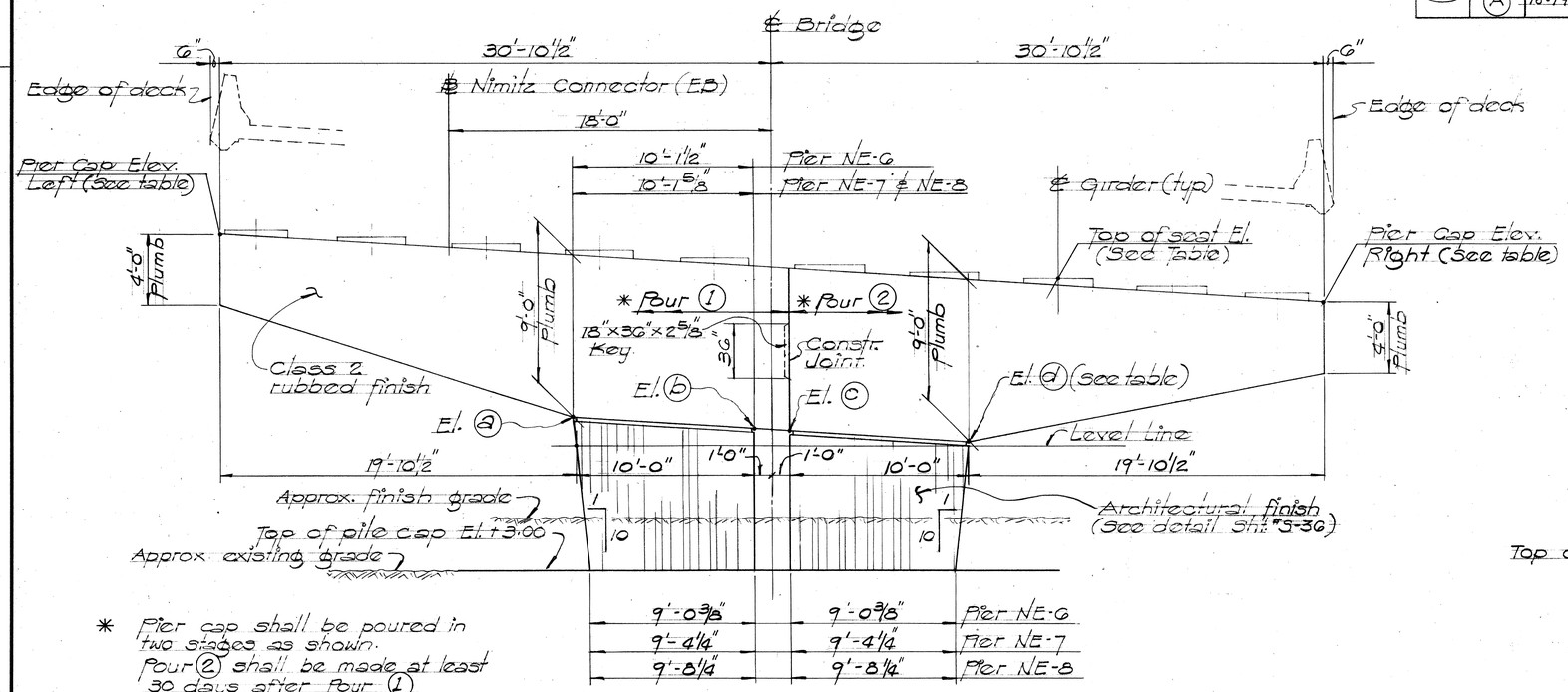

* Pier cap shall be poured in two stages as shown. Pour ② shall be made at least 30 days after Pour ①

ELEVATION ~ PIERS (NE-6), (NE-7), (NE-8)

TOWARDS INCREASING STATION

Scale: 1/4" = 1'-0"

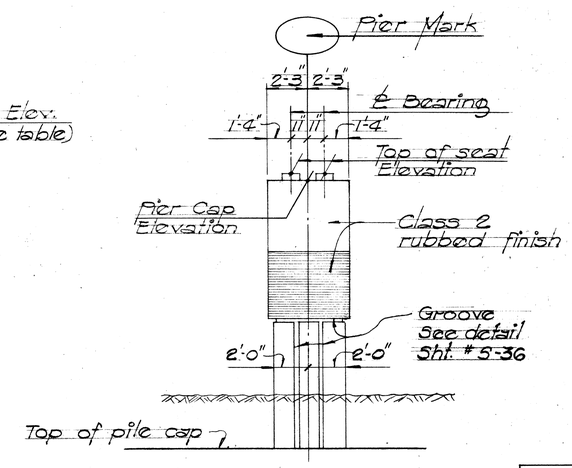

END ELEVATION

Scale: 1/4" = 1'-0"

GEORGE K. NISHIMURA REGISTERED PROFESSIONAL ENGINEER No. 1388 HAWAII, U.S.A.

THIS WORK WAS PREPARED BY ME OR UNDER MY SUPERVISION

HAROLD TAKASHI MIYAMOTO REGISTERED PROFESSIONAL ENGINEER No. 1514 HAWAII, U.S.A.

THIS WORK WAS PREPARED BY ME OR UNDER MY SUPERVISION

STATE OF HAWAII
DEPARTMENT OF TRANSPORTATION
HIGHWAYS DIVISION

NIMITZ CONNECTOR (EB)
RAMP "A" AND RAMP "B"

PIERS NE-6 THRU NE-8 PLAN & ELEVATION

KEEHI INTERCHANGE
FAI. PROJ. NO. I-HI-1(168)17

SCALE: AS SHOWN DATE: JULY, 1981

SHEET NO. S-18 OF 49 SHEETS

ORIGINAL PLAN | SURVEY PLOTTED BY | DRAWN BY | TRACED BY | DESIGNED BY | QUANTITIES BY | CHECKED BY | DATE | NOTE BOOK | No.

FED. ROAD DIST. NO.	STATE	FED. AID PROJ. NO.	FISCAL YEAR	SHEET NO.	TOTAL SHEETS
HAWAII	HAW.	I-H1-1(168)17	1982	99	145

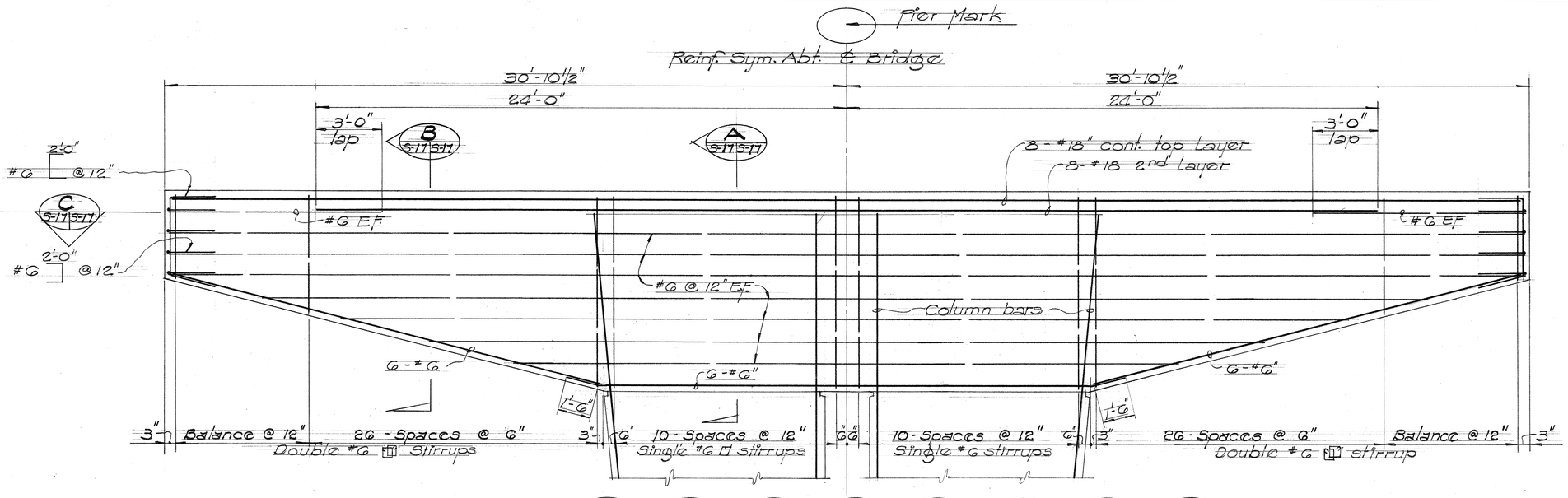

PIER CAPS

Scale 3/8" = 1'-0"

NE-1, NE-2, NE-3, NE-4, NE-5, NE-6, NE-7, NE-8

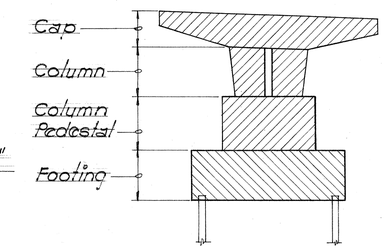

f'c = 4000 psi
f'c = 3000 psi

DIAGRAM CONC. STRENGTH (AT 28 DAYS) D S-19 S-17

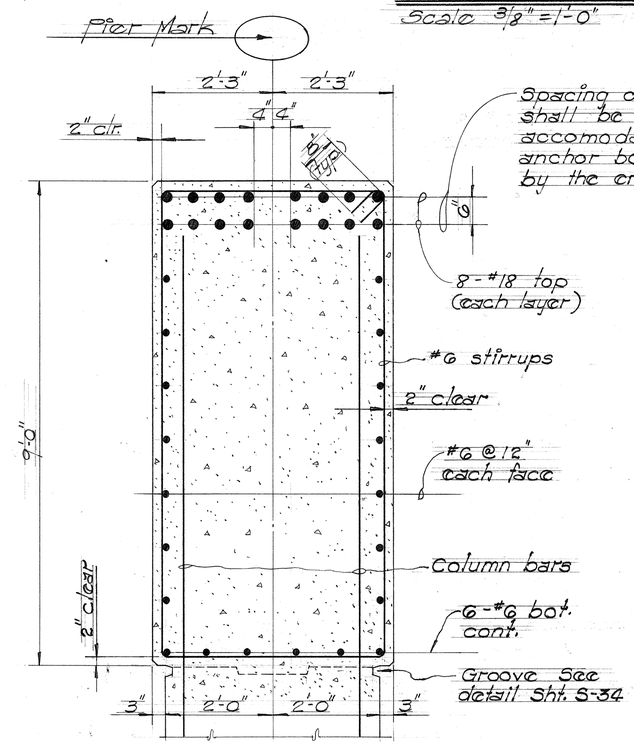

SECTION A S-17 S-17
Scale: 3/4" = 1'-0"

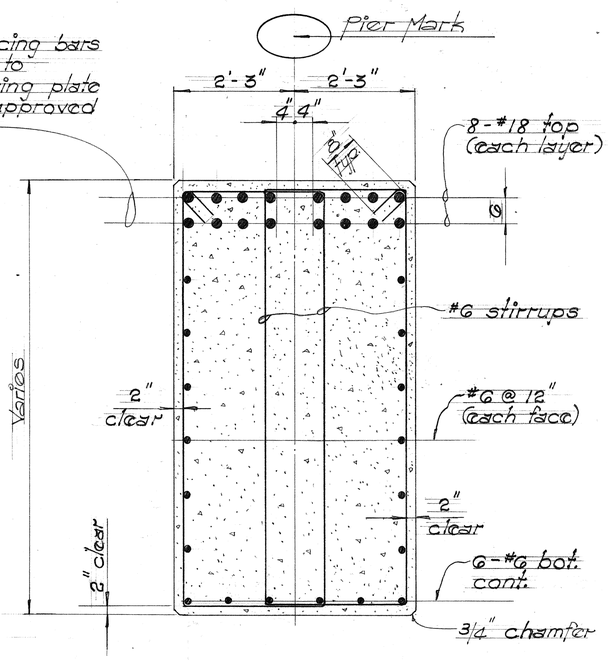

SECTION B S-17 S-17
Scale: 3/4" = 1'-0"

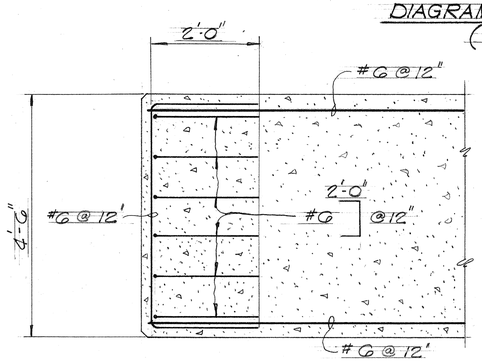

SECTION C S-17 S-17
Scale: 3/4" = 1'-0"

PIER CAP NOTES:

1. All reinforcing steel except stirrups shall be grade 60.
2. Concrete strength @ 28 days. f'c = 4,000 psi. See concrete strength diagram this sheet.

GEORGE K. NISHIMURA REGISTERED PROFESSIONAL ENGINEER No. 1388 HAWAII, U.S.A.

THIS WORK WAS PREPARED BY ME OR UNDER MY SUPERVISION

HAROLD TAKASHI MIYAMOTO REGISTERED PROFESSIONAL ENGINEER No. 1314 HAWAII, U.S.A.

THIS WORK WAS PREPARED BY ME OR UNDER MY SUPERVISION

STATE OF HAWAII
DEPARTMENT OF TRANSPORTATION
HIGHWAYS DIVISION

NIMITZ CONNECTOR (EB)
RAMP "A" AND RAMP "B"
PIER CAP REINFORCING DETAILS
KEEHI INTERCHANGE
FAI PROJ. NO. I-H1-1(168)17

SCALE: AS SHOWN DATE: July, 1981

SHEET No. S-17 OF 49 SHEETS

ORIGINAL PLAN		DATE
	SURVEY PLOTTED BY	
	DRAWN BY	
	TRACED BY	
NOTE BOOK	DESIGNED BY	
	QUANTITIES BY	
No.	CHECKED BY	

FED. ROAD DIST. NO.	STATE	FED. AID PROJ. NO.	FISCAL YEAR	SHEET NO.	TOTAL SHEETS
HAWAII	HAW.	I-H1-1(168)17	1982	100	145

Column Reinf. Sym. Abt. ℄ Bridge

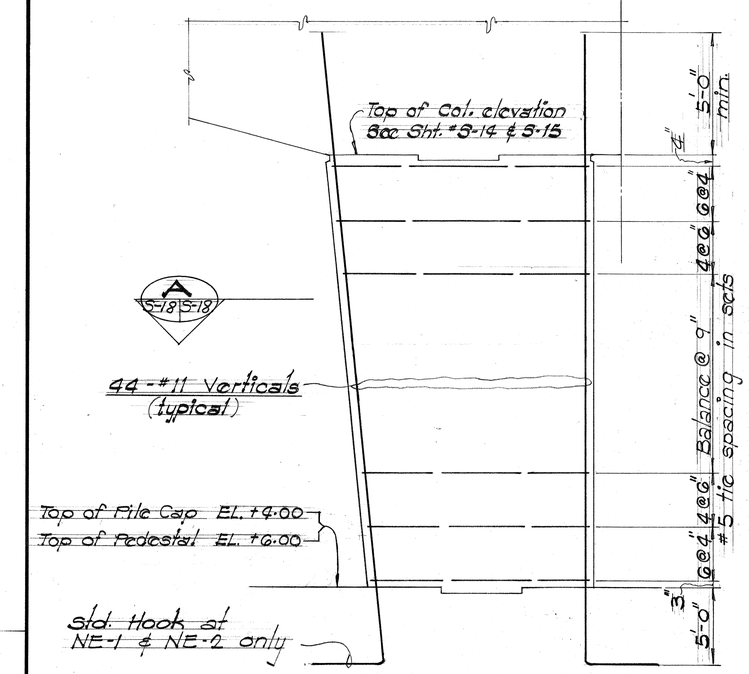

COLUMN REINFORCING

PIERS (NE-1), (NE-2), (NE-3), (NE-4), (NE-5)

N.T.S.

Column Reinf. Sym. Abt. ℄ Bridge

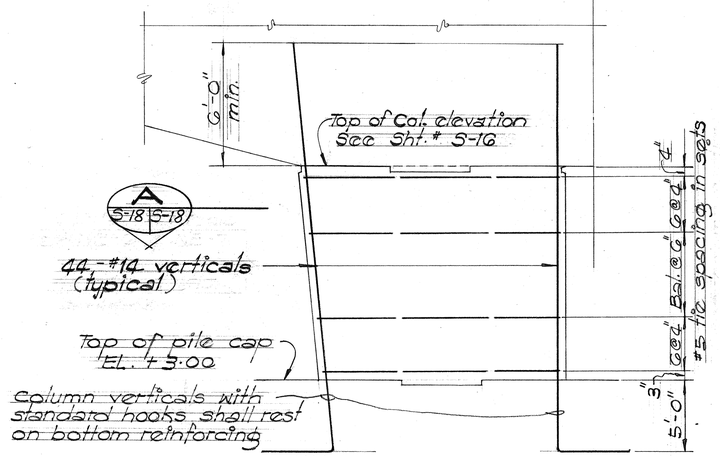

COLUMN REINFORCING

PIERS (NE-6), (NE-7), (NE-8)

N.T.S.

Col. Sym. Abt. ℄ Bridge

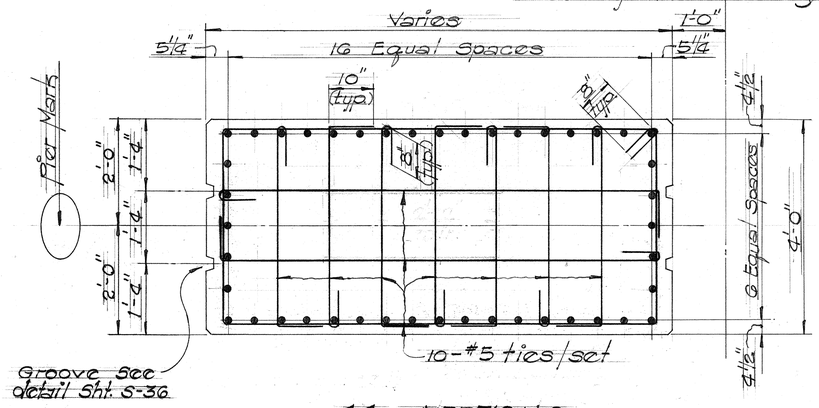

44 - VERTICALS

SECTION (A S-18)

Scale: 3/4" = 1'-0"

S-18, S-19

Pedestal Sym. Abt. ℄ Bridge

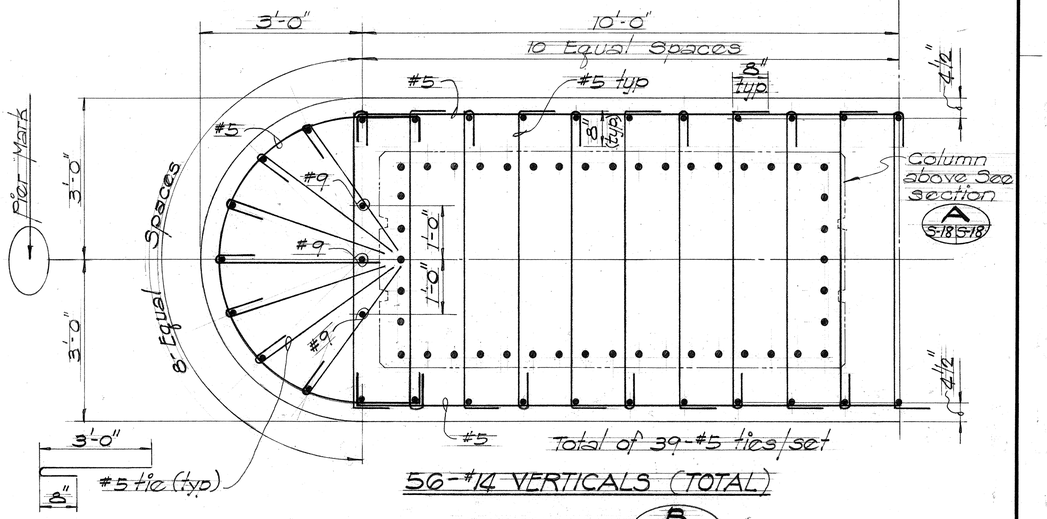

56-#14 VERTICALS (TOTAL)

SECTION (B S-18)

Scale: 3/4" = 1'-0"

S-18, S-18, S-19

COLUMN AND PEDESTAL NOTES:

1. All reinforcing steel except ties shall be grade 60.
2. Concrete strength @ 28 days, f'c = 4,000 psi. See conc. strength diagram (D S-18 S-17)

Reinf Sym Abt. ℄ Bridge

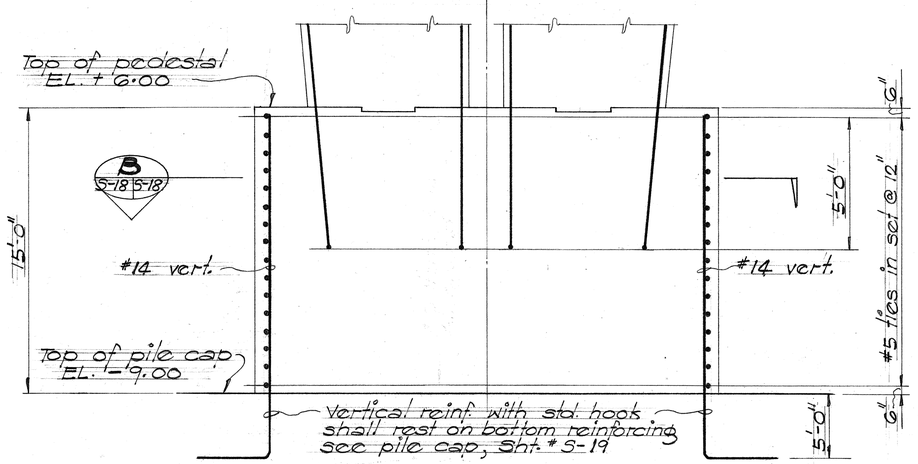

PEDESTAL REINFORCING

PIERS (NE-3), (NE-4), (NE-5)

Scale: 1/4" = 1'-0"

ORIGINAL PLAN | SURVEY PLOTTED BY | DRAWN BY | TRACED BY | DESIGNED BY | QUANTITIES BY | CHECKED BY | DATE
NOTE BOOK | No.

GEORGE K. NISHIMURA — REGISTERED PROFESSIONAL ENGINEER No. 1388 — HAWAII, U.S.A.

THIS WORK WAS PREPARED BY ME OR UNDER MY SUPERVISION

HAROLD TAKASHI MIYAMOTO — REGISTERED PROFESSIONAL ENGINEER No. 1514 — HAWAII, U.S.A.

THIS WORK WAS PREPARED BY ME OR UNDER MY SUPERVISION

STATE OF HAWAII
DEPARTMENT OF TRANSPORTATION
HIGHWAYS DIVISION

NIMITZ CONNECTOR (EB)
RAMP "A" AND RAMP "B"
PIERS NE-1 THRU NE-8 COLUMN AND PEDESTAL REINFORCING DETAILS
KEEHI INTERCHANGE
FAI PROJ. NO. I-H1-1(168)17

SCALE: AS SHOWN DATE: JULY, 1981

SHEET No. S-18 OF 49 SHEETS

FED. ROAD DIST. NO.	STATE	FED. AID PROJ. NO.	FISCAL YEAR	SHEET NO.	TOTAL SHEETS
HAWAII	HAW.	I-HI-1(168)17	1982	101	145

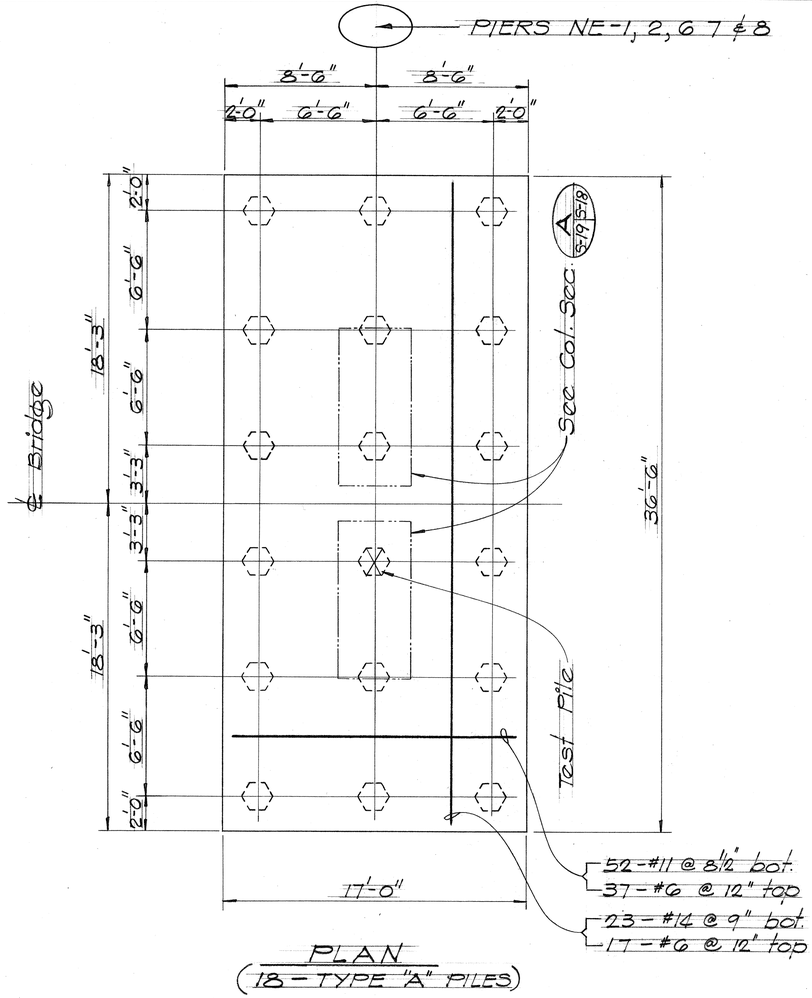

PLAN
(18 - TYPE "A" PILES)

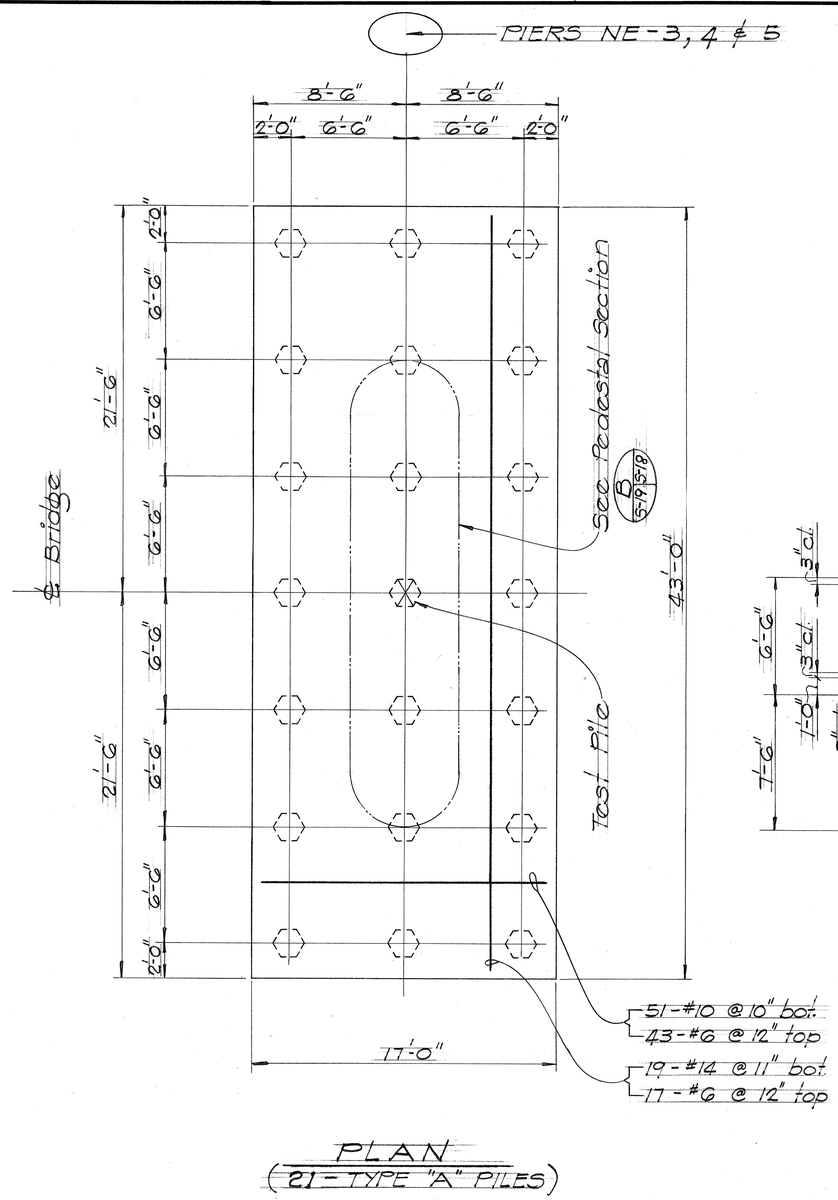

PLAN
(21 - TYPE "A" PILES)

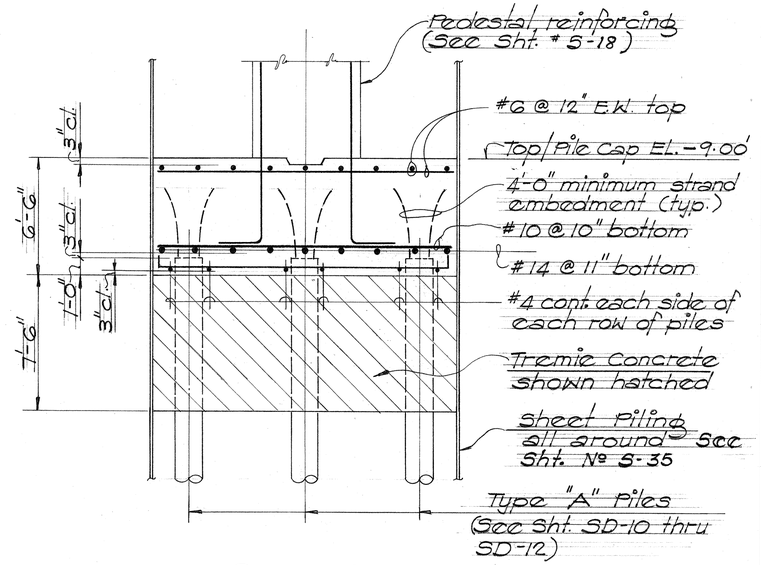

SECTION

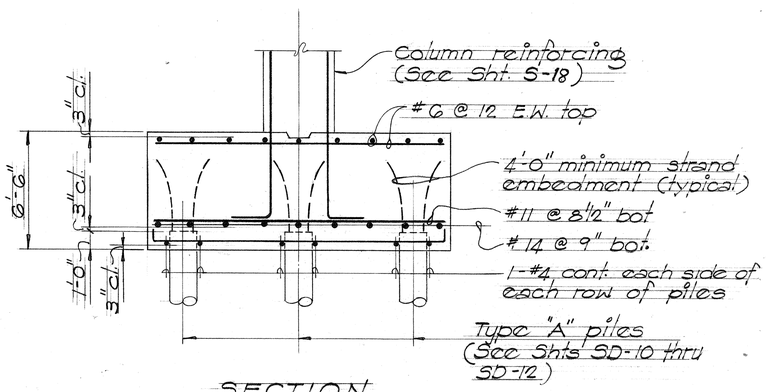

SECTION

PILE CAPS NE-1 NE-2 NE-6 NE-7 NE-8
Scale: 1/4" = 1'-0"

PILE CAPS NE-3 NE-4 NE-5
Scale: 1/4" = 1'-0"

PILE CAP NOTES:

1. Reinforcing steel shall be grade 60.
2. Concrete strength @ 28 days, f'c = 3,000 psi. See conc. strength diagram D 5-19 5-17

GEORGE K. NISHIMURA REGISTERED PROFESSIONAL ENGINEER No. 1388 HAWAII, U.S.A.

THIS WORK WAS PREPARED BY ME OR UNDER MY SUPERVISION

HAROLD TAKASHI MIYAMOTO REGISTERED PROFESSIONAL ENGINEER No. 1514 HAWAII, U.S.A.

THIS WORK WAS PREPARED BY ME OR UNDER MY SUPERVISION

STATE OF HAWAII
DEPARTMENT OF TRANSPORTATION
HIGHWAYS DIVISION

NIMITZ CONNECTOR (EB)
RAMP "A" AND RAMP "B"

NE-1 THRU NE-8 PILE CAP DETAILS

KEEHI INTERCHANGE
FAI. PROJ. NO. I-HI-1 (168) 17

SCALE: AS SHOWN DATE: July, 1981

SHEET No. 5-19 OF 49 SHEETS

ORIGINAL PLAN | NOTE BOOK No. | SURVEY PLOTTED BY | DRAWN BY | TRACED BY | DESIGNED BY | QUANTITIES BY | CHECKED BY | DATE

FED. ROAD DIST. NO.	STATE	FED. AID PROJ. NO.	FISCAL YEAR	SHEET NO.	TOTAL SHEETS
HAWAII	HAW.	I-HI-1(168)17	1982	102	145

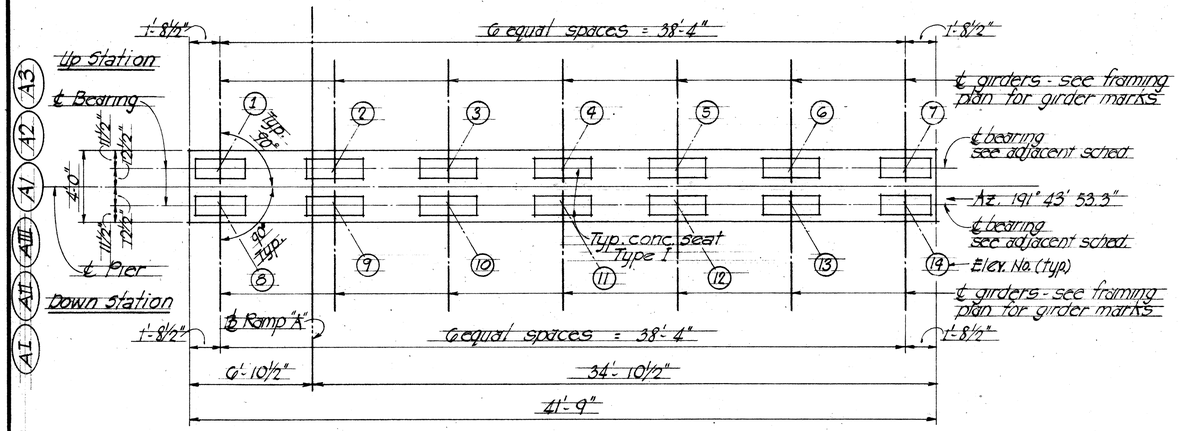

PLAN - PIERS (A1), (A2), (A3), (A-I), (A-II) & (A-III)

Scale: 1/4" = 1'-0"

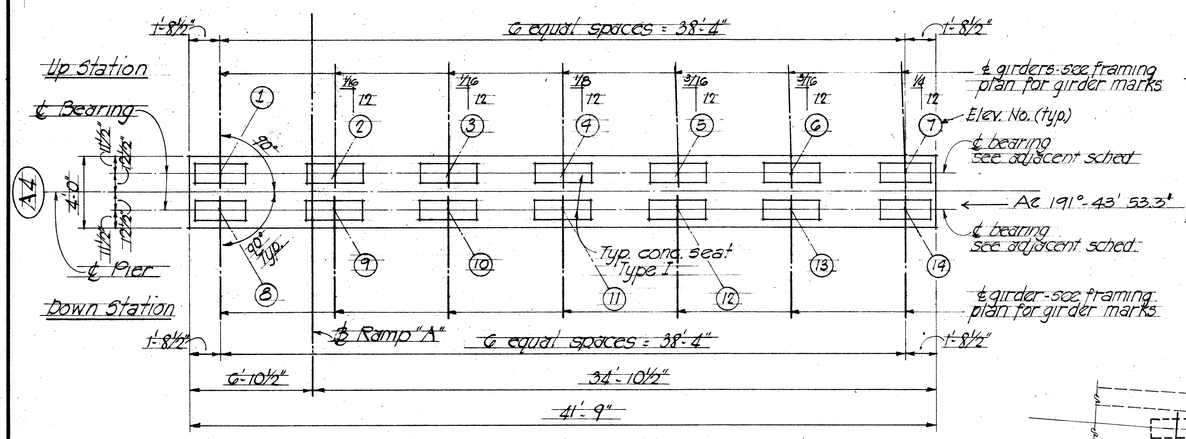

PLAN - PIER (A4)

Scale 1/4" = 1'-0"

CONCRETE SEAT ELEV. SCHEDULE

Pier number	A1	A2	A3	A4	A-I	A-II	A-III
℄ bearing Up station							
Elev. No. 1	8.09	9.54	11.24	13.21	5.37	6.03	6.91
2	8.00	9.45	11.15	13.13	5.28	5.94	6.82
3	7.91	9.36	11.05	13.03	5.19	5.85	6.73
4	7.81	9.26	10.96	12.93	5.10	5.75	6.63
5	7.72	9.16	10.86	12.84	5.00	5.66	6.54
6	7.62	9.07	10.77	12.74	4.91	5.56	6.44
7	7.52	8.96	10.66	12.64	4.81	5.46	6.34
℄ bearing Down station							
Elev. No. 8	8.04	9.48	11.17	13.12	5.35	6.00	6.87
9	7.95	9.39	11.09	13.03	5.26	5.91	6.78
10	7.86	9.30	10.99	12.93	5.17	5.82	6.69
11	7.76	9.20	10.89	12.84	5.07	5.72	6.59
12	7.67	9.11	10.80	12.74	4.98	5.62	6.49
13	7.57	9.01	10.70	12.65	4.89	5.53	6.40
14	7.47	8.90	10.60	12.54	4.79	5.43	6.30

TOP OF PIER CAP ELEV. SCHEDULE

Pier number	A1	A2	A3	A4	A-I	A-II	A-III
Left top elevation	7.70	9.14	10.84	12.78	5.00	5.65	6.52
Right top elevation	7.08	8.52	10.21	12.15	4.39	5.03	5.90

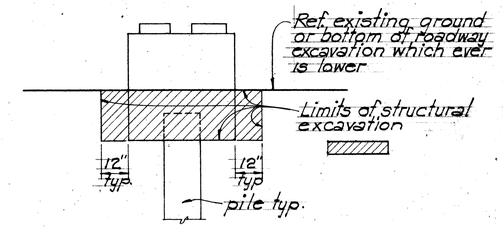

PAY LIMITS AT PIER BELOW GRADE

Not to scale

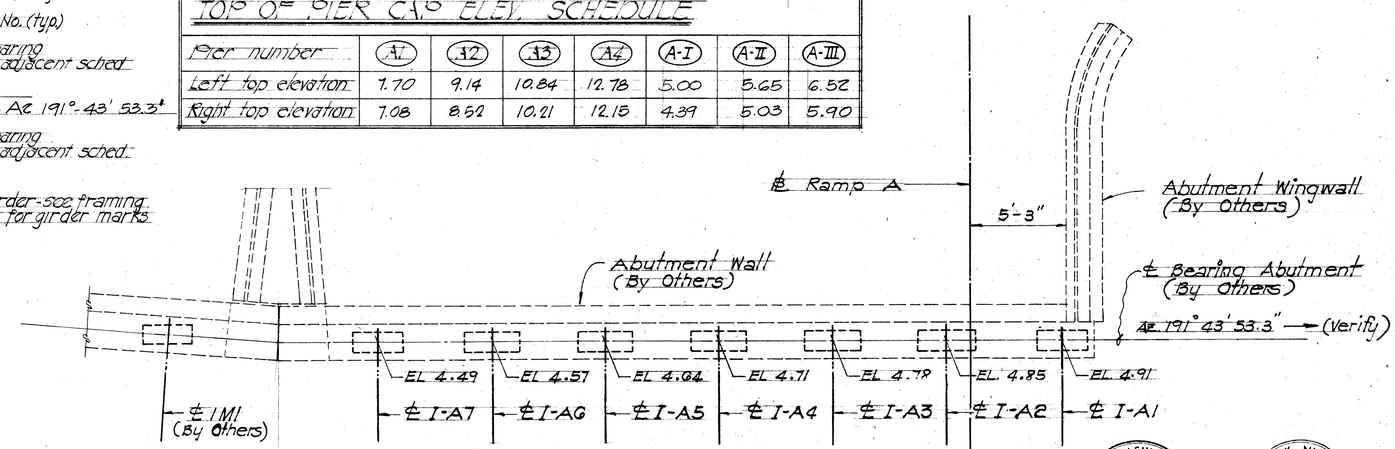

EXISTING WEST ABUTMENT - RAMP "A"

Scale: 1/4" = 1'-0"

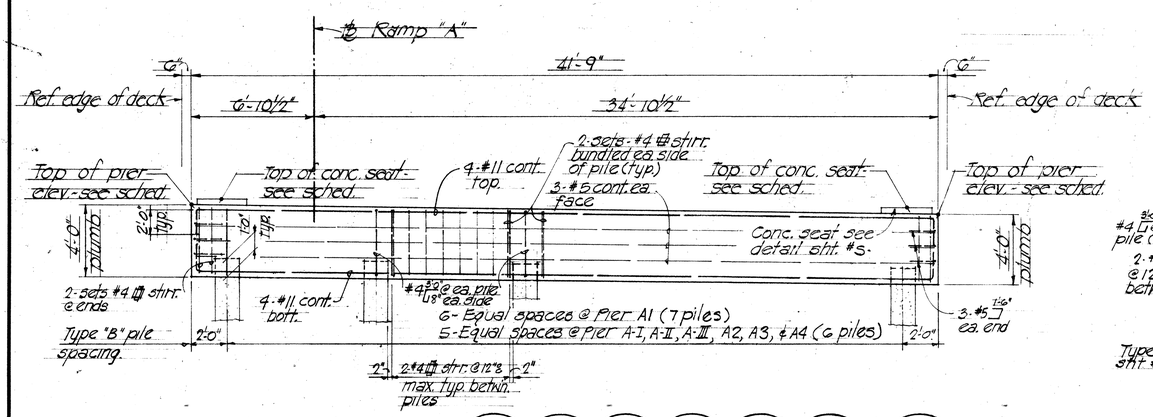

ELEVATION @ PIERS (A1) (A2) (A3) (A4) (A-I) (A-II) & (A-III)

Scale 1/4" = 1'-0"

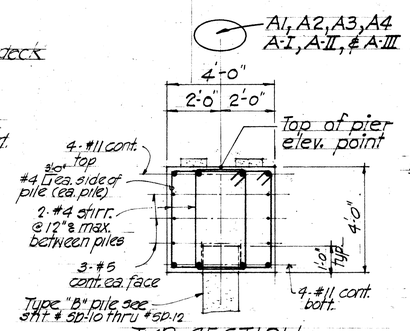

TYP. SECTION

Scale 3/8" = 1'-0"

NOTE:
Adjust pier cap top main reinforcing spacing to clear bearing plate anchor bolts.

HAROLD TAKASHI MIYAMOTO REGISTERED PROFESSIONAL ENGINEER No. 3514 HAWAII, U.S.A.

THIS WORK WAS PREPARED BY ME OR UNDER MY SUPERVISION

GEORGE K. NISHIMURA REGISTERED PROFESSIONAL ENGINEER No. 1388 HAWAII, U.S.A.

THIS WORK WAS PREPARED BY ME OR UNDER MY SUPERVISION

STATE OF HAWAII
DEPARTMENT OF TRANSPORTATION
HIGHWAYS DIVISION

NIMITZ CONNECTOR (E.B.), RAMP "A" & RAMP "B"

KEEHI INTERCHANGE

F.A.I. PROJ. NO. I-HI-1 (168)17

Scale: As shown Date: JULY, 1981

SHEET NO. S-200 OF 49 SHEETS

ORIGINAL PLAN | SURVEY PLOTTED BY | DRAWN BY | TRACED BY | DESIGNED BY | QUANTITIES BY | CHECKED BY | DATE | NOTE BOOK | NO.

FED. ROAD DIST. NO.	STATE	FED. AID PROJ. NO.	FISCAL YEAR	SHEET NO.	TOTAL SHEETS
HAWAII	HAW.	I-HI-I(168)17	1982	103	145

NOTE:
All #18 & #14 bars shall be grade 60.

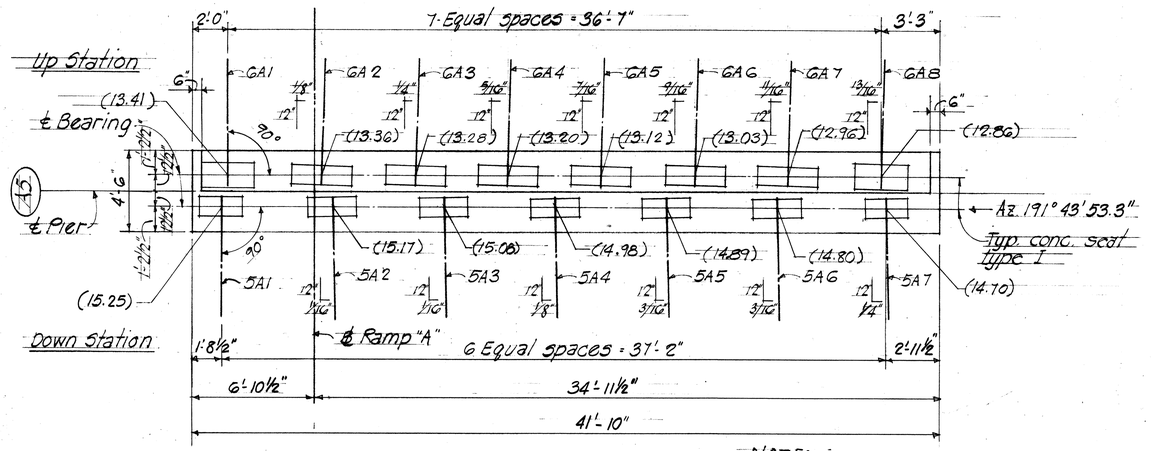

PLAN ~ PIER (A5)
Scale 1/4" = 1'-0"

NOTE:
(00.00) Denotes top of concrete seat elevation.

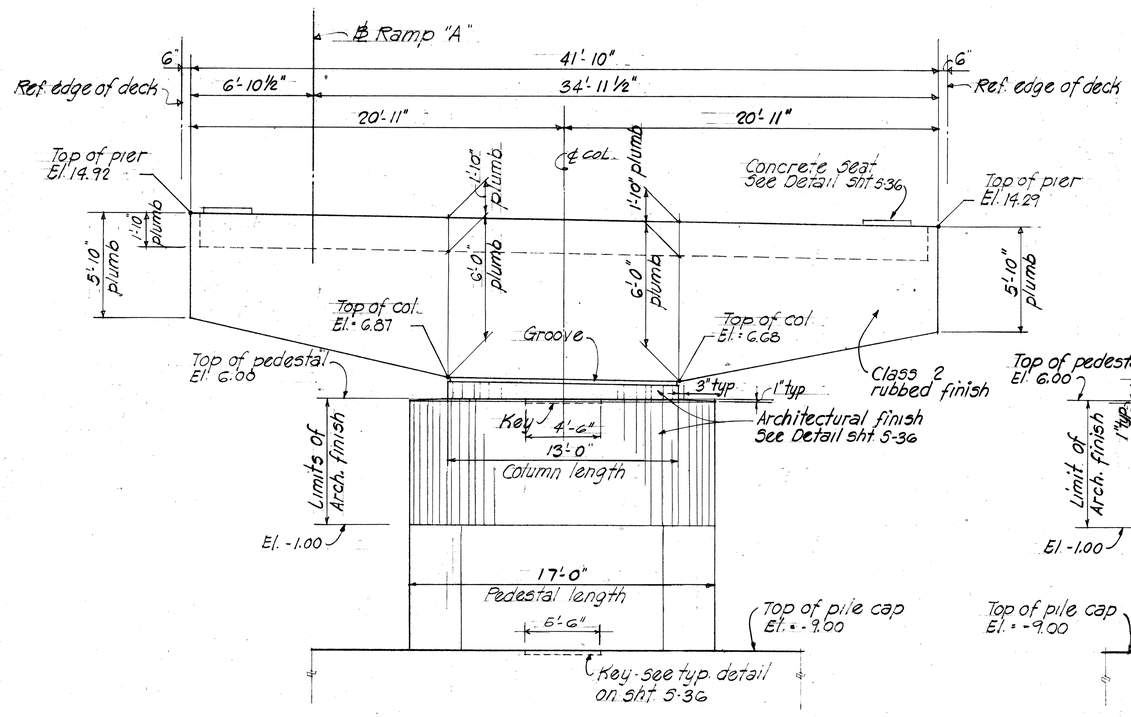

ELEVATION ~ PIER (A5)
Scale 1/4" = 1'-0"

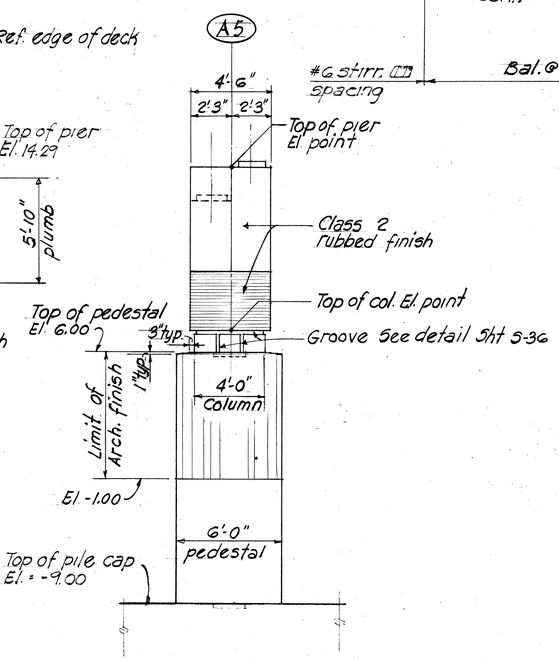

END ELEVATION
Scale 1/4" = 1'-0"

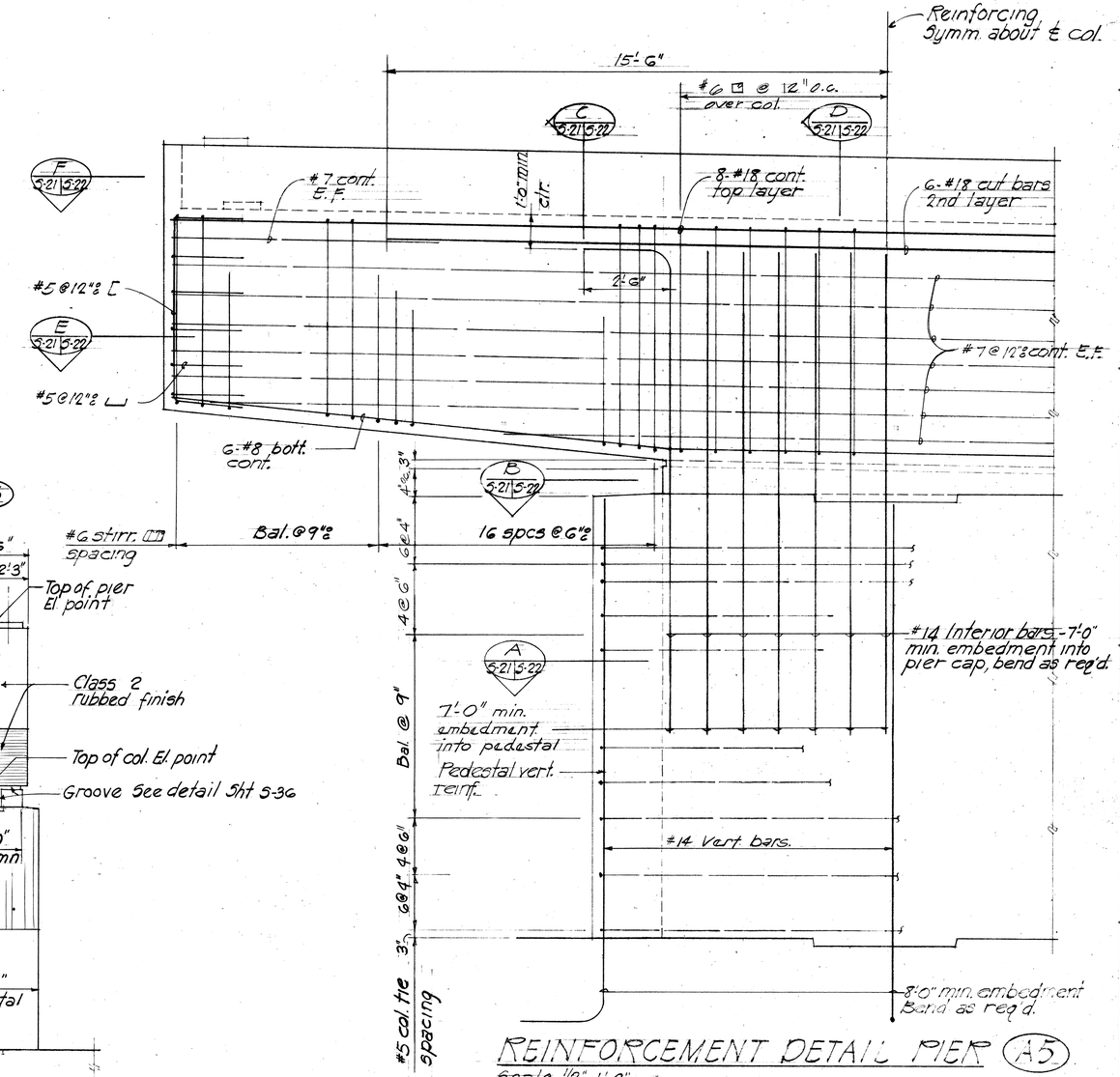

REINFORCEMENT DETAIL PIER (A5)
Scale 1/2" = 1'-0"

ORIGINAL PLAN	SURVEY PLOTTED BY	DATE
	DRAWN BY	
	TRACED BY	
NOTE BOOK	DESIGNED BY	
	QUANTITIES BY	
No.	CHECKED BY	

HAROLD TAKASHI MIYAMOTO REGISTERED PROFESSIONAL ENGINEER No. 1514 HAWAII, U.S.A.

GEORGE K. NISHIMURA REGISTERED PROFESSIONAL ENGINEER No. 1386

THIS WORK WAS PREPARED BY ME OR UNDER MY SUPERVISION

THIS WORK WAS PREPARED BY ME OR UNDER MY SUPERVISION

STATE OF HAWAII
DEPARTMENT OF TRANSPORTATION
HIGHWAYS DIVISION

NIMITZ CONNECTOR (E.B.), RAMP "A" & RAMP "B"

PIER A5 DETAIL

KEEHI INTERCHANGE

F.A.I. PROJ. NO. I-HI-I(168)17

Scale: As shown. Date: JULY, 1981

SHEET No. 5-21 OF 49 SHEETS

FED. ROAD DIST. NO.	STATE	FED. AID PROJ. NO.	FISCAL YEAR	SHEET NO.	TOTAL SHEETS
HAWAII	HAW.	HI-1(168)17	1982	104	145

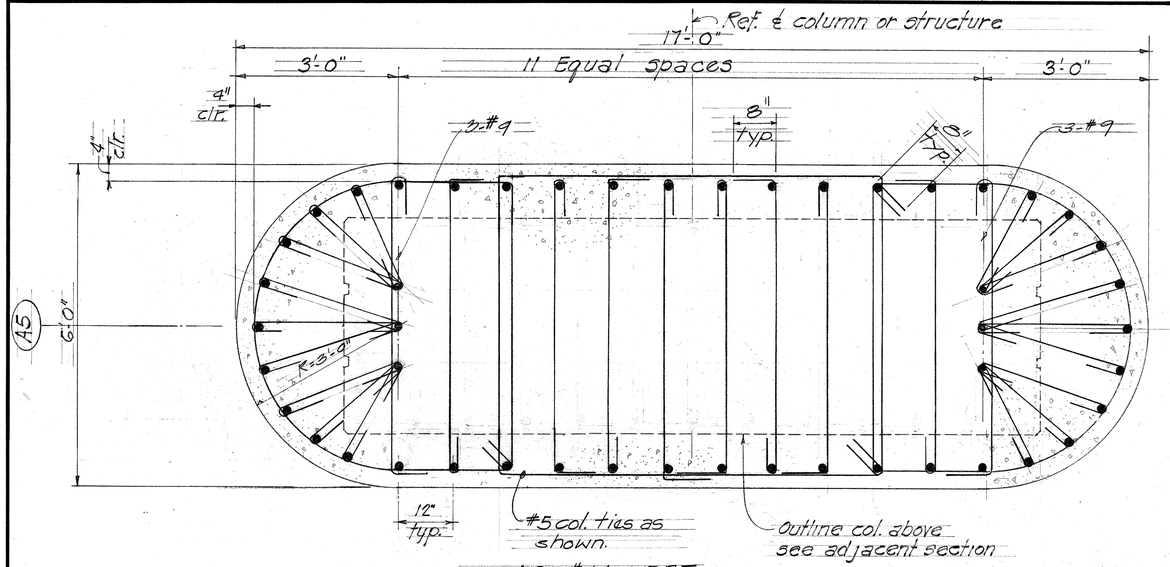

SECTION A 5-21 | 5-22
Scale: 3/4" = 1'-0"

NOTE:
All #18 & #14 bars shall be grade 60

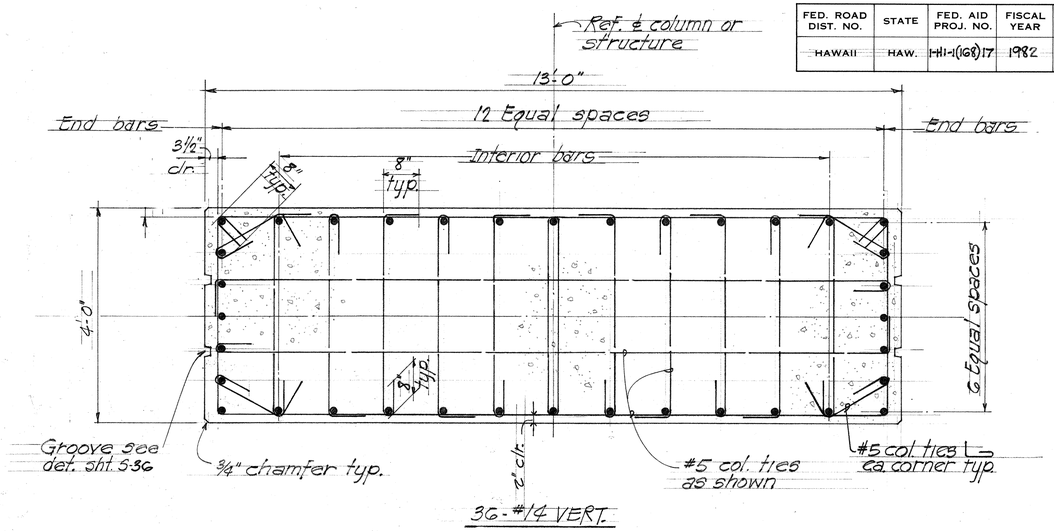

SECTION B 5-21 | 5-22
Scale 3/4" = 1'-0"

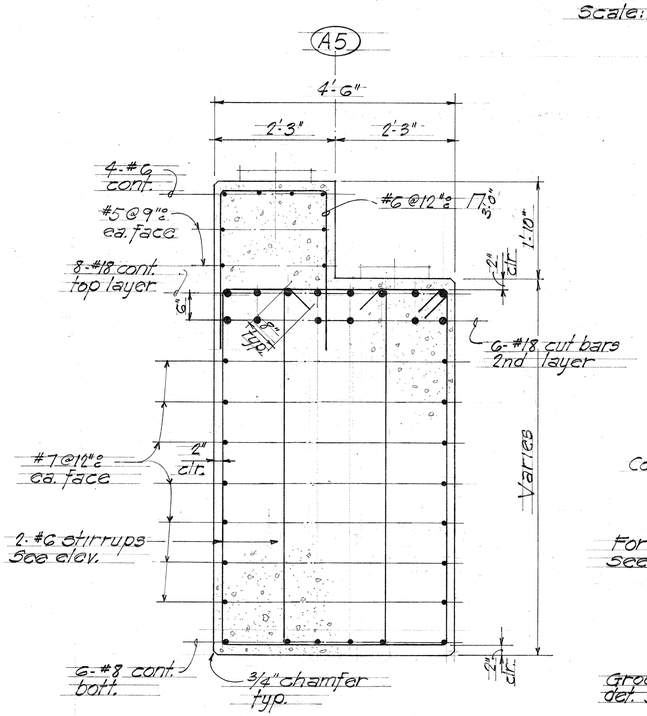

SECTION C 5-21 | 5-22
Scale 3/4" = 1'-0"

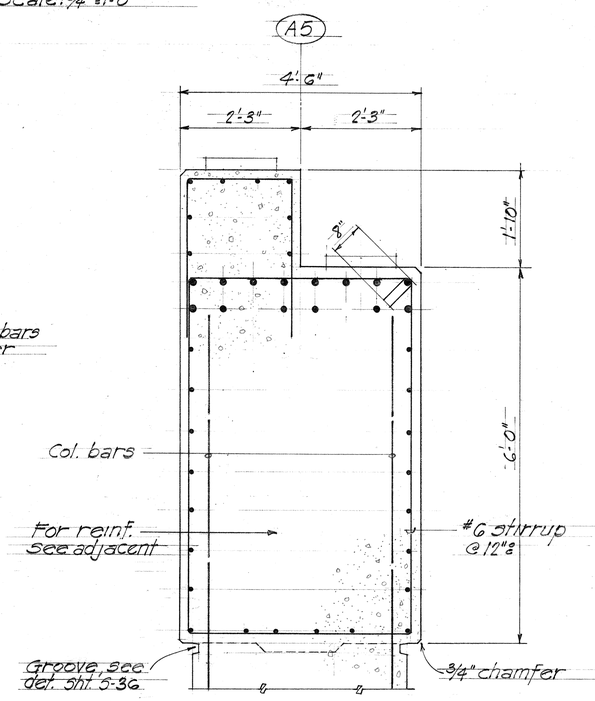

SECTION D 5-21 | 5-22
Scale 3/4" = 1'-0"

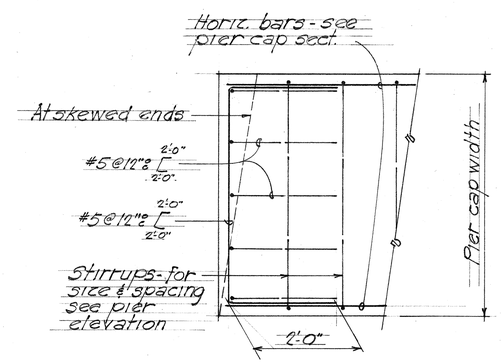

SECTION E 5-22
Scale 3/4" = 1'-0"
5-21
5-23
5-25
5-28
5-30
5-31

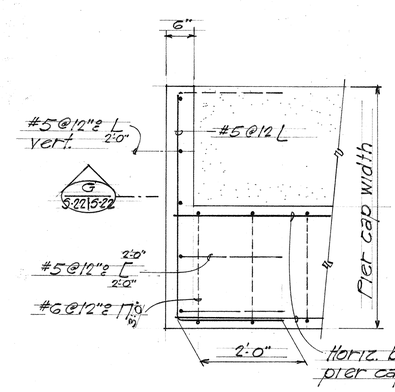

SECTION F 5-22
Scale 3/4" = 1'-0"
5-21
5-31

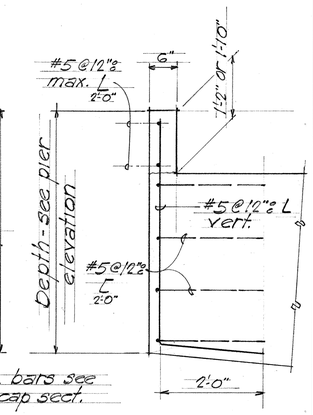

SECTION G 5-22 | 5-22
Scale 3/4" = 1'-0"

NOTE:
Adjust pier cap top main reinforcing spacing to clear bearing plate anchor bolts.

HAROLD TAKASHI MIYAMOTO — REGISTERED PROFESSIONAL ENGINEER No. 1514 — HAWAII, U.S.A.

GEORGE K. NISHIMURA — REGISTERED PROFESSIONAL ENGINEER No. 1388 — HAWAII, U.S.A.

THIS WORK WAS PREPARED BY ME OR UNDER MY SUPERVISION

THIS WORK WAS PREPARED BY ME OR UNDER MY SUPERVISION

STATE OF HAWAII
DEPARTMENT OF TRANSPORTATION
HIGHWAYS DIVISION

NIMITZ CONNECTOR (E.B.)
RAMP "A" & RAMP "B"
PIER A5 DETAIL

KEEHI INTERCHANGE

F.A.I. PROJ. NO. I-HI-1 (168) 17

Scale: As shown — Date: July, 1981

SHEET No. S-22 OF 49 SHEETS

ORIGINAL PLAN	SURVEY PLOTTED BY	DATE
	DRAWN BY	
	TRACED BY	
NOTE BOOK	DESIGNED BY	
	QUANTITIES BY	
No.	CHECKED BY	

PRINTED ON NO. 1000H CLEARPRINT

FED. ROAD DIST. NO.	STATE	FED. AID PROJ. NO.	FISCAL YEAR	SHEET NO.	TOTAL SHEETS
HAWAII	HAW.	I-H1-1(168)17	1982	105	145

NOTE:

1. All #18 & #14 bars shall be grade 60.
2. For Overhead Sign Structure E-34 See details on Sheet No. ES-1 thru ES-6

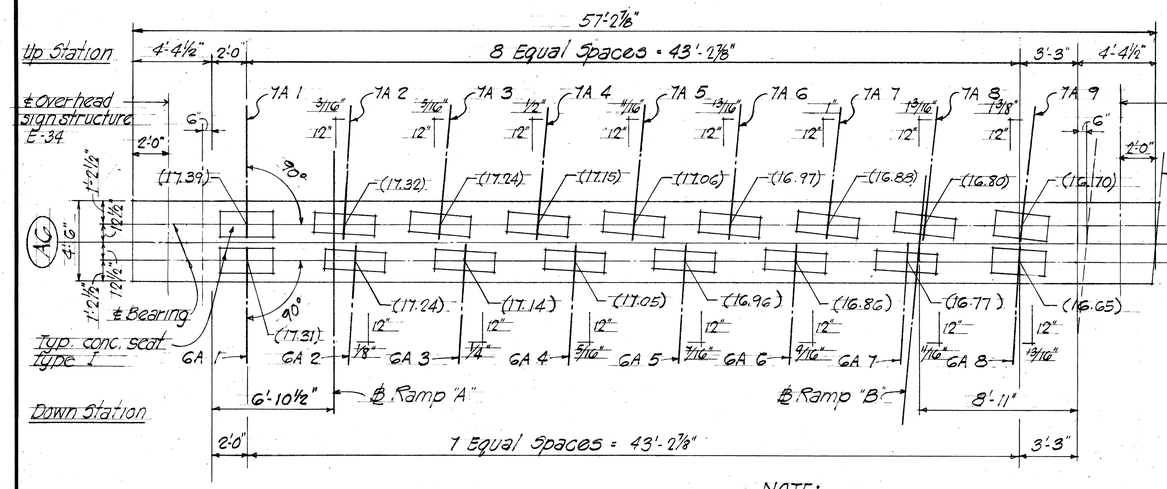

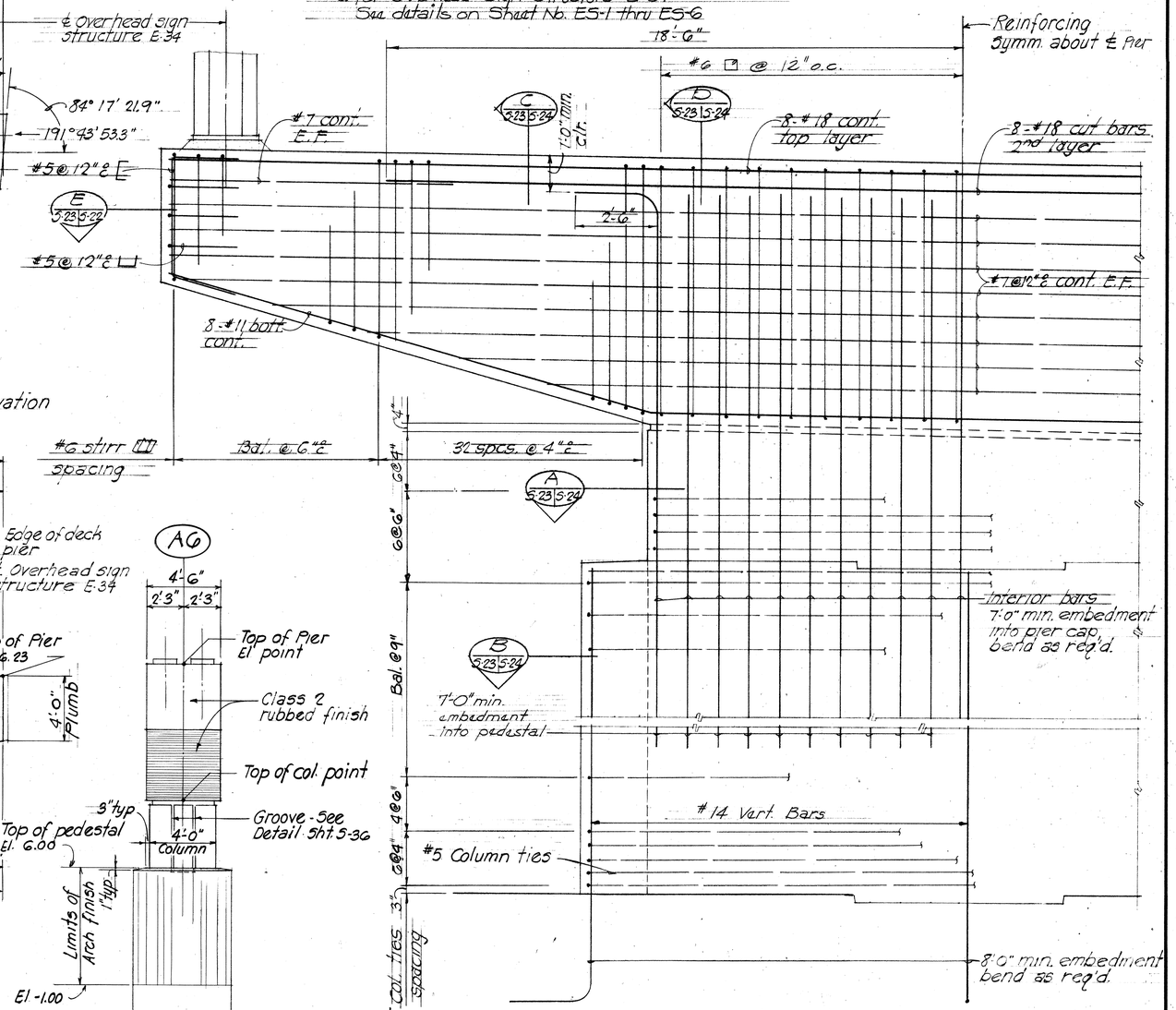

REINFORCEMENT DETAIL PIER (AG)
Scale ½" = 1'-0"

PLAN ~ PIER (AG)

Scale ¼" = 1'-0"

NOTE:
(00.00) Denotes top of concrete seat elevation

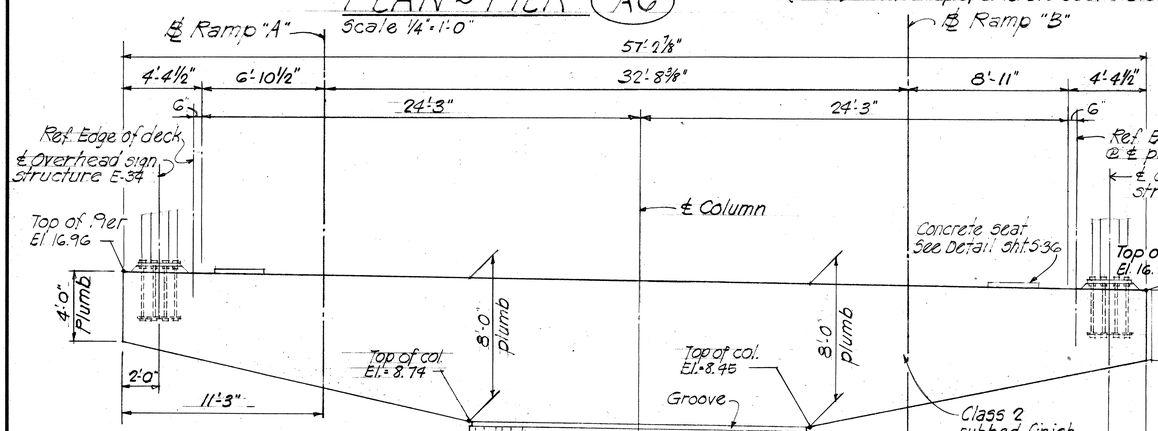

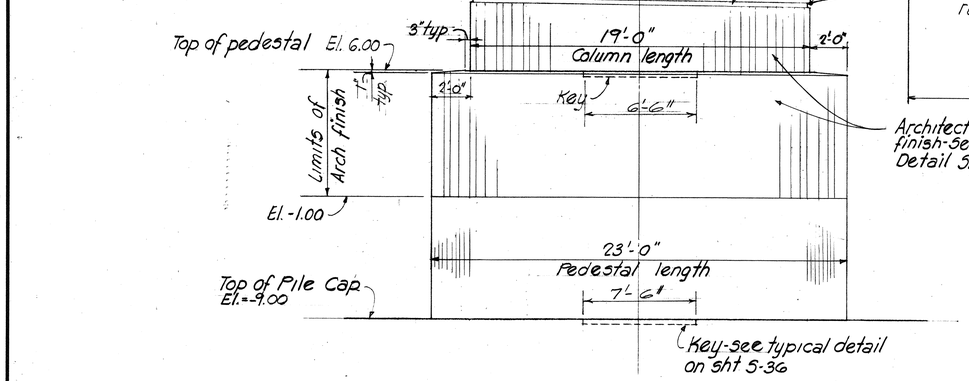

ELEVATION ~ PIER (AG)
Scale ¼" = 1'-0"

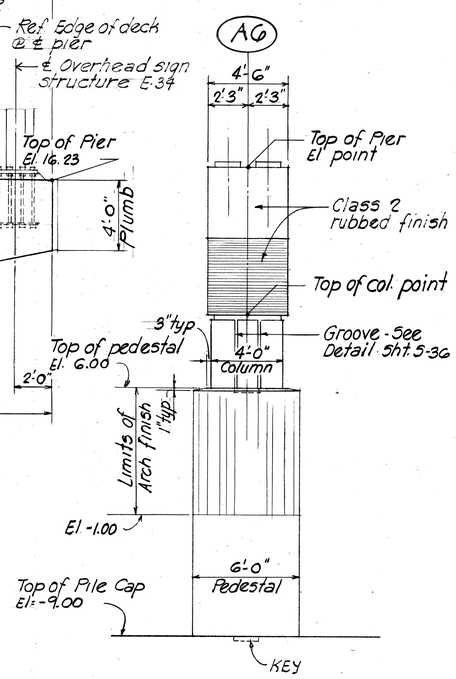

END ELEVATION
Scale ¼" = 1'-0"

STATE OF HAWAII
DEPARTMENT OF TRANSPORTATION
HIGHWAYS DIVISION

NIMITZ CONNECTOR (E.B.),
RAMP "A" & RAMP "B"
PIER AG DETAIL
KEEHI INTERCHANGE
F.A.I. PROJ. NO. I-H1-1(168)17

HAROLD T. TAKASHI MIYAMOTO — REGISTERED PROFESSIONAL ENGINEER No. 1514 — HAWAII, U.S.A.

GEORGE K. NISHIMURA — REGISTERED PROFESSIONAL ENGINEER No. 1308 — HAWAII, U.S.A.

THIS WORK WAS PREPARED BY ME OR UNDER MY SUPERVISION

THIS WORK WAS PREPARED BY ME OR UNDER MY SUPERVISION

Scale: As shown Date: JULY, 1981

SHEET No. 5-23 OF 49 SHEETS

105

ORIGINAL PLAN | SURVEY PLOTTED BY | DRAWN BY | TRACED BY | DESIGNED BY | QUANTITIES BY | CHECKED BY | DATE
NOTE BOOK No.

PRINTED ON NO. 1000H CLEARPRINT

FED. ROAD DIST. NO.	STATE	FED. AID PROJ. NO.	FISCAL YEAR	SHEET NO.	TOTAL SHEETS
HAWAII	HAW.	I-HI-1(168)17	1982	106	145

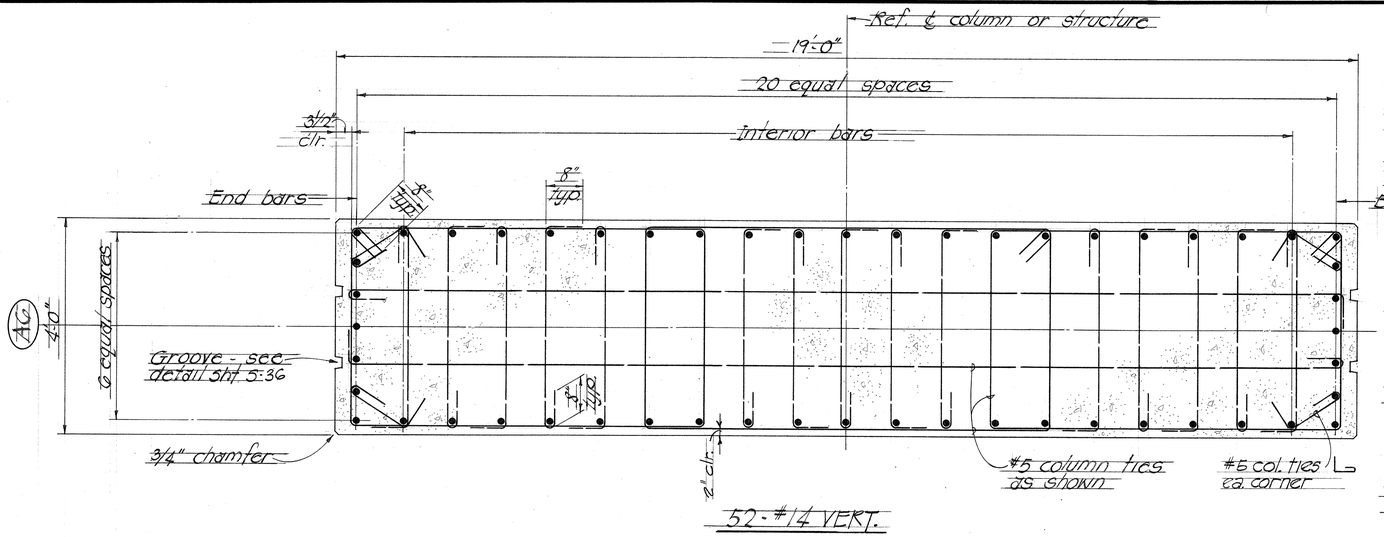

SECTION A (5-23 | 5-24)
Scale: 3/4" = 1'-0"

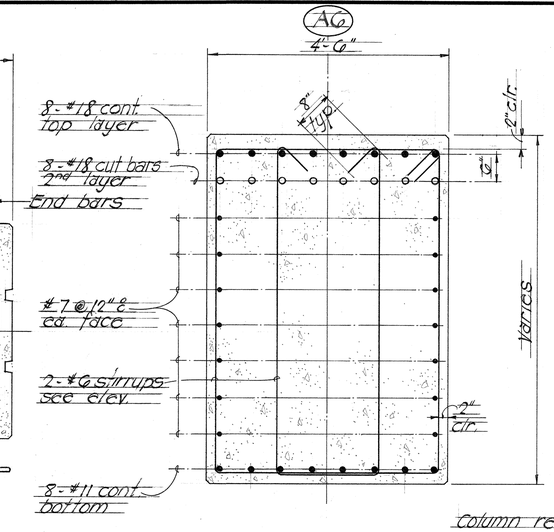

SECTION C (5-23 | 5-24)
Scale: 3/4" = 1'-0"

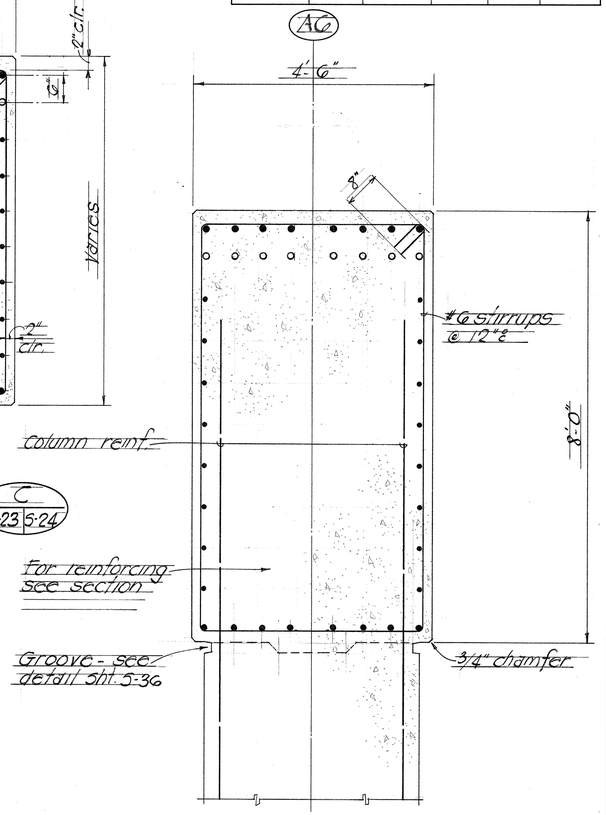

SECTION D (5-23 | 5-24)
Scale: 3/4" = 1'-0"

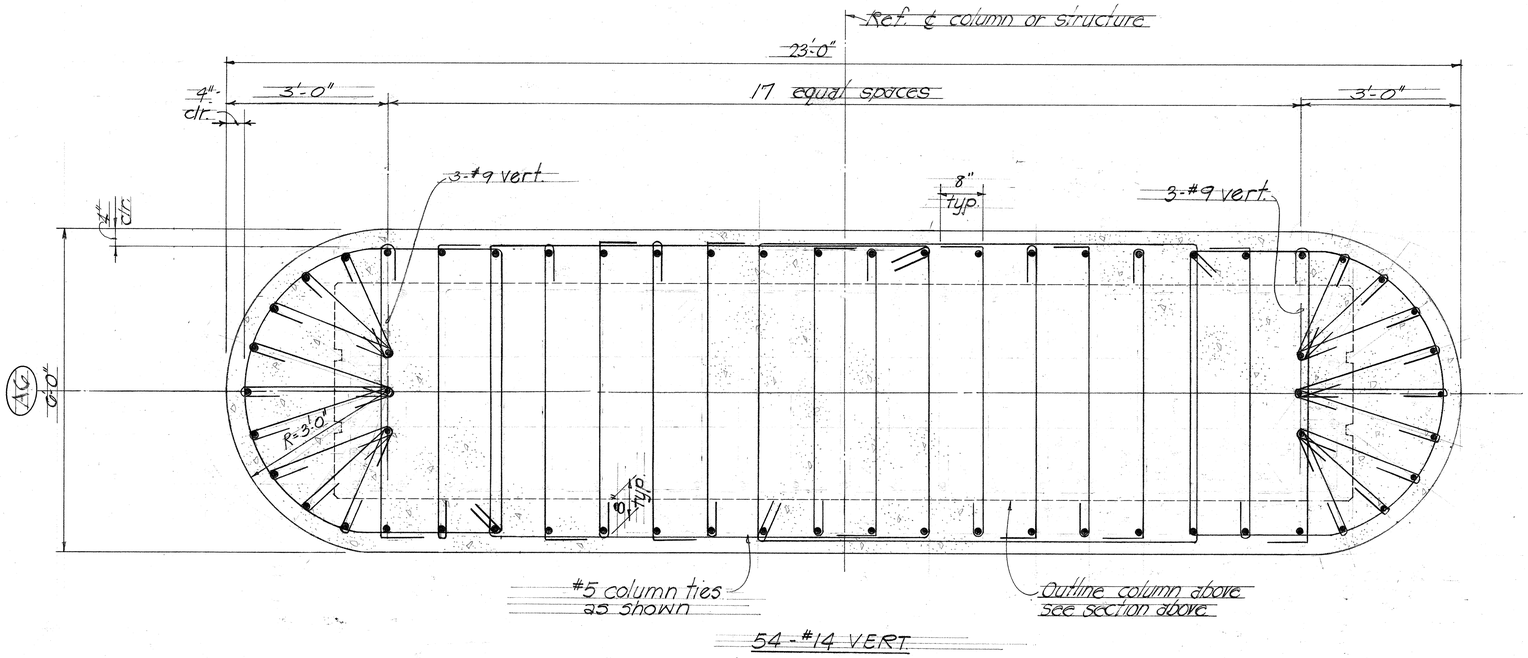

SECTION B (5-23 | 5-24)
Scale: 3/4" = 1'-0"

NOTE:

1. All #18 & #14 bars shall be grade 60.
2. Adjust pier cap top main reinforcing spacing to clear bearing plate anchor bolts.

HAROLD TAKASHI MIYAMOTO — REGISTERED PROFESSIONAL ENGINEER No. 1514 — HAWAII, U.S.A.

THIS WORK WAS PREPARED BY ME OR UNDER MY SUPERVISION

GEORGE K. NISHIMURA — REGISTERED PROFESSIONAL ENGINEER No. 1388 — HAWAII, U.S.A.

THIS WORK WAS PREPARED BY ME OR UNDER MY SUPERVISION

STATE OF HAWAII
DEPARTMENT OF TRANSPORTATION
HIGHWAYS DIVISION

NIMITZ CONNECTOR (E.B.)
RAMP "A" & RAMP "B"
PIER AG DETAIL

KEEHI INTERCHANGE

F.A.I. PROJ. NO. I-HI-1(168)17

Scale: As shown — Date: JULY, 1981

SHEET No. S-24 OF 49 SHEETS

ORIGINAL PLAN	SURVEY PLOTTED BY	DATE
	DRAWN BY	
	TRACED BY	
NOTE BOOK	DESIGNED BY	
	QUANTITIES BY	
No.	CHECKED BY	

PRINTED ON NO. 1000H CLEARPRINT

FED. ROAD DIST. NO.	STATE	FED. AID PROJ. NO.	FISCAL YEAR	SHEET NO.	TOTAL SHEETS
HAWAII	HAW.	I-HI-1(168)17	1982	107	145

NOTE: All #18 & #14 bars shall be Grade 60.

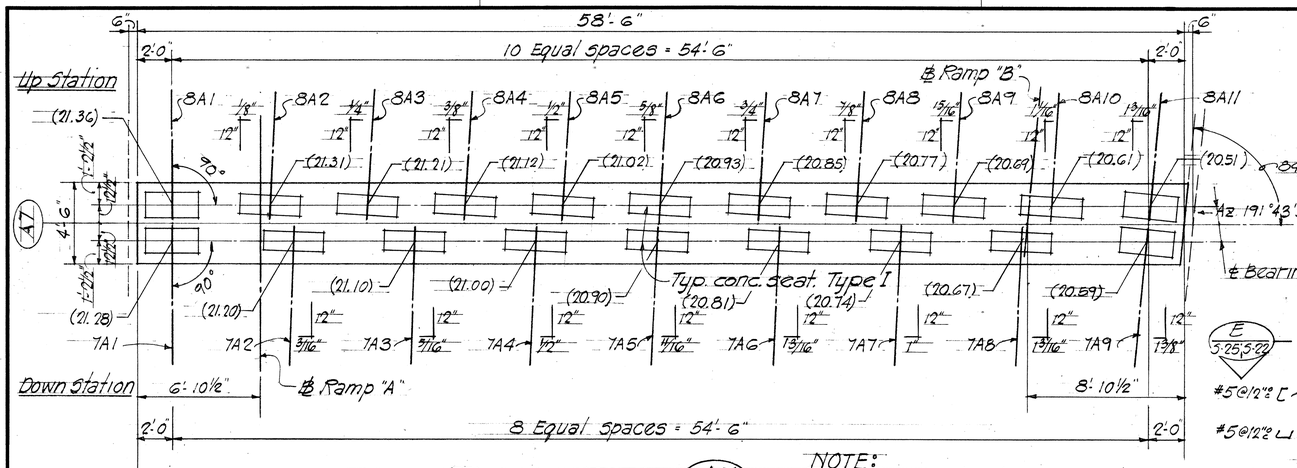

PLAN ~ PIER (A7)

Scale 1/4" = 1'-0"

NOTE: (00.00) Denotes top of concrete seat elevation

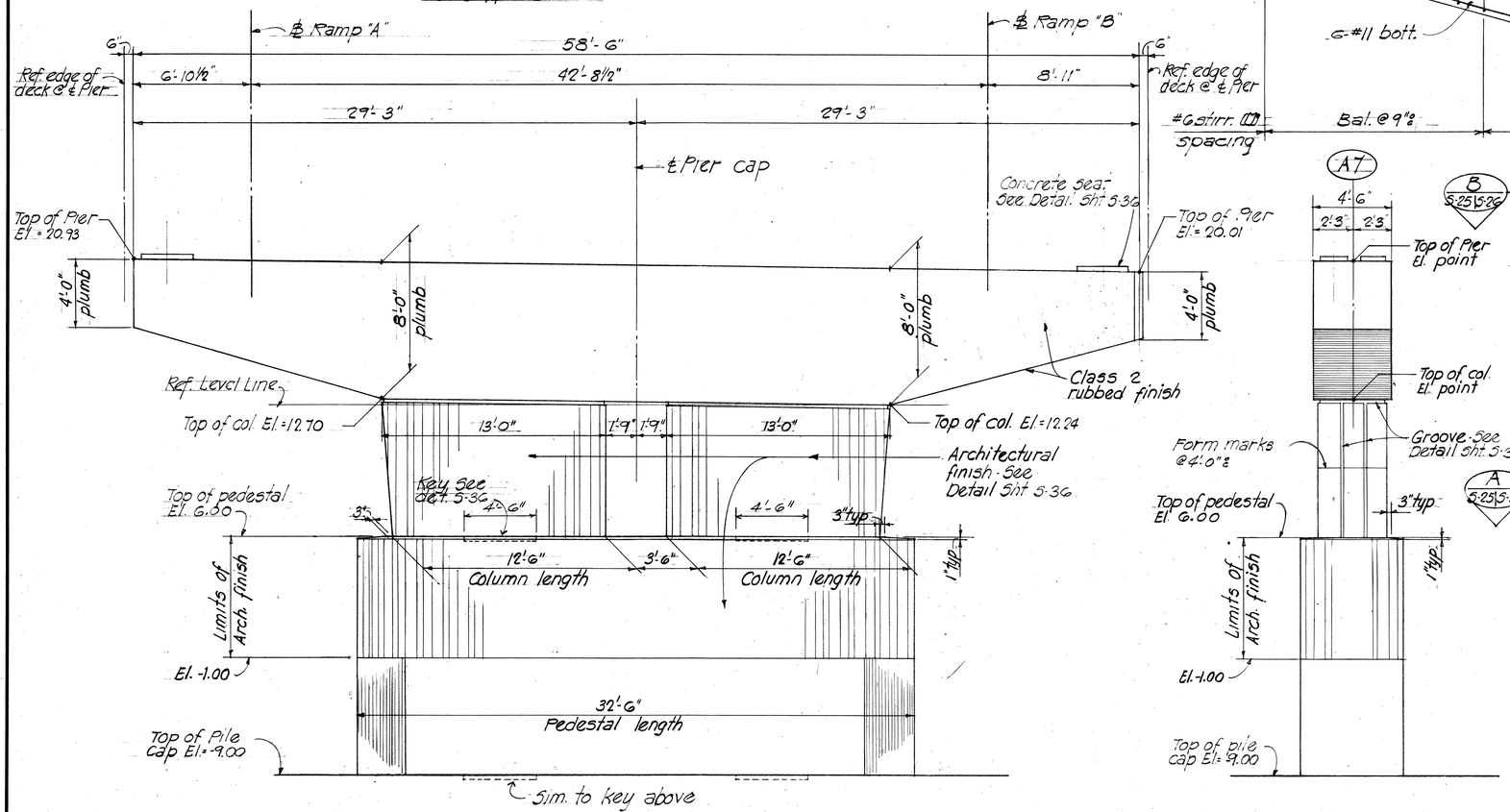

ELEVATION ~ PIER (A7)

Scale 1/4" = 1'-0"

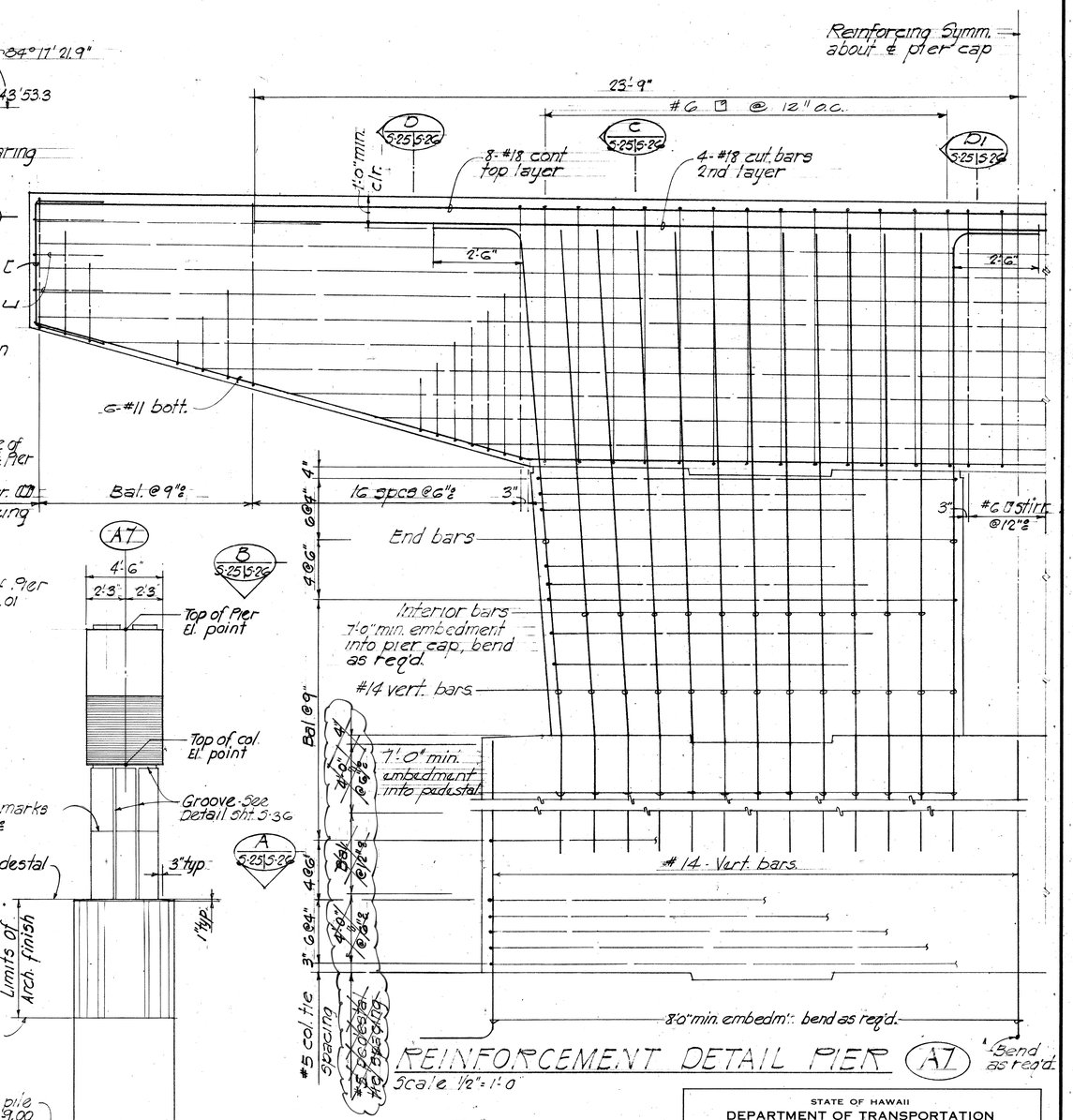

REINFORCEMENT DETAIL PIER (A7)

Scale 1/2" = 1'-0"

HAROLD TAKASHI MIYAMOTO — REGISTERED PROFESSIONAL ENGINEER No. 1514 — HAWAII, U.S.A.

THIS WORK WAS PREPARED BY ME OR UNDER MY SUPERVISION

GEORGE K. NISHIMURA — REGISTERED PROFESSIONAL ENGINEER No. 1388 — HAWAII, U.S.A.

THIS WORK WAS PREPARED BY ME OR UNDER MY SUPERVISION

STATE OF HAWAII
DEPARTMENT OF TRANSPORTATION
HIGHWAYS DIVISION

NIMITZ CONNECTOR (E.B.), RAMP "A" & RAMP "B"

PIER A7 DETAIL

KEEHI INTERCHANGE

F.A.I. PROJ. NO. I-HI-1(168)17

Scale: As shown — Date: JULY, 1981

SHEET No. S-25 OF 49 SHEETS

ORIGINAL PLAN	SURVEY PLOTTED BY	DATE
	DRAWN BY	
	TRACED BY	
NOTE BOOK	DESIGNED BY	
	QUANTITIES BY	
NO.	CHECKED BY	

PRINTED ON NO. 1000H CLEARPRINT

FED. ROAD DIST. NO.	STATE	FED. AID PROJ. NO.	FISCAL YEAR	SHEET NO.	TOTAL SHEETS
HAWAII	HAW.	I-HI-1(168)17	1982	108	145

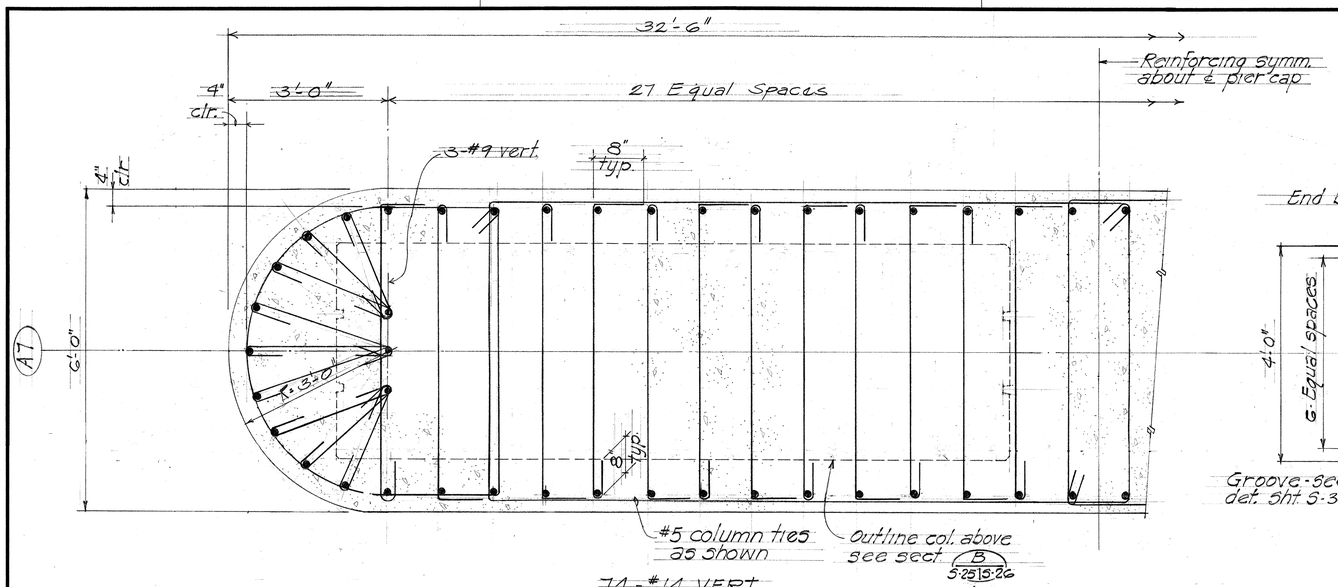

74-#14 VERT.

SECTION A 5-25 5-26
Scale 3/4" = 1'-0"

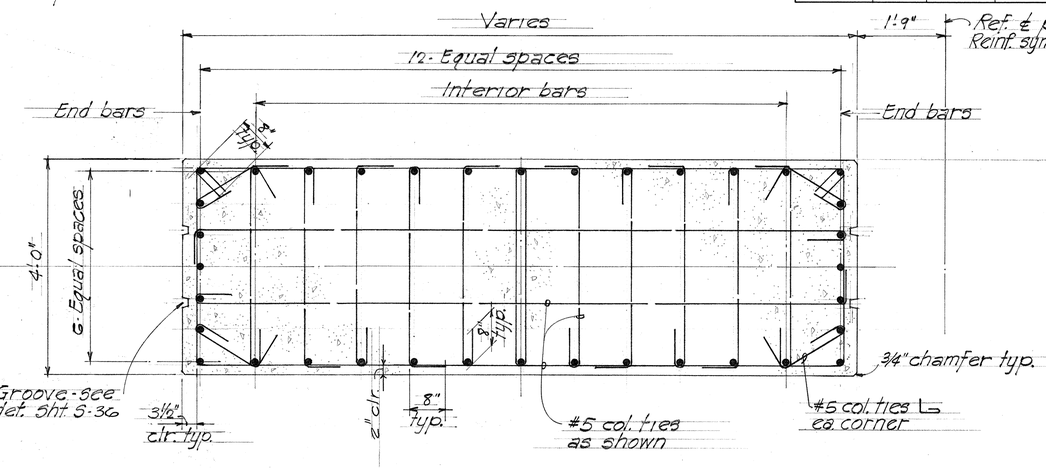

36-#14 VERT.

SECTION B 5-25 5-26
Scale 3/4" = 1'-0"

NOTE:
1. All #18 & #14 bars shall be grade 60.
2. Adjust pier cap top main reinforcing spacing to clear bearing plate anchor bolts.

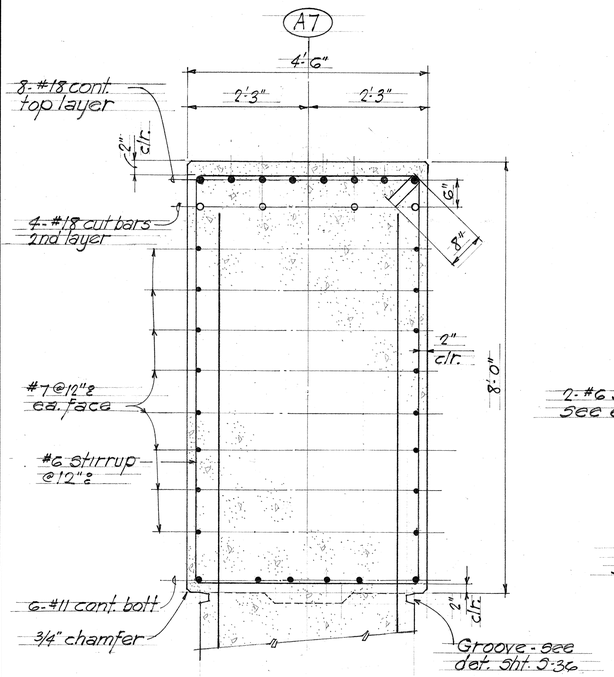

SECTION C 5-25 5-26
Scale 3/4" = 1'-0"

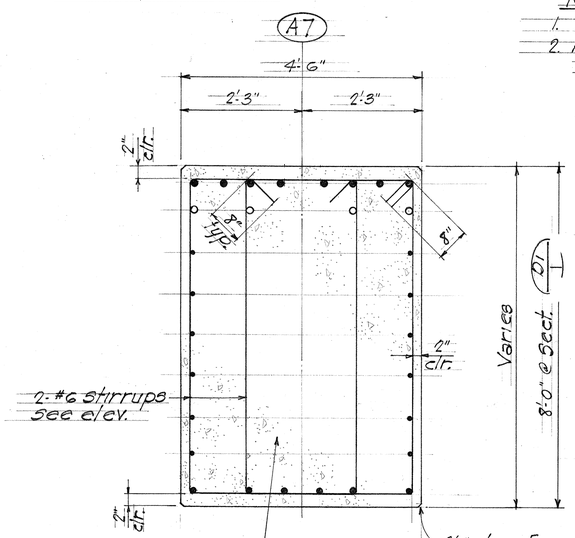

NOTE:
Sect. D1 5-25 5-26 similar except as noted.

SECTION D 5-25 5-26
Scale 3/4" = 1'-0"

ORIGINAL PLAN		DATE
	SURVEY PLOTTED BY	
	DRAWN BY	
	TRACED BY	
NOTE BOOK	DESIGNED BY	
	QUANTITIES BY	
No.	CHECKED BY	

HAROLD TAKASHI MIYAMOTO — REGISTERED PROFESSIONAL ENGINEER No. 1514 — HAWAII, U.S.A.

GEORGE K. NISHIMURA — REGISTERED PROFESSIONAL ENGINEER No. 1388 — HAWAII, U.S.A.

THIS WORK WAS PREPARED BY ME OR UNDER MY SUPERVISION

THIS WORK WAS PREPARED BY ME OR UNDER MY SUPERVISION

STATE OF HAWAII
DEPARTMENT OF TRANSPORTATION
HIGHWAYS DIVISION

NIMITZ CONNECTOR (E.B.)
RAMP "A" & RAMP "B"
PIER A-7 DETAIL

KEEHI INTERCHANGE

FAI PROJ. NO. I-HI-1(168)17

Scale: As shown — Date: JULY, 1981

SHEET No. 5-26 OF 49 SHEETS

PRINTED ON NO. 1000H CLEARPRINT

FED. ROAD DIST. NO.	STATE	FED. AID PROJ. NO.	FISCAL YEAR	SHEET NO.	TOTAL SHEETS
HAWAII	HAW.	I-HI-I(168)17	1982	109	145

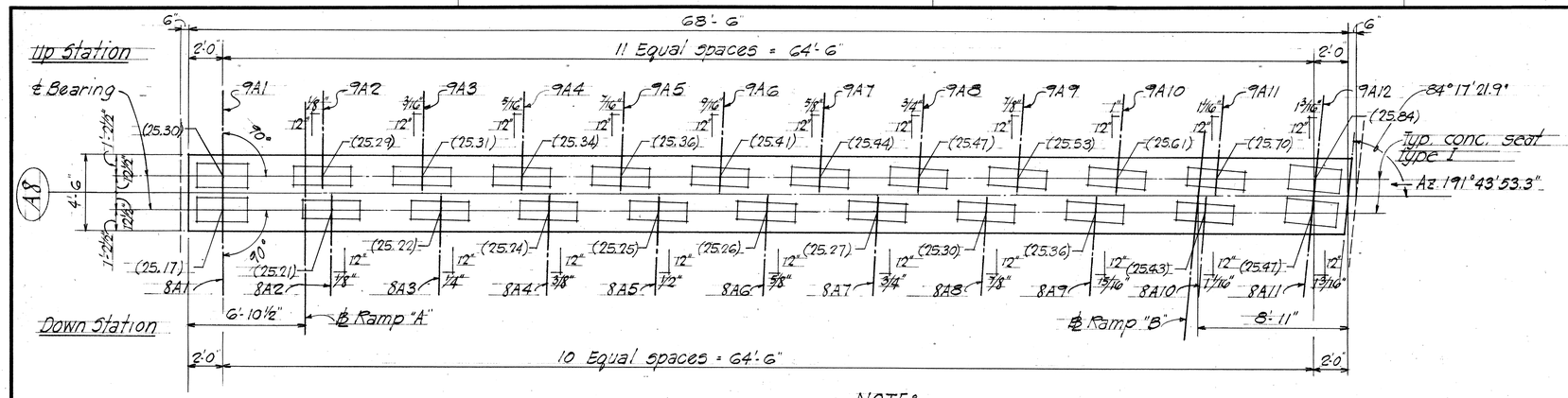

PLAN ~ PIER (A8)

Scale ¼" = 1'-0"

NOTE:
(00.00) Denotes top of concrete seat elevation.

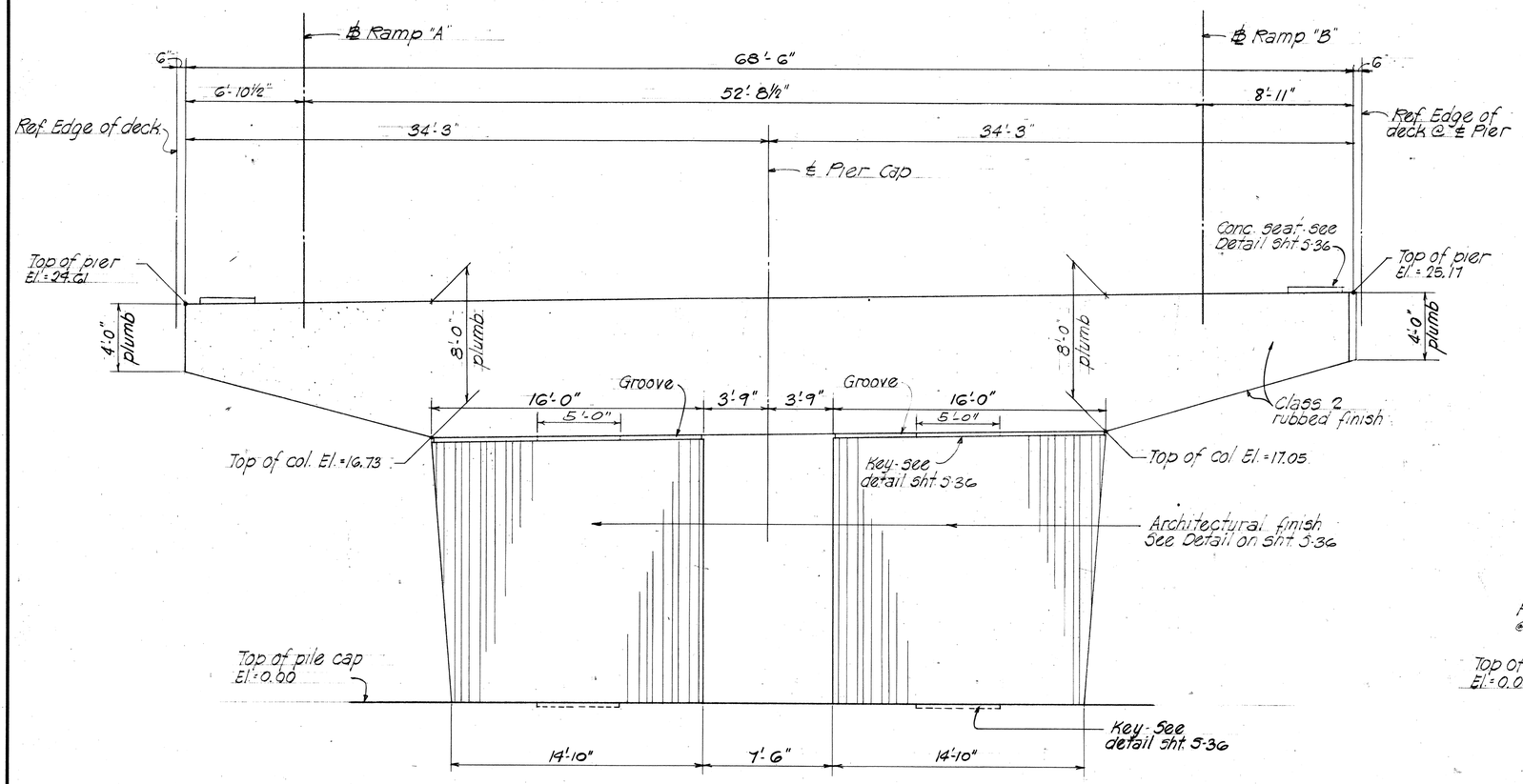

ELEVATION ~ PIER (A8)

Scale ¼" = 1'-0"

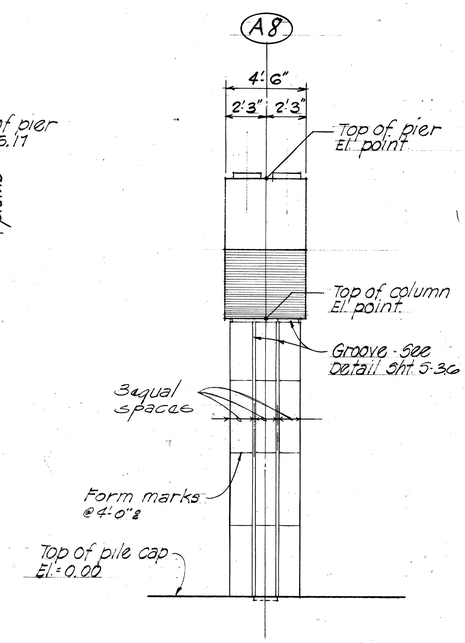

END ELEVATION

Scale ¼" = 1'-0"

HAROLD TAKASHI MIYAMOTO — REGISTERED PROFESSIONAL ENGINEER No. 1514 — HAWAII, U.S.A.

GEORGE K. NISHIMURA — REGISTERED PROFESSIONAL ENGINEER No. 1388 — HAWAII, U.S.A.

THIS WORK WAS PREPARED BY ME OR UNDER MY SUPERVISION

THIS WORK WAS PREPARED BY ME OR UNDER MY SUPERVISION

STATE OF HAWAII
DEPARTMENT OF TRANSPORTATION
HIGHWAYS DIVISION

NIMITZ CONNECTOR (E.B.), RAMP "A" & RAMP "B"

PIER A8 DETAIL

KEEHI INTERCHANGE

F.A.I. PROJ. NO. I-HI-I(168)17

Scale: As shown — Date: JULY, 1981

SHEET No. S-27 OF 49 SHEETS

ORIGINAL PLAN — NOTE BOOK — No.
SURVEY PLOTTED BY — DRAWN BY — TRACED BY — DESIGNED BY — QUANTITIES BY — CHECKED BY — DATE

PRINTED ON NO. 1000H CLEARPRINT

FED. ROAD DIST. NO.	STATE	FED. AID PROJ. NO.	FISCAL YEAR	SHEET NO.	TOTAL SHEETS
HAWAII	HAW.	I-HI-1(168)17	1982	110	145

NOTE:
All #18 and #14 bars shall be grade 60.

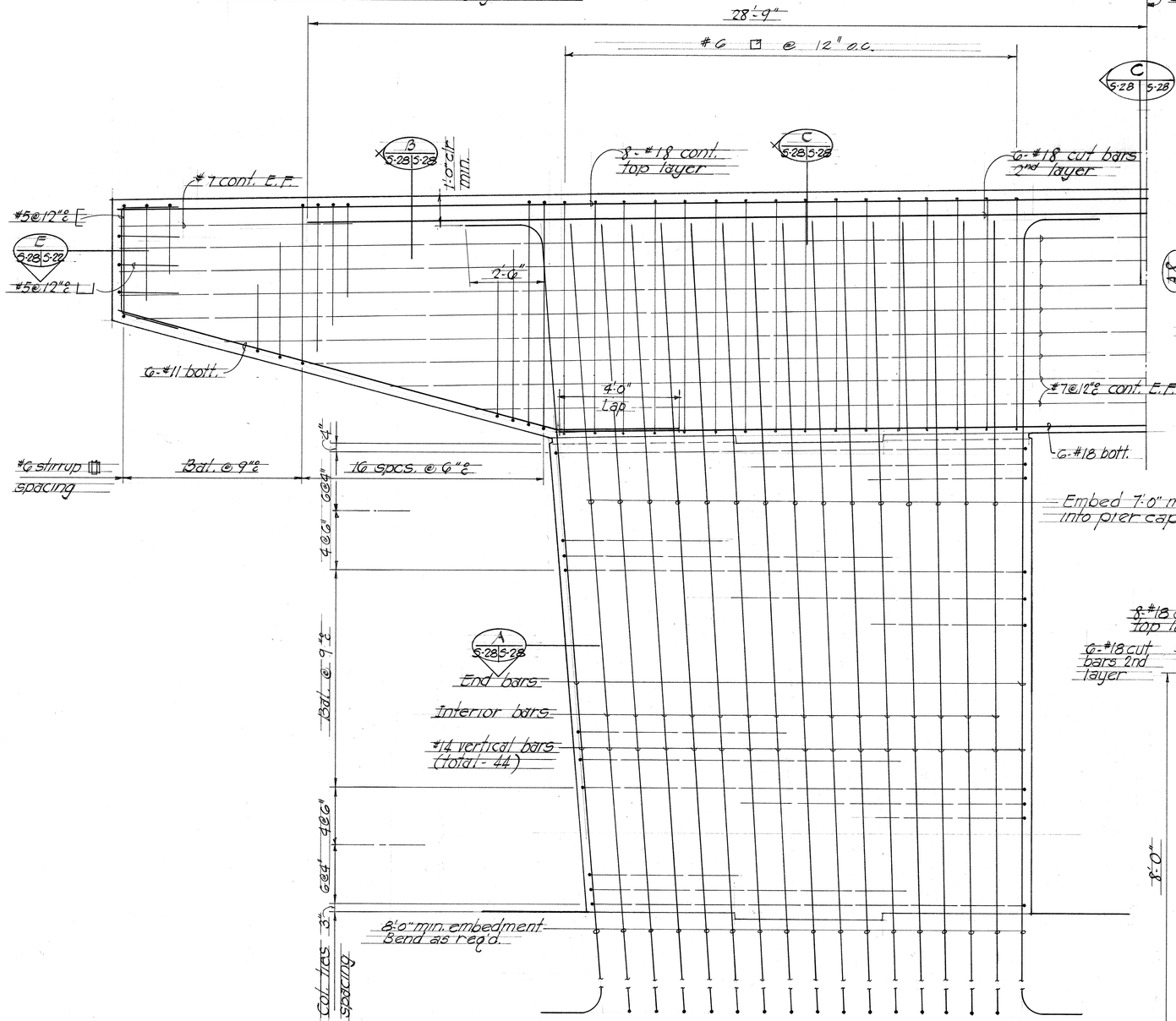

REINFORCEMENT DETAIL PIER (A8)
Scale 1/2" = 1'-0"

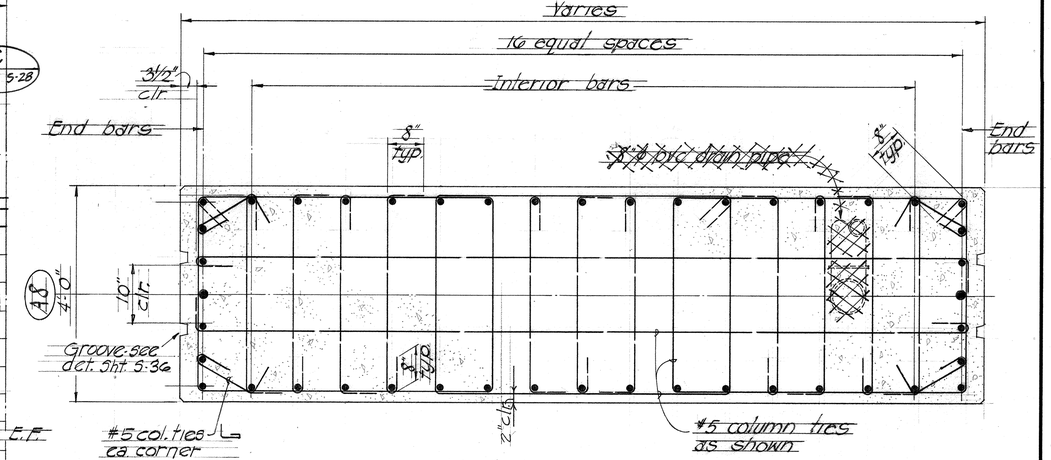

SECTION (A) 5-28 5-28
Scale : 3/4" = 1'-0"

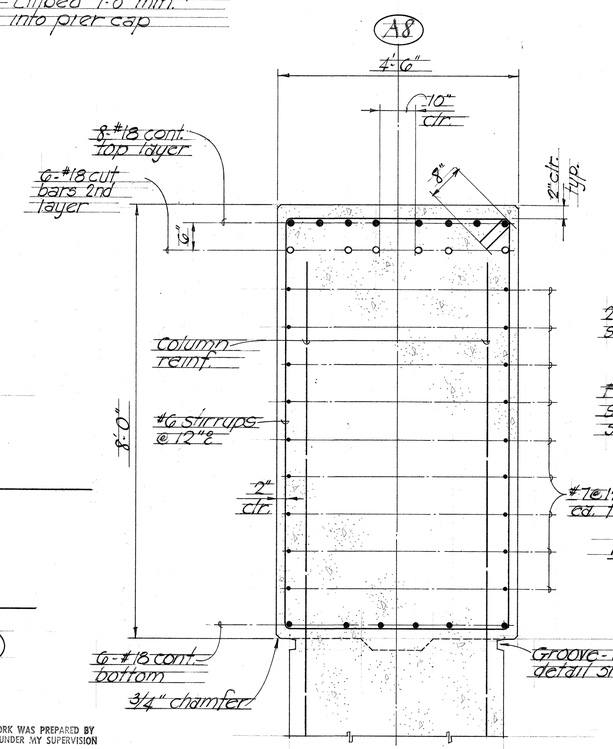

SECTION (C) 5-28 5-28
Scale : 3/4" = 1'-0"

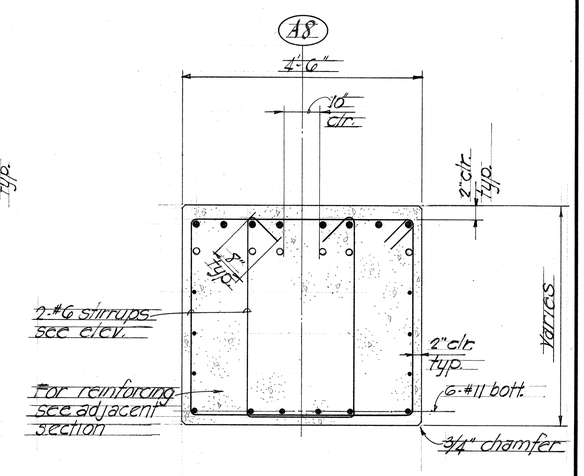

SECTION (B) 5-28 5-28
Scale : 3/4" = 1'-0"

NOTE:
Adjust pier cap top main reinforcing spacing to clear bearing plate anchor bolts.

HAROLD TAKASHI MIYAMOTO REGISTERED PROFESSIONAL ENGINEER No. 1514 HAWAII, U.S.A.

GEORGE K. NISHIMURA REGISTERED PROFESSIONAL ENGINEER No. 1388 HAWAII, U.S.A.

THIS WORK WAS PREPARED BY ME OR UNDER MY SUPERVISION
Howard Nijamura

THIS WORK WAS PREPARED BY ME OR UNDER MY SUPERVISION
G K Nishimura

STATE OF HAWAII
DEPARTMENT OF TRANSPORTATION
HIGHWAYS DIVISION

NIMITZ CONNECTOR (E.B.), RAMP "A" & RAMP "B"
PIER A8 DETAIL

KEEHI INTERCHANGE

F.A.I. PROJ. NO. I-HI-1 (168)17

Scale : As shown Date : JULY, 1981

SHEET No. 5-28 OF 49 SHEETS

ORIGINAL PLANS	SURVEY PLOTTED BY	DATE
	DRAWN BY	"
	TRACED BY	"
NOTE BOOK	DESIGNED BY	"
	QUANTITIES BY	"
No.	CHECKED BY	"

PRINTED ON NO. 1000H CLEARPRINT

FED. ROAD DIST. NO.	STATE	FED. AID PROJ. NO.	FISCAL YEAR	SHEET NO.	TOTAL SHEETS
HAWAII	HAW.	HI-1(68)17	1982	111	145

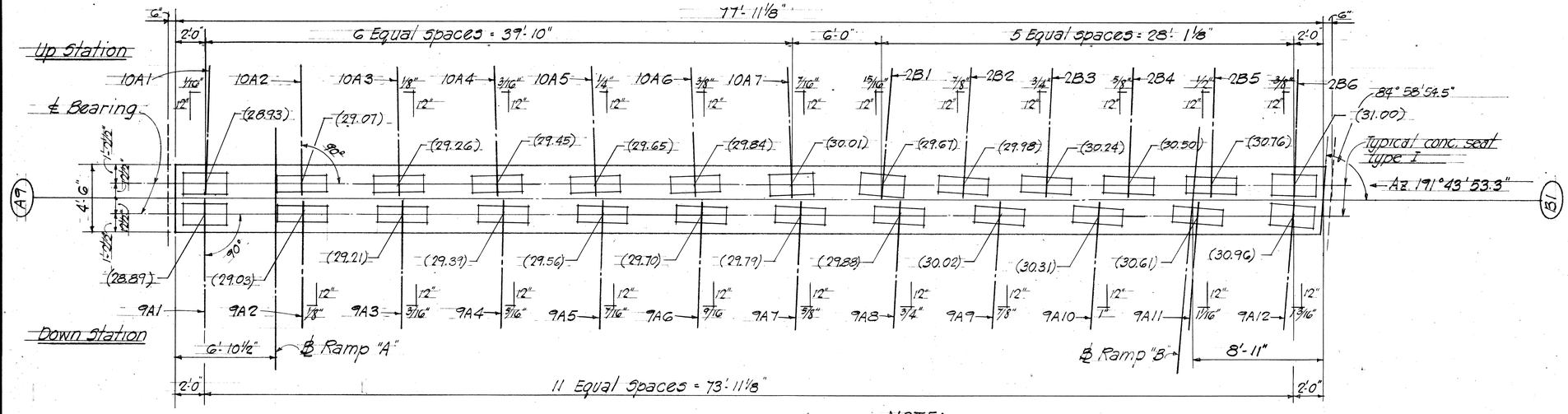

PLAN ~ PIER A9 & B1

Scale 1/4" = 1'-0"

NOTE:
(00.00) Denotes top of concrete seat elevation.

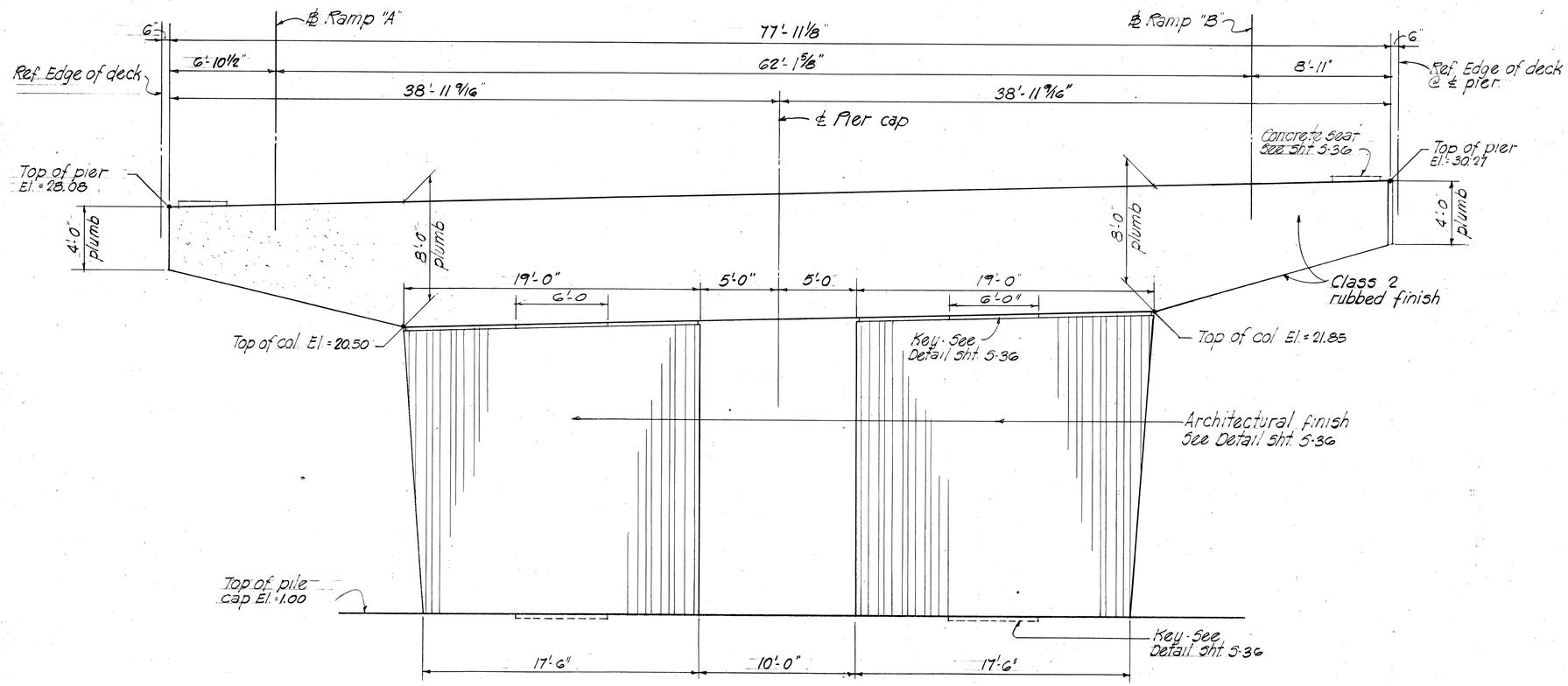

ELEVATION ~ PIER A9 & B1

Scale 1/4" = 1'-0"

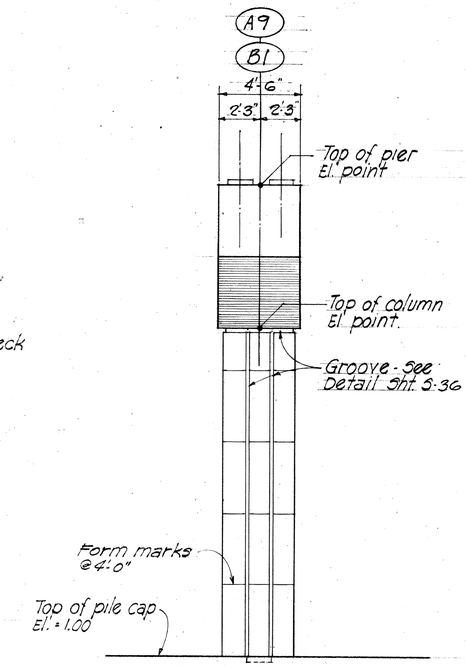

END ELEVATION

Scale 1/4" = 1'-0"

HAROLD TAKASHI MIYAMOTO — REGISTERED PROFESSIONAL ENGINEER No. 1514 — HAWAII, U.S.A.

THIS WORK WAS PREPARED BY ME OR UNDER MY SUPERVISION

GEORGE K. NISHIMURA — REGISTERED PROFESSIONAL ENGINEER No. 1388 — HAWAII, U.S.A.

THIS WORK WAS PREPARED BY ME OR UNDER MY SUPERVISION

STATE OF HAWAII
DEPARTMENT OF TRANSPORTATION
HIGHWAYS DIVISION

NIMITZ CONNECTOR (E.B.),
RAMP "A" & RAMP "B"
PIER A9 & B1 DETAIL
KEEHI INTERCHANGE
F.A.I. PROJ. NO. 1-HI-1 (168)17

Scale: As shown — Date: JULY, 1981

SHEET No. S-29 OF 49 SHEETS

ORIGINAL PLAN	SURVEY PLOTTED BY	DATE
	DRAWN BY	
	TRACED BY	
NOTE BOOK	DESIGNED BY	
	QUANTITIES BY	
No.	CHECKED BY	

PRINTED ON NO. 1000H CLEARPRINT

111

FED. ROAD DIST. NO.	STATE	FED. AID PROJ. NO.	FISCAL YEAR	SHEET NO.	TOTAL SHEETS
HAWAII	HAW.	I-H1-1(168)17	1982	112	145

NOTE: All #18 & #14 bars shall be grade 60.

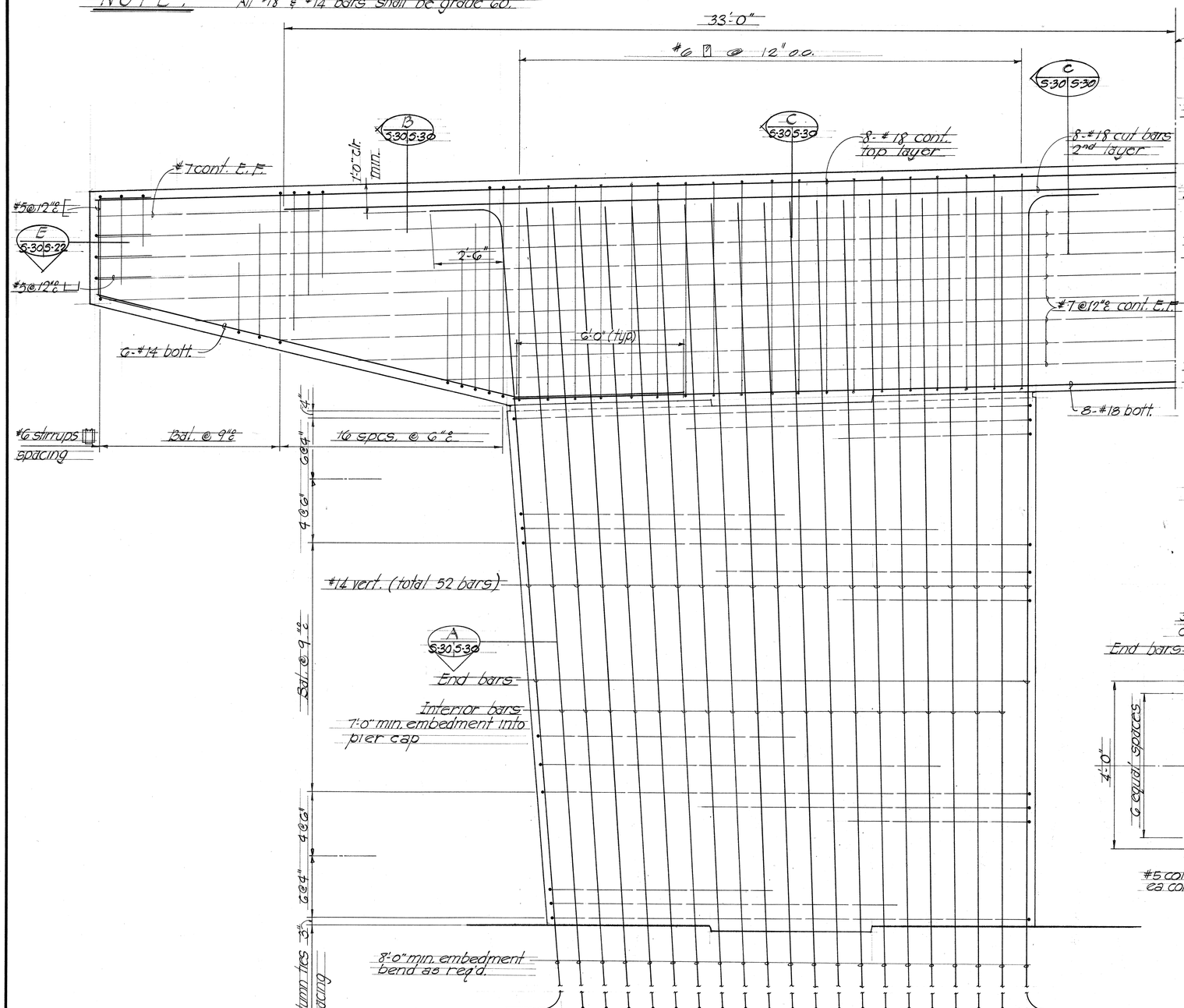

REINFORCEMENT DETAIL ~ PIER A9 & B1

Scale 1/2" = 1'-0"

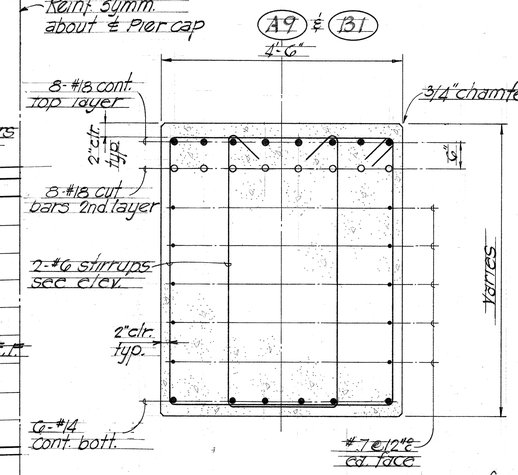

SECTION B 5-30 5-30

Scale: 3/4" = 1'-0"

NOTE:
Adjust pier cap top main reinforcing spacing to clear bearing plate anchor bolts.

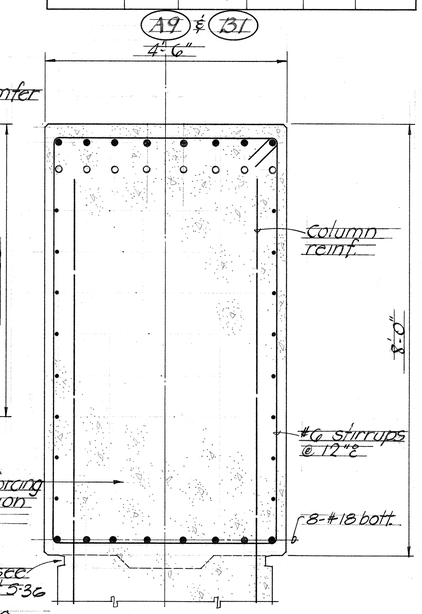

SECTION C 5-30 5-30

Scale: 3/4" = 1'-0"

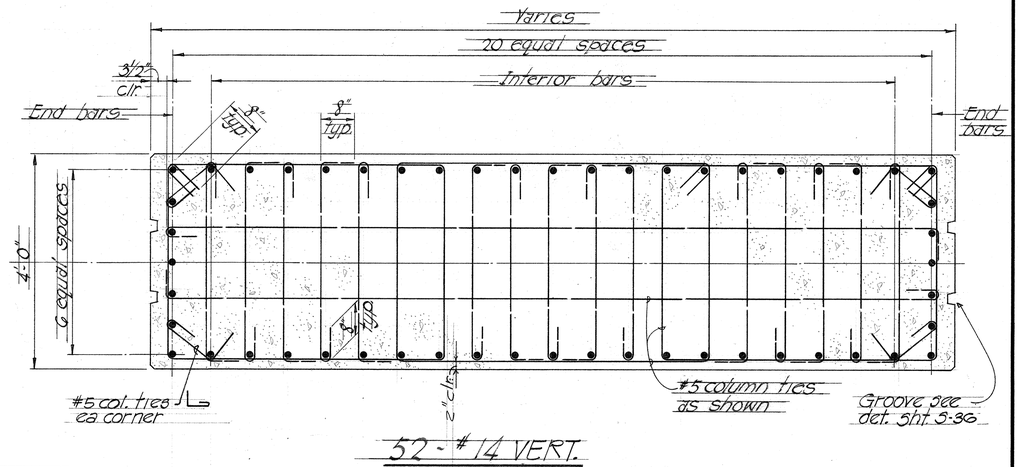

52 - #14 VERT.

SECTION A 5-30 5-30

Scale: 3/4" = 1'-0"

ORIGINAL PLAN	SURVEY PLOTTED BY	DATE
	DRAWN BY	
	TRACED BY	
NOTE BOOK	DESIGNED BY	
	QUANTITIES BY	
No.	CHECKED BY	

HAROLD TAKASHI MIYAMOTO — REGISTERED PROFESSIONAL ENGINEER No. 1514 — HAWAII, U.S.A.

GEORGE K. NISHIMURA — REGISTERED PROFESSIONAL ENGINEER No. 1388 — HAWAII, U.S.A.

THIS WORK WAS PREPARED BY ME OR UNDER MY SUPERVISION

THIS WORK WAS PREPARED BY ME OR UNDER MY SUPERVISION

STATE OF HAWAII
DEPARTMENT OF TRANSPORTATION
HIGHWAYS DIVISION

NIMITZ CONNECTOR (E.B.)
RAMP "A" & RAMP "B"
PIER A9 & B1 DETAIL
KEEHI INTERCHANGE
F.A.I. PROJ. NO. I-H1-1(168)17

Scale: As shown — Date: JULY, 1981

SHEET NO. 5-30 OF 49 SHEETS

PRINTED ON NO. 1000H CLEARPRINT

FED. ROAD DIST. NO.	STATE	FED. AID PROJ. NO.	FISCAL YEAR	SHEET NO.	TOTAL SHEETS
HAWAII	HAW.	I-HI-1(68)17	1982	113	145

NOTE:
All #18 & #14 bars shall be grade 60.

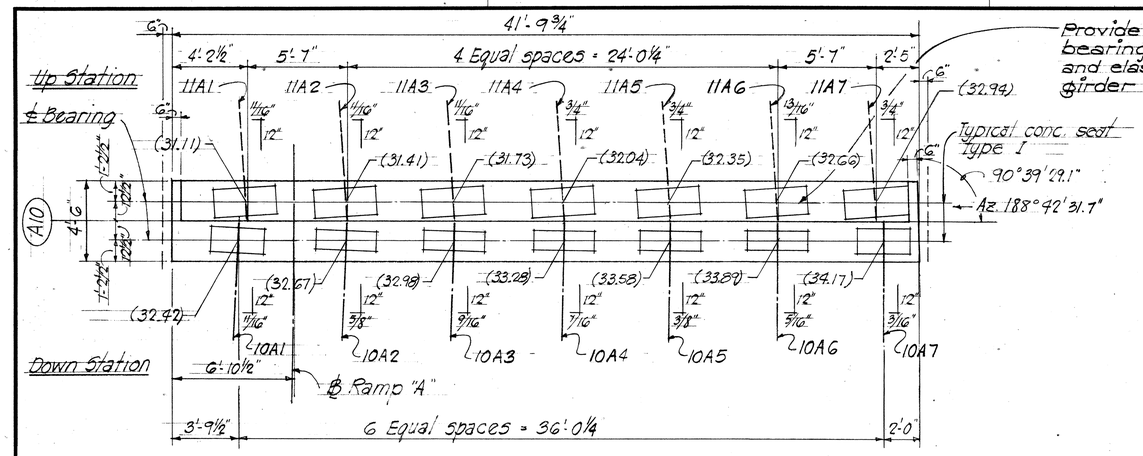

PLAN ~ PIER (A10)
Scale 1/4"=1'-0"

NOTE:
(00.00) Denotes top of concrete seat elevation.

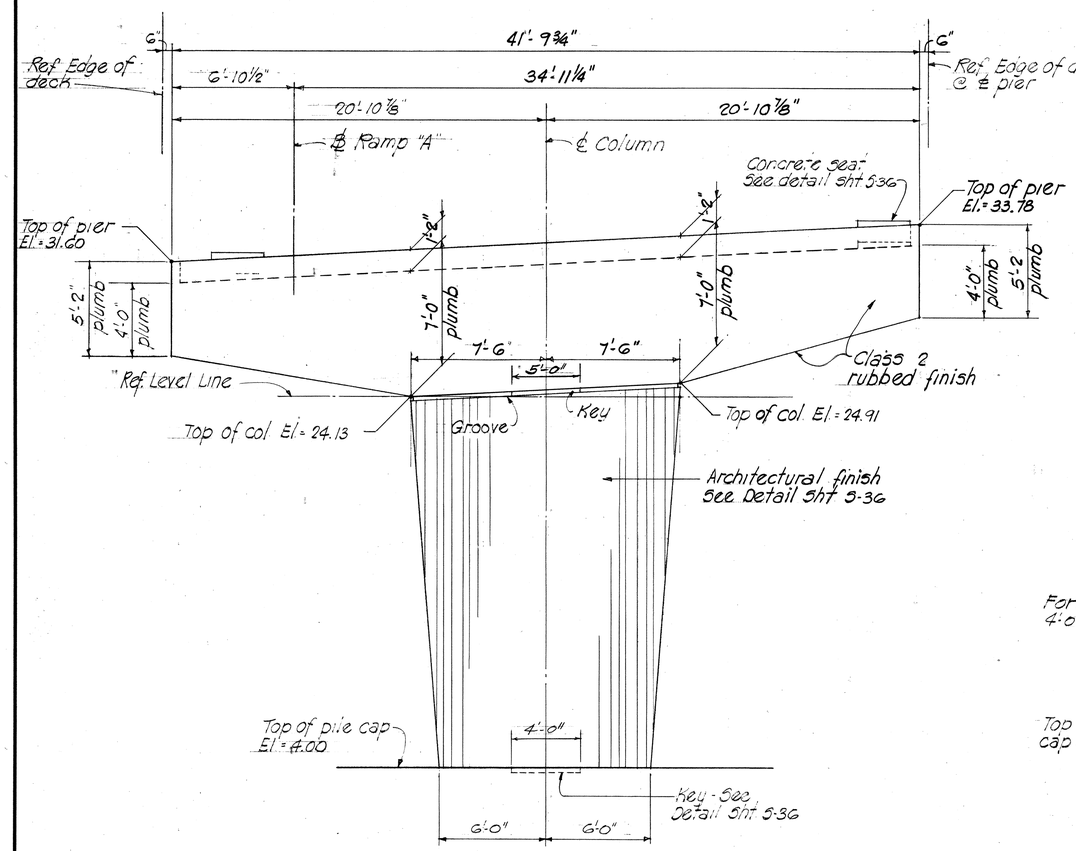

ELEVATION ~ PIER (A10)
Scale 1/4"=1'-0"

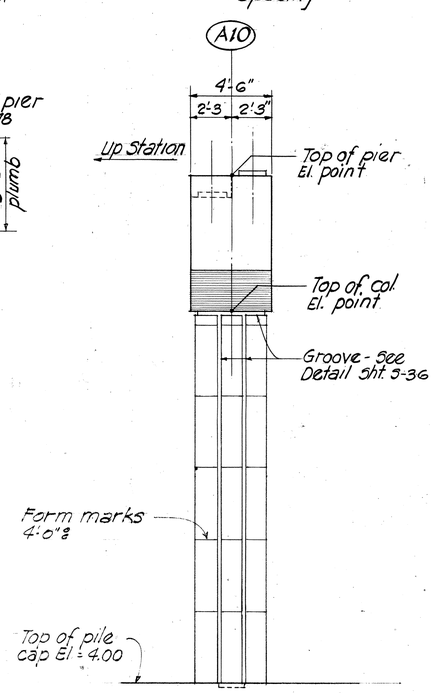

END ELEVATION
Scale 1/4"=1'-0"

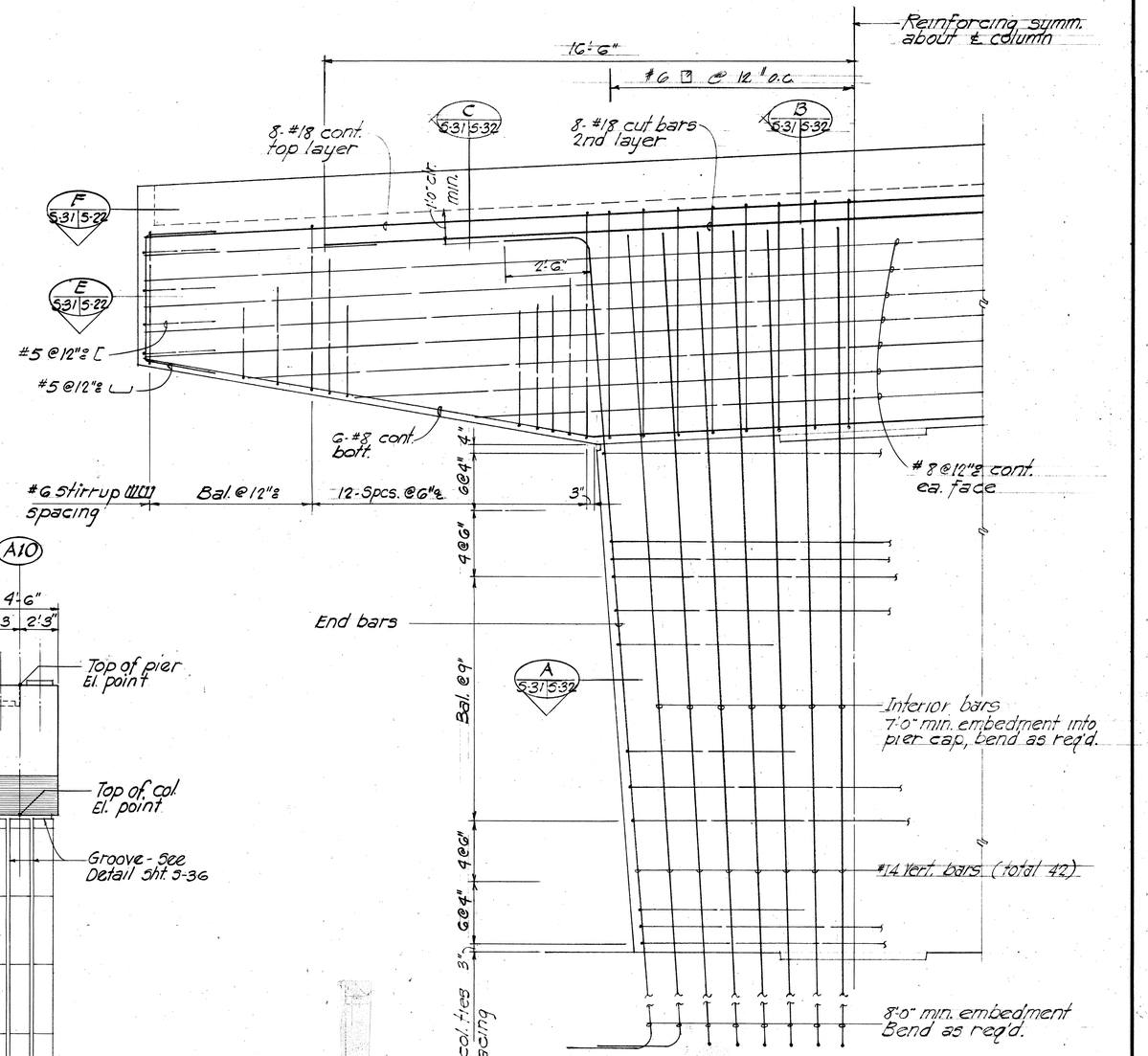

REINFORCEMENT DETAIL ~ PIER (A10)
Scale 1/2"=1'-0"

ORIGINAL PLAN	SURVEY PLOTTED BY	DATE
	DRAWN BY	
	TRACED BY	
NOTE BOOK	DESIGNED BY	
	QUANTITIES BY	
No.	CHECKED BY	

HAROLD TAKAEMI MIYAMOTO REGISTERED PROFESSIONAL ENGINEER No. 1514 HAWAII U.S.A.

THIS WORK WAS PREPARED BY ME OR UNDER MY SUPERVISION

DENNIS K. NISHIMURA REGISTERED PROFESSIONAL ENGINEER No. 1388 HAWAII U.S.A.

THIS WORK WAS PREPARED BY ME OR UNDER MY SUPERVISION

STATE OF HAWAII
DEPARTMENT OF TRANSPORTATION
HIGHWAYS DIVISION

NIMITZ CONNECTOR (E.B.), RAMP "A" & RAMP "B"
PIER A10 DETAIL
KEEHI INTERCHANGE
F.A.I. PROJ. NO. I-HI-1 (168)17
Scale: As shown Date: JULY, 1981

SHEET No. 5-31 OF 49 SHEETS

PRINTED ON NO. 1000H CLEARPRINT

FED. ROAD DIST. NO.	STATE	FED. AID PROJ. NO.	FISCAL YEAR	SHEET NO.	TOTAL SHEETS
HAWAII	HAW.	I-HI-1(168)17	1982	114	145

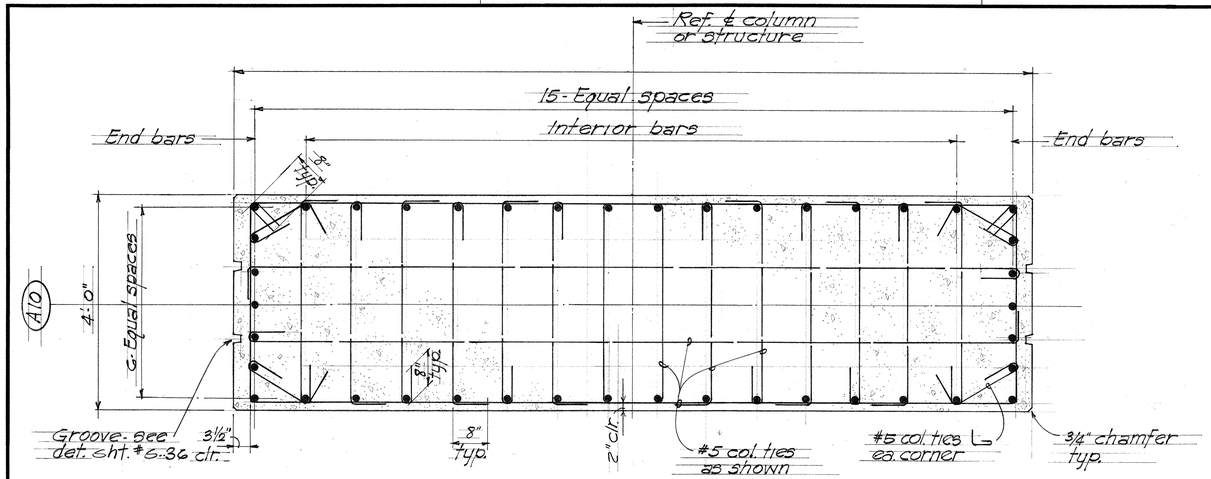

42-#14 VERT.

NOTE:
All #18 & #14 bars shall be grade 60.

SECTION A S-31 | S-32
Scale 3/4"=1'-0"

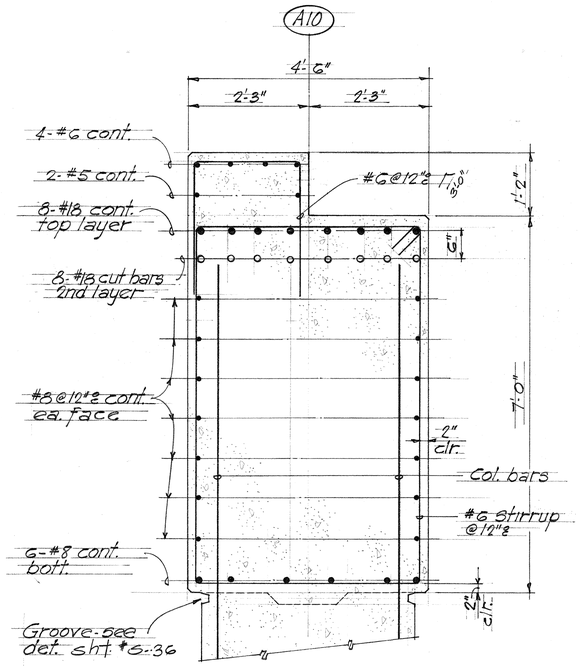

SECTION B S-31 | S-32
Scale 3/4"=1'-0"

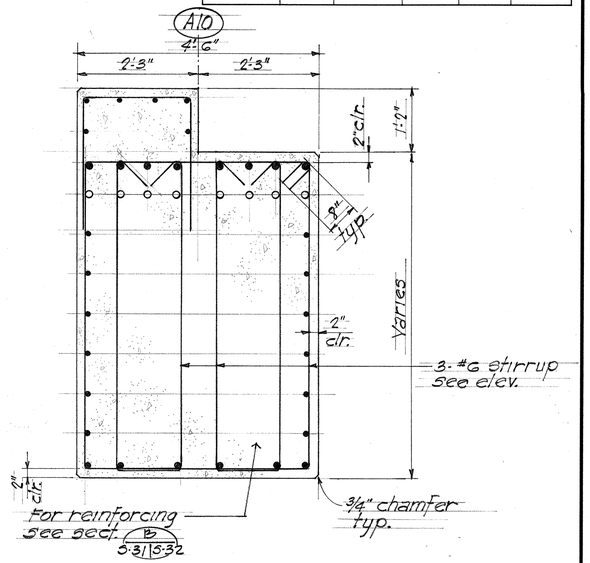

SECTION C S-31 | S-32
Scale 3/4"=1'-0"

NOTE:
Adjust pier cap top main reinforcing spacing to clear bearing plate anchor bolts.

HAROLD TAKASHI MIYAMOTO REGISTERED PROFESSIONAL ENGINEER No. 1514 HAWAII, U.S.A.

THIS WORK WAS PREPARED BY ME OR UNDER MY SUPERVISION

GEORGE K. NISHIMURA REGISTERED PROFESSIONAL ENGINEER No. 1388 HAWAII, U.S.A.

THIS WORK WAS PREPARED BY ME OR UNDER MY SUPERVISION

STATE OF HAWAII
DEPARTMENT OF TRANSPORTATION
HIGHWAYS DIVISION

NIMITZ CONNECTOR (E.B.)
RAMP "A" & RAMP "B"
PIER A10 DETAIL
KEEHI INTERCHANGE
F.A.I. PROJ. NO. I-HI-1 (168)17
Scale: As shown Date: JULY, 1981

SHEET No. S-32 OF 49 SHEETS

ORIGINAL PLAN
SURVEY PLOTTED BY
DRAWN BY
TRACED BY
DESIGNED BY
QUANTITIES BY
CHECKED BY
DATE
NOTE BOOK
No.

PRINTED ON NO. 1000H CLEARPRINT

114

FED. ROAD DIST. NO.	STATE	FED. AID PROJ. NO.	FISCAL YEAR	SHEET NO.	TOTAL SHEETS
HAWAII	HAW.	I-HI-1(168)17	1982	115	149

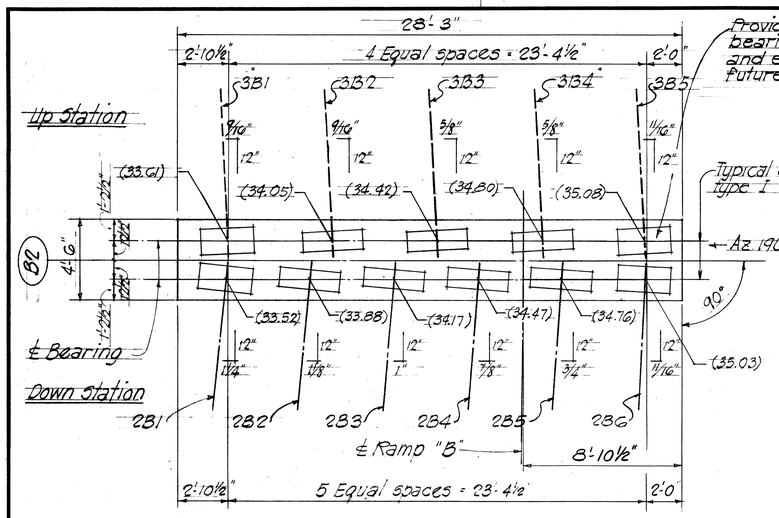

Provide anchor bolts bevelled bearing plates, nuts washers, and elastomeric pads for future girder installation

Typical conc. seat type I (B2)

NOTE:
(00.00) Denotes top of concrete seat elevation

PLAN ~ PIER (B2)
Scale 1/4" = 1'-0"

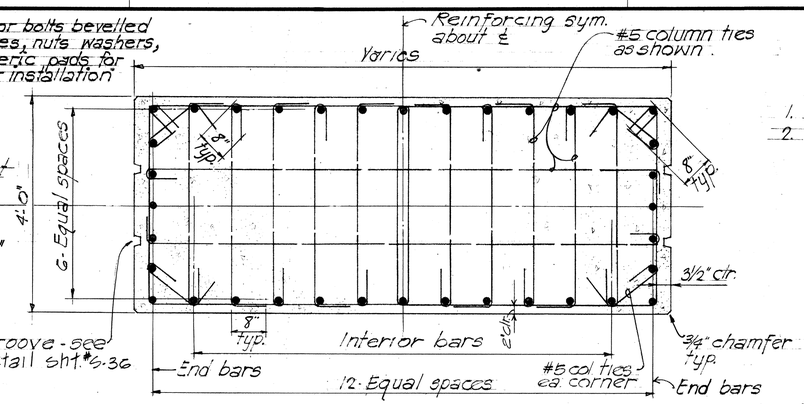

36-#14 VERT.

SECTION (A 5-33|5-33)
Scale 3/4" = 1'-0"

NOTE:
1. All #18 & #14 bars shall be grade 60.
2. Adjust pier cap top main reinforcing spacing to clear bearing plate anchor bolts.

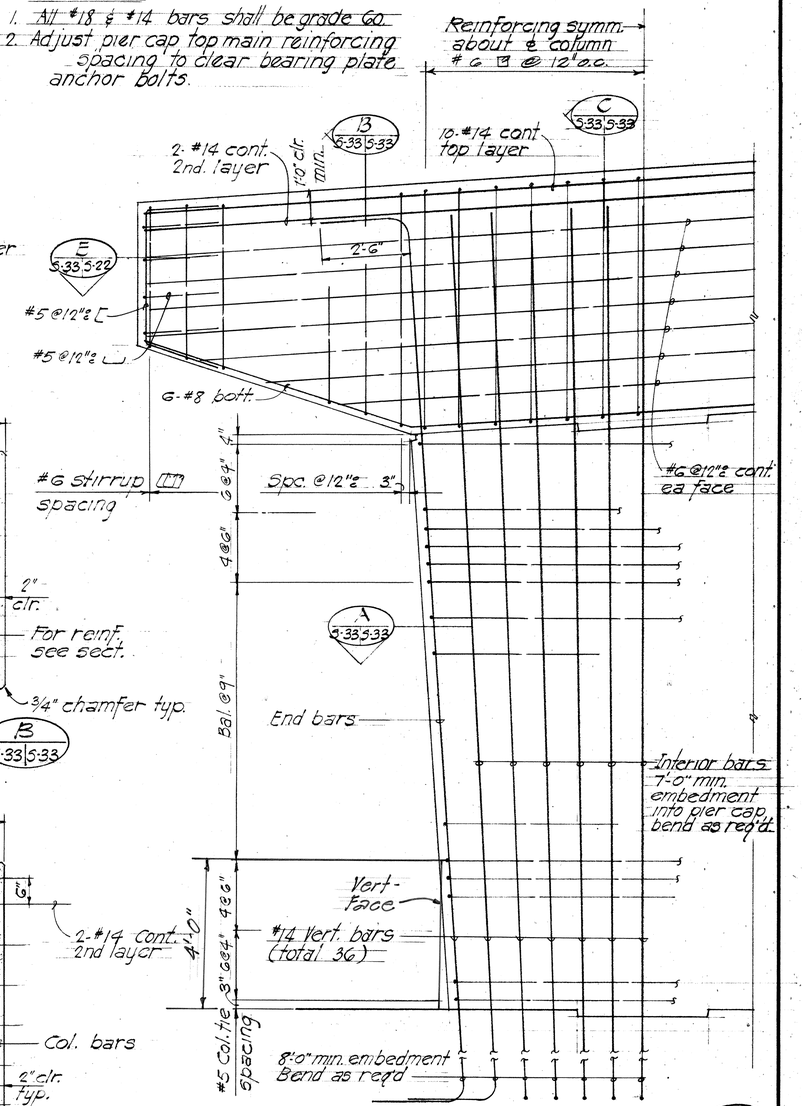

REINFORCEMENT DETAIL PIER (B2)
Scale 1/2" = 1'-0"

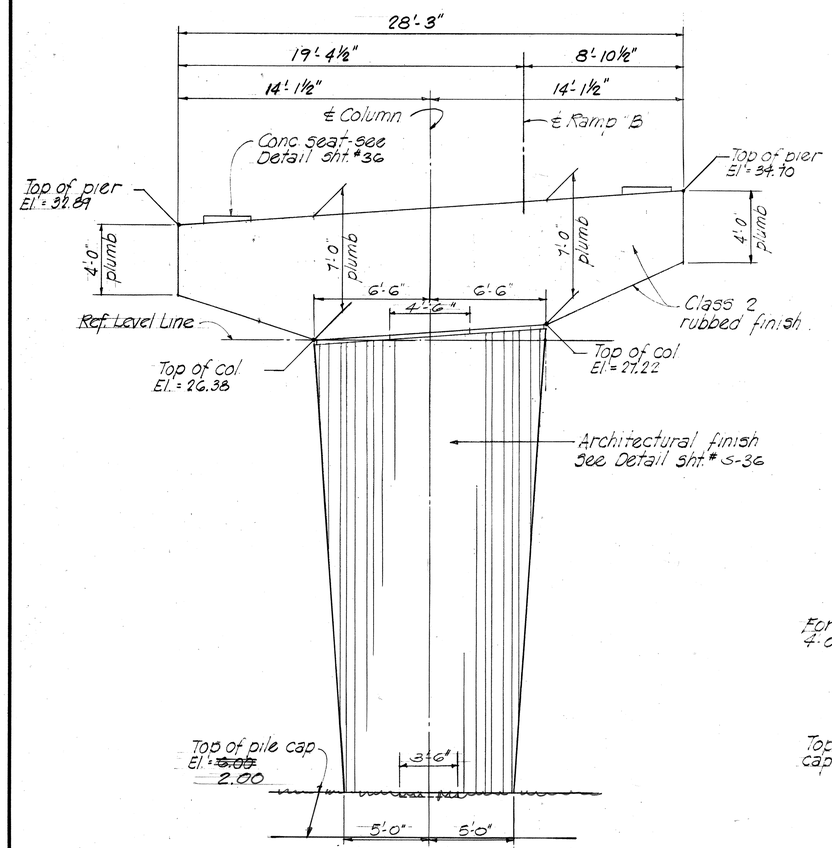

ELEVATION ~ PIER (B2)
Scale 1/4" = 1'-0"

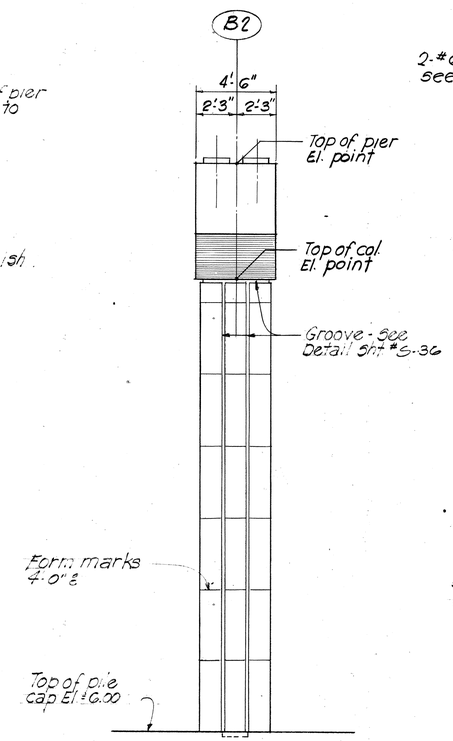

END ELEVATION
Scale 1/4" = 1'-0"

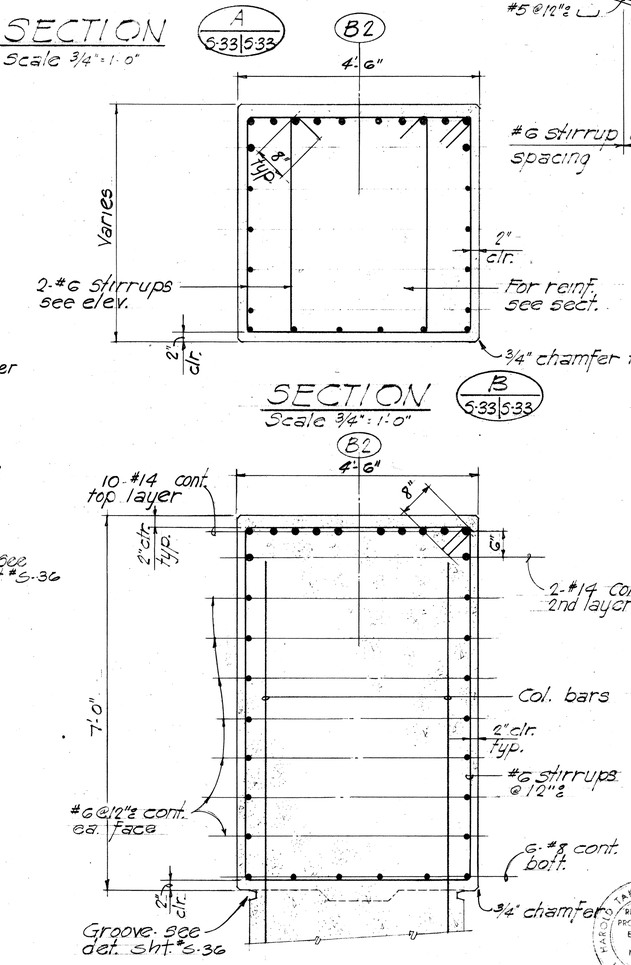

SECTION (C 5-33|5-33)
Scale 3/4" = 1'-0"

THIS WORK WAS PREPARED BY ME OR UNDER MY SUPERVISION
HAROLD TAKASHI MIYAMOTO REGISTERED PROFESSIONAL ENGINEER No. 1514 HAWAII, U.S.A.

THIS WORK WAS PREPARED BY ME OR UNDER MY SUPERVISION
GEORGE K. NISHIKAWA REGISTERED PROFESSIONAL ENGINEER No. 1599 HAWAII, U.S.A.

STATE OF HAWAII
DEPARTMENT OF TRANSPORTATION
HIGHWAYS DIVISION

NIMITZ CONNECTOR (E.B.)
RAMP "A" & RAMP "B"
PIER B2 DETAIL
KEEHI INTERCHANGE
F.A.I. PROJ. NO. I-HI-1 (168)17

Scale: As shown Date: JULY, 1981

SHEET No. 5-33 OF 49 SHEETS

ORIGINAL PLAN		
	SURVEY PLOTTED BY	DATE
	DRAWN BY	
	TRACED BY	
NOTE BOOK	DESIGNED BY	
	QUANTITIES BY	
No.	CHECKED BY	

PRINTED ON NO. 1000H CLEARPRINT

FED. ROAD DIST. NO.	STATE	FED. AID PROJ. NO.	FISCAL YEAR	SHEET NO.	TOTAL SHEETS
HAWAII	HAW.	I-HI-1(68)17	1982	116	145

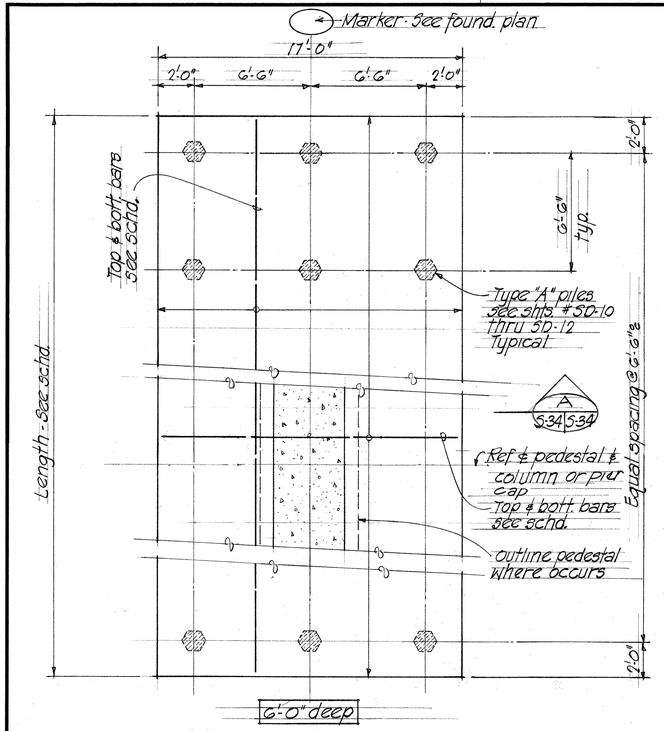

PLAN ~ PILE CAP TYPE "A", "B", "C" & "E"

Scale 1/4"=1'-0"

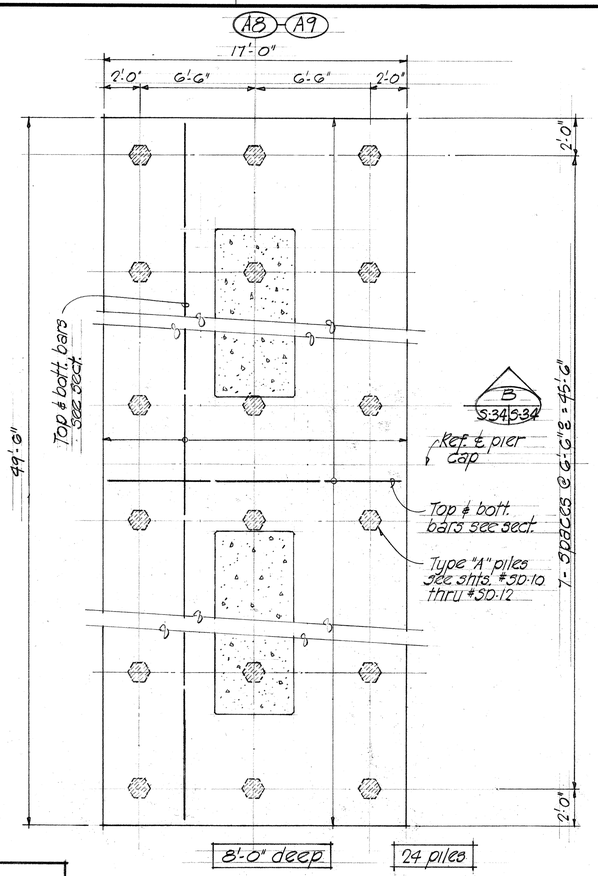

PLAN - PILE CAP TYPE "D"

Scale 1/4"=1'-0"

NOTE:
All #10, #11, #14, & #18 bars to be grade 60.

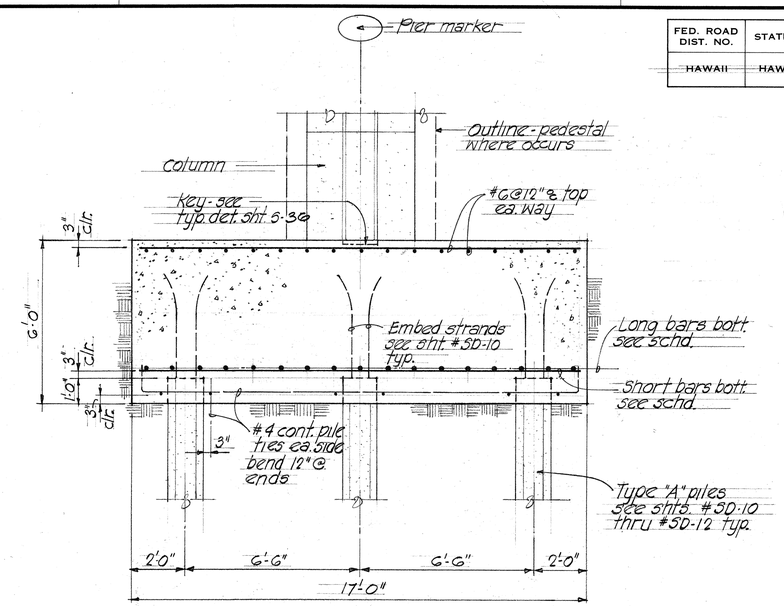

TYP. PILE CAP SECTION @ TYPE "A", "B", "C", & "E"

Scale 3/8"=1'-0"

A
S-34 S-34

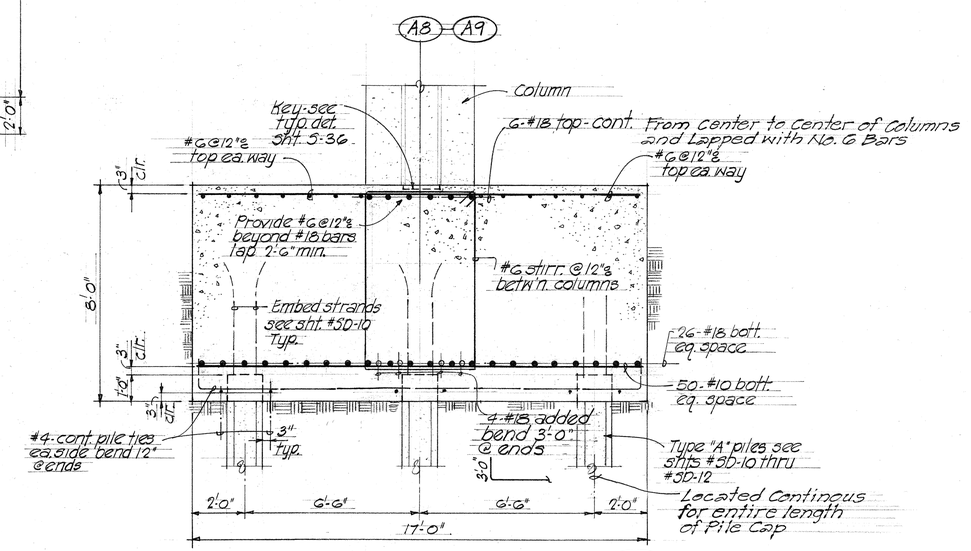

PILE CAP SECTION @ TYPE "D"

Scale 3/8"=1'-0"

B
S-34 S-34

PILE CAP SCHEDULE

Mark Type	Pile cap size	Depth	Reinforcing Top bars	Reinforcing Bott. bars	No. of piles	Remarks
TYPE "A"	17'-0" x 23'-6"	6'-0"	#6@12"± E.W.	24-#11 short 24-#11 long	12-piles	
TYPE "B"	17'-0" x 30'-0"	6'-0"	#6@12"± E.W.	32-#11 short 18-#10 long	15-piles	
TYPE "C"	17'-0" x 36'-6"	6'-0"	#6@12"± E.W.	38-#11 short 18-#10 long	18-piles	
TYPE "E"	17'-0" x 30'-0"	6'-0"	#6@12"± E.W.	38-#11 short 24-#14 long	15-piles	

ORIGINAL PLAN	SURVEY PLOTTED BY	DATE
	DRAWN BY	
	TRACED BY	
NOTE BOOK	DESIGNED BY	
	QUANTITIES BY	
No.	CHECKED BY	

HAROLD TAKASHI MIYAMOTO
REGISTERED PROFESSIONAL ENGINEER
No. 1514
HAWAII, U.S.A.

THIS WORK WAS PREPARED BY ME OR UNDER MY SUPERVISION

GEORGE K. NISHIMURA
REGISTERED PROFESSIONAL ENGINEER
No. 1388
HAWAII, U.S.A.

THIS WORK WAS PREPARED BY ME OR UNDER MY SUPERVISION

STATE OF HAWAII
DEPARTMENT OF TRANSPORTATION
HIGHWAYS DIVISION

NIMITZ CONNECTOR (E.B.)
RAMP "A" & RAMP "B"
PILE CAP DETAILS

KEEHI INTERCHANGE
F.A.I. PROJ. NO. I-HI-1 (168)17

Scale: As shown — Date: JULY, 1981

SHEET No. S-34 OF 49 SHEETS

PRINTED ON NO. 1000H CLEARPRINT

FED. ROAD DIST. NO.	STATE	FED. AID PROJ. NO.	FISCAL YEAR	SHEET NO.	TOTAL SHEETS
HAWAII	HAW.	I-HI-1(168)17	1982	117	145

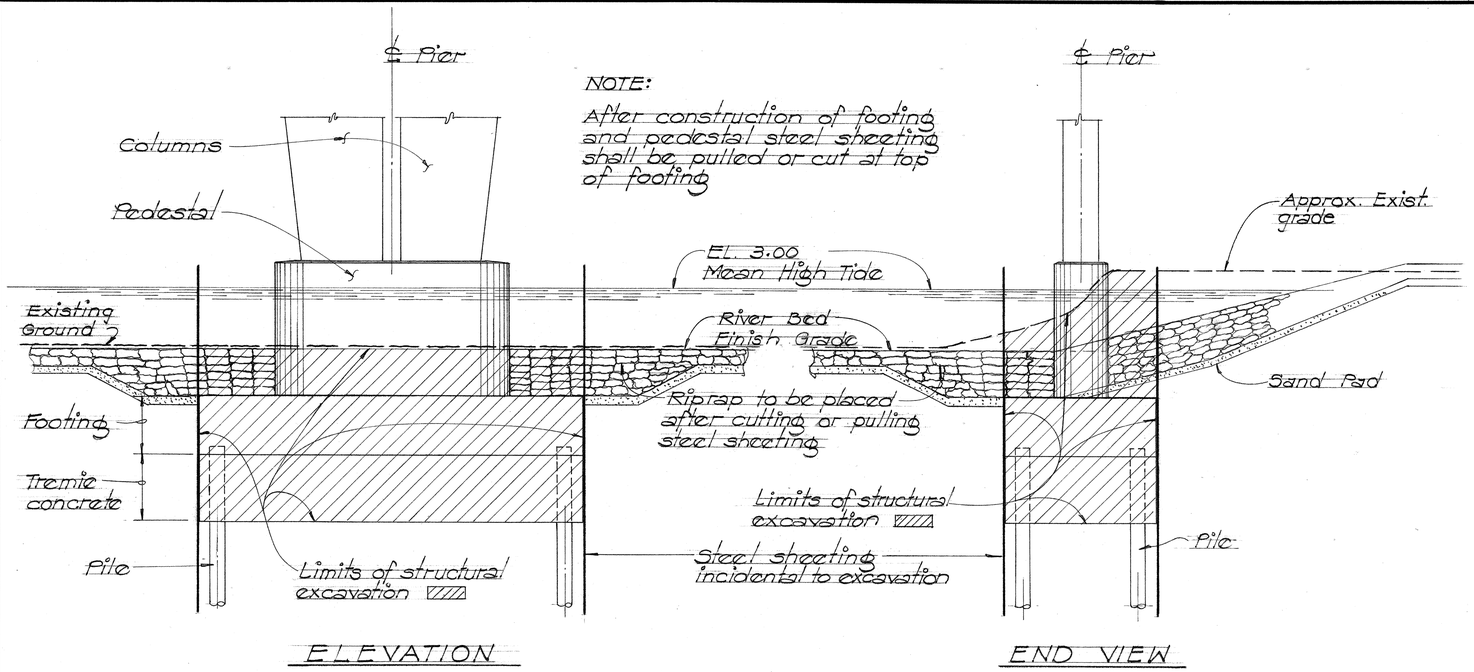

PAY LIMITS

PILE CAP BELOW WATER

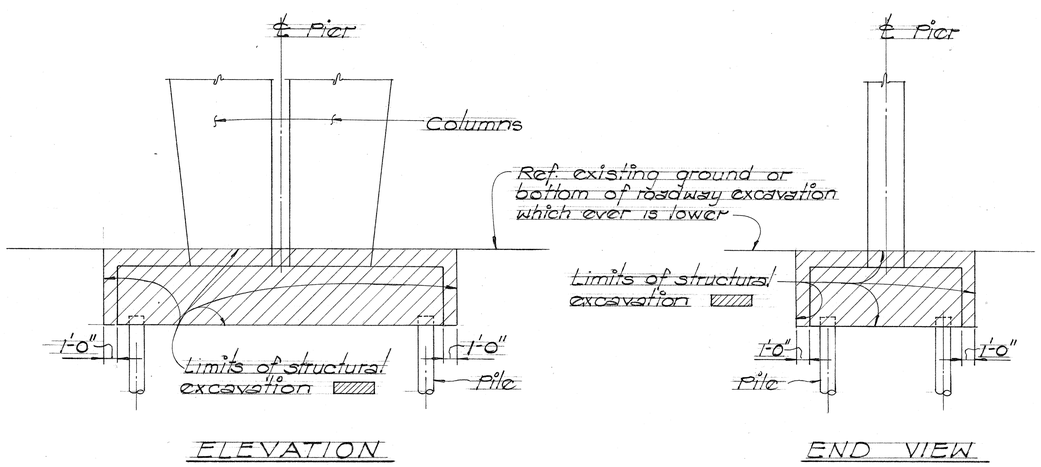

PAY LIMITS

DATE	REVISION
11-4-82	Change limits of structural excavation

GEORGE K. NISHIMURA REGISTERED PROFESSIONAL ENGINEER No. 1388 HAWAII, U.S.A.

THIS WORK WAS PREPARED BY ME OR UNDER MY SUPERVISION

HAROLD TAKASHI MIYAMOTO REGISTERED PROFESSIONAL ENGINEER No. 1514 HAWAII, U.S.A.

THIS WORK WAS PREPARED BY ME OR UNDER MY SUPERVISION

STATE OF HAWAII
DEPARTMENT OF TRANSPORTATION
HIGHWAYS DIVISION

NIMITZ CONNECTOR (EB)
RAMP "A" AND RAMP "B"

PILE CAP PAY LIMITS

KEEHI INTERCHANGE
FAI. PROJ. NO. I-HI-1(168)17

SCALE: AS SHOWN DATE: JULY, 1981

SHEET NO. 5-35 OF 49 SHEETS

ADD. 117

ORIGINAL PLAN		DATE
	SURVEY PLOTTED BY	
	DRAWN BY	
	TRACED BY	
	DESIGNED BY	
NOTE BOOK	QUANTITIES BY	
No.	CHECKED BY	

FED. ROAD DIST. NO.	STATE	FED. AID PROJ. NO.	FISCAL YEAR	SHEET NO.	TOTAL SHEETS
HAWAII	HAW.	I-H1-1(168)17	1982	118	145

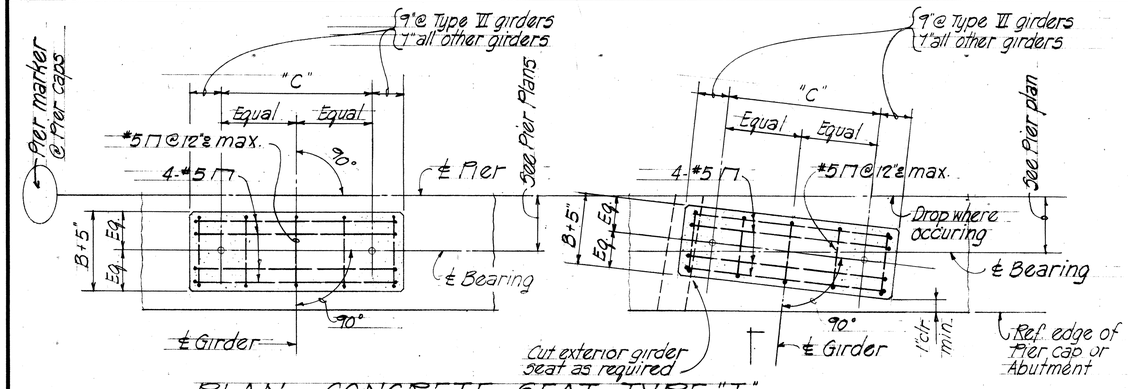

PLAN - CONCRETE SEAT TYPE "I"

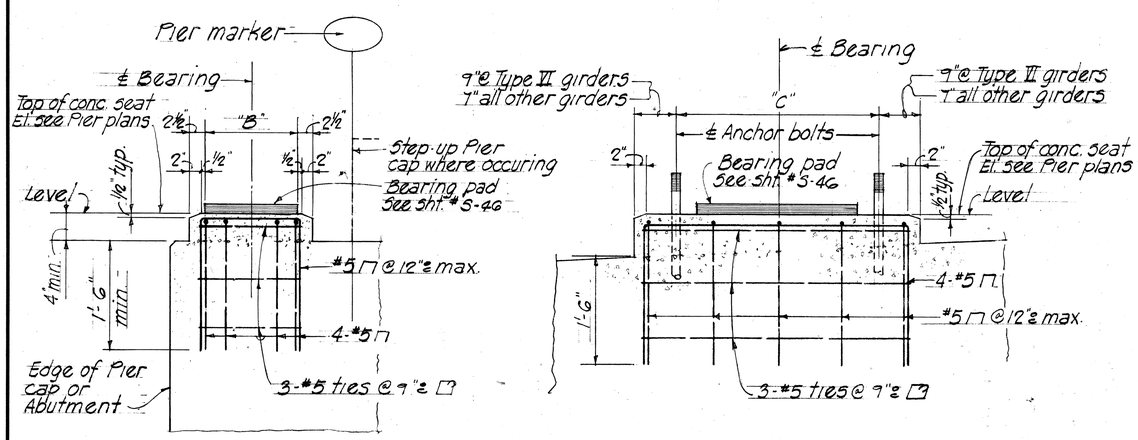

CROSS SECTION

LONGITUDINAL SECTION

TYPICAL CONCRETE SEAT DETAILS Not to scale

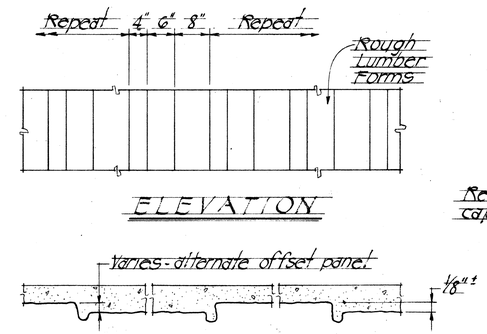

TYP. COLUMN ARCHITECTURAL FINISH DETAIL NOT TO SCALE

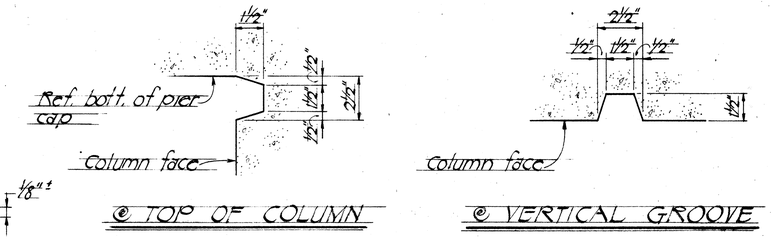

@ TOP OF COLUMN

@ VERTICAL GROOVE

TYP. COLUMN GROOVE DETAIL

Scale: 3" = 1'-0"

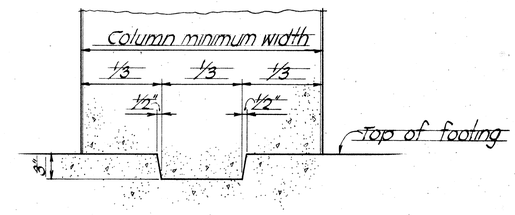

TYPICAL COLUMN KEY DETAIL

Not to scale

(Column key @ top of column similar)

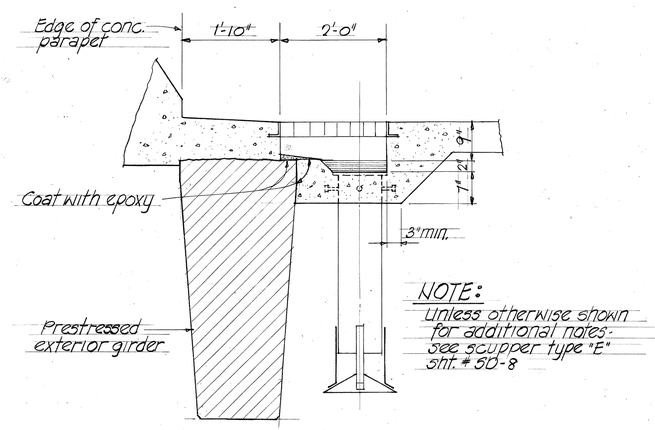

NOTE:
Unless otherwise shown for additional notes: see scupper type "E" sht. # 50-8

SCUPPER TYPE "R" DETAIL

Scale 3/4" = 1'-0"

HAROLD TAKASHI MIYAMOTO REGISTERED PROFESSIONAL ENGINEER No. 1514 HAWAII, U.S.A.

GEORGE K. NISHIKURA REGISTERED PROFESSIONAL ENGINEER No. 1388 HAWAII, U.S.A.

THIS WORK WAS PREPARED BY ME OR UNDER MY SUPERVISION

THIS WORK WAS PREPARED BY ME OR UNDER MY SUPERVISION

STATE OF HAWAII
DEPARTMENT OF TRANSPORTATION
HIGHWAYS DIVISION

NIMITZ CONNECTOR (E.B.)
RAMP "A" & RAMP "B"

TYPICAL CONCRETE SEAT AND COLUMN DETAILS
KEEHI INTERCHANGE

F.A.I. PROJ. NO. I-HI-1 (168) 17

Scale: As shown Date: JULY, 1981

SHEET No. S-36 OF 49 SHEETS

118

ORIGINAL PLAN | SURVEY PLOTTED BY | DRAWN BY | TRACED BY | DESIGNED BY | QUANTITIES BY | CHECKED BY | DATE | NOTE BOOK | No.

PRINTED ON NO. 1000H CLEARPRINT

FED. ROAD DIST. NO.	STATE	FED. AID PROJ. NO.	FISCAL YEAR	SHEET NO.	TOTAL SHEETS
HAWAII	HAW.	F-HI-I(168)17	1982	119	145

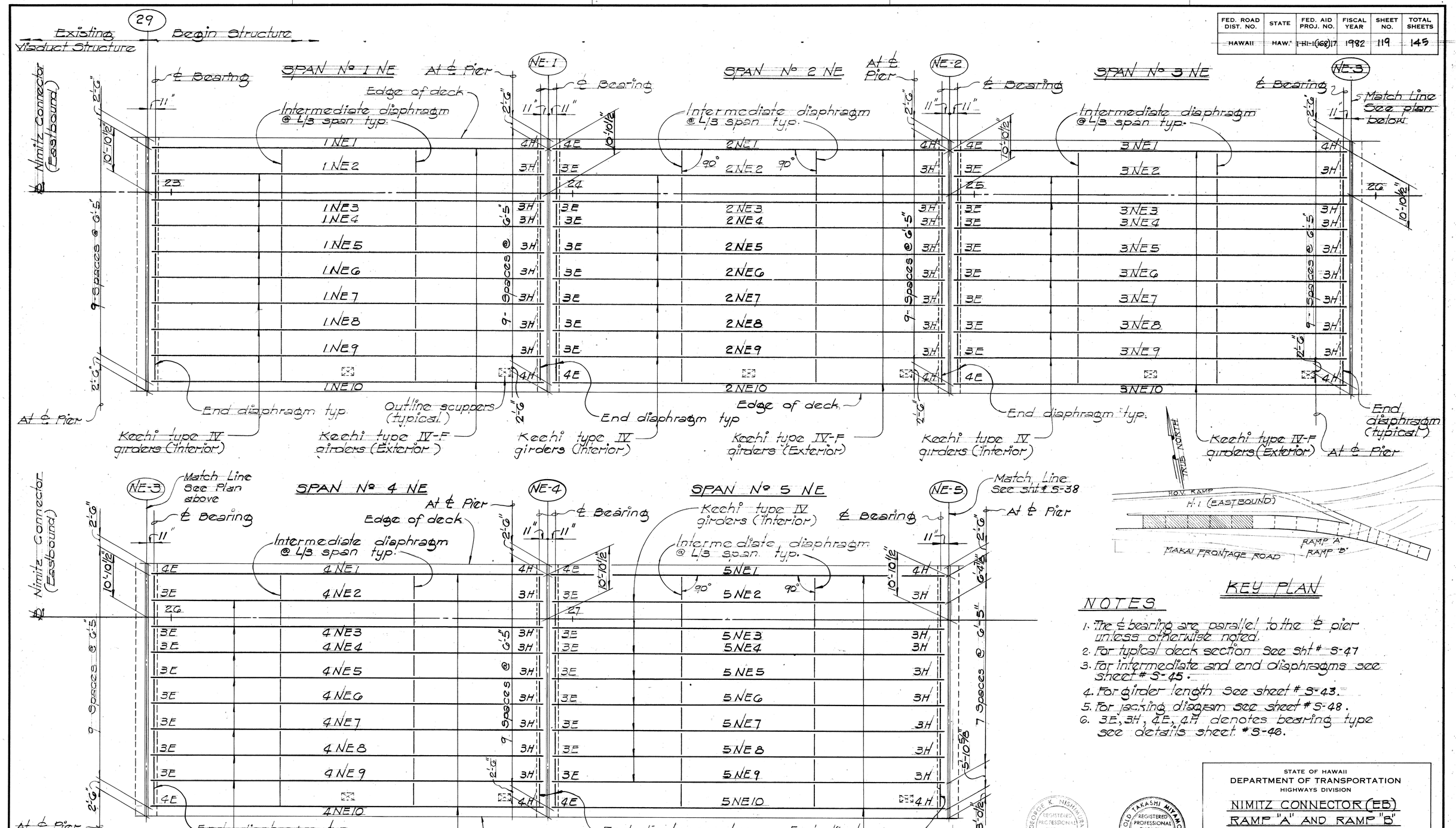

KEY PLAN

NOTES

1. The ℄ bearing are parallel to the ℄ pier unless otherwise noted.
2. For typical deck section See sht # S-47
3. For intermediate and end diaphragms see sheet # S-45.
4. For girder length See sheet # S-43.
5. For jacking diagram see sheet # S-48.
6. 3E, 3H, 4E, 4H denotes bearing type see details sheet # S-46.

DECK FRAMING PLAN

Scale: 3/32" = 1'-0"

ORIGINAL PLAN	SURVEY PLOTTED BY	DATE
	DRAWN BY	
	TRACED BY	
NOTE BOOK	DESIGNED BY	
	QUANTITIES BY	
No.	CHECKED BY	

GEORGE K. NISHIMURA REGISTERED PROFESSIONAL ENGINEER No. 1358 HAWAII, U.S.A.

THIS WORK WAS PREPARED BY ME OR UNDER MY SUPERVISION

HAROLD TAKASHI MIYAMOTO REGISTERED PROFESSIONAL ENGINEER No. 1514 HAWAII, U.S.A.

THIS WORK WAS PREPARED BY ME OR UNDER MY SUPERVISION

STATE OF HAWAII
DEPARTMENT OF TRANSPORTATION
HIGHWAYS DIVISION

NIMITZ CONNECTOR (EB)
RAMP "A" AND RAMP "B"
DECK FRAMING PLAN

KEEHI INTERCHANGE
FAI PROJ. NO. I-HI-I(168)17

SCALE: 3/32" = 1'-0" DATE: JULY, 1981

SHEET No. S-37 OF 49 SHEETS

PRINTED ON NO. 1000H CLEARPRINT

FED. ROAD DIST. NO.	STATE	FED. AID PROJ. NO.	FISCAL YEAR	SHEET NO.	TOTAL SHEETS
HAWAII	HAW.	I-H1-1(168)17	1982	120	145

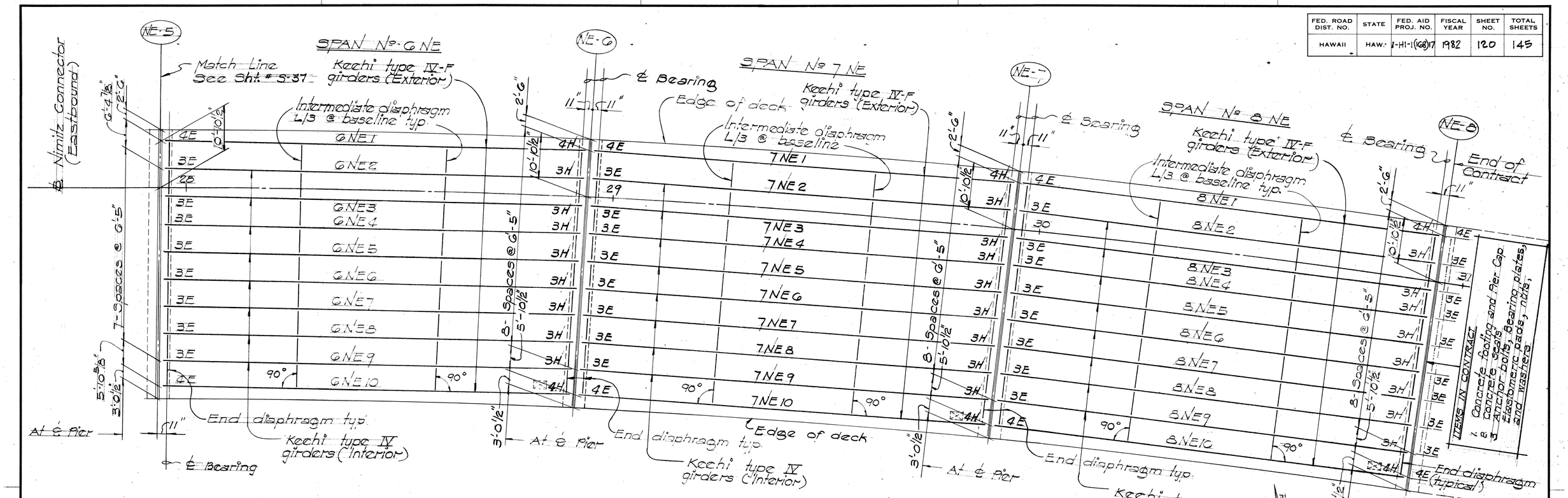

DECK FRAMING PLAN

Scale: 3/32" = 1'-0"

KEY PLAN

NOTES

1. 3E, 3H, 4E, 4H denotes bearing type, see detail sheet # S-46.
2. The ℄ bearing are parallel to the ℄ pier unless otherwise noted.
3. For typical deck sections see sht. # S-47.
4. For intermediate and end diaphragms see sheet # S-45.
5. For girder length see sheet # S-43.
6. For jacking diagram see sht. # S-48.

GEORGE K. NISHIMURA REGISTERED PROFESSIONAL ENGINEER No. 1398 HAWAII, U.S.A.

THIS WORK WAS PREPARED BY ME OR UNDER MY SUPERVISION

HAROLD TAKASHI MIKAMI REGISTERED PROFESSIONAL ENGINEER No. 1514 HAWAII, U.S.A.

THIS WORK WAS PREPARED BY ME OR UNDER MY SUPERVISION

STATE OF HAWAII
DEPARTMENT OF TRANSPORTATION
HIGHWAYS DIVISION

NIMITZ CONNECTOR (EB), RAMP "A" AND RAMP "B"

DECK FRAMING PLAN

KEEHI INTERCHANGE
FAI PROJ. NO. I-H1-1(168)17

SCALE: 3/32" = 1'-0" DATE: JULY, 1981

SHEET No. S-38 OF 49 SHEETS

ORIGINAL PLAN | SURVEY PLOTTED BY | DRAWN BY | TRACED BY | DESIGNED BY | QUANTITIES BY | CHECKED BY | DATE
NOTE BOOK | NO.

PRINTED ON NO. 1000H CLEARPRINT

FED. ROAD DIST. NO.	STATE	FED. AID PROJ. NO.	FISCAL YEAR	SHEET NO.	TOTAL SHEETS
HAWAII	HAW.	I-HI-1(168)17	1982	121	145

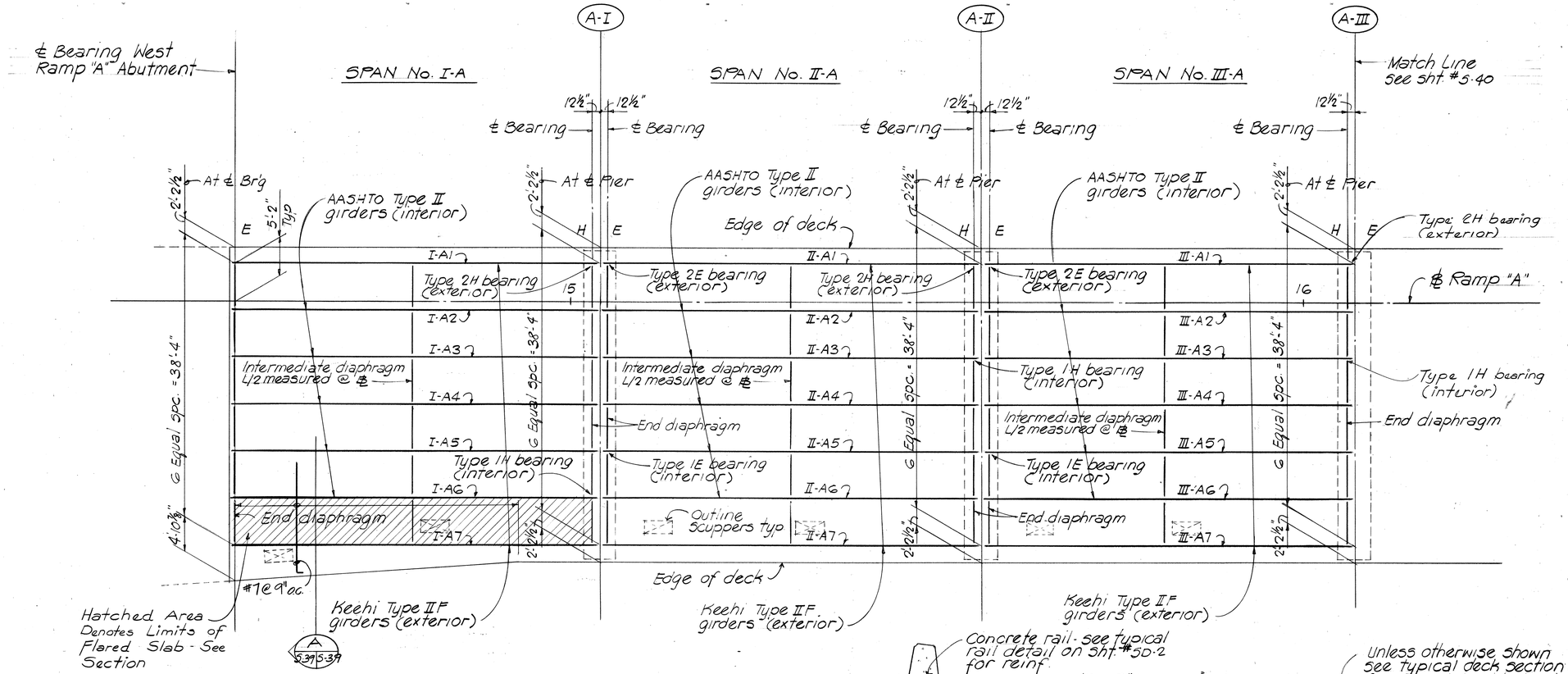

DECK FRAMING PLAN

Scale 1/8" = 1'-0"

NOTE:

1. The ℄ bearing are parallel to the ℄ Pier unless otherwise noted.
2. For typical deck section - see sht. #5-48
3. For intermediate and end diaphragms - See sht. #5-45
4. For girder length - see shts. #5-43
5. For jacking diagram - see sht. #5-48

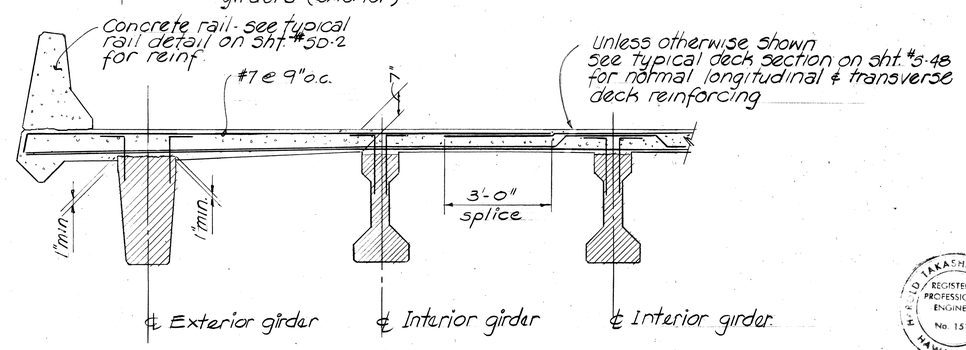

SECTION A 5-39 5-39

Scale: 1/2" = 1'-0"

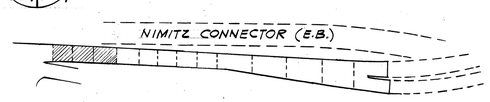

KEY PLAN

HIROJI TAKASHI MIYAMOTO
REGISTERED PROFESSIONAL ENGINEER
No. 1514
HAWAII, U.S.A.

THIS WORK WAS PREPARED BY ME OR UNDER MY SUPERVISION

GEORGE K. NISHIJIMA
REGISTERED PROFESSIONAL ENGINEER
No. 1388
HAWAII, U.S.A.

THIS WORK WAS PREPARED BY ME OR UNDER MY SUPERVISION

STATE OF HAWAII
DEPARTMENT OF TRANSPORTATION
LAND TRANSPORTATION FACILITIES DIVISION

NIMITZ CONNECTOR (E.B.)
RAMP "A" & RAMP "B"

DECK FRAMING PLAN
KEEHI INTERCHANGE
F.A.I. PROJ. No. I-HI-1 (168)17

Scale: 1/8" = 1'-0" Date: JULY, 1981

SHEET No. 5-39 OF 49 SHEETS

ORIGINAL PLAN	SURVEY PLOTTED BY	DATE
	TRACED BY	"
	DESIGNED BY	"
NOTE BOOK	QUANTITIES BY	"
No.	CHECKED BY	"

FED. ROAD DIST. NO.	STATE	FED. AID PROJ. NO.	FISCAL YEAR	SHEET NO.	TOTAL SHEETS
HAWAII	HAW.	I-H1-1(168)17	1982	122	143

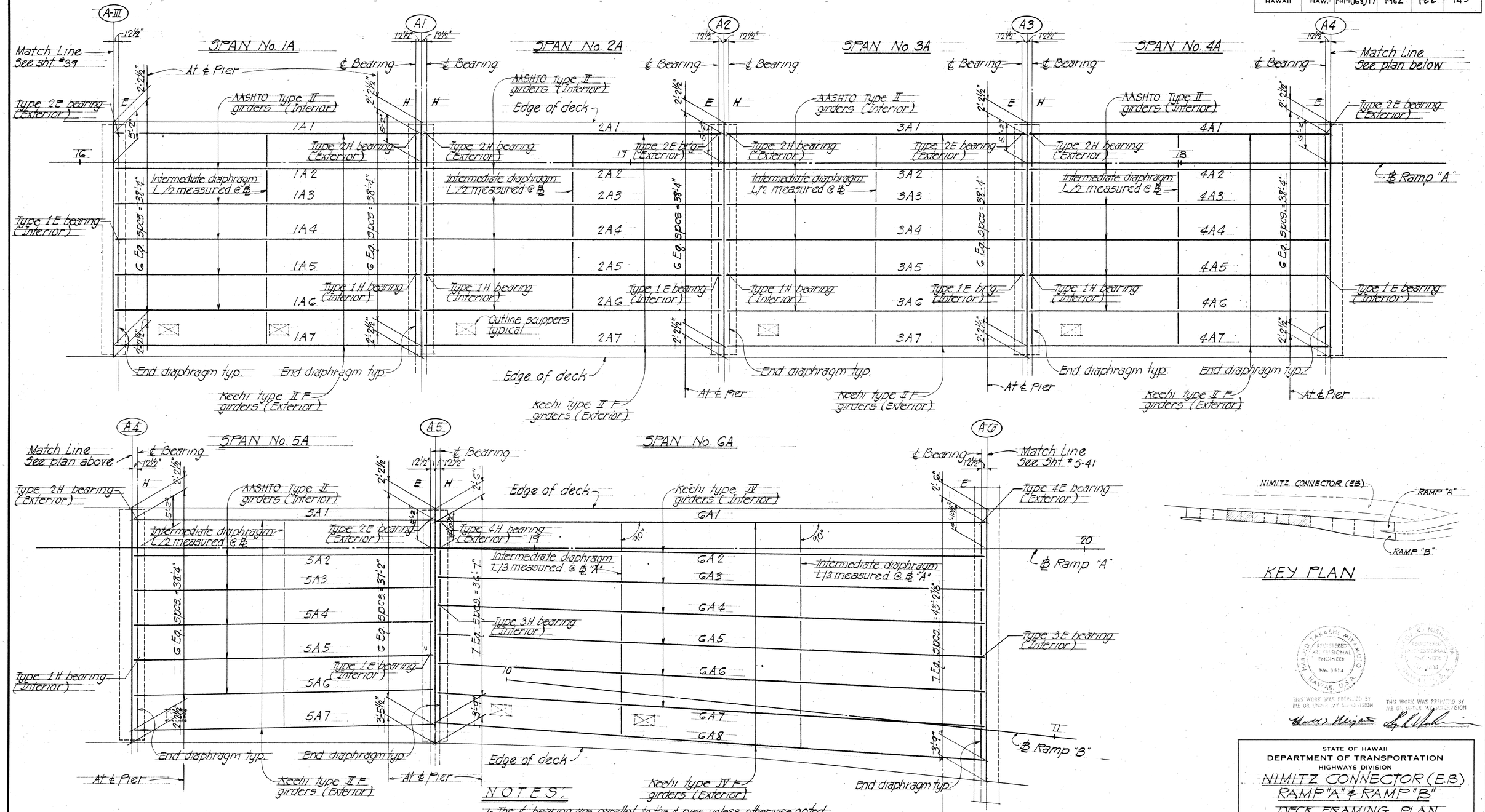

DECK FRAMING PLAN

Scale 1/8" = 1'-0"

KEY PLAN

NOTES

1. The ℄ bearing are parallel to the ℄ pier unless otherwise noted.
2. For typical deck sections - see sheet #S-48
3. For intermediate and end diaphragms - see sht. #S-45
4. For girder length - see sheet #S-43
5. For jacking diagram - see sheet #S-48

THIS WORK WAS PREPARED BY ME OR UNDER MY SUPERVISION

STATE OF HAWAII
DEPARTMENT OF TRANSPORTATION
HIGHWAYS DIVISION

NIMITZ CONNECTOR (E.B.)
RAMP "A" & RAMP "B"
DECK FRAMING PLAN
KEEHI INTERCHANGE

F.A.I. PROJ. NO. I-H1-1(168)17

Scale: As shown Date: JULY, 1981

SHEET No. S-40 OF 49 SHEETS

ORIGINAL PLAN | SURVEY PLOTTED BY | DRAWN BY | TRACED BY | DESIGNED BY | QUANTITIES BY | CHECKED BY | DATE | NOTE BOOK | No.

PRINTED ON NO. 1000H CLEARPRINT

FED. ROAD DIST. NO.	STATE	FED. AID PROJ. NO.	FISCAL YEAR	SHEET NO.	TOTAL SHEETS
HAWAII	HAW.	I-HI-1(168)17	1982	123	143

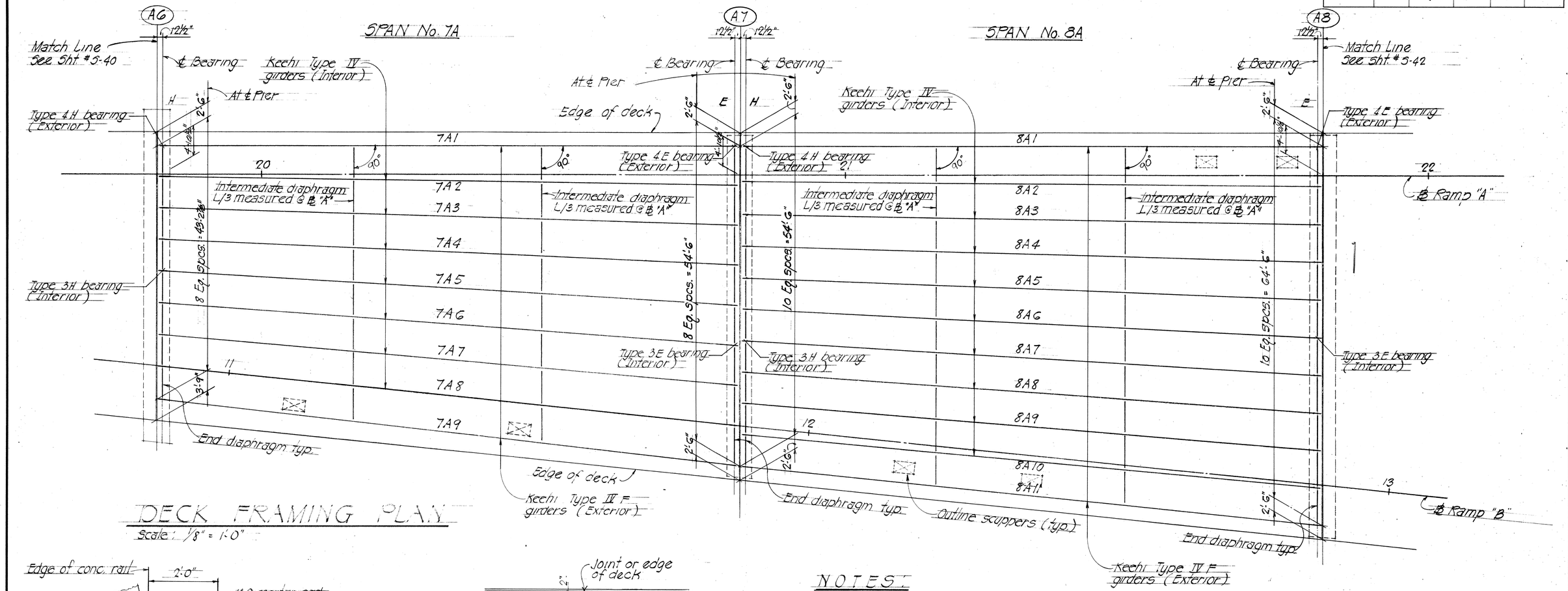

DECK FRAMING PLAN

Scale: 1/8" = 1'-0"

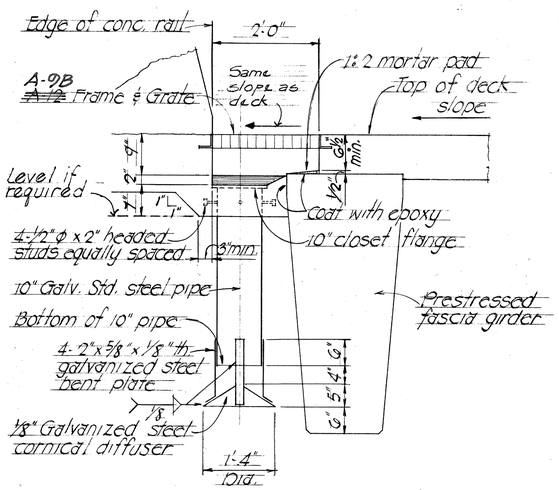

SCUPPER TYPE "F"

Scale: 3/4" = 1'-0"

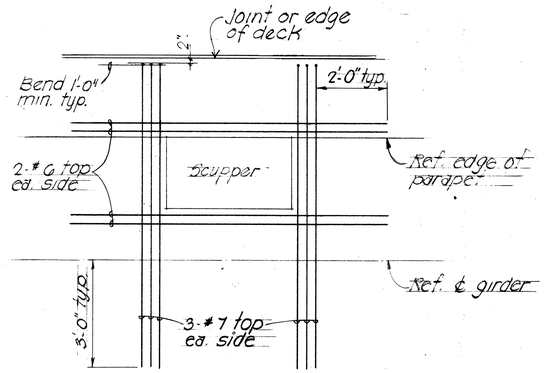

ADDED REINFORCING AT SCUPPER TYPE "F"

Scale: 1/2" = 1'-0"

NOTES

1. The ℄ bearing are parallel to the ℄ pier unless otherwise noted.
2. For typical deck sections - see sht. #S-48
3. For intermediate and end diaphragms - see sheet #S-45
4. For girder length - see sheet #S-43.

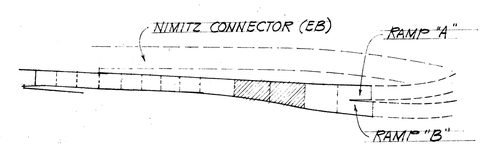

KEY PLAN

HAROLD TAKASHI MIYA REGISTERED PROFESSIONAL ENGINEER No. 1514 HAWAII, U.S.A.

THIS WORK WAS PREPARED BY ME OR UNDER MY SUPERVISION

FLORENCE K. NISHIMURA REGISTERED PROFESSIONAL ENGINEER No. 1388 HAWAII, U.S.A.

THIS WORK WAS PREPARED BY ME OR UNDER MY SUPERVISION

STATE OF HAWAII
DEPARTMENT OF TRANSPORTATION
HIGHWAYS DIVISION

NIMITZ CONNECTOR (E.B.)
RAMP "A" & RAMP "B"
DECK FRAMING PLAN
KEEHI INTERCHANGE

F.A.I. PROJ. NO. I-HI-1(168)17

Scale: As shown — Date: JULY, 1981

SHEET No. S-41 OF 49 SHEETS

123

ORIGINAL PLAN	SURVEY PLOTTED BY	DATE
	DRAWN BY	
	TRACED BY	
NOTE BOOK	DESIGNED BY	
	QUANTITIES BY	
No.	CHECKED BY	

PRINTED ON NO. 1000H CLEARPRINT

FED. ROAD DIST. NO.	STATE	FED. AID PROJ. NO.	FISCAL YEAR	SHEET NO.	TOTAL SHEETS
HAWAII	HAW.	I-HI-1(168)17	1982	124	143

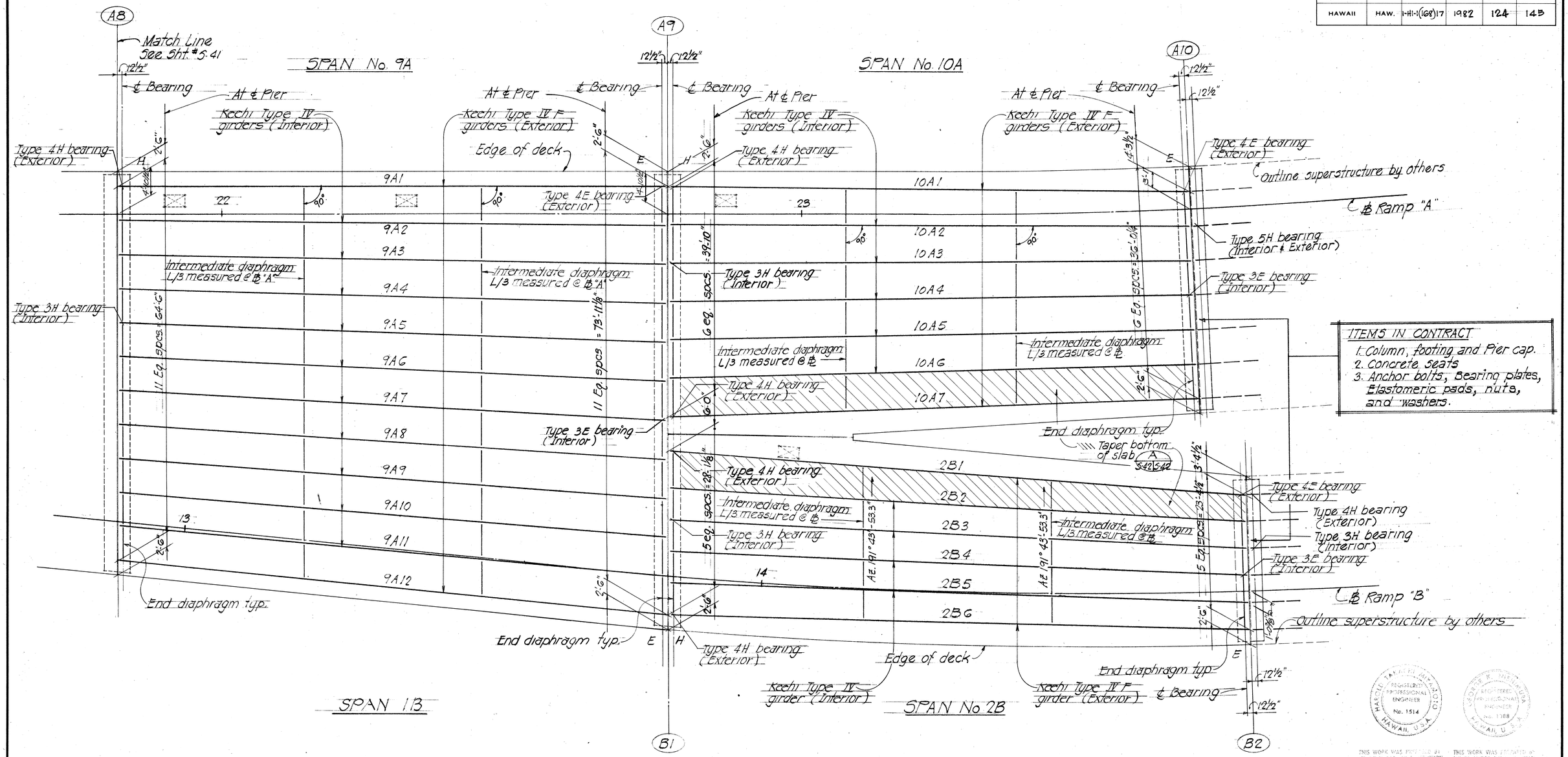

DECK FRAMING PLAN

Scale 1/8" = 1'-0"

NOTES:

1. The ℄ bearing are parallel to the ℄ pier unless otherwise noted.
2. For typical deck sections - see sht. # S-48
3. For intermediate and end diaphragms - see sheet # S-45
4. For girder length - see sheet # S-43

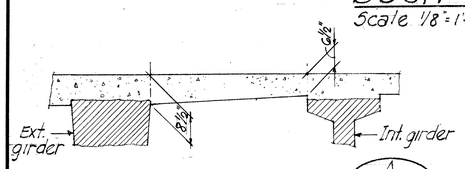

TYP. SECT. @ TAPERED SLAB (A / S-42 S-42)

Scale 1/2" = 1'-0"

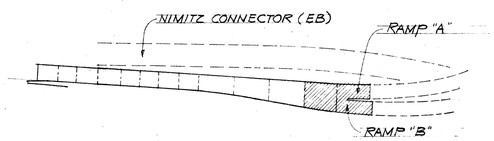

KEY PLAN

STATE OF HAWAII
DEPARTMENT OF TRANSPORTATION
HIGHWAYS DIVISION

NIMITZ CONNECTOR (E.B.)
RAMP "A" & RAMP "B"
DECK FRAMING PLAN
KEEHI INTERCHANGE

F.A.I. PROJ. NO. I-HI-1(168)17

Scale: As shown Date: JULY, 1981

SHEET No. S-42 OF 49 SHEETS

124

ORIGINAL PLAN	SURVEY PLOTTED BY	DATE
	DRAWN BY	
	TRACED BY	
NOTE BOOK	DESIGNED BY	
	QUANTITIES BY	
No.	CHECKED BY	

PRINTED ON NO. 1000H CLEARPRINT

BEAM TYPE SCHEDULE

FED. ROAD DIST. NO.	STATE	FED. AID PROJ. NO.	FISCAL YEAR	SHEET NO.	TOTAL SHEETS
HAWAII	HAW.	HH-1(68)17	1982	125	145

Beam mark	Bm. length ℄ to ℄ brg.	t'	t²	Plate taper	Beam type
1A 1	52.92	1 1/8"	1 1/8"	1/4:12	IIF-A
2					II-D
3					
4					
5					
6					II-D
1A 7	52.92	1 1/8"	1 1/8"	1/4:12	IIF-A
2A 1	52.92	1 1/8"	1 1/8"	5/16:12	IIF-A
2					II-D
3					
4					
5					
6					II-D
2A 7	52.92	1 1/8"	1 1/8"	5/16:12	IIF-A
3A 1	52.92	1 1/8"	1 1/8"	3/8:12	IIF-A
2					II-D
3					
4					
5					
6					II-D
3A 7	52.92	1 1/8"	1 1/8"	3/8:12	IIF-A
4A 1	52.92	1 3/16"	1 3/16"	7/16:12	IIF-A
2					II-D
3					
4					
5					
6					II-D
4A 7	52.92	1 3/16"	1 3/16"	7/16:12	IIF-A
5A 1	52.92	1 3/16"	1 3/16	1/2:12	IIF-A
2					II-D
3					
4					
5	52.92				
6	52.93				II-D
5A 7	52.93	1 3/16"	1 3/16"	1/2:12	IIF-A
6A 1	97.92	1 5/16"	1 5/16"	1/2:12	IIIF-A
2	97.92	1 3/16"	1 3/16"		IV-C
3	97.93				
4	97.96				
5	97.99				
6	98.03				
7	98.08	1 3/16"	1 3/16"		IV-C
6A 8	98.13	1 5/16"	1 5/16"	1/2:12	IIIF-A
7A 1	97.92	1 5/16"	1 5/16"	1/2:12	IIIF-A
2	97.93	1 1/4"	1 1/4"		IV-C
3	97.96				
4	98.01				
5	98.07				
6	98.16				
7	98.27				
7A 8	98.39	1 1/4"	1 1/4"	1/2:12	IV-C

Beam mark	Bm. length ℄ to ℄ brg.	t'	t²	Plate taper	Beam type
7A 9	98.53	1 5/16"	1 5/16"	1/2:12	IIIF-A
8A 1	97.92	1 1/4"	1 1/4"	7/16:12	IIIF-A
2	97.92	1 3/16"	1 3/16"	1/2:12	IV-C
3	97.94				
4	97.96				
5	98.00				
6	98.04	1 3/16"	1 3/16"	1/2:12	
7	98.09	1 1/4"	1 1/4"	9/16:12	
8	98.16				
9	98.23				
10	98.31	1 1/4"	1 1/4"	9/16:12	IV-C
8A 11	98.41	1 3/8"	1 3/8"	5/8:12	IIIF-A
9A 1	92.92	1 1/4"	1 1/4"	7/16:12	IIIF-B
2	92.92	1 3/16"	1 3/16"	1/2:12	IV-C
3	92.93				
4	92.95				
5	92.98	1 1/4"	1 1/4"	9/16:12	
6	93.01				
7	93.05				
8	93.10				
9	93.16				
10	93.22			5/8:12	
11	93.29			5/8:12	IV-C
9A 12	93.37	1 3/8"	1 3/8"	11/16:12	IIIF-B
10A 1	87.73	1 5/16"	1 5/16"	1/2:12	IIIF-B
2	88.05	1 1/4"	1 1/4"		IV-C
3	88.37				
4	88.69				
5	89.02				
6	89.35			9/16:12	IV-C
10A 7	89.69	1 5/16"	1 5/16"	9/16:12	IIIF-A
2B 1	97.84	1 1/4"	1 1/4"	1/2:12	IIIF-D
2	97.88	1 3/16"	1 3/16"		IV-C
3	97.93				
4	97.98				
5	98.04				IV-C
2B 6	98.12	1 1/4"	1 1/4"	1/2:12	IIIF-A
1NE 1	98.26		1"	1/16:12	IIIF-A
2					IV-C
3					
4					
5					
6					
7					
8					
9					IV-C
1NE 10	98.26		1"	1/16:12	IIIF-A
2NE 1	98.26	1 1/16"	1 1/16"	1/8:12	IIIF-A
2					IV-C
3					IV-C
2NE 4	98.26	1 1/16"	1 1/16"	1/8:12	IV-C

Beam mark	Bm. length ℄ to ℄ brg.	t'	t²	Plate taper	Beam type
2NE 5	98.26	1 1/16"	1 1/16"	1/8:12	IV-C
6					
7					
8					
9					IV-C
2NE 10	98.26	1 1/16"	1 1/16"	1/8:12	IIIF-A
3NE 1	98.26	1 1/8"	1 1/8"	3/16:12	IIIF-A
2					IV-C
3					
4					
5					
6					
7					
8					
9					IV-C
3NE 10	98.26	1 1/8"	1 1/8"	3/16:12	IIIF-A
4NE 1	98.26	1 1/8"	1 1/8"	3/16:12	IIIF-A
2				3/16:12	IV-C
3				1/4:12	
4					
5					
6					
7					
8					
9					IV-C
4NE 10	98.26	1 1/8"	1 1/8"	1/4:12	IIIF-A
5NE 1	98.20	1 3/16"	1 3/16"	1/4:12	IIIF-A
2	98.18			1/4:12	IV-C
3	98.16			5/16:12	
4	98.14				
5	98.12				
6	98.09				
7	98.07			5/16:12	
8	98.05			3/8:12	
9	98.03			3/8:12	IV-C
5NE 10	98.01	1 3/16"	1 3/16"	3/8:12	IIIF-A
6NE 1	98.64	1 1/4"	1 1/4"	5/16:12	IIIF-A
2	98.36			5/16:12	IV-C
3	98.07			5/16:12	
4	97.79			3/8:12	
5	97.50				
6	97.22				
7	96.93			3/8:12	
8	96.65			7/16:12	
9	96.36			7/16:12	IV-C
6NE 10	96.10	1 1/4"	1 1/4"	7/16:12	IIIF-A
7NE 1	98.64	1 1/4"	1 1/4"	3/8:12	IIIF-A
2	98.36			3/8:12	IV-C
3	98.07			5/16:12	
4	97.79			3/8:12	
5	97.50				
6	97.22				
7	96.93				
8	96.65				
9	96.36				IV-C
8NE 10	96.10	1 1/4"	1 1/4"	3/8:12	IIIF-A
I-A1	48.76		1 1/8"	1/8:12	IIF-A
I-A2				1/8:12	~~II-A~~ II-D
I-A3				1/8:12	II-D
I-A4				1/16:12	II-D
I-A5					II-D
I-A6					~~II-A~~ II-D
I-A7	48.76		1 1/8"	1/16:12	IIF-A
~~III~~-A1	48.92	1 1/8"	1 1/8"	1/8:12	IIF-A
~~III~~-A2					~~II-A~~ II-D
~~III~~-A3					II-D
~~III~~-A4					II-D
~~III~~-A5					II-D
~~III~~-A6					II-A II-D
~~III~~-A7	48.92	1 1/8"	1 1/8"	1/8:12	IIF-A
~~III~~-A1	48.92	1 1/8"	1 1/8"	3/16:12	IIF-A
~~III~~-A2					~~II-A~~ II-D
~~III~~-A3					II-D
~~III~~-A4					II-D
~~III~~-A5					II-D
~~III~~-A6					~~II-A~~ II-D
~~III~~-A7	48.92	1 1/8"	1 1/8"	3/16:12	IIF-A

Beam mark	Bm. length ℄ to ℄ brg.	t'	t²	Plate taper	Beam type
11A 1		1 5/16"		1/2":12	
2					
3					
4					
5					
6					
11A 7		1 5/16"		1/2":12	
3B 1		1 3/16"		5/16:12	
2		1 1/8"			
3		1 1/8"			
4		1 1/8"			
3B 5		1 3/16"		5/16:12	
9NE 1		1 3/16"		1/2:12	
2		1 3/16"		7/16:12	
3				3/8:12	
4					
5					
6					
7					
8					
9		1 3/16"			
9NE 10		1 5/16"		3/8:12	

NOTES:

1. t' is the bearing plate thickness (inches) at down station end of the beam.
2. t² is the plate thickness (inches) at up station end of beam.
3. Beam length given is horizontal distance between ℄ bearing.
4. For placement of tapered plate: see top of conc. seat elevations on pier details.

SURVEY PLOTTED BY
DRAWN BY
TRACED BY
DESIGNED BY
QUANTITIES BY
CHECKED BY
DATE
ORIGINAL PLAN
NOTE BOOK
No.

GEORGE K. NISHIMURA
REGISTERED PROFESSIONAL ENGINEER
No. 1388
HAWAII, U.S.A.

THIS WORK WAS PREPARED BY ME OR UNDER MY SUPERVISION

HAROLD TAKASHI MIYAMOTO
REGISTERED PROFESSIONAL ENGINEER
No. 1514
HAWAII, U.S.A.

THIS WORK WAS PREPARED BY ME OR UNDER MY SUPERVISION

STATE OF HAWAII
DEPARTMENT OF TRANSPORTATION
HIGHWAYS DIVISION

NIMITZ CONNECTOR (E.B)
RAMP "A" & RAMP "B"

BEAM TYPE SCHEDULE

KEEHI INTERCHANGE

F.A.I. PROJ. NO. I-HI-I(68)17

Scale: As shown Date: JULY, 1981

SHEET No. S-43 OF 49 SHEETS

FED. ROAD DIST. NO.	STATE	FED. AID PROJ. NO.	FISCAL YEAR	SHEET NO.	TOTAL SHEETS
HAWAII	HAW.	I-HI-1(168)17	1982	126	145

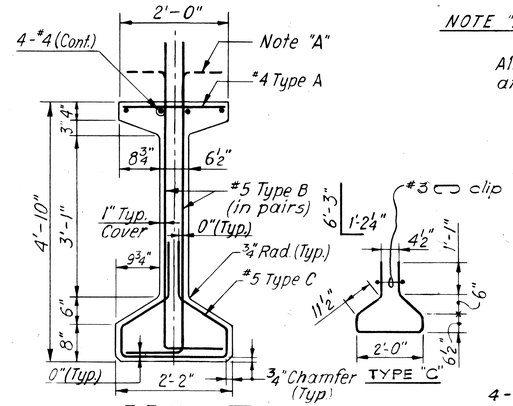

KEEHI IV

NOTE "A": Bend bars in field 1½" below top of deck. All reinforcing dimensions are out to out.

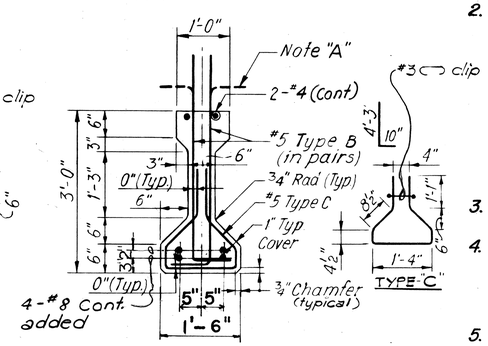

AASHTO TYPE II

TYPICAL BEAM SECTIONS

Scale ¾" = 1'-0"

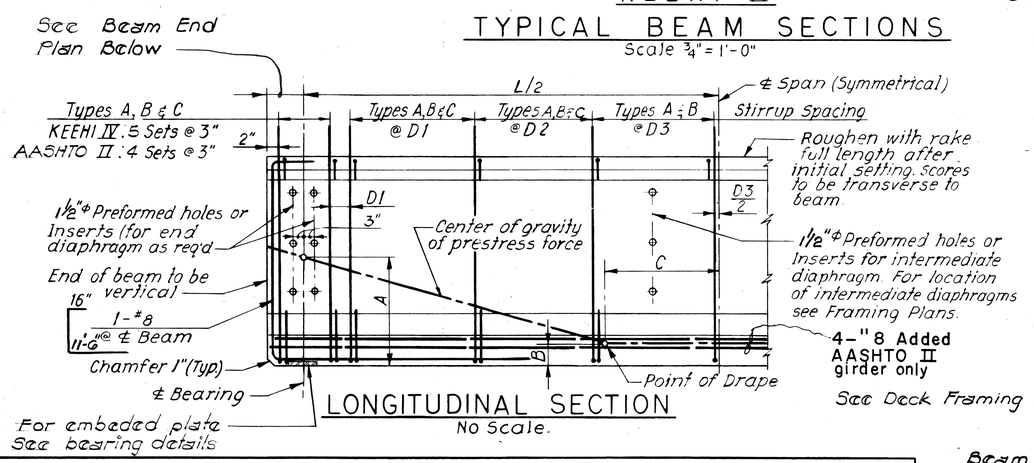

LONGITUDINAL SECTION

No Scale.

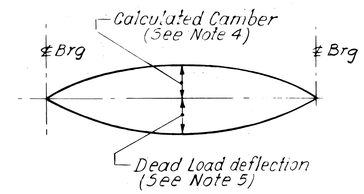

CAMBER DIAGRAM

NOTES FOR PRESTRESSED BEAMS:

PRETENSIONING

1. Concrete shall have a minimum 28 day compressive strength of 6,000 psi.
2. A. Pretensioned strands in Keehi Beams Type IV, & IV-F shall be 7 wire 1/2"Ø stress-relieved steel strands (area = 0.153 in.^{2}) with an ultimate strength of 270 ksi. For properties See State Standard Specifications.
   Initial strand stress (before any losses): 199 ksi.; Initial loss = 20,000 psi.
   Total loss due to creep, shrinkage, elastic shortening and relaxation of steel = 45,000 psi.
   B. Pretensioned strands in AASHTO Beam Type II and Keehi Beam Type II-F shall be 7 wire 7/16"Ø stress-relieved steel strands (area = 0.115 in.^{2}) with an ultimate strength of 270 ksi. For properties see State Standard Specifications.
   Initial strand stress (before any losses): 196 ksi.; Initial loss = 20,000 psi.
   Total loss due to creep, shrinkage, elastic shortening and relaxation of steel = 45,000 psi.
3. Non-prestressed reinforcing steel shall be Grade 40 unless otherwise noted. For properties see State Standard Specifications.
4. The calculated camber includes the effect of the initial prestress force and the weight of the beam after removal from bed. Negative values shown for calculated camber indicate a net upward deflection. Calculated camber values shown do not account for any camber growth of the beam. The actual camber shall not exceed the calculated camber shown on the plans by more than 100 % at time of installation.
5. The dead load deflection includes the combined effects of the weight of slab, haunch and diaphragm.
6. Strand pattern shall be symmetrical about the longitudinal ℄ of the beam.
7. Strand release sequence shall not induce any lateral deflection of the beam.
8. Contractor shall submit his proposed strand pattern and releasing sequence to the Engineer for approval.
9. During curing care shall be taken to avoid any lateral deflection of the beam due to improper orientation.
10. Lifting devices shall be placed as close as possible to the center line of bearings of the beam. Details and locations of lifting devices shall be submitted to the Engineer for approval. Such approval does not relieve the Contractor of his responsibility if the beam is damaged due to failure of the lifting device.
11. See Framing Plans for locations of diaphragms and beam mark numbers. For beam types and lengths see beam type schedule. Lengths shown do not include effect of elastic shortening.
12. In lieu of the 7 wire 1/2" dia. stress-relieved steel strands (area 0.153 in.^{2}) with an ultimate strength of 270 ksi, the Contractor at his option may use 7 wire 7/16" dia. stress-relieved steel strands (area 0.115 in.^{2}) with an ultimate strength of 270 ksi. For properties of 7/16" dia. strand see special provision. However the working force and its center of gravity as stated, shall not be revised unless approved by the Engineer.

BEAM SCHEDULE

BEAM TYPE	INITIAL PRESTRESS FORCE (KIPS) *	WORKING FORCE (KIPS)	CALCULATED CAMBER SEE NOTE 4	DEAD LOAD DEFLECTION SEE NOTE 5	LOCATION OF CENTER OF GRAVITY OF PRESTRESS FORCE			STIRRUPS			REQUIRED MIN. ULT. CONC. STRENGTH BEFORE RELEASE OF STRANDS (P.S.I.)	REMARKS
					DIST A	DIST B	DIST. TO PT. OF DRAPE C	NO. OF STIRRUPS @ SPACING D1	NO. OF STIRRUPS @ SPACING D2	SPACING D3		
IV-C	1158	896	-1 5/16"	1"	1'-6"	4½"	10'-0"	12 @ 9"	18 @ 12"	18"	4500	
II-D	676	521	-5/8"	½"	1'-3"	7⅛"	5'-6"	30 @ 4"	22 @ 6"	10"	4500	

* Before any losses

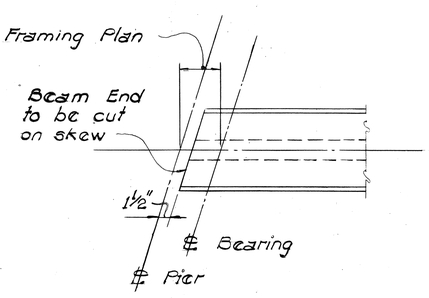

BEAM END PLAN

NOTE

Bundling of prestressing reinforcement is permitted. Refer to Sht. T-18 Bundling of Prestressing Reinforcement Detail.

PRESTRESSED CONCRETE GIRDERS WILL BE FURNISHED BY OTHERS

GEORGE K. NISHIMURA REGISTERED PROFESSIONAL ENGINEER No. 1388 HAWAII, U.S.A.

THIS WORK WAS PREPARED BY ME OR UNDER MY SUPERVISION

HAROLD LAU REGISTERED PROFESSIONAL ENGINEER No. 1314 HAWAII, U.S.A.

THIS WORK WAS PREPARED BY ME OR UNDER MY SUPERVISION

STATE OF HAWAII
DEPARTMENT OF TRANSPORTATION
HIGHWAYS DIVISION

NIMITZ CONNECTOR (EB)
RAMP "A" AND RAMP "B"

PRESTRESS BEAM DETAILS
SHEET 1 OF

KEEHI INTERCHANGE
F.A.I. PROJECT NO. I-HI-1(168)17

SCALE: DATE: JULY, 1981

SHEET No. S-44 OF 49 SHEETS

ORIGINAL PLAN | SURVEY PLOTTED BY | DRAWN BY | TRACED BY | DESIGNED BY | QUANTITIES BY | CHECKED BY | NOTE BOOK | No. | DATE

FED. ROAD DIST. NO.	STATE	FED. AID PROJ. NO.	FISCAL YEAR	SHEET NO.	TOTAL SHEETS
HAWAII	HAW.	F-HI-1(108)17	1982	127	145

Date	Revision
10-15-82	Revised threaded inserts into exterior girder.

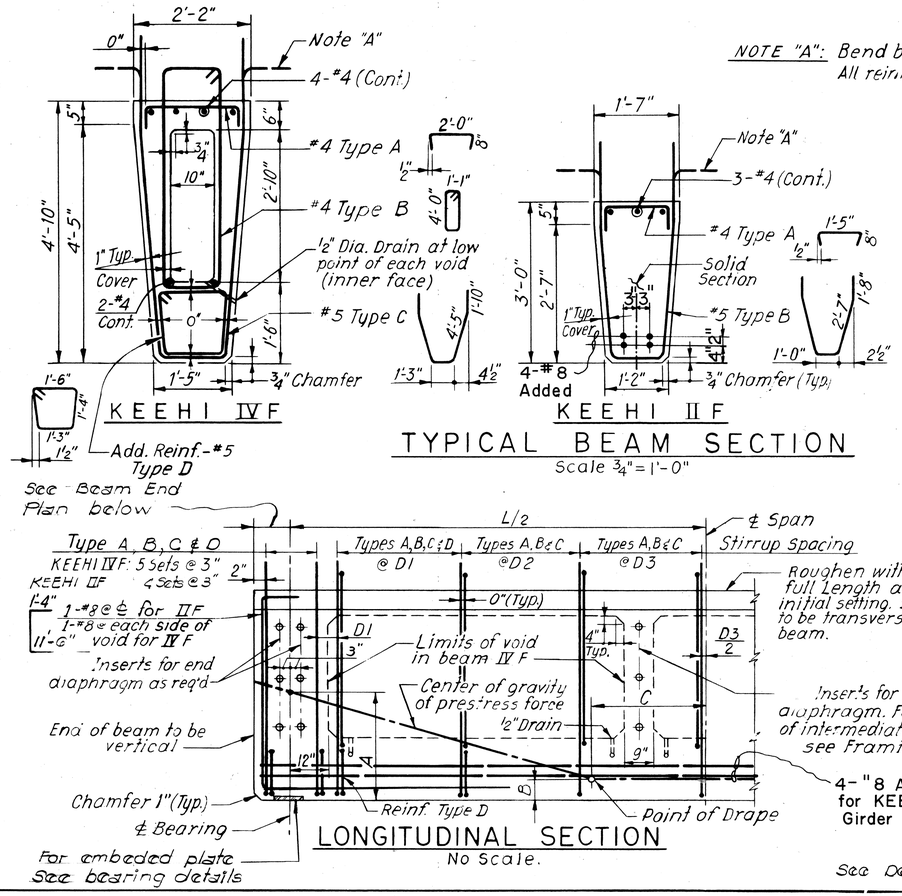

NOTE "A": Bend bars in field 1 1/2" below top of deck. All reinforcing dimensions are out to out.

TYPICAL BEAM SECTION

Scale 3/4" = 1'-0"

PRESTRESSED CONCRETE GIRDERS WILL BE FURNISHED BY OTHERS

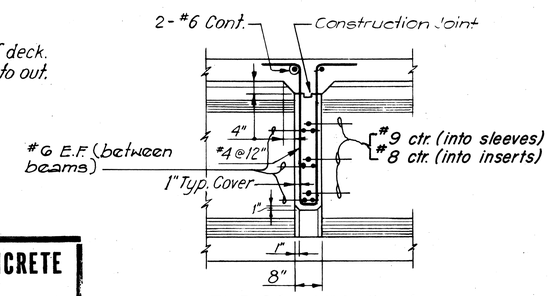

TYPICAL SECTION

INTERMEDIATE DIAPHRAGMS

Scale 1/2" = 1'-0"

NOTE:

Diaphram bars through sleeve or threaded into inserts shall be paid under Reinforcing steel in bridges.

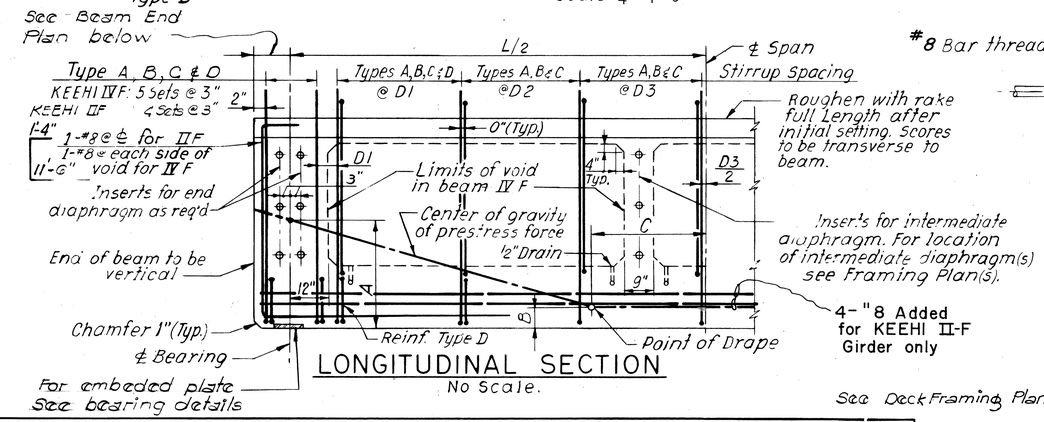

LONGITUDINAL SECTION

No Scale.

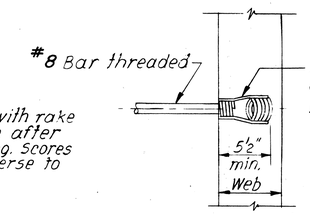

DETAIL I

Scale 1 1/2" = 1'-0"

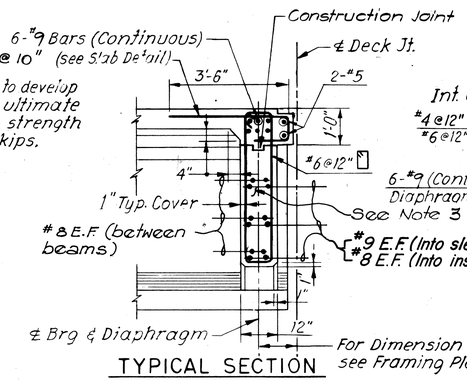

TYPICAL SECTION

END DIAPHRAGMS

Scale 1/2" = 1'-0"

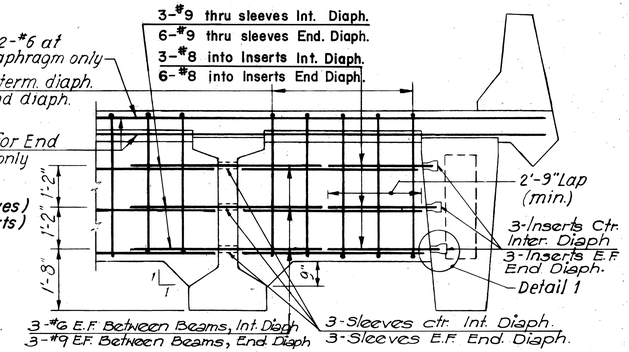

BEAMS KEEHI IV & IVF

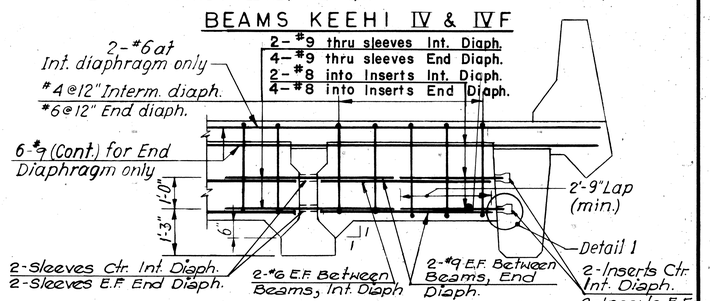

BEAMS AASHTO II & KEEHI IIF

TYPICAL INTERMEDIATE AND END DIAPHRAGMS

Scale: 1/2" = 1'-0"

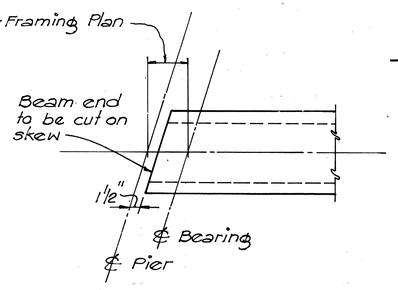

BEAM END PLAN

BEAM SCHEDULE

BEAM TYPE	INITIAL* PRESTRESS FORCE (KIPS)	WORKING FORCE (KIPS)	CALCULATED CAMBER SEE NOTE 4	DEAD LOAD DEFLECTION SEE NOTE 5	LOCATION OF CENTER OF GRAVITY OF PRESTRESS FORCE			STIRRUPS			REQUIRED MIN. ULT. CONC. STRENGTH BEFORE RELEASE OF STRANDS (P.S.I.)	REMARKS
					DIST. A	DIST. B	DIST. TO PT. OF DRAPE C	NO. OF STIRRUPS @ SPACING D1	NO. OF STIRRUPS @ SPACING D2	SPACING D3		
IVF-A	1402	1085	-1 3/16"	7/8"	1'-9"	7 3/4"	10'-0"	9 @ 15"	10 @ 18"	18"	4600	G-10A7 Release @ 4800
IVF-B	1158	896	-1"	5/8"	1'-10"	7"	9'-6"	9 @ 15"	10 @ 18"	18"	4500	
IVF-D	1524	1179	-1 5/8"	7/8"	1'-8"	8 1/4"	10'-0"	15 @ 12"	12 @ 15"	18"	5000	
IIF-A	792	613	-5/8"	1/4"	1'-4"	9 1/4"	5'-6"	24 @ 6"	12 @ 10"	15"	4300	

* Before any losses

NOTES:

1. For Prestress Notes and Camber Diagram See Sht. No. S-44.
2. Intermediate and End Diaphragms Shall be Class A concrete.
3. Apply epoxy bonding compound to contact area on inside face of fascia beams before placing end diaphragm concrete. Epoxy bonding compound incidental to concrete in bridges.
4. Bars in sleeves shall be grouted in place before pouring the diaphragms.
5. Inserts and sleeves are incidental to prestressed concrete beam.

GEORGE K. NISHIMURA — REGISTERED PROFESSIONAL ENGINEER No. 1388 — HAWAII, U.S.A.

THIS WORK WAS PREPARED BY ME OR UNDER MY SUPERVISION

HAROLD TAKASHI MIYAMOTO — REGISTERED PROFESSIONAL ENGINEER No. 1514 — HAWAII, U.S.A.

THIS WORK WAS PREPARED BY ME OR UNDER MY SUPERVISION

STATE OF HAWAII
DEPARTMENT OF TRANSPORTATION
HIGHWAYS DIVISION

NIMITZ CONNECTOR (EB)
RAMP "A" AND RAMP "B"

PRESTRESS BEAM DETAILS
SHEET 2 OF

KEEHI INTERCHANGE
F.A.I. PROJECT NO. 1-HI-1(108)17

SCALE: DATE: JULY, 1981

SHEET No. S-45 OF 49 SHEETS

ORIGINAL PLAN | NOTE BOOK | No. | SURVEY PLOTTED BY | DRAWN BY | TRACED BY | DESIGNED BY | QUANTITIES BY | CHECKED BY | DATE

ADD. 127

FED. ROAD DIST. NO.	STATE	FED. AID PROJ. NO.	FISCAL YEAR	SHEET NO.	TOTAL SHEETS
HAWAII	HAW.	I-HI-1(168)17	1982	128	145

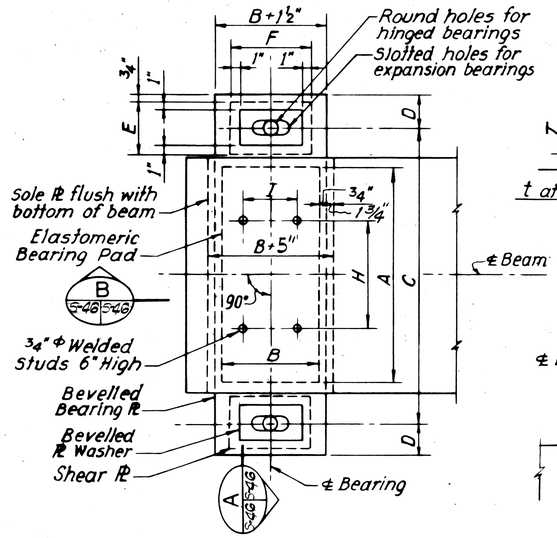

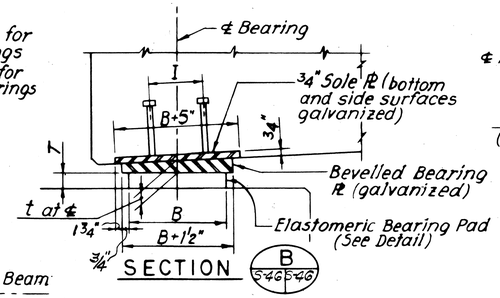

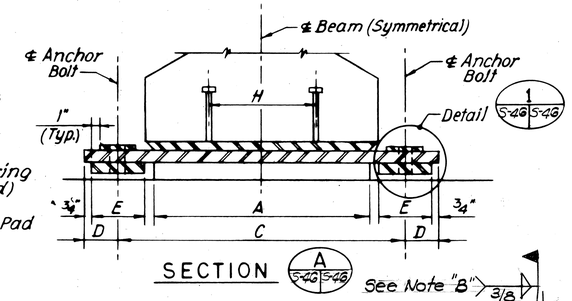

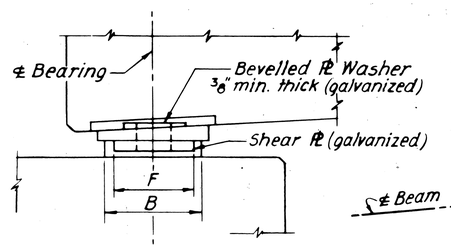

BEARING DETAILS

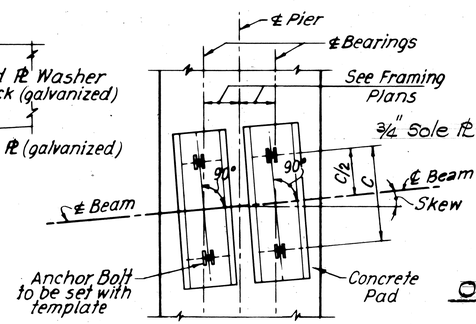

ANCHOR BOLT PLAN

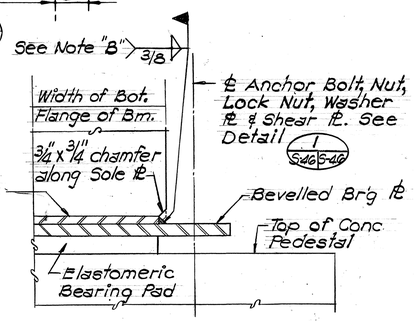

OPTIONAL DETAIL FOR SOLE Pl
Not to scale

NOTE: "A"

At his option the Contractor may use bearing plates of uniform thickness, t, specified on the Beam Table Sht. No. S-43 instead of beveled bearing plates, where the bevels ¼":12 or less. In these instances, the concrete seats shall be bevelled to compensate for the bearing plates being of uniform thickness.

NOTE: B

The Contractor shall minimize and dissipate the heat generated during the field welding of the ¾" sole plate to the bevelled bearing plate and during the field galvanizing of the weld. The Contractor shall take all necessary precautions to avoid burning the elastomeric bearing pad during welding and galvanizing. Welding of the sole plate to the bearing plate shall be done prior to the pouring of diaphragm and deck. Temporary wooden shims (A x B x ¾" min. thickness) shall be placed between the beveled bearing plates and the elastomeric bearing pads during field welding and galvanizing. Shims shall be removed.

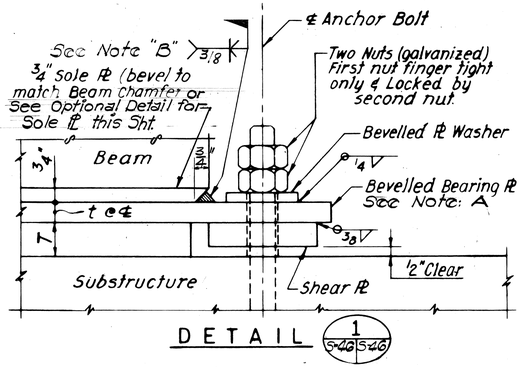

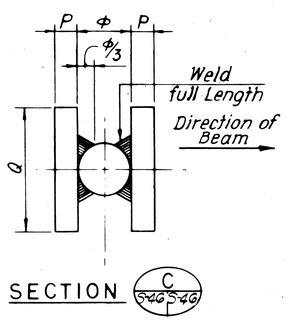

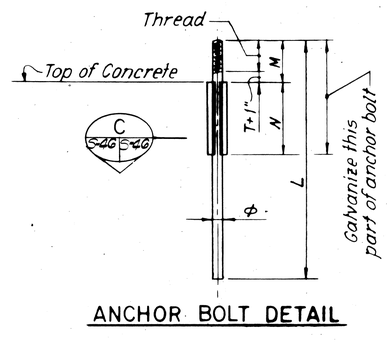

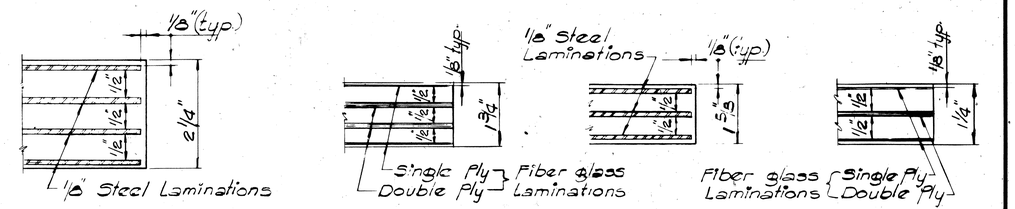

ELASTOMERIC BEARING PAD DETAILS

BEARING AND ANCHOR BOLT TABLE

BEARING TYPE	ELASTOMERIC BEARING PAD A	B	T	STEEL DIMENSIONS C	D	E	F	t	STUD SPACING H	I	ANCHOR BOLT HOLES HINGED BRGS.	EXP. BRGS.	ANCHOR BOLT Φ	L	M	ANCHOR PLATES N	Q	P
1H	16"	8"	1⅝"	24"	3¾"	6"	8"	See Beam Table on Sht. #	10"	6"	1½" Φ		1¼"	32"	8"	6"	3"	½"
1E												1½" x 4"						
2H	12"	8"	1⅝"	20"	3¾"	6"	8"		8"	6"	1½" Φ		1¼"	32"	8"	6"	3"	½"
2E												1½" x 4"						
3H	24"	8"	1⅝"	32"	3¾"	6"	8"		12"	6"	1¾" Φ		1½"	33"	9"	8"	4"	⅝"
3E												1¾" x 4"						
4H	19"	12"	1⅝"	27"	3¾"	6"	8"		8"	6"	2" Φ		1¾"	39"	9"	8"	4½"	⅝"
4E												2" x 4"						
5H	24"	14"	2¼"	33"	4¼"	7"	10"		12"	9"	2¼ Φ	—	2"	45"	10"	9"	5"	3¼"

NOTES:

1. Elastomeric Bearing Pads, Anchor bolts and bevelled bearing Pl's are incidental to Concrete in bridges.
2. Sole Pl's welded studs are incidental to beams.
3. Durometer hardness of elastomeric pad shall be 60 ± 5.

FIBER GLASS LAMINATED PADS

All bearing seat elevations (Denoted also as bush hammer or pad elevations) are based on steel laminated elastomeric bearing pads. If the contractor elects to use fiber glass laminated elastomeric pads, instead of steel laminated elastomeric pads, he shall comply with the following requirements.

a. The fiber glass laminated elastomeric pads shall comply with the details shown on the plans and the requirements of the Special Provisions.

b. Appropriate revisions shall be made to the bearing seat elevations and shear Pl thickness to reflect the reduction in thickness for the fiber glass laminated bearing pads. Any such revision shall be approved by the Engineer.

Date	REVISION
11-3-82	Revised note and welding symbol of Sole Pl on Detail 1 5-46 5-46. Added Optional Detail for Sole Pl.

THIS WORK WAS PREPARED BY ME OR UNDER MY SUPERVISION

THIS WORK WAS PREPARED BY ME OR UNDER MY SUPERVISION

STATE OF HAWAII
DEPARTMENT OF TRANSPORTATION
HIGHWAYS DIVISION
NIMITZ CONNECTOR (EB)
RAMP "A" AND RAMP "B"

BEARING DETAILS

KEEHI INTERCHANGE
F.A.I. PROJ. NO. I-HI-1 (168)17
SCALE: AS SHOWN DATE: JULY, 1981

SHEET NO. S-46 OF 49 SHEETS

ORIGINAL PLAN | SURVEY PLOTTED BY | DRAWN BY | TRACED BY | DESIGNED BY | QUANTITIES BY | CHECKED BY | DATE | NOTE BOOK | No.

ADD. 128

FED. ROAD DIST. NO.	STATE	FED. AID PROJ. NO.	FISCAL YEAR	SHEET NO.	TOTAL SHEETS
HAWAII	HAW.	I-HI-1(168)17	1982	129	145

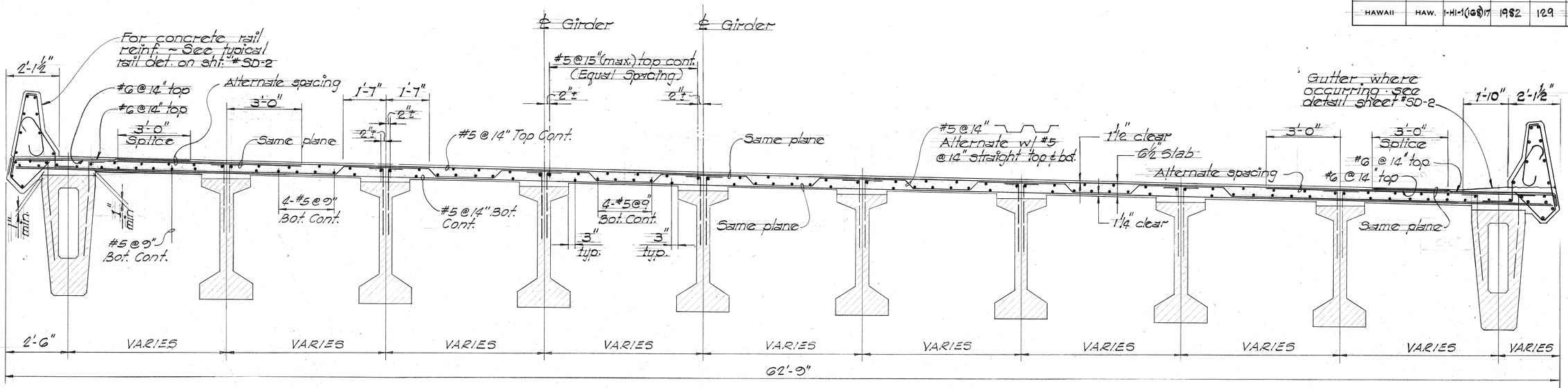

NORMAL DECK SECTION

NIMITZ CONNECTOR (EB)

(FROM STA. 22+94 TO STA. 30+94.36)

LOOKING TOWARDS INCREASING STATIONS

Scale: ½" = 1'-0"

NOTES

1. In general all deck transverse bars shall be placed either radially or normal to the baseline. All transverse bars that are placed radially to the baseline shall be spaced as indicated on plans, measured along the edge of deck with the maximum curve length.
2. For additional reinforcing at deck drains - See detail sheet # SD-9.
3. See deck framing plans for girder spacing sheets # S-37 & S-38
4. Deck slab shall be Class BD concrete.

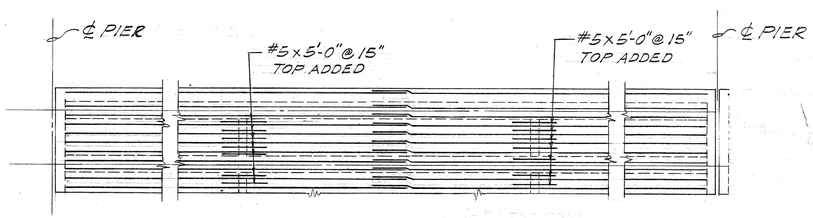

EXTERIOR SPAN - TYPE IV GIRDER

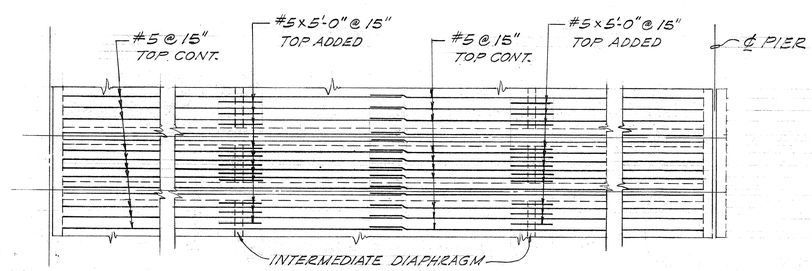

INTERIOR SPAN - TYPE IV GIRDER

TYPICAL ARRANGEMENT OF TOP REINFORCEMENT

Scale: ⅛" = 1'-0"

ORIGINAL PLAN	SURVEY PLOTTED BY	DATE
	DRAWN BY	
	TRACED BY	
NOTE BOOK	DESIGNED BY	
	QUANTITIES BY	
No.	CHECKED BY	

GEORGE K. NISHIMURA REGISTERED PROFESSIONAL ENGINEER No. 1388 HAWAII, U.S.A.

THIS WORK WAS PREPARED BY ME OR UNDER MY SUPERVISION

HAROLD TAKASHI MIYAMOTO REGISTERED PROFESSIONAL ENGINEER No. 1514 HAWAII, U.S.A.

THIS WORK WAS PREPARED BY ME OR UNDER MY SUPERVISION

STATE OF HAWAII
DEPARTMENT OF TRANSPORTATION
HIGHWAYS DIVISION

NIMITZ CONNECTOR (EB)
RAMP "A" AND RAMP "B"
TYPICAL DECK SECTION & TYPICAL DECK REINF.

KEEHI INTERCHANGE
F.A.I. PROJ. NO. I HI-1 (168)17

SCALE: AS SHOWN DATE: JULY, 1981

SHEET No. S-47 OF 49 SHEETS

FED. ROAD DIST. NO.	STATE	FED. AID PROJ. NO.	FISCAL YEAR	SHEET NO.	TOTAL SHEETS
HAWAII	HAW.	I-H1-1(68)17	1982	130	145

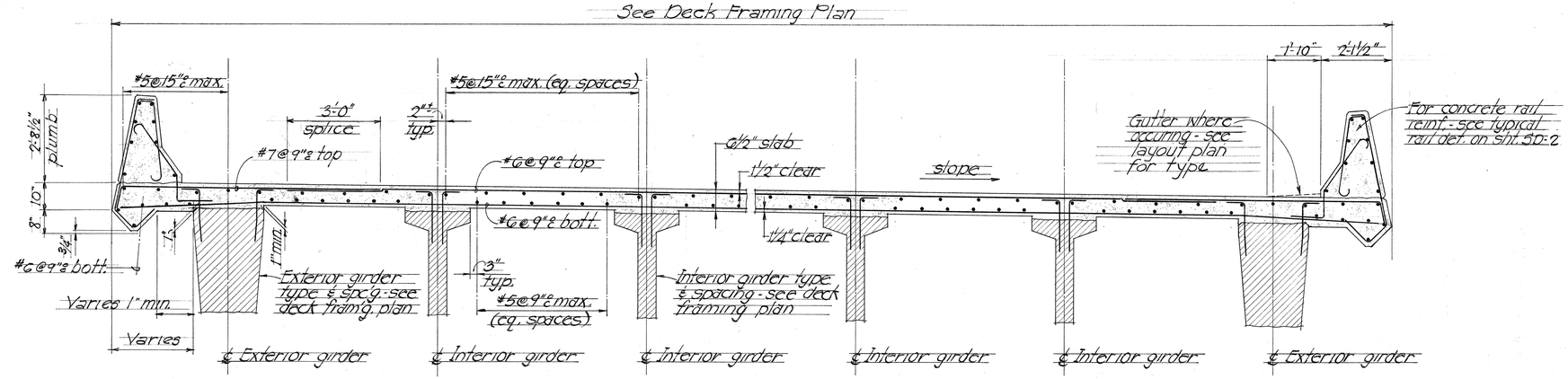

TYPICAL DECK SECTION RAMP "A" STA. 18+82 THRU RAMP "A" STA. 23+67 AND RAMP "B" STA. 14+84

Scale: ½" = 1'-0"

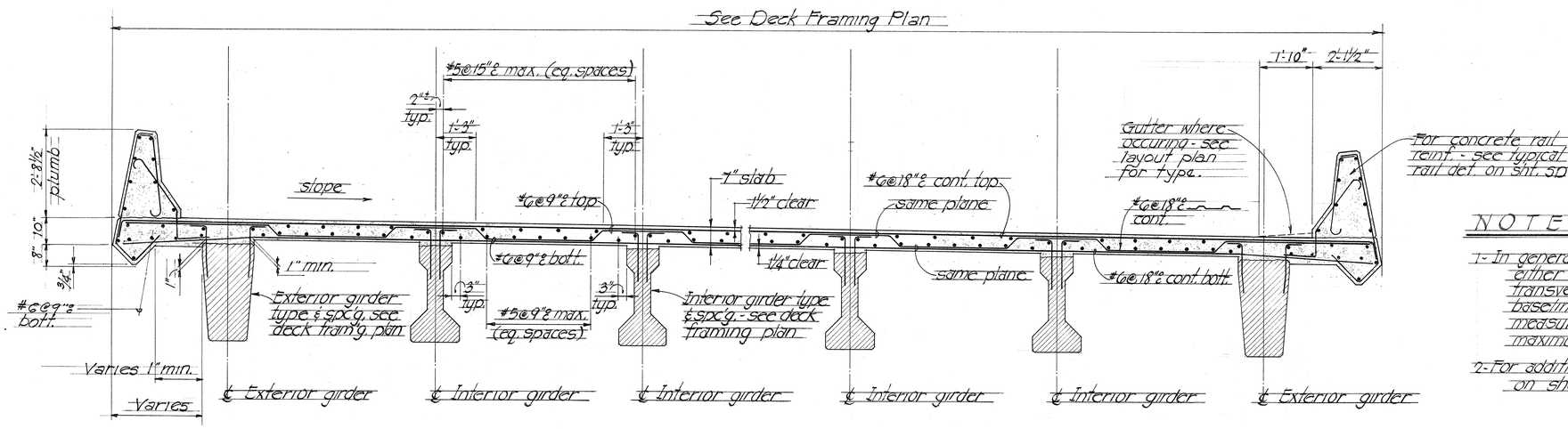

TYPICAL DECK SECTION RAMP "A" STA. 14+55.2 THRU STA. 18+82

Scale: ½" = 1'-0"

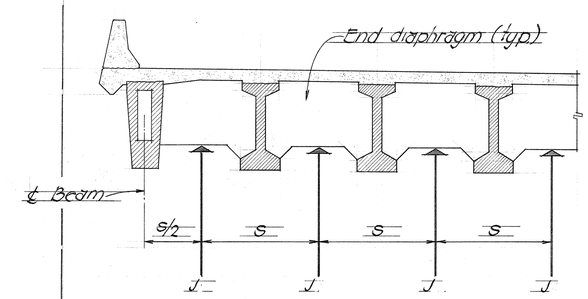

FUTURE JACKING DIAGRAM

Scale: ¼" = 1'-0" (NOT IN CONTRACT)

LEGEND

J Denotes jacking force.
S Denotes beam spacing.

NOTE

Place jacks under the end diaphragms as shown in above diaphragms for any lifting of the superstructure.

Future jacking diagram shown for reference only. Jacking is not in contract

NOTES:

1- In general all deck transverse bars shall be placed either radially or normal to the baseline. All transverse bars that are placed radially to the baseline shall be spaced as indicated on plans, measured along the edge of deck with the maximum curve length.

2- For additional reinforcing at deck scuppers-see detail on sheet #5-41 and sheet #SD-9.

HAROLD TAKASHI MIYAMOTO REGISTERED PROFESSIONAL ENGINEER No. 1514 HAWAII, U.S.A.

GEORGE K. NISHIMURA REGISTERED PROFESSIONAL ENGINEER No. 1388 HAWAII, U.S.A.

THIS WORK WAS PREPARED BY ME OR UNDER MY SUPERVISION

THIS WORK WAS PREPARED BY ME OR UNDER MY SUPERVISION

STATE OF HAWAII
DEPARTMENT OF TRANSPORTATION
HIGHWAYS DIVISION

NIMITZ CONNECTOR (E.B.)
RAMP "A" & RAMP "B"
TYPICAL DECK SECTION
KEEHI INTERCHANGE
F.A.I. PROJ. NO. I-H1-1(168)17

Scale: As shown Date: July, 1981

SHEET No. 5-48 OF 49 SHEETS

ORIGINAL PLAN	SURVEY PLOTTED BY	DATE
	DRAWN BY	
	TRACED BY	
NOTE BOOK	DESIGNED BY	
	QUANTITIES BY	
No.	CHECKED BY	

PRINTED ON NO. 1000H CLEARPRINT

No.	Date	Revision
1	12/22/82	Revise headwall for cushion barrier.

FED. ROAD DIST. NO.	STATE	FED. AID PROJ. NO.	FISCAL YEAR	SHEET NO.	TOTAL SHEETS
HAWAII	HAW.	I-HI-1(168)17	1982	131	145

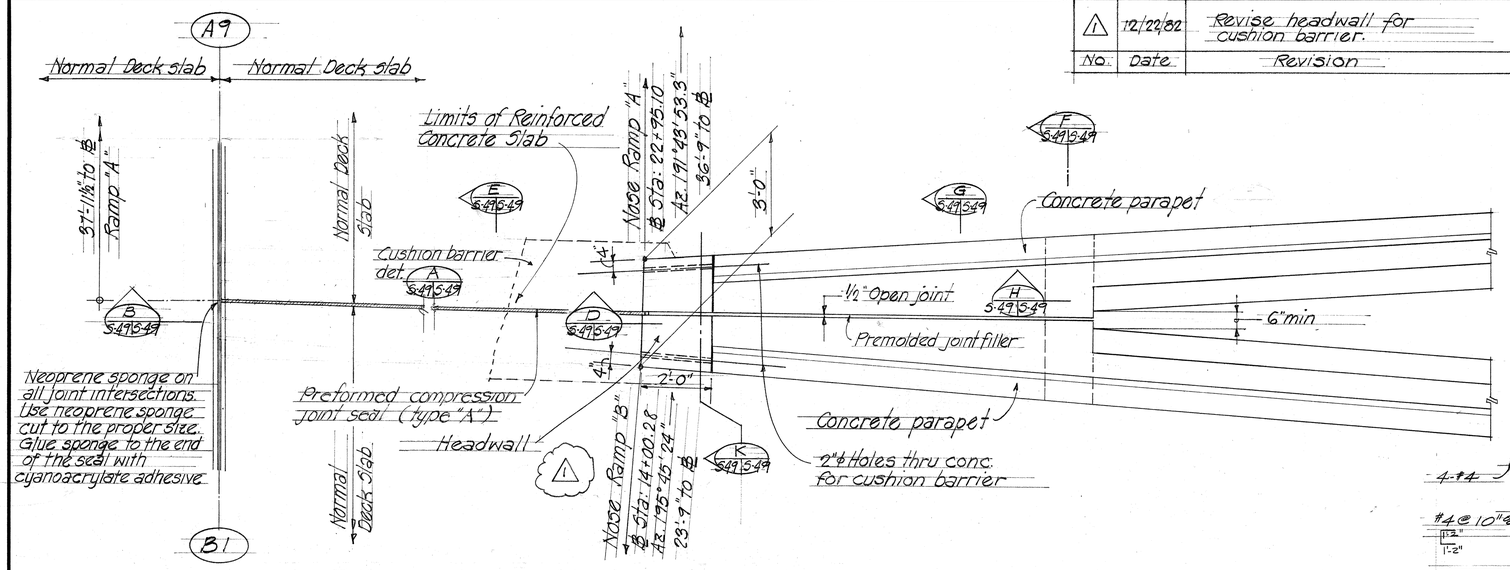

A 5-5 5-49 PARTIAL DETAIL PLAN @ RAMP "A" & RAMP "B" NOSE
Scale 1/2" = 1'-0"

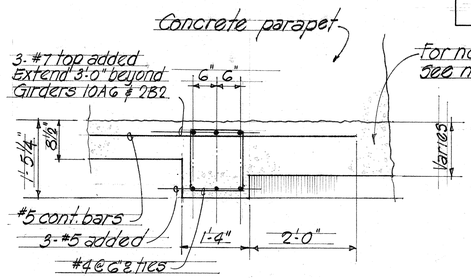

SECTION H 5-49 5-49
Scale 3/4" = 1'-0"

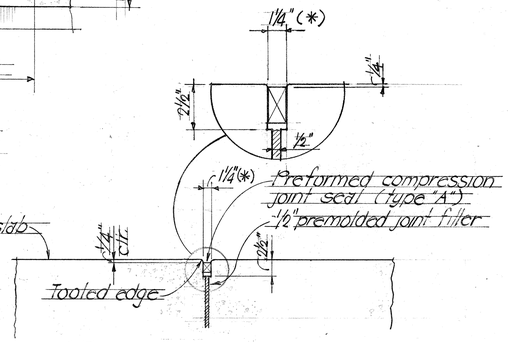

(*) Joint opening at time of installation of joint seals.

DETAIL J 5-49 5-49
Scale 1½" = 1'-0"

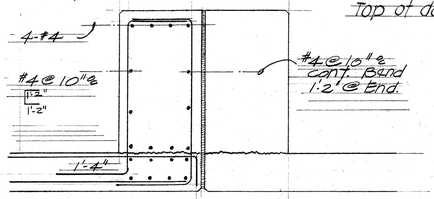

SECTION K 5-49 5-49
SCALE: 3/4" = 1'-0"

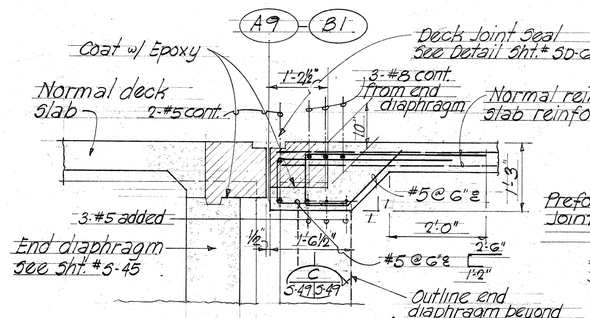

SECTION B 5-49 5-49
Scale 3/4" = 1'-0"

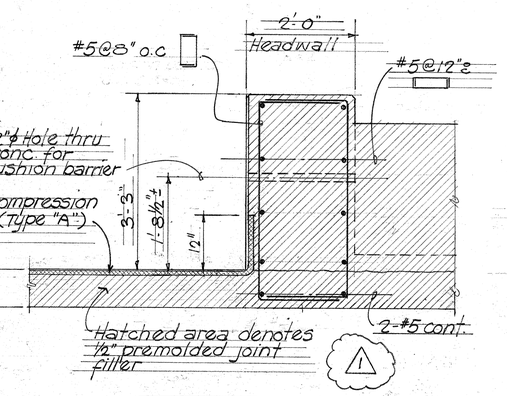

SECTION D 5-49 5-49
Scale: 3/4" = 1'-0"

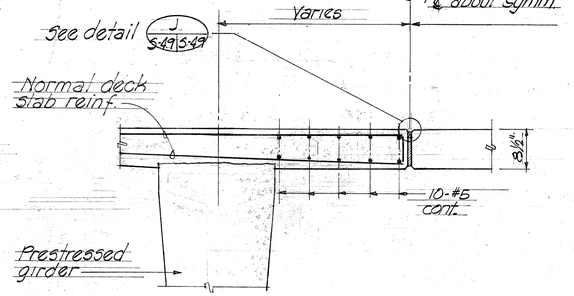

SECTION E 5-49 5-49
Scale: 3/4" = 1'-0"

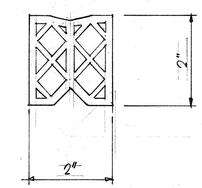

TYPE "A" JOINT SEAL
Not to scale

NOTE: Hatched area denotes area to be poured during installation of Deck joint seal.

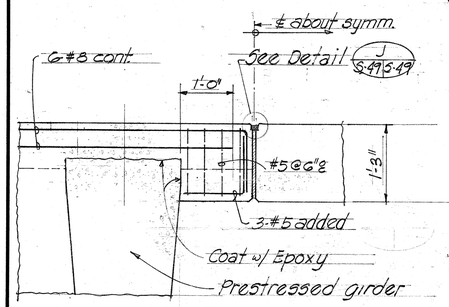

SECTION C 5-49 5-49
Scale 3/4" = 1'-0"

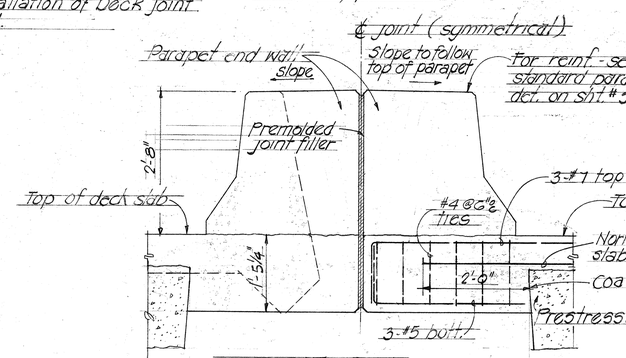

SECTION F 5-49 5-49
Scale: 3/4" = 1'-0"

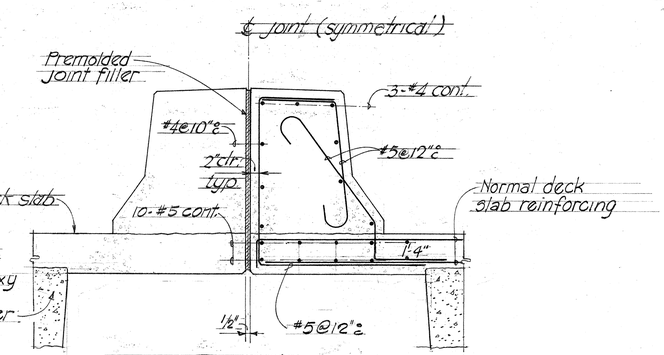

SECTION G 5-49 5-49
Scale: 3/4" = 1'-0"

ORIGINAL PLAN	DATE
DRAWN BY	
TRACED BY	
DESIGNED BY	
QUANTITIES BY	
CHECKED BY	
NOTE BOOK	
No.	

HAROLD TAKASHI MIYAMOTO REGISTERED PROFESSIONAL ENGINEER No. 1514 HAWAII, U.S.A.

GEORGE K. NISHIMURA REGISTERED PROFESSIONAL ENGINEER No. 1388 HAWAII, U.S.A.

THIS WORK WAS PREPARED BY ME OR UNDER MY SUPERVISION

THIS WORK WAS PREPARED BY ME OR UNDER MY SUPERVISION

STATE OF HAWAII
DEPARTMENT OF TRANSPORTATION
HIGHWAYS DIVISION

NIMITZ CONNECTOR (E.B.)
RAMP "A" & RAMP "B"
MISCELLANEOUS DETAILS
KEEHI INTERCHANGE
F.A.I. PROJ. NO. I-HI-1 (168)17
Scale: As shown Date: JULY, 1981

SHEET No. 5-49 OF 49 SHEETS

C.O. 131

PRINTED ON NO. 1000H CLEARPRINT

FED. ROAD DIST. NO.	STATE	FED. AID PROJ. NO.	FISCAL YEAR	SHEET NO.	TOTAL SHEETS
HAWAII	HAW.	I-HI-1(168)17	1982	132	145

1. GENERAL SPECIFICATIONS: HAWAII DEPARTMENT OF TRANSPORTATION, STANDARD SPECIFICATIONS FOR ROAD AND BRIDGE CONSTRUCTION, 1976, TOGETHER WITH SPECIAL PROVISIONS PREPARED FOR THIS CONTRACT.
2. DESIGN SPECIFICATIONS: A.A.S.H.T.O. 1977 STANDARD SPECIFICATIONS FOR HIGHWAY BRIDGES AND ITS SUBSEQUENT INTERIM SPECIFICATIONS.
3. LOADS:
   (A) DEAD LOAD: AN ALLOWANCE OF 18 P.S.F. FOR FUTURE WEARING SURFACE OF ASPHALT CONCRETE HAS BEEN PROVIDED FOR IN THE DESIGN.
   (B) LIVE LOAD: HS20-44 OR INTERSTATE LOADING.
4. MATERIALS:
   (A) ALL CONCRETE SHALL BE CLASS A UNLESS OTHERWISE NOTED. SEE SKETCH & NOTES ON APPROPRIATE SHEETS.
   (B) ALL REINFORCING STEEL SHALL BE A.S.T.M. A615, GRADE 40 UNLESS OTHERWISE NOTED.
   (C) ALL STRUCTURAL STEEL SHALL BE A.S.T.M. A-36, HOT DIP GALVANIZED, UNLESS OTHERWISE NOTED.
   (D) ALL ANCHOR BOLTS, WASHERS AND NUTS SHALL BE A.S.T.M. A-307, HOT DIP GALVANIZED, UNLESS OTHERWISE SPECIFIED.
   (E) FOR MATERIALS OF PRESTRESSED CONCRETE PILES SEE APPLICABLE PRESTRESSED CONCRETE NOTES.
5. DESIGN STRESSES: SHALL FOLLOW A.A.S.H.T.O. STANDARD SPECIFICATIONS FOR HIGHWAY BRIDGES IN ADDITION TO THOSE LISTED BELOW.

CONCRETE	CLASS A OR BD	ALL OTHERS (EXCEPT PRESTRESSED CONCRETE BEAMS AND UNLESS OTHERWISE NOTED ON THE PLANS)
F'c	3000 P.S.I.	4000 P.S.I.
Fc	1200 P.S.I.	1600 P.S.I.
N	9	8

~~FOR PRESTRESSED CONCRETE BEAMS, SEE PRESTRESSED CONCRETE NOTES.~~ N.I.C.

6. REINFORCEMENT:
   (A) THE MINIMUM COVERING MEASURED FROM THE SURFACE OF THE CONCRETE TO THE FACE OF ANY REINFORCING BARS SHALL BE AS FOLLOWS:
   A.1. DECK SLABS (FOR BOX GIRDERS, T-BEAMS, PRESTRESSED BEAMS)
      A. TOP BARS = 1 1/2"
      B. BOTTOM BARS = 1 1/4"
   A.2. BOX GIRDERS
      A. 1 1/4" TO STIRRUP FROM OUTSIDE FACES
      B. 1" TO STIRRUP FROM INSIDE FACES.
   A.3. ~~FOR PRESTRESSED CONCRETE BEAMS SEE PRESTRESSED CONCRETE BEAM DETAILS.~~ N.I.C.
   A.4. ABUTMENTS, PIERS AND RETAINING WALLS = 2"
   A.5. COLUMNS = 2" TO TIES
   A.6. CONCRETE CAST AGAINST AND PERMANENTLY EXPOSED TO EARTH = 3".
   A.7. CONCRETE EXPOSED TO SEA WATER = 4". (COLUMN PEDESTALS AND FOOTINGS IN STREAM)
   (B) REINFORCING BARS SHALL BE DETAILED IN ACCORDANCE WITH A.C.I. MANUAL OF STANDARD PRACTICE FOR DETAILING REINFORCED CONCRETE HIGHWAY STRUCTURES UNLESS OTHERWISE NOTED.
   (C) MINIMUM CLEAR SPACING BETWEEN PARALLEL BARS SHALL BE 1 1/2 TIMES THE DIAMETER OF BARS (FOR NON BUNDLED BARS), BUT IN NO CASE SHALL THE CLEAR DISTANCE BETWEEN THE BARS BE LESS THAN 1 1/2 TIMES THE MAXIMUM SIZE OF THE COARSE AGGREGATE.
   (D) ALL DIMENSIONS RELATING TO REINFORCING BARS (EG. SPACING OF BARS, ETC.,) ARE TO CENTERS OF BARS UNLESS OTHERWISE NOTED.
   (E) REINFORCING BARS SHALL BE SECURELY TIED AT ALL INTERSECTIONS AND LAP SPLICES EXCEPT WHERE THE SPACING OF INTERSECTIONS IS LESS THAN ONE FOOT IN EACH DIRECTION, IN WHICH CASE ALTERNATE INTERSECTIONS SHALL BE TIED.
   (F) VERTICAL COLUMN BARS SHALL BE ARRANGED IN SUCH A MANNER AS TO AVOID INTERFERENCE WITH PIER CAP BARS ABOVE AS DIRECTED BY THE ENGINEER.
7. ELASTOMERIC PADS: BOTTOM OF BRIDGE BEARING PADS SHALL BE SECURED TO THE CONCRETE SEATS, TO PREVENT DISPLACEMENT, WITH ADHESIVES APPROVED BY THE ENGINEER.
8. CONSTRUCTION METHODS.
   (A) SEE STANDARD SPECIFICATIONS AND SPECIAL PROVISIONS.
   (B) IN GENERAL TOP OF CONCRETE DECK SLAB SHALL BE CONSTRUCTED TO FOLLOW THE ROADWAY VERTICAL AND HORIZONTAL CURVES.
   (C) FALSEWORK FOR PIER CAPS SHALL BE SUPPORTED BY THE PIER COLUMNS AND/OR PILE CAPS. IN NO INSTANCE SHALL FORM SUPPORTS BE CARRIED TO MUDSILLS, ETC. ON GRADE.
   (D) GIRDER CONCRETE SEATS RECEIVING ELASTOMERIC PADS SHALL BE POURED MONOLITHICALLY WITH SUPPORTING STRUCTURE. BEARING AREA DEVIATION FROM PLANE SHALL NOT EXCEED 1/16-INCH. THE PAD SHALL BE CONSTRUCTED HIGHER THAN SHOWN ON PLANS & SHALL THEN BE GROUND DOWN TO THE REQUIRED ELEVATION.
   (E) SPREAD FOOTINGS SHALL BE EXCAVATED AND POURED NEAT AGAINST UNDISTURBED GROUND. IN CASE OF OVER EXCAVATION, SPACE BETWEEN FOOTING AND GROUND SHALL BE FILLED WITH CONCRETE AT THE CONTRACTOR'S EXPENSE AND AS DIRECTED BY THE ENGINEER. THE MINIMUM QUALITY OF THE FILL CONCRETE SHALL BE CLASS D.
   (F) IN THE INSTALLATION OF ANCHOR BOLTS FOR BRIDGE BEARINGS, LIGHTING STANDARDS AND EXPRESSWAY BRIDGE SIGN STRUCTURES, THE CONTRACTOR SHALL PROVIDE RIGID TEMPLATES TO MAINTAIN THE PROPER LOCATIONS AND SHALL PROTECT SUCH ANCHOR BOLTS AT ALL TIMES DURING THE PERIOD OF CONSTRUCTION. METHODS SHALL BE APPROVED BY THE ENGINEER.
   (G) EXCEPT AS OTHERWISE NOTED, ALL VERTICAL DIMENSIONS ARE MEASURED PLUMB.
9. GENERAL
   (A) ALL ITEMS NOTED INCIDENTAL WILL NOT BE PAID FOR SEPARATELY.
   (B) THE CONTRACTOR SHALL VERIFY THE LOCATION OF ALL UTILITY LINES AND NOTIFY THE RESPECTIVE OWNERS BEFORE COMMENCING THE WORK OF EXCAVATION OR THE DRIVING OF PILES, INCLUDING ANY TEMPORARY PILING OR SHEETING.
   (C) FOR CONCRETE FINISH SEE STANDARD SPECIFICATIONS AND FOR ARCHITECTURAL TREATMENT OF COLUMNS, SEE DETAILS.
   (D) CONSTRUCTION JOINTS MAY BE RELOCATED OR ADDITIONAL ONES ADDED SUBJECT TO THE APPROVAL OF THE ENGINEER.
   (E) UNLESS OTHERWISE NOTED, ALL EXPOSED CONCRETE EDGES SHALL BE CHAMFERED 3/4" x 3/4".
   (F) STANDARD DETAIL DRAWINGS REFER TO ALL STRUCTURES IN GENERAL, EXCEPT FOR MODIFICATIONS AS MAY BE REQUIRED FOR SPECIAL CONDITIONS. FOR SUCH MODIFICATIONS REFER TO THE CORRESPONDING DETAILED DRAWINGS.
   (G) FOR ELECTRICAL CONDUIT LOCATION DETAILS SEE ELECTRICAL DRAWINGS.
10. FOUNDATION:
   (A) DESIGN LOAD* FOR PILE TYPE A=115 TONS & PILE TYPE B=85 TONS, UNLESS OTHERWISE NOTED.
   (B) FOR BORING LOGS AND THEIR LOCATION SEE SHEET NOS. B-1, B-2, ETC.
   (C) THE PILE TIP ELEVATIONS SHOWN ON THE PLANS ARE BASED ON BORING DATA.
   (D) IN DRIVING EACH GROUP OF PILES, THE CONTRACTOR SHALL START FROM CENTER OF THE GROUP AND PROCEED OUTWARDS, EXCEPT FOR TEST PILES AND LOAD TEST PILES.
   (E) THE CONTRACTOR SHALL VERIFY THE TYPE OF SURFACE SOIL BEFORE STARTING TO DRIVE ANY PILE. WHERE THERE IS A SURFACE CRUST, A TEMPORARY STEEL SLEEVE SHALL BE USED TO PROTECT THE BITUMEN COATING ON PILES. THE SLEEVE SHALL EXTEND THROUGH THE DEPTH OF THE CRUST. THE SLEEVE SHALL BE REMOVED AFTER THE PILE IS DRIVEN AND THE ANNULAR SPACE AROUND THE PILE SHALL BE BACKFILLED AS SPECIFIED IN THE SPECIAL PROVISIONS. (FOR DETAILS SEE SHEET NO. SD-11)
   (F) SQUARE PILES ARE TO BE SO ALIGNED THAT FRONT AND REAR FACES OF PILES ARE PARALLEL TO CENTERLINE OF PIER.
   (G) LOAD TEST PILES INDICATED IN FOUNDATION PLAN SHALL BE FURNISHED 13' LONGER THAN REGULAR PILES.
   (H) TEST PILES INDICATED IN FOUNDATION PLAN SHALL BE FURNISHED 5' LONGER THAN REGULAR PILES.

* DESIGN LOAD FOR PILES EXCLUDES PILE WEIGHT AND ESTIMATED DOWNDRAG.

11. REFERENCES:
   (A) ~~FOR PRESTRESSED CONCRETE NOTES, SEE DRAWINGS FOR PRESTRESSED BEAM DETAILS.~~ N.I.C.
   (B) FOR SIGN STRUCTURE NOTES, SEE DRAWING NO. ES-1.
   (C) FOR ADDITIONAL PILE NOTES SEE DRAWING NO. SD-10.
12. THE CONTRACTOR SHALL VERIFY THE LOCATIONS & DIMENSIONS OF SUBSTRUCTURES BUILT BY OTHERS PRIOR TO FABRICATION OF THE GIRDERS WHICH WILL BE SUPPORTED BY THESE STRUCTURES.
13. SYMBOLS AND ABBREVIATIONS

(E) OR (EXP.)	- EXPANSION	O.C.	- ON CENTERS
(H)	- HINGE	O/S	- OFFSET
ALT.	- ALTERNATE	STR.	- STRAIGHT OR STRINGER
AZ.	- AZIMUTH	STIRR.	- STIRRUP
℄	- CENTERLINE	TYP.	- TYPICAL
ℬ	- BASELINE	(T) OR T.	- TOP
E.F.	- EACH FACE	(B) OR B.	- BOTTOM
B.F.	- BOTH FACES	BRG.	- BEARING
F.F.	- FAR FACE	T.O.D.	- TOP OF DECK
N.F.	- NEAR FACE	W.P.	- WORKING POINT
C.J.	- CONSTRUCTION JOINT	@	- AT
CL.	- CLEAR	Ø OR DIA.	- DIAMETER
EL., ELEV.	- ELEVATION	ℙ	- PLATE
E.P.	- EDGE OF PAVEMENT		
EB	- EAST BOUND		
FIN. GR.	- FINISHED GRADE		
WB	- WEST BOUND		
INV.	- INVERT		
JT.	- JOINT		
N.T.S.	- NOT TO SCALE		

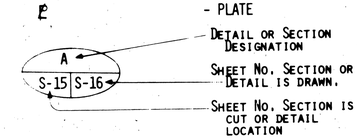

PRESTRESSED CONCRETE GIRDERS WILL BE FURNISHED BY OTHERS

ORIGINAL PLAN | SURVEY PLOTTED BY | DRAWN BY | TRACED BY | DESIGNED BY | QUANTITIES BY | CHECKED BY | DATE | NOTE BOOK | No.

VIJAY CHANDRA REGISTERED PROFESSIONAL ENGINEER No. 4120 HAWAII, U.S.A.

THIS WORK WAS PREPARED BY ME OR UNDER MY SUPERVISION.
Vijay chandra
Signature

STATE OF HAWAII
DEPARTMENT OF TRANSPORTATION
HIGHWAYS DIVISION

GENERAL NOTES

KEEHI INTERCHANGE
F.A.I. PROJECT NO. I-HI-1(168):17
SCALE: DATE: 8/17/81

SHEET NO. Y-1 OF 11 SHEETS SD-1

FED. ROAD DIST. NO.	STATE	FED. AID PROJ. NO.	FISCAL YEAR	SHEET NO.	TOTAL SHEETS
HAWAII	HAW.	F-H-1(168).17	1982	133	145

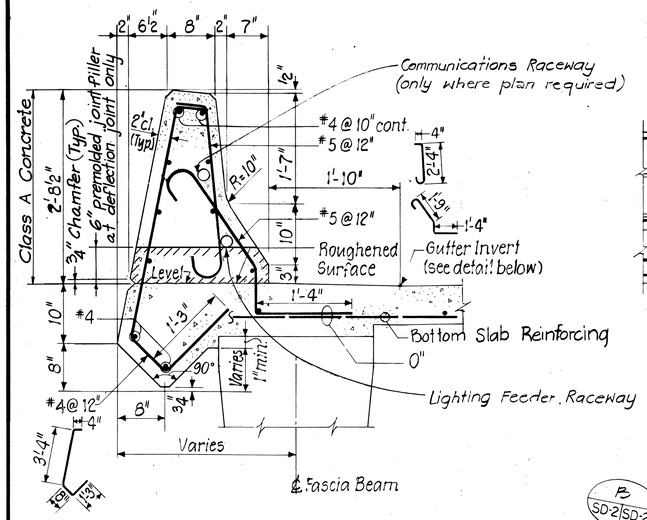

STANDARD PARAPET SECTION
Scale: 1" = 1'-0"

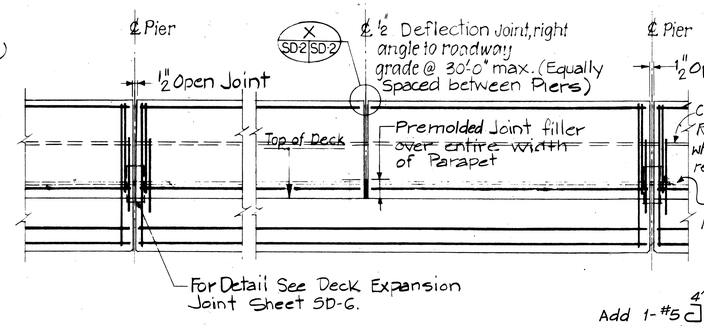

STANDARD PARAPET
TYPICAL LONGITUDINAL SECTION
Scale: ½" = 1'-0"

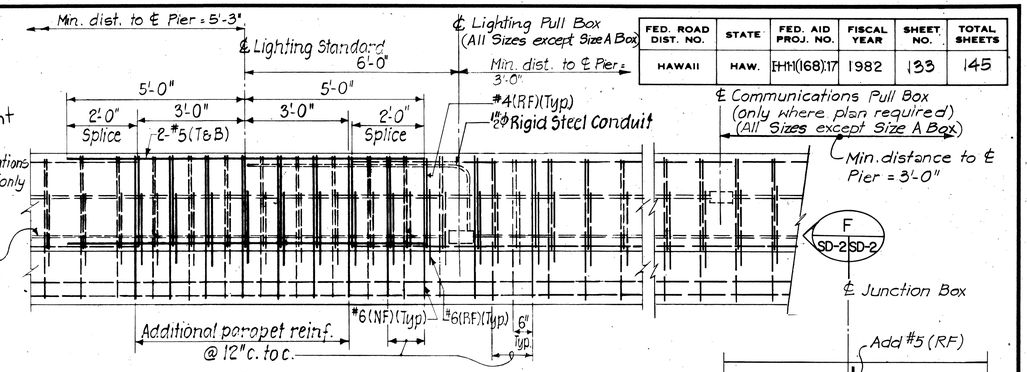

NOTE: For location of Lighting Standard See General Plan

PARAPET REINF. AT LIGHTING STANDARD & JUNCTION BOX
TYPICAL LONGITUDINAL SECTION
Scale: ½" = 1'-0"

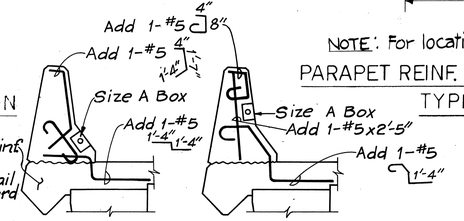

AT LIGHTING PULL BOX
AT COMMUNICATION PULL BOX

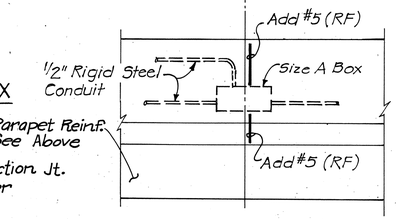

ADDED REINF. AT SIZE A PULL BOX
N.T.S.

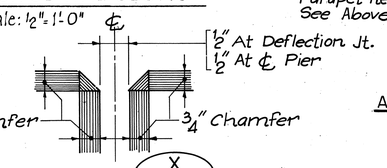

DETAIL X SD-2 SD-2
N.T.S.

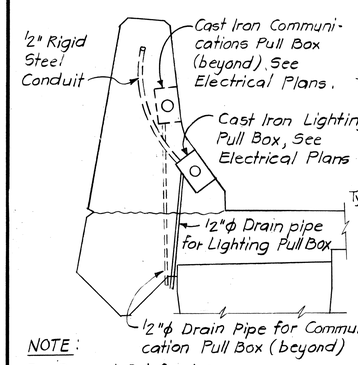

NOTE:
For Parapet Reinforcing See Standard Parapet Section.

PARAPET DETAIL AT JUNCTION BOXES
Scale: 1" = 1'-0"

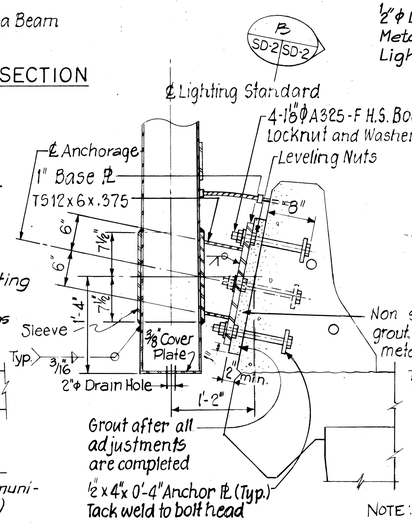

ALTERNATE METHOD
LIGHTING STANDARD ATTACHMENT
Scale: 1" = 1'-0"

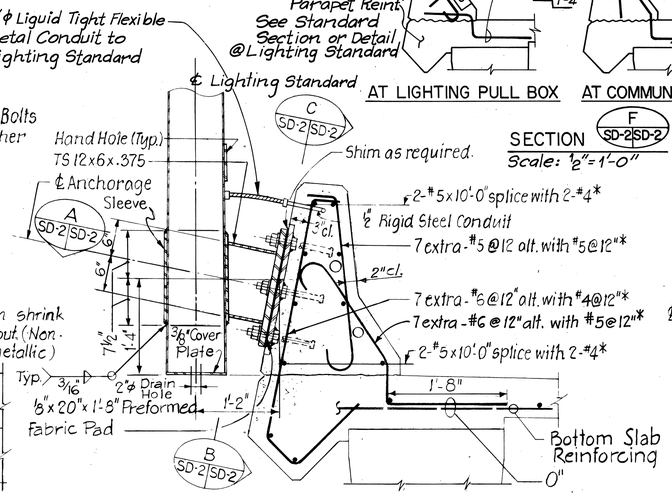

NOTE: Lighting Standards shall be mounted plumb.

*Typical parapet reinforcement

PARAPET DETAIL AT LIGHTING STANDARD
Scale: 1" = 1'-0"

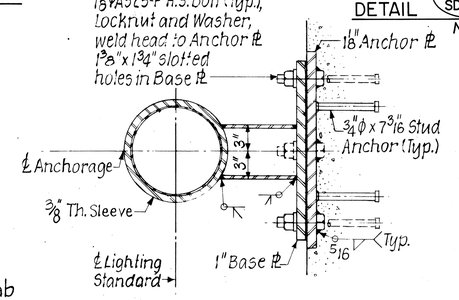

SECTION A SD-2 SD-2
Scale: 1½" = 1'-0"

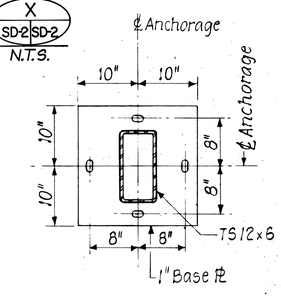

SECTION B SD-2 SD-2
Scale: 1" = 1'-0"

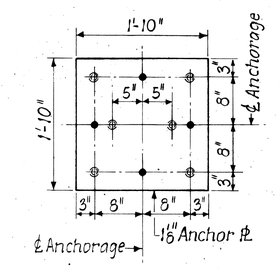

SECTION C SD-2 SD-2
Scale: 1" = 1'-0"

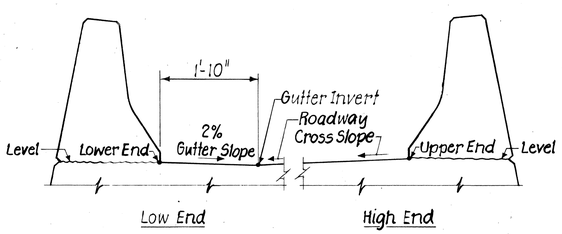

Note: For gutter slope transition, at roadway transition, see Sheet No SD-8.

TYPICAL CROSS SLOPE DETAIL FOR DRAINAGE
Scale: ¾" = 1'-0"

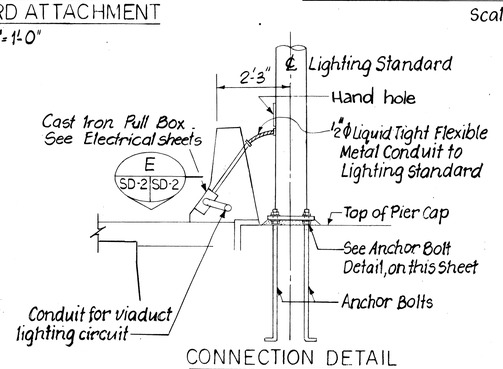

CONNECTION DETAIL
Scale: ½" = 1'-0"

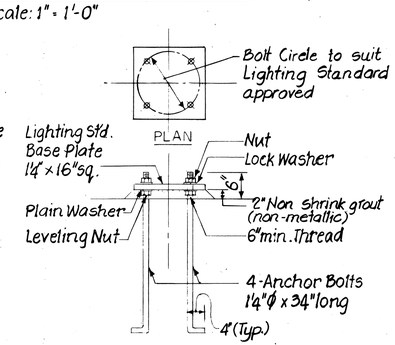

ELEVATION
ANCHOR BOLT DETAIL
Scale: 3/4" = 1'-0"

PIER MOUNTED LIGHTING STANDARD

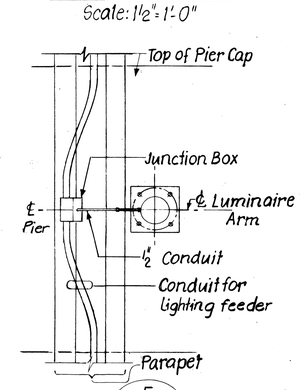

SECTION
Scale: ½" = 1'-0"

NOTE:
Anchorage system for Lighting Standard shall be hot-dip galvanized.

VIJAY CHANDRA
REGISTERED PROFESSIONAL ENGINEER
No. 4120
HAWAII, U.S.A.

THIS WORK WAS PREPARED BY ME OR UNDER MY SUPERVISION.
Vijay Chandra
Signature

STATE OF HAWAII
DEPARTMENT OF TRANSPORTATION
HIGHWAYS DIVISION

STANDARD PARAPET DETAILS

KEEHI INTERCHANGE
F.A.I. PROJECT NO. I-HI-1(168).17
SCALE: AS SHOWN
DATE: 8/17/81

SHEET No. Y-2 OF 11 SHEETS SD-2

ORIGINAL PLAN	SURVEY PLOTTED BY	DATE
	DRAWN BY	
	TRACED BY	
	DESIGNED BY	
NOTE BOOK	QUANTITIES BY	
No.	CHECKED BY	

Rev. 21 Jun 78
Revised & Back checked by HDr 5-8-80

FED. ROAD DIST. NO.	STATE	FED. AID PROJ. NO.	FISCAL YEAR	SHEET NO.	TOTAL SHEETS
HAWAII	HAW.	I-H1-1(168)17	1982	134	145

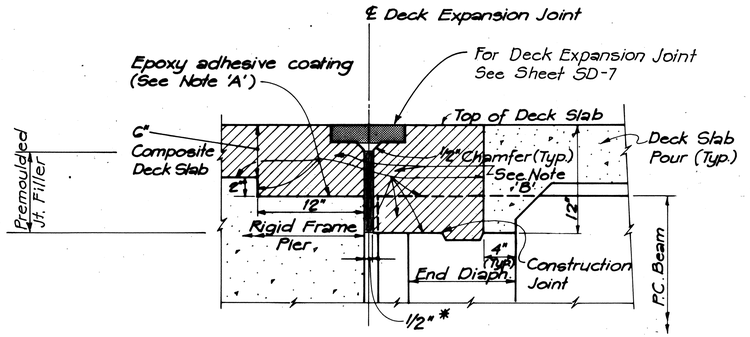

TYPICAL DECK SECTION AT RIGID FRAME
N.T.S.

NOTE 'A': Just prior to concreting of the hatched areas, coat the indicated surfaces with an epoxy adhesive. (See Special provision Sec.705.13)

NOTE 'B': Hatched Areas shall be concreted after 14 days of deck slab pour. Anchor devices shall be located and held in their final position, as per Manufacturer's requirement, during the concreting of the hatched areas.

* Joint opening at time of installation of joint. Joint to be formed by Premolded filler.

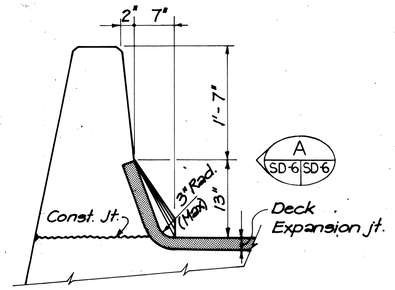

TYPICAL SECTION AT STANDARD PARAPET

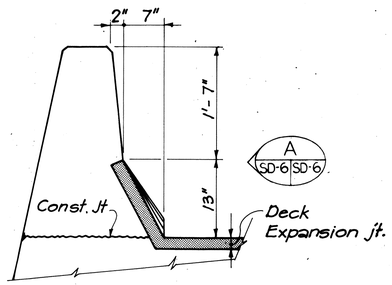

ALTERNATE DETAIL AT PARAPET
N.T.S.

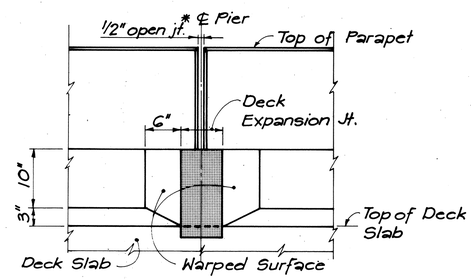

VIEW A SD-6 SD-6
N.T.S.

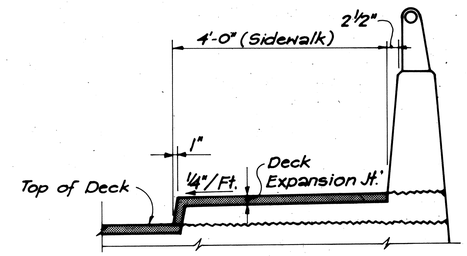

TYPICAL SECTION AT SIDEWALK PARAPET
N.T.S.

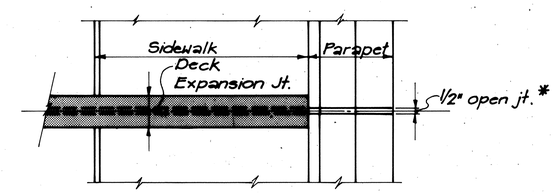

TYPICAL PLAN
N.T.S.

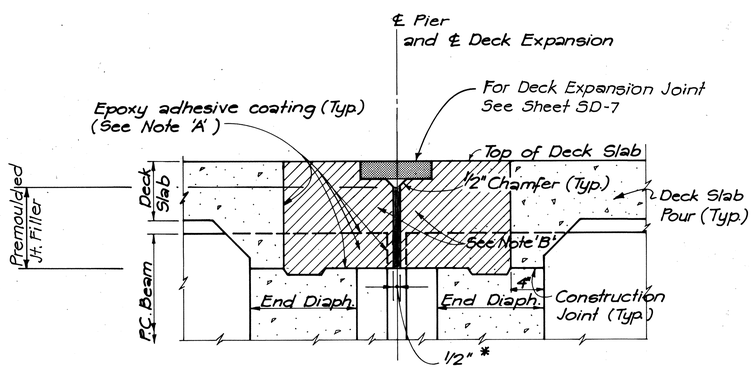

TYPICAL DECK SECTION (AT ALL PIERS EXCEPT RIGID FRAMES)
N.T.S.

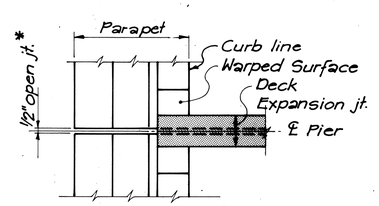

TYPICAL PLAN _ SKEW ANGLE = 0°- 15°
N.T.S.

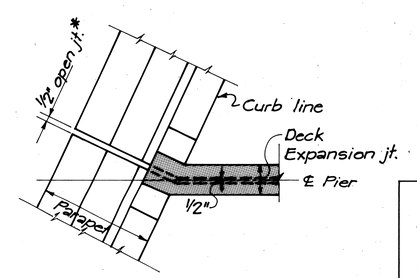

TYPICAL PLAN _ SKEW ANGLE = OVER 15°
N.T.S.

VIJAY CHANDRA REGISTERED PROFESSIONAL ENGINEER No. 4120 HAWAII, U.S.A.

THIS WORK WAS PREPARED BY ME OR UNDER MY SUPERVISION.

Vijay Chandra
Signature

ORIGINAL PLAN	SURVEY PLOTTED BY	DATE
	DRAWN BY	
	TRACED BY	
NOTE BOOK	DESIGNED BY	
	QUANTITIES BY	
No.	CHECKED BY	

STATE OF HAWAII
DEPARTMENT OF TRANSPORTATION
HIGHWAYS DIVISION

STANDARD DETAILS

DECK EXPANSION JOINT
SHEET 1 OF 2

KEEHI INTERCHANGE
F.A.I. PROJECT NO. I-HI-1 (168):17
SCALE: DATE: 8/17/81

SHEET No. Y-3 OF 11 SHEETS SD-6

Rev. 21 Jun 78

FED. ROAD DIST. NO.	STATE	FED. AID PROJ. NO.	FISCAL YEAR	SHEET NO.	TOTAL SHEETS
HAWAII	HAW.	I-H1(168)17	1982	135	145

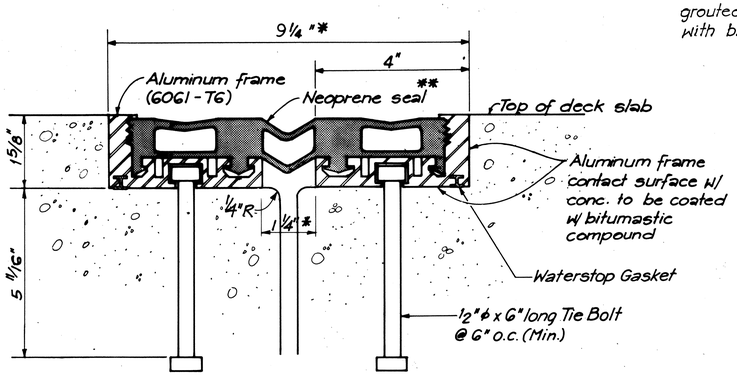

DELASTIFLEX TYPE SM200

(Manufacturer: D.S. Brown & Co.)

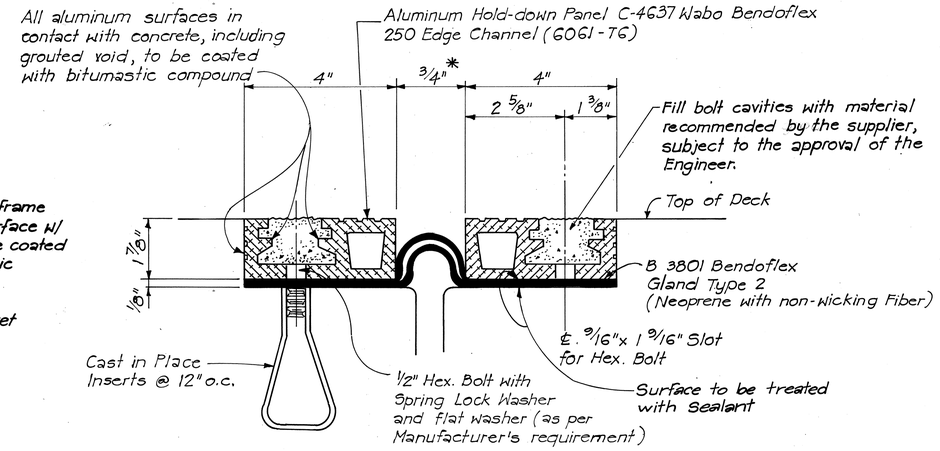

WABO BENDOFLEX 250

(Manufacturer: Watson Bowman Ass. Inc.)

* = Installation width @ 75°F

** = Seal Gland or membrane shall be continuous across the full width of the Structure.

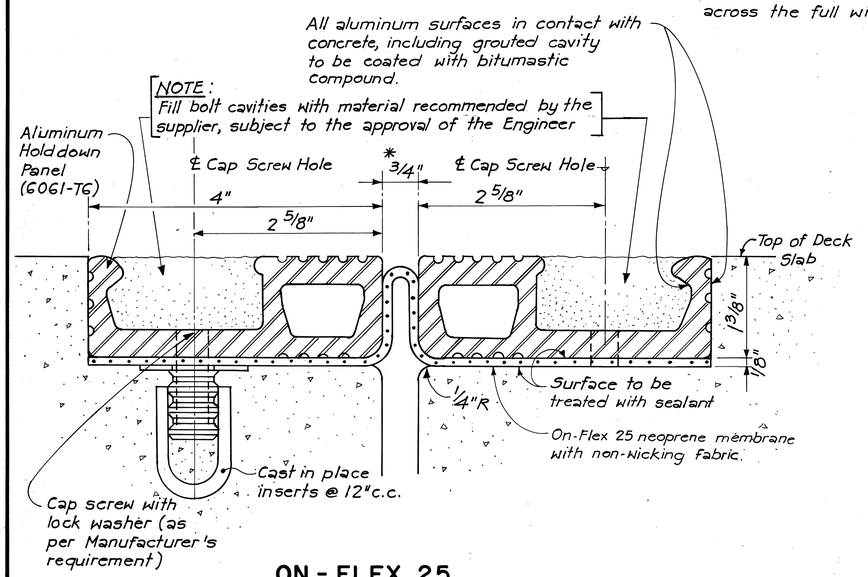

ON-FLEX 25

(Manufacturer: Structural Accessories Inc.)

NOTES:

1. Three alternative Deck Expansion Joint Systems are shown. Contractor has the option of selecting any one of the systems. The Contractor shall submit detailed shop drawings of the selected joint to the Engineer for approval.
2. The Contractor also has the option of using an alternative Deck Expansion Joint System provided it complies with the requirements of the plans and specifications.

ORIGINAL PLAN	SURVEY PLOTTED BY	DATE
	DRAWN BY	
	TRACED BY	
NOTE BOOK	DESIGNED BY	
	QUANTITIES BY	
No.	CHECKED BY	

JOHN P. JOHNSON REGISTERED PROFESSIONAL ENGINEER No. 3647 HAWAII, U.S.A.

THIS WORK WAS PREPARED BY ME OR UNDER MY SUPERVISION

John P. Johnson

STATE OF HAWAII
DEPARTMENT OF TRANSPORTATION
HIGHWAYS DIVISION

STANDARD DETAILS

DECK EXPANSION JOINT
SHEET 2 OF 2

KEEHI INTERCHANGE
F.A.I. PROJECT NO. I-HI-1 (168):17

SCALE: NONE DATE: 8/17/81

SHEET NO. Y-4 OF 11 SHEETS SD-7

Contract #N5B Rev. 21 Jun 78

FED. ROAD DIST. NO.	STATE	FED. AID PROJ. NO.	FISCAL YEAR	SHEET NO.	TOTAL SHEETS
HAWAII	HAW.	H-H(168)17	1982	136	145

NOTE B:
Provide continuous gutter with 2% cross slope on low side of deck, except as otherwise indicated.

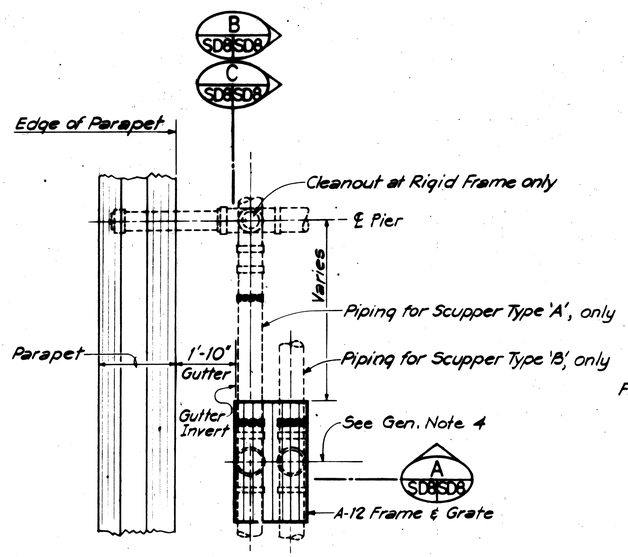

PLAN - SCUPPER
SCALE: 1/2"=1'-0"

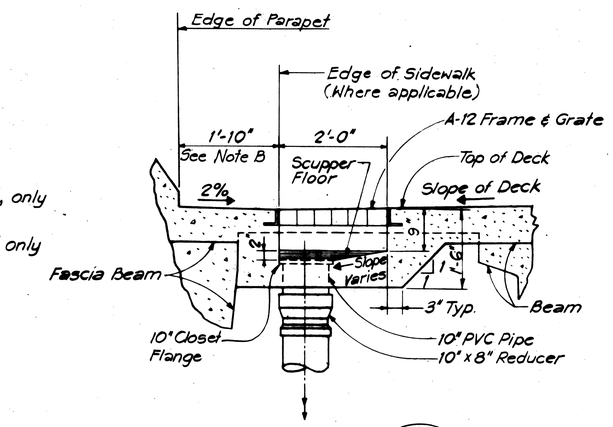

SECTION A SD8SD8
SCUPPER TYPE 'A'
SCALE: 3/4"=1'-0"

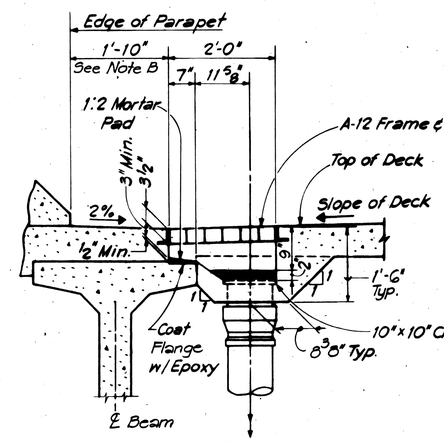

SECTION A SD8SD8
SCUPPER TYPE 'B'
SCALE: 3/4"=1'-0"

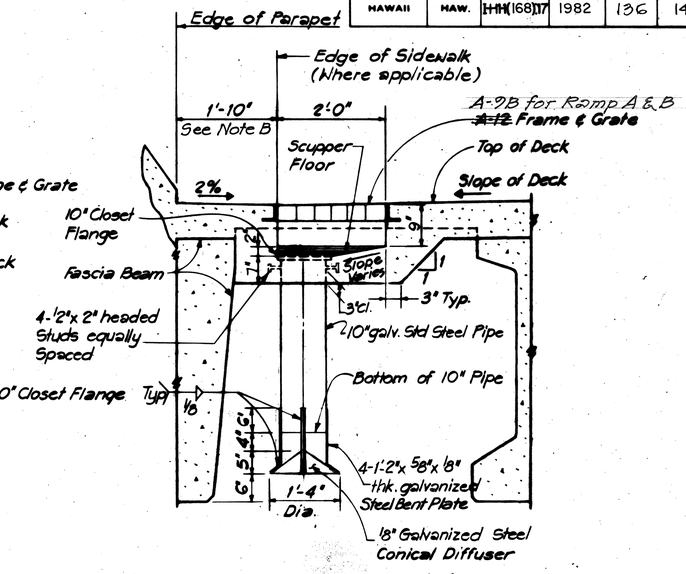

SCUPPER TYPE 'C'
SCALE: 3/4"=1'-0"

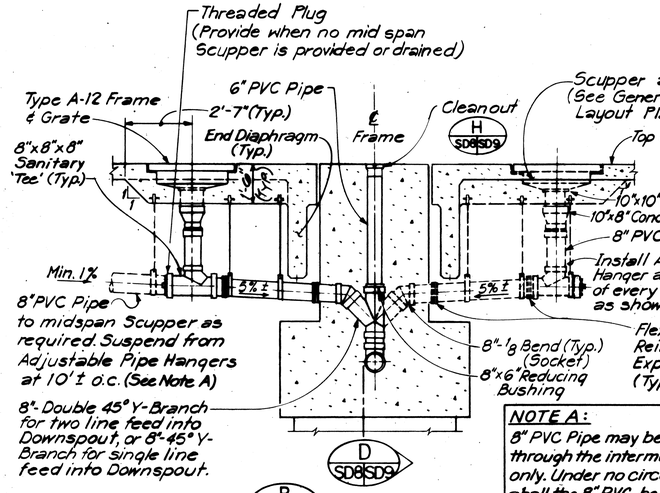

SECTION B SD8SD8
TYPICAL SECTION (AT RIGID FRAME PIERS)
SCALE: 3/8" = 1'-0"

NOTE A:
8" PVC Pipe may be sleeved through the intermediate diaph. only. Under no circumstance shall the 8" PVC be sleeved through the end diaphragms.

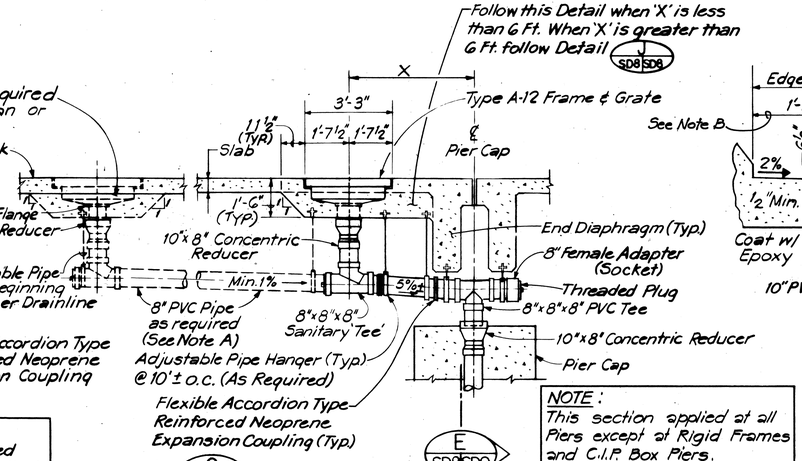

SECTION C SD8SD8
TYPICAL SECTION
SCALE: 3/8" = 1'-0"

NOTE:
This section applied at all Piers except at Rigid Frames and C.I.P. Box Piers.

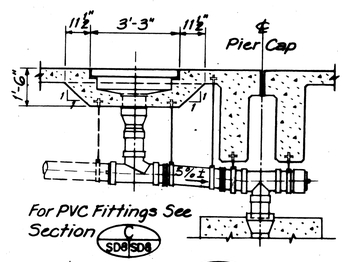

DETAIL J SD8SD8
SCALE: 3/8"=1'-0"

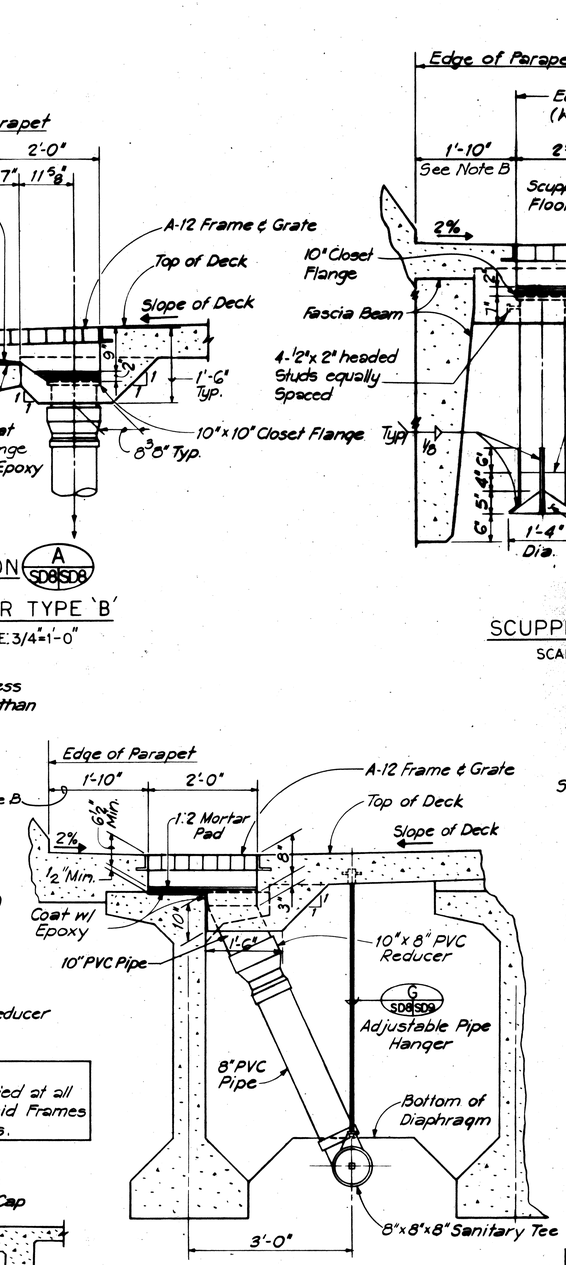

SCUPPER TYPE 'D'
SCALE: 3/4"=1'-0"

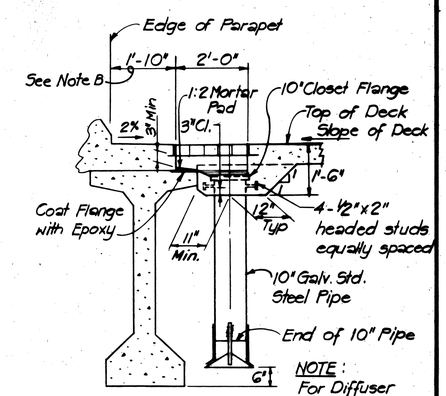

NOTE:
For Diffuser Details see Scupper Type 'C'

SCUPPER TYPE 'E'
SCALE: 1/2" = 1'-0"

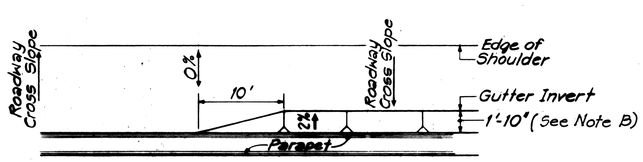

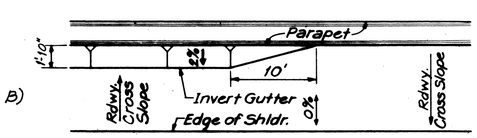

TYPICAL GUTTER TRANSITION AT ROLLOVER
N.T.S.

ORIGINAL PLAN | SURVEY PLOTTED BY | DRAWN BY | TRACED BY | DESIGNED BY | QUANTITIES BY | CHECKED BY | DATE | NOTE BOOK | NO.

VIJAY CHANDRA
REGISTERED PROFESSIONAL ENGINEER No. 4120
HAWAII, U.S.A.

THIS WORK WAS PREPARED BY ME OR UNDER MY SUPERVISION.
Vijay chandra
Signature

STATE OF HAWAII
DEPARTMENT OF TRANSPORTATION
HIGHWAYS DIVISION

STANDARD DETAILS
STRUCTURE DRAINAGE DETAILS
SHEET 1 OF 2

KEEHI INTERCHANGE
F.A.I. PROJECT NO. I-HI-1 (168) :17
SCALE: AS SHOWN
DATE: 8/17/81
SHEET NO. Y-5 OF 11 SHEETS SD-8

Contract #158

FED. ROAD DIST. NO.	STATE	FED. AID PROJ. NO.	FISCAL YEAR	SHEET NO.	TOTAL SHEETS
HAWAII	HAW.	I-H1-(168)17	1982	137	145

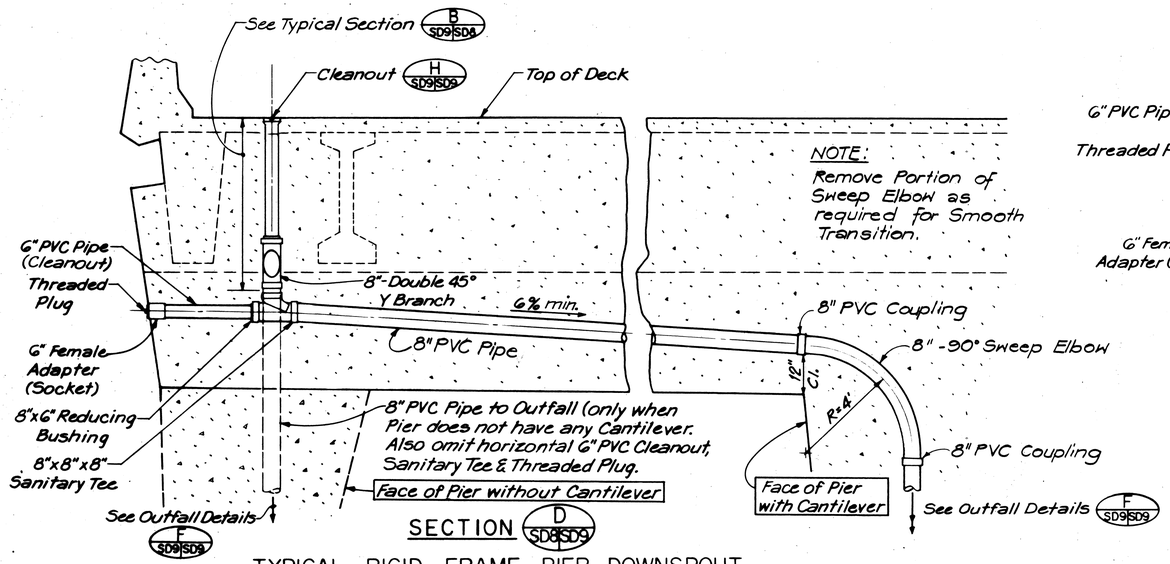

SECTION D SD8|SD9

TYPICAL RIGID FRAME PIER DOWNSPOUT

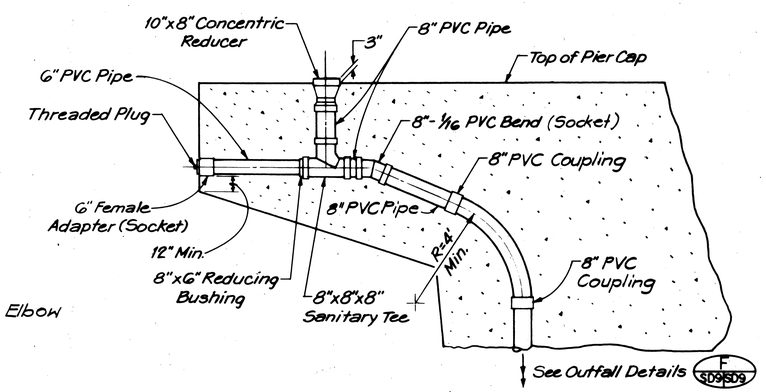

SECTION E SD8|SD9

TYPICAL HAMMERHEAD PIER DOWNSPOUT

(Applies to all Piers except Rigid Frames and C.I.P. Box Piers)

GENERAL NOTES:

1. All Pipe Slopes shall be maximized to the greatest Extent possible without extending below the bottom of the Beams.
2. All PVC Pipes shall be Type I Schedule 40.
3. Deck Drain Cleanout Metal Frame and Cover Casting shall be Ductile Iron designed for Highway Traffic Wheel Loads of 16,000 Lbs And shall conform with ASTM Designation A 536.
4. For Location of Scuppers and Outfall Type, See General Plan (or Layout Plan) of Structure.
5. Deck Drain Cleanout Frame & Cover shall be incidental to Concrete in Bridge unless otherwise noted on plans.

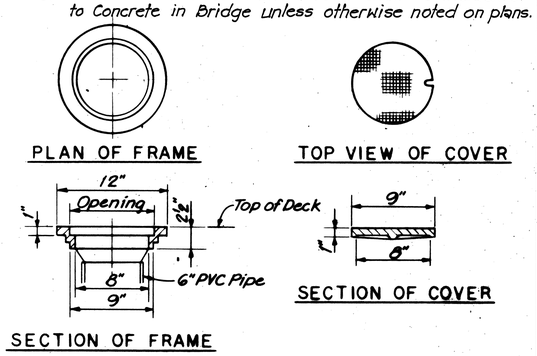

TYPICAL DECK DRAIN CLEANOUT FRAME AND COVER H SD9|SD9

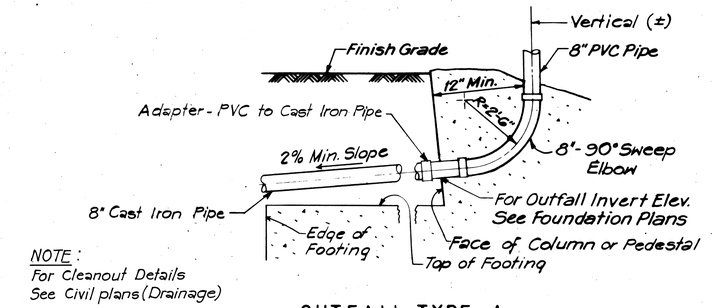

OUTFALL TYPE 1

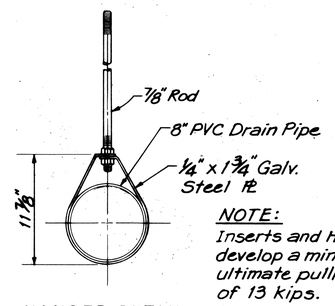

HANGER DETAIL

NOTE: Inserts and Hangers to develop a minimum ultimate pulling strength of 13 kips.

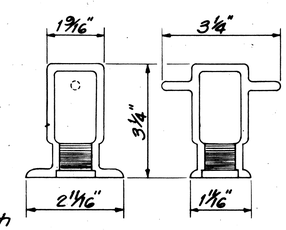

INSERT DETAIL

DETAIL OF PIPE HANGERS AND INSERTS G SD8|SD9

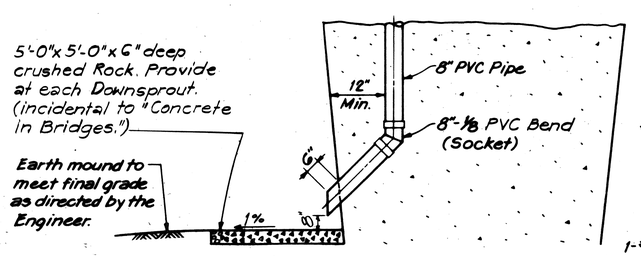

OUTFALL TYPE 2

OUTFALL DETAILS F SD9|SD9

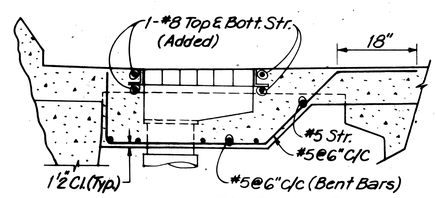

SCUPPER TYPE 'A' & 'C'

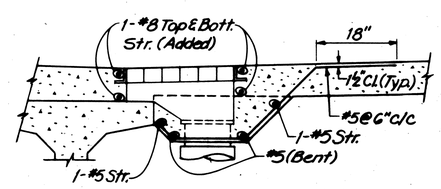

SCUPPER TYPE 'B' & 'E'

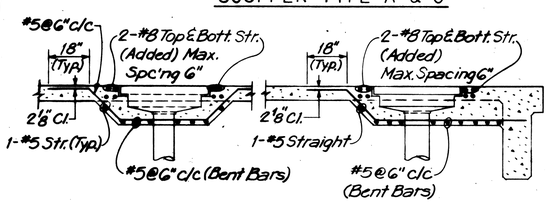

TYPICAL LONGITUDINAL SECTIONS

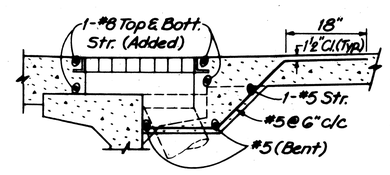

SCUPPER TYPE 'D'

REINFORCEMENT DETAILS AT SCUPPERS

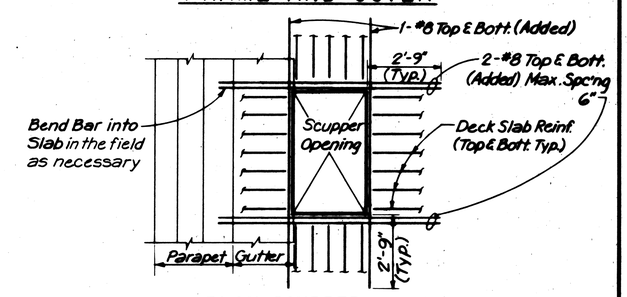

PLAN-SCUPPER

ORIGINAL PLAN	SURVEY PLOTTED BY	DATE
	DRAWN BY	
	TRACED BY	
NOTE BOOK	DESIGNED BY	
	QUANTITIES BY	
No.	CHECKED BY	

VIJAY CHANDRA REGISTERED PROFESSIONAL ENGINEER No. 4120 HAWAII, U.S.A.

THIS WORK WAS PREPARED BY ME OR UNDER MY SUPERVISION.

Vijay chandra
Signature

STATE OF HAWAII
DEPARTMENT OF TRANSPORTATION
HIGHWAYS DIVISION

STANDARD DETAILS

STRUCTURE DRAINAGE DETAILS
SHEET 2 OF 2

KEEHI INTERCHANGE
F.A.I. PROJECT NO. I-HI-1 (168):17

SCALE: N.T.S. DATE: 8/17/81

SHEET NO. Y-6 OF 11 SHEETS SD-9

Contract #NSB

FED. ROAD DIST. NO.	STATE	FED. AID PROJ. NO.	FISCAL YEAR	SHEET NO.	TOTAL SHEETS
HAWAII	HAW.	I-HI-1(168):17	1982	138	145

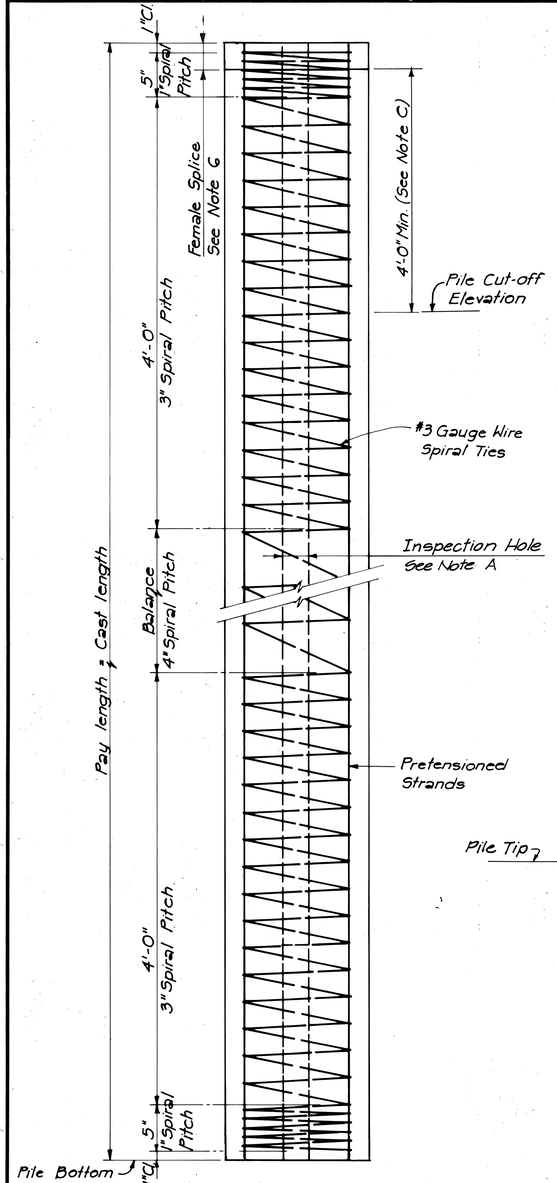

TYPICAL PILE DETAIL

N.T.S.

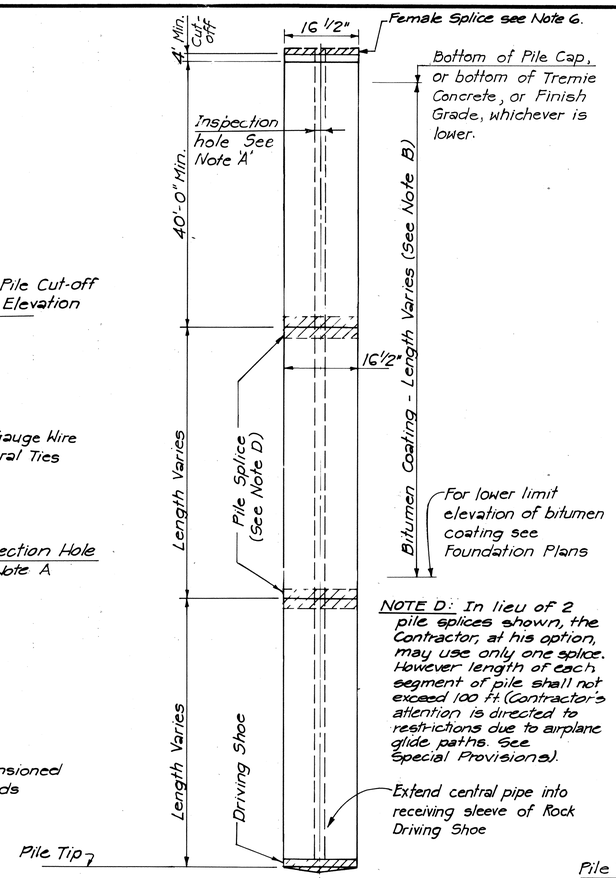

NOTE D: In lieu of 2 pile splices shown, the Contractor, at his option, may use only one splice. However length of each segment of pile shall not exceed 100 ft. (Contractor's attention is directed to restrictions due to airplane glide paths. See Special Provisions).

PILE TYPE A

N.T.S.

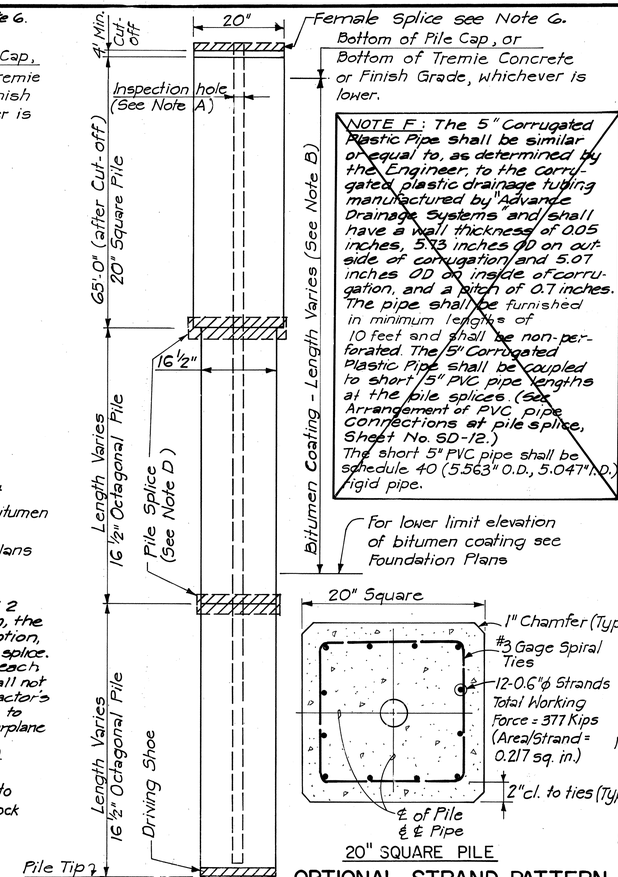

NOTE F: The 5" Corrugated Plastic Pipe shall be similar or equal to, as determined by the Engineer, to the corrugated plastic drainage tubing manufactured by "Advance Drainage Systems" and shall have a wall thickness of 0.05 inches, 5.73 inches OD on outside of corrugation and 5.07 inches OD on inside of corrugation, and a pitch of 0.7 inches. The pipe shall be furnished in minimum lengths of 10 feet and shall be non-perforated. The 5" Corrugated Plastic Pipe shall be coupled to short 5" PVC pipe lengths at the pile splices. (See Arrangement of PVC pipe Connections at pile splice, Sheet No. SD-12.) The short 5" PVC pipe shall be schedule 40 (5.563" O.D., 5.047" I.D.) rigid pipe.

PILE TYPE B

N.T.S.

20" SQUARE PILE

OPTIONAL STRAND PATTERN

Scale: 1 1/2" = 1'-0"

NOTES FOR PILE TYPE A & PILE TYPE B

1. Concrete shall have a minimum 28-day compressive strength of 6500 psi. Required minimum concrete compressive strength before release of strands = 4000 psi.
2. Pretensioned strands shall be 7 wire stress-relieved strands with an ultimate strength of 270 ksi. Diameter of strands shall be as shown on the Typical Pile Sections. Total loss due to creep, shrinkage, elastic shortening and relaxation of steel = 37,000 psi. Total working force shown on the Typical Pile Sections is the net force after all losses.
3. Non-prestressed reinforcing steel for pile build up shall be A.S.T.M. A615 Grade 60. Spiral ties shall be cold drawn A.S.T.M. A82
4. For details of pile splices see sheet No. SD-12.
5. All piles shall have driving shoes.
6. At the top of the top segment of the pile, a female splice as shown on Sheet SD-12 shall be cast with the pile. No pile shall be driven without a female part of the splice at the top of the pile.
7. The splice shall be designed for an ultimate moment of 120 ft. Kips.
8. Portion of pile embedded into footing (or pile cap) shall be of sound concrete. Damaged portions shall be removed and pile shall be built-up to the cut-off elevation shown on the Plan.
9. The plumb of pile shall be checked for conformance to the allowable tolerances, as specified in the Special Provisions, before constructing the build-ups.
10. Work of cutting off Prestressed Concrete Piles or Concrete Build-ups shall be performed in such a manner as to avoid spalling or damaging the pile below cut-off. In case of such damage the pile shall be replaced or repaired by the Contractor at his own expense as directed by the Engineer.
11. Piles are to be manufactured & installed in accordance with the tolerances specified in the Special Provisions. Piles not conforming to the tolerances shall be rejected and will not be paid for. The Contractor shall furnish necessary labor and/or equipment to aid the Engineer in passing the plumb bob through the central inspection hole of each pile. This shall be done in the fabrication yard and immediately after driving each pile. Such assistance shall be incidental to furnishing piles and will not be paid for separately.
12. Defective piles (See Subsection 505.03 (G) of Special Provisions) shall be cut off 1'-0" below bottom of footing or finish grade whichever is lower.
13. Driving on pile build-ups shall not be permitted.

NOTE A: Provide inspection holes in all piles as follows:
1) All piles, except Load Test Piles shall have a 3" PVC Pipe cast in the center of the pile. The pipe shall have a radial tolerance of 1/8" off-set from center of pile except that within 3 feet of the ends of pile segments the radial tolerance shall be 1/16" off-set from the center of the pile. The 3" PVC Pipe shall be Schedule 40 (3.500" O.D., 3.068" I.D.) rigid plain end pipe with separate socket couplings. The allowable deviation from straight for the pipe is 1/8" in any 10 feet of length.
~~2) Load Test Piles shall have a 5" Corrugated Plastic Pipe Cast in the center of the pile instead of the 3" PVC pipe. The pipe shall be placed to the same tolerances specified for the 3" PVC pipe. For additional details see Note F.~~

NOTE B: The Bitumen Coating shall not protrude into Footing or Pile Cap. When a pile is exposed above ground, as in the case of certain pile bents, the bitumen coating shall be up to the finished grade (or stream bed) only. If the Pile Tip ends higher than the estimated Pile Tip Elevation, the Contractor shall remove the bitumen coating from the pile head that is to be embedded into the footing (or Pile Cap), or the portion above the finished grade, as applicable. Payment for removal is incidental to various contr. items.

NOTE C: Remove concrete over this length from top of top segment of pile. Leave Strands & Dowels exposed, for embedment into footing (or pile cap). Cut-off of concrete shall be normal to the axis of pile. For pile cut-off elevations see Foundation Plans.

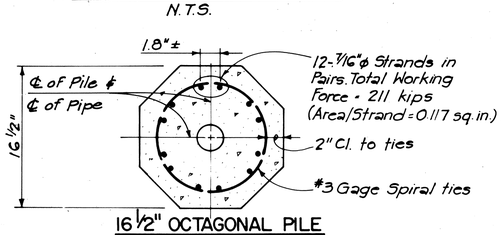

16 1/2" OCTAGONAL PILE

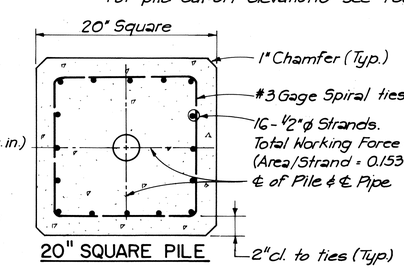

20" SQUARE PILE

TYPICAL PILE SECTION

Scale: 1 1/2" = 1'-0"

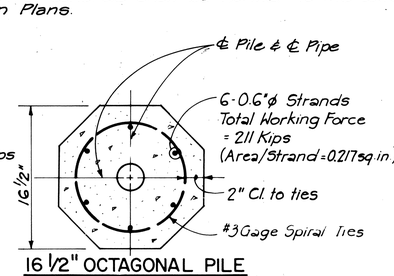

16 1/2" OCTAGONAL PILE

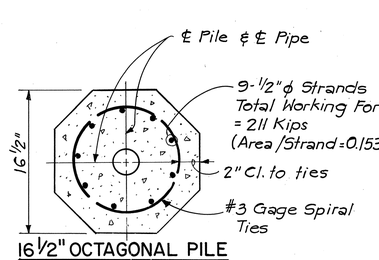

16 1/2" OCTAGONAL PILE

OPTIONAL STRAND PATTERN

Scale: 1 1/2" = 1'-0"

JOHN P. JOHNSON REGISTERED PROFESSIONAL ENGINEER No. 3647

THIS WORK WAS PREPARED BY ME OR UNDER MY SUPERVISION.

John P. Johnson

STATE OF HAWAII
DEPARTMENT OF TRANSPORTATION
HIGHWAYS DIVISION
STANDARD DETAILS

PRESTRESSED CONCRETE PILES

SHEET 1 OF 3

KEEHI INTERCHANGE
F.A.I. PROJECT NO. I-HI-1 (168):17
SCALE: AS SHOWN DATE:

SHEET No. Y-7 OF 11 SHEETS SD-10

ORIGINAL PLAN | SURVEY PLOTTED BY | DRAWN BY | TRACED BY | DESIGNED BY | QUANTITIES BY | CHECKED BY | NOTE BOOK | NO | DATE

Rev. 21 Jun 78

FED. ROAD DIST. NO.	STATE	FED. AID PROJ. NO.	FISCAL YEAR	SHEET NO.	TOTAL SHEETS
HAWAII	HAW.	I-HI-1(168):17	1982	139	145

TABLE OF PILE LOAD TESTS & APPLICABLE FOOTINGS	
Pile Load Test at Pier Number	Applicable to Pier Footings
M6**	AI, AII, AIII, A1 thru A5, NE1, NE2, NE3, HE1, HE2, HE3, HV1, HV2 & HV3
H6**	HE4, HE5, HV4 & HV5
M13**	B1, B2, AC thru A9, & NE4 thru NE7
M19**	NE8 & A10
This table subject to change, depending on results of Test Driving Piles.	

** Denotes Load Test Performed in prior Contracts by Others.

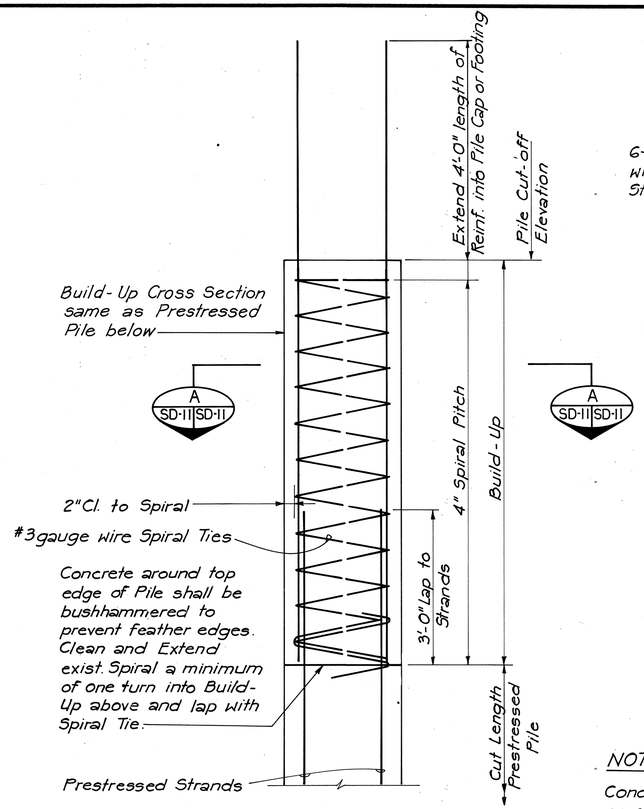

WITHOUT DRIVING

TYPICAL PILE BUILD-UP DETAILS

N.T.S.

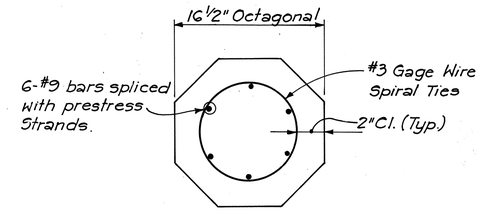

SECTION A SD-11 SD-11

Scale: 1½" = 1'-0"

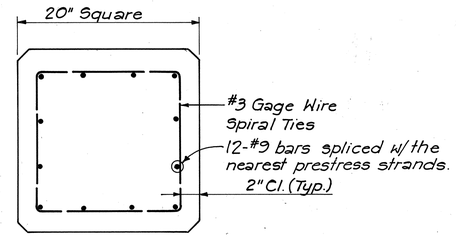

SECTION A SD-11 SD-11

Scale: 1½" = 1'-0"

NOTE:

Concrete in pile build-ups shall have a minimum comp. cyl. strength fc' of 5,000 psi at 28 days.

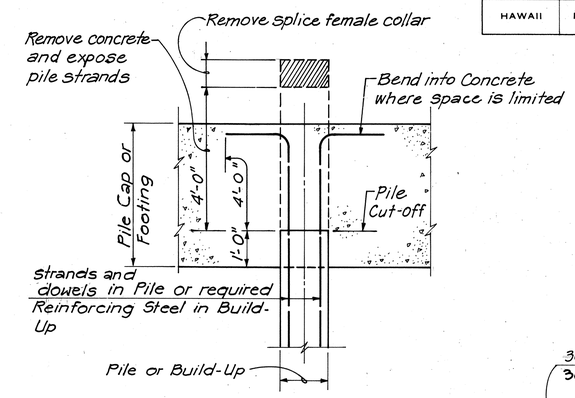

PILE REINFORCEMENT EXTENSION DETAIL

Scale: 1/2" = 1'-0"

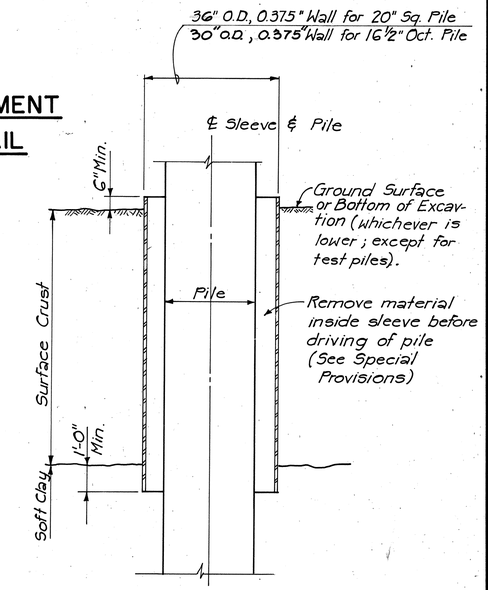

STEEL SLEEVE DETAIL

Not to Scale

NOTES:

1. Surface crust is defined as the material between the ground line, or bottom of excavation, and the uniform soft clays (without the presence of granular materials).
2. Sleeves shall be installed plumb. Allowable deviation from vertical for the sleeve is 1/8" in 10 feet.
3. Splices, if required, shall be made so that inside face of sleeve is flush.

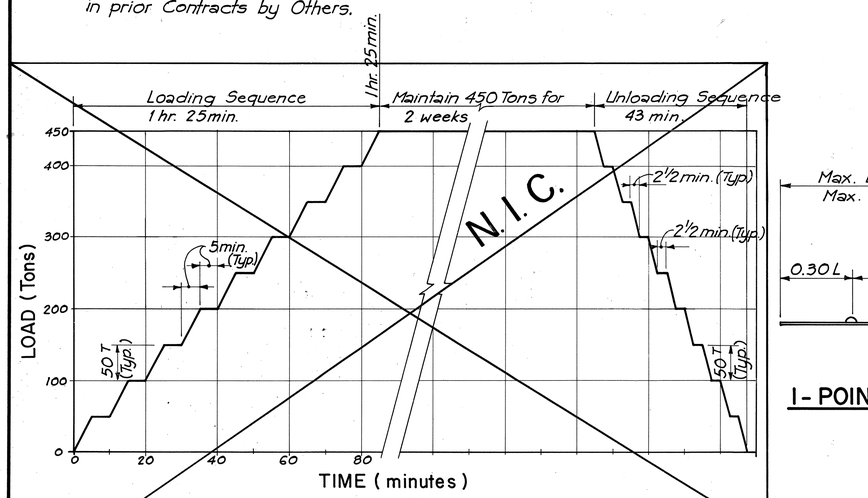

PILE LOAD TEST SEQUENCE DIAGRAM (FOR PILE TYPES A & B)

Scale: Horizontal - 1" = 20 Minutes
Vertical - 1" = 100 Tons

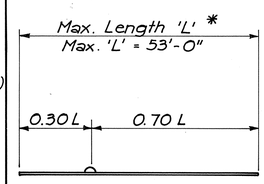

1-POINT PICK-UP

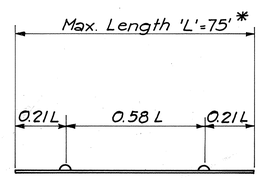

2-POINT PICK-UP

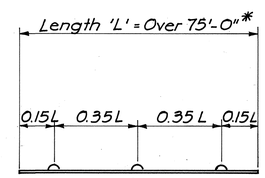

3-POINT PICK-UP

* The Length 'L' is the Distance, End-to-End of Pile before Cut-off

NOTE:

Unless special lifting devices are attached for pick-up points, pick-up points shall be plainly marked on all piles after removal of the forms, and all lifting shall be done at these points. The use of special embedded or attached lifting devices, the employment of pick-up points, or any other method of pick-up shall be subject to approval by Engineer.

ORIGINAL PLAN | NOTE BOOK No. | SURVEY PLOTTED BY | DRAWN BY | TRACED BY | DESIGNED BY | QUANTITIES BY | CHECKED BY | DATE

VIJAY CHANDRA REGISTERED PROFESSIONAL ENGINEER No. 4120 HAWAII, U.S.A.

THIS WORK WAS PREPARED BY ME OR UNDER MY SUPERVISION.

Vijay Chandra
Signature

STATE OF HAWAII
DEPARTMENT OF TRANSPORTATION
HIGHWAYS DIVISION

STANDARD DETAILS

PRESTRESSED CONCRETE PILES DETAILS

SHEET 2 OF 3

KEEHI INTERCHANGE
F.A.I. PROJECT NO. I-HI-1(168):17
SCALE: AS SHOWN DATE:

SHEET No. Y-8 OF 11 SHEETS SD-11

Rev. 27 Jun 78

FED. ROAD DIST. NO.	STATE	FED. AID PROJ. NO.	FISCAL YEAR	SHEET NO.	TOTAL SHEETS
HAWAII	HAW.	I-HI-I(168):17	1982	140	145

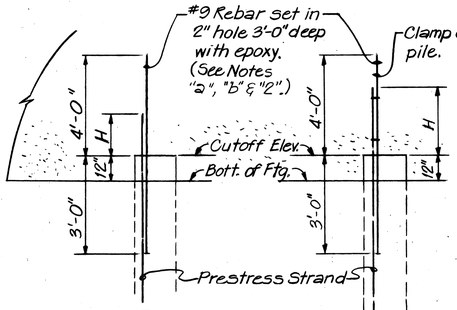

CASE ① H ≤ 2'-0"

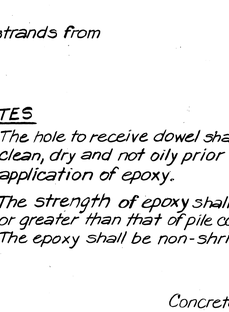

CASE ② 2'<H<4'-0"

NOTES

a. The hole to receive dowel shall be clean, dry and not oily prior to application of epoxy.

b. The strength of epoxy shall be equal or greater than that of pile concrete. The epoxy shall be non-shrink.

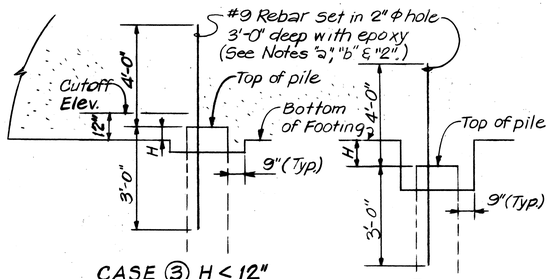

CASE ③ H < 12"
SEE DETAIL 'X'

CASE ④ 0<H<4'-0"
SEE DETAIL 'X'

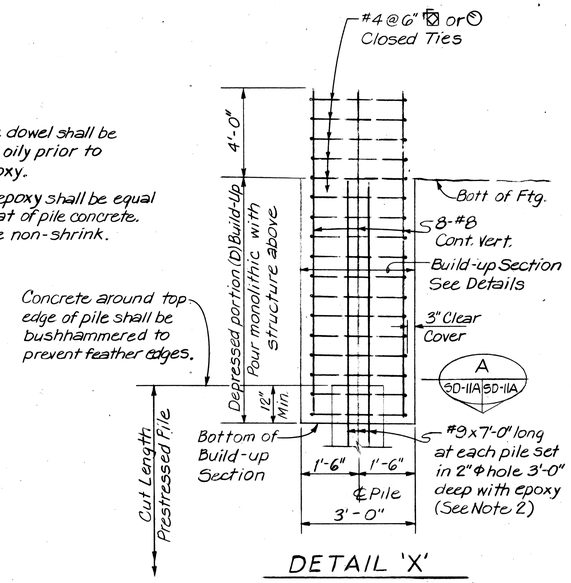

DETAIL 'X'
(WITHOUT DRIVING)

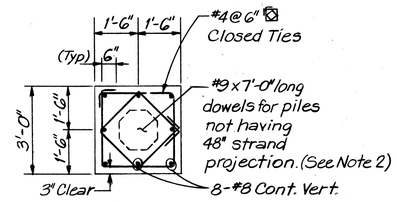

SQUARE BUILD-UP

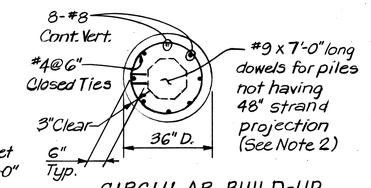

CIRCULAR BUILD-UP
SECTION A SD-11A SD-11A

NOTES:

1. Selection of pile build-up shall be determined by the Engineer. When height of depressed portion of footing (D) exceeds 5'-0" this alternative pile build-up shall not be allowed.
2. Use same number of rebars (ASTM A615 Grade 60) as number of Prestress strands.
3. Detail 'X' shall be used only for piles already driven to desired tip elevation.
4. Concrete in Detail 'X' shall be class A, same strength as footing.
5. Top of existing pile shall be roughened to 1/4" amplitude.
6. Circular section may be used instead of square section if approved by the Engineer.

ALTERNATIVE PILE BUILD-UP DETAILS

NOT TO SCALE

(NOTE: This Alternative Pile Build-Up shall not apply to Trestle Type Structures which have pile exposed above finished grade).

ORIGINAL PLAN		DATE
	SURVEY PLOTTED BY	
	DRAWN BY	
	TRACED BY	
NOTE BOOK	DESIGNED BY	
	QUANTITIES BY	
No.	CHECKED BY	

JOHN P. JOHNSON REGISTERED PROFESSIONAL ENGINEER No. 3647 HAWAII, U.S.A.

THIS WORK WAS PREPARED BY ME OR UNDER MY SUPERVISION.

John P. Johnson

STATE OF HAWAII
DEPARTMENT OF TRANSPORTATION
HIGHWAYS DIVISION

STANDARD DETAILS

PRESTRESSED CONCRETE PILES
DETAILS

SHEET 2A OF 3

KEEHI INTERCHANGE
F.A.I. PROJECT NO. I-HI-I (168):17
SCALE: AS SHOWN DATE: 8/17/81

SHEET No. Y-9 OF 11 SHEETS SD-11A

Contract #N5B 283A

FED. ROAD DIST. NO.	STATE	FED. AID PROJ. NO.	FISCAL YEAR	SHEET NO.	TOTAL SHEETS
HAWAII	HAW.	I-HI-I(168)17	1982	141	145

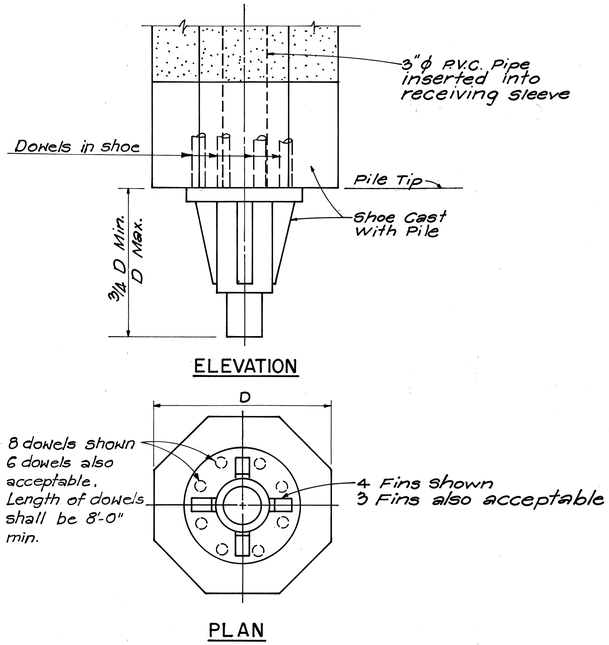

ROCK DRIVING SHOE
NOT TO SCALE

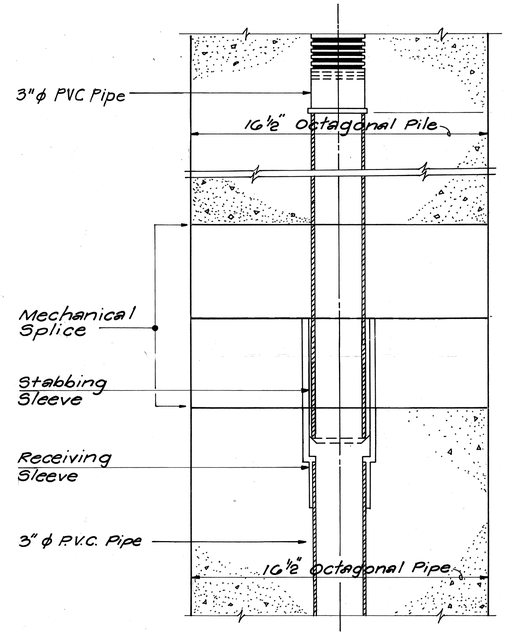

BETWEEN 16 1/2" OCT. PILES

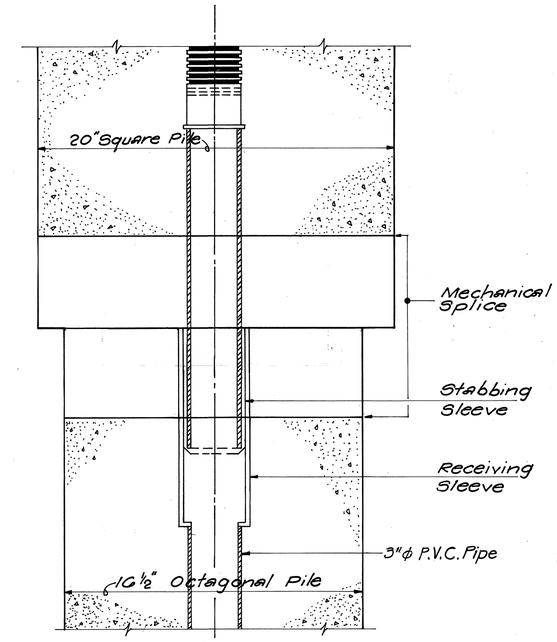

BETWEEN 20" SQ. PILE & 16 1/2" OCT. PILE

ARRANGEMENT OF PVC PIPE CONNECTIONS AT PILE SPLICE
SCALE: 3"=1'-0"

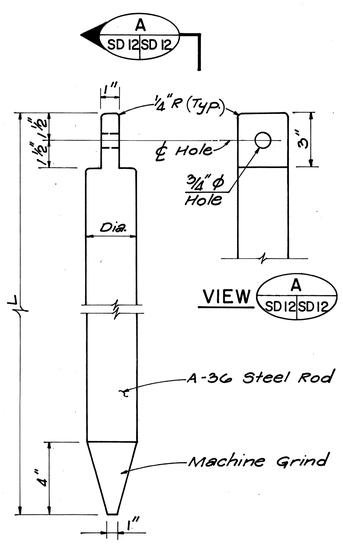

PLUMB BOB #1 #2 #3 & #4
SCALE: 3"=1'-0"

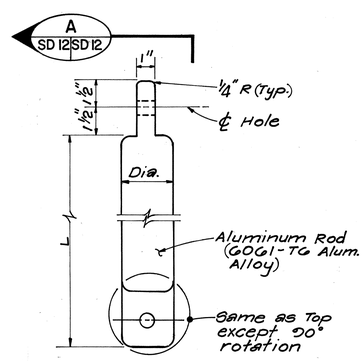

PLUMB BOB #5 & #6
SCALE: 3"=1'-0"

SIZE OF PLUMB BOBS			
PLUMB BOB	L	DIA.	
#1	11'-3"	2 3/4" ± 0.006"	
#2	8'-0"	2 3/4" ± 0.006"	
~~#3~~	~~9'-2"~~	~~4 3/8" ± 0.012"~~	N.I.C.
~~#4~~	~~6'-9"~~	~~4 3/8" ± 0.012"~~	N.I.C.
#5	12'-0"	2 3/4" ± 0.006"	
~~#6~~	~~12'-9"~~	~~4 3/8" ± 0.012"~~	N.I.C.

PLUMB BOB NOTES:

1. All sharp edges shall be rounded.
2. Allowable deviation from straight = 1/8"
3. Plumb Bobs shall be attached to a measuring tape with "foot" and "inch" marked graduations.
4. Plumb Bobs #1, #2, #3 & #4 shall be used at the driving site. Plumb Bobs #5 & #6 shall be used at the casting yard.

ORIGINAL PLAN | NOTE BOOK No. | SURVEY PLOTTED BY | DRAWN BY | TRACED BY | DESIGNED BY | QUANTITIES BY | CHECKED BY | DATE

JOHN P. JOHNSON REGISTERED PROFESSIONAL ENGINEER No. 3647 HAWAII, U.S.A.

THIS WORK WAS PREPARED BY ME OR UNDER MY SUPERVISION.
John P. Johnson

STATE OF HAWAII
DEPARTMENT OF TRANSPORTATION
HIGHWAYS DIVISION
STANDARD DETAILS

PRESTRESSED CONCRETE PILES DETAILS

SHEET 3 OF 3

KEEHI INTERCHANGE
F.A.I. PROJECT NO. I-HI-I (168):17
SCALE: AS SHOWN DATE: 8/17/81

SHEET No. Y-10 OF 11 SHEETS SD-12

FED. ROAD DIST. NO.	STATE	FED. AID PROJ. NO.	FISCAL YEAR	SHEET NO.	TOTAL SHEETS
HAWAII	HAW.	I-HI-1(168)17	1982	142	145

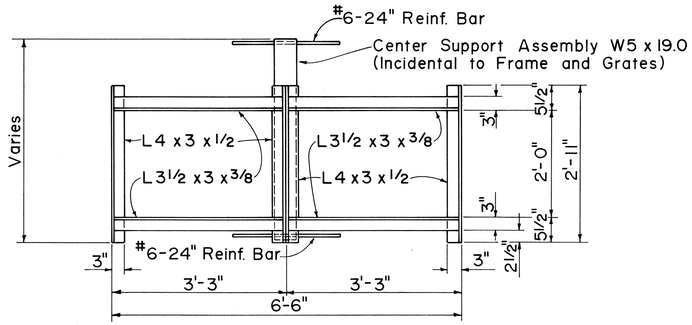

PLAN
(Two or More Grates)

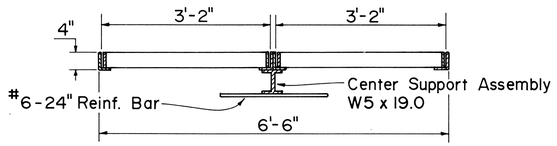

LONGITUDINAL SECTION
(Thru Frame & Grate)

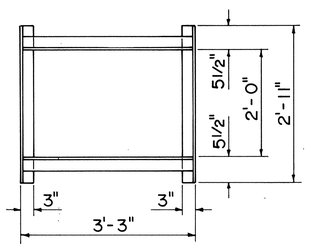

PLAN
(Single Grate)

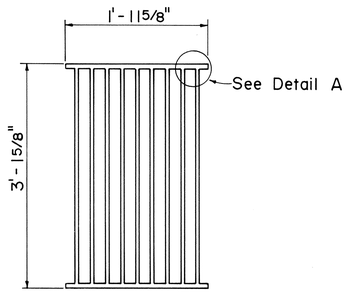

PLAN

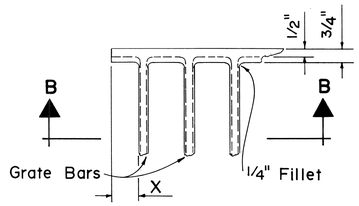

DETAIL A

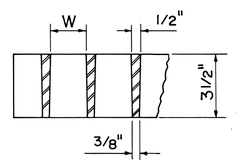

SECTION B-B

ALTERNATIVE CAST MALLEABLE IRON OR CAST STEEL GRATE

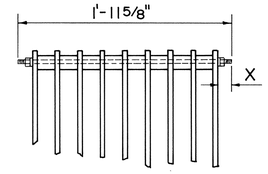

BOLTED END BLOCK

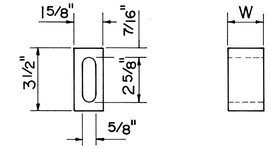

BAR SPACER

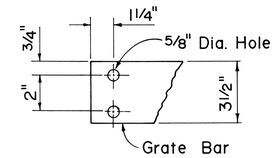

END OF BAR

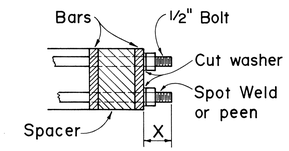

BOLTING DETAIL

ALTERNATIVE BOLTED GRATE

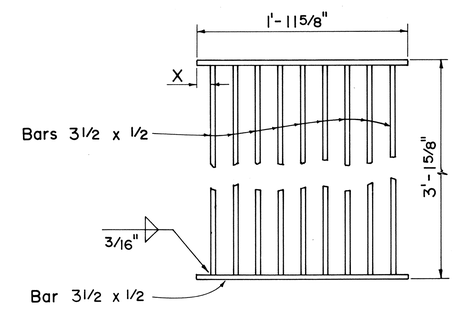

PLAN

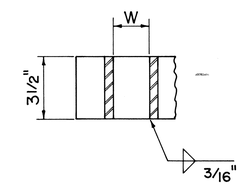

SECTION

ALTERNATIVE WELDED GRATE

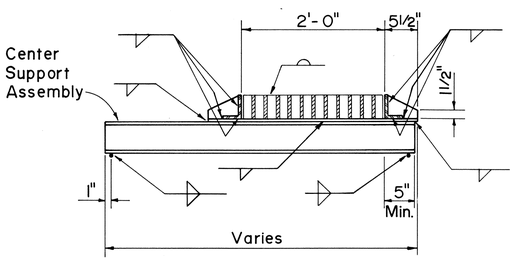

CROSS SECTION
(Thru Frame & Grate)

FRAME DETAILS

GENERAL NOTES

1. Contractor has the option of using cast malleable iron, cast steel, welded, or bolted grate.
2. All welds 3/8" unless otherwise noted.
3. Type A-9 – Use in locations off the roadbed on all types of highways.
4. Type A-12 – Use within the roadbed on all types of highways.

GRATE BAR SPACING TABLE			
TYPE	NO. BARS	CLEAR BAR SPACING-W	X
A-9	9	2"	1 9/16"
A-12	12	1 3/8"	1 1/4"

APPROVAL RECOMMENDED:
G. Yakano — 6-19-79
HYDRAULIC DESIGN ENGINEER — DATE

APPROVED:
Herbert Takeichi — 6-22-79
ASSISTANT CHIEF, ENGINEERING — DATE

NO.	REVISION	APPROVED BY	DATE
1.	Supersedes Sht. DH 7 approved 12-17-69	H.T.	6/22/79
2.	Revise standard nomenclature for rolled steel shapes.	H.T.	4/21/82

STATE OF HAWAII
DEPARTMENT OF TRANSPORTATION
HIGHWAYS DIVISION

STANDARD DETAILS

TYPE A-9 AND A-12
FRAMES AND GRATES

Not To Scale — Date: Dec. 1977

SHEET No. Y-11 OF 11 SHEETS DH 7

ORIGINAL PLAN	SURVEY PLOTTED BY	DATE
	DRAWN BY	"
	TRACED BY	"
NOTE BOOK	DESIGNED BY	"
No.	QUANTITIES BY	"
	CHECKED BY	"