FED. ROAD DIST. NO.	STATE	FED. AID PROJ. NO.	FISCAL YEAR	SHEET NO.	TOTAL SHEETS
HAWAII	HAW.	I-HI-1(133):17	1981	51	159

LEGEND

SYMBOLS	REPRESENTS	REFERENCE DETAIL	REFERENCE NOTE
32	EXISTING WOOD OR METAL LTG. STD. WITH LUMINAIRE I.D. Nº.		
PHASES FEEDER Nº 265 G2-CA			
	METAL LTG. STD. ON STRUCTURE (W/ANCHORAGE AND 250W. H.P.S. LUMINAIRE TYPE L2-W)	3/E4 4/E4 1/E6	
	METAL LTG. STD. ON GRADE (W/ FND. AND 250 W. H.P.S. LUMINAIRE TYPE L2-W)	3/E4, 4/E4, 2/E7 1/E5, 1/E6	
	RACEWAY RUN UNDERGROUND; LIGHTING SYSTEM, EXCEPT AS INDICATED		3/E1 9/E1
	RACEWAY RUN IN PARAPET; LIGHTING SYSTEM, EXCEPT AS SHOWN	2/E4	3/E1 THRU 6/E1
C	COMMUNICATIONS SYSTEM RACEWAY		3/E1 THRU 6/E1
	CAP AND MARK RACEWAY; END RACEWAY	3/E7	
	PULL BOX TYPE CC1, FOR LIGHTING SYSTEM	5/E4	
	PULL BOX TYPE CC4, FOR LIGHTING SYSTEM	5/E4	
B	PULL BOX CAST IRON (SIZE B, ETC.)	1/E1	
	METAL LTG. STD. ON STRUCTURE, TWIN (W/ ANCHORAGE AND 250W. H.P.S. LUMINAIRES W/ SHIELD, TYPE L2-W-S)	1/E4 4/E4 1/E6	

NOTE: ESTIMATED QUANTITY FOR LUMP SUM ITEMS WILL BE USED TO DETERMINE THE THEORETICAL UNIT PRICE AS DEFINED IN SUB-SECTION 104.02(B) OF THE STANDARD SPEC.

ELECTRICAL

ITEM Nº	ITEM	UNIT	QUANTITIES HIGHWAY	QUANTITIES BRIDGE
622.7001	METAL LIGHTING STANDARD ON STRUCTURE	EA		7
622.7002	METAL LIGHTING STANDARD ON GRADE	EA	3	
622.7005	UNDERGROUND RACEWAY, LTG. SYSTEM	LS	2250'	
622.7008	WIRE, 600 VOLT, 1/C, #6	LS	4500'	2700'
622.7009	WIRE, 600 VOLT, 1/C, #4	LS	900'	2700'
622.7013	PULLBOX, CAST IRON	LS		12
622.7016	PULL BOX, TYPE CC, LIGHTING SYSTEM	EA	7	
622.7024	RACEWAY ON STRUCTURE	LS		2000'
622.7028	METAL LIGHTING STANDARD ON STR., TWIN	EA		2
622.7029	MISCELLANEOUS ELECTRICAL APPURTENANCES	LS	1	

GENERAL NOTES APPLYING TO ALL ELECTRICAL SHEETS

1/E1. ON PLAN SHEETS EXISTING FACILITIES ARE DESIGNATED BY NOTATION OR BY THE LETTER (E) IN CONJUNCTION WITH THE SYMBOL.

2/E1. DETAIL AND NOTES ARE NUMBERED AS FOLLOWS:
DETAIL OR NOTE NUMBER
1/E3 ← ELECTRICAL SHEET ON WHICH DETAIL OR NOTE APPEARS.

3/E1. PROVIDE UNDERGROUND RACEWAYS AND RACEWAYS RUN IN STRUCTURE IN 2" SIZE, EXCEPT AS NOTED, AND OF TYPE NMR, EXCEPT AS NOTED. PROVIDE 1 INCH AND SMALLER SIZE RACEWAYS OF TYPE RGS.

4/E1. FOR A DISTANCE OF 10 FEET ON BOTH SIDES OF ℄ OF BEARING AT STRUCTURE ABUTMENTS PROVIDE RACEWAYS OF TYPE RGS.

5/E1. PROVIDE AN EXPANSION-DEFLECTION FITTING IN ALL RACEWAYS AT BRIDGE EXPANSION JOINTS.

6/E1. IN TYPE NMR RACEWAY RUN IN STRUCTURE, PROVIDE A#6 BARE COPPER CABLE AND BOND ALL LTG. STANDARDS, PULL BOXES, AND METAL RACEWAY SEGMENTS TO IT. CONNECT CABLE TO GND ROD IN PULLBOX NOTED ON PLAN.

7/E1. EXTEND ALL PHASES OF FEEDER TERMINATION TO POINT INDICATED ON PLAN.

8/E1. NONE

9/E1. PROVIDE UNDERGROUND RACEWAYS WHICH RUN ABOVE PIER FOOTINGS IN TYPE RGS TO POINTS 5 FEET BEYOND FOOTING.

CAST IRON PULLBOXES IN STRUCTURE

PLAN SYMBOL	SIZE (INCHES) L X W X D	GENERAL APPLICATION
A	16 X 6 X 4	#4 LTG. FEEDERS
B	8 X 6 X 4	#6 LTG. FEEDERS, COMM. LATERALS

NOTE: PROVIDE ALL BOXES WITH INSIDE RECESSED FLANGE.

DETAIL 1/E1 - PULLBOX SCHEDULE

LIST OF ABBREVIATIONS

C	RACEWAY (TYPE AND SIZE AS INDICATED)
NMR	NON-METALLIC RACEWAY (TYPE PVC OR CAD)
RGS	RIGID GALVANIZED STEEL CONDUIT
RAL	RIGID ALUMINUM CONDUIT
PVC	POLYVYNILCHLORIDE CONDUIT
CAD	CEMENT ASBESTOS DUCT
LTG	LIGHTING
LTG STD	LIGHTING STANDARD
BKT	BRACKET ARM
FND	FOUNDATION
CKT	CIRCUIT
FDR	FEEDER (OR BRANCH THEREOF)
GND	GROUND
N.T.S.	NOT TO SCALE
N.I.C.	NOT IN CONTACT
FUT.	FUTURE
(E)	EXISTING
CONC.	CONCRETE
H.P.S.	HIGH PRESSURE SODIUM LAMP
HG	MERCURY VAPOR LAMP
E.T.W.	EDGE OF TRAVELED WAY
P.B.	PULL BOX
A.N.S.I.	AMERICAN NATIONAL STANDARDS INSTITUTE

M. A. Manzalowey

STATE OF HAWAII
DEPARTMENT OF TRANSPORTATION
HIGHWAYS DIVISION

ELECTRICAL PLAN
LEGEND, NOTES, DETAILS
INTERSTATE ROUTE H-1
PROJECT NO. I-H1-1(133):17

SCALE: NONE DATE: 4/30/81

SHEET No. E1 OF E7 SHEETS

ORIGINAL PLAN — SURVEY PLOTTED BY ___ DATE ___ DRAWN BY ___ TRACED BY ___ DESIGNED BY ___ QUANTITIES BY ___ CHECKED BY ___ NOTE BOOK ___ No. ___

FED. ROAD DIST. NO.	STATE	FED. AID PROJ. NO.	FISCAL YEAR	SHEET NO.	TOTAL SHEETS
HAWAII	HAW.	I-H1-1(133)17	1981	52	159

NOTES:
1/E2. NONE.
2/E2. REMOVE EXISTING WOODPOLE LIGHTING STANDARDS 11, 12R, 14RR/15RR, 16RR/17RR, 18RR/19RR, 32 & 37RR AND AERIAL FEEDER. REINSTALL FEEDER AND STANDARDS AS Nos 11R, 12RR 16RRR & 18RRR AND STOCKPILE BALANCE. DO NOT BEGIN THIS WORK MORE THAN 21 DAYS BEFORE THE CHANGE TO TRAFFIC PATTERN B IS MADE. SEE DETAILS 4/E7, 5/E7.
3/E2. CONNECT TO RACEWAY CAPPED BY OTHERS.
4/E2. CAP RACEWAY FOR EXTENSION BY OTHERS.
5/E2. TERMINATE FEEDER IN THIS PULL BOX.
6/E2. FOR LATERALLY-FED LTG. STD. PROVIDE FEEDER TAP PER DETAIL 4/E4.
7/E2. RUN FEEDER 'B' IN EXISTING RACEWAY IN VIADUCT PARAPET AND PIER LEG. SEE DETAILS 1/E7, 1/E3.

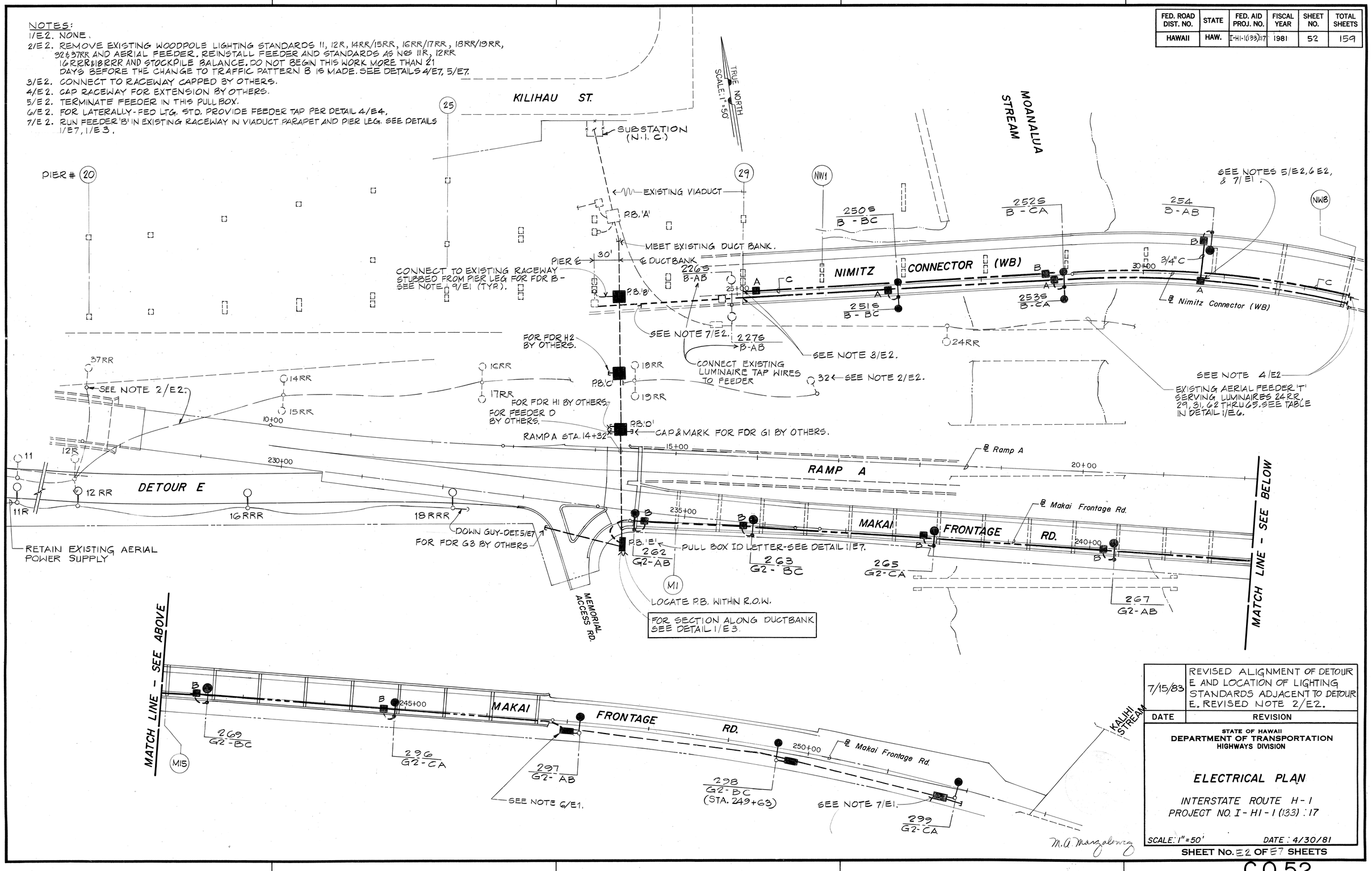

DATE	REVISION
7/15/83	REVISED ALIGNMENT OF DETOUR E AND LOCATION OF LIGHTING STANDARDS ADJACENT TO DETOUR E. REVISED NOTE 2/E2.

STATE OF HAWAII
DEPARTMENT OF TRANSPORTATION
HIGHWAYS DIVISION

ELECTRICAL PLAN

INTERSTATE ROUTE H-1
PROJECT NO. I-H1-1(133):17

SCALE: 1" = 50' DATE: 4/30/81

SHEET No. E2 OF E7 SHEETS

ORIGINAL PLAN	SURVEY PLOTTED BY	DATE
	DRAWN BY	"
	TRACED BY	"
NOTE BOOK	DESIGNED BY	"
	QUANTITIES BY	"
No.	CHECKED BY	"

C.0.52

FED. ROAD DIST. NO.	STATE	FED. AID PROJ. NO.	FISCAL YEAR	SHEET NO.	TOTAL SHEETS
HAWAII	HAW.	I-HI-1(133):17	1981	53	159

NOTE: FEATURES BY OTHERS ARE SHOWN DASHED.

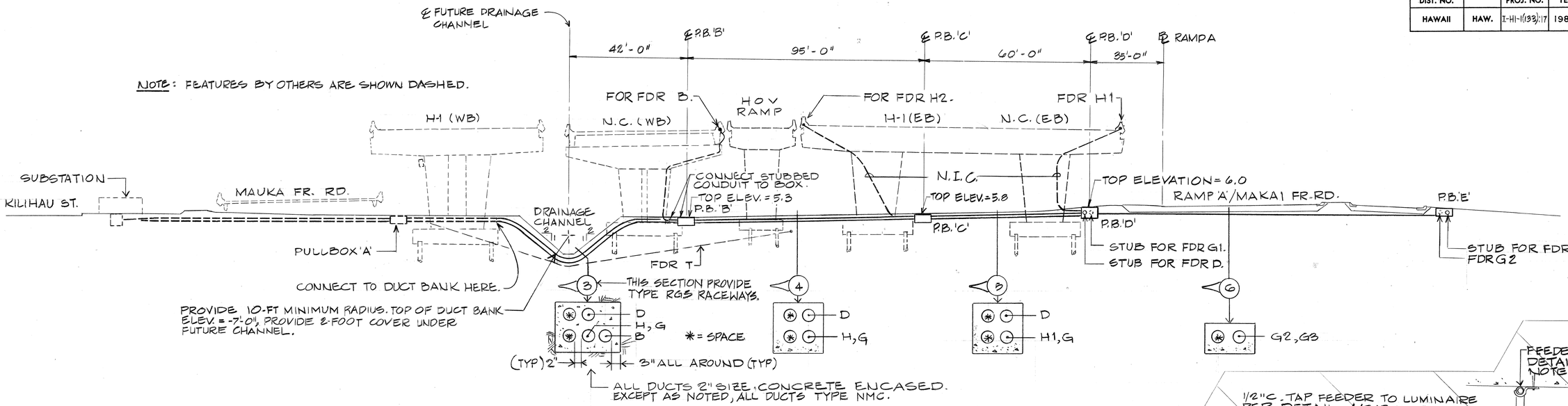

DETAIL 1/E3 - SECTION AT PIER LINE 27 LOOKING EAST 1" = 20'

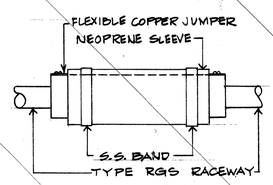

DETAIL 2/E11
EXPANSION-DEFLECTION FITTING

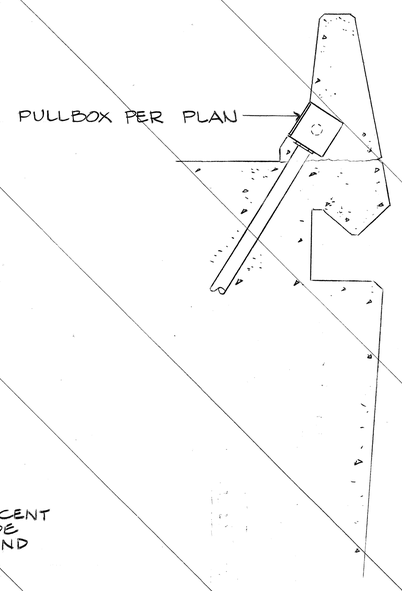

N.I.C.

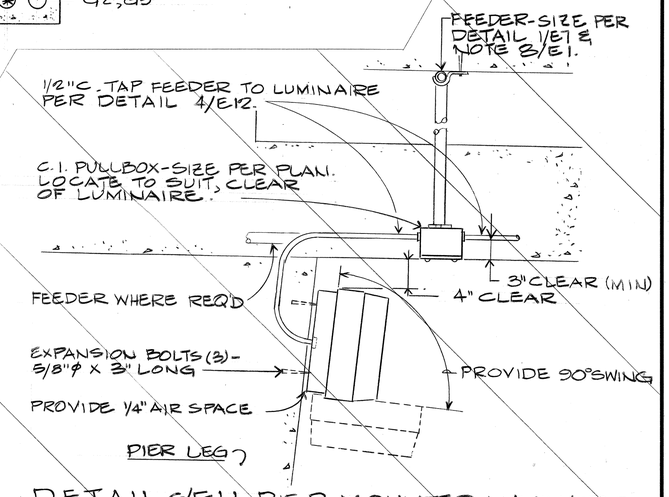

DETAIL 6/E11 PIER-MOUNTED LUMINAIRE

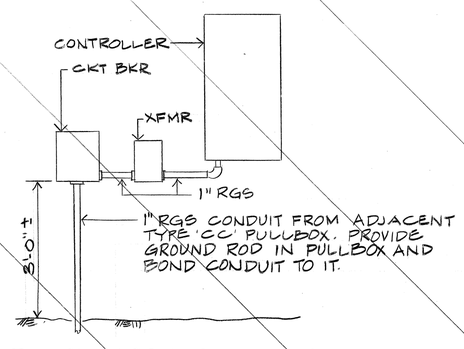

INSTALLATION ON PIER FACE

DETAIL 3/E11
SERVICE TO IRRIGATION CONTROLLER

DETAIL 4/E11

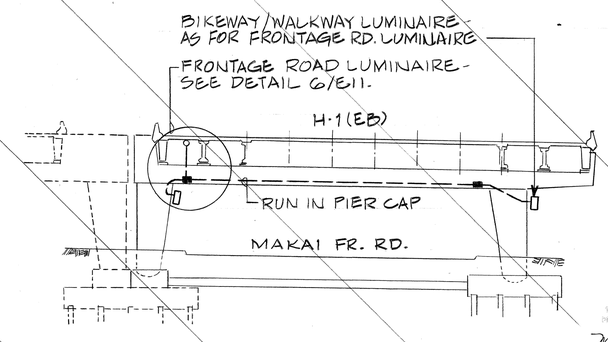

DETAIL 5/E11 WEST ELEVATION OF PIER 10
(PIERS 6, 8, 12, & 14 SIMILAR)

M. A. MARSZALOWICZ REGISTERED PROFESSIONAL ENGINEER No. 2360 HAWAII

THIS DOCUMENT WAS PREPARED BY ME OR UNDER MY SUPERVISION

M. A. Marszalowicz

STATE OF HAWAII
DEPARTMENT OF TRANSPORTATION
HIGHWAYS DIVISION

ELECTRICAL PLAN

DETAILS — PART III

INTERSTATE ROUTE H-1
PROJECT NO. I-HI-1 (133):17

SCALE: AS NOTED DATE: 4/30/81

SHEET No. E3 OF E7 SHEETS

ORIGINAL PLAN		DATE
	SURVEY PLOTTED BY	
	DRAWN BY	
	TRACED BY	
NOTE BOOK	DESIGNED BY	
	QUANTITIES BY	
No.	CHECKED BY	

PRINTED ON NO. 1000H CLEARPRINT

FED. ROAD DIST. NO.	STATE	FED. AID PROJ. NO.	FISCAL YEAR	SHEET NO.	TOTAL SHEETS
HAWAII	HAW.	I-HI-1(133):17	1981	54	159

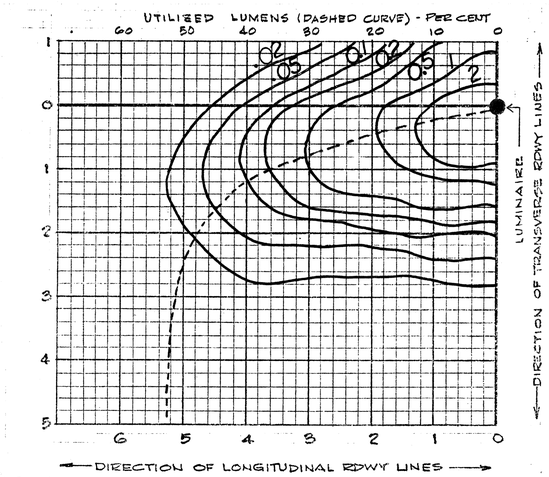

ISOFOOTCANDLE & UTILIZATION CURVES
LUMINAIRE TYPE
#L 2-W-S

DATA BASED ON 250-WATT HPS 25,500 LUMEN LAMP @ 30' MTG.
PROVIDE A.N.S.I. LAMP DESIGNATION S50VA-250/S.

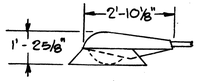

WIDTH = 1'-2"
NOTE: FOR 30,000-LUMEN LAMP MULTIPLY FOOTCANDLE VALUES BY 1.18.

DETAIL 1/E4 SEE NOTES 1,2,3/E4

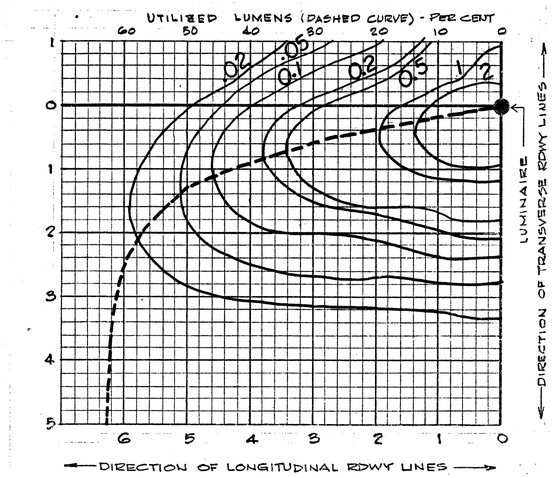

ISOFOOTCANDLE & UTILIZATION CURVES
LUMINAIRE TYPE
#L 2-W

DATA BASED ON 250-WATT HPS 25,000 LUMEN LAMP @ 30' MTG.
PROVIDE A.N.S.I. LAMP DESIGNATION S50VA-250/S.

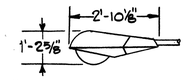

WIDTH = 1'-2"
NOTE: FOR 30,000-LUMEN LAMP MULTIPLY FOOTCANDLE VALUES BY 1.20.

DETAIL 3/E4 SEE NOTES 1,2,3/E4.

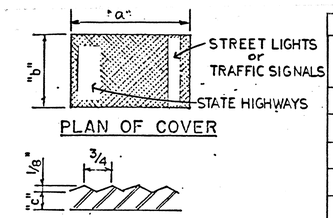

PLAN OF COVER

SECTION THROUGH COVER

Frame & cover size-inches				
DIM	TYPE CC1	TYPE CC2	TYPE CC3	TYPE CC4
"a"	19 3/4	23 1/2	30	30 3/8*
"b"	12	15 3/4	20	36 3/4
"c"	1/2	1/2	5/8	5/8 CK PL
"d"	22 1/2	26 1/4	33 3/16	64
"e"	14 3/4	18 1/2	23 3/16	40
"f"	1	1	2	2
"g"	1 1/4	1 1/4	1 1/2	1 1/2
"h"	1/2	1/2	1 3/8	1 3/8

*TWO PIECES

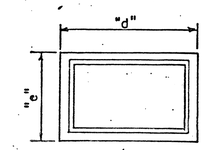

PLAN OF FRAME

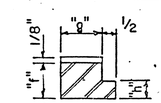

SECTION THROUGH FRAME

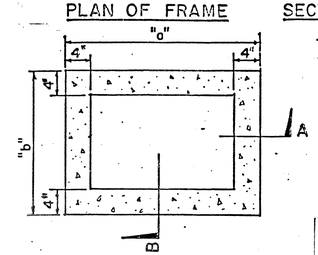

PLAN OF PULLBOX

Pullbox size-inches				
DIM	TYPE CC1	TYPE CC2	TYPE CC3	TYPE CC4
"a"	28	32	40	68
"b"	19	24	28	44
"c"	18	24	24	36

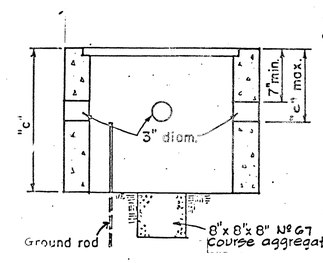

SECTION A-A

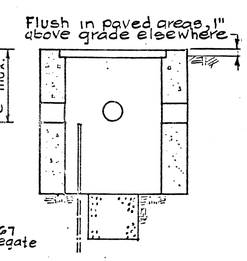

SECTION B-B

DETAIL 5/E4
PULL BOX TYPES CC

NOTES:

1/E4. INDICATED DIMENSIONS ARE MANDATORY FOR LUMINAIRES.

2/E4. ISOFOOTCANDLE DISTRIBUTION IN THE RIGHT HAND QUADRANT IS AS SHOWN FOR LEFT QUADRANT.

3/E4. LIGHT DISTRIBUTION ABOVE THE HORIZONTAL SHALL NOT EXCEED 1/2% OF BARE BULB LUMENS ON THE STREET AND 1% ON THE HOUSE SIDE.

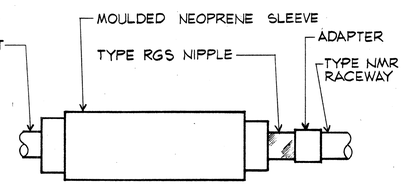

DETAIL 2/E4
EXPANSION - DEFLECTION FITTING

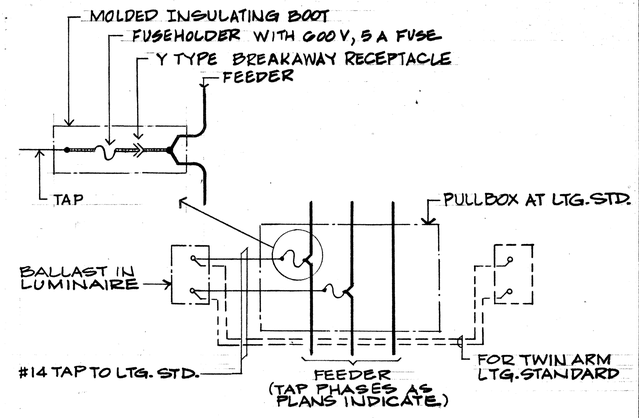

DETAIL 4/E4
TAP TO LTG. STD. LUMINAIRE

M. A. MARSZALOWICZ REGISTERED PROFESSIONAL ENGINEER

M.A. Marszalowicz

STATE OF HAWAII
DEPARTMENT OF TRANSPORTATION
HIGHWAYS DIVISION

ELECTRICAL PLAN
DETAILS — PART II

INTERSTATE ROUTE H-1
PROJECT NO. I-HI-1(133):17

SCALE: NONE DATE: 4/30/81

SHEET No. E4 OF E7 SHEETS

ORIGINAL PLAN	SURVEY PLOTTED BY	DATE
	DRAWN BY	
	TRACED BY	
NOTE BOOK	DESIGNED BY	
	QUANTITIES BY	
No.	CHECKED BY	

PRINTED ON No. 1000H CLEARPRINT

FED. ROAD DIST. NO.	STATE	FED. AID PROJ. NO.	FISCAL YEAR	SHEET NO.	TOTAL SHEETS
HAWAII	HAW.	I-HI-1(133):17	1981	55	159

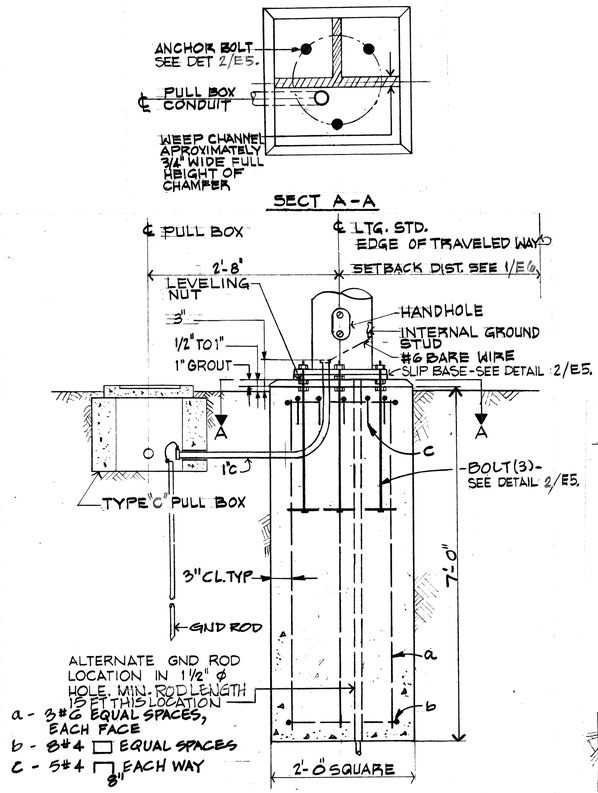

TYPE GS/SB
(GOOD SOIL/SLIP BASE)

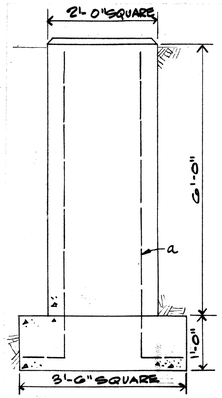

TYPE PS/SB (POOR SOIL/SLIP BASE)
EXCEPT AS SHOWN SIMILAR TO TYPE GS/SB

DETAIL 1/E5
LIGHTING STANDARD FOUNDATION SLIP BASE

NOTES:

1. PLATES SHALL CONFORM TO A.S.T.M. A-36, EXCEPT AS NOTED.
2. CAST OPTION SHALL CONFORM TO A.S.T.M. A-27 GRADE 70-40. ALTERNATIVE DETAILS APPROVED BY THE ENGINEER MAY BE SUBSTITUTED FOR THE ARM CONNECTIONS SHOWN.
3. TORQUE 7/8" H.S. BOLTS TO 84 FOOT-POUNDS.
4. 7/8" HIGH STRENGTH ANCHOR BARS, WRENCH TIGHTEN, TORQUE REQUIREMENT WAIVED. FABRICATORS ELECTING TO USE LARGER MINIMUM ARM DIAMETERS MUST ADJUST THE DETAILS AS REQUIRED TO PERMIT SOLID SEATING OF CAP SCREWS. IN LIEU OF THE TORQUE REQUIREMENTS FOR H.S. BOLTS, CAP SCREWS SHALL BE TIGHTENED BY THE TURN-OF-NUT METHOD 1/6 TURN FROM SNUG TIGHT CONDITION. NO WASHER WILL BE REQUIRED.
5. H.S. BOLTS, FLAT WASHERS AND NUTS AND WASHERS FOR H.S. ANCHOR BARS SHALL CONFORM TO A.S.T.M. A-325.

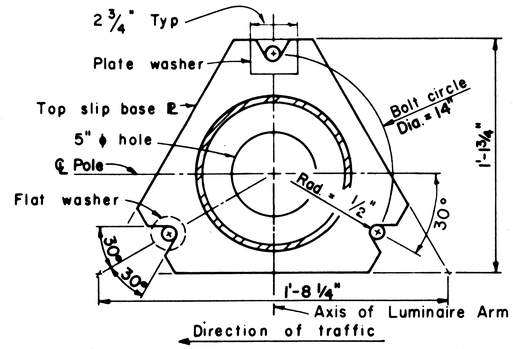

PLAN- TOP PLATE

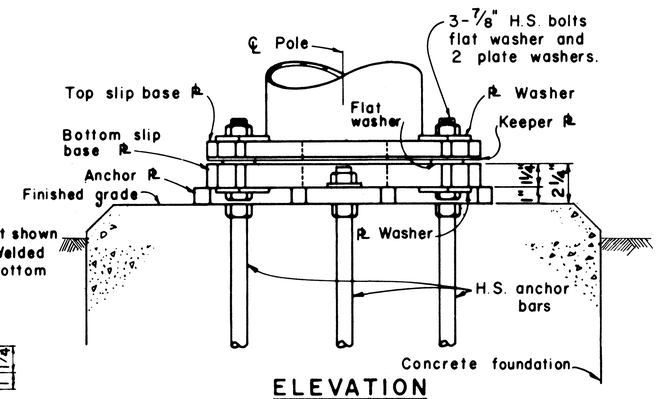

ELEVATION

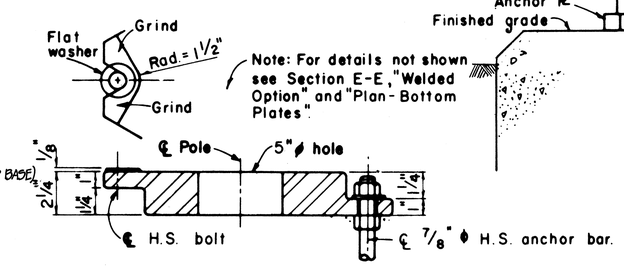

CAST OPTION

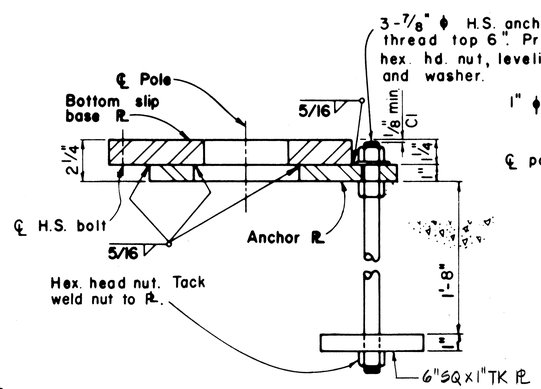

WELDED OPTION

SECTION E-E

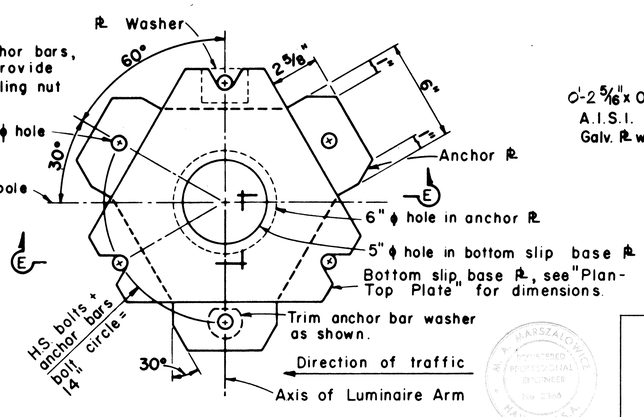

PLAN - BOTTOM PLATES

SLIP BASE PLATE DETAILS

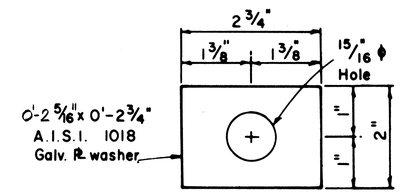

PLATE WASHER

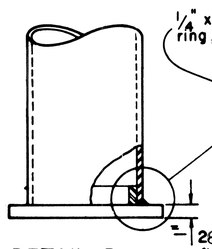

DETAIL B

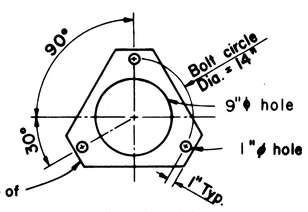

28 ga. keeper ℞, place on top of flat washer. A.S.T.M. A526, 125 Commercial.

KEEPER PLATE

DETAIL 2/E5 - LIGHTING STANDARD SLIP BASE DETAILS

STATE OF HAWAII
DEPARTMENT OF TRANSPORTATION
HIGHWAYS DIVISION

ELECTRICAL PLAN

DETAILS — PART II

INTERSTATE ROUTE H-1
PROJECT NO. I-HI-1 (133):17

SCALE: AS NOTED *DATE: 4/30/81*

SHEET No. E5 OF E7 SHEETS

DRAWN BY
TRACED BY
DESIGNED BY
QUANTITIES BY
CHECKED BY
NOTE BOOK
No.

FED. ROAD DIST. NO.	STATE	FED. AID PROJ. NO.	FISCAL YEAR	SHEET NO.	TOTAL SHEETS
HAWAII	HAW.	I-HI-1(33):17	1981	56	159

LIGHTING STANDARD DATA

LUMINAIRE Nº EX'IST'G	LUMINAIRE Nº THIS CONT.	BKT ARM	ON STRUCTURE DECK	ON STRUCTURE PARAPET	ON GRADE – FND. TYPE GS/SB	PS/SB	PG/PB	SETBACK DISTANCE	MTG. HT.	TRAFFIC PATTERN (A)	(B)				NOTE	FEEDER
	2505	15' TWIN		X					45 FT.						4	B
	2515	15'		↓					↓						↓	↓
	2525	15' TWIN														
	2535	15'														
	254	15'		↓											↓	↓
	262	8'		X							V					G2
	268	8'		X							V					G2
	265	8'		X							V					G2
	267	8'		X							V					G2
	269	8'		X							V					G2
	296	8'		X							V					G2
	297	10'			X			12'			V					G2
	298	10'			X			12'			V					G2
	299	10'					X	14'			V					G2
12R											V					
14RR/15RR										V					5	
16RR/17RR										V					↓	
18RR/19RR										V						
32										V						
37RR										V	V					
	16RRR										V				5	
	18RRR										V				5	
~~24RR & 29 & 31 & 62 THRU 65~~											~~R~~ ↓				~~3~~ ↓	

FOOTNOTES TO TABLE

1. BRACKET ARM RISE IS SHOWN FOR 15-FT ARM, OTHERS ARE PROPORTIONAL.
2. "V" DENOTES LUMINAIRE IS TO BE OPERATIONAL FOR THE INDICATED TRAFFIC PATTERN.
3. ~~"R" DENOTES LUMINAIRE IS TO BE REMOVED AT ON SET OF THE INDICATED TRAFFIC PATTERN.~~
4. TEST, THEN REMOVE FEEDER FUSES AT SUBSTATION.
5. SEE NOTE 2/E2.

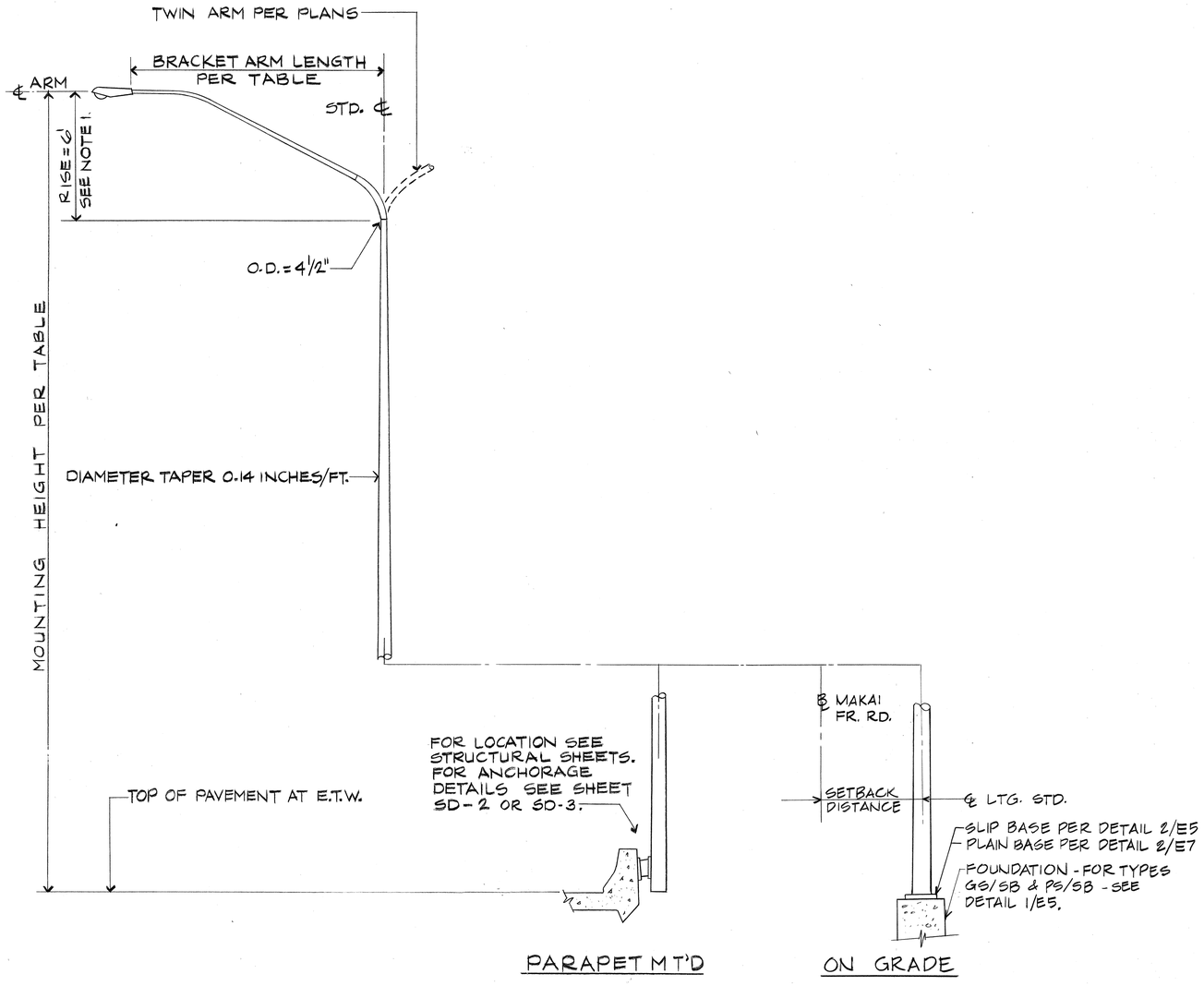

DETAIL 1/E6 METAL LIGHTING STANDARD

SURVEY PLOTTED BY	DATE
DRAWN BY	
TRACED BY	
DESIGNED BY	
QUANTITIES BY	
CHECKED BY	
ORIGINAL PLAN	
NOTE BOOK	
No.	

M.A. Manzolovitz

STATE OF HAWAII
DEPARTMENT OF TRANSPORTATION
HIGHWAYS DIVISION

ELECTRICAL PLAN

DETAILS – PART I

INTERSTATE ROUTE H-1
PROJECT NO. I-HI-1(133):17

SCALE: NONE DATE: 4/30/81

SHEET No. E6 OF E7 SHEETS

FED. ROAD DIST. NO.	STATE	FED. AID PROJ. NO.	FISCAL YEAR	SHEET NO.	TOTAL SHEETS
HAWAII	HAW.	I-HI-1(133):17	1981	57	159

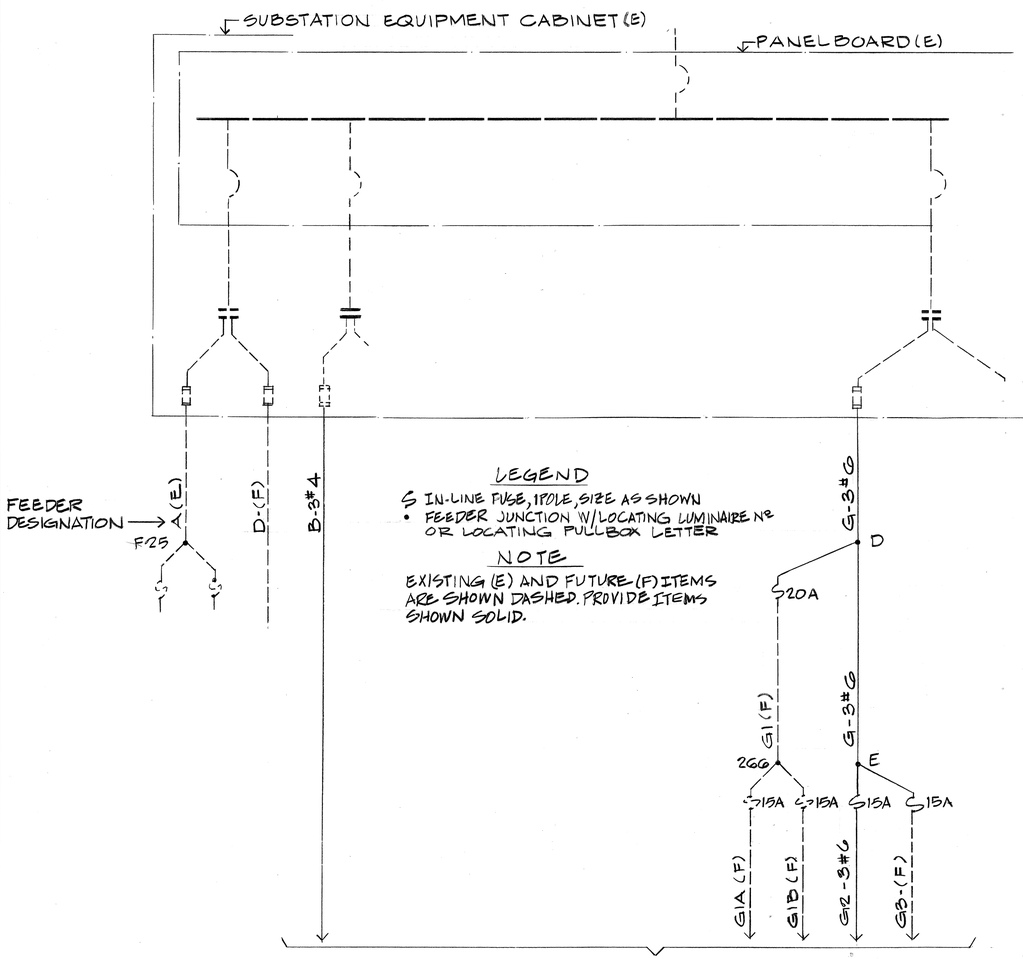

LEGEND

S IN-LINE FUSE, 1 POLE, SIZE AS SHOWN

• FEEDER JUNCTION W/LOCATING LUMINAIRE Nº OR LOCATING PULLBOX LETTER

NOTE

EXISTING (E) AND FUTURE (F) ITEMS ARE SHOWN DASHED. PROVIDE ITEMS SHOWN SOLID.

DETAIL 1/E7 ONE LINE DIAGRAM

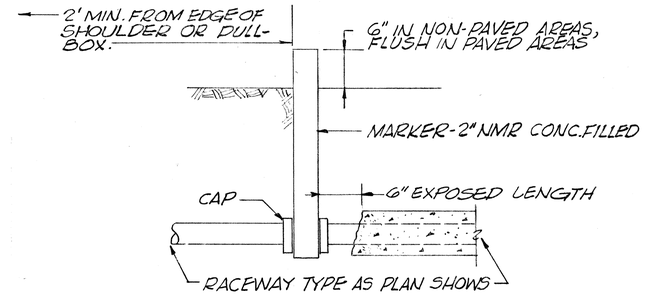

DETAIL 3/E7
CAP & MARK RACEWAY

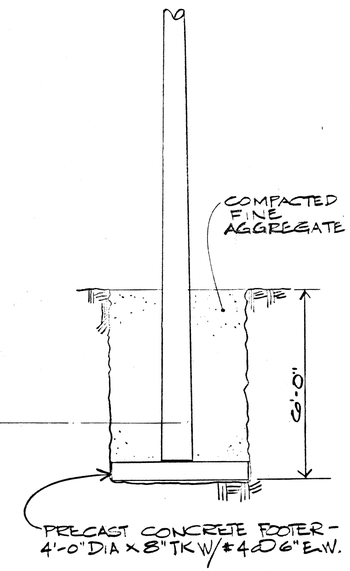

DETAIL 4/E7
WOOD LTG. STD. INSTALLATION

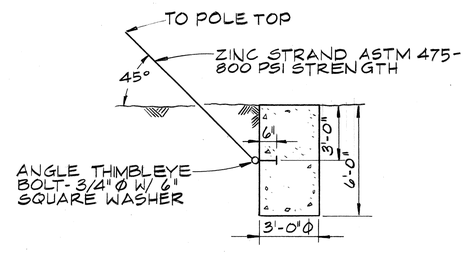

DETAIL 5/E7
WOOD POLE DOWN GUY

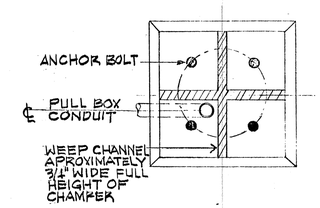

SECTION A-A
FOUNDATION PLAN

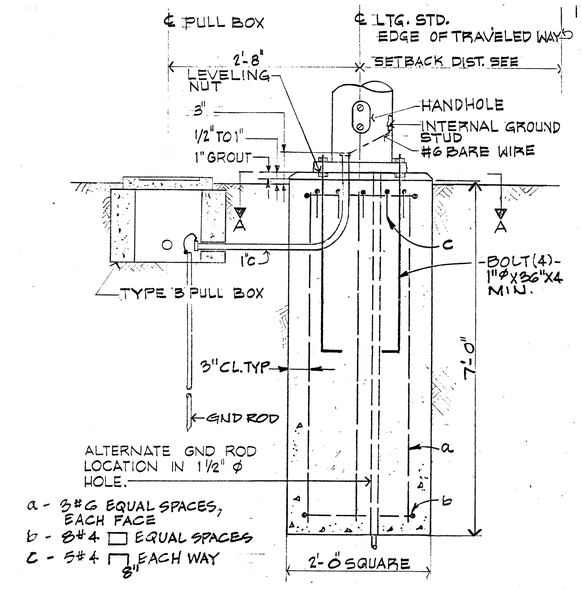

TYPE GS/PB

DETAIL 2/E7
LIGHTING STANDARD FOUNDATION PLAIN BASE

ORIGINAL PLAN	SURVEY PLOTTED BY	DATE
	DRAWN BY	
	TRACED BY	
NOTE BOOK	DESIGNED BY	
	QUANTITIES BY	
No.	CHECKED BY	

M. A. Marszalowicz

STATE OF HAWAII
DEPARTMENT OF TRANSPORTATION
HIGHWAYS DIVISION

ELECTRICAL PLAN

FEEDER DIAGRAM

INTERSTATE ROUTE H-1
PROJECT NO. I-HI-1 (133).17

SCALE: NONE DATE: 4/30/81

SHEET No. E7 OF E7 SHEETS