FED. ROAD DIST. NO.	STATE	FED. AID PROJ. NO.	FISCAL YEAR	SHEET NO.	TOTAL SHEETS
HAWAII	HAW.	I-H1-1(157):24	1979	68	146

INDEX TO DRAWINGS

STANDARD DETAILS

1.	NOTES AND MISCELLANEOUS DETAILS	DB-100
2.	CONCRETE BOX GIRDER	DB-101-1
3.	CONCRETE BOX GIRDER	DB-101-2
4.	CONCRETE BOX GIRDER	DB-101-3
5.	PRESTRESSED CONCRETE PILES	DB-300-1
6.	PRESTRESSED CONCRETE PILES	DB-300-2

SYMBOLS

SECTION LETTER OR DETAIL NUMBER

SHEET WHERE DETAIL OR SECTION IS SHOWN

16-1/2" OCTAGONAL PILES (TYPE I)

ABBREVIATIONS

AASHTO - THE AMERICAN ASSOCIATION OF STATE HIGHWAY AND TRANSPORTATION OFFICIALS
ABUT. -- ABUTMENT
ADD. --- ADDED
ADJ. --- ADJACENT
ALT. --- ALTERNATE
∠ ----- ANGLES
APPROX.- APPROXIMATE
ARCH. -- ARCHITECTURAL
ASTM --- THE AMERICAN SOCIETY FOR TESTING & MATERIALS
@ ------ AT

BAL. --- BALANCE
℄ ----- BASE LINE
BMS. --- BEAMS
BRG. --- BEARING
BTWN. -- BETWEEN
BLKS. -- BLOCKS
BOT. --- BOTTOM
B.F. --- BOTH FACE

℄ ------ CENTER LINE
CL,CLR - CLEAR
CONC. -- CONCRETE
COL. --- COLUMN
CONN. -- CONNECTION
CONST. - CONSTRUCTION
C.J. --- CONSTRUCTION JOINT
CONT. -- CONTINUOUS
C.Y. --- CUBIC YARDS

D ------ DEPTH
DETS. -- DETAILS
DIA. --- DIAMETER
DIAG. -- DIAGONAL
DIM.---- DIMENSION

DBL. --- DOUBLE
DN. ---- DOWN
DRWGS. - DRAWINGS

EA. ---- EACH
E.F. --- EACH FACE
E.W. --- EACH WAY
EL, ELEV. -- ELEVATION
ENGR. -- ENGINEER
EQ. ---- EQUAL
EXIST. - EXISTING
EXP. --- EXPANSION
EXT. --- EXTERIOR

FIN. --- FINISH
FTGS. -- FOOTINGS
FOUND. - FOUNDATION

GALV. -- GALVANIZED
GA. ---- GAUGE
GRD. --- GRADE OR GROUND

HECO - HAWAIIAN ELECTRIC COMPANY
HWY -- HIGHWAY
HORIZ.- HORIZONTAL

K ---- KIPS

LBS. - POUNDS
LT., L - LEFT
L.F. - LINEAR FOOT
LG. -- LONG
LONGIT. - LONGITUDINAL
L.S. - LUMP SUM

MIN. - MINIMUM
MISC.- MISCELLANEOUS
MAX. - MAXIMUM

NO. -- NUMBER
N.T.S. - NOT TO SCALE

O.C. - ON CENTER
PL. -- PLATE
P.S.F. - POUND PER SQUARE FOOT
P.S.I. - POUND PER SQUARE INCH
P.T. - POST-TENSION

RAD., R. - RADIUS
RAILG - RAILING
REF. - REFERENCE
REINF. - REINFORCEMENT
REM. - REMAINDER
RET. - RETAINING
R.W. - RETAINING WALL
REQD. - REQUIRED
RT., R. - RIGHT
RD. -- ROAD

SCHED. - SCHEDULE
SECT. -- SECTION
SHT. --- SHEET

SIM. -- SIMILAR
SPA., SPCS. - SPACES
SPECS. - SPECIFICATIONS
STA. -- STATION
STD. -- STANDARD
STRP. - STIRRUPS
STL. -- STEEL
STRUCT. - STRUCTURAL
SYMM. - SYMMETRICAL

T.P. -- TEST PIT
T&B --- TOP AND BOTTOM
T.F.E.- POLYTETRAFLUORETHYLENE
TYP. -- TYPICAL

VERT. - VERTICAL

WATERPRFG. - WATERPROOFING
W. ---- WIDTH
W/ ---- WITH
W.P. -- WORK POINT

ESTIMATED QUANTITIES

ITEM NO.	ITEM	UNIT	QUANTITIES
202.0442	CONCRETE REMOVAL & PREPARATION OF EXISTING ABUTMENT	L.S.	1
206.5000	STRUCTURE EXCAVATION FOR RETAINING WALLS	C.Y.	520
206.6000	STRUCTURE EXCAVATION FOR BRIDGES	C.Y.	1,670
206.7000	STRUCTURE BACKFILL	C.Y.	990
206.7200	STRUCTURE BACKFILL FOR BRIDGE ABUTMENTS, WINGWALLS AND RETAINING WALLS	C.Y.	850
206.8000	FILTER MATERIAL	C.Y.	80
501.0110	STRUCTURAL STEEL FOR H1-K BRIDGE	LBS.	14,620
503.1051	CONCRETE IN RETAINING WALLS	L.S.	(241 C.Y.)
503.1053	CONCRETE IN RETAINING WALL FOOTINGS	L.S.	(216 C.Y.)
503.1090	CONCRETE IN H1-K BRIDGE	L.S.	(3,010 C.Y.)
503.1091	CONCRETE IN FOOTINGS FOR H1-K BRIDGE	L.S.	(681 C.Y.)
504.8100	POST-TENSIONING OPERATION FOR CAST-IN-PLACE STRUCTURES	L.S.	(207,000 LBS)
505.0001	PILE DRIVING EQUIPMENT EXPENSE	L.S.	(NOT TO EXCEED $8,000.00)
505.0010	PILE LOAD TESTS	EACH	1
505.0020	TEST PILES, DRIVEN	L.F.	1,034
505.0410	TYPE I PRESTRESSED CONCRETE PILES, FURNISHED	L.F.	20,741
505.4100	TYPE I PRESTRESSED CONCRETE PILES, DRIVEN	L.F.	19,707
505.9000	EXTENSIONS OR 'BUILD-UPS' OF PILES	F.A.	
506.0400	T.F.E. AND STAINLESS STEEL BEARING AND EXPANSION PLATES	S.F.	49
507.6000	CONCRETE RAILING AND END POST	L.F.	2,704
602.0051	REINFORCING STEEL IN RETAINING WALLS	L.S.	(56,200 LBS)
602.0053	REINFORCING STEEL FOR HI-K BRIDGE FOOTINGS	L.S.	(82,500 LBS)
602.0090	REINFORCING STEEL IN H1-K BRIDGE	L.S.	(968,100 LBS)

DATE	REVISION
6/6/80	Revised quantities for Item Nos. 206.6000 & 206.7000, per Addendum No. 1.

ENGINEERING DESIGN GROUP, INC.
Consulting Engineers
225 Queen St., Suite 504
Honolulu, Hawaii 96813

EDGAR K. M. LEE
REGISTERED PROFESSIONAL ENGINEER
No. 2150
HAWAII, U.S.A.

This work was prepared by me or under my supervision

STATE OF HAWAII
DEPARTMENT OF TRANSPORTATION
LAND TRANSPORTATION FACILITIES DIVISION

INDEX TO DRAWINGS, ESTIMATED QUANTITIES, ABBREVIATIONS & SYMBOLS

INTERSTATE ROUTE H-1
KAPIOLANI INTERCHANGE ON-RAMP
F.A.I. PROJ. NO. I-H1-1(157):24

Scale: As Noted
Date: 4-10-80

SHEET No. S-1 OF S-41 SHEETS

ORIGINAL PLAN
SURVEY PLOTTED BY
DRAWN BY
TRACED BY
DESIGNED BY
QUANTITIES BY
CHECKED BY
DATE
NOTE BOOK
No.

68R

S-1

FED. ROAD DIST. NO.	STATE	FED. AID PROJ. NO.	FISCAL YEAR	SHEET NO.	TOTAL SHEETS
HAWAII	HAW.	I-H1-1(157):24	1979	69	146

GENERAL NOTES

SPECIFICATIONS: AASHTO

STANDARD SPECIFICATIONS FOR HIGHWAY BRIDGES (12TH EDITION) WITH SUBSEQUENT ADDITIONS AND MODIFICATIONS.

DESIGN LOADS: HS 20-44

DESIGN STRESSES

		F'c	CLASS
CONCRETE:	POST-TENSIONED SUPERSTRUCTURE (INCLUDING DECK SLAB)	5,500 PSI	
	PIER COLUMNS AND PIER CAPS	5,500 PSI	
	ABUTMENTS & WALLS & RAILINGS	3,000 PSI	A
	PILE CAPS AT PIER COLUMNS	4,500 PSI	E
	ABUTMENT & WALL FOOTINGS	3,000 PSI	A

REINFORCING STEEL: Fs = 20 KSI TENSION (24 KSI FOR PIER COLUMN VERTICAL BARS)

PILES: 75 TON CAPACITY TYPICAL (50 TONS AT ABUTMENT #1 ONLY)

SPREAD FOOTINGS: 4,000 PSF

MATERIALS:

1. ALL CONCRETE SHALL BE CLASS A EXCEPT AS NOTED ABOVE AND WHERE OTHERWISE NOTED ON THE PLANS.
2. REINFORCING STEEL SHALL CONFORM TO THE REQUIREMENTS OF ASTM A 615 AND SHALL BE OF THE FOLLOWING GRADES:
   PIER COLUMN VERTICAL BARS — GRADE 60
   ALL OTHER REINFORCING STEEL — GRADE 40
3. ALL STRUCTURAL STEEL SHALL BE ASTM A 36 STEEL, GALVANIZED AFTER FABRICATION.

CONSTRUCTION METHODS:

1. SIDES OF FOOTINGS SHALL BE EXCAVATED AND POURED TO NEAT LINES WHEN CALLED FOR ON THE PLANS. FOR EXCAVATION OF BOTTOM OF FOOTINGS, SEE STANDARD SPECIFICATIONS. OVER EXCAVATION BEYOND NEAT LINES FOR SIDES OF FOOTINGS AND THE ELEVATIONS INDICATED ON THE PLANS FOR THE BOTTOM OF FOOTINGS SHALL BE BACKFILLED WITH A MINIMUM OF CLASS D CONCRETE AT THE CONTRACTOR'S EXPENSE AND AS DIRECTED BY THE ENGINEER.
2. ALL BACKFILL BEHIND ABUTMENTS SHALL BE COMPLETE IN PLACE BEFORE PLACING OF SUPERSTRUCTURE, EXCEPT AS SHOWN IN THE DETAILS.
3. VERTICAL COLUMN BARS SHALL BE ARRANGED IN SUCH A MANNER AS TO MISS PIER CAP REINFORCING ABOVE.
4. IN GENERAL, TOP OF CONCRETE DECK OF STRUCTURE SHALL BE CONSTRUCTED TO FOLLOW THE FINISH ROADWAY VERTICAL AND HORIZONTAL CURVES AND GRADES.
5. SHORING UNDER THE ENTIRE STRUCTURE SHALL REMAIN IN PLACE UNTIL THE POST-TENSIONING OPERATIONS ARE COMPLETED, EXCEPT WHERE OTHERWISE NOTED ON THE PLANS OR AS DIRECTED BY THE ENGINEER.

CAMBER:

OBTAIN CAMBER BY FORMING AND SHORING CONCRETE SURFACES ABOVE PROFILE GRADES AMOUNT SHOWN IN CAMBER DIAGRAM AND AS INDICATED ON DETAILED DRAWINGS.

GENERAL:

1. THE CONTRACTOR SHALL VERIFY THE LOCATION OF ALL EXISTING UTILITY LINES AND NOTIFY THEIR RESPECTIVE OWNERS BEFORE COMMENCING WITH WORK.
2. THE CONTRACTOR SHALL FURNISH SHOP PLACEMENT AND DETAIL DRAWINGS FOR ALL STRUCTURAL STEEL WORK INCLUDING PROTECTIVE NOSING STEEL ANGLES, STEEL SOLE PLATES AND LIGHT POLE BRACKETS.
3. MINIMUM CONCRETE COVER FOR REINFORCING SHALL BE AS FOLLOWS:
   A. SLABS: TOP BARS - 1-1/2"
      BOTTOM BARS - 1-1/4"
   B. BOX GIRDERS: STIRRUPS, AT OUTSIDE FACES - 1-1/4"
      STIRRUPS, AT INSIDE FACES - 1"
   C. ABUTMENTS, WALLS: 2"
   D. PIERS: 2" TO TIES
   E. CONCRETE CAST AGAINST EARTH: 3"
4. ITEMS TO BE PAID FOR UNDER STRUCTURAL STEEL FOR H1-K SHALL INCLUDE:
   A. STEEL ANGLE PROTECTIVE NOSINGS
   B. STEEL SOLE PLATES
   C. LIGHT POLE BRACKET ASSEMBLAGES & BRACKET ANCHOR PLATES
   D. ANCHORS AND ANCHOR BOLTS

POST-TENSIONING NOTES

1. SEE SPECIFICATIONS FOR OTHER POST-TENSIONED CONCRETE REQUIREMENTS.
2. ALL DUCTS SHALL BE SECURELY ANCHORED AT ALL TIMES DURING CONSTRUCTION TO PREVENT ANY DAMAGE. CONTRACTOR SHALL EXERCISE THE MAXIMUM AMOUNT OF CARE DURING PLACEMENT OF DUCTS, REINFORCING AND CONCRETE IN ORDER TO PROTECT THE DUCTS FROM DAMAGE AND TO PREVENT INTRUSION OF CONCRETE INTO THE DUCTS.
3. POST-TENSIONING SEQUENCE SHALL BE AS FOLLOWS:
   A. STRESS NO MORE THAN 1/2 OF THE TENDONS IN ONE GIRDER BEFORE AN EQUAL NUMBER ARE STRESSED IN ADJACENT GIRDERS.
   B. AT NO TIME DURING THE STRESSING OPERATIONS SHALL MORE THAN 1/6 OF THE TOTAL PRESTRESSING FORCE BE ECCENTRIC ABOUT THE CENTER LINE OF THE BRIDGE.
   C. TENSION UPPER AND LOWER TENDONS ALTERNATELY TO MINIMIZE THE ECCENTRICITY OF THE PRESTRESS FORCE ABOUT THE CENTER OF GRAVITY OF THE BRIDGE SECTION.
4. AFTER ALL POST-TENSIONING OPERATIONS (AND TESTING, IF REQUIRED) ARE COMPLETED, ALL DUCTS SHALL BE GROUTED IN ACCORDANCE WITH THE SPECIFICATIONS.
5. AFTER GROUTING IS COMPLETED, THE ANCHORAGE ASSEMBLY SHALL BE REINFORCED AND PROTECTED AS SHOWN ON THE DRAWINGS.
6. THE MINIMUM VERTICAL CLEAR SPACING OF POST-TENSIONING DUCTS AT ANCHORAGE SHALL BE 1-1/2" OR 1-1/2 TIMES THE MAXIMUM SIZE OF THE CONCRETE AGGREGATE, WHICHEVER IS GREATER. MINIMUM HORIZONTAL CLEAR SPACING BETWEEN DUCTS SHALL BE 2-1/2".
7. WHEN POST-TENSIONING STEEL IS DRAPED OR DEFLECTED, POST-TENSIONING DUCTS MAY BE BUNDLED VERTICALLY IN GROUPS OF THREE MAXIMUM, PROVIDED THAT THE SPACING SPECIFIED IN NOTE 6 ABOVE IS MAINTAINED IN THE END THREE FEET AT ANCHORAGE.
8. ALL STRANDS SHALL BE PLACED IN RIGID METAL DUCTS AFTER BRIDGE CONCRETE IS COMPLETED, UNLESS OTHERWISE NOTED ON DRAWINGS.
9. DUCTS SHALL BE SECURELY TIED AT 4'-0" INTERVALS TO THE VERTICAL STIRRUPS TO PREVENT DISPLACEMENT DURING CONCRETING. PROVIDE EXTRA TIES & SUPPORTS WHERE REQUIRED TO MAINTAIN TENDON PROFILE.
10. REINFORCING STEEL SHALL BE ADJUSTED OR RELOCATED DURING THE INSTALLATION OF PRESTRESSING DUCTS AS REQUIRED TO PROVIDE PLANNED CLEARANCES TO THE PRESTRESSING TENDONS, ANCHORAGES, JACKS AND EQUIPMENT. GIRDER STEMS SHALL BE FLARED NEAR ANCHORAGES WHERE REQUIRED TO PROVIDE A MINIMUM OF 1-1/2" CONCRETE COVER OVER THE POST-TENSIONING DUCTS.
11. POST-TENSIONING ANCHORAGES AND DUCTS ARE SHOWN ON DRAWINGS SCHEMATICALLY ONLY. EXACT NUMBER, ARRANGEMENT AND SIZE OF POST-TENSIONING COMPONENTS SHALL BE DETERMINED BY THE CONTRACTOR. THE EFFECTIVE WORKING POST-TENSIONING FORCE REMAINING AFTER ALL LOSSES, AND THE TENDON PROFILE, SHALL BE AS SHOWN ON THE DRAWINGS. CONTRACTOR SHALL SUBMIT FOR REVIEW COMPLETE DETAILS OF THE METHOD, MATERIALS AND EQUIPMENT TO BE USED IN THE PRESTRESSING OPERATION, INCLUDING PRESTRESSING PLACEMENT DRAWINGS SHOWING ANY ADDITIONS OR REARRANGEMENT OF REINFORCING STEEL OR REVISED GIRDER FLARES. FRICTION, SEATING LOSS AND ELONGATION CALCULATIONS SHALL ALSO BE SUBMITTED.
12. DESIGN IS BASED ON THE FOLLOWING FRICTION COEFFICIENTS:

DUCT	K	U
LARGER THAN 3" DIAMETER	0.0002	0.25
3" DIAMETER OR LESS	0.0003	0.30

13. THE MAXIMUM JACKING FORCE SHALL NOT EXCEED 75% OF THE ULTIMATE TENSILE STRENGTH OF THE STRANDS UNLESS OTHERWISE DIRECTED BY THE ENGINEER. HOWEVER, THE AMOUNT OF STRANDS TO BE FURNISHED SHALL BE COMPUTED ASSUMING THAT THE JACKING FORCE WILL BE ONLY 70% OF THE ULTIMATE TENSILE STRENGTH OF THE STRANDS.
14. CONTRACTOR SHALL TAKE STEPS NECESSARY TO ALLOW SUPERSTRUCTURE TO CONTRACT DURING TENSIONING OPERATIONS. DURING TENSIONING OPERATIONS, THE BOX GIRDER SOFFIT FORMS WILL BE SUBJECT TO THE SAME COMPRESSIVE FORCE AS THE CONCRETE BOX GIRDER UNLESS COMPRESSIBLE JOINTS AND/OR BOND BREAKERS ARE PROVIDED TO RELIEVE THIS FORCE.
15. NO TENSIONING OR GROUTING SHALL BE PERFORMED IN THE ABSENCE OF THE ENGINEER.
16. FRICTION TEST SHALL BE CONDUCTED PRIOR TO FINAL TENSIONING OF STRANDS TO VERIFY ASSUMED FRICTION LOSS. PAYMENT TO BE INCIDENTAL TO POST-TENSIONING OPERATION FOR CAST-IN-PLACE STRUCTURES. NO FRICTION TESTS ARE REQUIRED AT TENDONS WITH DEAD END ANCHORAGES.
17. TWO (2) TESTS WILL BE CONDUCTED FOR EACH DUCT LENGTH AND PROFILE EXCEPT WHERE ANCHORAGES ARE NOT ACCESSIBLE AT BOTH ENDS OF DUCTS.
18. CONTRACTOR SHALL CHECK ALL POST-TENSIONING DUCTS FOR BLOCKAGES PRIOR TO PLACING THE TOP SLAB OF THE BOX GIRDER STRUCTURE.
19. MAXIMUM ALLOWABLE ANCHOR SET SHALL BE 5/8".
20. ASSUMED PRESTRESS LOSSES OTHER THAN FRICTION AND ANCHOR SET = 33,000 P.S.I.
21. PRESTRESSING TENDONS SHALL BE COMPOSED OF 1/2 INCH 270 K.S.I. STRANDS CONFORMING TO ASTM A-416.
22. BEARING PLATES SHALL BE PLACED TIGHT AGAINST FORMS. CENTERLINE OF TENDONS ARE TO BE NORMAL TO PLATES.
23. DURING THE POST-TENSIONING OPERATION, THE WEIGHT OF THE STRUCTURE WILL BE REDISTRIBUTED AND EXTRA LOADS WILL BE ADDED TO THE STRUCTURE AND THE SUPPORTING FALSEWORK AT THE FOLLOWING LOCATIONS:
    a. STA. 3+25 (ABUTMENT NO. 1): ADD A DOWNWARD LOAD OF 980 KIPS.
    b. STA. 4+36 (EXPANSION JOINT): ADD A DOWNWARD LOAD OF 830 KIPS.
    c. STA. 4+71 TO STA. 6+18: ADD A UNIFORM DOWNWARD LOAD OF 10 KIPS PER FOOT OF SPAN.
    d. STA. 8+94 (EXPANSION JOINT): ADD A DOWNWARD LOAD OF 150 KIPS.
    e. STA. 11+40.25 (ABUTMENT NO. 2): ADD A DOWNWARD LOAD OF 250 KIPS.

    AT CONTRACTOR'S OPTION, THE ADDITIONAL LOADS DUE TO THE POST-TENSIONING MAY BE REDUCED BY DISTRIBUTING THE LOADS TO THE STRUCTURE AND THE FALSEWORK IN PROPORTION TO THEIR RELATIVE STIFFNESSES.

ANCHORAGE ASSEMBLY PROTECTION NOTES

1. AFTER ALL POST-TENSIONING WORK IS COMPLETED, CLEAN POST-TENSIONING HARDWARE AS REQUIRED IN ORDER TO PROVIDE GOOD BONDING SURFACE.
2. PROVIDE ADDED REINFORCING AS SHOWN ON THE DRAWINGS.
3. PAINT ENTIRE ANCHORAGE ASSEMBLY (INCLUDING POST-TENSIONING HARDWARE) WITH TWO COMPONENT EPOXY (COST INCIDENTAL TO CONCRETE).
4. JUST BEFORE NEW CONCRETE IS PLACED AGAINST POST-TENSIONING ANCHOR PLATES, APPLY A NEW COAT OF EPOXY FOR BOND WITH CONCRETE.

FOUNDATION NOTES

1. A STRUCTURE FOUNDATION REPORT, DATED MARCH 1979, HAS BEEN PREPARED BY THE DEPARTMENT OF TRANSPORTATION, LAND TRANSPORTATION FACILITIES DIVISION, MATERIALS TESTING AND RESEARCH BRANCH. A COPY OF THIS REPORT WILL BE AVAILABLE FOR REVIEW AT THE DEPARTMENT OF TRANSPORTATION.
2. INDEX TEST PILES: TWO INDEX TEST PILES SHALL BE DRIVEN AT EACH PIER FOOTING AND AT ABUTMENT #1. (TOTAL OF 12 INDEX TEST PILES WILL BE REQUIRED.) LOCATION OF TEST PILES IS SHOWN ON SHEET S-5 AND S-15. TEST PILES SHALL BE SUBJECT TO RELOCATION BY THE ENGINEER.
3. LOAD TEST PILE: ONE LOAD TEST PILE SHALL BE DRIVEN AT PIER NO. 4 OR PIER NO. 5. LOAD TEST PILE LOCATION TO BE DETERMINED BY THE ENGINEER AFTER THE INDEX TEST PILES HAVE BEEN DRIVEN. LOAD TEST PILE SHALL HAVE A 5" DIAMETER CENTRAL HOLE AND 3 ROD EXTENSOMETERS.
4. SPLICES IN PILES SHALL BE IN ACCORDANCE WITH THE TYPICAL PILE SPLICE DETAILS. ONLY ONE SPLICE SHALL BE USED IN ANY PILE. LENGTH OF EACH SECTION OF PILE SHALL BE SET SO THAT THE SPLICE IS LOCATED WITHIN THE MIDDLE THIRD OF THE TOTAL PILE LENGTH.
5. CENTRAL HOLE FOR INSPECTION IN LOAD TEST PILES SHALL BE FORMED BY A 5" DIA. CORRUGATED PLASTIC PIPE CAST IN THE CENTER OF THE PILE. THE PIPE SHALL HAVE A RADIAL TOLERANCE OF 1/8" OFF-SET FROM CENTER OF PILE EXCEPT THAT WITHIN 3 FEET OF THE ENDS OF PILE SEGMENTS THE RADIAL TOLERANCE SHALL BE 1/16" OFF-SET FROM THE CENTER OF THE PILE. THE ALLOWABLE DEVIATION FROM STRAIGHT FOR THE PIPE IS 1/8" IN ANY 10 FEET OF LENGTH. STOP AND CAP PLASTIC PIPE 2'-0" FROM PILE TIP.
6. THE 5" DIA. CORRUGATED PLASTIC PIPE SHALL BE SIMILAR OR EQUAL, AS DETERMINED BY THE ENGINEER, TO THE CORRUGATED PLASTIC DRAINAGE TUBING MANUFACTURED BY ADVANCE DRAINAGE SYSTEMS AND SHALL HAVE A WALL THICKNESS OF 0.05 INCHES, 5.73 INCHES O.D. ON OUTSIDE OF CORRUGATION OF 5.07 INCHES O.D. ON INSIDE OF CORRUGATION, AND A PITCH OF 0.7 INCHES. THE PIPE SHALL BE MADE IN STRAIGHT LENGTHS, NOT COILED, OF 10 FEET EACH AND BE NON-PERFORATED.
7. AT PILE SPLICES IN LOAD TEST PILES, PROVIDE 7-1/2" DIA. CENTER HOLE IN 1/2" PLYWOOD THAT OCCURS BETWEEN ENDS OF PILE SECTIONS.
8. PILE SPLICES AND 5" DIA. CORRUGATED PLASTIC PIPE FOR CENTRAL INSPECTION HOLES SHALL BE INCIDENTAL TO "TYPE I PRESTRESSED CONCRETE PILES, FURNISHED", AND WILL NOT BE PAID FOR SEPARATELY.

DATE	REVISION
6/6/80	Added note 23 under "POST-TENSIONING NOTES" and notes 5, 6, 7 & 8 under "FOUNDATION NOTES", per Addendum No. 1.

ENGINEERING DESIGN GROUP, INC.
Consulting Engineers
225 Queen St., Suite 504
Honolulu, Hawaii 96813

EDGAR K. M. LEE
REGISTERED PROFESSIONAL ENGINEER
No. 2150
HAWAII, U.S.A.

This work was prepared by me or under my supervision.

STATE OF HAWAII
DEPARTMENT OF TRANSPORTATION
LAND TRANSPORTATION FACILITIES DIVISION

GENERAL NOTES, POST-TENSIONING NOTES & FOUNDATION NOTES

INTERSTATE ROUTE H-1
KAPIOLANI INTERCHANGE ON-RAMP
F.A.I. PROJ. NO. I-H1-1(157):24

Scale: As Noted — Date: 4-10-80

SHEET No. S-2 OF S-41 SHEETS

ORIGINAL PLAN — NOTE BOOK No. — SURVEY PLOTTED BY — DRAWN BY — TRACED BY — DESIGNED BY — QUANTITIES BY — CHECKED BY — DATE

69R

FED. ROAD DIST. NO.	STATE	FED. AID PROJ. NO.	FISCAL YEAR	SHEET NO.	TOTAL SHEETS
HAWAII	HAW.	I-HI-1(157)24	1979	70	146

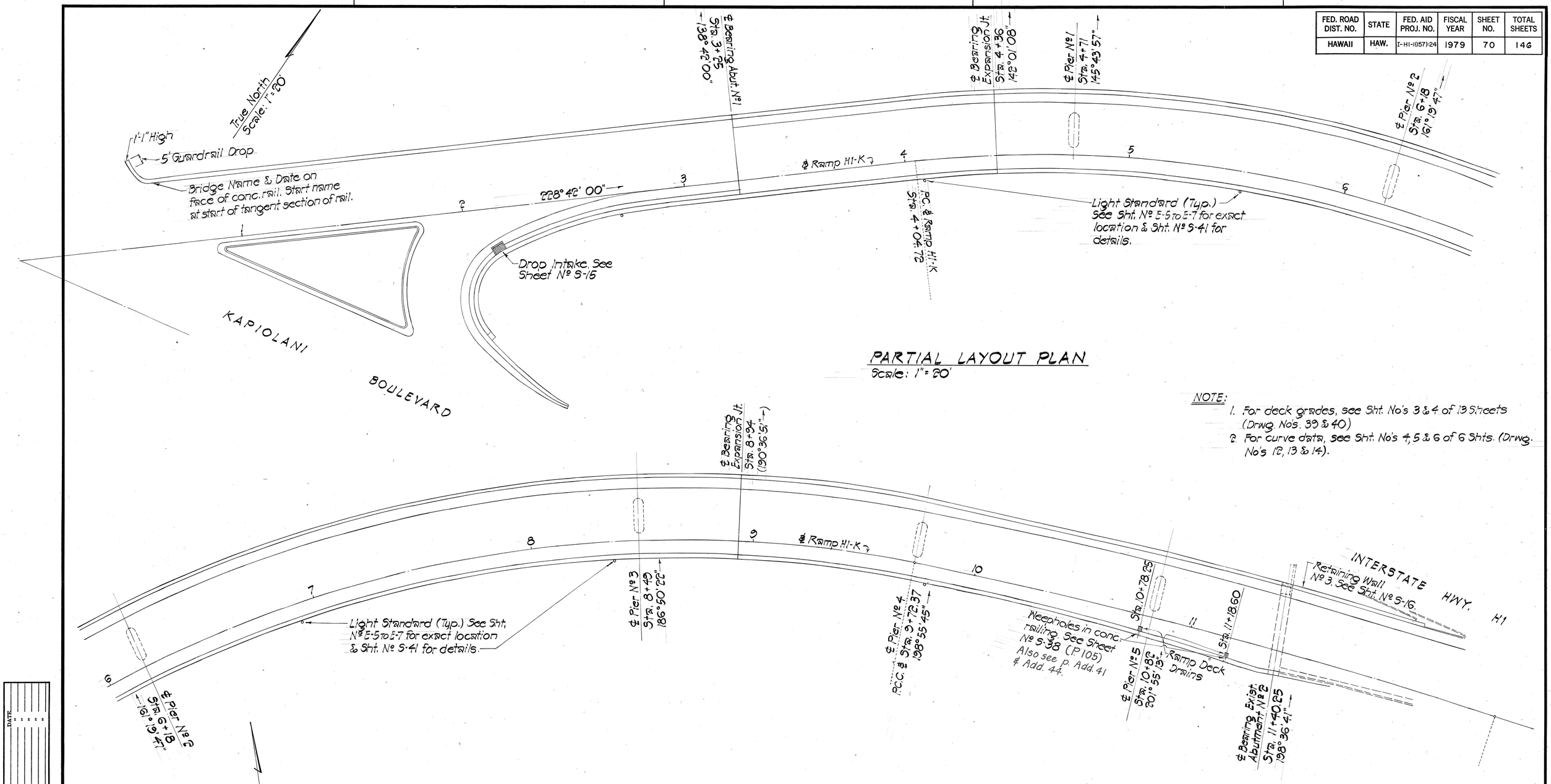

NOTE:

1. For deck grades, see Sht. No's 3 & 4 of 13 Sheets (Drwg. No's. 39 & 40)
2. For curve data, see Sht. No's 4, 5 & 6 of 6 Shts. (Drwg. No's 12, 13 & 14).

ORIGINAL PLAN	SURVEY PLOTTED BY	DATE
	DRAWN BY	"
	TRACED BY	"
NOTE BOOK	DESIGNED BY	"
	QUANTITIES BY	"
No.	CHECKED BY	"

ENGINEERING DESIGN GROUP, INC.
Consulting Engineers
225 Queen St., Suite 504
Honolulu, Hawaii 96813

EDGAR K. M. LEE
REGISTERED PROFESSIONAL ENGINEER
No. 2150
HAWAII, U.S.A.

This work was prepared by me or under my supervision.

STATE OF HAWAII
DEPARTMENT OF TRANSPORTATION
LAND TRANSPORTATION FACILITIES DIVISION

LAYOUT PLAN

INTERSTATE ROUTE H-1
KAPIOLANI INTERCHANGE ON-RAMP
F.A.I. PROJ. NO. I-H1-1(157):24

Scale: As Noted — Date: 4-10-80

SHEET NO. 5-3 OF 5-4 SHEETS

FED. ROAD DIST. NO.	STATE	FED. AID PROJ. NO.	FISCAL YEAR	SHEET NO.	TOTAL SHEETS
HAWAII	HAW.	I-HI-1(157)24	1979	71	146

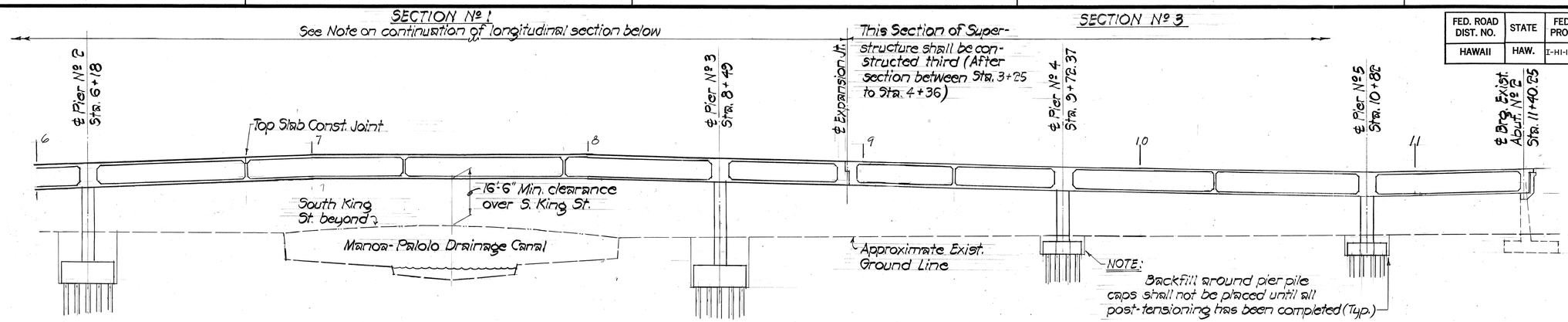

LONGITUDINAL SECTION ALONG ℄ RAMP HI-K

Scale: 1" = 20'

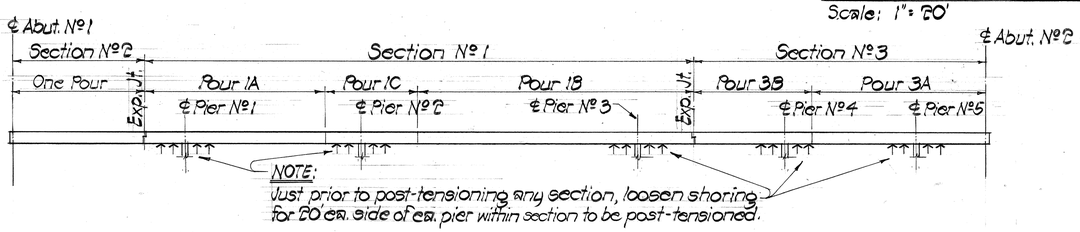

SCHEMATIC GIRDER CONSTRUCTION SEQUENCE DIAGRAM

No Scale

Construction Sequence shall be as follows:

1. Pour Section 1A } These pours can be done simultaneously
2. Pour Section 1B }
3. Wait 28 days, then pour Section 1C
4. Post-tension & grout tendons for Section Nº 1, pour post-tensioning blockouts.
5. Pour Section Nº 2 } These pours can be made simultaneously
6. Pour Section 3A }
7. Wait 14 days, then pour Section 3B
8. Complete post-tensioning, grouting of tendons, etc.

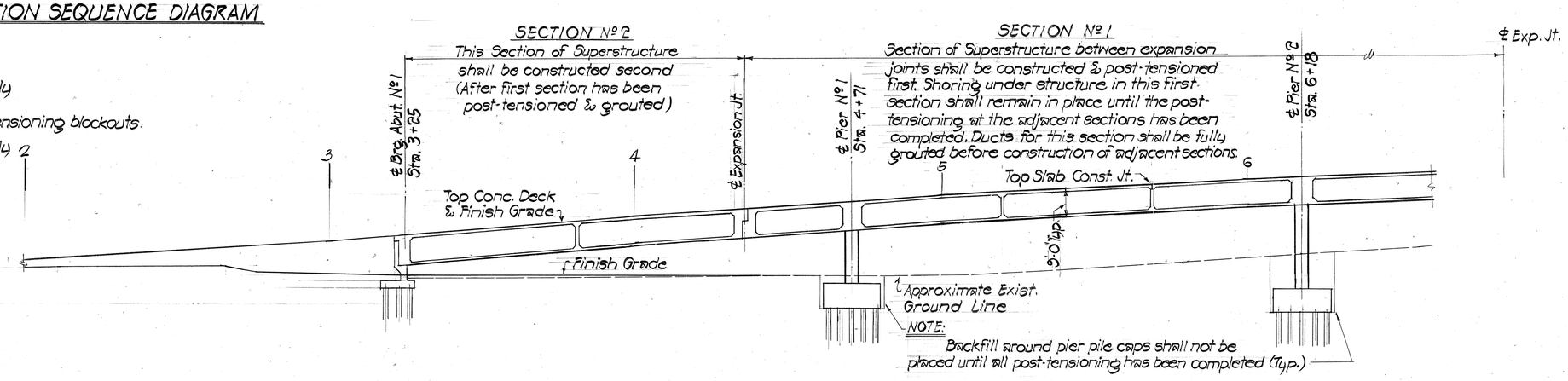

LONGITUDINAL SECTION ALONG ℄ RAMP HI-K

Scale: 1" = 20'

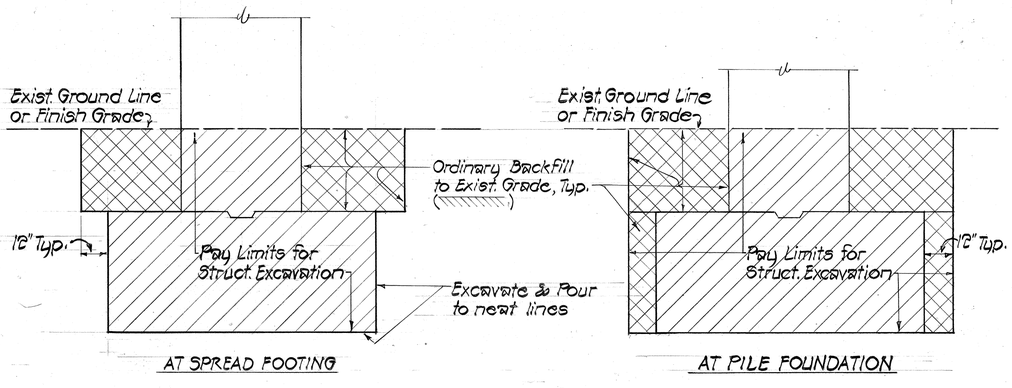

TYPICAL LIMITS OF STRUCTURAL EXCAVATION PAYLINE & BACKFILL

NOTE:
For Limits of structural excavation at retaining wall footings, see Sht. S-35

ORIGINAL PLAN	SURVEY PLOTTED BY	DATE
	DRAWN BY	"
	TRACED BY	"
NOTE BOOK	DESIGNED BY	"
No.	QUANTITIES BY	"
	CHECKED BY	"

ENGINEERING DESIGN GROUP, INC.
Consulting Engineers
225 Queen St., Suite 504
Honolulu, Hawaii 96813

EDGAR K. M. LEE
REGISTERED PROFESSIONAL ENGINEER
No. 2150
HAWAII, U.S.A.

This work was prepared by me or under my supervision

STATE OF HAWAII
DEPARTMENT OF TRANSPORTATION
LAND TRANSPORTATION FACILITIES DIVISION

LONGITUDINAL SECTION

INTERSTATE ROUTE H-1
KAPIOLANI INTERCHANGE ON-RAMP
F.A.I. PROJ. NO. I-HI-1(157):24

Scale: As Noted
Date: 4-10-80

SHEET No. S-4 OF S-4 SHEETS

FED. ROAD DIST. NO.	STATE	FED. AID PROJ. NO.	FISCAL YEAR	SHEET NO.	TOTAL SHEETS
HAWAII	HAW.	I-HI-1(157)24	1979	72	146

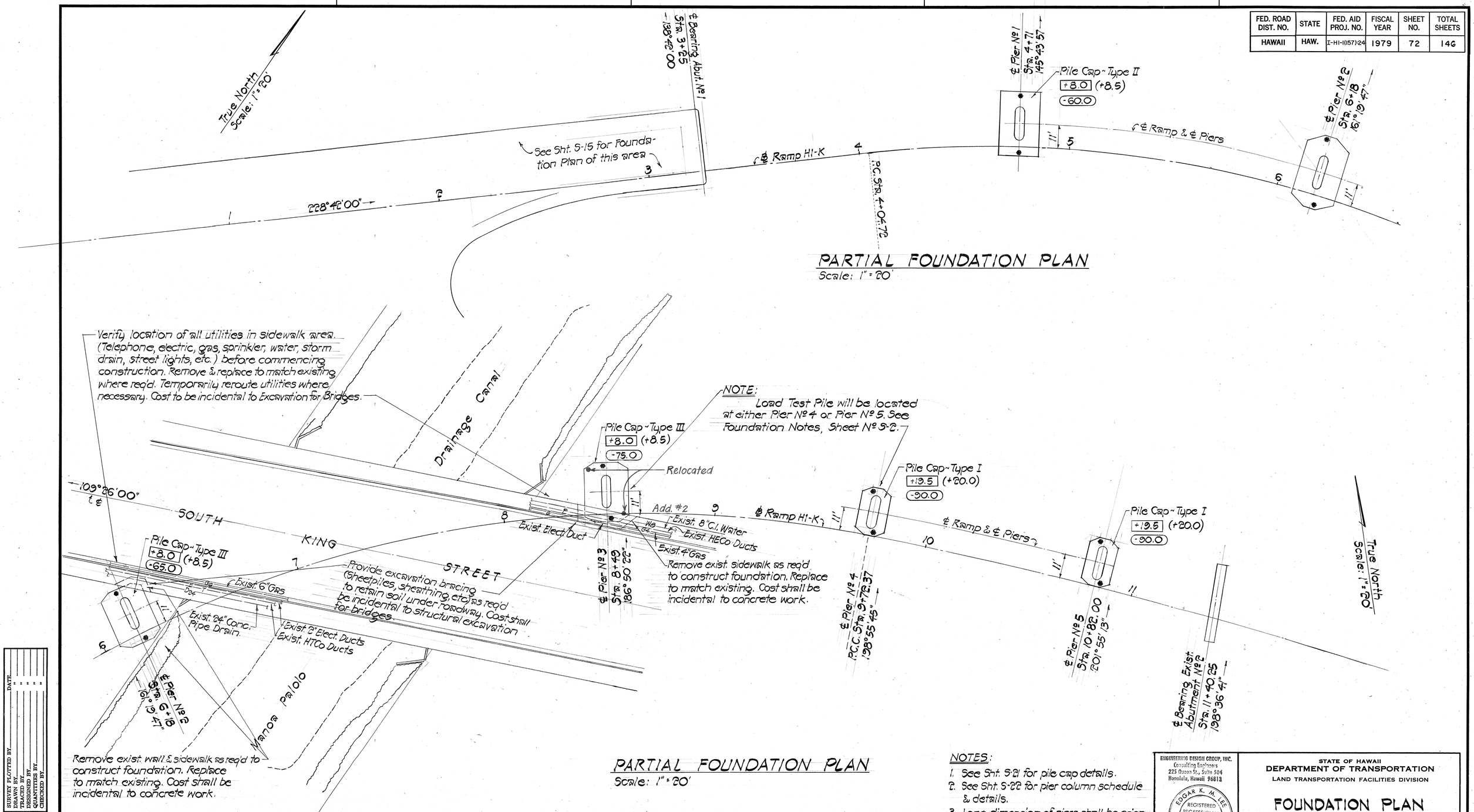

PARTIAL FOUNDATION PLAN

Scale: 1" = 20'

PARTIAL FOUNDATION PLAN

Scale: 1" = 20'

NOTES:

1. See Sht. S-21 for pile cap details.
2. See Sht. S-22 for pier column schedule & details.
3. Long dimension of piers shall be oriented @ right angles to ℄ Ramp H1-K.

+19.5 Bot. of Pile Cap Elevation

(+20.0) Pile Cut-off Elevation

(-90.0) Pile Tip Elevation

● Index Test Pile. See Foundation Notes, Sheet Nº S-2.

DATE	REVISION
6/16/80	Revised existing 12" Water to 8" Water near Pier No. 3, per Addendum No. 2.

ENGINEERING DESIGN GROUP, INC.
Consulting Engineers
225 Ocean St., Suite 504
Honolulu, Hawaii 96813

EDGAR K. M. LEE
REGISTERED PROFESSIONAL ENGINEER
No. 2150
HAWAII, U.S.A.

This work was prepared by me or under my supervision

STATE OF HAWAII
DEPARTMENT OF TRANSPORTATION
LAND TRANSPORTATION FACILITIES DIVISION

FOUNDATION PLAN

INTERSTATE ROUTE H-1
KAPIOLANI INTERCHANGE ON-RAMP
F.A.I. PROJ. NO. I-H1-1(157):24

Scale: As Noted Date: 4-10-80

SHEET No. S-5 OF S-4 SHEETS

ORIGINAL PLAN | SURVEY PLOTTED BY | DRAWN BY | TRACED BY | DESIGNED BY | QUANTITIES BY | CHECKED BY | DATE | NOTE BOOK | No.

72R

FED. ROAD DIST. NO.	STATE	FED. AID PROJ. NO.	FISCAL YEAR	SHEET NO.	TOTAL SHEETS
HAWAII	HAW.	I-H1-1(157)24	1979	73	146

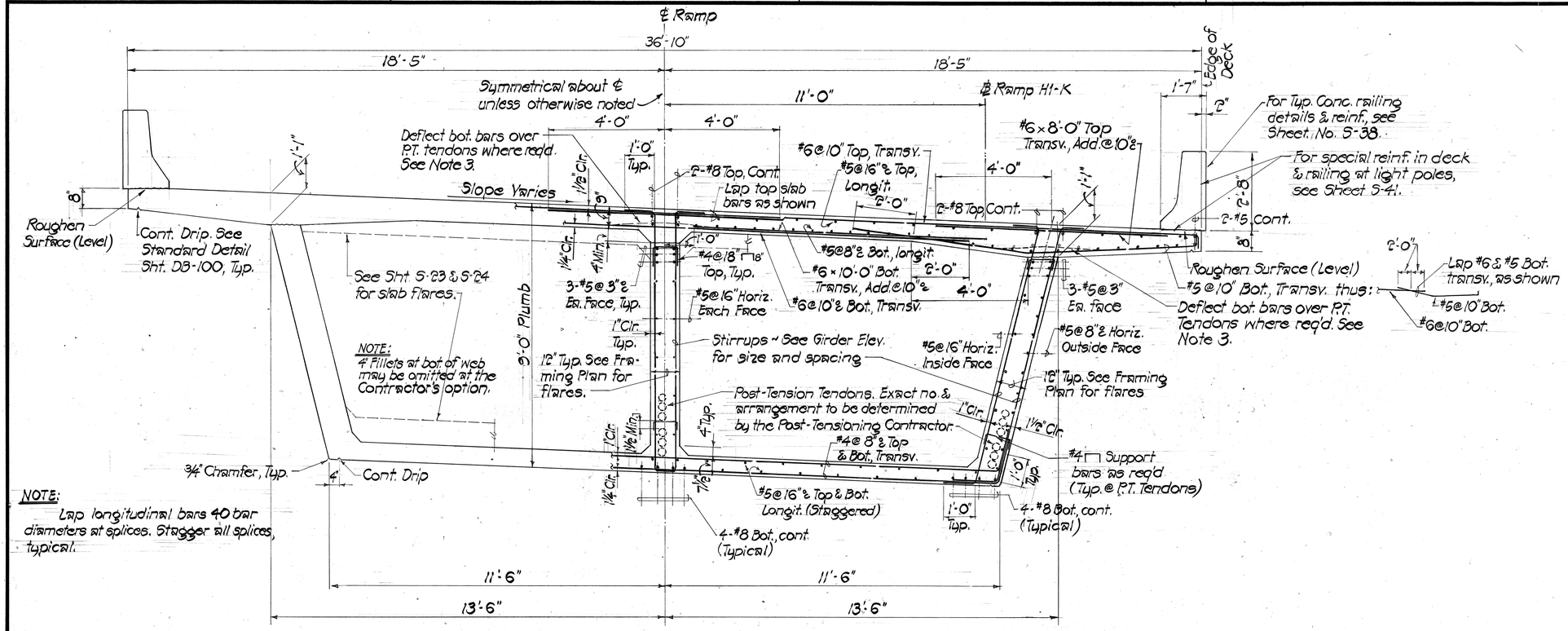

NOTE:
Lap longitudinal bars 40 bar diameters at splices. Stagger all splices, typical.

NORMAL DECK SECTION

Scale: ½" = 1'-0"

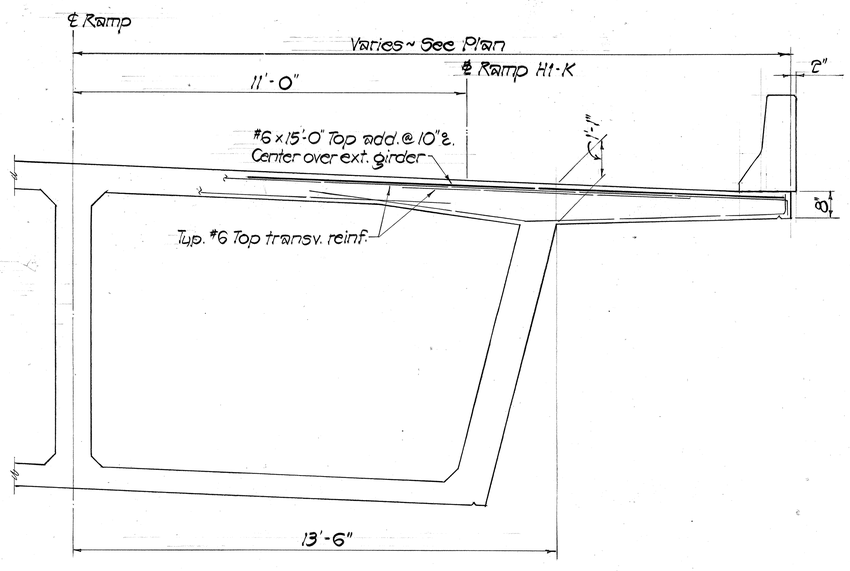

NOTE:
Balance of Detail not noted or shown shall be same as Normal Deck Section above.

PARTIAL DECK SECTION BETWEEN STA. 10+25 & STA. 11+40.25

Scale: ½" = 1'-0"

NOTE:

1. Deck transverse bars shall be placed radially (perpendicular to ℄ Ramp H1-K). See Deck Framing Plans & Layout Plans for curvature at deck. Bar spacings noted shall be the maximum spacing.
2. See Top & Bottom Slab Steel Placement Diagrams for added rebars & rebar layout.
3. Where P.T. ducts project above top of horiz. web construction joints, extra precautions shall be taken while constructing deck slab to prevent damage to ducts & to prevent leakage of water or concrete into the ducts.

ORIGINAL PLAN	SURVEY PLOTTED BY	DATE
	DRAWN BY	"
	TRACED BY	"
NOTE BOOK	DESIGNED BY	"
	QUANTITIES BY	"
No.	CHECKED BY	"

ENGINEERING DESIGN GROUP, INC.
Consulting Engineers
225 Queen St., Suite 504
Honolulu, Hawaii 96813

EDGAR K. M. LEE
REGISTERED PROFESSIONAL ENGINEER
No. 2150
HAWAII

This work was prepared by me or under my supervision

STATE OF HAWAII
DEPARTMENT OF TRANSPORTATION
LAND TRANSPORTATION FACILITIES DIVISION

NORMAL DECK SECTIONS

INTERSTATE ROUTE H-1
KAPIOLANI INTERCHANGE ON-RAMP
F.A.I. PROJ. NO. I-H1-1(157)24

Scale: As Noted
Date: 4-10-80

SHEET No. S-6 OF S-41 SHEETS

FED. ROAD DIST. NO.	STATE	FED. AID PROJ. NO.	FISCAL YEAR	SHEET NO.	TOTAL SHEETS
HAWAII	HAW.	I-HI-1(157):24	1979	74	146

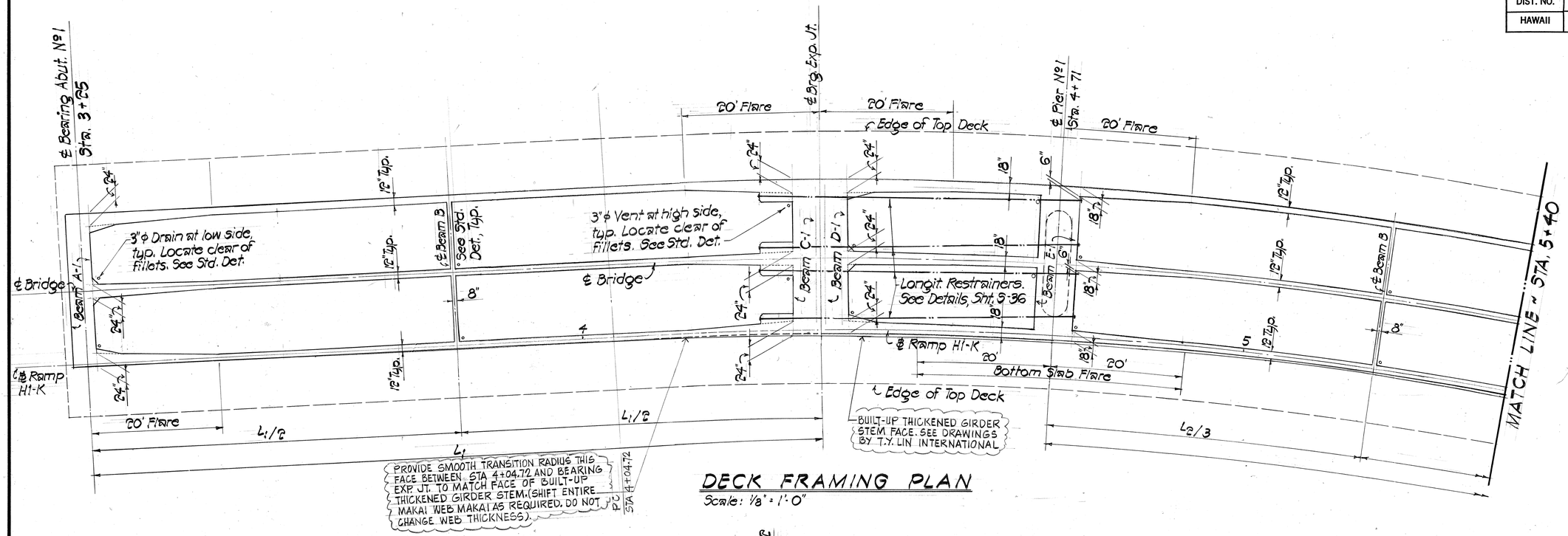

DECK FRAMING PLAN

Scale: 1/8" = 1'-0"

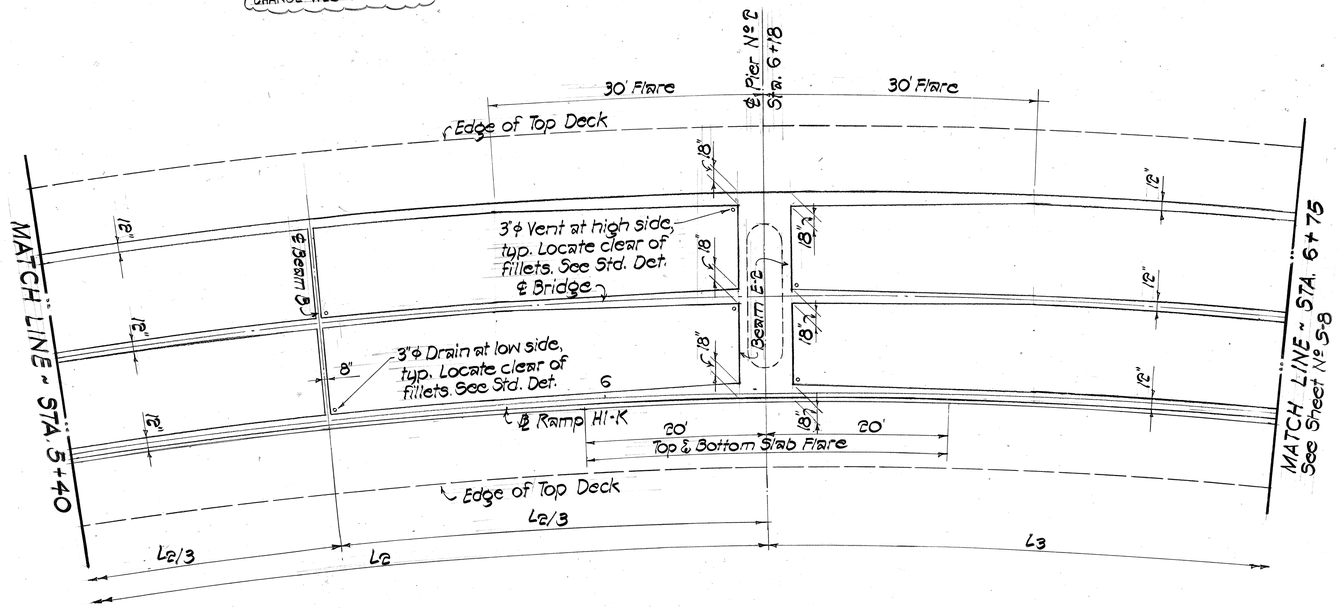

DECK FRAMING PLAN

Scale: 1/8" = 1'-0"

DATE	REVISION
3-25-83	Shifted Makai Web @ Exp Jt

ENGINEERING DESIGN GROUP, INC.
Consulting Engineers
225 Queen St., Suite 504
Honolulu, Hawaii 96813

EDGAR K. M. LEE
REGISTERED PROFESSIONAL ENGINEER
No. 2150
HAWAII, U.S.A.

This work was prepared by me or under my supervision

STATE OF HAWAII
DEPARTMENT OF TRANSPORTATION
LAND TRANSPORTATION FACILITIES DIVISION

DECK FRAMING PLAN
STA. 3+25 to STA. 6+75

INTERSTATE ROUTE H-1
KAPIOLANI INTERCHANGE ON-RAMP
F.A.I. PROJ. NO. I-H1-1(157):24

Scale: As Noted — Date: 4-10-80

SHEET No. S-7 OF S-41 SHEETS

ORIGINAL PLAN		DATE
	SURVEY PLOTTED BY	
	TRACED BY	"
	DESIGNED BY	"
NOTE BOOK	QUANTITIES BY	"
No.	CHECKED BY	"

C.O. 74

FED. ROAD DIST. NO.	STATE	FED. AID PROJ. NO.	FISCAL YEAR	SHEET NO.	TOTAL SHEETS
HAWAII	HAW.	I-HI-1(157)24	1979	75	146

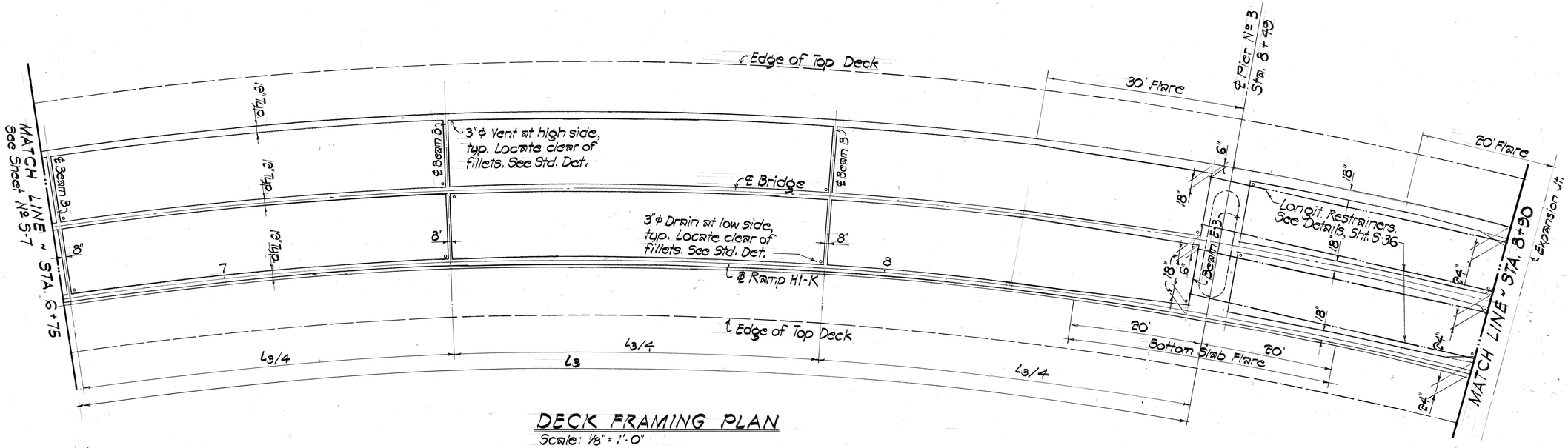

DECK FRAMING PLAN
Scale: 1/8" = 1'-0"

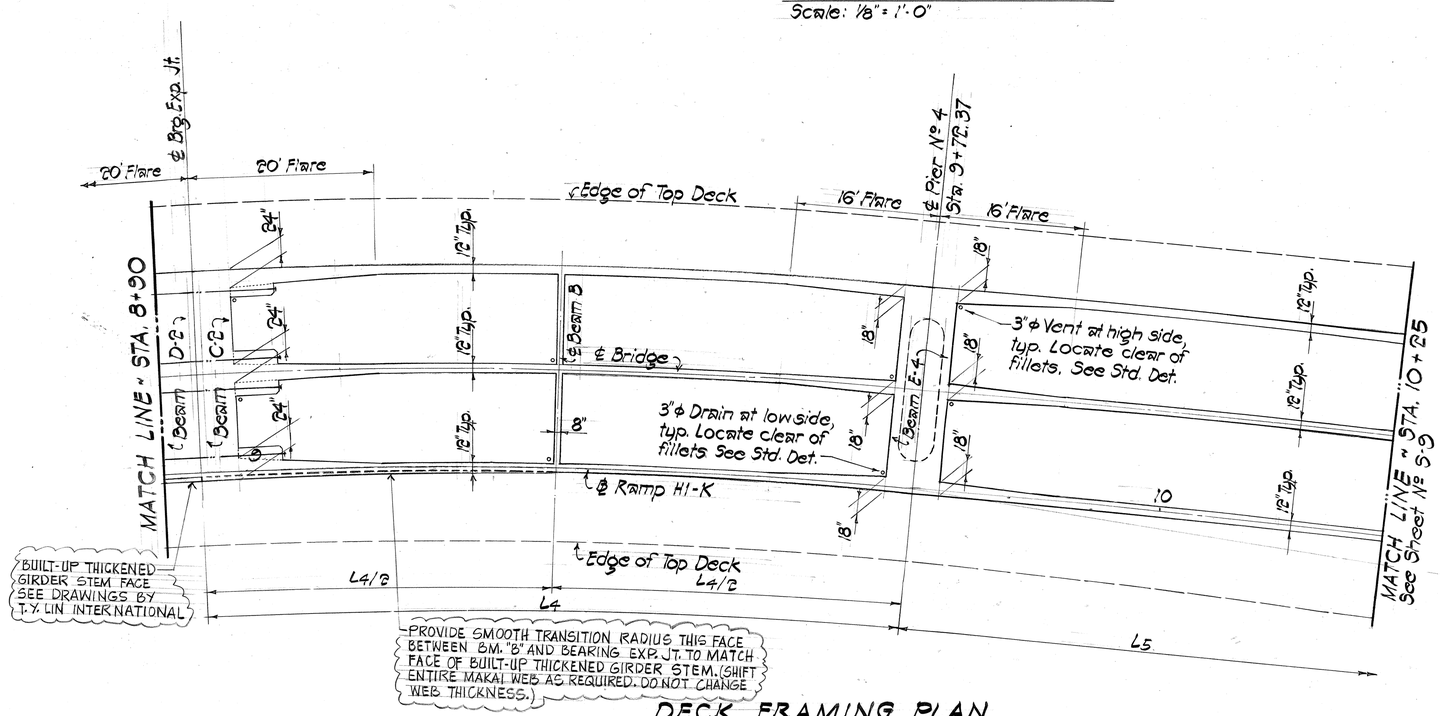

DECK FRAMING PLAN
Scale: 1/8" = 1'-0"

ORIGINAL PLAN	SURVEY PLOTTED BY	DATE
	DRAWN BY	"
	TRACED BY	"
NOTE BOOK	DESIGNED BY	"
	QUANTITIES BY	"
No.	CHECKED BY	"

DATE	REVISION
3-25-83	Shifted Makai Web @ Exp. Jt.

ENGINEERING DESIGN GROUP, INC.
Consulting Engineers
225 Queen St., Suite 506
Honolulu, Hawaii 96813
EDGAR K. M. LEE
REGISTERED PROFESSIONAL ENGINEER
No. 2150
HAWAII, U.S.A.
This work was prepared by me or under my supervision

STATE OF HAWAII
DEPARTMENT OF TRANSPORTATION
LAND TRANSPORTATION FACILITIES DIVISION

DECK FRAMING PLAN
STA. 6+75 TO STA. 10+25

INTERSTATE ROUTE H-1
KAPIOLANI INTERCHANGE ON-RAMP
F.A.I. PROJ. NO. I-H1-1(157):24

Scale: As Noted
Date: 4-10-80

SHEET No. 5-8 OF 5-4 SHEETS

C.O. 75

FED. ROAD DIST. NO.	STATE	FED. AID PROJ. NO.	FISCAL YEAR	SHEET NO.	TOTAL SHEETS
HAWAII	HAW.	I-H1-1(157)-24	1979	76	146

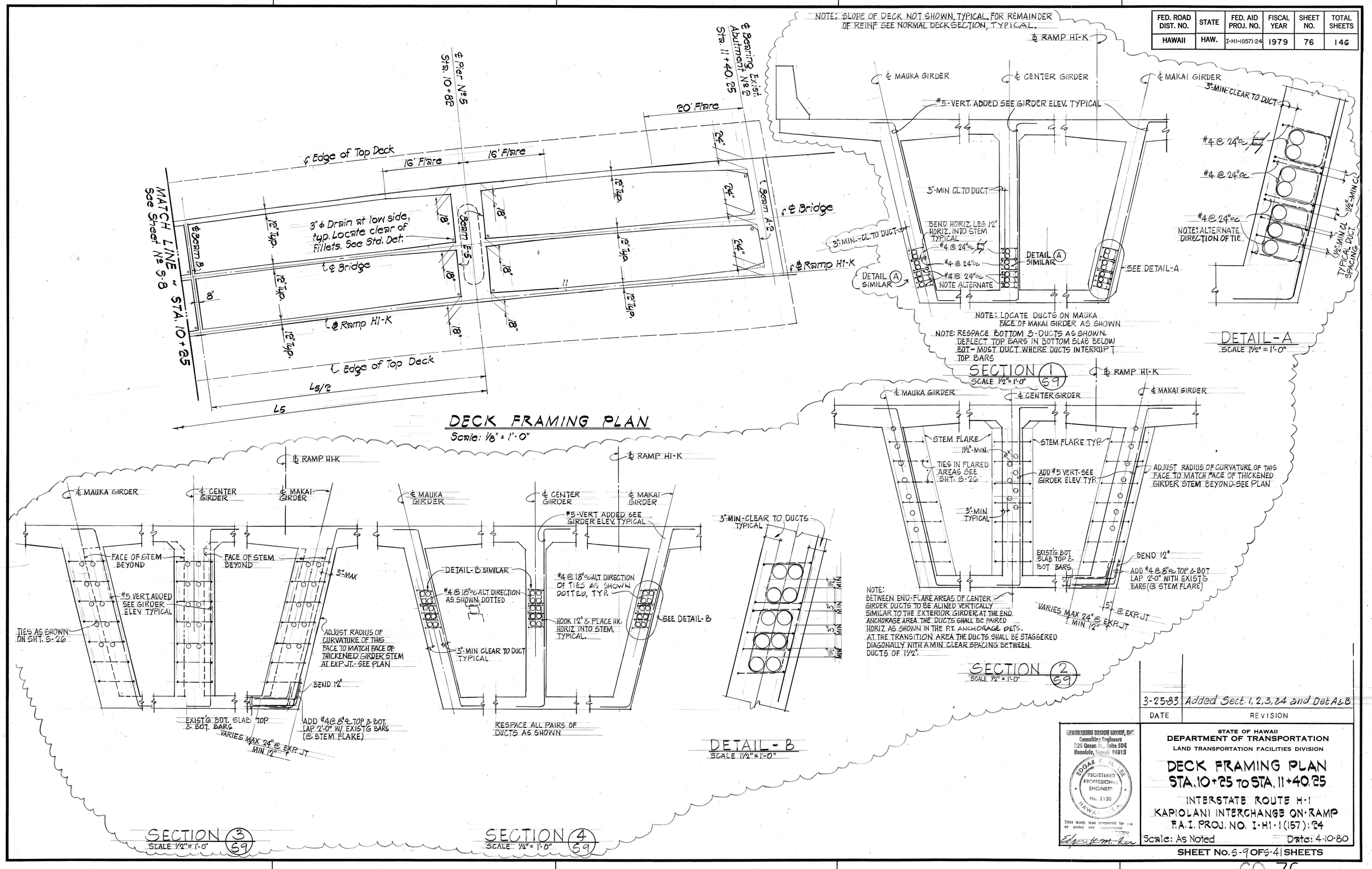

DATE	REVISION
3-25-83	Added Sect. 1, 2, 3, & 4 and Det A & B

ENGINEERING DESIGN GROUP, INC.
Consulting Engineers
925 Queen St., Suite 504
Honolulu, Hawaii 96813

EDGAR K. M. LEE
REGISTERED PROFESSIONAL ENGINEER
No. 2150
HAWAII, U.S.A.

This work was prepared by me or under my supervision

STATE OF HAWAII
DEPARTMENT OF TRANSPORTATION
LAND TRANSPORTATION FACILITIES DIVISION

DECK FRAMING PLAN
STA. 10+25 to STA. 11+40.25

INTERSTATE ROUTE H-1
KAPIOLANI INTERCHANGE ON-RAMP
F.A.I. PROJ. NO. I-H1-1(157):24

Scale: As Noted
Date: 4-10-80

SHEET No. S-9 OF S-41 SHEETS

ORIGINAL PLAN
SURVEY PLOTTED BY
DRAWN BY
TRACED BY
TYPEWRITTEN BY
QUANTITIES BY
CHECKED BY
DATE
NOTE BOOK
No.

C.O. 76

FED. ROAD DIST. NO.	STATE	FED. AID PROJ. NO.	FISCAL YEAR	SHEET NO.	TOTAL SHEETS
HAWAII	HAW.	I-HI-1(157)24	1979	77	146

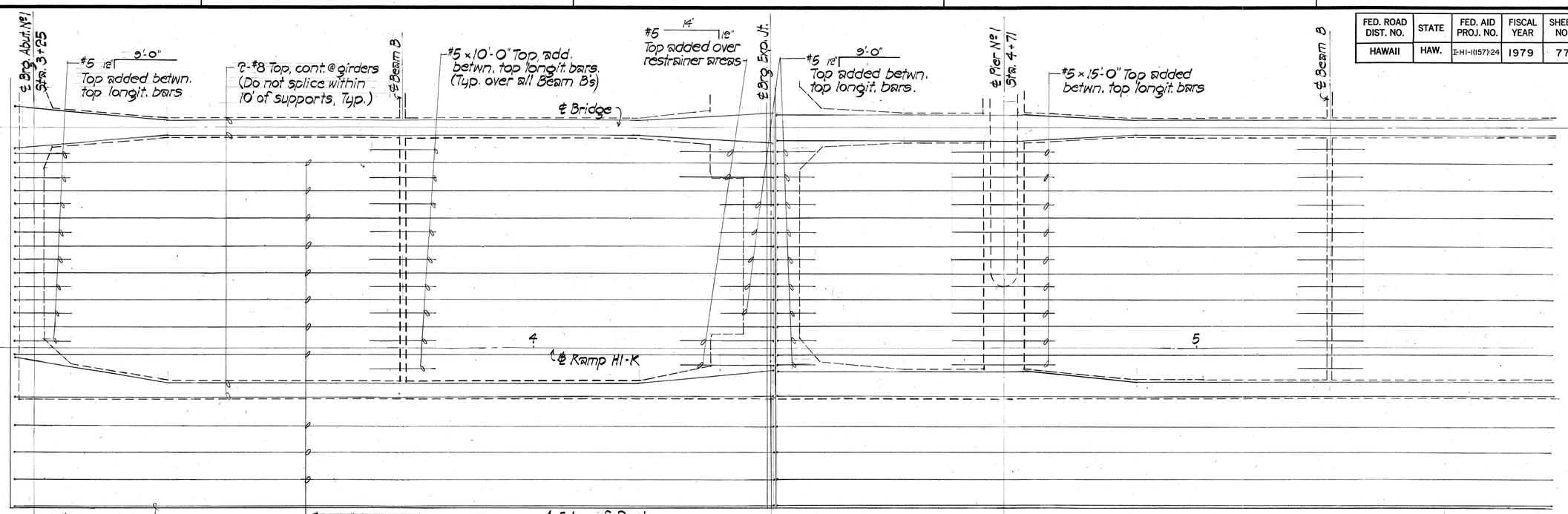

TOP SLAB STEEL PLACEMENT DIAGRAM (Top Layer Longit. Bars)

SCALES: Horiz. 1/8" = 1'-0"
Vert. 3/8" = 1'-0"

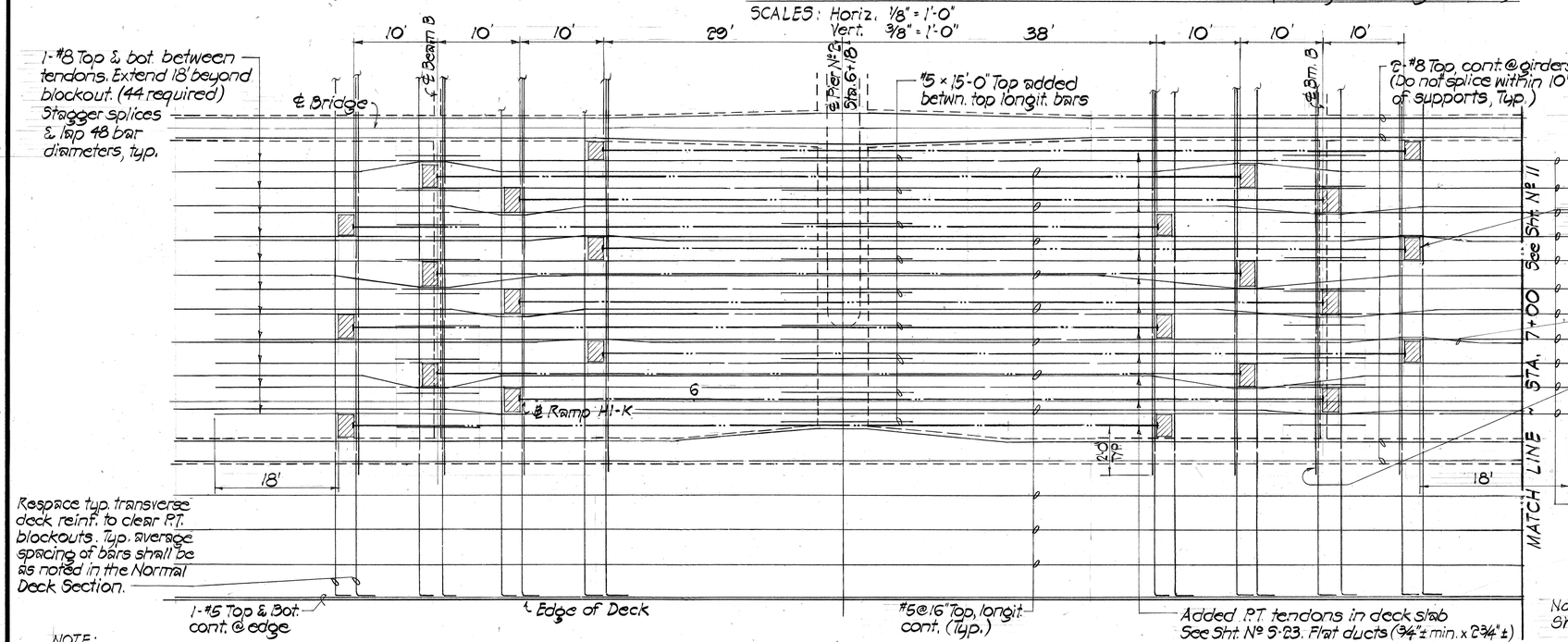

TOP SLAB STEEL PLACEMENT DIAGRAM (Top Layer Longit. Bars)

SCALES: Horiz. 1/8" = 1'-0"
Vert. 3/8" = 1'-0"

NOTE:
All bars to follow curvature of girders. See Deck Framing Plan & Layout Plans for true curvature of deck.

Added P.T. tendons in deck slab See Sht. No. S-23. Flat ducts (3/4"± min. x 2 3/4"±) & rectangular bearing plates (4"± x 9 3/4"±) shall be used. Strands shall be protected with a corrosion inhibitor if they are placed in ducts before concrete is placed.

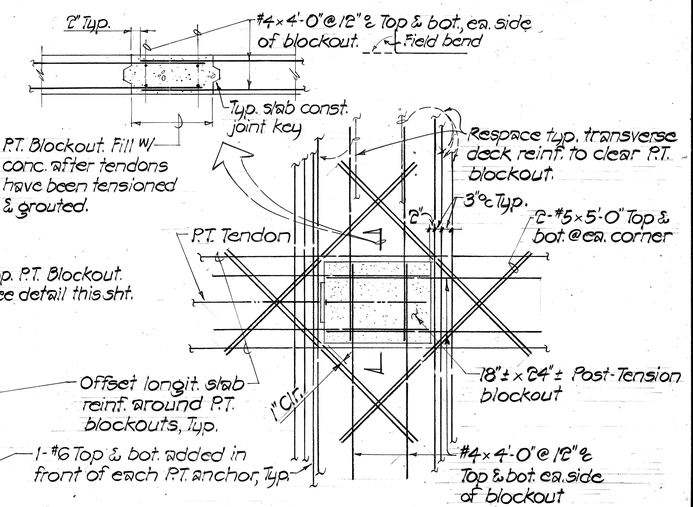

TYP. P.T. BLOCKOUT IN DECK SLAB DETAIL

Scale: 3/4" = 1'-0"

Top & bot. added bars betwn tendons ~ See note at opposite end.

Note: See notes, Sht No. S-11

SURVEY PLOTTED BY	DATE
DRAWN BY	"
TRACED BY	"
DESIGNED BY	"
QUANTITIES BY	"
CHECKED BY	"

ORIGINAL PLAN — NOTE BOOK — No.

ENGINEERING DESIGN GROUP, INC.
Consulting Engineers
225 Queen St., Suite 504
Honolulu, Hawaii 96813

EDGAR K. M. LEE
REGISTERED PROFESSIONAL ENGINEER
No. 2150
HAWAII

This work was prepared by me or under my supervision

STATE OF HAWAII
DEPARTMENT OF TRANSPORTATION
LAND TRANSPORTATION FACILITIES DIVISION

TOP SLAB STEEL PLACEMENT DIAGRAM ~ STA. 3+25 TO STA. 7+00
INTERSTATE ROUTE H-1
KAPIOLANI INTERCHANGE ON-RAMP
F.A.I. PROJ. NO. I-H1-1(157):24

Scale: As Noted — Date: 4-10-80

SHEET No. S-10 OF S-4 SHEETS

FED. ROAD DIST. NO.	STATE	FED. AID PROJ. NO.	FISCAL YEAR	SHEET NO.	TOTAL SHEETS
HAWAII	HAW.	I-HI-1(157)-24	1979	78	146

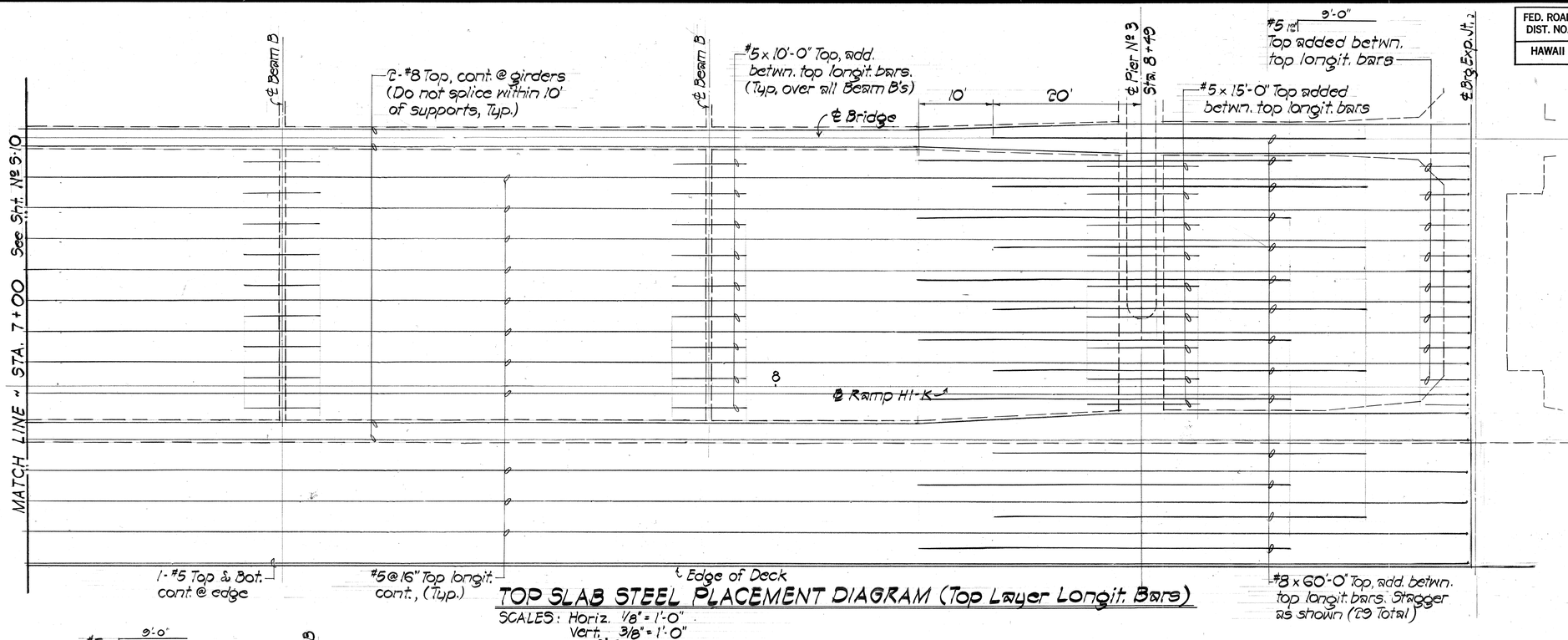

TOP SLAB STEEL PLACEMENT DIAGRAM (Top Layer Longit. Bars)

SCALES: Horiz. 1/8" = 1'-0"
Vert. 3/8" = 1'-0"

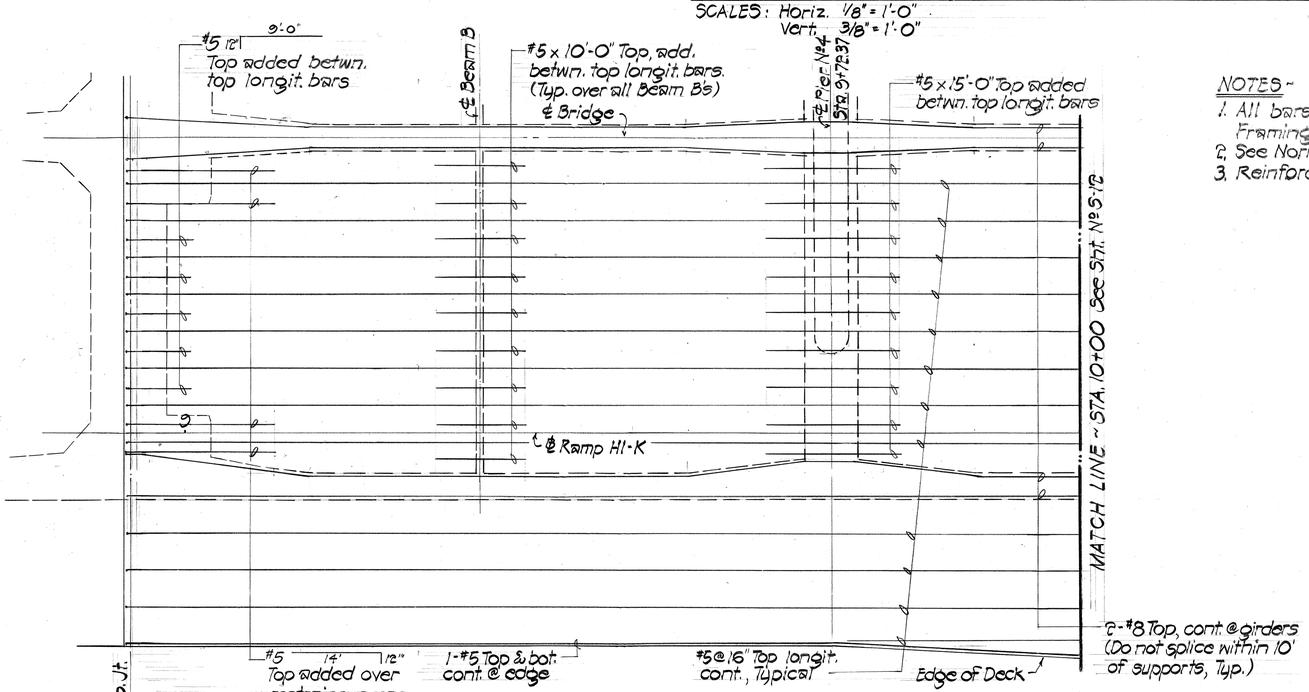

TOP SLAB STEEL PLACEMENT DIAGRAM (Top Layer Longit. Bars)

SCALES: Horiz. 1/8" = 1'-0"
Vert. 3/8" = 1'-0"

NOTES ~

1. All bars to follow curvature of girders. See Deck Framing Plan & Layout Plan for true curvature of deck.
2. See Normal Deck Section for remainder of slab reinf.
3. Reinforcing is symmetrical about ℄ bridge.

ORIGINAL PLAN		DATE
	SURVEY PLOTTED BY	
	TRACED BY	"
	DESIGNED BY	"
NOTE BOOK	QUANTITIES BY	"
No.	CHECKED BY	"

ENGINEERING DESIGN GROUP, INC.
Consulting Engineers
225 Queen St., Suite 504
Honolulu, Hawaii 96813

EDGAR K. M. LEE
REGISTERED PROFESSIONAL ENGINEER
No. 2150
HAWAII, U.S.A.

This work was prepared by me or under my supervision

STATE OF HAWAII
DEPARTMENT OF TRANSPORTATION
LAND TRANSPORTATION FACILITIES DIVISION

TOP SLAB STEEL PLACEMENT DIAGRAM ~ STA. 7+00 to STA. 10+00

INTERSTATE ROUTE H-1
KAPIOLANI INTERCHANGE ON-RAMP
F.A.I. PROJ. NO. I-H1-1(157):24

Scale: As Noted
Date: 4-10-80

SHEET No. S-11 OF S-41 SHEETS

FED. ROAD DIST. NO.	STATE	FED. AID PROJ. NO.	FISCAL YEAR	SHEET NO.	TOTAL SHEETS
HAWAII	HAW.	I-HI-I(157)-24	1979	79	146

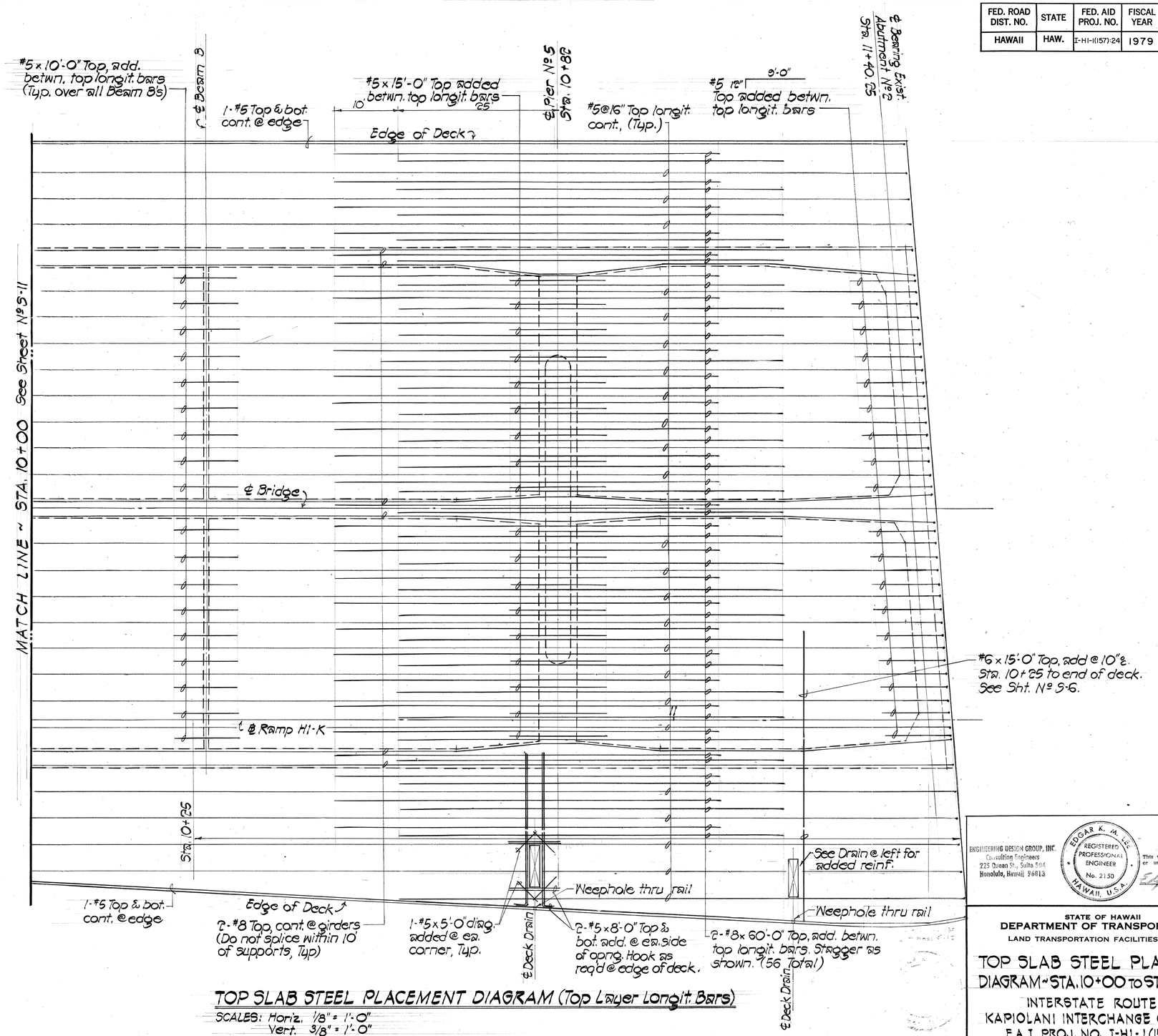

TOP SLAB STEEL PLACEMENT DIAGRAM (Top Layer Longit. Bars)

SCALES: Horiz. 1/8" = 1'-0"
Vert. 3/8" = 1'-0"

ORIGINAL PLAN	SURVEY PLOTTED BY	DATE
	DRAWN BY	"
	TRACED BY	"
NOTE BOOK	DESIGNED BY	"
	QUANTITIES BY	"
No.	CHECKED BY	"

ENGINEERING DESIGN GROUP, INC.
Consulting Engineers
225 Queen St., Suite 504
Honolulu, Hawaii 96813

EDGAR K. M. LEE
REGISTERED PROFESSIONAL ENGINEER
No. 2150
HAWAII, U.S.A.

This work was prepared by me or under my supervision

STATE OF HAWAII
DEPARTMENT OF TRANSPORTATION
LAND TRANSPORTATION FACILITIES DIVISION

TOP SLAB STEEL PLACEMENT DIAGRAM ~ STA. 10+00 TO STA. 11+40.25

INTERSTATE ROUTE H-1
KAPIOLANI INTERCHANGE ON-RAMP
F.A.I. PROJ. NO. I-H1-1(157):24

Scale: As Noted
Date: 4-10-80

SHEET No. S-12 OF S-41 SHEETS

FED. ROAD DIST. NO.	STATE	FED. AID PROJ. NO.	FISCAL YEAR	SHEET NO.	TOTAL SHEETS
HAWAII	HAW.	I-HI-1(157)-24	1979	80	146

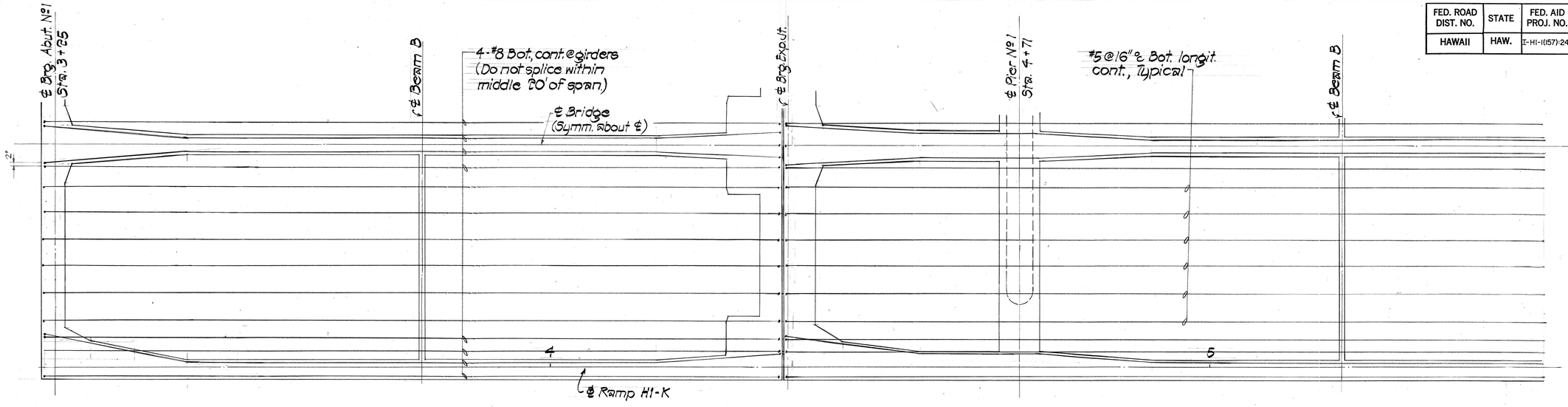

BOTTOM SLAB STEEL PLACEMENT DIAGRAM (Bot. Layer Longit. Bars)

SCALES: Horiz. 1/8" = 1'-0"
Vert. 3/8" = 1'-0"

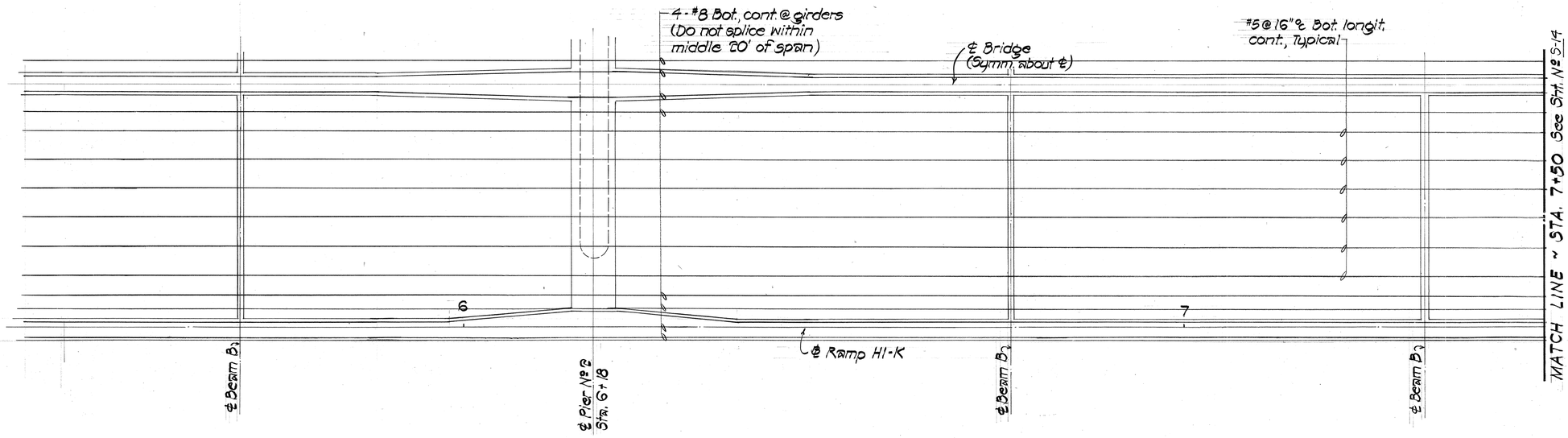

BOTTOM SLAB STEEL PLACEMENT DIAGRAM (Bot. Layer Longit. Bars)

SCALES: Horiz. 1/8" = 1'-0"
Vert. 3/8" = 1'-0"

NOTE:
See Notes on Sheet S-11.

ORIGINAL PLAN	SURVEY PLOTTED BY	DATE
	DRAWN BY	"
	TRACED BY	"
NOTE BOOK	DESIGNED BY	"
	QUANTITIES BY	"
No.	CHECKED BY	"

ENGINEERING DESIGN GROUP, INC.
Consulting Engineers
225 Queen St., Suite 504
Honolulu, Hawaii 96813

EDGAR K. M. LEE
REGISTERED PROFESSIONAL ENGINEER
No. 2150
HAWAII, U.S.A.

This work was prepared by me or under my supervision

STATE OF HAWAII
DEPARTMENT OF TRANSPORTATION
LAND TRANSPORTATION FACILITIES DIVISION

BOT. SLAB STEEL PLACEMENT DIAGRAM ~ STA. 3+25 TO STA. 7+50

INTERSTATE ROUTE H-1
KAPIOLANI INTERCHANGE ON-RAMP
F.A.I. PROJ. NO. I-HI-1(157): 24

Scale: As Noted
Date: 4-10-80

SHEET No. S-13 OF S-41 SHEETS

FED. ROAD DIST. NO.	STATE	FED. AID PROJ. NO.	FISCAL YEAR	SHEET NO.	TOTAL SHEETS
HAWAII	HAW.	I-HI-1(157)24	1979	81	146

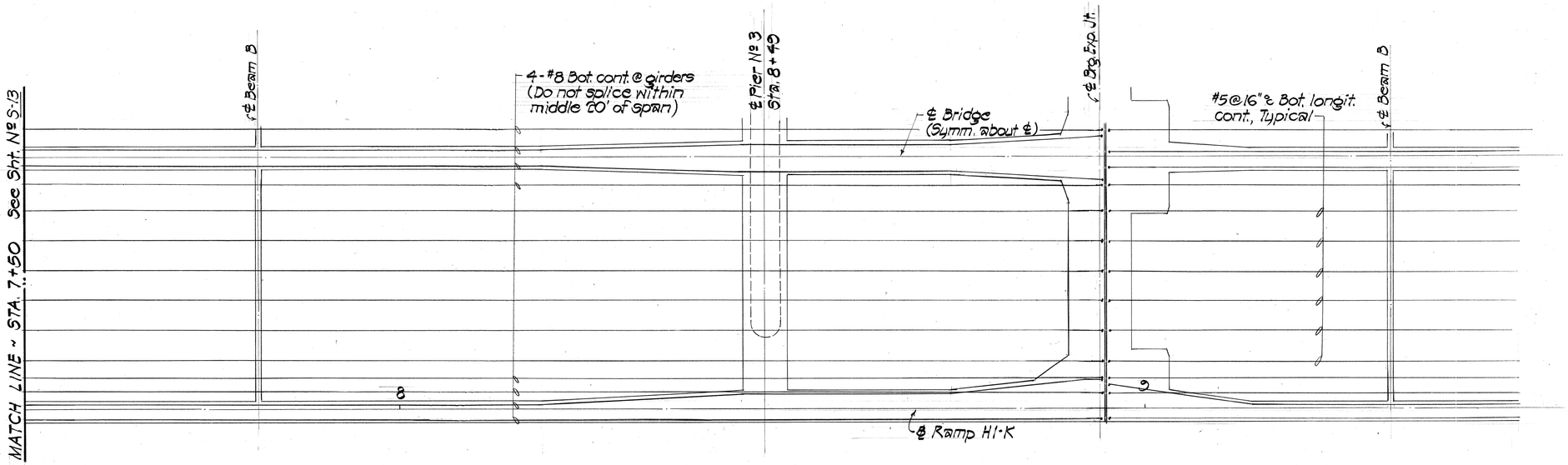

BOTTOM SLAB STEEL PLACEMENT DIAGRAM (Bot. Layer Longit. Bars)

SCALES: Horiz. 1/8" = 1'-0"
Vert. 3/8" = 1'-0"

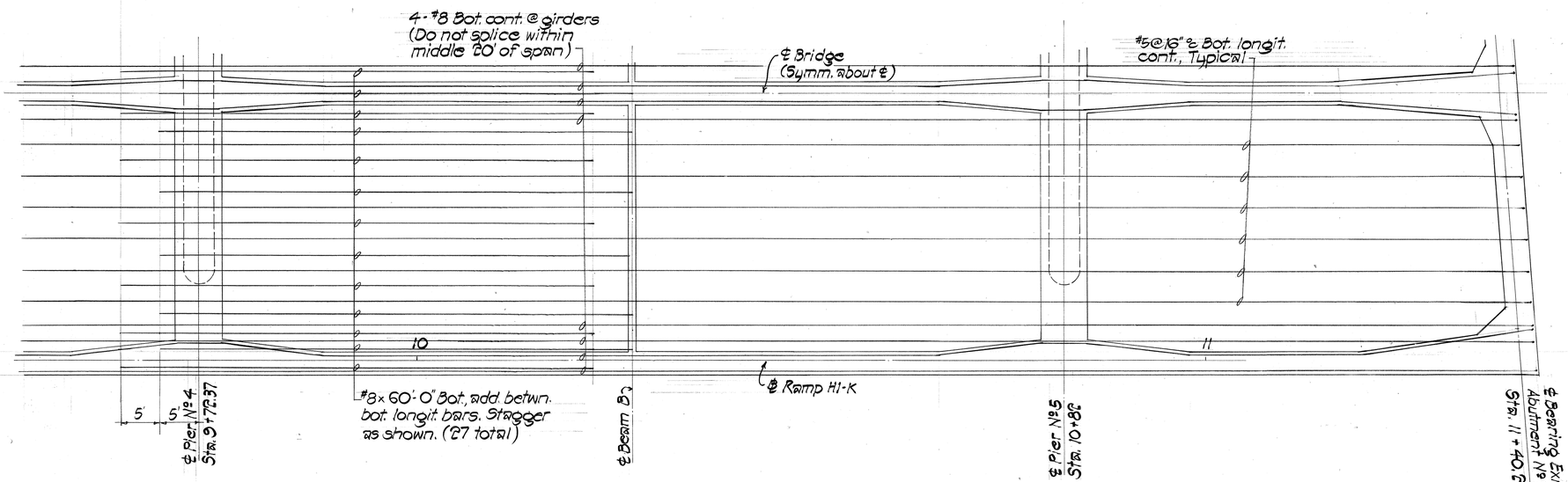

BOTTOM SLAB STEEL PLACEMENT DIAGRAM (Bot. Layer Longit. Bars)

SCALES: Horiz. 1/8" = 1'-0"
Vert. 3/8" = 1'-0"

ORIGINAL PLAN	SURVEY PLOTTED BY	DATE
	DRAWN BY	"
	TRACED BY	"
NOTE BOOK	DESIGNED BY	"
	QUANTITIES BY	"
No.	CHECKED BY	"

ENGINEERING DESIGN GROUP, INC.
Consulting Engineers
225 Queen St., Suite 504
Honolulu, Hawaii 96813

EDGAR K. M. LEE
REGISTERED PROFESSIONAL ENGINEER
No. 2150
HAWAII, U.S.A.

This work was prepared by me or under my supervision

STATE OF HAWAII
DEPARTMENT OF TRANSPORTATION
LAND TRANSPORTATION FACILITIES DIVISION

BOT. SLAB STEEL PLACEMENT DIAGRAM ~ STA. 7+50 TO STA. 11+40.25

INTERSTATE ROUTE H-1
KAPIOLANI INTERCHANGE ON-RAMP
F.A.I. PROJ. NO. I-H1-1(157):24

Scale: As Noted
Date: 4-10-80

SHEET No. S-14 OF S-41 SHEETS

FED. ROAD DIST. NO.	STATE	FED. AID PROJ. NO.	FISCAL YEAR	SHEET NO.	TOTAL SHEETS
HAWAII	HAW.	I-HI-1(157)24	1979	82	146

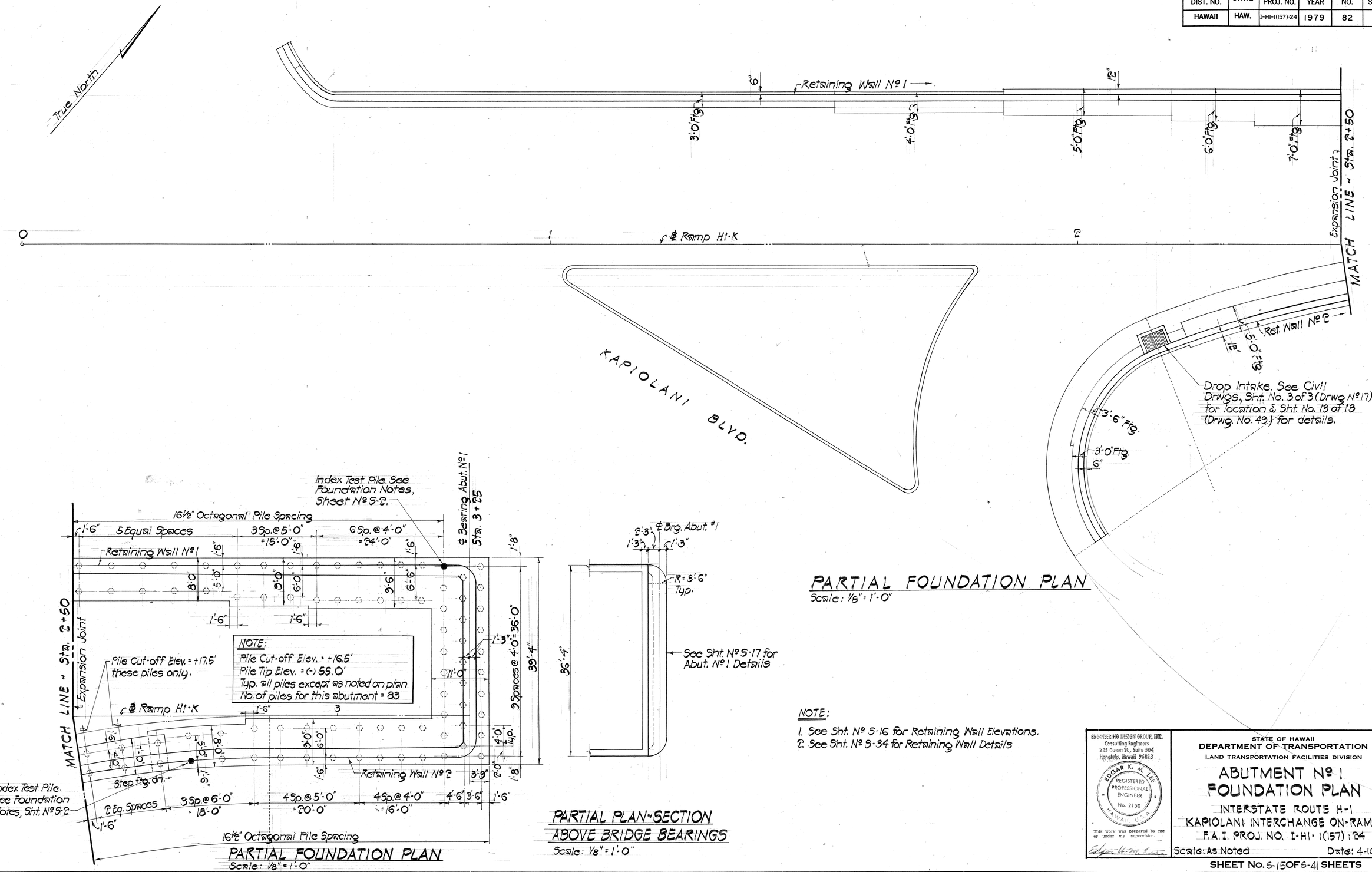

NOTE:

1. See Sht. No 5-16 for Retaining Wall Elevations.
2. See Sht. No 5-34 for Retaining Wall Details

ORIGINAL PLAN	SURVEY PLOTTED BY	DATE
	DRAWN BY	"
NOTE BOOK	TRACED BY	"
	DESIGNED BY	"
No.	QUANTITIES BY	"
	CHECKED BY	"

ENGINEERING DESIGN GROUP, INC.
Consulting Engineers
225 Queen St., Suite 504
Honolulu, Hawaii 96813

EDGAR K. M. LEE
REGISTERED PROFESSIONAL ENGINEER
No. 2150
HAWAII, U.S.A.

This work was prepared by me or under my supervision.

STATE OF HAWAII
DEPARTMENT OF TRANSPORTATION
LAND TRANSPORTATION FACILITIES DIVISION

ABUTMENT No 1 FOUNDATION PLAN

INTERSTATE ROUTE H-1
KAPIOLANI INTERCHANGE ON-RAMP
F.A.I. PROJ. NO. I-H1-1(157):24

Scale: As Noted
Date: 4-10-80

SHEET No. 5-15 OF 5-41 SHEETS

FED. ROAD DIST. NO.	STATE	FED. AID PROJ. NO.	FISCAL YEAR	SHEET NO.	TOTAL SHEETS
HAWAII	HAW.	I-HI-1(157)24	1979	83	146

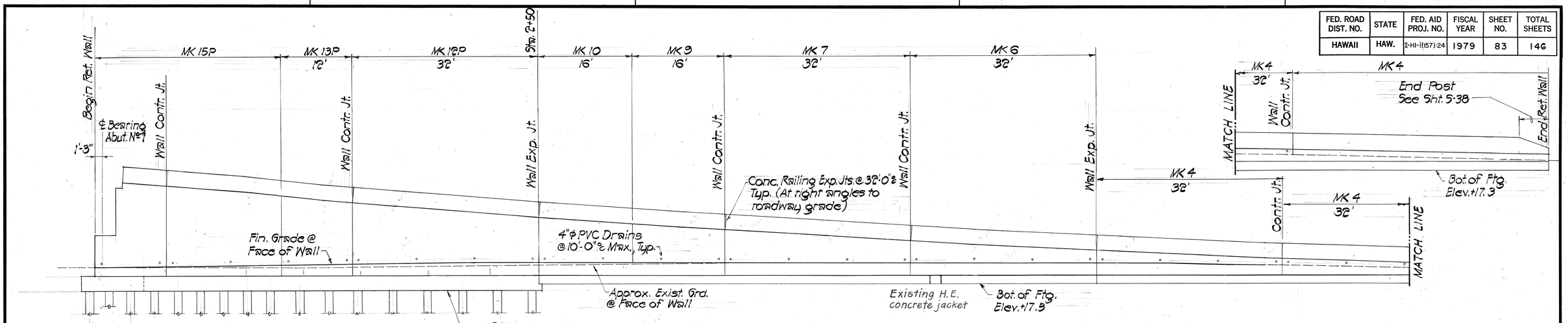

ELEVATION ~ RETAINING WALL No 1

Scale: 1/8" = 1'-0"

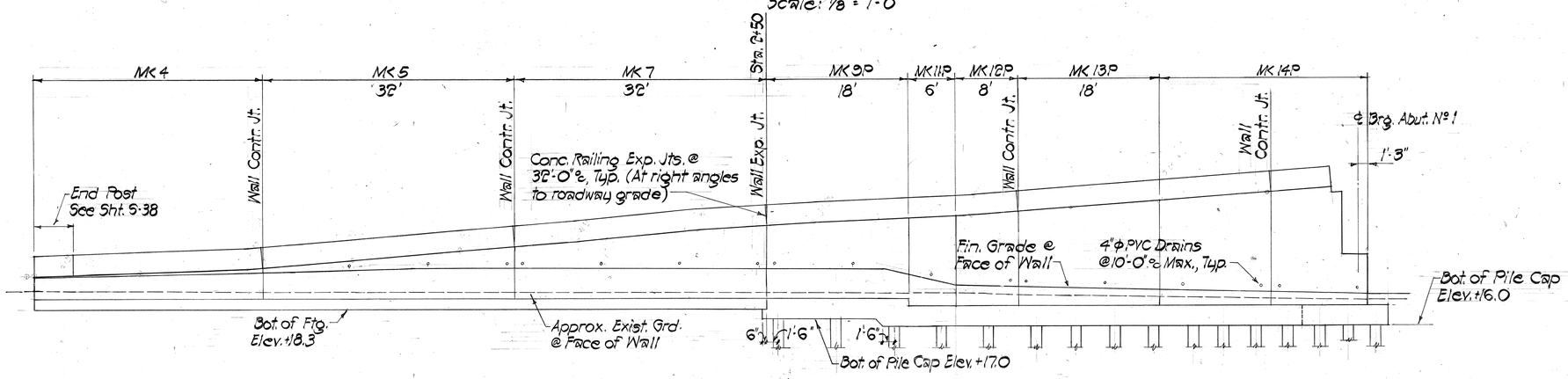

ELEVATION ~ RETAINING WALL No 2

Scale: 1/8" = 1'-0"

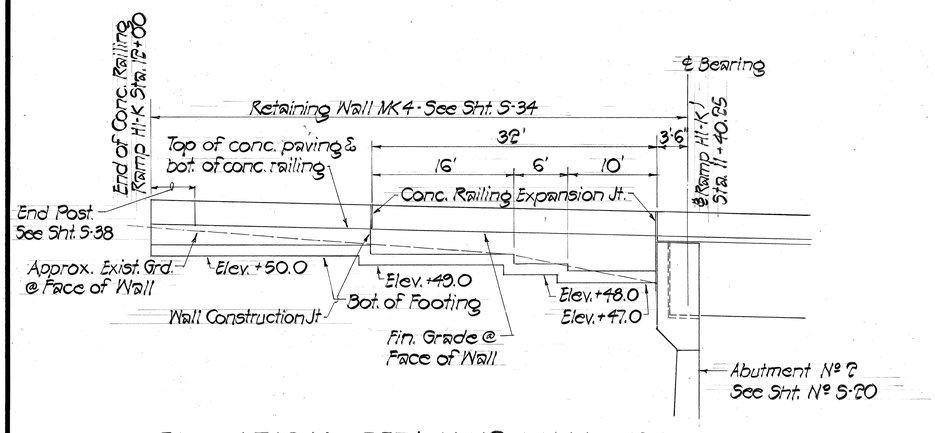

ELEVATION ~ RETAINING WALL No 3

Scale: 1/8" = 1'-0"

ORIGINAL PLAN	SURVEY PLOTTED BY	DATE
	DRAWN BY	"
	TRACED BY	"
NOTE BOOK	DESIGNED BY	"
	QUANTITIES BY	"
No.	CHECKED BY	"

ENGINEERING DESIGN GROUP, INC.
Consulting Engineers
225 Queen St., Suite 504
Honolulu, Hawaii 96813

EDGAR K. M. LEE
REGISTERED PROFESSIONAL ENGINEER
No. 2130
HAWAII

This work was prepared by me or under my supervision.

STATE OF HAWAII
DEPARTMENT OF TRANSPORTATION
LAND TRANSPORTATION FACILITIES DIVISION

ABUTMENT No 1 & 2 RETAINING WALL ELEVATIONS

INTERSTATE ROUTE H-1
KAPIOLANI INTERCHANGE ON-RAMP
F.A.I. PROJ. NO. I-H1-1 (157); 24

Scale: As Noted
Date: 4-10-80

SHEET No. S-16 OF S-41 SHEETS

FED. ROAD DIST. NO.	STATE	FED. AID PROJ. NO.	FISCAL YEAR	SHEET NO.	TOTAL SHEETS
HAWAII	HAW.	I-HI-1(157)24	1979	84	146

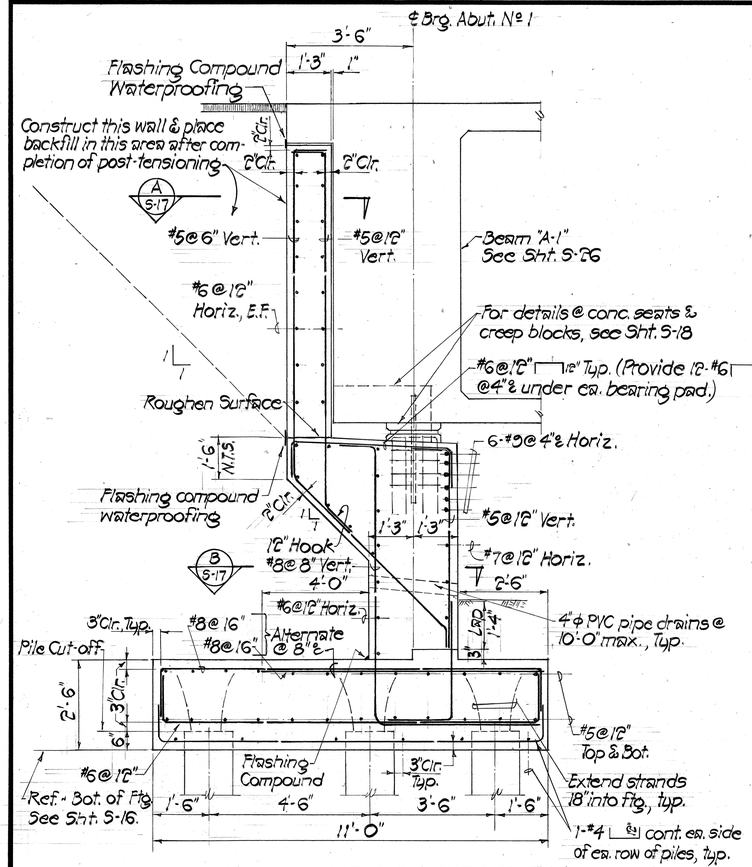

TYP. ABUTMENT Nº 1 SECTION

Scale: 1/2" = 1'-0"

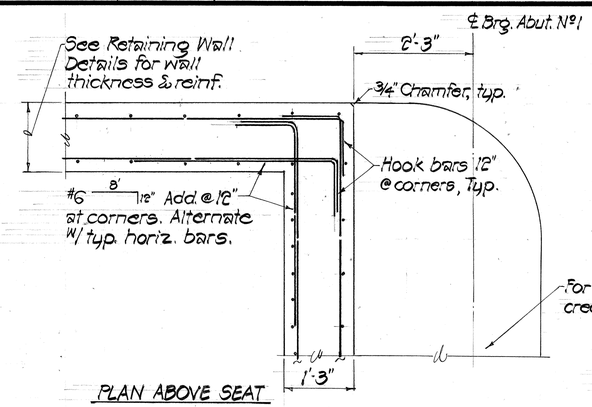

PLAN ABOVE SEAT

SECTION A 5-17

Scale: 3/4" = 1'-0"

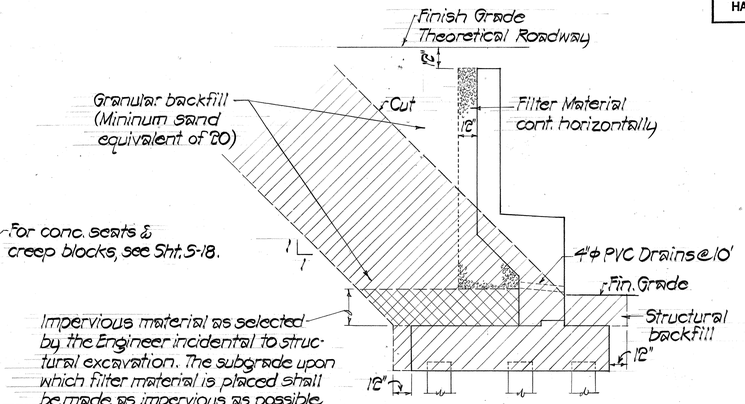

Impervious material as selected by the Engineer incidental to structural excavation. The subgrade upon which filter material is placed shall be made as impervious as possible by pneumatic tamping or other approved methods. Impervious material shall be incidental to roadway excavation or imported borrow when used in embankment area.

STRUCTURAL EXCAVATION & DRAINAGE DETAILS

No Scale

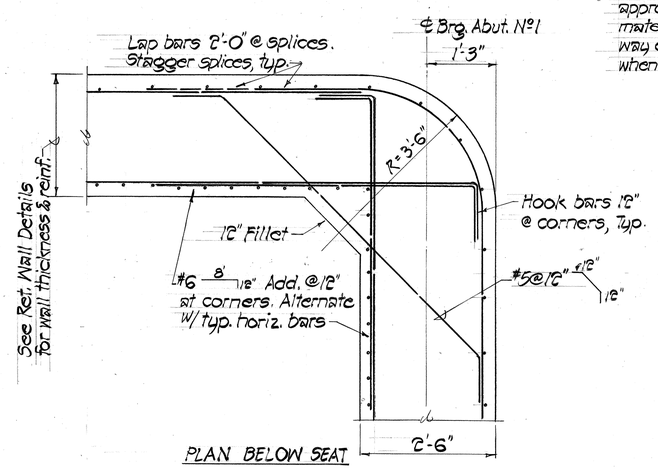

PLAN BELOW SEAT

SECTION B 5-17

Scale: 3/4" = 1'-0"

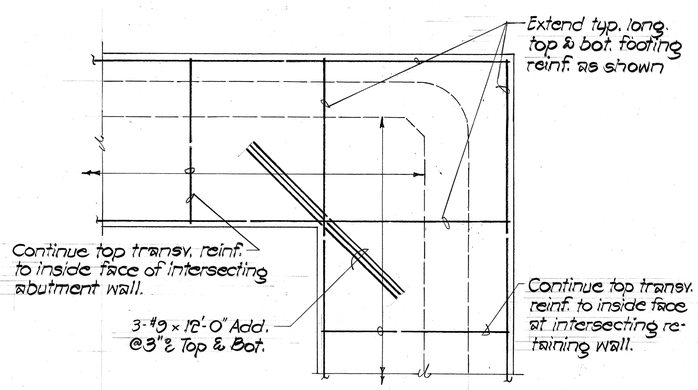

PLAN - INTERSECTION AT RETAINING WALL FOOTING AND ABUTMENT FOOTING

Scale: 1/4" = 1'-0"

ORIGINAL PLAN		DATE
	SURVEY PLOTTED BY	
	DRAWN BY	"
	TRACED BY	"
NOTE BOOK	DESIGNED BY	"
	QUANTITIES BY	"
No.	CHECKED BY	"

ENGINEERING DESIGN GROUP, INC.
Consulting Engineers
225 Queen St., Suite 504
Honolulu, Hawaii 96813

EDGAR K. M. LEE
REGISTERED PROFESSIONAL ENGINEER
No. 2150
HAWAII, U.S.A.

This work was prepared by me or under my supervision

STATE OF HAWAII
DEPARTMENT OF TRANSPORTATION
LAND TRANSPORTATION FACILITIES DIVISION

ABUTMENT Nº 1 SECTIONS & DETAILS

INTERSTATE ROUTE H-1
KAPIOLANI INTERCHANGE ON-RAMP
F.A.I. PROJ. NO. I-H1-1(157):24

Scale: As Noted — Date: 4-10-80

SHEET No. S-17 OF S-41 SHEETS

FED. ROAD DIST. NO.	STATE	FED. AID PROJ. NO.	FISCAL YEAR	SHEET NO.	TOTAL SHEETS
HAWAII	HAW.	I-HI-1(157)24	1979	85	146

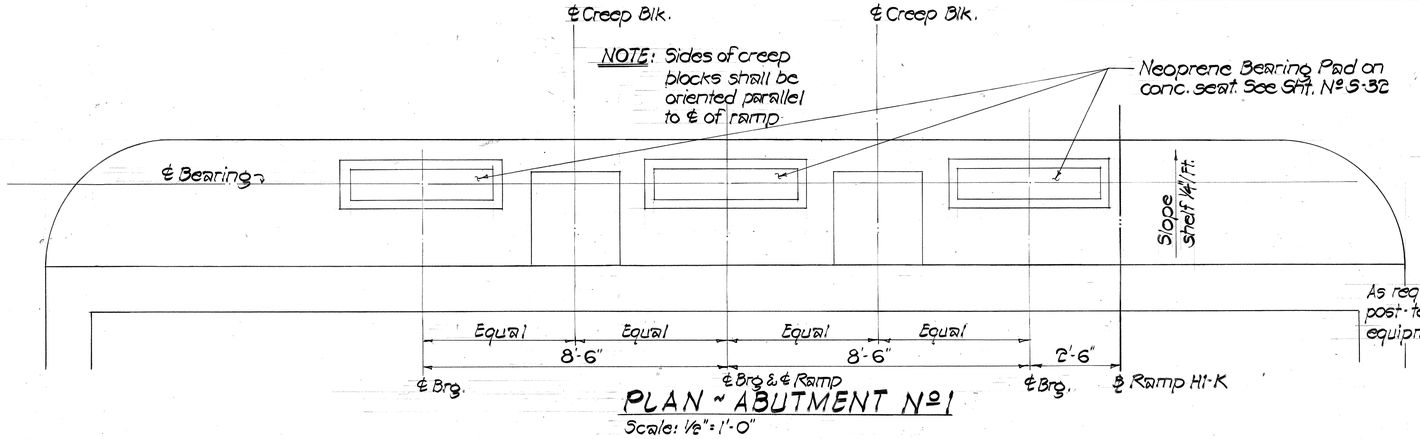

PLAN ~ ABUTMENT No. 1

Scale: 1/2" = 1'-0"

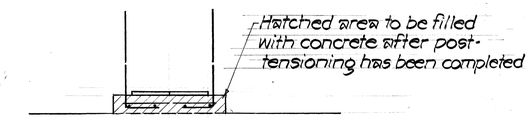

PLAN ~ SECTION B/S-18

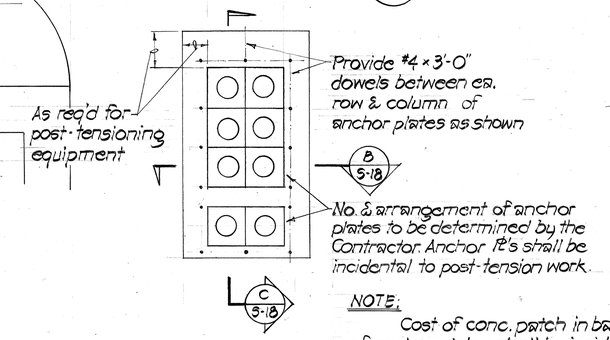

ELEVATION

NOTE:
Cost of conc. patch in back of anchor plates shall be incidental to concrete work.

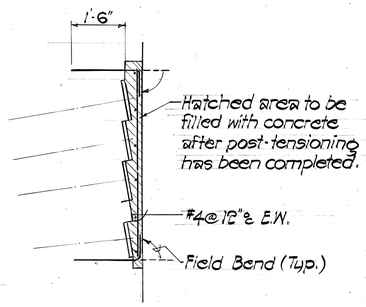

SECTION C/S-18

TYP. BLOCKOUT DETAIL @ POST-TENSIONING ANCHORS

Scale: 1/2" = 1'-0"

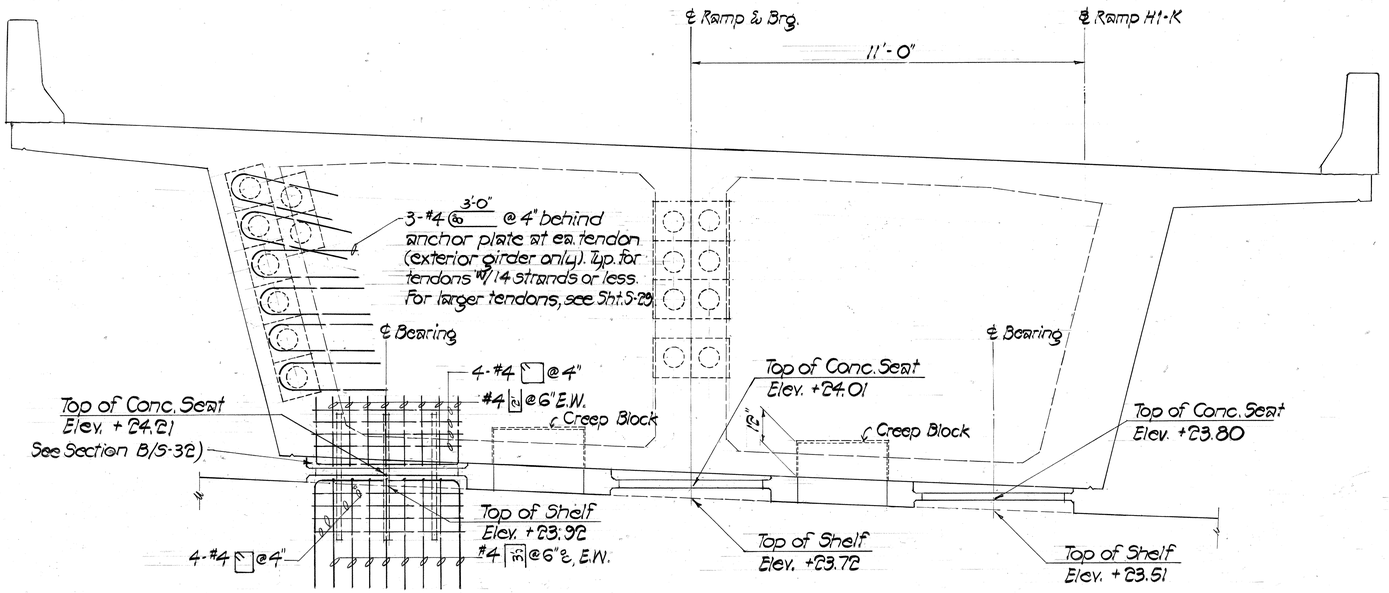

ELEVATION ~ ABUTMENT No. 1

Scale: 1/2" = 1'-0"

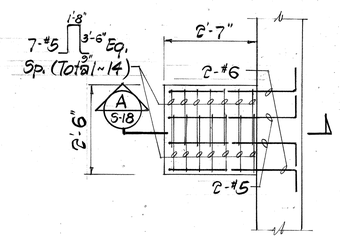

PLAN ~ CREEP BLOCK

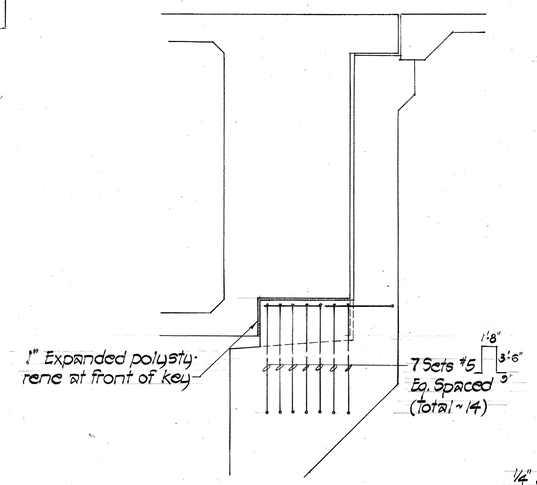

SECTION A/S-18

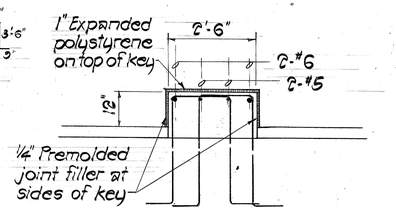

FRONT ELEVATION

TYPICAL CREEP BLOCK DETAIL

Scale: 1/2" = 1'-0"

ORIGINAL PLAN	SURVEY PLOTTED BY	DATE
	DRAWN BY	"
	TRACED BY	"
NOTE BOOK	DESIGNED BY	"
	QUANTITIES BY	"
No.	CHECKED BY	"

ENGINEERING DESIGN GROUP, INC.
Consulting Engineers
225 Queen St., Suite 504
Honolulu, Hawaii 96813

EDGAR K. M. LEE
REGISTERED PROFESSIONAL ENGINEER
No. 2130
HAWAII, U.S.A.

This work was prepared by me or under my supervision.

STATE OF HAWAII
DEPARTMENT OF TRANSPORTATION
LAND TRANSPORTATION FACILITIES DIVISION

TYPICAL ABUTMENT PLAN & ELEVATION

INTERSTATE ROUTE H-1
KAPIOLANI INTERCHANGE ON-RAMP
F.A.I. PROJ. NO. I-H1-1(157):24

Scale: As Noted
Date: 4-10-80

SHEET No. S-18 OF S-41 SHEETS

FED. ROAD DIST. NO.	STATE	FED. AID PROJ. NO.	FISCAL YEAR	SHEET NO.	TOTAL SHEETS
HAWAII	HAW.	I-HI-1(157)-24	1979	86	146

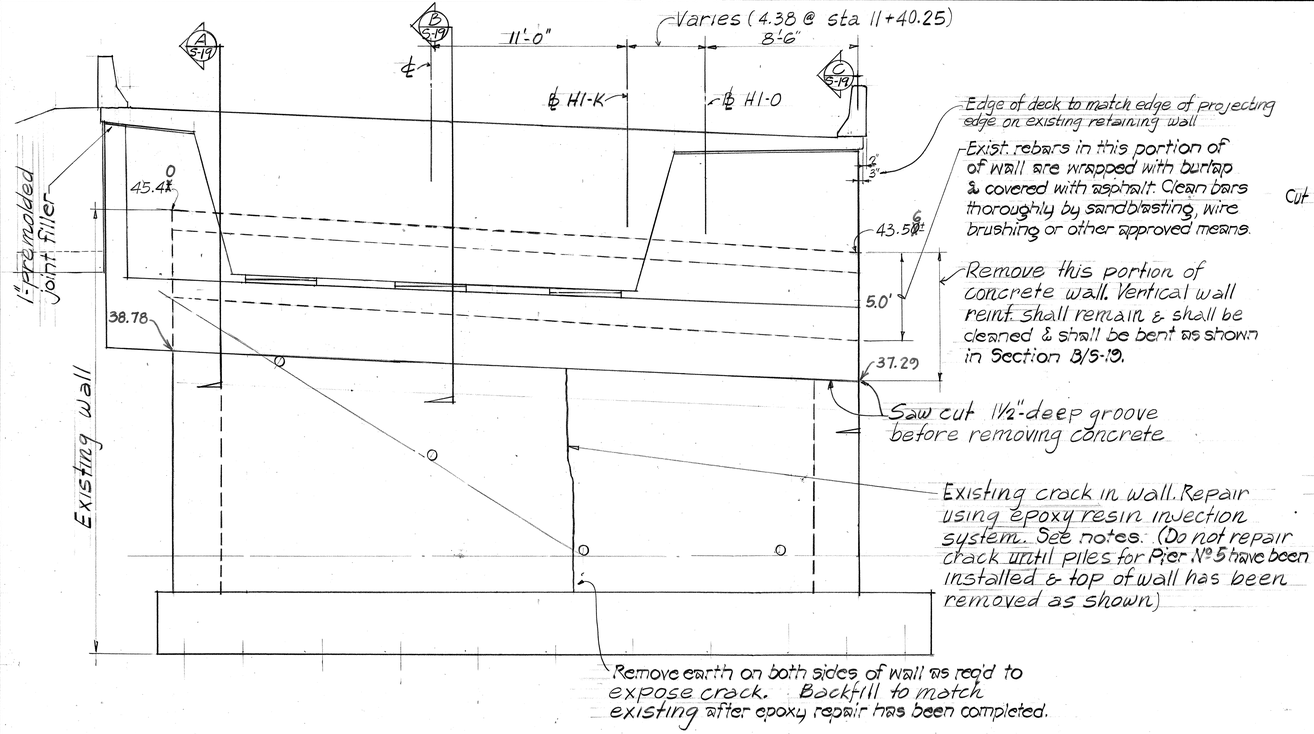

ELEVATION OF EXISTING ABUTMENT AT STA 11+40.25
1/4" = 1'-0"

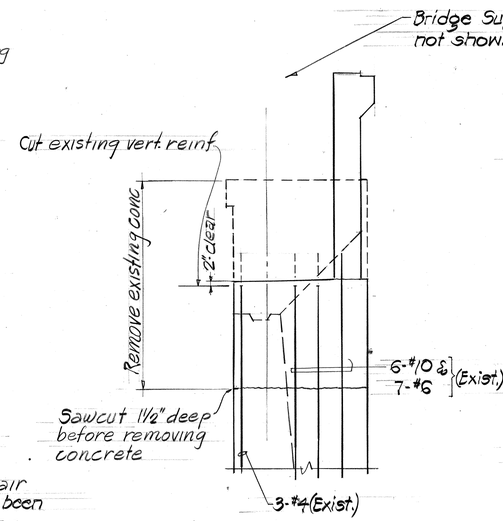

SECTION A S-19
3/8" = 1'-0"

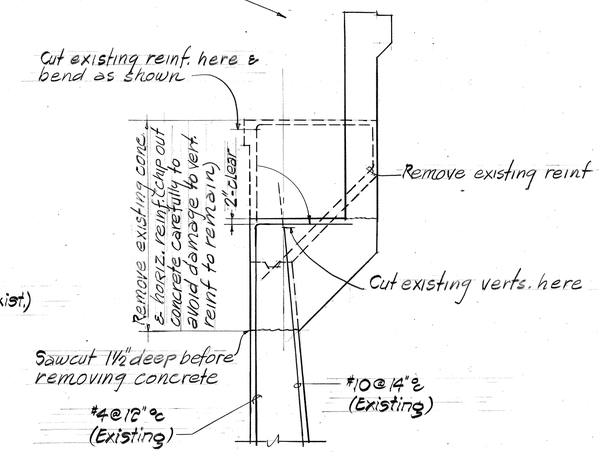

SECTION B S-19
3/8" = 1'-0"

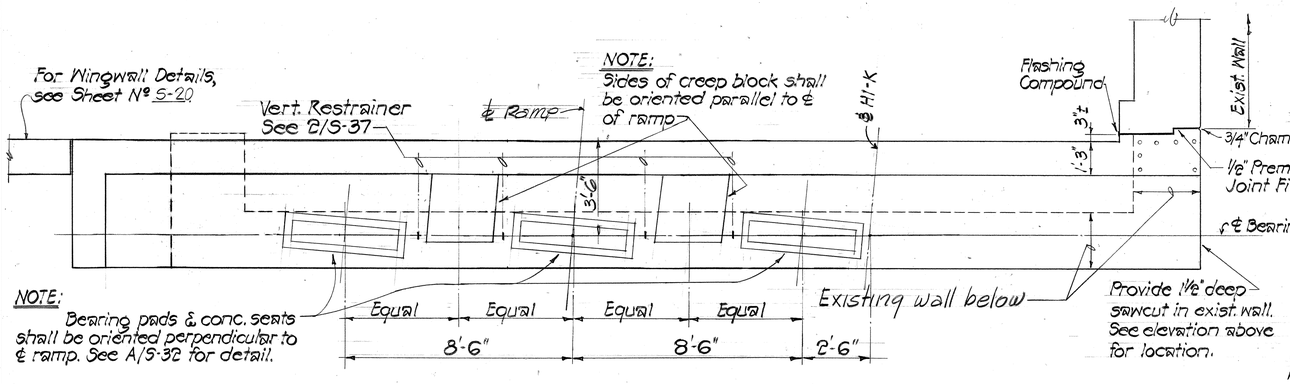

TOP PLAN ~ ABUTMENT Nº 2
3/8" = 1'-0"

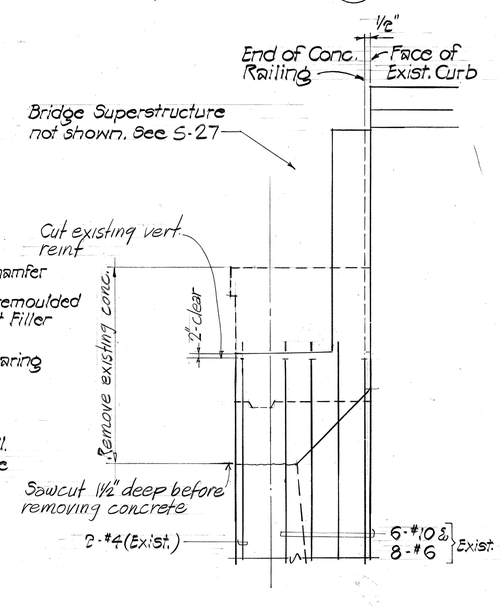

SECTION C S-19
3/8" = 1'-0"

EPOXY RESIN INJECTION SYSTEM NOTES ~

Epoxy crack repair shall be by the epoxy (two compound) resin injection system. The injection equipment shall be capable of maintaining an injection pressure of 125 psi.

Prior to epoxy injection, clean cracks of all loose matter such as dirt and remove any oil, grease or other contaminants. Flush cracks with water to further remove any dust or debris. Then provide a surface seal over the face of the cracks. Provide entry ports in the surface seal approximately 24" on centers.

Inject epoxy into cracks at the lowest possible pressure starting at the lowest entry port and continue injection until the epoxy flows out of next highest port. Then plug first port and start injection at second port. Proceed up the crack in the same manner.

Provide one core sample taken where directed by the Engineer. If tests show that unsatisfactory bonding has occured, the work shall be corrected to the Engineer's satisfaction. Core holes shall be patched with a epoxy grout.

Provide complete details of the equipment, materials & methods to be used for final review by the Engineer.

Cost of the epoxy injection & core samples shall be incidental to the concrete work.

ORIGINAL PLAN	SURVEY PLOTTED BY	DATE
	DRAWN BY	
	TRACED BY	
NOTE BOOK	DESIGNED BY	
No.	QUANTITIES BY	
	CHECKED BY	

ENGINEERING DESIGN GROUP, INC.
Consulting Engineers
225 Queen St., Suite 504
Honolulu, Hawaii 96813
EDGAR K. M. LEE
REGISTERED PROFESSIONAL ENGINEER
No. 2150
HAWAII, U.S.A.
This work was prepared by me or under my supervision

STATE OF HAWAII
DEPARTMENT OF TRANSPORTATION
LAND TRANSPORTATION FACILITIES DIVISION

ABUTMENT Nº 2 PLAN, ELEVATION & SECTIONS

INTERSTATE ROUTE H-1
KAPIOLANI INTERCHANGE ON-RAMP
F.A.I. PROJ. NO. I-HI-1(157):24

Scale: As Noted — Date: 4-10-80

SHEET No. S-19 OF S-41 SHEETS

FED. ROAD DIST. NO.	STATE	FED. AID PROJ. NO.	FISCAL YEAR	SHEET NO.	TOTAL SHEETS
HAWAII	HAW.	I-HI-1(157):24	1979	87	146

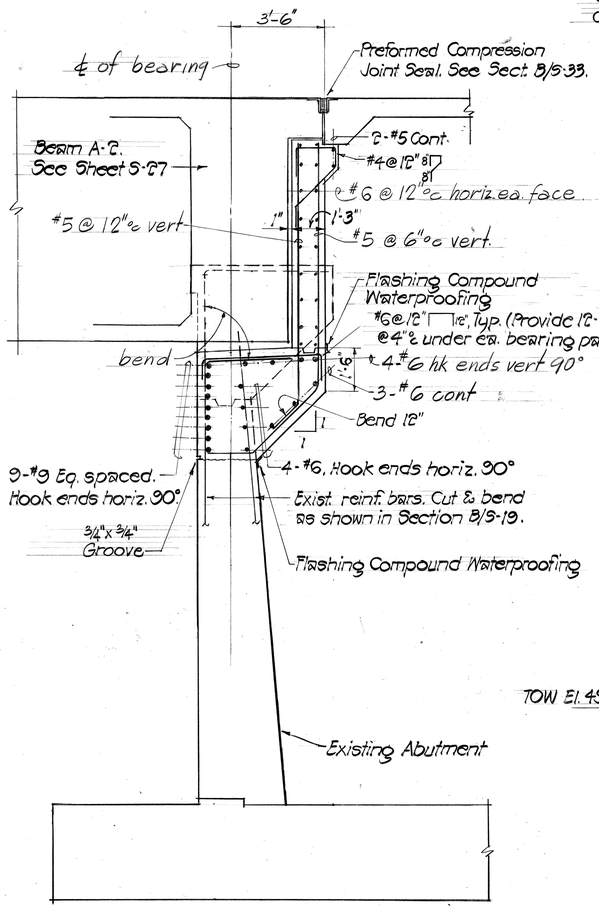

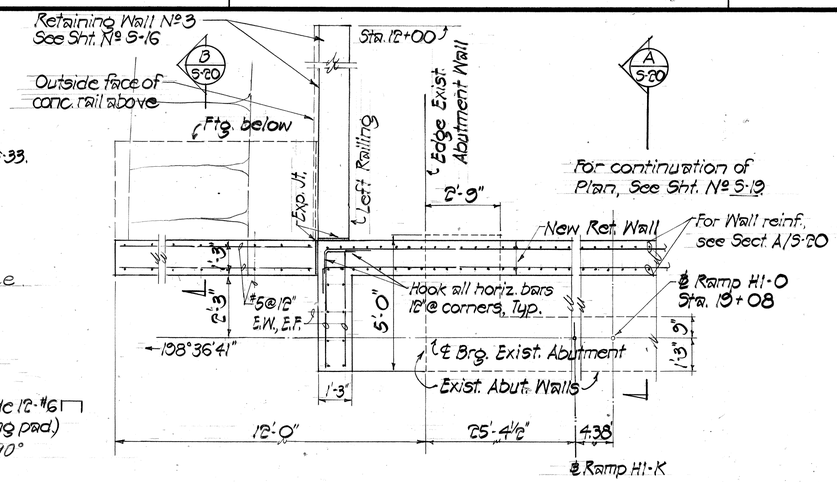

PLAN AT EXIST. ABUTMENT

Scale: 3/8" = 1'-0"

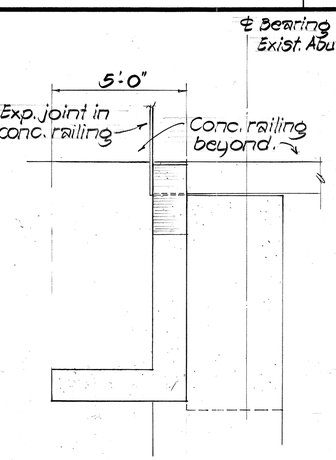

WINGWALL ELEVATION

Scale: 3/8" = 1'-0"

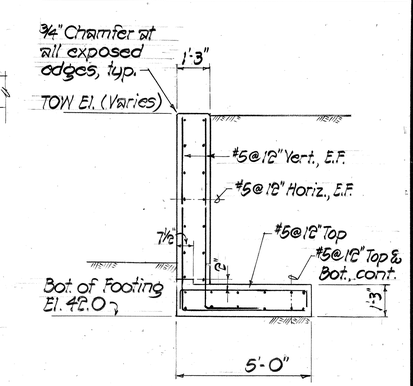

SECTION B/S-20

Scale: 3/8" = 1'-0"

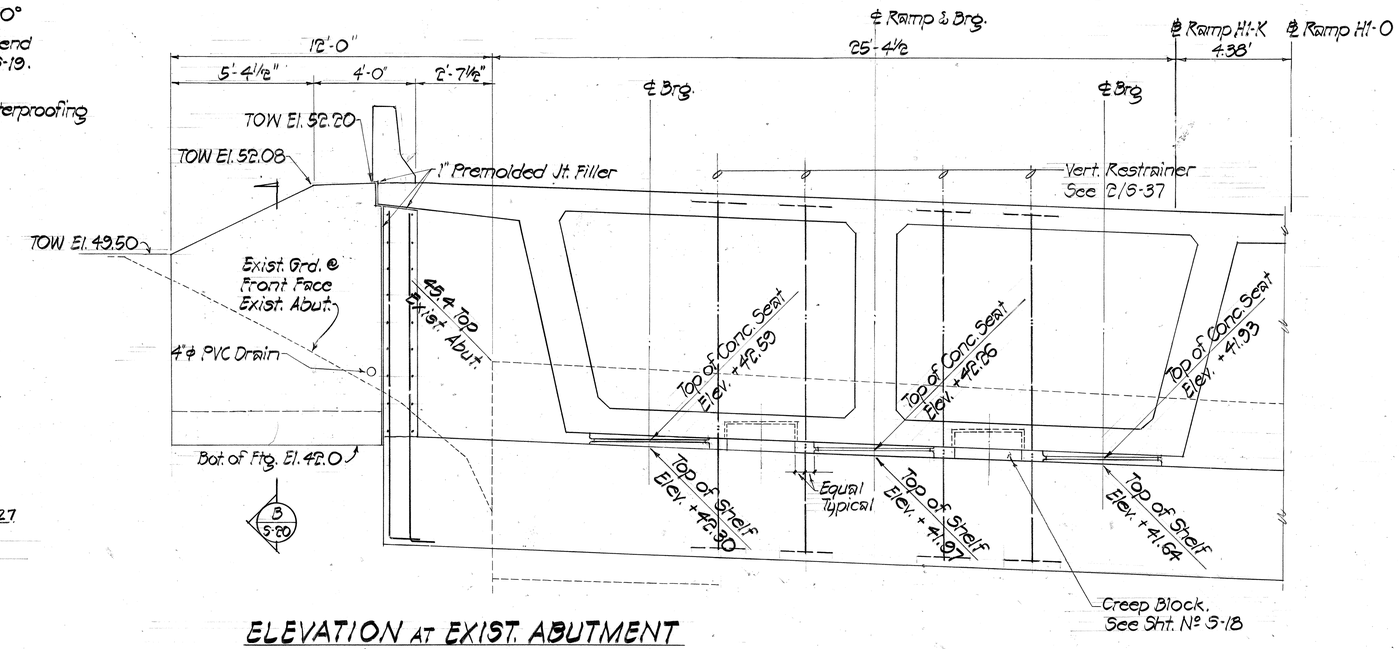

ELEVATION AT EXIST. ABUTMENT

Scale: 3/8" = 1'-0"

NOTE:
For dimensions & details not noted, see S-27

SECTION A/S-20

Scale: 3/8" = 1'-0"

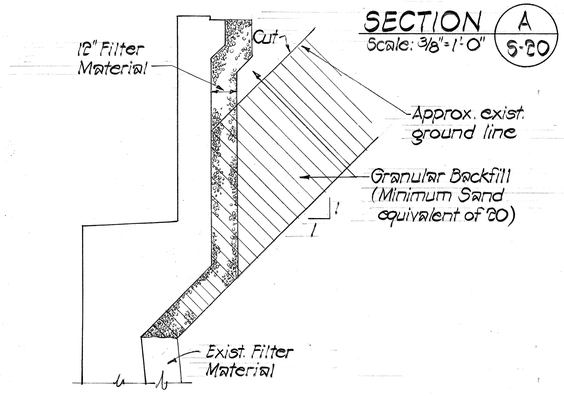

LIMITS OF STRUCTURAL EXCAVATION & BACKFILL

ORIGINAL PLAN	SURVEY PLOTTED BY	DATE
	DRAWN BY	
	TRACED BY	
NOTE BOOK	DESIGNED BY	
No.	QUANTITIES BY	
	CHECKED BY	

ENGINEERING DESIGN GROUP, INC.
Consulting Engineers
225 Queen St., Suite 504
Honolulu, Hawaii 96813

EDGAR K. M. LEE
REGISTERED PROFESSIONAL ENGINEER
No. 2150
HAWAII U.S.A.

This work was prepared by me or under my supervision

STATE OF HAWAII
DEPARTMENT OF TRANSPORTATION
LAND TRANSPORTATION FACILITIES DIVISION

ABUTMENT Nº 2 SECTIONS & DETAILS

INTERSTATE ROUTE H-1
KAPIOLANI INTERCHANGE ON-RAMP
F.A.I. PROJ. NO. I-H1-1(157):24

Scale: As Noted — Date: 4-10-80

SHEET No. S-20 OF S-41 SHEETS

FED. ROAD DIST. NO.	STATE	FED. AID PROJ. NO.	FISCAL YEAR	SHEET NO.	TOTAL SHEETS
HAWAII	HAW.	I-HI-1(157)-24	1979	88	146

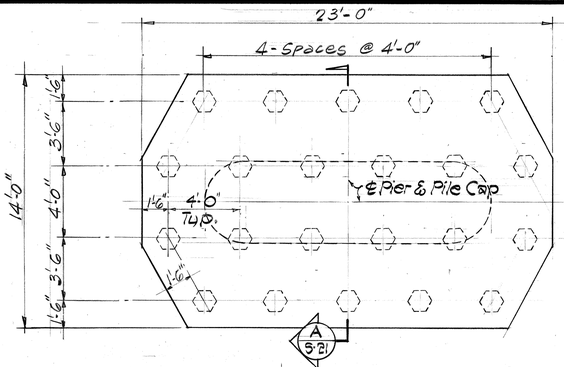

PLAN ~ TYPE I PILE CAP
Scale: 1/4" = 1'-0"

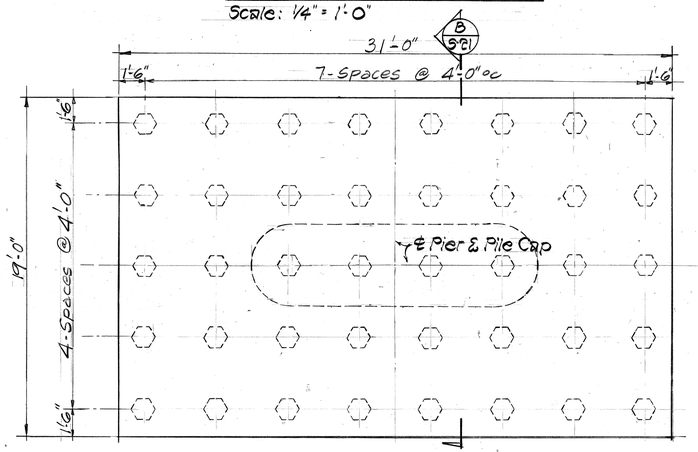

PLAN ~ TYPE II PILE CAP
Scale: 1/4" = 1'-0"

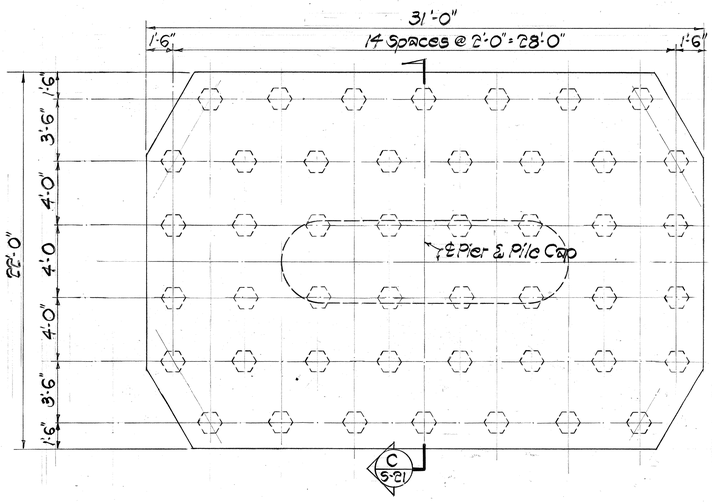

PLAN ~ TYPE III PILE CAP
Scale: 1/4" = 1'-0"

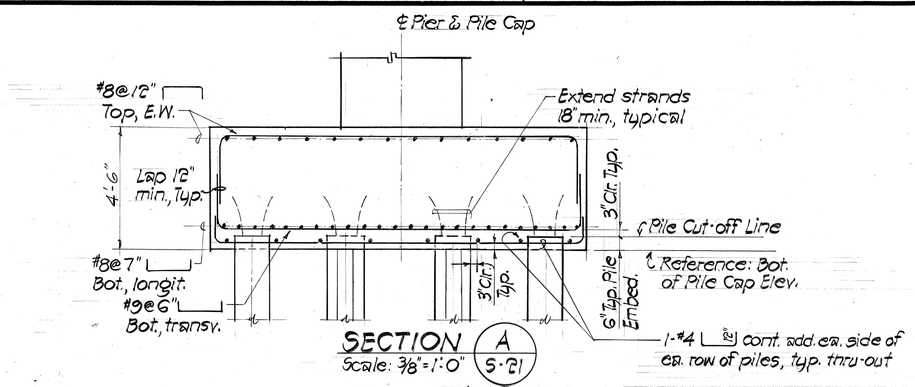

SECTION A
Scale: 3/8" = 1'-0" (S-21)

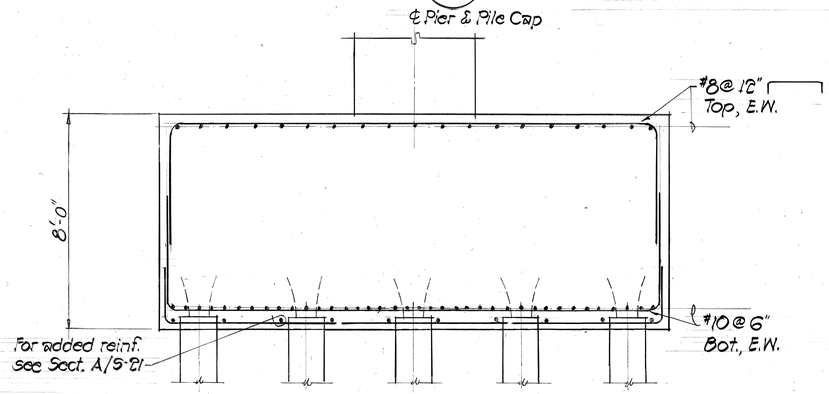

SECTION B
Scale: 3/8" = 1'-0" (S-21)

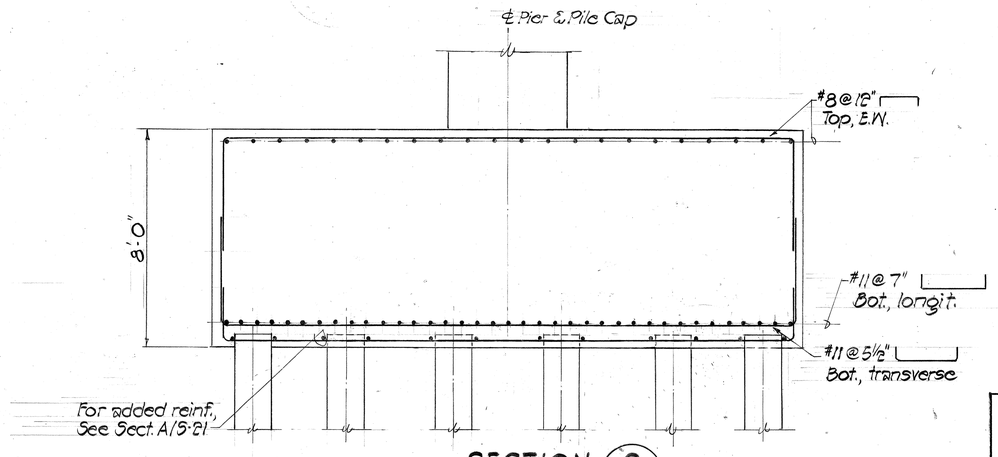

SECTION C
Scale: 3/8" = 1'-0" (S-21)

NOTE:
1. For Pier Details, see Sht. No. S-22
2. For Pile Details, see Std. Det. Sht. DB-300.

ENGINEERING DESIGN GROUP, INC.
Consulting Engineers
225 Queen St., Suite 506
Honolulu, Hawaii 96813

EDGAR K. M. LEE
REGISTERED PROFESSIONAL ENGINEER
No. 2150
HAWAII, U.S.A.

This work was prepared by me or under my supervision

STATE OF HAWAII
DEPARTMENT OF TRANSPORTATION
LAND TRANSPORTATION FACILITIES DIVISION

PILE CAP PLANS & SECTIONS

INTERSTATE ROUTE H-1
KAPIOLANI INTERCHANGE ON-RAMP
F.A.I. PROJ. NO. I-HI-1(157):24

Scale: As Noted
Date: 4-10-80

SHEET No. S-21 OF S-41 SHEETS

ORIGINAL PLAN	SURVEY PLOTTED BY	DATE
	DRAWN BY	"
	TRACED BY	"
NOTE BOOK	DESIGNED BY	"
No.	QUANTITIES BY	"
	CHECKED BY	"

FED. ROAD DIST. NO.	STATE	FED. AID PROJ. NO.	FISCAL YEAR	SHEET NO.	TOTAL SHEETS
HAWAII	HAW.	I-HI-1(157):24	1979	89	146

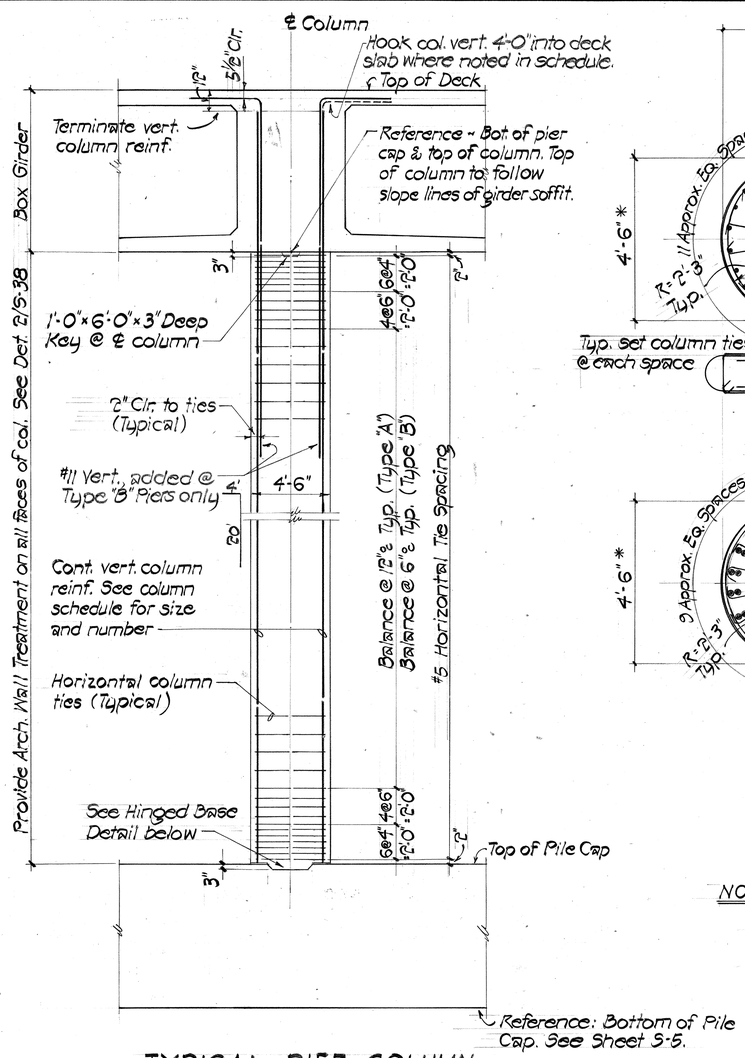

TYPICAL PIER COLUMN

Scale: 1/4" = 1'-0"

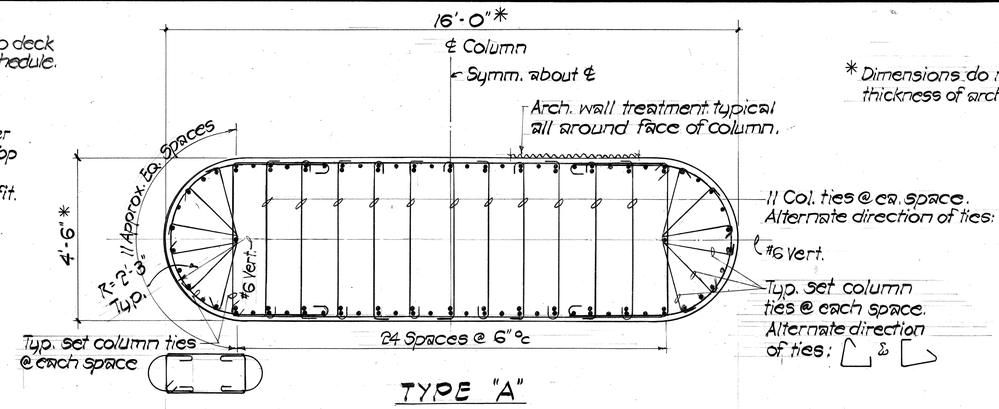

TYPE "A"

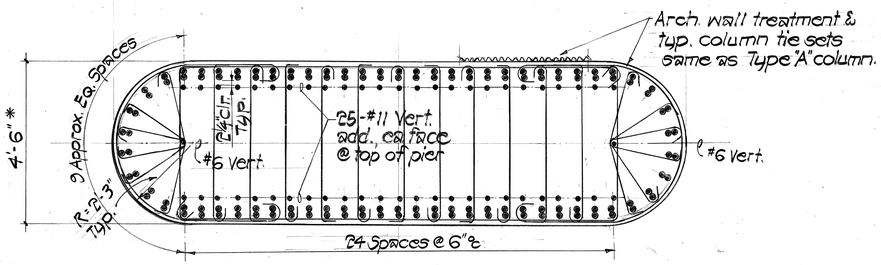

TYPE "B"

TYPICAL PIER COLUMN SECTIONS

Scale: 1/2" = 1'-0"

NOTE:

1. Bundle vert. bars as shown.
2. Locate vert. bars to clear pier cap reinf. See Sect. A/S-25.
3. All column ties to be #5.
4. Cost of arch wall treatment shall be incidental to concrete work.

~PIER COLUMN SCHEDULE~

PIER Nº's ~	Pier Nº1	Pier Nº2	Pier Nº3	Pier Nº4	Pier Nº5
Reference Top of Deck & Pier Cap				4"	4" Hook 25 bars ea. face, ea. pier column (Pier 4 & 5 only)
Bottom of Pier Cap					
Top of Col. Elev.	El. + 35.91	El. + 43.94	El. + 44.79	El. + 42.95	El. + 42.46
Column Type & Vert. Reinforcement	Type "B" Section 132-#18 Vertical Add 50-#11 Vertical	Type "B" Section 132-#18 Vertical Add 50-#11 Vertical	Type "B" Section 132-#18 Vertical Add 50-#11 Vertical	Type "A" Section 96-#11 Vertical	Type "A" Section 96-#11 Vertical
Top of Pile Cap					
Reference Bottom of Pile Cap					
PILE CAP TYPE ~	Type II	Type III	Type III	Type I	Type I

NOTE: For Pile Cap Details, see Sheet S-21.
For Bot. of Pile Cap Elev., see Sheet S-5.

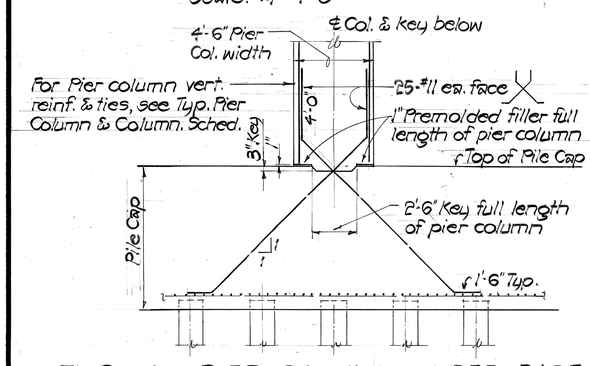

TYPICAL PIER COLUMN HINGED BASE DETAIL

Scale: 1/4" = 1'-0"

ORIGINAL PLAN	SURVEY PLOTTED BY	DATE
	DRAWN BY	"
	TRACED BY	"
NOTE BOOK	DESIGNED BY	"
	QUANTITIES BY	"
No.	CHECKED BY	"

ENGINEERING DESIGN GROUP, INC.
Consulting Engineers
225 Queen St., Suite 504
Honolulu, Hawaii 96813

EDGAR K. M. LEE
REGISTERED PROFESSIONAL ENGINEER
No. 2150
HAWAII, U.S.A.

This work was prepared by me or under my supervision.

STATE OF HAWAII
DEPARTMENT OF TRANSPORTATION
LAND TRANSPORTATION FACILITIES DIVISION

TYPICAL PIER COLUMN, SECTIONS & SCHEDULE

INTERSTATE ROUTE H-1
KAPIOLANI INTERCHANGE ON-RAMP
F.A.I. PROJ. NO. I-H1-1(157):24

Scale: As Noted — Date: 4-10-80

SHEET No. S-22 OF S-41 SHEETS

FED. ROAD DIST. NO.	STATE	FED. AID PROJ. NO.	FISCAL YEAR	SHEET NO.	TOTAL SHEETS
HAWAII	HAW.	I-HI-1(157):24	1979	89S-1	146

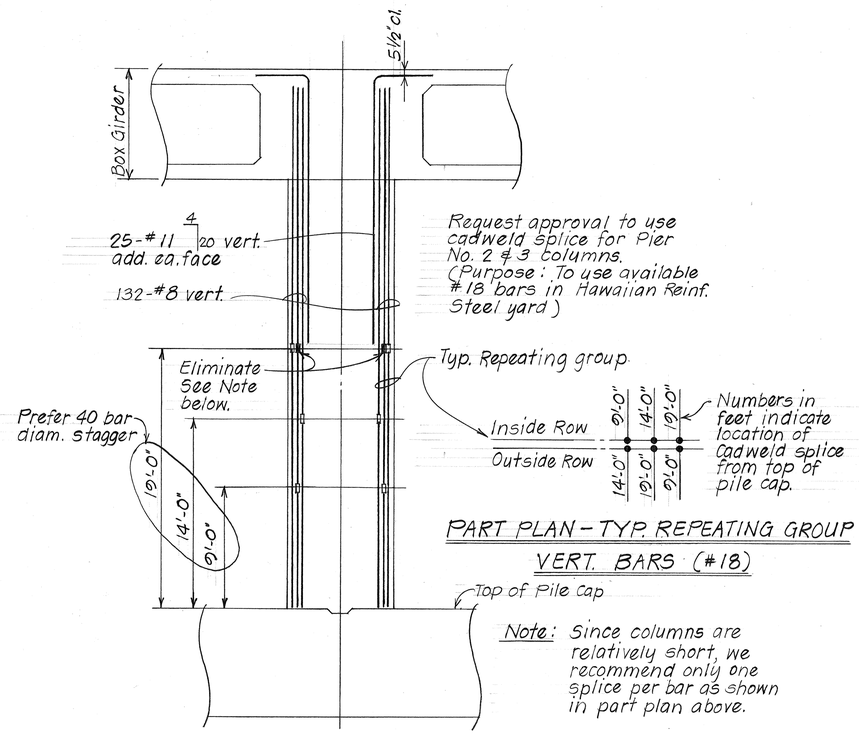

PART PLAN - TYP. REPEATING GROUP
VERT. BARS (#18)

Note: Since columns are relatively short, we recommend only one splice per bar as shown in part plan above.

Note: Refer to sht. 89 for bal. of reinf.

PIER NOS. 2 & 3

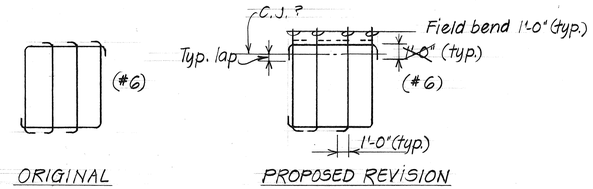

BEAM A-1 & A-2 STIRRUPS
Refer to shts. 93 & 94 for bal. of reinf.

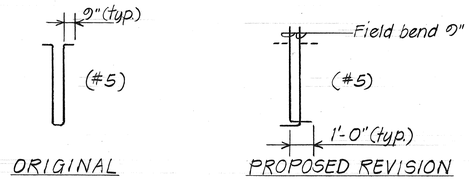

BEAM B STIRRUPS
Refer to sht. 110 for bal. of reinf.

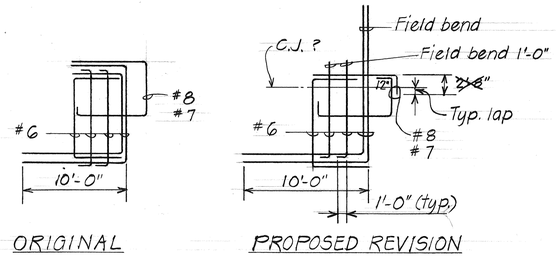

BEAM C1 & C2
Refer to sht. 98 for bal. of reinf.

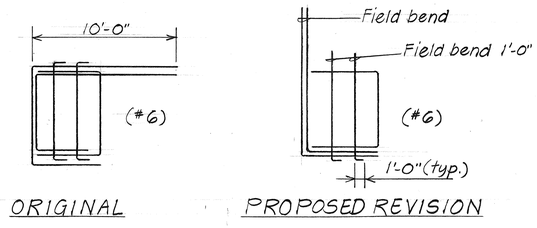

BEAM D-1 & D-2 STIRRUPS
Refer to sht. 98 for bal. of reinf.

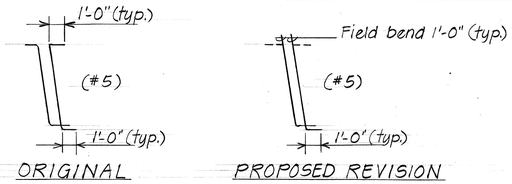

EXTERIOR GIRDER STIRRUPS
Refer to sht. 73 for bal. of reinf

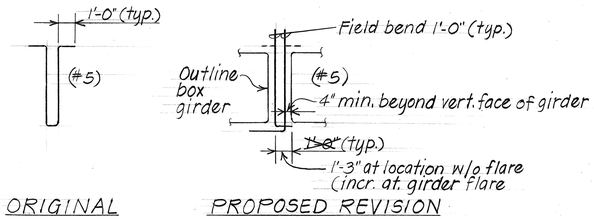

INTERIOR GIRDER STIRRUPS
Refer to sht. 73 for bal. of reinf.

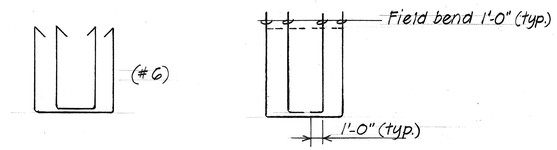

PIER CAP STIRRUPS
Refer to sht. 92 for bal. of reinf.

This tracing prepared during "As Built" postings.

ORIGINAL PLAN	SURVEY PLOTTED BY	DATE
	DRAWN BY	
	TRACED BY	
NOTE BOOK	DESIGNED BY	
	QUANTITIES BY	
No.	CHECKED BY	

STATE OF HAWAII
DEPARTMENT OF TRANSPORTATION
HIGHWAYS DIVISION

SPLICE DET. - PIER NOS. 2 & 3
BEAM, GIRDER & PIER CAP STIRRUP DETS.

INTERSTATE ROUTE H-1
KAPIOLANI INTERCHANGE ON-RAMP
F.A.I PROJ. NO. I-HI-1(157):24

Scale: N.T.S. Date: 7-13-88

SHEET No. 5-22A OF 6-41 SHEETS

89S-1

FED. ROAD DIST. NO.	STATE	FED. AID PROJ. NO.	FISCAL YEAR	SHEET NO.	TOTAL SHEETS
HAWAII	HAW.	I-HI-1(157)-24	1979	90	146

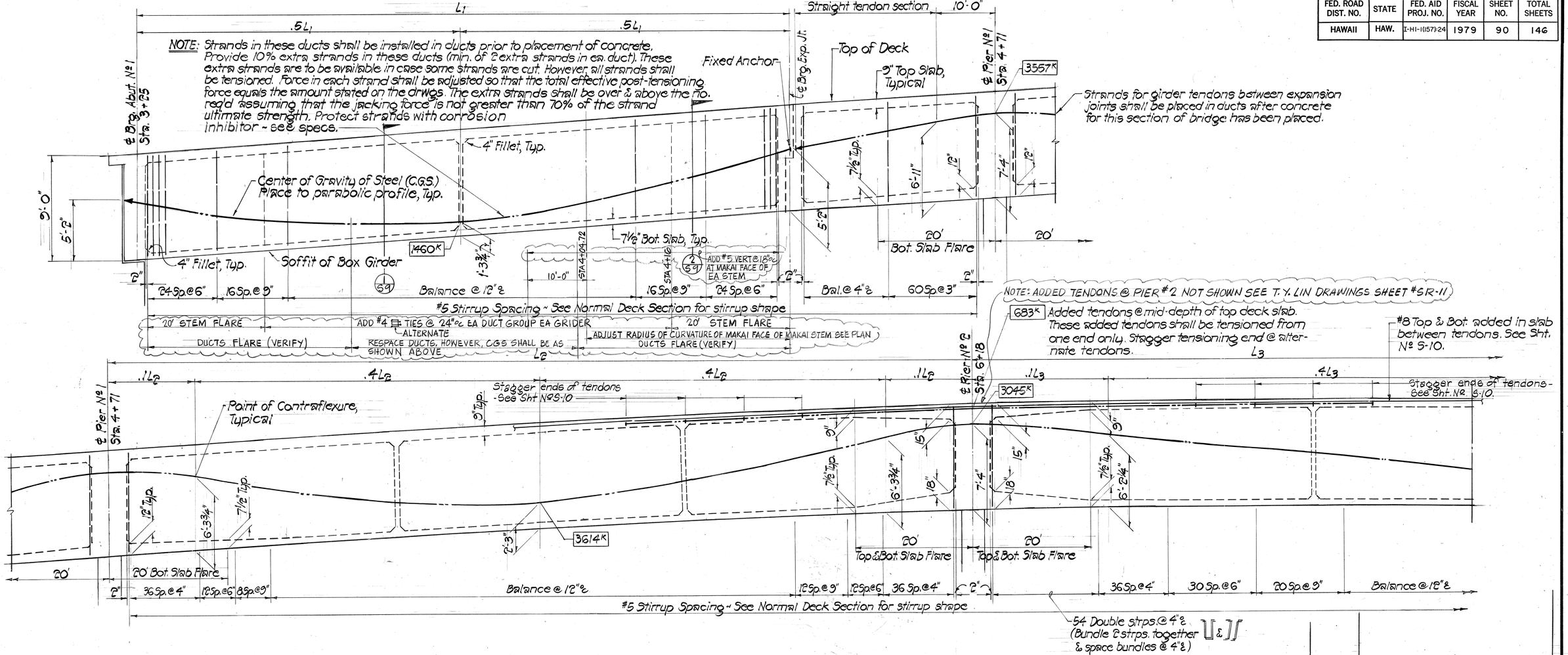

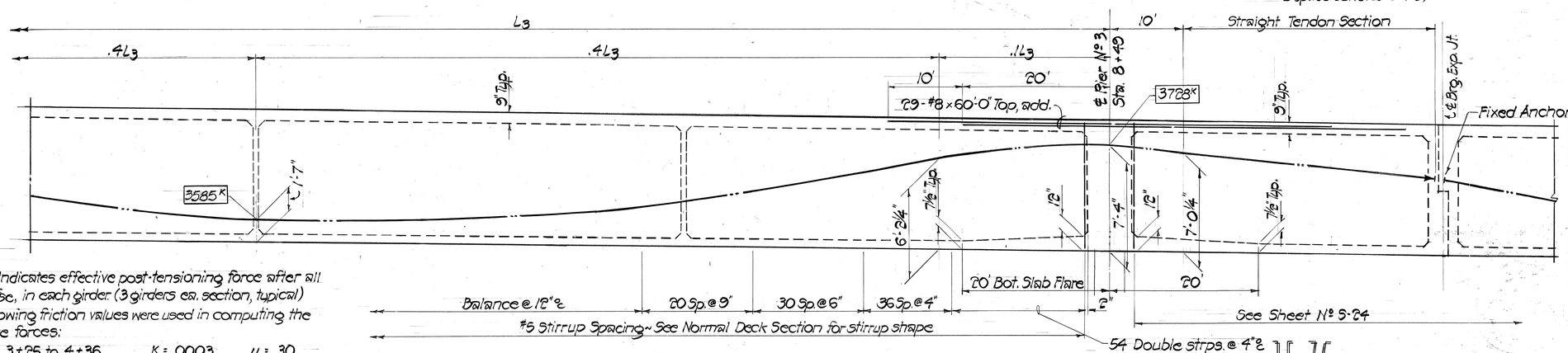

NOTES:

1. 3530K Indicates effective post-tensioning force after all losses, fse, in each girder. (3 girders ea. section, typical)
2. The following friction values were used in computing the effective forces:

Sta. 3+25 to 4+36	K = .0003	μ = .30
Sta. 4+36 to 8+94	K = .0002	μ = .25
Sta. 8+94 to 11+40.25	K = .0003	μ = .30

Horiz. & vert. curvature of bridge has also been considered.

TYPICAL EXTERIOR GIRDER ELEVATION (INTERIOR SIM.)

SCALES: Horiz. 1/8" = 1'-0"
Vert. 1/4" = 1'-0"

DATE	REVISION
3-25-83	Added Ties and Stirrups
6/16/80	Revised post-tensioning force figure between Pier No. 2 & Pier No. 3, per Addendum No. 2.

ENGINEERING DESIGN GROUP, INC.
Consulting Engineers
225 Queen St., Suite 504
Honolulu, Hawaii 96813

EDGAR K. M. LEE REGISTERED PROFESSIONAL ENGINEER No. 2150 HAWAII, U.S.A.

This work was prepared by me or under my supervision

STATE OF HAWAII
DEPARTMENT OF TRANSPORTATION
LAND TRANSPORTATION FACILITIES DIVISION

TYPICAL GIRDER ELEVATION STA. 3+25 TO STA. 8+49

INTERSTATE ROUTE H-1
KAPIOLANI INTERCHANGE ON-RAMP
F.A.I. PROJ. NO. I-H1-1(157):24

Scale: As Noted
Date: 4-10-80

SHEET No. S-23 OF S-41 SHEETS

ORIGINAL PLAN
SURVEY PLOTTED BY
DRAWN BY
TRACED BY
DESIGNED BY
NOTE BOOK
QUANTITIES BY
No.
CHECKED BY
DATE

C.O. 90R

FED. ROAD DIST. NO.	STATE	FED. AID PROJ. NO.	FISCAL YEAR	SHEET NO.	TOTAL SHEETS
HAWAII	HAW.	I-HI-1(157)24	1979	91	146

PRELOAD NOTES: PROVIDE SHORING BELOW THE EXP. JT OF THE GIRDERS TO SUPPORT ADDED WEIGHT. PLACE WEIGHT ON END OF BM. AND WEBS AS CLOSE AS POSSIBLE TO THE END AT THE EXP. JT. MONITOR DEFLECTION. JACK UP AS REQUIRED TO PREVENT MOVEMENT OF EXP. JT. WEIGHTS TO REMAIN IN PLACE UNTIL SECTION 3 HAS BEEN POST-TENSIONED. SHORES SHALL NOT BE REMOVED UNTIL AFTER THE PRELOAD IS REMOVED. SEE BELOW FOR ADDITIONAL NOTES ON LOADING AND UNLOADING PRELOAD WEIGHTS.

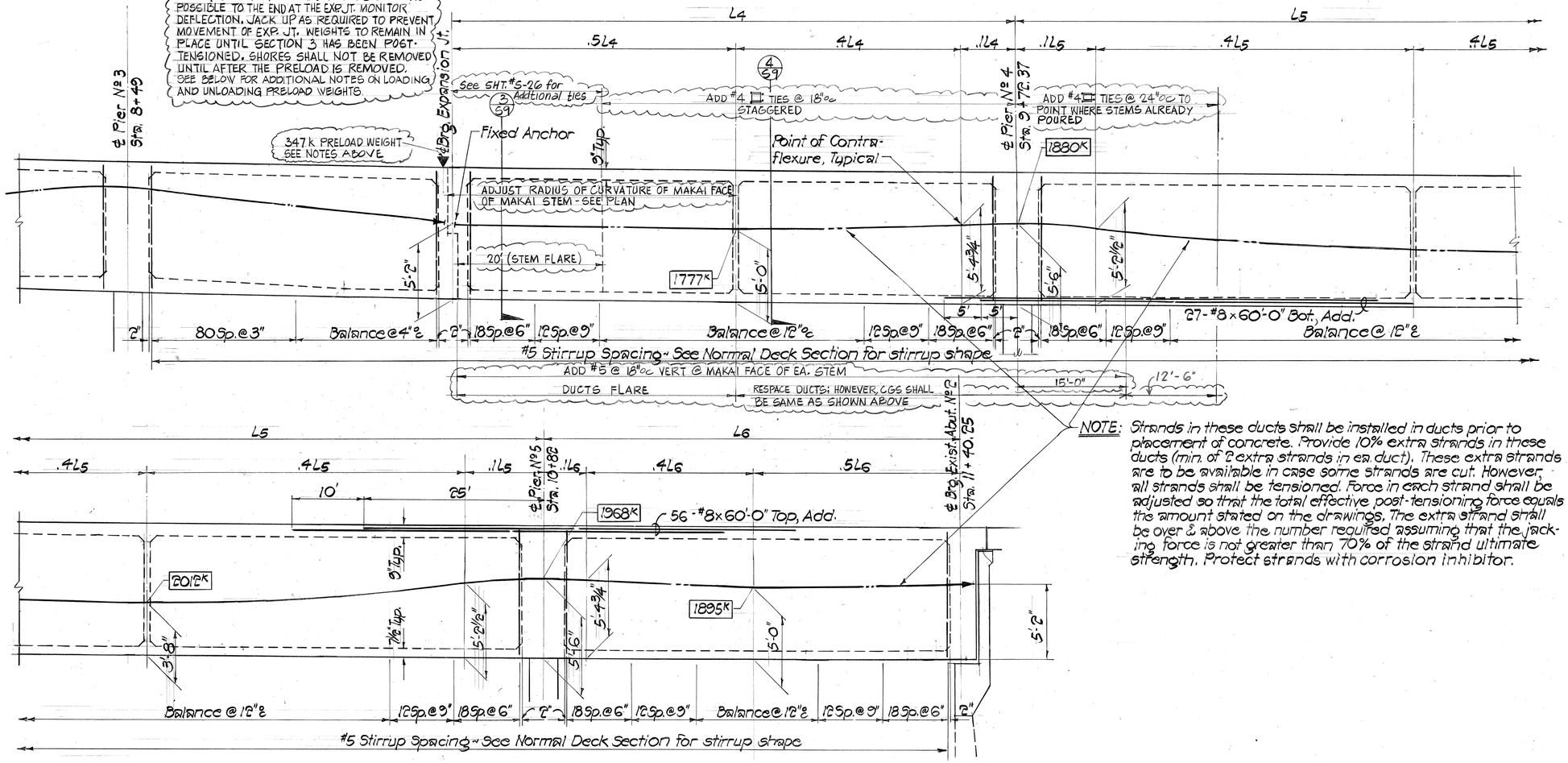

NOTE: Strands in these ducts shall be installed in ducts prior to placement of concrete. Provide 10% extra strands in these ducts (min. of 2 extra strands in ea. duct). These extra strands are to be available in case some strands are cut. However, all strands shall be tensioned. Force in each strand shall be adjusted so that the total effective post-tensioning force equals the amount stated on the drawings. The extra strand shall be over & above the number required assuming that the jacking force is not greater than 70% of the strand ultimate strength. Protect strands with corrosion inhibitor.

TYPICAL EXTERIOR GIRDER ELEVATION (INTERIOR SIM.)

SCALES: Horiz. 1/8" = 1'-0"
Vert. 1/4" = 1'-0"

PRELOAD LOADING SEQUENCE:

1. INSTALL SHORING UNDER AREA TO BE PRELOADED. (SEE SPECIFICATIONS AND ADDENDUM No. 1)
2. TENSION FIRST THREE (3) TENDONS.
3. PLACE APPROXIMATELY 40 KIPS OF PRELOAD WEIGHT.
4. PLACE REMAINDER OF PRELOAD WEIGHTS IN INCREMENTS AS THE REMAINDER OF THE TENSIONING IS DONE. (PLACE APPROXIMATELY 40 KIPS OF PRELOAD WEIGHT FOR EACH ADDITIONAL TWO (2) TENDONS TENSIONED.)
5. PRELOADING MAY BE DONE CONCURRENTLY WITH THE TENSIONING SO LONG AS THE PRELOADING PERCENTAGE IS APPROXIMATELY EQUAL TO THE TENSIONING PERCENTAGE.

PRELOAD UNLOADING SEQUENCE:

1. AFTER SECTION 3 IS POST-TENSIONED, LOOSEN SHORES BETWEEN PIERS 4 & 5 AND BETWEEN PIERS 2 & 3. (SEE SPECIFICATIONS FOR DETAILED REQUIREMENTS FOR REMOVAL OF FALSEWORK.)
2. REMOVE PRELOAD WEIGHTS.
3. REMOVE SHORES BETWEEN PIERS 3 & 4.

NOTE:
See Notes, Sht. No S-23.

DATE	REVISION
3-25-83	Added Ties, Stirrups, Preload at Exp. Jt. and Preload Loading & Unloading Sequence

ORIGINAL PLAN — SURVEY PLOTTED BY ___ DATE ___; DRAWN BY ___; TRACED BY ___; DESIGNED BY ___; QUANTITIES BY ___; CHECKED BY ___; NOTE BOOK No. ___

DAMES & MOORE DESIGN GROUP, INC.
Consulting Engineers
225 Queen St., Suite 504
Honolulu, Hawaii 96813
EDGAR K. M. LEE — REGISTERED PROFESSIONAL ENGINEER No. 2150 — HAWAII
This work was prepared by me or under my supervision

STATE OF HAWAII
DEPARTMENT OF TRANSPORTATION
LAND TRANSPORTATION FACILITIES DIVISION

TYPICAL GIRDER ELEVATION
STA. 8+49 TO STA. 11+40.25
INTERSTATE ROUTE H-1
KAPIOLANI INTERCHANGE ON-RAMP
F.A.I. PROJ. NO. I-HI-1(157):24

Scale: As Noted — Date: 4-10-80

SHEET No. S-24 OF S-41 SHEETS

C.O. 91

FED. ROAD DIST. NO.	STATE	FED. AID PROJ. NO.	FISCAL YEAR	SHEET NO.	TOTAL SHEETS
HAWAII	HAW.	I-HI-1(157)-24	1979	92	146

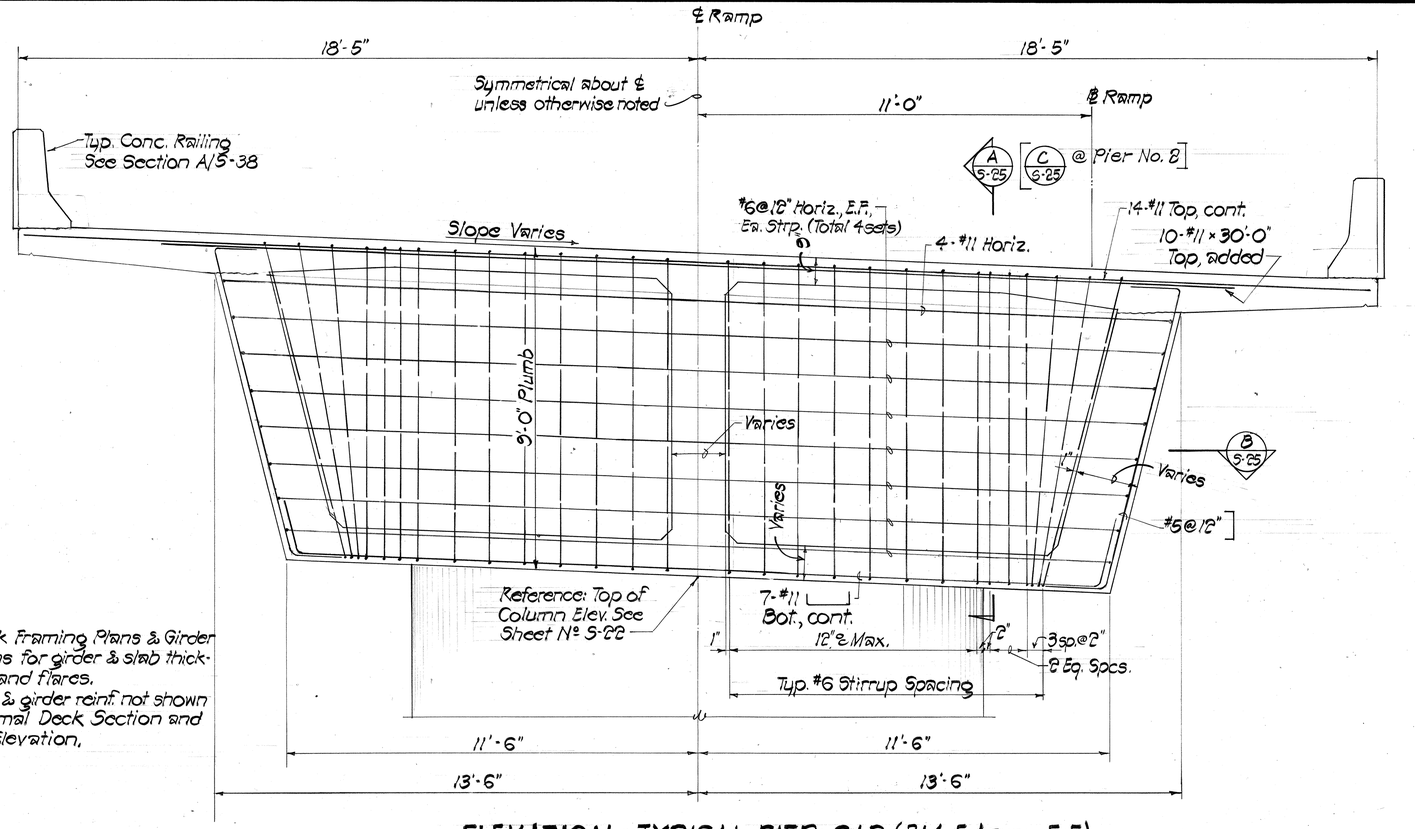

NOTE:

1. See Deck Framing Plans & Girder Elevations for girder & slab thicknesses and flares.
2. For slab & girder reinf. not shown see Normal Deck Section and Girder Elevation.

ELEVATION ~ TYPICAL PIER CAP (BM. E-1 THRU E-5)

Scale: 1/2" = 1'-0"

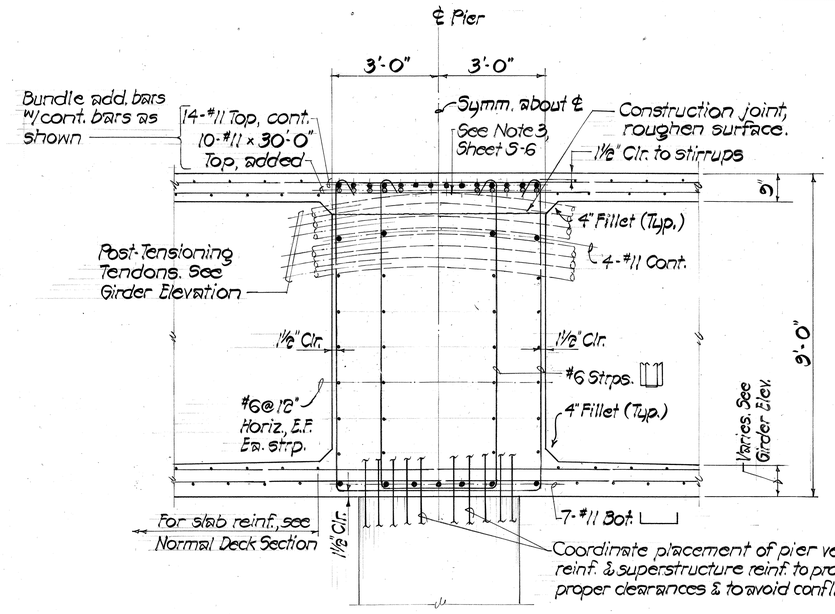

TYPICAL PIER CAP ~ SECTION A S-25

Scale: 1/2" = 1'-0"

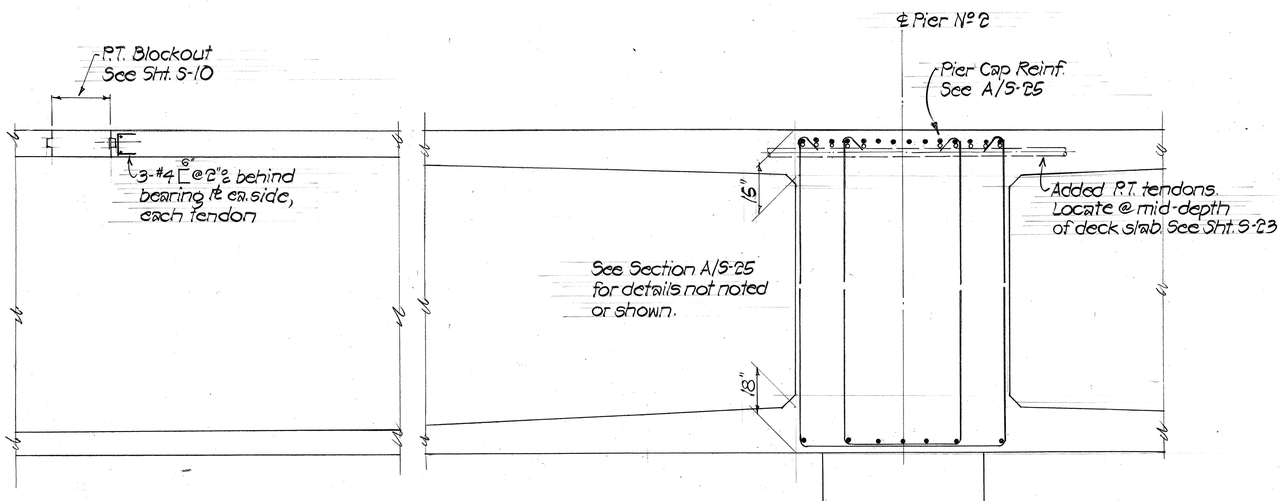

SECTION C S-25

Scale: 1/2" = 1'-0"

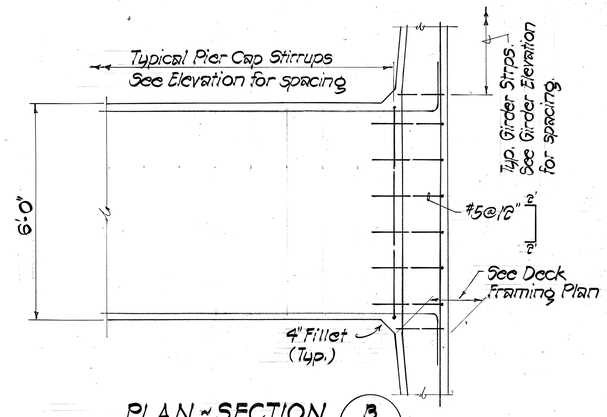

PLAN ~ SECTION B S-25

Scale: 1/2" = 1'-0"

ORIGINAL PLAN	SURVEY PLOTTED BY	DATE
	DRAWN BY	"
	TRACED BY	"
NOTE BOOK	DESIGNED BY	"
	QUANTITIES BY	"
No.	CHECKED BY	"

ENGINEERING DESIGN GROUP, INC.
Consulting Engineers
225 Queen St., Suite 504
Honolulu, Hawaii 96813

EDGAR K. MAUE REGISTERED PROFESSIONAL ENGINEER No. 2150 HAWAII U.S.A.

This work was prepared by me or under my supervision

STATE OF HAWAII
DEPARTMENT OF TRANSPORTATION
LAND TRANSPORTATION FACILITIES DIVISION

TYP. PIER CAP (BEAMS E-1 ~ E-5) ELEVATIONS & SECTIONS

INTERSTATE ROUTE H-1
KAPIOLANI INTERCHANGE ON-RAMP
F.A.I. PROJ. NO. I-H1-1(157):24

Scale: As Noted — Date: 4-10-80

SHEET No. S-25 OF S41 SHEETS

FED. ROAD DIST. NO.	STATE	FED. AID PROJ. NO.	FISCAL YEAR	SHEET NO.	TOTAL SHEETS
HAWAII	HAW.	I-HI-1(157):24	1979	93	146

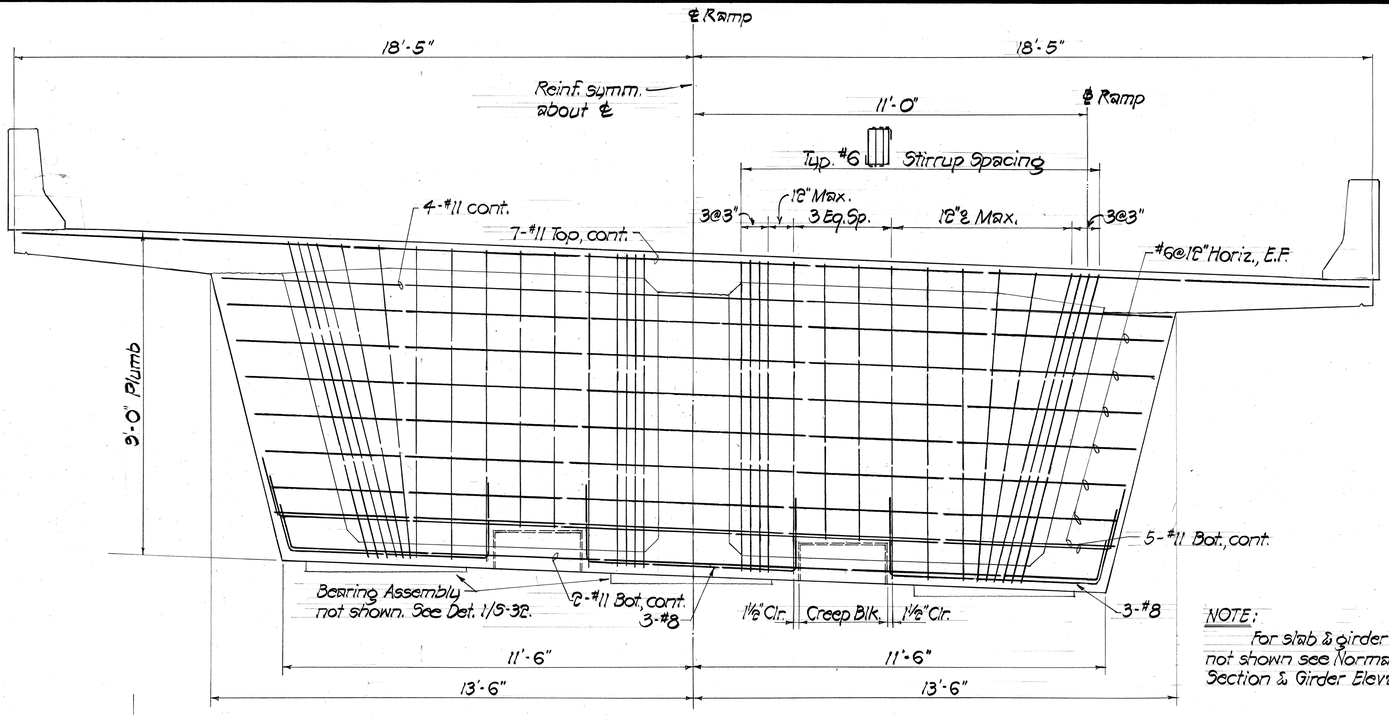

NOTE:
For slab & girder reinf. not shown see Normal Deck Section & Girder Elevation.

ELEVATION - TYPICAL BEAM @ ABUTMENT (BEAM A-1 & A-2)

Scale: ½" = 1'-0"

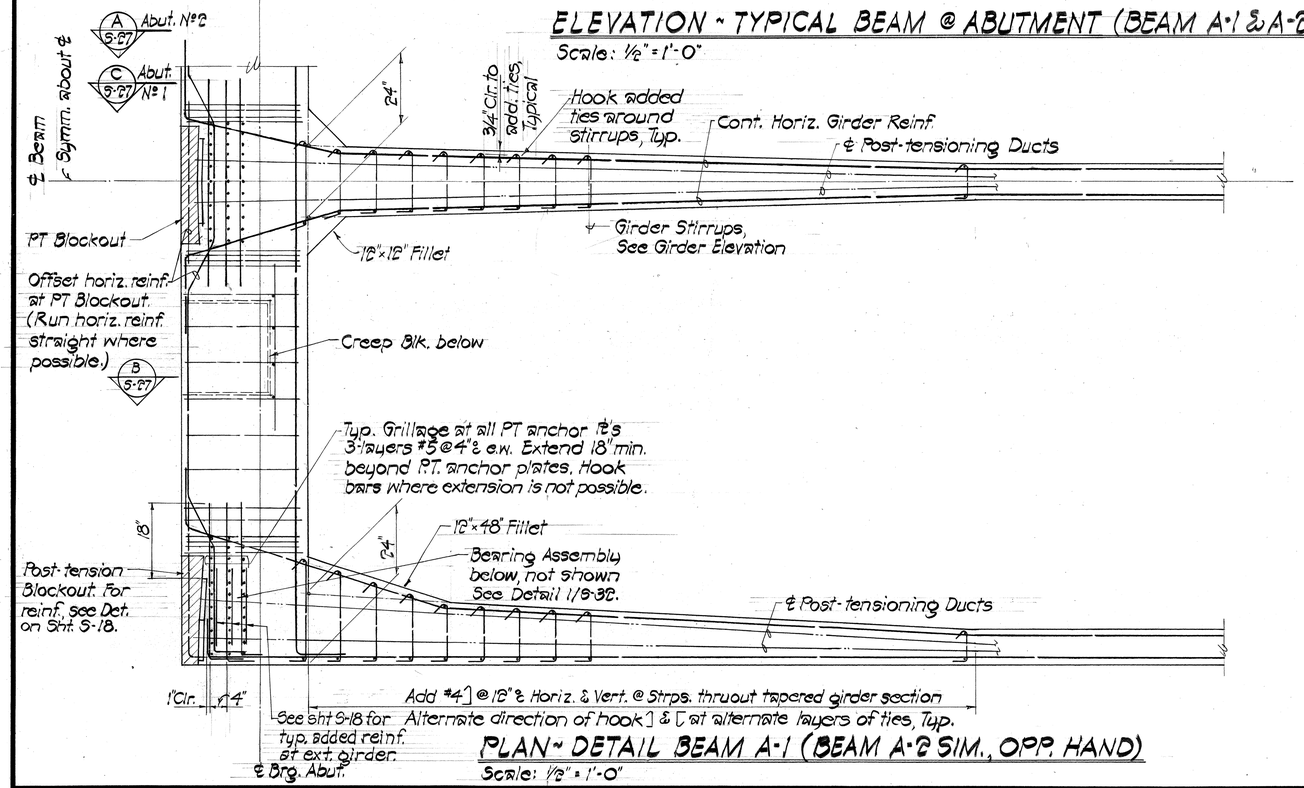

PLAN - DETAIL BEAM A-1 (BEAM A-2 SIM., OPP. HAND)

Scale: ½" = 1'-0"

ORIGINAL PLAN	SURVEY PLOTTED BY	DATE
	DRAWN BY	"
	TRACED BY	"
	DESIGNED BY	"
NOTE BOOK	QUANTITIES BY	"
No.	CHECKED BY	"

ENGINEERING DESIGN GROUP, INC.
Consulting Engineers
225 Queen St., Suite 504
Honolulu, Hawaii 96813

EDGAR K. M. LEE
REGISTERED PROFESSIONAL ENGINEER
No. 2150
HAWAII, U.S.A.

This work was prepared by me or under my supervision.

STATE OF HAWAII
DEPARTMENT OF TRANSPORTATION
LAND TRANSPORTATION FACILITIES DIVISION

TYP. BEAM @ ABUTMENT (A-1 & A-2)
PLAN & ELEVATION

INTERSTATE ROUTE H-1
KAPIOLANI INTERCHANGE ON-RAMP
F.A.I. PROJ. NO. I-HI-1(157):24

Scale: As Noted
Date: 4-10-80

SHEET No. S-26 OF S-41 SHEETS

FED. ROAD DIST. NO.	STATE	FED. AID PROJ. NO.	FISCAL YEAR	SHEET NO.	TOTAL SHEETS
HAWAII	HAW.	I-HI-1(157)24	1979	94	146

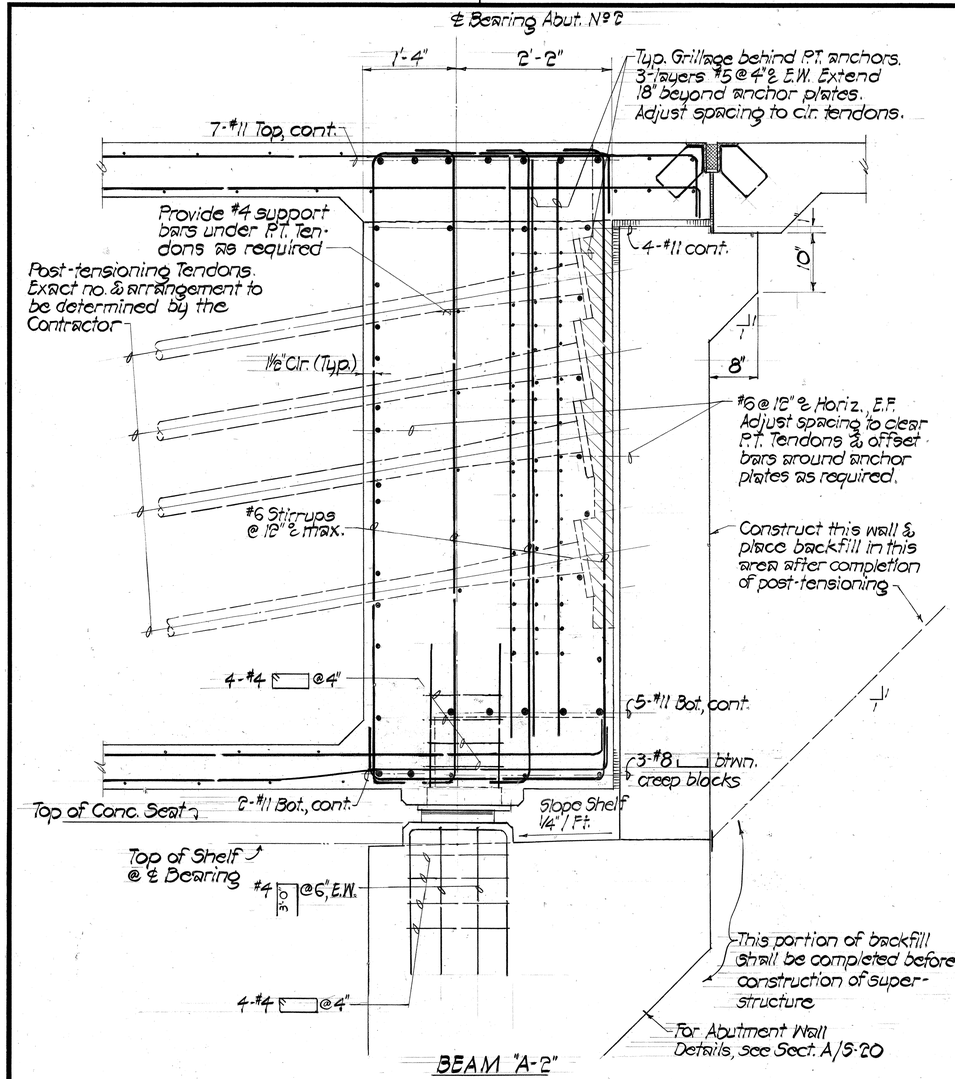

TYP. ABUTMENT Nº 2 SECTION (A / S-27)

Scale: 1" = 1'-0"

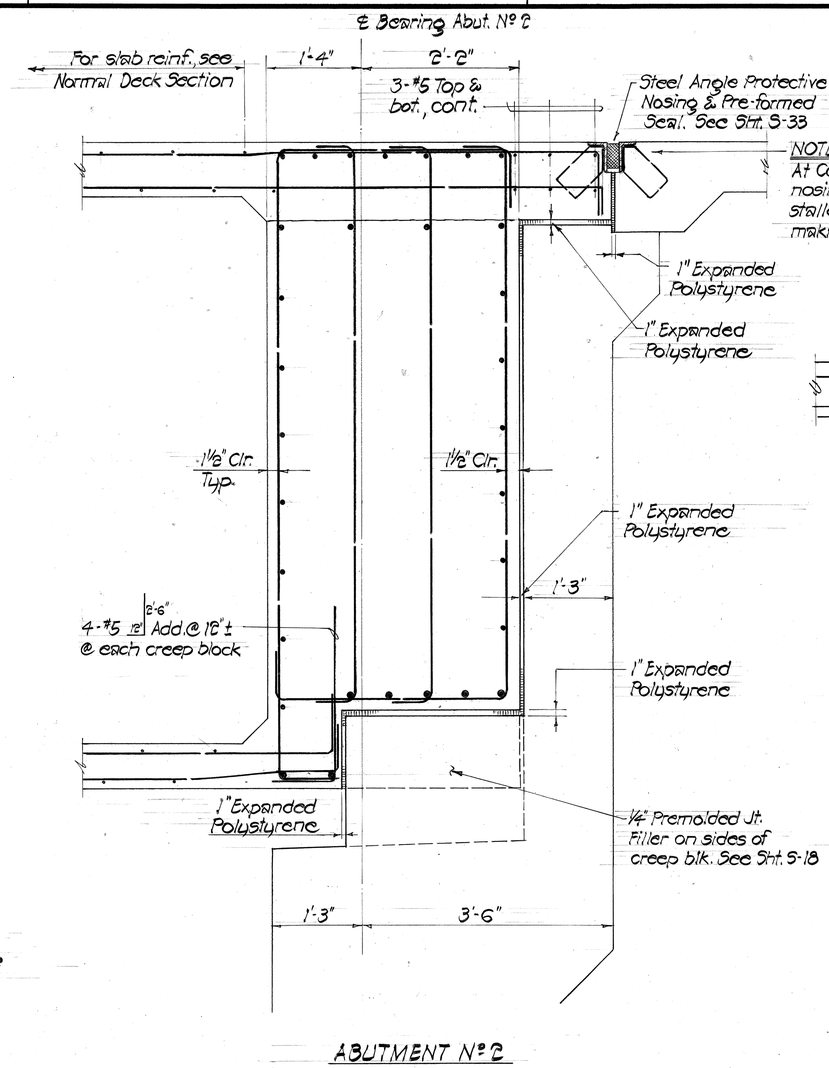

TYP. ABUTMENT SECTION @ CREEP BLOCK (B / S-27)

Scale: 1" = 1'-0"

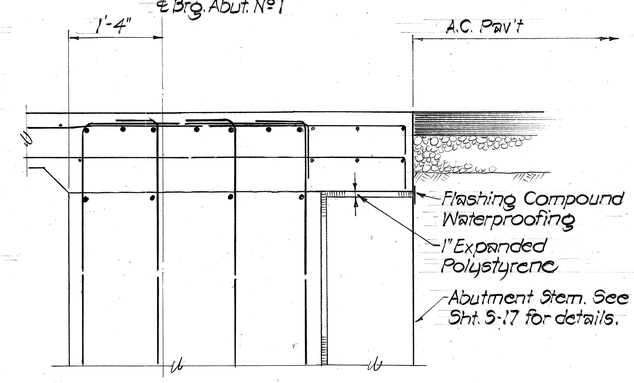

NOTE: Reinf. & balance of detail similar to Section A/S-27.

BEAM "A-1"

TYP. ABUTMENT Nº 1 SECTION (C / S-27)

Scale: 1" = 1'-0"

ORIGINAL PLAN	SURVEY PLOTTED BY	DATE
	DRAWN BY	"
	TRACED BY	"
NOTE BOOK	DESIGNED BY	"
	QUANTITIES BY	"
No.	CHECKED BY	"

ENGINEERING DESIGN GROUP, INC.
Consulting Engineers
225 Queen St., Suite 504
Honolulu, Hawaii 96813

EDGAR K. M. LEE
REGISTERED PROFESSIONAL ENGINEER
No. 2150
HAWAII, U.S.A.

This work was prepared by me or under my supervision

STATE OF HAWAII
DEPARTMENT OF TRANSPORTATION
LAND TRANSPORTATION FACILITIES DIVISION

ABUTMENT SECTIONS

INTERSTATE ROUTE H-1
KAPIOLANI INTERCHANGE ON-RAMP
F.A.I. PROJ. NO. I-H1-1 (157); 24

Scale: As Noted — Date: 4-10-80

SHEET No. S-27 OF S-41 SHEETS

FED. ROAD DIST. NO.	STATE	FED. AID PROJ. NO.	FISCAL YEAR	SHEET NO.	TOTAL SHEETS
HAWAII	HAW.	I-HI-1(157)-24	1979	95	146

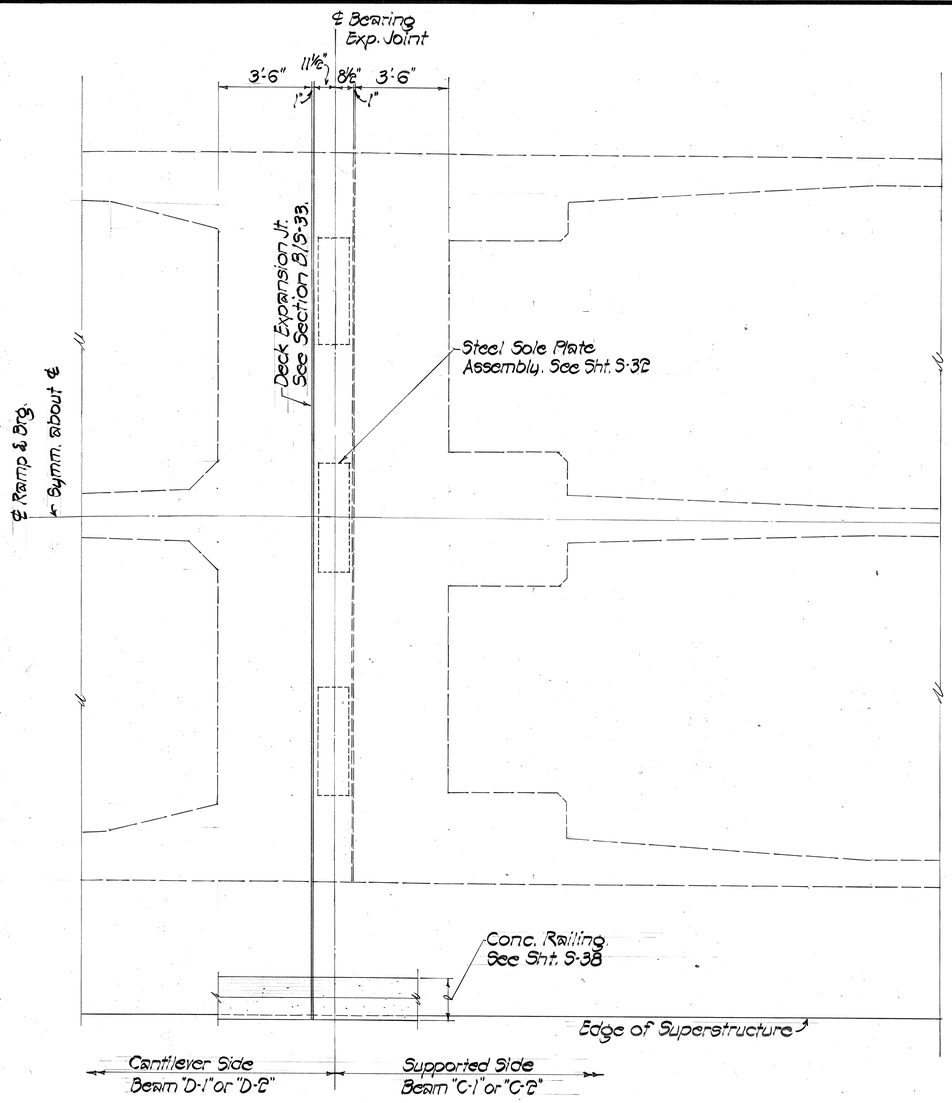

TYP. EXPANSION JOINT PLAN AT DECK LEVEL

Scale: 3/8" = 1'-0"

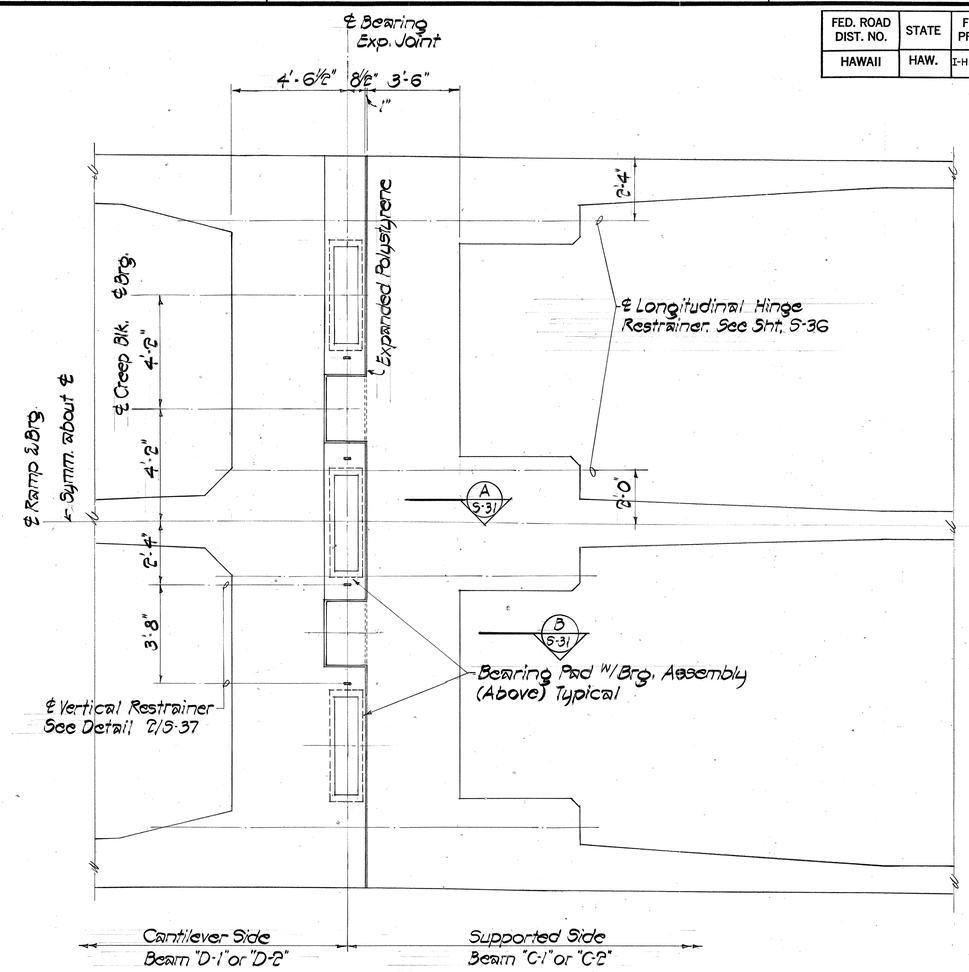

TYP. EXPANSION JOINT PLAN AT BEARING LEVEL

Scale: 3/8" = 1'-0"

NOTE:

Expansion joint shown is at Sta. 8+94.
Expansion joint at Sta. 4+36 similar but opp. hand.

ORIGINAL PLAN		DATE
	SURVEY PLOTTED BY	
	DRAWN BY	" " " "
NOTE BOOK	TRACED BY	
	DESIGNED BY	
No.	QUANTITIES BY	
	CHECKED BY	

ENGINEERING DESIGN GROUP, INC.
Consulting Engineers
223 Queen St., Suite 504
Honolulu, Hawaii 96813

EDGAR K. M. LEE
REGISTERED PROFESSIONAL ENGINEER
No. 2150
HAWAII, U.S.A.

This work was prepared by me or under my supervision

STATE OF HAWAII
DEPARTMENT OF TRANSPORTATION
LAND TRANSPORTATION FACILITIES DIVISION

EXPANSION JOINT PLANS

INTERSTATE ROUTE H-1
KAPIOLANI INTERCHANGE ON-RAMP
F.A.I. PROJ. NO. I-H1-1(157):24

Scale: As Noted — Date: 4-10-80

SHEET No. S-28 OF S-41 SHEETS

FED. ROAD DIST. NO.	STATE	FED. AID PROJ. NO.	FISCAL YEAR	SHEET NO.	TOTAL SHEETS
HAWAII	HAW.	I-HI-1(157)24	1979	96	146

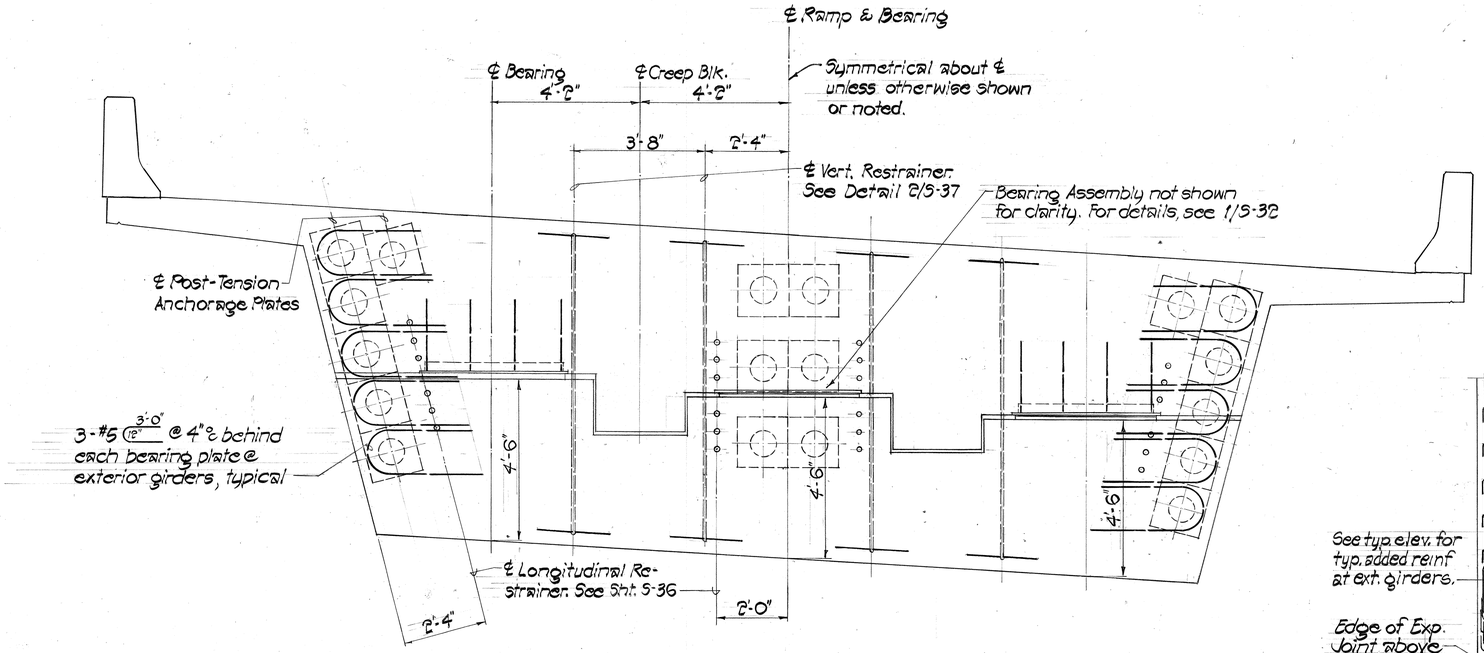

TYP. ELEVATION @ EXPANSION JOINT

Scale: 1/2" = 1'-0"

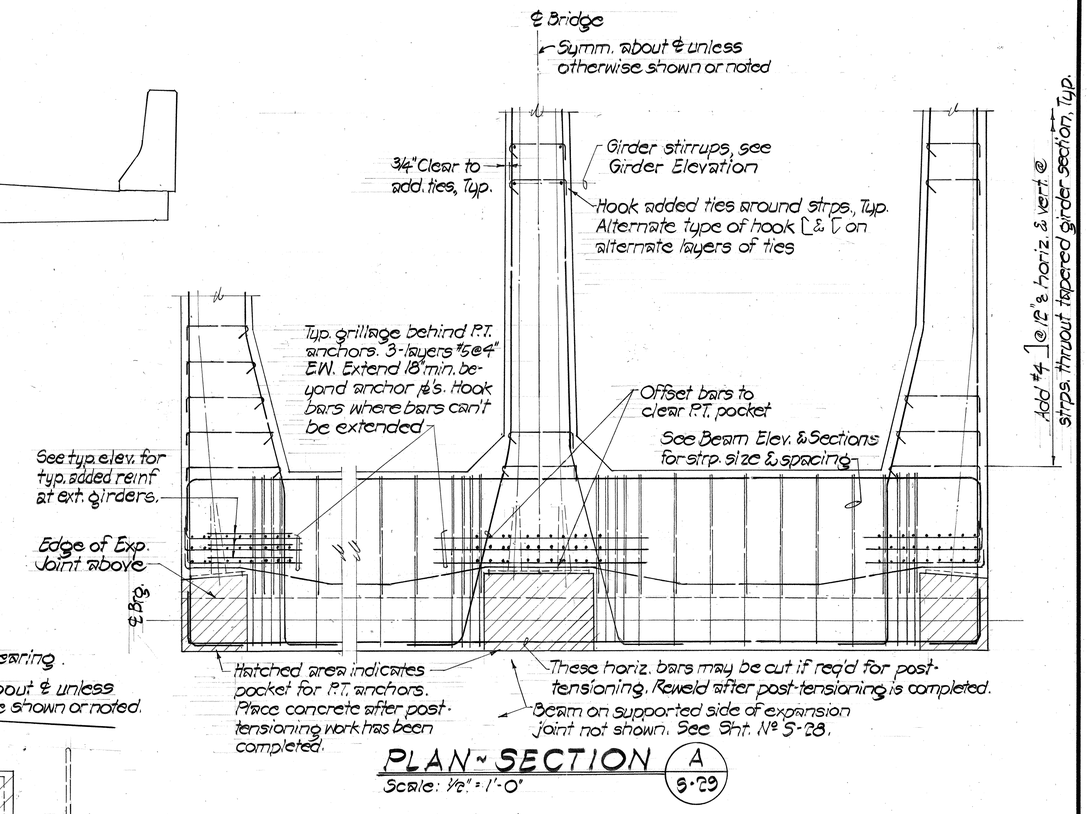

PLAN - SECTION A/S-29

Scale: 1/2" = 1'-0"

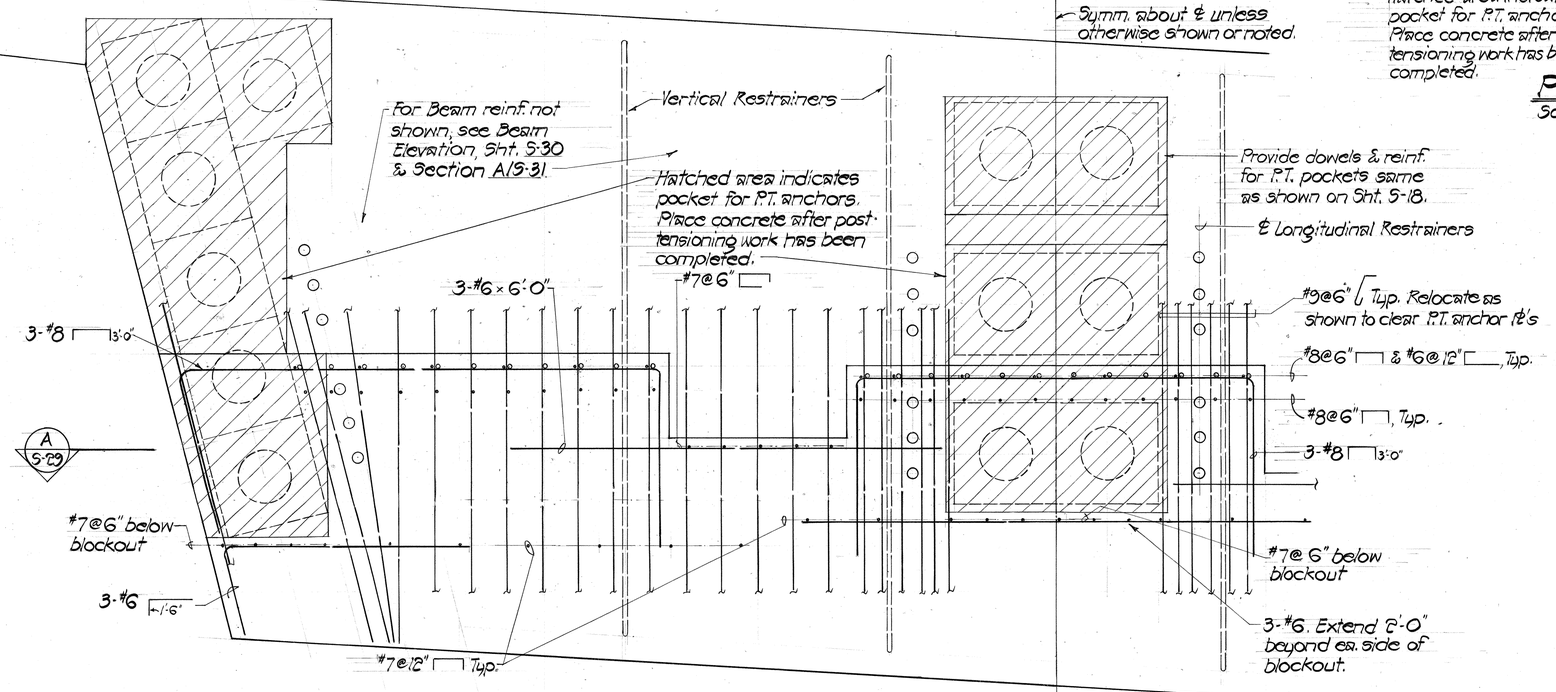

BEAM SECTION @ CANTILEVER SIDE OF EXP. JOINT (BEAM "D-1" OR "D-2")

Scale: 1" = 1'-0"

ORIGINAL PLAN	SURVEY PLOTTED BY	DATE
	DRAWN BY	
	TRACED BY	
NOTE BOOK	DESIGNED BY	
	QUANTITIES BY	
No.	CHECKED BY	

ENGINEERING DESIGN GROUP, INC.
Consulting Engineers
225 Queen St., Suite 506
Honolulu, Hawaii 96813

EDGAR K. M. LEE
REGISTERED PROFESSIONAL ENGINEER
No. 2130
HAWAII, U.S.A.

This work was prepared by me or under my supervision.

STATE OF HAWAII
DEPARTMENT OF TRANSPORTATION
LAND TRANSPORTATION FACILITIES DIVISION

EXPANSION JOINT ELEVATION & SECTIONS

INTERSTATE ROUTE H-1
KAPIOLANI INTERCHANGE ON-RAMP
F.A.I. PROJ. NO. I-HI-1(157):24

Scale: As Noted — Date: 4-10-80

SHEET No. S-29 OF S-41 SHEETS

FED. ROAD DIST. NO.	STATE	FED. AID PROJ. NO.	FISCAL YEAR	SHEET NO.	TOTAL SHEETS
HAWAII	HAW.	I-HI-1(157)24	1979	97	146

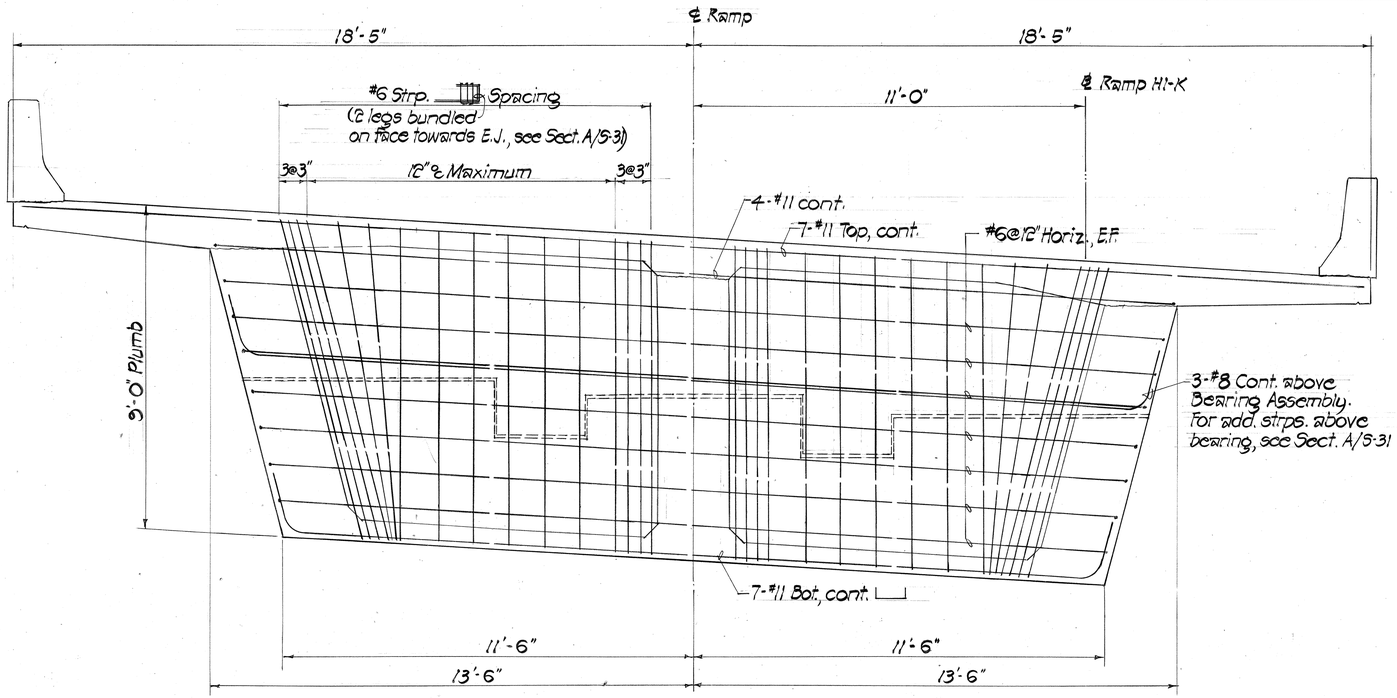

ELEVATION ~ BEAM C-1 @ EXPANSION JOINT (SUPPORTED SIDE ~ BEAM C-2 SIM., OPP. HAND) (BM. C-1 @ STA. 4+36, BM. C-2 @ STA. 8+94)

Scale: 1/2" = 1'-0"

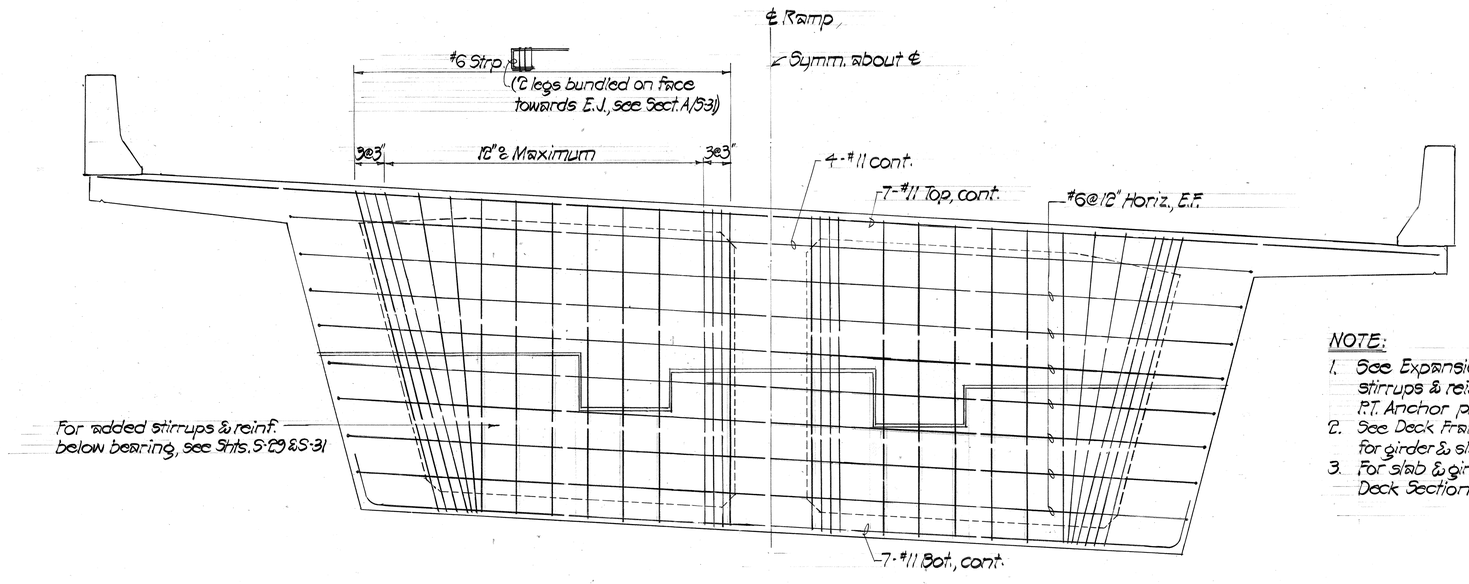

NOTE:

1. See Expansion Joint Sections for added stirrups & reinf. at bearings, creep blocks & P.T. Anchor plates, etc.
2. See Deck Framing Plans & Girder Elevations for girder & slab thicknesses and flares.
3. For slab & girder reinf. not shown see Normal Deck Section and Girder Elevation.

ELEVATION ~ BEAM D-1 @ EXPANSION JOINT (CANTILEVER SIDE ~ BM. D-2 SIM., OPP. HAND) (BEAM D-1 @ STA. 4+36, BEAM D-2 @ STA. 8+94)

Scale: 1/2" = 1'-0"

ORIGINAL PLAN	SURVEY PLOTTED BY	DATE
	DRAWN BY	"
	TRACED BY	"
NOTE BOOK	DESIGNED BY	"
	QUANTITIES BY	"
No.	CHECKED BY	"

ENGINEERING DESIGN GROUP, INC.
Consulting Engineers
225 Queen St., Suite 504
Honolulu, Hawaii 96813

EDGAR K. M. LEE
REGISTERED PROFESSIONAL ENGINEER
No. 2130
HAWAII, U.S.A.

This work was prepared by me or under my supervision.

STATE OF HAWAII
DEPARTMENT OF TRANSPORTATION
LAND TRANSPORTATION FACILITIES DIVISION

EXPANSION JOINT BEAMS (BEAMS C-1, C-2, D-1 & D-2)

INTERSTATE ROUTE H-1
KAPIOLANI INTERCHANGE ON-RAMP
F.A.I. PROJ. NO. I-H1-1(157):24

Scale: As Noted
Date: 4-10-80

SHEET No. S-30 OF S-41 SHEETS

FED. ROAD DIST. NO.	STATE	FED. AID PROJ. NO.	FISCAL YEAR	SHEET NO.	TOTAL SHEETS
HAWAII	HAW.	I-HI-1(157):24	1979	98	146

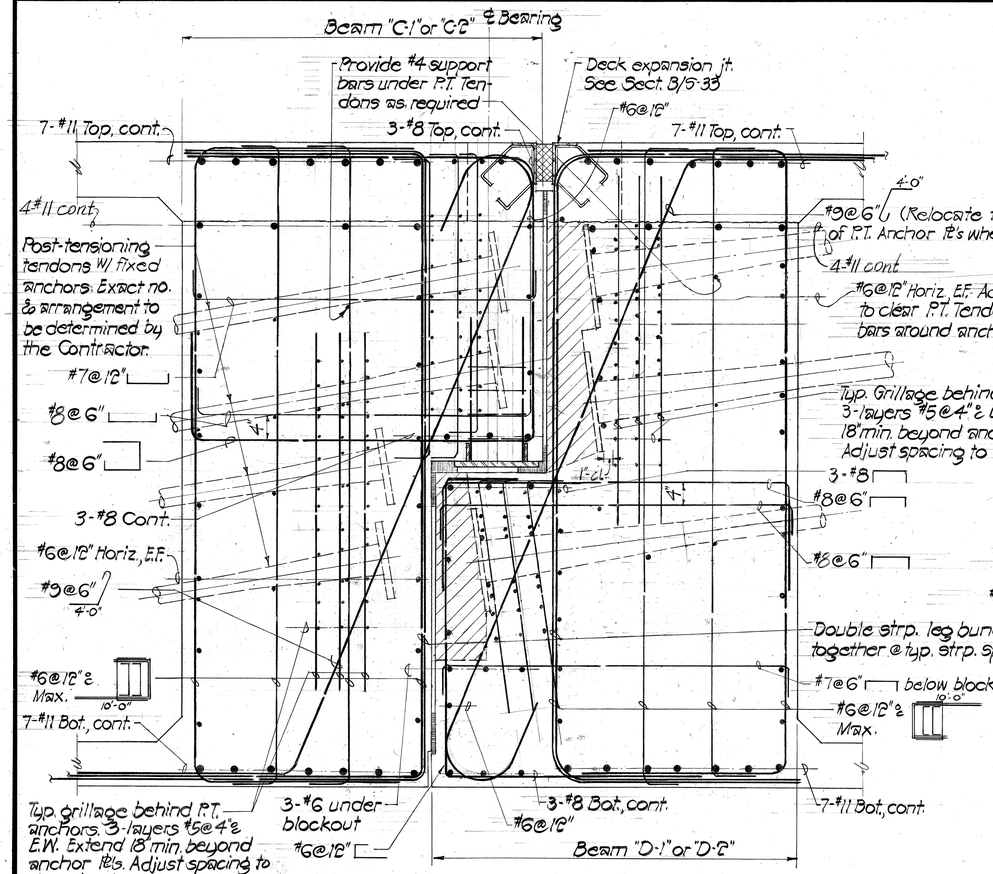

EXPANSION JOINT ~ SECTION @ BEARING (A / S-31)

Scale: 1" = 1'-0"

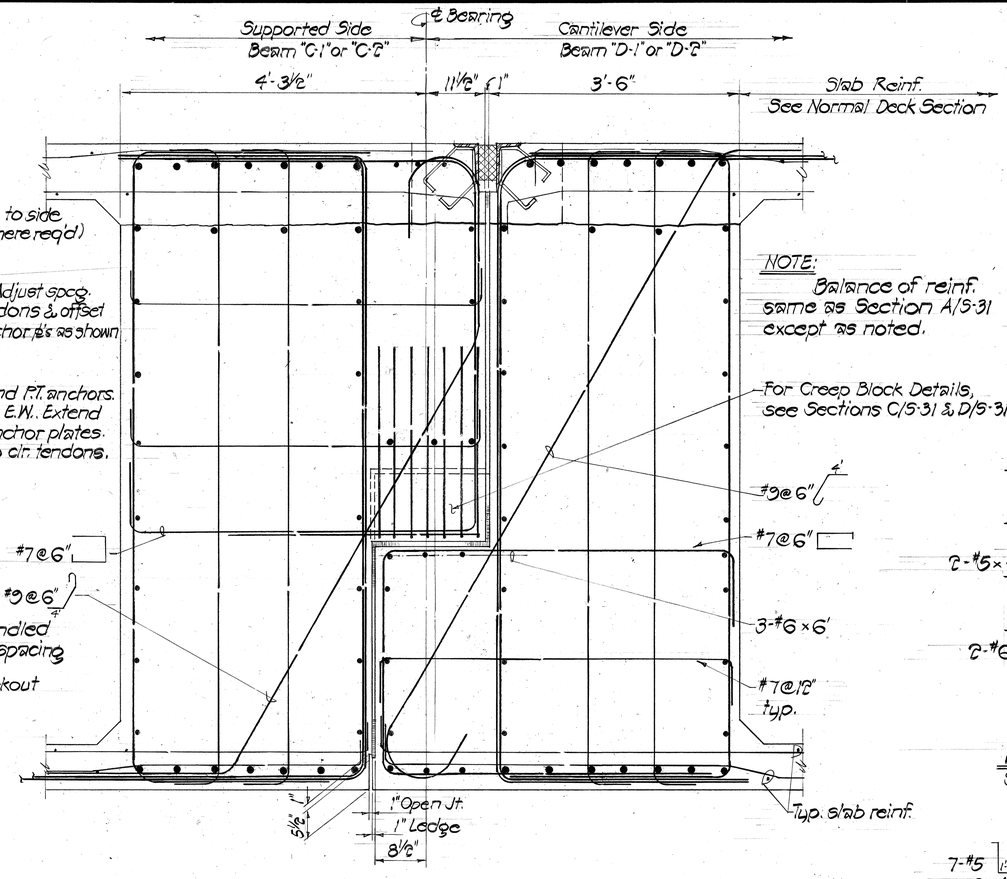

EXPANSION JOINT ~ SECTION @ CREEP BLOCK (B / S-31)

Scale: 1" = 1'-0"

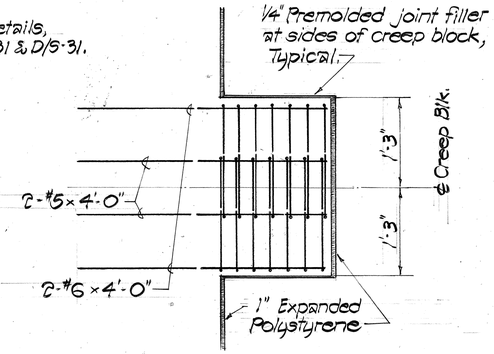

PLAN ~ SECTION (C / S-31)

Scale: 1" = 1'-0"

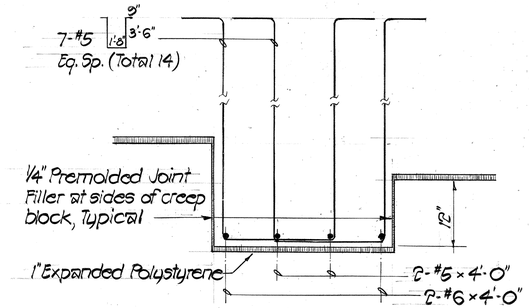

FRONT ELEVATION (D / S-31)

Scale: 1" = 1'-0"

NOTES:

1. For details of bearing assembly, see Sht. S-32.
2. For slab & girder reinf. not shown, see Normal Deck Section & Girder Elevations.

ORIGINAL PLAN		
	SURVEY PLOTTED BY	DATE
	DRAWN BY	"
	TRACED BY	"
NOTE BOOK	DESIGNED BY	"
	QUANTITIES BY	"
No.	CHECKED BY	"

ENGINEERING DESIGN GROUP, INC.
Consulting Engineers
225 Queen St., Suite 504
Honolulu, Hawaii 96813

EDGAR K. M. LEE
REGISTERED PROFESSIONAL ENGINEER
No. 2150
HAWAII, U.S.A.

This work was prepared by me or under my supervision

STATE OF HAWAII
DEPARTMENT OF TRANSPORTATION
LAND TRANSPORTATION FACILITIES DIVISION

EXPANSION JOINT SECTIONS

INTERSTATE ROUTE H-1
KAPIOLANI INTERCHANGE ON-RAMP
F.A.I. PROJ. NO. I-H1-1 (157) : 24

Scale: As Noted — Date: 4-10-80

SHEET NO. S-31 OF S-41 SHEETS

FED. ROAD DIST. NO.	STATE	FED. AID PROJ. NO.	FISCAL YEAR	SHEET NO.	TOTAL SHEETS
HAWAII	HAW.	I-HI-1(157)-24	1979	99	146

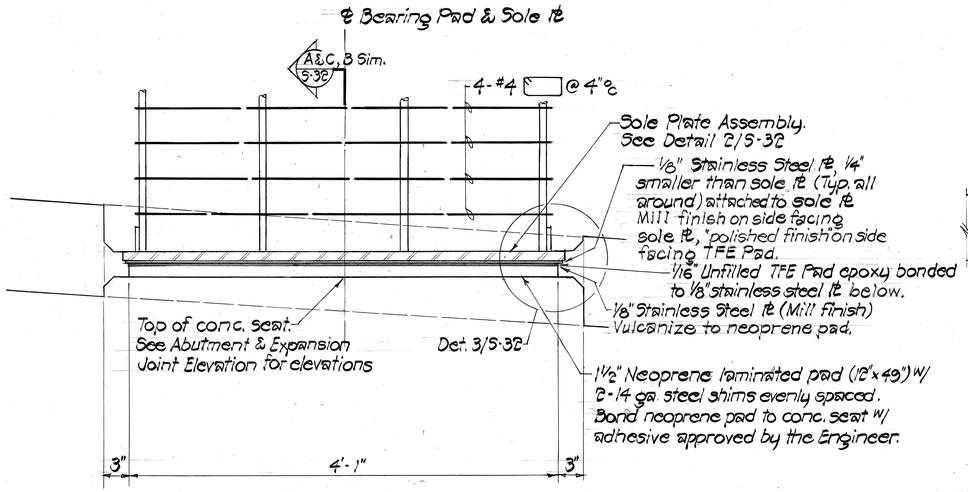

EXPANSION JOINT BEARING ASSEMBLY DETAIL (1 / 5-32)

Scale: 1 1/2" = 1'-0"

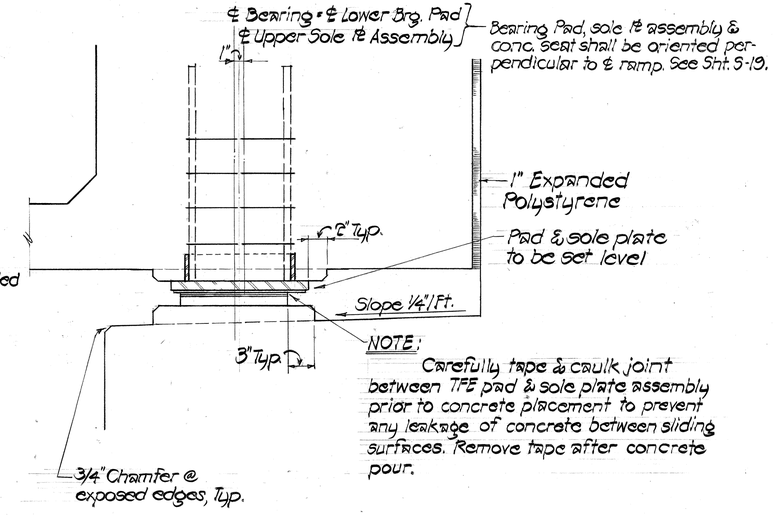

TYPICAL SECTION - ABUT. Nº 2 (A / 5-32)

Scale: 1 1/2" = 1'-0"

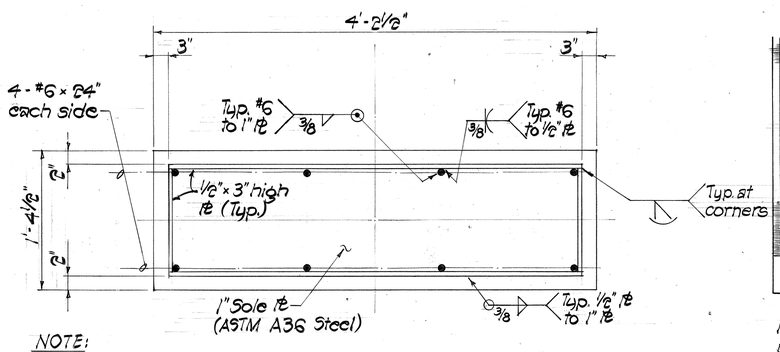

NOTE:
Galvanize assembly after fabrication.

STEEL SOLE PLATE ASSEMBLY DETAIL (2 / 5-32)

Scale: 1 1/2" = 1'-0"

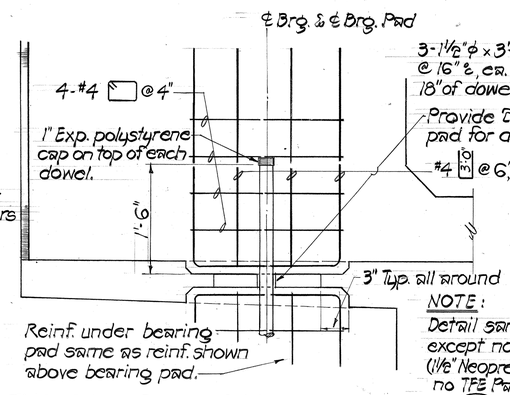

3-1 1/2" φ x 3'-6" smooth dowels @ 16" c, ea. pad. Grease top 18" of dowels, typ.

Provide 2" φ holes in pad for dowels.

#4 @ 6", E.W.

NOTE:
Detail same as Sect. A/5-32 except no steel sole plate. (1 1/2" Neoprene laminated pad only, no TFE Pad or Stainless Steel Pl.)

TYPICAL SECTION - ABUT. Nº 1 (B / 5-32)

Scale: 1 1/2" = 1'-0"

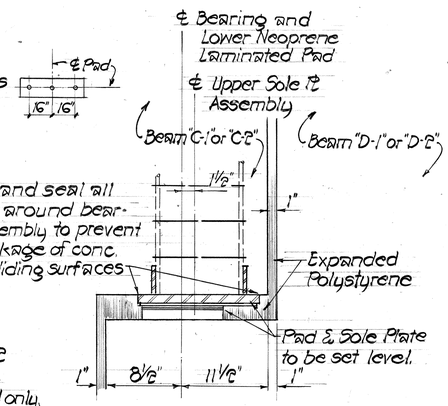

Caulk and seal all joints around bearing assembly to prevent any leakage of conc. btwn. sliding surfaces

NOTE:
1. Vertical surfaces at expanded polystyrene against which concrete is to be placed shall be faced with hardboard or other suitable material which is approved by the Engineer.
2. Sole plate assembly & neoprene laminated pad same as in Det. 1/5-32.
3. Provide shop drawings of bearing assembly for review prior to fabrication.

TYPICAL SECTION - EXP. JOINT (C / 5-32)

Scale: 1 1/2" = 1'-0"

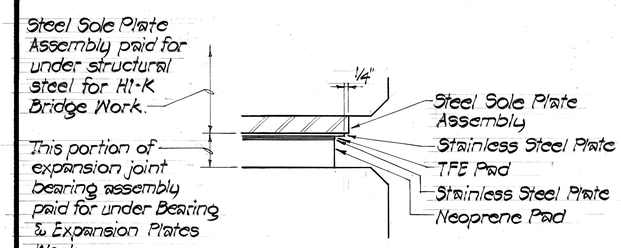

DETAIL (3 / 5-32)

Scale: 3" = 1'-0"

ORIGINAL PLAN	SURVEY PLOTTED BY	DATE
	DRAWN BY	"
	TRACED BY	"
NOTE BOOK	DESIGNED BY	"
	QUANTITIES BY	"
No.	CHECKED BY	"

ENGINEERING DESIGN GROUP, INC.
Consulting Engineers
225 Queen St., Suite 504
Honolulu, Hawaii 96813

EDGAR K. M. LEE
REGISTERED PROFESSIONAL ENGINEER
No. 2150
HAWAII, U.S.A.

This work was prepared by me or under my supervision.

STATE OF HAWAII
DEPARTMENT OF TRANSPORTATION
LAND TRANSPORTATION FACILITIES DIVISION

EXPANSION JOINT BEARING DETAILS

INTERSTATE ROUTE H-1
KAPIOLANI INTERCHANGE ON-RAMP
F.A.I. PROJ. NO. I-H1-1(157):24

Scale: As Noted — Date: 4-10-80

SHEET No. 5-32 OF 5-41 SHEETS

FED. ROAD DIST. NO.	STATE	FED. AID PROJ. NO.	FISCAL YEAR	SHEET NO.	TOTAL SHEETS
HAWAII	HAW.	I-HI-1(157)-24	1979	100	146

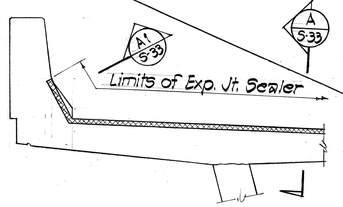

PARTIAL ELEVATION
EXPANSION JOINT
Scale: 1/2" = 1'-0"

VOID

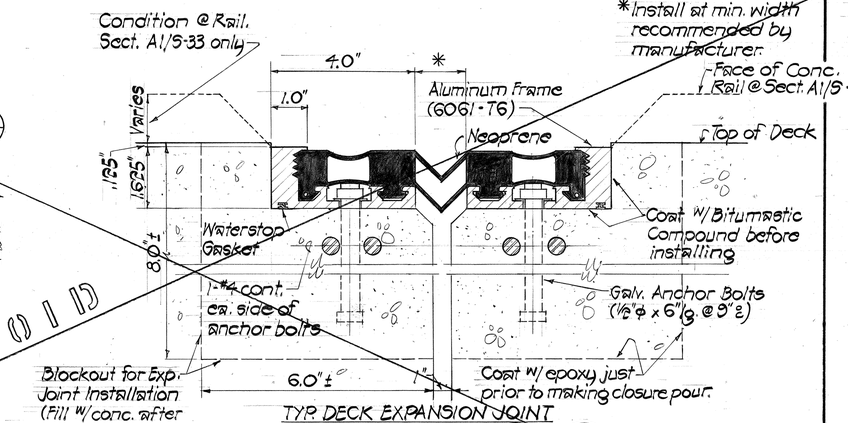

TYP. DECK EXPANSION JOINT

SECTION A 5-33 A1 5-33 Dim. as noted
Scale: Half Scale

NOTE:
The deck expansion joint illustrated is based on the Delastiflex Type SM400 joint. The exact joint configuration will be dependent on the actual type used.

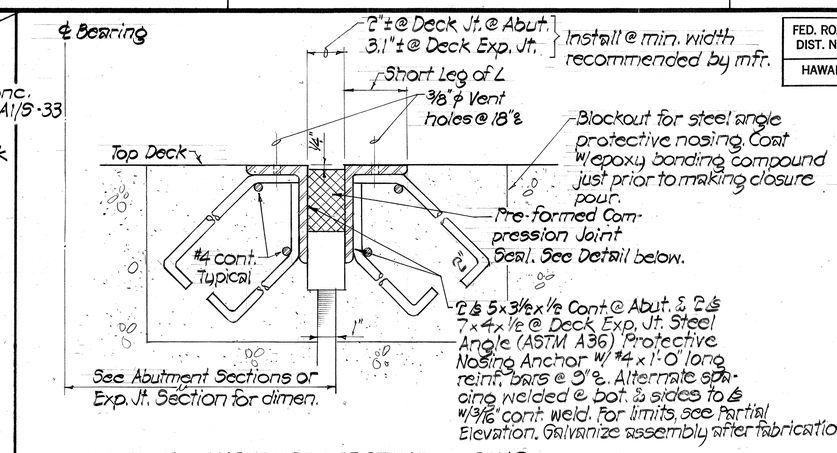

AT STEEL ANGLE PROTECTIVE NOSING

SECTION B 5-33
Scale: 3" = 1'-0"

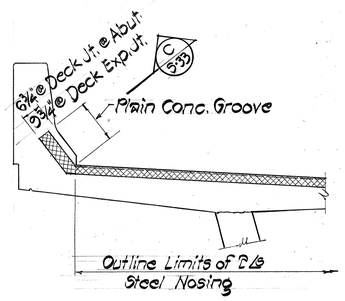

PARTIAL ELEVATION
EXPANSION JOINT
Scale: 1 1/2" = 1'-0"

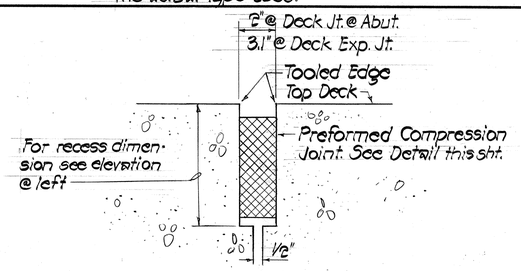

AT PLAIN CONC. GROOVE

SECTION C 5-33
Scale: 3" = 1'-0"

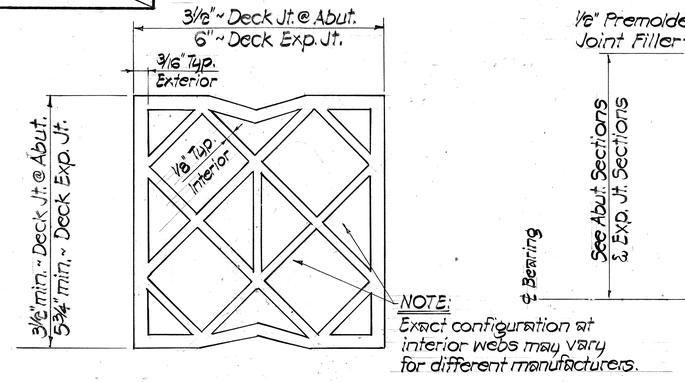

PRE-FORMED COMPRESSION JT. SEAL DETAIL
Full Scale

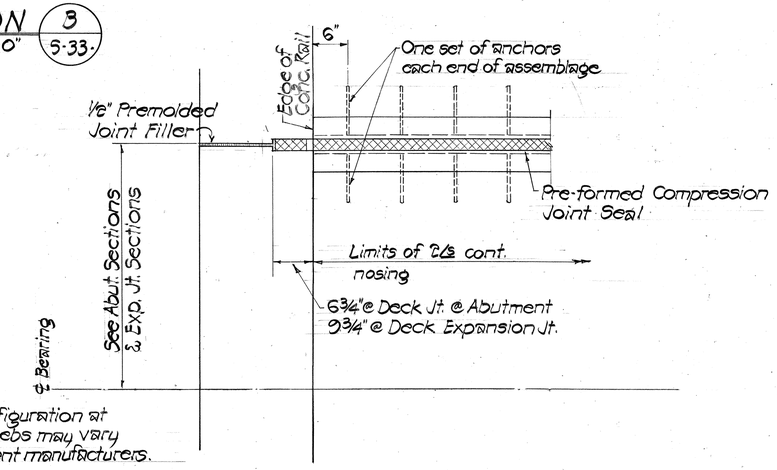

PLAN ~ EXPANSION JT.
Scale: 1" = 1'-0"

NOTES:

1. The details shown indicate the general deck expansion joint installation requirements. The exact details shall be adjusted to suit the recommendations of the manufacturer of the actual deck expansion joint used. Verify all installation requirements and submit any required revisions to the Engineer for review prior to construction.
2. Deck expansion joints shall not be installed until 45 days after all post-tensioning work has been completed. Joint at abutment can be installed anytime after the post-tensioning work has been completed.

ORIGINAL PLAN	SURVEY PLOTTED BY	DATE
	DRAWN BY	"
	TRACED BY	"
NOTE BOOK	DESIGNED BY	"
	QUANTITIES BY	"
No.	CHECKED BY	"

ENGINEERING DESIGN GROUP, INC.
Consulting Engineers
225 Queen St., Suite 504
Honolulu, Hawaii 96813

EDGAR K. M. LEE
REGISTERED PROFESSIONAL ENGINEER
No. 2150
HAWAII, U.S.A.

This work was prepared by me or under my supervision

Edgar K. M. Lee

STATE OF HAWAII
DEPARTMENT OF TRANSPORTATION
LAND TRANSPORTATION FACILITIES DIVISION

EXPANSION JOINT DETAILS

INTERSTATE ROUTE H-1
KAPIOLANI INTERCHANGE ON-RAMP
F.A.I. PROJ. NO. I-H1-1(157):24

Scale: As Noted
Date: 4-10-80

SHEET No. 5-33 OF 5-4 SHEETS

FED. ROAD DIST. NO.	STATE	FED. AID PROJ. NO.	FISCAL YEAR	SHEET NO.	TOTAL SHEETS
HAWAII	HAW.	I-HI-1(157)-24	1979	101	146

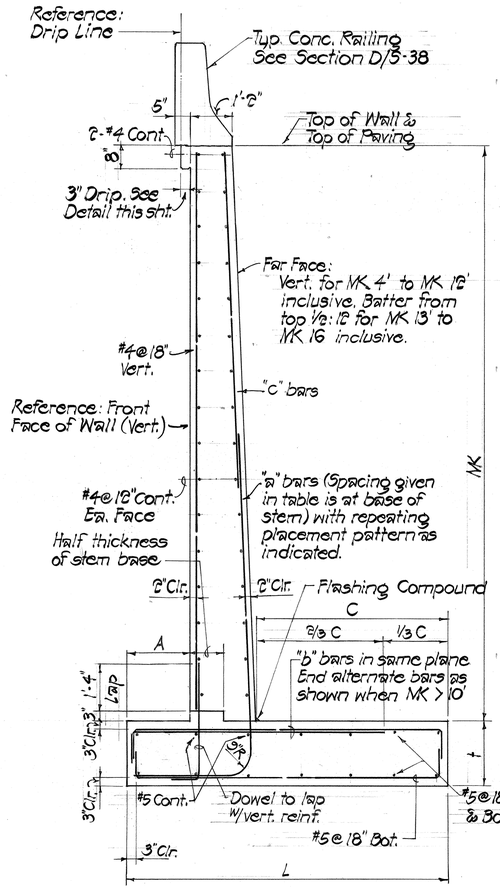

TYPICAL RETAINING WALL SECTION

No Scale

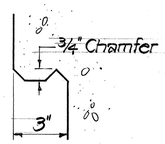

TYP. DRIP DETAIL

No Scale

~ SCHEDULE OF DIMENSIONS & REINFORCING STEEL ~

WALL ON SPREAD FOUNDATIONS							WALL ON PILE FOUNDATIONS						
Maximum "MK"	A	t	L	"a" bars	"b" bars	"c" bars	Max. "MK"	A	t	L	"a" bars	"b" bars	"c" bars
4	6"	14"	3.0'	#5@9"	#5@9"	~							
5	6"	14"	3.5'	#5@9"	#5@9"	~							
6	6"	14"	4.0'	#5@9"	#5@9"	~							
7	12"	14"	5.0'	#5@9"	#5@9"	~	7.P	18"	30"	7.0'	#5@9"	#5@9"	~
8	12"	14"	5.5'	#5@9"	#5@9"	~	8.P	18"	30"	7.0'	#5@9"	#5@9"	~
9	12"	14"	6.0'	#5@7"	#5@7"	~	9.P	18"	30"	7.0'	#5@7"	#5@7"	~
10	12"	14"	7.0'	#6@7"	#6@7"	~	10.P	18"	30"	7.5'	#6@7"	#5@7"	~
11	12"	14"	7.0'	#6@6"	#6@6"	#6@12"	11.P	18"	30"	8.0'	#6@6"	#5@6"	#6@12"
							12.P	18"	30"	8.0'	#6@5"	#5@5"	#6@10"
							13.P	18"	30"	9.0'	#7@8"	#6@8"	#7@16"
							14.P	18"	30"	9.0'	#7@6"	#6@6"	#7@18"
							15.P	18"	30"	9.5'	#7@6"	#6@6"	#7@18"
							16.P	18"	30"	9.5'	#8@6"	#7@6"	#7@18"

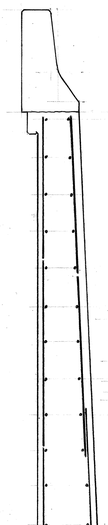

NOTE:
Unless noted or shown otherwise, balance of detail same as "Typ. Retaining Wall Section", this sheet.

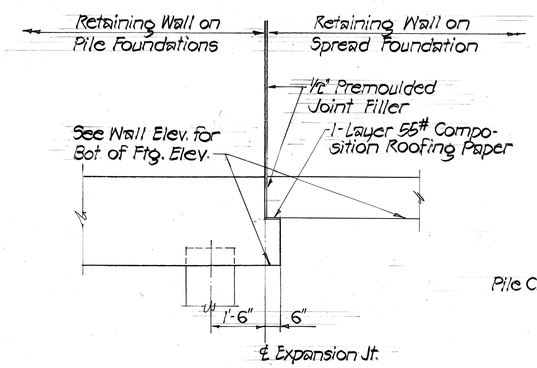

TRANSITION BETWEEN PILE & SPREAD FOUNDATION

No Scale

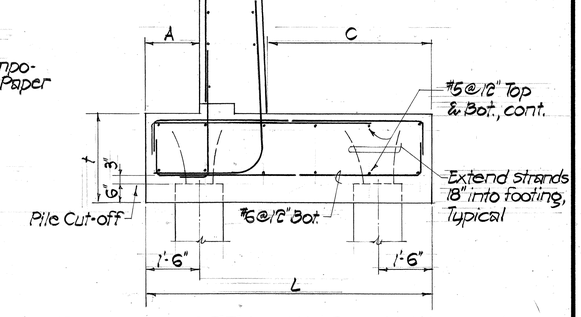

TYPICAL RETAINING WALL ON PILE FOUNDATION

No Scale

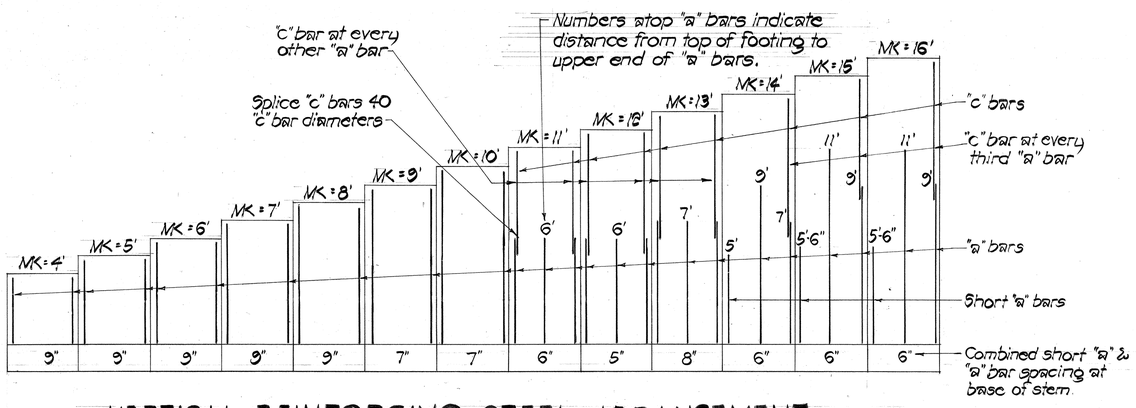

VERTICAL REINFORCING STEEL ARRANGEMENT

No Scale

NOTE:
For Typical Retaining Wall Details, see Sheet № 5-35.

ORIGINAL PLAN	SURVEY PLOTTED BY	DATE
	PLANS PREP. BY	"
	TRACED BY	"
NOTE BOOK	DESIGNED BY	"
	QUANTITIES BY	"
No.	CHECKED BY	"

ENGINEERING DESIGN GROUP, INC.
Consulting Engineers
225 Queen St., Suite 504
Honolulu, Hawaii 96813

EDGAR K. M. LEE
REGISTERED PROFESSIONAL ENGINEER
No. 2150
HAWAII, U.S.A.

This work was prepared by me or under my supervision

Edgar K. M. Lee

STATE OF HAWAII
DEPARTMENT OF TRANSPORTATION
LAND TRANSPORTATION FACILITIES DIVISION

RETAINING WALL SECTION, SCHEDULE AND DETAILS

INTERSTATE ROUTE H-1
KAPIOLANI INTERCHANGE ON-RAMP
F.A.I. PROJ. NO. I-H1-1(157):24

Scale: As Noted — Date: 4-10-80

SHEET No. 6-34 OF 6-41 SHEETS

FED. ROAD DIST. NO.	STATE	FED. AID PROJ. NO.	FISCAL YEAR	SHEET NO.	TOTAL SHEETS
HAWAII	HAW.	I-H1-1(157)24	1979	102	146

NOTE:
Spacing of joints
Expansion = @6'-0" max.
Contraction = @32'-0" max.
} Joint location shall match joints in concrete railing.

For alternate contraction joint and control joint details - See Standard Details. Sht #DB-100

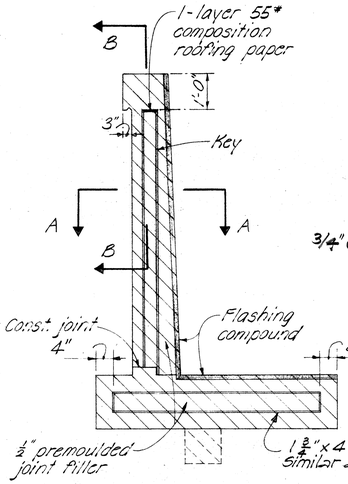

JOINT ELEVATION

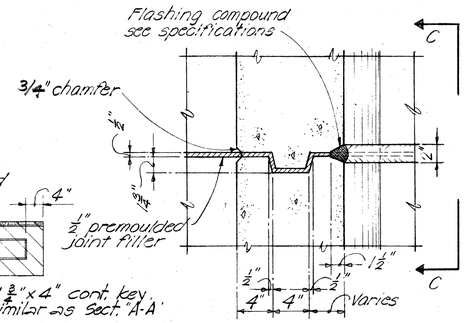

SECTION A-A

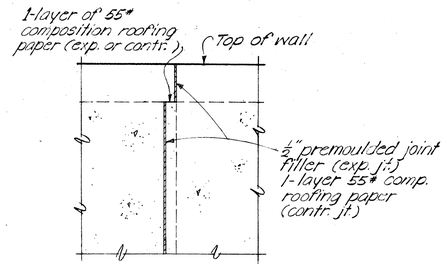

SECTION B-B

TYPICAL EXPANSION JOINT DETAILS No Scale

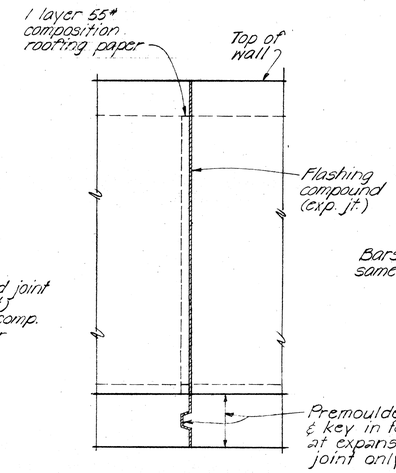

SECTION C-C

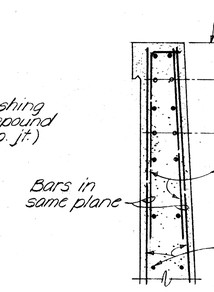

SECTION D-D

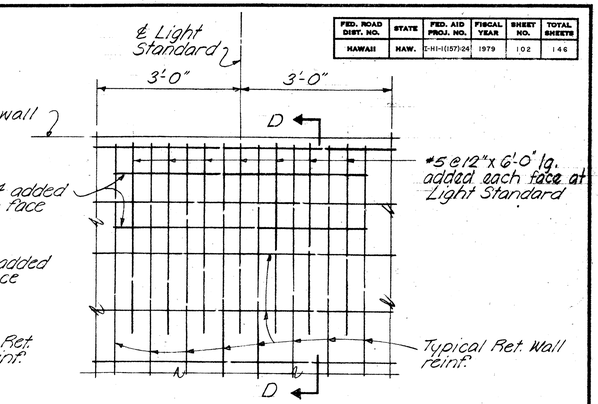

ELEVATION

TYPICAL ADDED REINFORCEMENT AT LIGHT STANDARD BASE No Scale

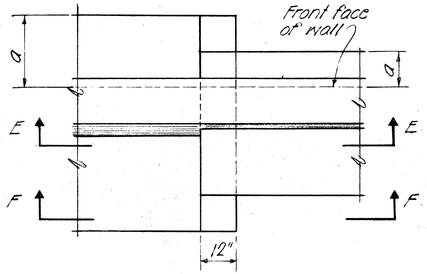

PLAN

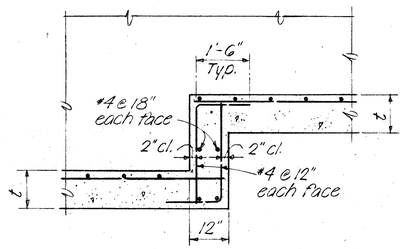

SECTION E-E
AT CONTINUOUS FOOTING

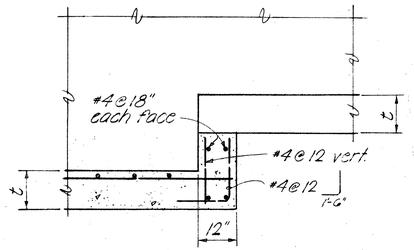

SECTION F-F

TYPICAL FOOTING STEP-UP DETAILS No Scale

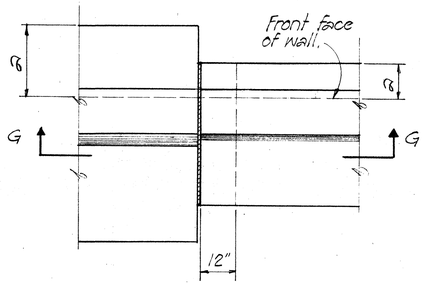

PLAN

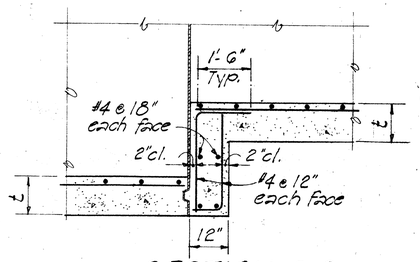

SECTION G-G
AT EXPANSION JOINT

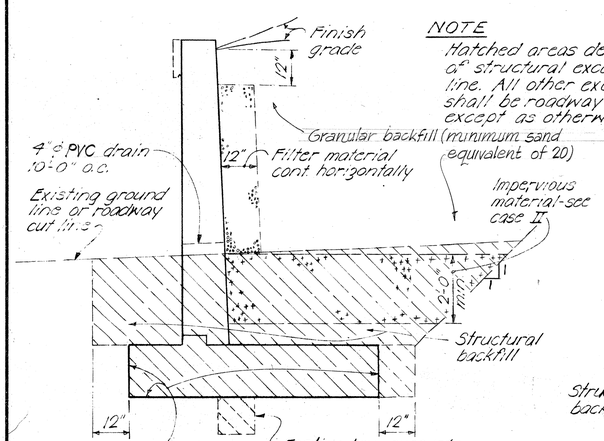

CASE I

NOTE
Hatched areas denote limits of structural excavation pay line. All other excavation shall be roadway excavation except as otherwise noted.

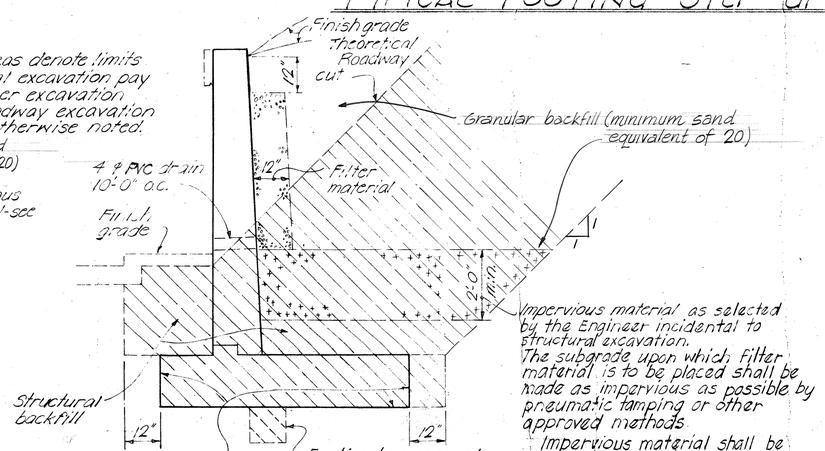

CASE II

STRUCTURAL EXCAVATION & DRAINAGE DETAILS No Scale

ORIGINAL PLAN		DATE
	SURVEY PLOTTED BY	
	DRAWN BY	
	TRACED BY	
	DESIGNED BY	
NOTE BOOK	QUANTITIES BY	
No.	CHECKED BY	

NO.	REVISION	APPROVED BY	DATE

ENGINEERING DESIGN GROUP, INC.
Consulting Engineers
225 Queen St., Suite 504
Honolulu, Hawaii 96813

EDGAR K. M. LEE
REGISTERED PROFESSIONAL ENGINEER
No. 2150
HAWAII, U.S.A.

This work was prepared by me or under my supervision

STATE OF HAWAII
DEPARTMENT OF TRANSPORTATION
LAND TRANSPORTATION FACILITIES DIVISION

RETAINING WALL DETAILS

INTERSTATE ROUTE H-1
KAPIOLANI INTERCHANGE ON-RAMP
F.A.I. PROJ. NO. I-H1-1 (157) : 24

Scale: None
Date: 4-10-80

SHEET No 5-35 OF 5-4 SHEETS

PRINTED ON NO. 1000H CLEARPRINT

FED. ROAD DIST. NO.	STATE	FED. AID PROJ. NO.	FISCAL YEAR	SHEET NO.	TOTAL SHEETS
HAWAII	HAW.	I-HI-1(157)-24	1979	103	146

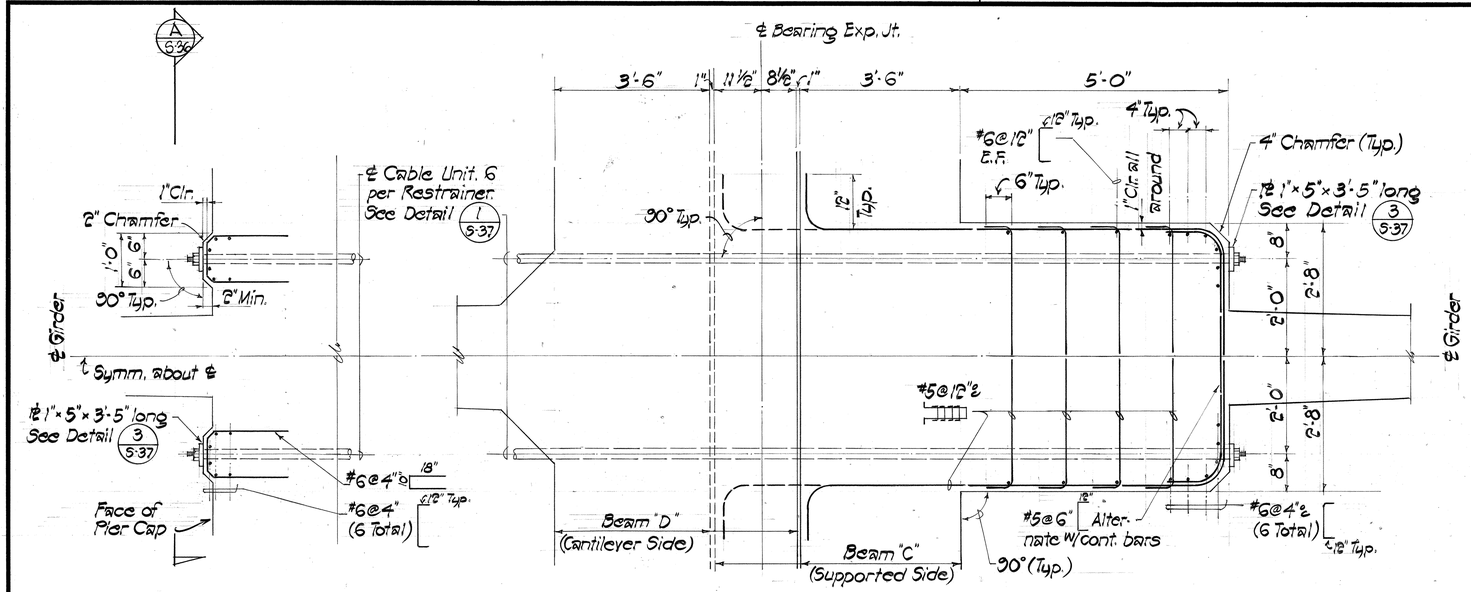

PLAN ~ SECTION @ TYP. INTERIOR HINGE RESTRAINER

Scale: 3/4" = 1'-0"

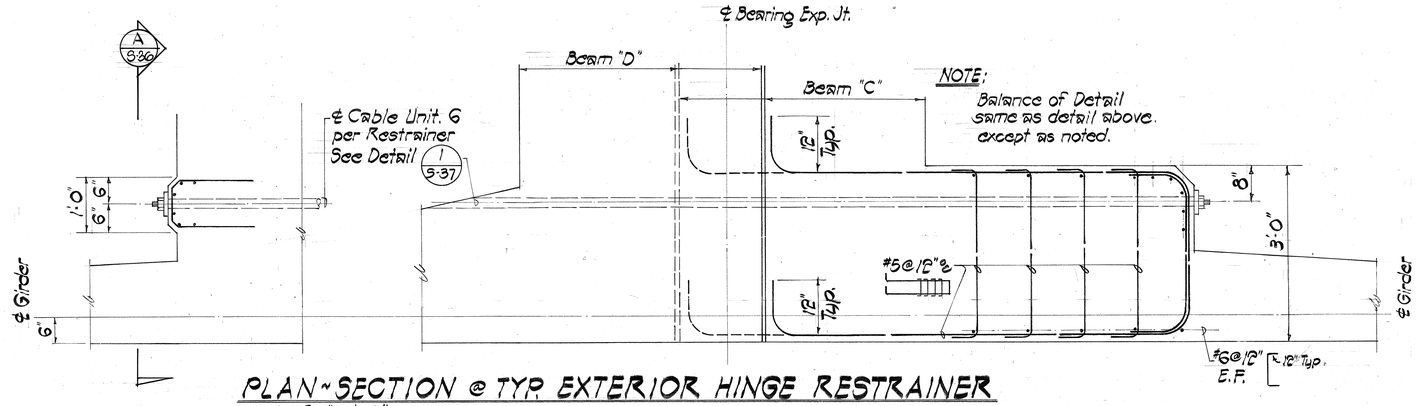

NOTE:
Balance of Detail same as detail above, except as noted.

PLAN ~ SECTION @ TYP. EXTERIOR HINGE RESTRAINER

Scale: 3/4" = 1'-0"

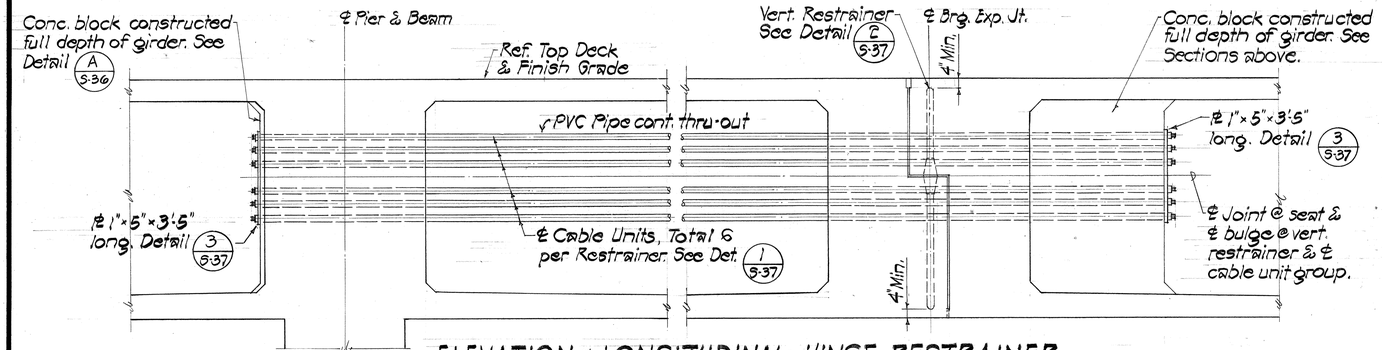

ELEVATION ~ LONGITUDINAL HINGE RESTRAINER

Scale: 3/8" = 1'-0"

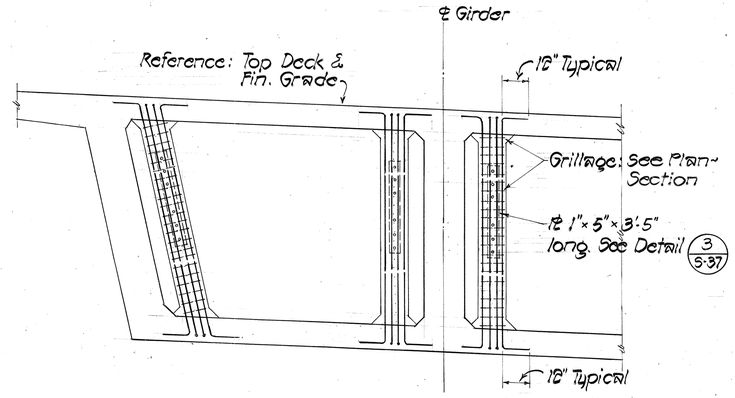

SECTION A 5-36

Scale: 3/8" = 1'-0"

NOTES:

1. Cable units shall not be anchored at both ends prior to prestressing
2. Location of access openings shall be the Contractors option, maximum size of access openings shall be 2'-0"×2'-0". See Std. Dwg. Sht. #DB 101-3, form removal opening similar.
3. All steel parts shall be galvanized.
4. Longitudinal hinge restrainers shall be installed at 90° to expansion joint except where otherwise indicated on Deck Framing Plans.
5. Hinge restrainer shown is at Sta. 8+94. Hinge restrainer at Sta. 4+36 sim., but opposite hand.

ENGINEERING DESIGN GROUP, INC.
Consulting Engineers
225 Queen St., Suite 306
Honolulu, Hawaii 96813

EDGAR K. M. LEE — REGISTERED PROFESSIONAL ENGINEER No. 2150 — HAWAII, U.S.A.

This work was prepared by me or under my supervision

STATE OF HAWAII
DEPARTMENT OF TRANSPORTATION
LAND TRANSPORTATION FACILITIES DIVISION

LONGITUDINAL HINGE RESTRAINER PLAN, SECTIONS & ELEVATIONS

INTERSTATE ROUTE H-1
KAPIOLANI INTERCHANGE ON-RAMP
F.A.I. PROJ. NO. I-H1-1(157):24

Scale: As Noted — Date: 4-10-80

SHEET No. S-36 OF S-40 SHEETS

ORIGINAL PLAN	SURVEY PLOTTED BY	DATE
	DRAWN BY	"
	TRACED BY	"
NOTE BOOK	DESIGNED BY	"
No.	QUANTITIES BY	"
	CHECKED BY	"

FED. ROAD DIST. NO.	STATE	FED. AID PROJ. NO.	FISCAL YEAR	SHEET NO.	TOTAL SHEETS
HAWAII	HAW.	I-HI-1(157)24	1979	104	146

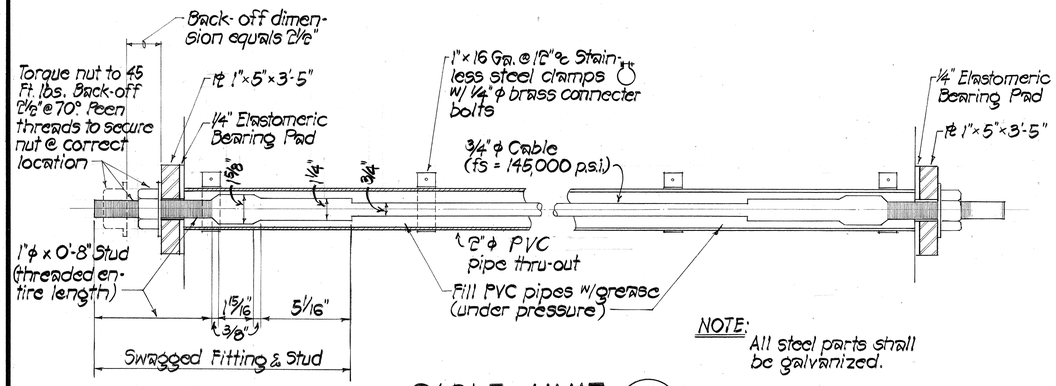

NOTE: All steel parts shall be galvanized.

CABLE UNIT (1 / S-37)

Scale: 3" = 1'-0"

NOTE:

1. Grease (heavy duty) horizontal restrainer cables and encase greased cables with 2-inch PVC ducts. All joints in the PVC ducts shall be sealed water tight as approved by the engineer.

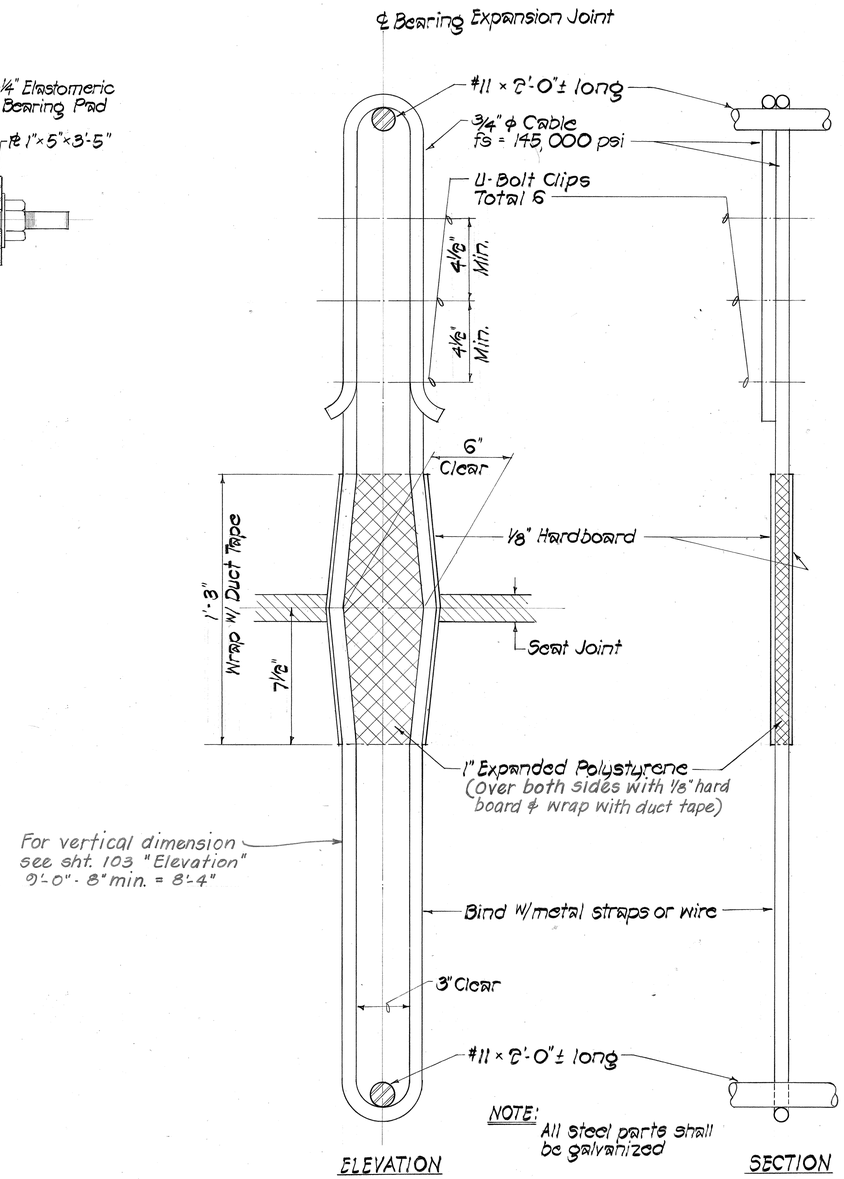

NOTE: All steel parts shall be galvanized

VERTICAL RESTRAINER (2 / S-37)

Scale: 3" = 1'-0"

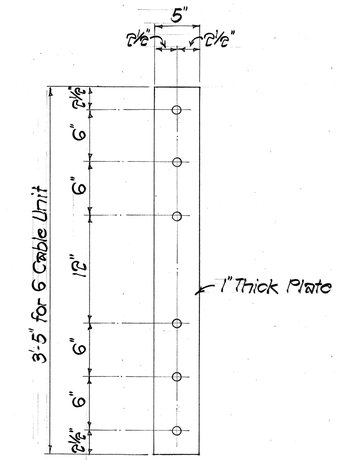

PLATE DETAIL (3 / S-37)

Scale: 1 1/2" = 1'-0"

NOTE: Plates shall be considered part of restrainer unit work.

NOTE: Shop Drawings of all longitudinal & vertical restrainers shall be submitted for review.

DATE	REVISION
6/16/80	On Detail (1/S-37) revised a note & added note No. 1, per Addendum No. 2.

ENGINEERING DESIGN GROUP, INC.
Consulting Engineers
225 Queen St., Suite 504
Honolulu, Hawaii 96813

EDGAR K. M. LEE
REGISTERED PROFESSIONAL ENGINEER
No. 2150
HAWAII, U.S.A.

This work was prepared by me or under my supervision

STATE OF HAWAII
DEPARTMENT OF TRANSPORTATION
LAND TRANSPORTATION FACILITIES DIVISION

VERTICAL RESTRAINER ~ ELEVATION & SECTION, CABLE UNIT DETAIL

INTERSTATE ROUTE H-1
KAPIOLANI INTERCHANGE ON-RAMP
F.A.I. PROJ. NO. I-H1-1(157):24

Scale: As Noted — Date: 4-10-80

SHEET No. S-37 OF S-41 SHEETS

ORIGINAL PLAN	SURVEY PLOTTED BY	DATE
	DRAWN BY	"
	TRACED BY	"
NOTE BOOK	DESIGNED BY	"
	QUANTITIES BY	"
No.	CHECKED BY	"

FED. ROAD DIST. NO.	STATE	FED. AID PROJ. NO.	FISCAL YEAR	SHEET NO.	TOTAL SHEETS
HAWAII	HAW.	I-HI-1(157)24	1979	105	146

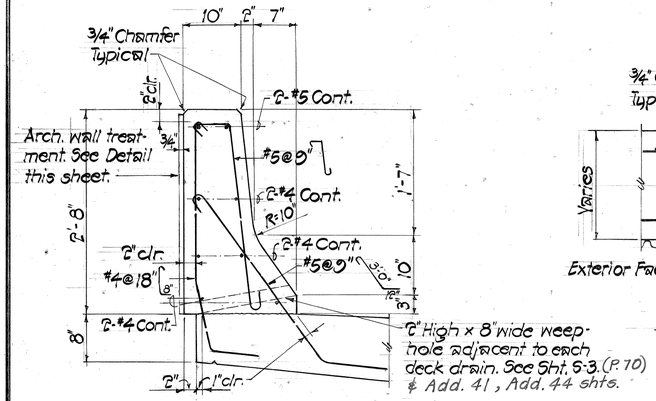

TYP. CONC. RAILING SECTION (A / 5-38)
Scale: 1" = 1'-0"

NOTE: See Sht. 5-41 for modified conc. railing where light pole brackets occur.

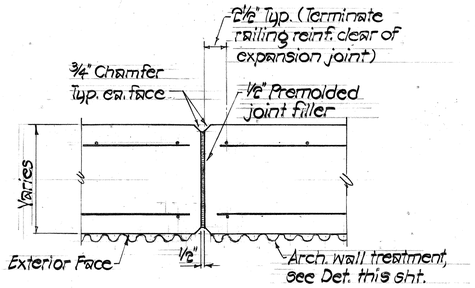

AT EXPANSION JOINT

SECTION (B / 5-38)
Scale: 1 1/2" = 1'-0"

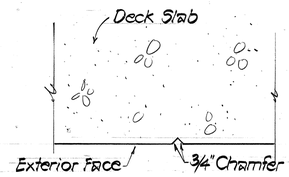

GROOVE IN DECK SLAB BELOW RAILING EXPANSION JOINT

SECTION (C / 5-38)
Scale: 1 1/2" = 1'-0"

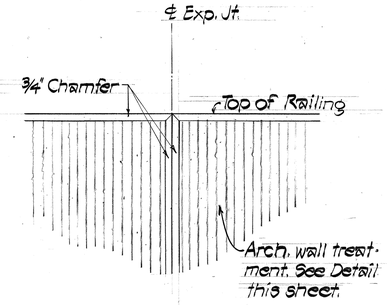

DETAIL (1 / 5-38)
Scale: 1 1/2" = 1'-0"

Space conc. rail exp. joint evenly between bridge deck exp. joints but not more than 32' o.c. Railing exp. joints to be at right angle to roadway grade, typ. Where light poles occur, adjust exp. joint spacing so that joints are at least 3' away from poles. See Det. 1/5-41.

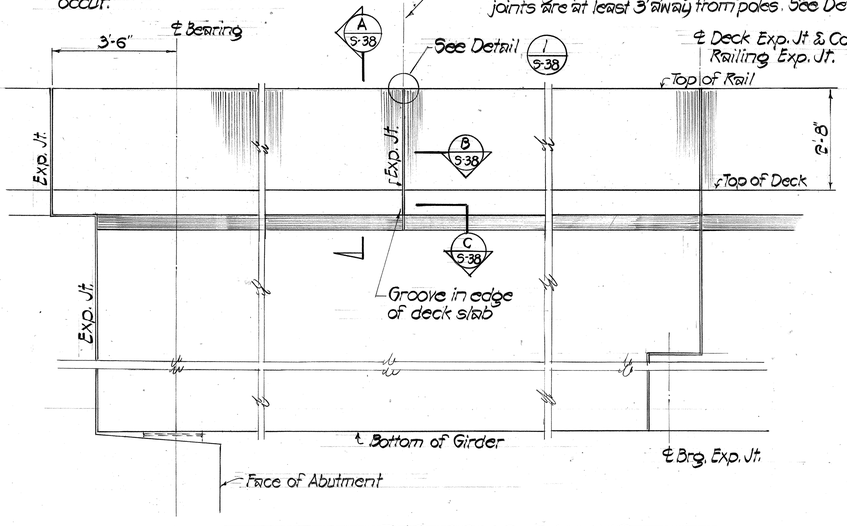

ELEVATION ~ TYP. CONC. RAILING
Scale: 1/8" = 1'-0"

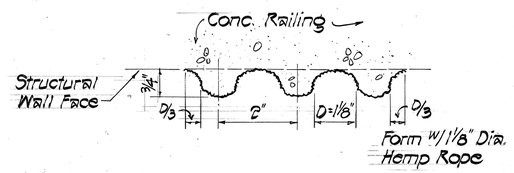

FRACTURED ROPE TYPE

ARCH. WALL TREATMENT DETAIL (2 / 5-38)
Not to Scale

NOTE: Cost of arch. wall treatment on pier columns shall be incidental to conc. work & arch. wall treatment on conc. railings shall be incidental to conc. railing work.

NOTE:
Unless noted or shown otherwise, balance of detail same as Sect. A/5-38

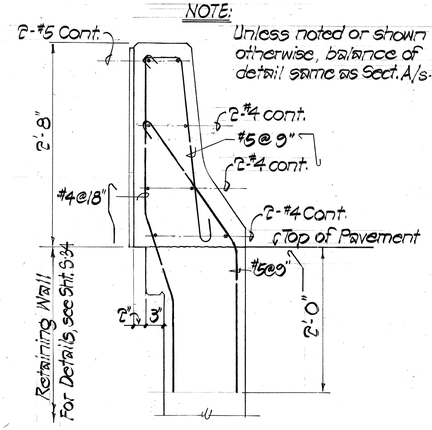

TYP. CONC. RAILING SECTION AT RETAINING WALL (D / 5-38)
Scale: 1" = 1'-0"

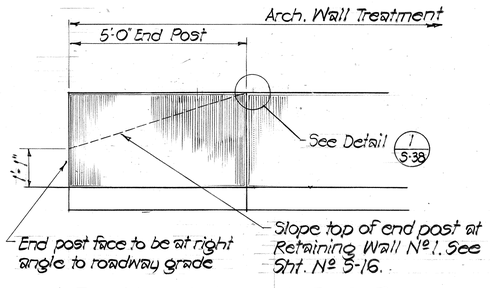

ELEVATION ~ TYP. END POST
Scale: 1/8" = 1'-0"

SURVEY PLOTTED BY	DATE
DRAWN BY	
TRACED BY	
DESIGNED BY	
QUANTITIES BY	
CHECKED BY	
ORIGINAL PLAN	
NOTE BOOK	
No.	

ENGINEERING DESIGN GROUP, INC.
Consulting Engineers
225 Queen St., Suite 504
Honolulu, Hawaii 96813

EDGAR K. M. LEE
REGISTERED PROFESSIONAL ENGINEER
No. 2150
HAWAII, U.S.A.

This work was prepared by me or under my supervision.

STATE OF HAWAII
DEPARTMENT OF TRANSPORTATION
LAND TRANSPORTATION FACILITIES DIVISION

CONCRETE RAILING SECTIONS & DETAILS

INTERSTATE ROUTE H-1
KAPIOLANI INTERCHANGE ON-RAMP
F.A.I. PROJ. NO. I-H1-1(157):24

Scale: As Noted — Date: 4-10-80

SHEET No. 5-38 OF 5-41 SHEETS

FED. ROAD DIST. NO.	STATE	FED. AID PROJ. NO.	FISCAL YEAR	SHEET NO.	TOTAL SHEETS
HAWAII	HAW.	I-HI-1(157)24	1979	106	146

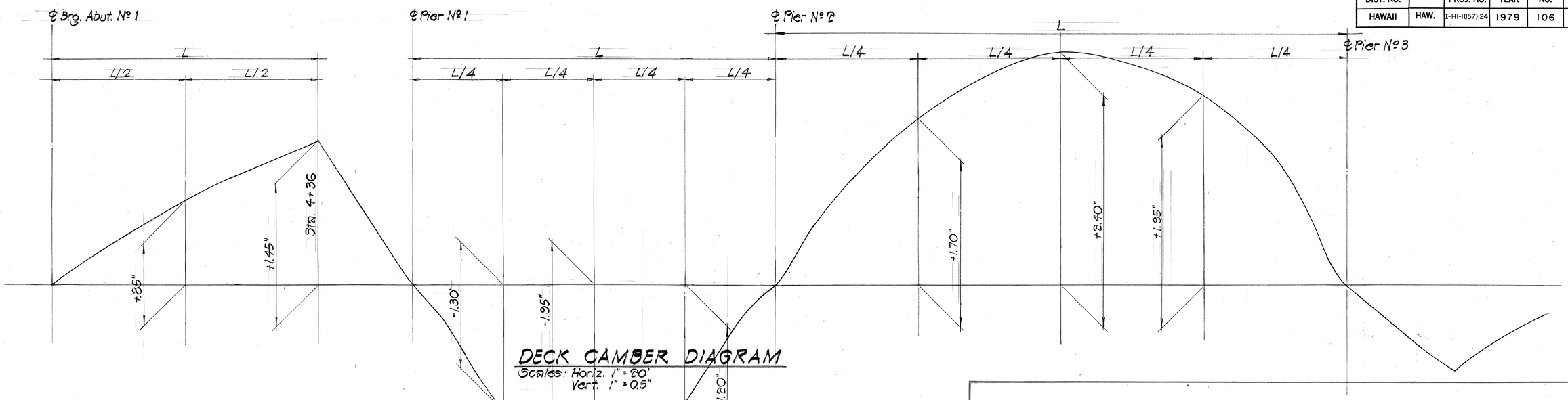

DECK CAMBER DIAGRAM

Scales: Horiz. 1" = 20'
Vert. 1" = 0.5"

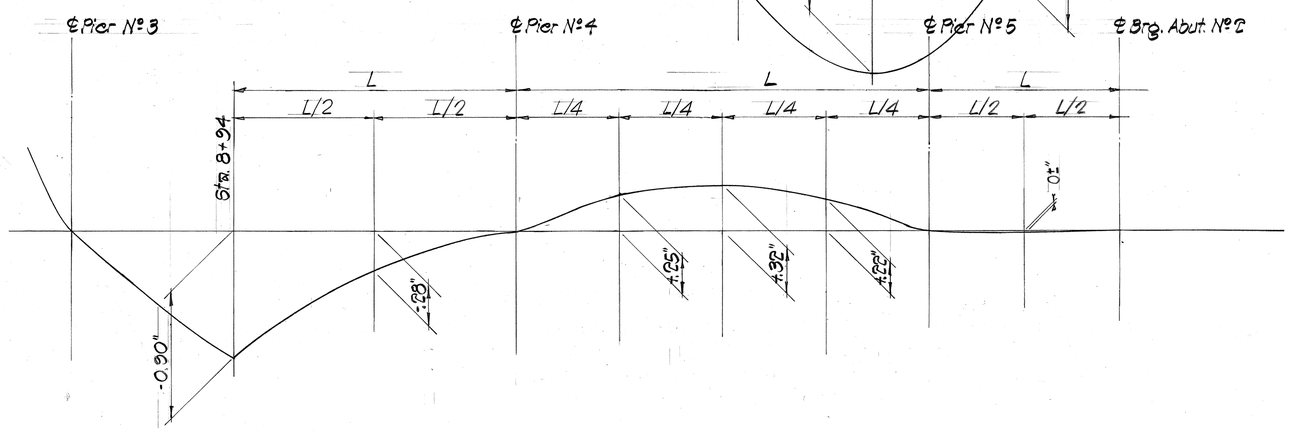

DECK CAMBER DIAGRAM

Scales: Horiz. 1" = 20'
Vert. 1" = 0.5"

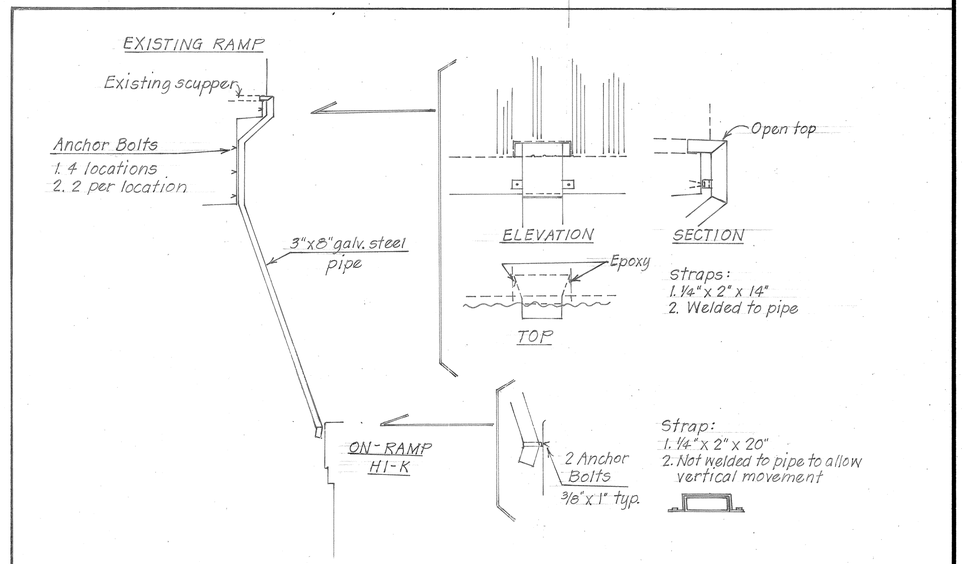

NEW DOWNSPOUT FROM OFF-RAMP HI-I

C.C.O. # 30

N.T.S.

ENGINEERING DESIGN GROUP, INC.
Consulting Engineers
225 Queen St., Suite 304
Honolulu, Hawaii 96813

EDGAR K. M. LEE
REGISTERED PROFESSIONAL ENGINEER
No. 2150
HAWAII, U.S.A.

This work was prepared by me or under my supervision.

STATE OF HAWAII
DEPARTMENT OF TRANSPORTATION
LAND TRANSPORTATION FACILITIES DIVISION

DECK CAMBER DIAGRAM

INTERSTATE ROUTE H-1
KAPIOLANI INTERCHANGE ON-RAMP
F.A.I. PROJ. NO. I-H1-1(157):24

Scale: As Noted — Date: 4-10-80

SHEET No. 5-39 OF 5-41 SHEETS

ORIGINAL PLAN	SURVEY PLOTTED BY	DATE
	DRAWN BY	"
	TRACED BY	"
NOTE BOOK	DESIGNED BY	"
	QUANTITIES BY	"
No.	CHECKED BY	"

FED. ROAD DIST. NO.	STATE	FED. AID PROJ. NO.	FISCAL YEAR	SHEET NO.	TOTAL SHEETS
HAWAII	HAW.	I-HI-1(157)-24	1979	107	146

} Denotes changes to sht #107.

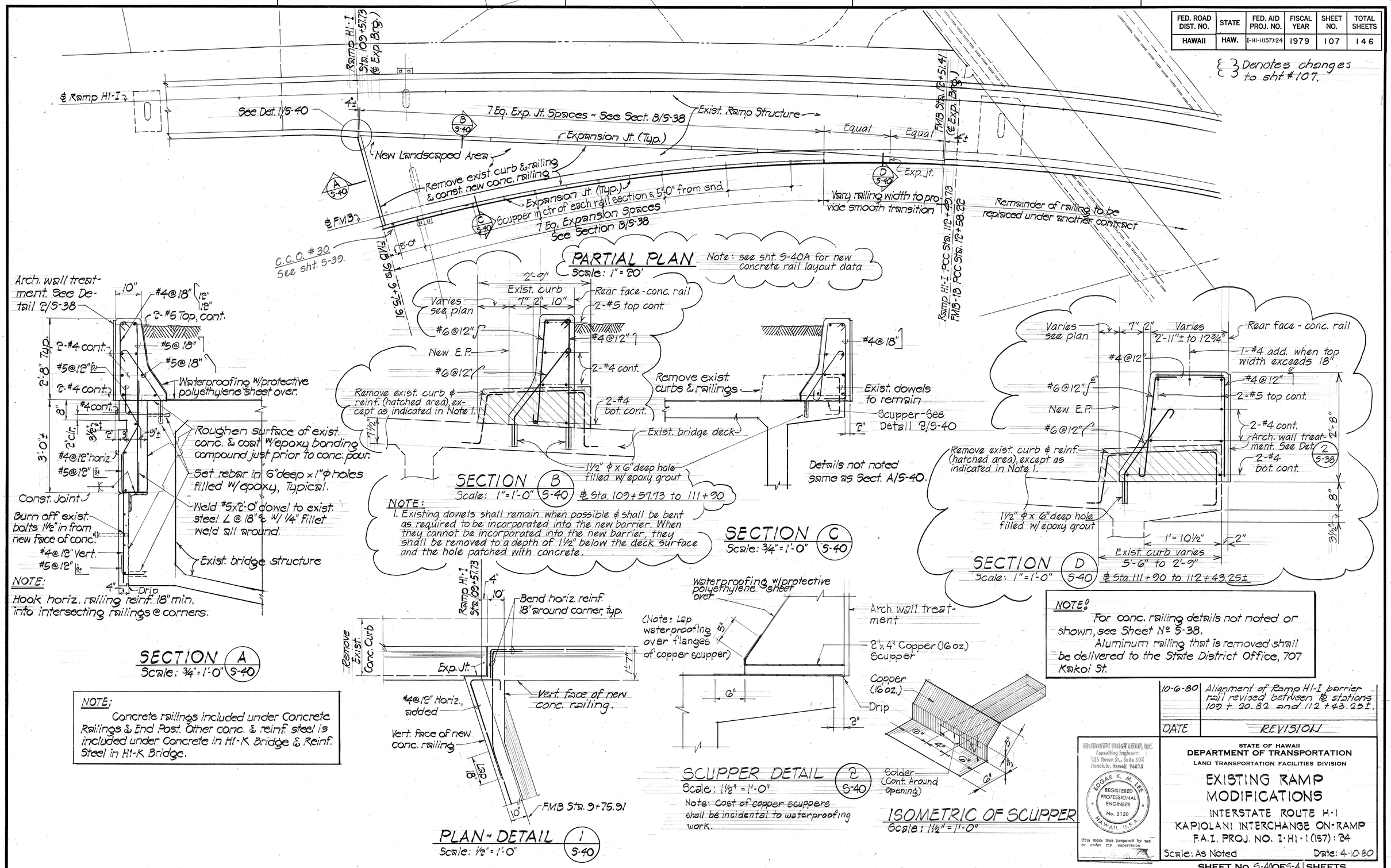

NOTE:
Concrete railings included under Concrete Railings & End Post. Other conc. & reinf. steel is included under Concrete in HI-K Bridge & Reinf. Steel in HI-K Bridge.

DATE	REVISION
10-6-80	Alignment of Ramp HI-I barrier rail revised between ℄ stations 100 + 20.82 and 112 + 43.25±.

ENGINEERING DESIGN GROUP, INC.
Consulting Engineers
1225 Ocean St., Suite 504
Honolulu, Hawaii 96813
EDGAR K. M. LEE
REGISTERED PROFESSIONAL ENGINEER
No. 2150
HAWAII, U.S.A.
This work was prepared by me or under my supervision.

STATE OF HAWAII
DEPARTMENT OF TRANSPORTATION
LAND TRANSPORTATION FACILITIES DIVISION

EXISTING RAMP MODIFICATIONS

INTERSTATE ROUTE H-1
KAPIOLANI INTERCHANGE ON-RAMP
F.A.I. PROJ. NO. I-HI-1(157):24

Scale: As Noted
Date: 4-10-80

SHEET No. S-40 OF S-41 SHEETS

ORIGINAL PLAN
SURVEY PLOTTED BY
DRAWN BY
TRACED BY
DESIGNED BY
NOTE BOOK
QUANTITIES BY
No.
CHECKED BY
DATE

13-2-5

C.0.107

FED. ROAD DIST. NO.	STATE	FED. AID PROJ. NO.	FISCAL YEAR	SHEET NO.	TOTAL SHEETS
HAWAII	HAW.	F-HI 1(157):24	1979	1075-1	146

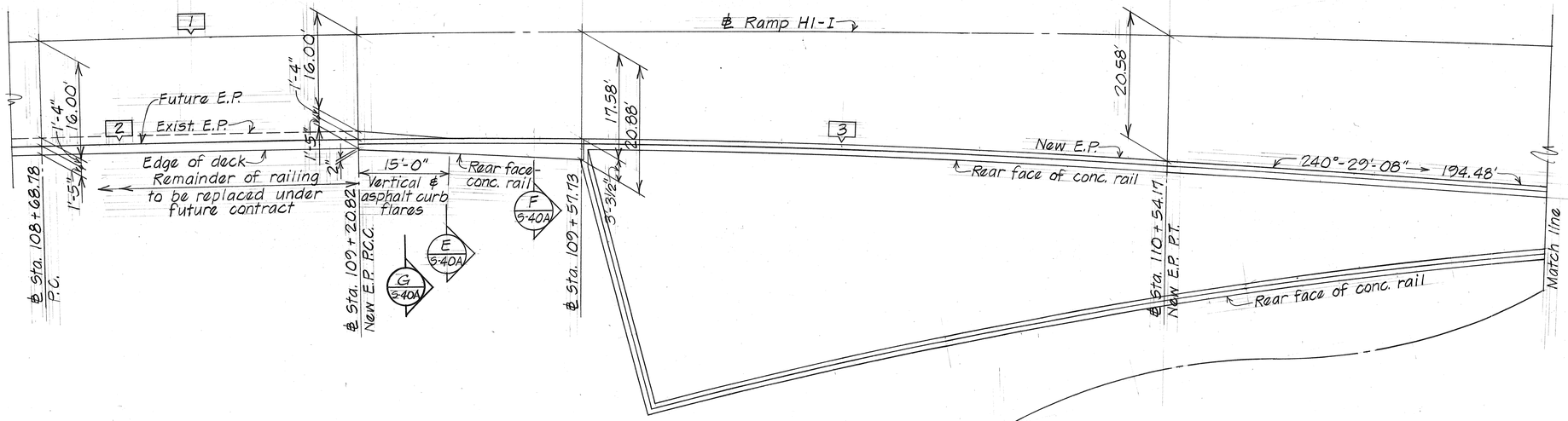

CURVE DATA	1	2	3
△	5°-27'-24"	0°-44'-43.50"	4°-42'-40.50"
△/2	2°-43'-42"	0°-22'-21.75"	2°-21'-20.25"
Radius	4000.00'	3982.67'	1614.91'
Tangent	190.62'	25.91'	66.43'
Chord Length	380.80'	51.81'	132.75'
Length of Curve	380.95'	51.81'	132.79'

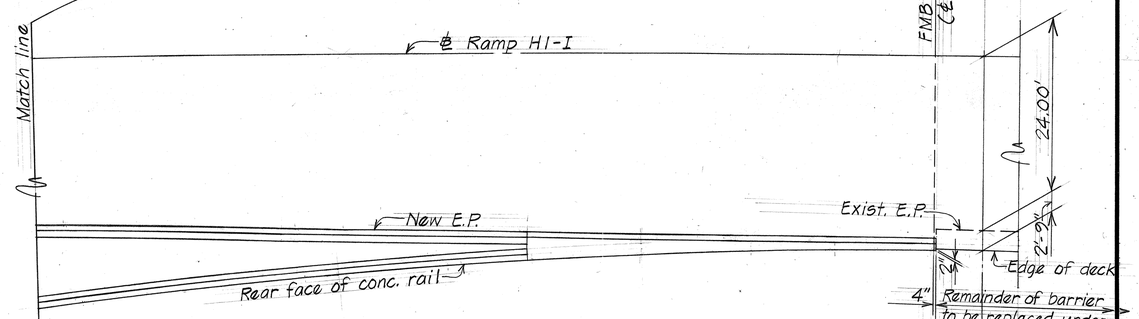

PARTIAL PLAN

Scale: 1" = 10'-0"

Note: For additional details see Sht. S-40

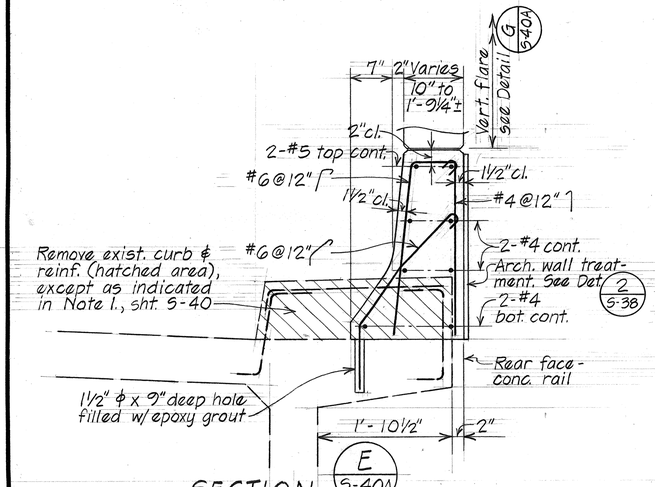

SECTION E 5-40A

RAMP HI-I STA. 109+28.02 TO 109+41

Scale: 1" = 1'-0"

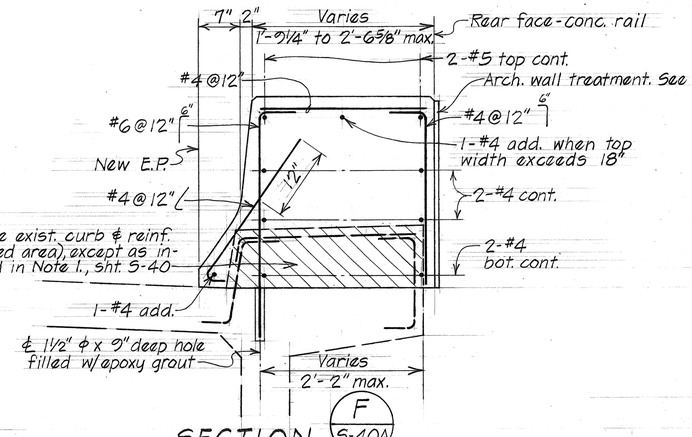

SECTION F 5-40A

RAMP HI-I STA. 109+41 TO 109+57.73

Scale: 1" = 1'-0"

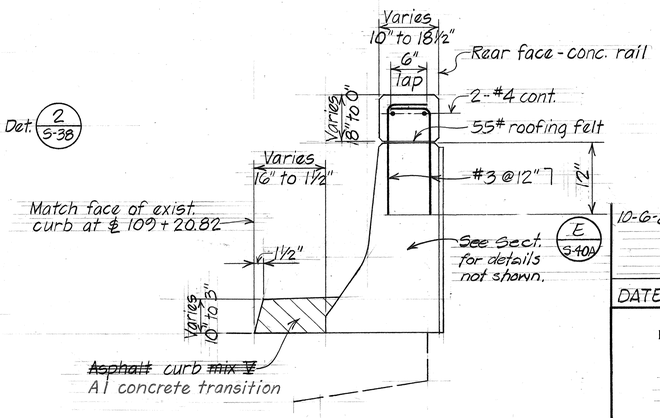

TEMPORARY VERTICAL FLARE & ASPHALT CURB FLARE DETAIL G 5-40A

RAMP HI-I STA. 109+20.82 TO 109+35.82

RAMP HI-I STA. 109+20.82 TO 109+30.82

Scale: 1" = 1'-0"

DATE	REVISION
10-6-80	Sheet added to Contract Plan set for additional details required on sheet no. C.0.107.

STATE OF HAWAII
DEPARTMENT OF TRANSPORTATION
LAND TRANSPORTATION FACILITIES DIVISION

EXISTING RAMP MODIFICATIONS

INTERSTATE ROUTE H-1
KAPIOLANI INTERCHANGE ON-RAMP
F.A.I. PROJ. NO. I-HI-1(157):24

Scale: As Noted Date:

SHEET No. S-40A OF S-41 SHEETS

C.0.107 S-1

SURVEY PLOTTED BY		DATE
DRAWN BY		"
TRACED BY		"
DESIGNED BY		"
QUANTITIES BY		"
CHECKED BY		"
ORIGINAL PLAN	NOTE BOOK	No.

13-2-5

FED. ROAD DIST. NO.	STATE	FED. AID PROJ. NO.	FISCAL YEAR	SHEET NO.	TOTAL SHEETS
HAWAII	HAW.	I-H1-1(157)24	1979	108	146

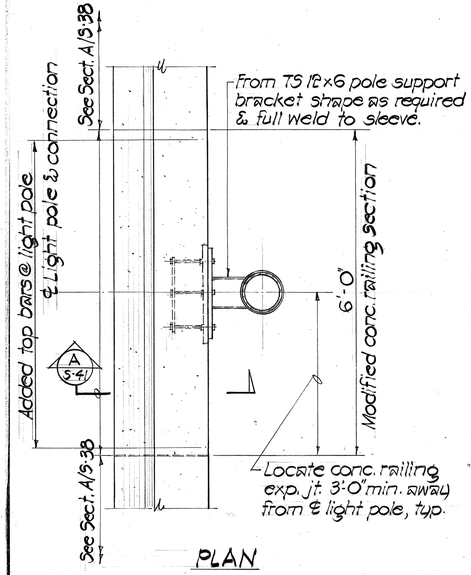

PLAN

LIGHT POLE CONNECTION (1 / S-41)

Scale: 3/4" = 1'-0"

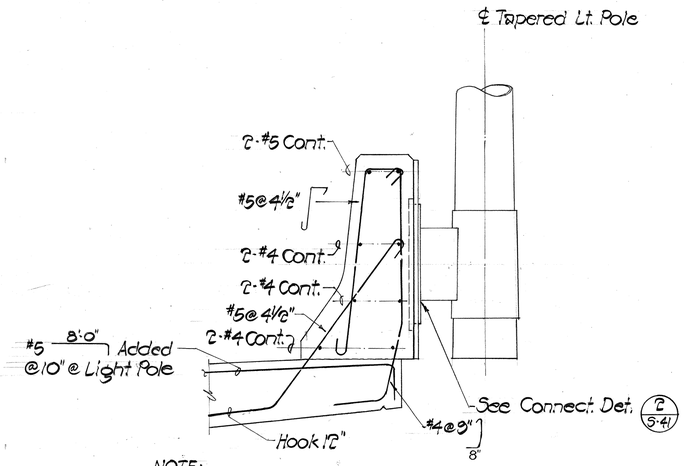

NOTE: Details not noted or shown, same as Sect. A/S-38.

SECTION (A / S-41)

Scale: 1" = 1'-0"

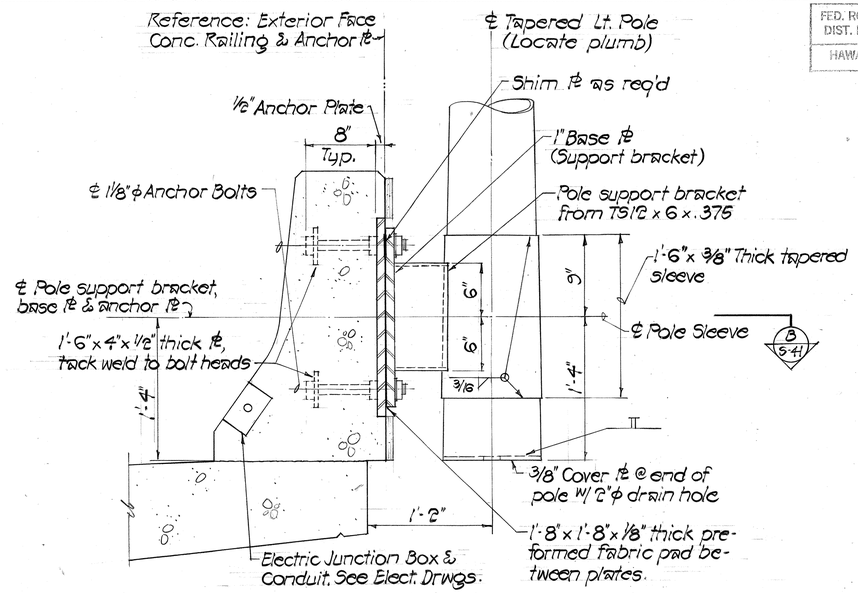

CONNECTION DETAIL (2 / S-41)

Scale: 1½" = 1'-0"

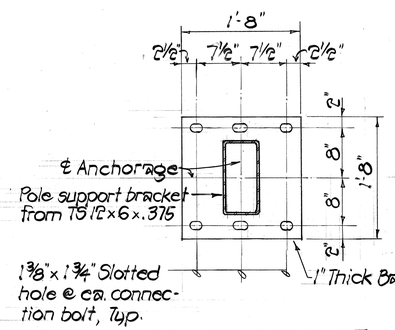

POLE SUPPORT BRACKET & BASE 12 ASSEMBLAGE (3 / S-41)

Scale: 1" = 1'-0"

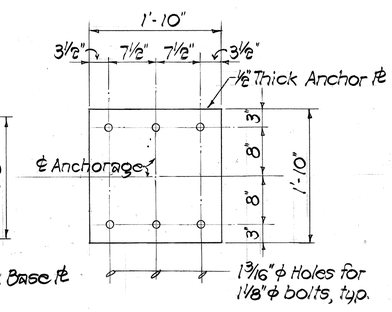

BRACKET ANCHOR 12 (4 / S-41)

Scale: 1" = 1'-0"

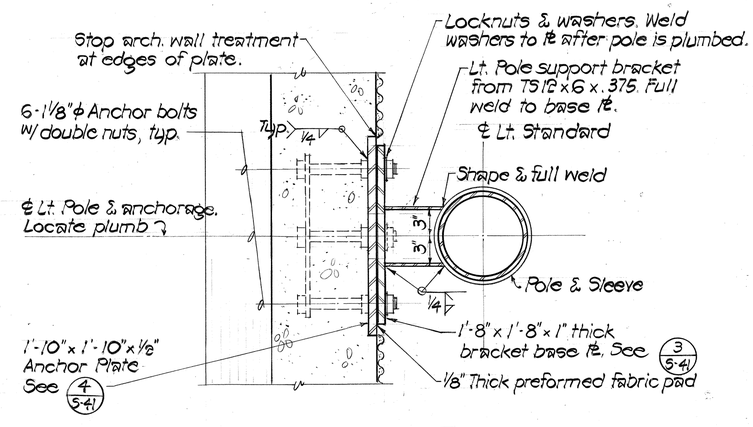

SECTION (B / S-41)

Scale: 1½" = 1'-0"

NOTE:
Light pole support bracket & base plate assemblage, bracket anchor plate, bolts, nuts, washers and anchor plates to be hot dip galvanized after fabrication.

ORIGINAL PLAN | SURVEY PLOTTED BY | DRAWN BY | TRACED BY | DESIGNED BY | QUANTITIES BY | CHECKED BY | DATE | NOTE BOOK | No.

ENGINEERING DESIGN GROUP, INC.
Consulting Engineers
225 Queen St., Suite 504
Honolulu, Hawaii 96813

EDGAR K. M. LEE
REGISTERED PROFESSIONAL ENGINEER
No. 2150
HAWAII, U.S.A.

This work was prepared by me or under my supervision.

STATE OF HAWAII
DEPARTMENT OF TRANSPORTATION
LAND TRANSPORTATION FACILITIES DIVISION

LIGHT POLE CONNECTION DETAILS

INTERSTATE ROUTE H-1
KAPIOLANI INTERCHANGE ON-RAMP
F.A.I. PROJ. NO. I-H1-1(157)-24

Scale: As Noted | Date: 4-10-80

SHEET No. 5-41 OF 5-41 SHEETS

CATALOG NUMBER	POLE DATA "A"	TOP O.D. × BASE O.D. × GA	"B"	"C"	"D"	ANCHOR BOLT (ASTM A-307)
A-250-024	25'-0"	3 7/8" × 5 5/16" × 10	11 1/2"	11 1/2"	1"	1" x 36" x 4"
A-280-024	28'-6"	3 7/8" × 7 3/4" × 10	11 1/2"	11 1/2"	1"	1" x 36" x 4"
* A-300-024	30'-0"	3 7/8" × 8" × 10	11 1/2"	11 1/2"	1"	1" x 36" x 4"
A-350-024	35'-0"	3 7/8" × 8 11/16" × 10	11 1/2"	11 1/2"	1 1/4"	1" x 36" x 4"
A-400-024	40'-0"	3 7/8" × 9 3/8" × 10	13 1/2"	12 1/2"	1 1/4"	1" x 36" x 4"
A-450-024	45'-0"	3 7/8" × 10 1/16" × 10	16"	14 1/2"	1 1/4"	1 x 36 x 4
A-260-024	26'-6"	3 7/8" × 7 1/2" × 10	11 1/2"	11 1/2"	1"	1" x 36" x 4"

ARM DATA "E"	"F"
4'-0"	9"
5'-0"	11"
6'-0"	1'-3"
8'-0"	2'-3"

FLAG	ITEM NO.	QUANTITY THIS DWG.	DESCRIPTION

FED. ROAD DIST. NO.	STATE	FED. AID PROJ. NO.	FISCAL YEAR	SHEET NO.	TOTAL SHEETS
HAWAII	HAW.	I-HI-1(157)24	1978	108S-1	146

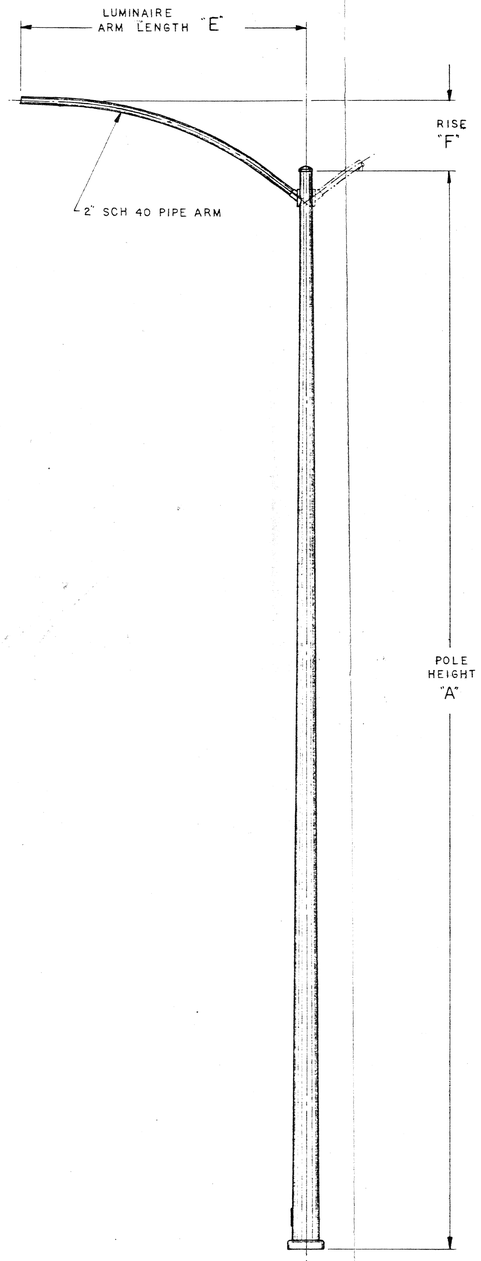

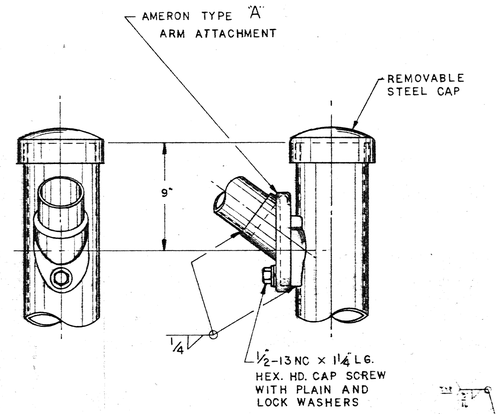

ARM CONNECTION DETAIL

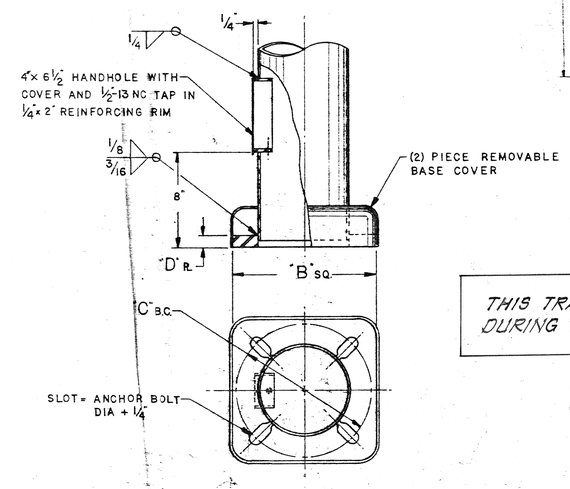

BASE DETAIL

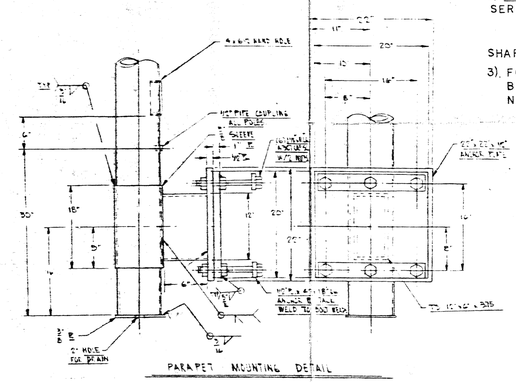

PARAPET MOUNTING DETAIL

NOTES

1) POLE SPECIFICATIONS
   MATERIAL
   SHAFT: STEEL OF 40,000 P.S.I. MINIMUM YIELD AFTER FABRICATION.
   BASE PLATE: ASTM A-36 STEEL.
   PIPE: ASTM A-53 GRADE "B" STEEL.
   WELD: (ALL BUTT WELDS TO BE GROUND FLUSH WITH BASE METAL).
   LONGITUDINAL: BUTT WELD BY THE SUBMERGED ARC PROCESS
   CIRCUMFERENTIAL: BUTT WELD WITH PERMANENT BACK UP RING
   FINISH
   GALVANIZE PER ASTM A-123 OR PRIME PAINT BY DIP PROCESS.
2) CATALOG NUMBERING PROCEDURE
   SERIES — LUM. ARM LENGTH
   A - 308 - 024
   SHAFT LENGTH — DRWG. NUMBER
3) FOR DOUBLE ARM POLES ADD THE LETTER "D" BEHIND THE ARM LENGTH IN THE CATALOG NUMBER. EXAMPLE: A-308 D - 024

APPROVED
2/3/81
for DISTRICT ENGR. - OAHU

THIS TRACING PREPARED DURING "AS BUILT" POSTINGS.

STATE OF HAWAII
DEPARTMENT OF TRANSPORTATION
HIGHWAYS DIVISION

LIGHT POLE CONNECTION DETAILS

INTERSTATE ROUTE H-1
KAPIOLANI INTERCHANGE ON-RAMP
F.A.I. PROJ. NO. I-HI-1(157)-24
Scale: AS NOTED Date: 06-29-80

SHEET No. 54A OF 54 SHEETS

AGENCY	STATE OF HAWAII
PROJECT	KAPIOLANI INTERCHANGE
DISTRIBUTOR	WESTINGHOUSE ELECTRIC SUPPLY
CONTRACTOR	
CUSTOMER ORDER NO.	6501 - 08027-10
AMERON M.F.A. NO.	

MATERIAL LIST

QT'Y.	CATALOG NUMBER AND DESCRIPTION
—	A-306-024 W/ ANCHOR BOLTS
—	A-306-024 W/ PARAPET MOUNT
4	LENGTH OF POLE

SYMBOL	REVISION	DATE	BY	APPV'D.
A	ADDED 26'-6" SHAFT	12-76	G.A.H.	
	REDRAWN	1-76	G.A.H.	

Ameron POLE PRODUCTS DIVISION

"A" SERIES LIGHTING STANDARD

			SCALE:	024
DRAWN.	G.A.H.	1-76		
APPV'D.	S.A.J.	1-76		

108 S-1

4300-4 8/71

FED. ROAD DIST. NO.	STATE	FED. AID PROJ. NO.	FISCAL YEAR	SHEET NO.	TOTAL SHEETS
HAWAII	HAW.	I-H-1(057)24	1979	109	144

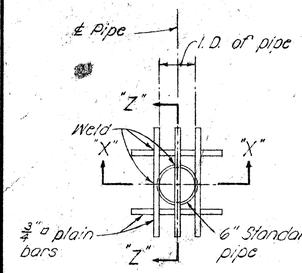

PLAN

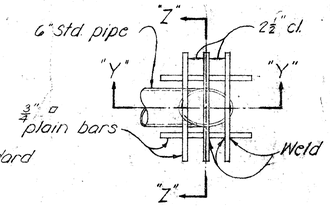

PLAN

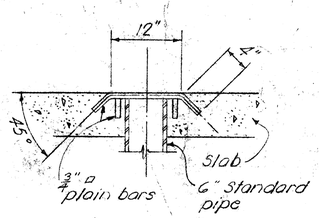

SECTION "Z-Z"

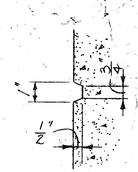

TYPICAL CONCRETE GROOVE DETAIL

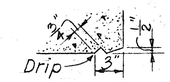

DRIP DETAIL

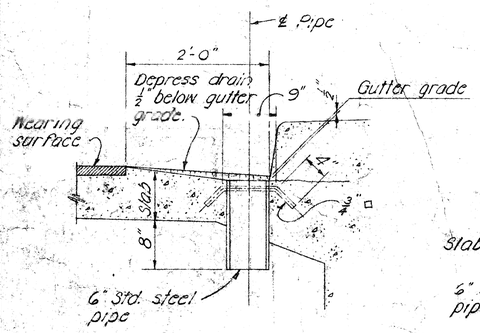

SECTION "X-X"

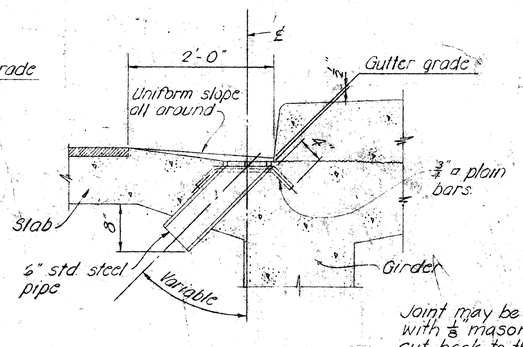

SECTION "Y-Y"

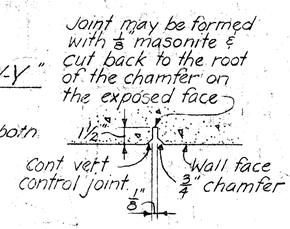

NOTE:

Metal drains shall be considered incidental to Class A Concrete in both concrete and steel bridges and will not be paid for separately.

Assemblage of grillage and pipe shall be hot-dip galvanized after all welding is completed.

TYPICAL DRAINAGE DETAILS

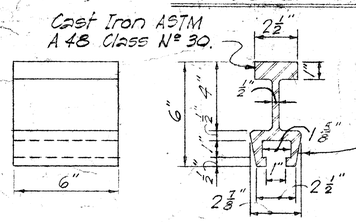

Contractor to take proper precautions to prevent the concrete from flowing into the opening of the inserts.

INSERT DETAIL

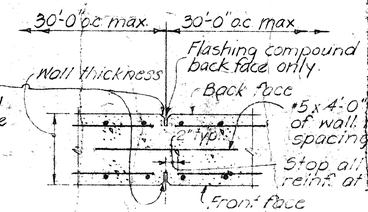

CONTROL JOINT DETAILS

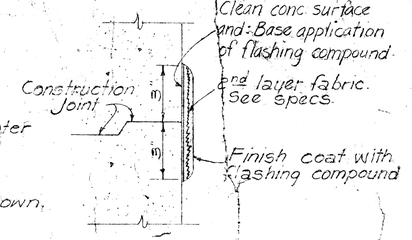

TYP. FLASHING COMPOUND WATERPROOFING DETAIL

GENERAL NOTES

1 - All concrete shall be Class A unless otherwise noted.
2 - Reinforcing shall be detailed in accordance with A.C.I. Manual of Standard Practice for Detailing Reinforced Concrete Highway Structures unless otherwise noted.
3 - Clearance for reinforcing bars shall be as follows, unless otherwise noted:
  a - 1½" For stirrups of beams & pier caps.
  b - 2" For ties of columns.
  c - 2" For formed walls.
  d - 3" For footings.
4 - Minimum spacing between parallel bars shall be 2½ times the diameter of bars, but in no case shall the clear distance between the bars be less than 1½ times the maximum size of the coarse aggregate.
5 - All dimensions relating to reinforcing are to centers of bars unless otherwise noted.
6 - Reinforcing bars shall be securely tied at all intersections & lap splices & shall be held in place during pouring to maintain their proper locations as shown on plans.
7 - Vertical column bars shall be arranged in such a manner as to miss pier cap bars above as directed by the Engineer.
8 - Except as otherwise noted on drawings, all exterior corners & re-entrant angles in concrete work shall be chamfered 3/4" x 3/4".
9 - Concrete seats receiving steel plates, leadplates or neoprene pads shall be poured monolithically with supporting structures & top of concrete seats shall be finished with a steel trowel to a smooth level surface at the elevation shown on the plans.
10 - Elastomeric Pads: Bottom of bridge bearing pads shall be secured against displacement with adhesives approved by the Engineer. Pads shall be incidental to concrete and will not be paid for separately.
11 - Forms for all exposed surfaces of separation structures and surfaces of retaining walls visible from a traveled way or from a populated area shall be plywood except that metal forms may permitted provided a surface finish satisfactory to the Engineer can be obtained and the use of such forms is approved in writing by the Engineer. Forms for round columns shall be made of materials that will give a smooth finish and true dimensions as given in the plans. Forms for prestressed concrete members shall be either metal or plywood.
12 - Gothic letters and figures approximating dimensions shown will be acceptable if approved by the Engineer.
13 - The contractor shall verify the location of all existing utility lines and notify the respective owners before commencing work or excavation or driving of piles.
14 - Standard Detail Drawings refer to all structures in general, except for modifications as may be required for special conditions. For such modifications refer to the corresponding detailed drawings.

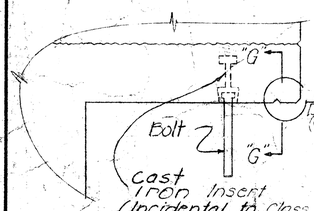

DETAIL of PIPE HANGERS & INSERTS

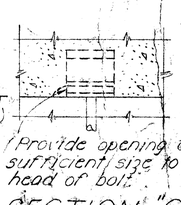

(Provide opening of sufficient size to insert head of bolt)

SECTION "G-G"

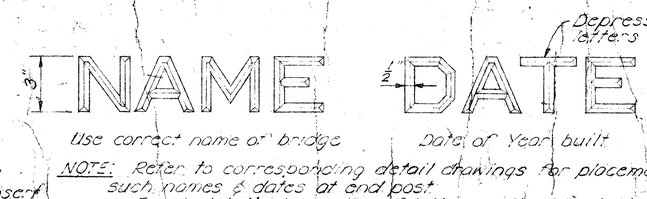

NOTE: Refer to corresponding detail drawings for placement of such names & dates at end post.
Exact details & spacing of letters & figures shall be as directed by the Engineer. See Note #12

TYPICAL DETAIL OF LETTERS & FIGURES AT CONCRETE END POST

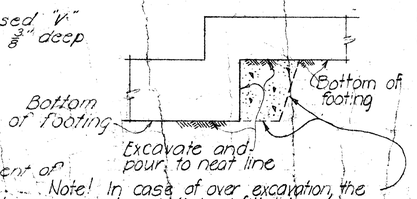

Note: In case of over excavation, the contractor shall backfill this area with minimum class "D" concrete at his own expense.

TYPICAL EXCAVATION FOR CONTINUOUS FOOTING STEP-UP

APPROVAL RECOMMENDED:
Paul T. Yamashita — 1-23-70
BRIDGE DESIGN ENGINEER — DATE

APPROVED
For Paul T. Yamashita — 1-28-70
ASSISTANT CHIEF, ENGINEERING — DATE

NO.	REVISION	APPROVED BY	DATE

STATE OF HAWAII
DEPARTMENT OF TRANSPORTATION
HIGHWAYS DIVISION

STANDARD DETAILS
NOTES AND MISCELLANEOUS DETAILS

Date: October 1969

SHEET No. OF SHEETS DB-100

ORIGINAL PLAN	SURVEY PLOTTED BY	DATE
	DRAWN BY	
	TRACED BY	
NOTE BOOK	DESIGNED BY	
No.	QUANTITIES BY	
	CHECKED BY	

PRINTED ON NO. 1000H CLEARPRINT

FED. ROAD DIST. NO.	STATE	FED. AID PROJ. NO.	FISCAL YEAR	SHEET NO.	TOTAL SHEETS
HAWAII	HAW.	I-HI-1(157)24	1979	110	146

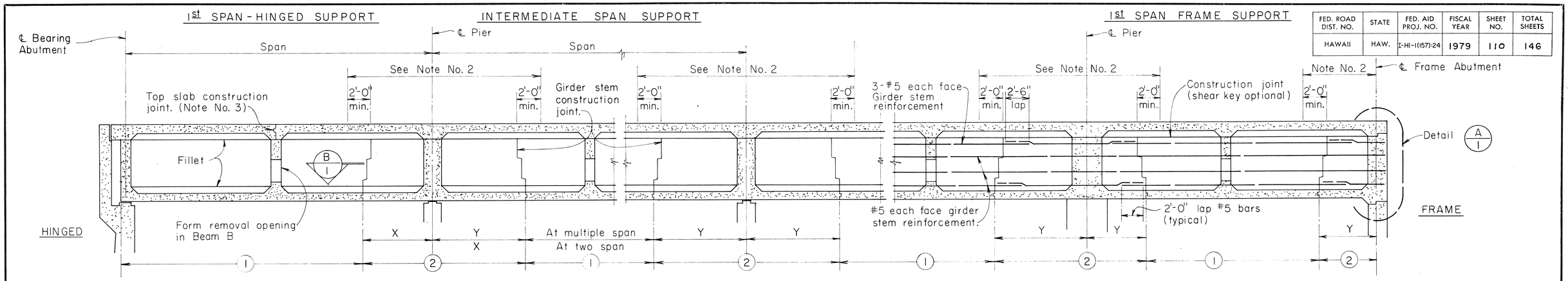

PLACING DIAGRAM

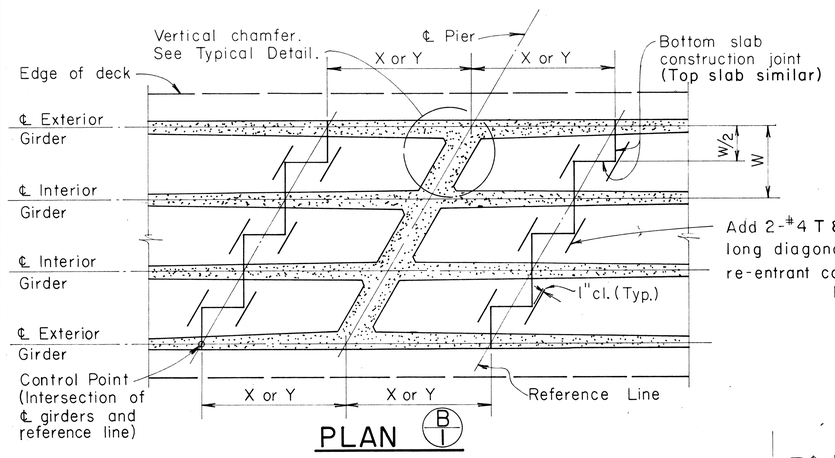

PLAN B/1

CONSTRUCTION JOINT - BRIDGES ON SKEW

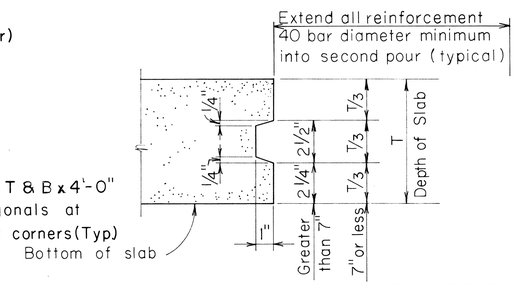

TYPICAL SLAB CONSTRUCTION JOINT DETAIL

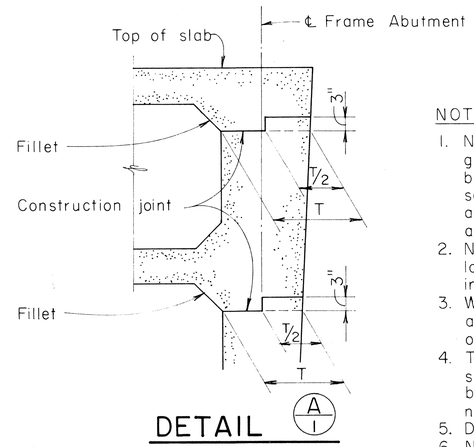

DETAIL A/1

NOTES:

1. Numbers ① and ② indicate sequence of placing bottom slab and girder stem concrete. ② may be placed with ① when approved by the Engineer provided that the ① sections adjoining the ② sections are placed in this pour. For any deviation from the above, the contractor shall submit a diagram to the Engineer for approval.
2. No top slab construction joint or form removal opening shall be located in the region over the piers as noted, nor in the supporting section of a hinged span.
3. When top slab is not poured continuously, and top slab forms are not removed, construction joint in top slab shall be located over an intermediate diaphragm.
4. Top slab concrete shall be placed separately from the stem. Top slab concrete may be placed continuously or in parts as approved by the Engineer, providing pour is not in conflict with the above notes.
5. Dimension X = 1/4 span. Y = 1/5 span.
6. No lapping of main bars shall be permitted at construction joints.
7. If the Contractor elects to leave top slab forms in place, form removal opening shall be omitted and replaced by 3" vent. Vertical shorings left in place for the top slab formwork, shall not be located within the center half of each top slab span.

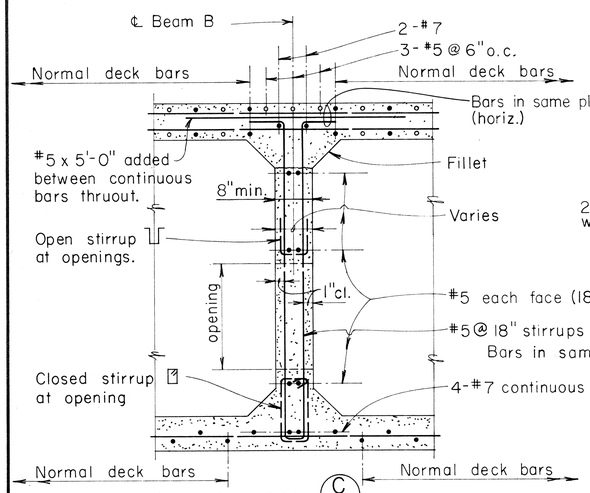

SECTION C/1

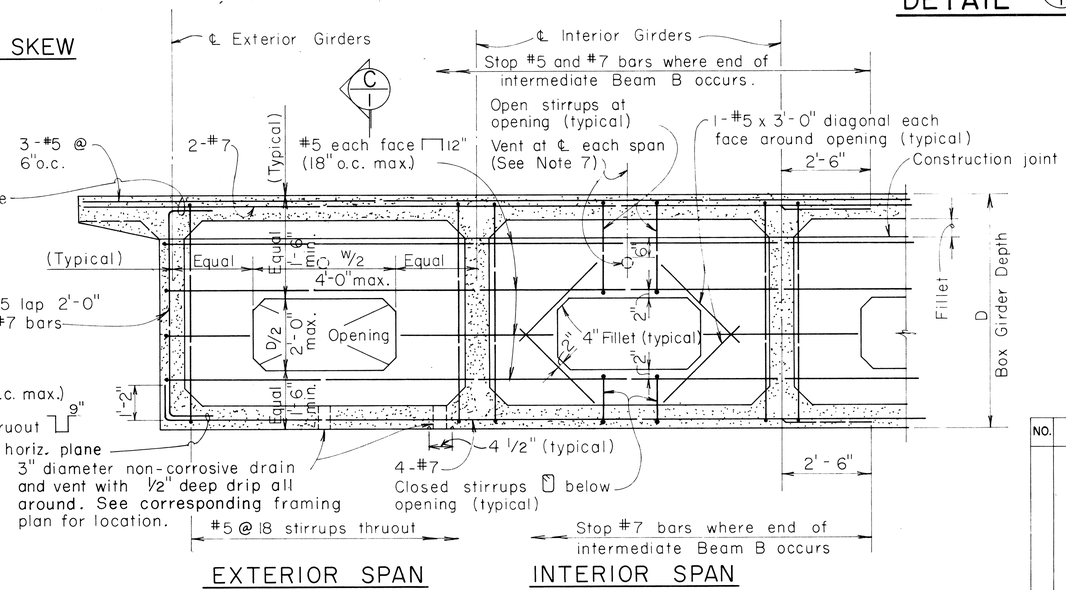

TYPICAL BEAM B DETAILS

APPROVAL RECOMMENDED:

Warren K. Yamamoto — BRIDGE DESIGN ENGINEER — 6-1-76 DATE

APPROVED

Herbert Richards — ASSISTANT CHIEF, ENGINEERING — 6-2-76 DATE

NO.	REVISION	APPROVED BY	DATE

STATE OF HAWAII
DEPARTMENT OF TRANSPORTATION
HIGHWAYS DIVISION

STANDARD DETAILS

CONCRETE BOX GIRDER

Not To Scale — Date: May 1976

SHEET No. 1 OF 3 SHEETS DB-101-1

ORIGINAL PLAN	SURVEY PLOTTED BY	DATE
	DRAWN BY	"
	TRACED BY	"
NOTE BOOK	DESIGNED BY	"
	QUANTITIES BY	"
No.	CHECKED BY	"

FED. ROAD DIST. NO.	STATE	FED. AID PROJ. NO.	FISCAL YEAR	SHEET NO.	TOTAL SHEETS
HAWAII	HAW.	I-HI-1(057)-24	1979	111	146

NOTE:
For additional details, see detailed plans

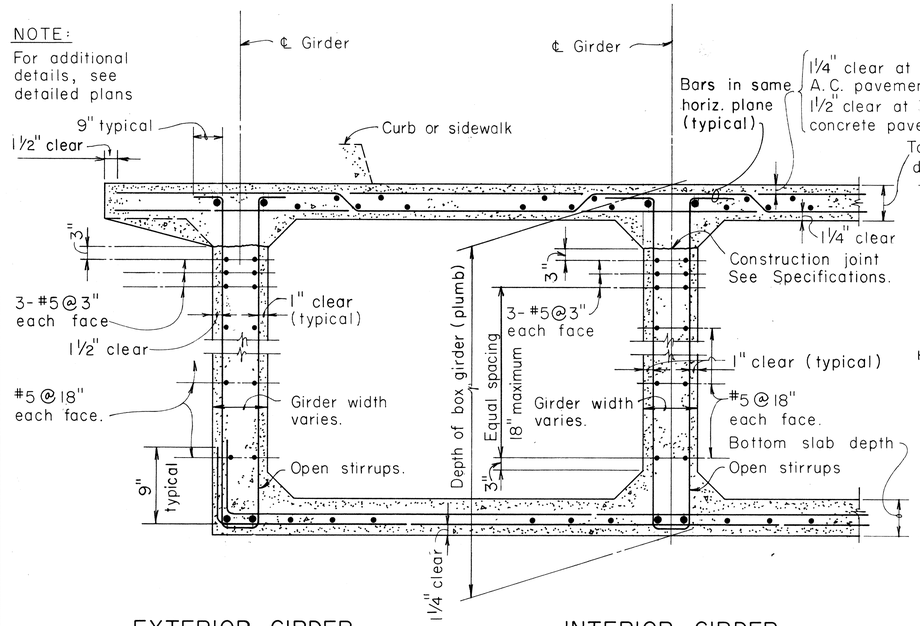

EXTERIOR GIRDER INTERIOR GIRDER

TYPICAL NORMAL BOX GIRDER SECTION

NOTE:
D = Depth of girder stem to bottom of slab.
For additional details see Normal Section of the Plans.

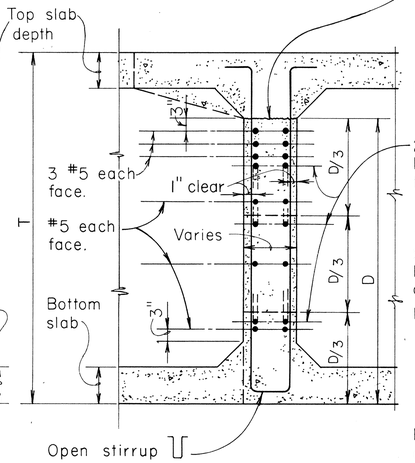

SECTION A/2

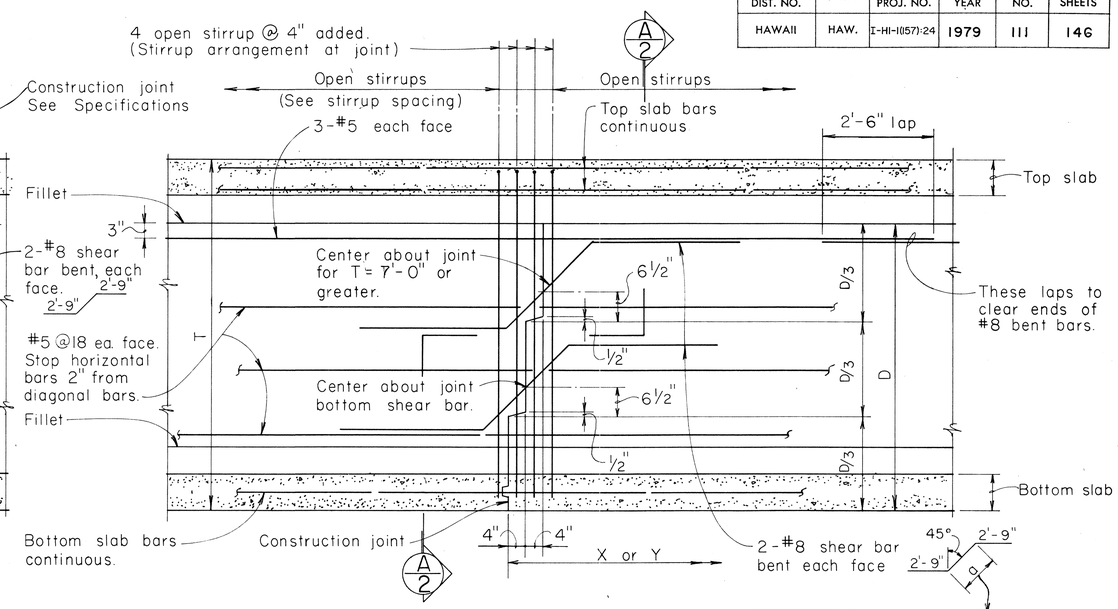

GIRDER STEM CONSTRUCTION JOINT

Depth T	a
4'-11" and smaller	1'-9"
5'-0" to 5'-11"	2'-0"
6'-0" to 6'-11"	2'-3"
7'-0" and greater	3'-0"

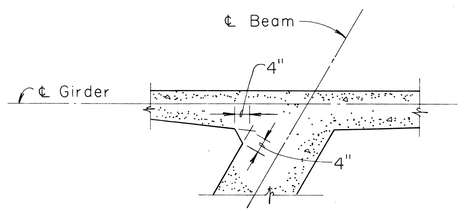

TYPICAL DETAIL OF VERTICAL CHAMFER AT ACUTE INTERSECTION OF SKEWED CONCRETE MEMBER

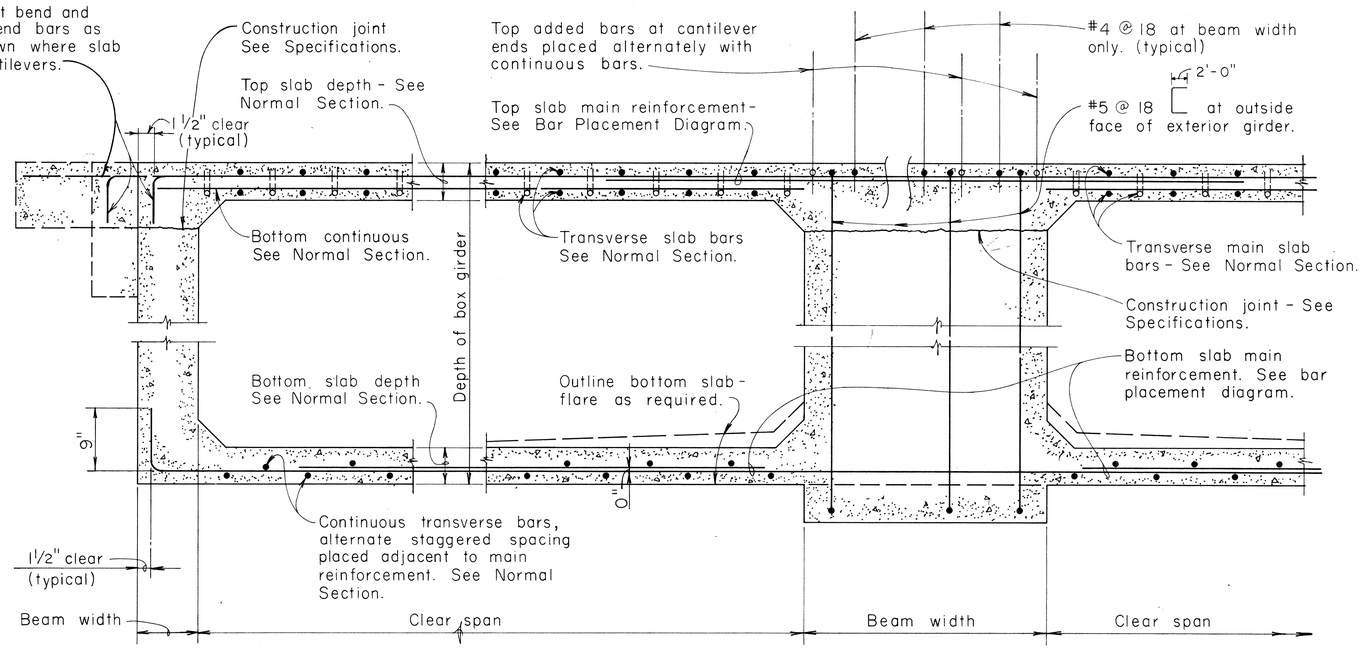

AT NON-CONTINUOUS END AT CONTINUOUS SUPPORT

TYPICAL LONGITUDINAL DECK SECTION ALONG GIRDER AT NORMAL OR RADIAL SUPPORTS

ORIGINAL PLAN	SURVEY PLOTTED BY	DATE
	DRAWN BY	
	TRACED BY	
NOTE BOOK	DESIGNED BY	
	QUANTITIES BY	
No.	CHECKED BY	

APPROVAL RECOMMENDED:
Clarence K. Yamamoto — BRIDGE DESIGN ENGINEER — 6-1-76 DATE

APPROVED
Herbert Takeishi — ASSISTANT CHIEF, ENGINEERING — 6-2-76 DATE

NO.	REVISION	APPROVED BY	DATE

STATE OF HAWAII
DEPARTMENT OF TRANSPORTATION
HIGHWAYS DIVISION

STANDARD DETAILS

CONCRETE BOX GIRDER

Not To Scale Date: May 1976

SHEET No. 2 OF 3 SHEETS DB-101-2

FED. ROAD DIST. NO.	STATE	FED. AID PROJ. NO.	FISCAL YEAR	SHEET NO.	TOTAL SHEETS
HAWAII	HAW.	I-HI-1(157)-24	1979	112	146

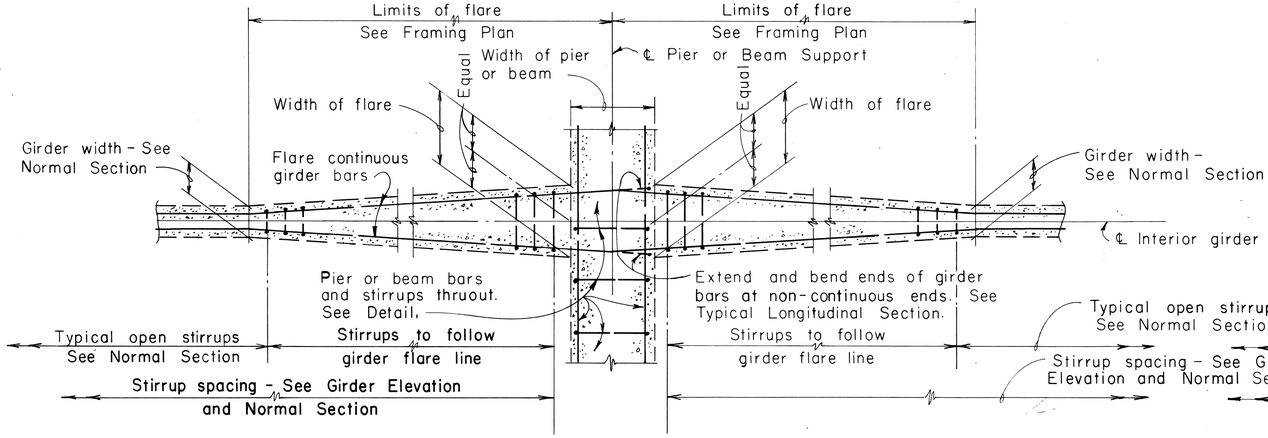

INTERIOR GIRDER

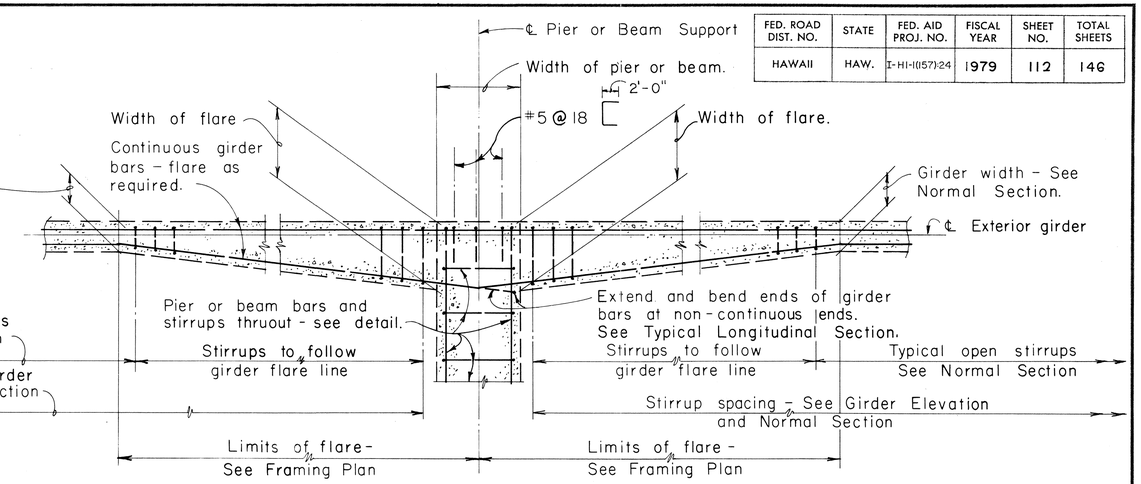

EXTERIOR GIRDER

TYPICAL DETAILS OF GIRDER FLARE AT NORMAL OR RADIAL SUPPORTS - CONTINUOUS ENDS AS SHOWN
(NON-CONTINUOUS ENDS SIMILAR EXCEPT AS OTHERWISE NOTED)

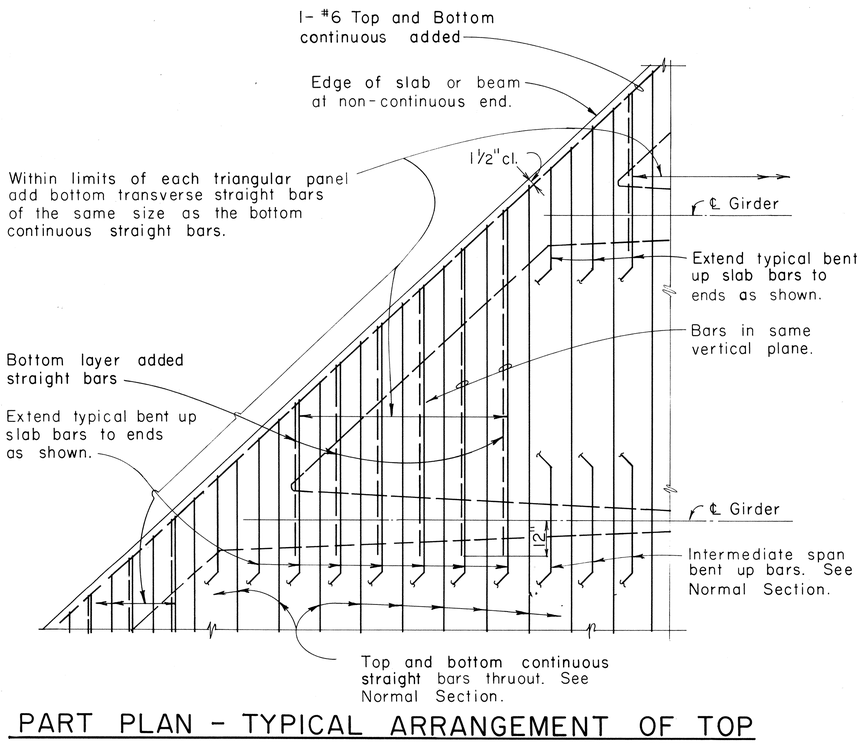

PART PLAN - TYPICAL ARRANGEMENT OF TOP SLAB REINFORCEMENT AT SKEWED ENDS

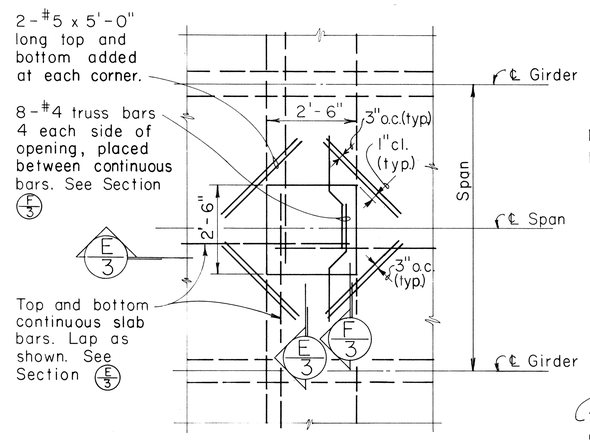

NOTES

1. Final location of opening shall be determined by the Engineer.
2. Form removal opening at top slab shall not be located where main girder bars occur.
3. Form removal opening may extend from edge of deck.

PART PLAN - DECK SHOWING FORM REMOVAL OPENING

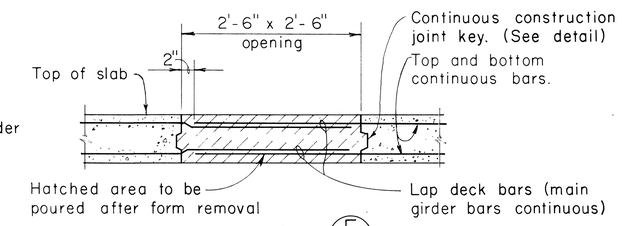

SECTION E/3

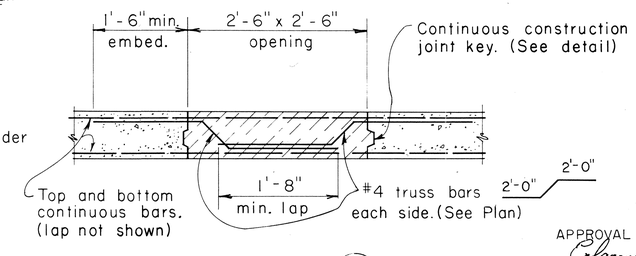

SECTION F/3

APPROVAL RECOMMENDED
BRIDGE DESIGN ENGINEER — DATE 6-1-76

APPROVED
ASSISTANT CHIEF, ENGINEERING — DATE 6-2-76

NO.	REVISION	APPROVED BY	DATE

STATE OF HAWAII
DEPARTMENT OF TRANSPORTATION
HIGHWAYS DIVISION

STANDARD DETAILS
CONCRETE BOX GIRDER

Not To Scale: Date: May 1976

SHEET No. 3 OF 3 SHEETS DB-101-3

ORIGINAL PLAN	SURVEY PLOTTED BY	DATE
	DRAWN BY	"
	TRACED BY	"
NOTE BOOK	DESIGNED BY	"
	QUANTITIES BY	"
No.	CHECKED BY	"

DATE	REVISION
6/6/80	Expanded note on wire strands for "Type I" pile, per Addendum No. 1.

FED. ROAD DIST. NO.	STATE	FED. AID PROJ. NO.	FISCAL YEAR	SHEET NO.	TOTAL SHEETS
HAWAII	HAW.	BRH-(87)-24	1979	113	146

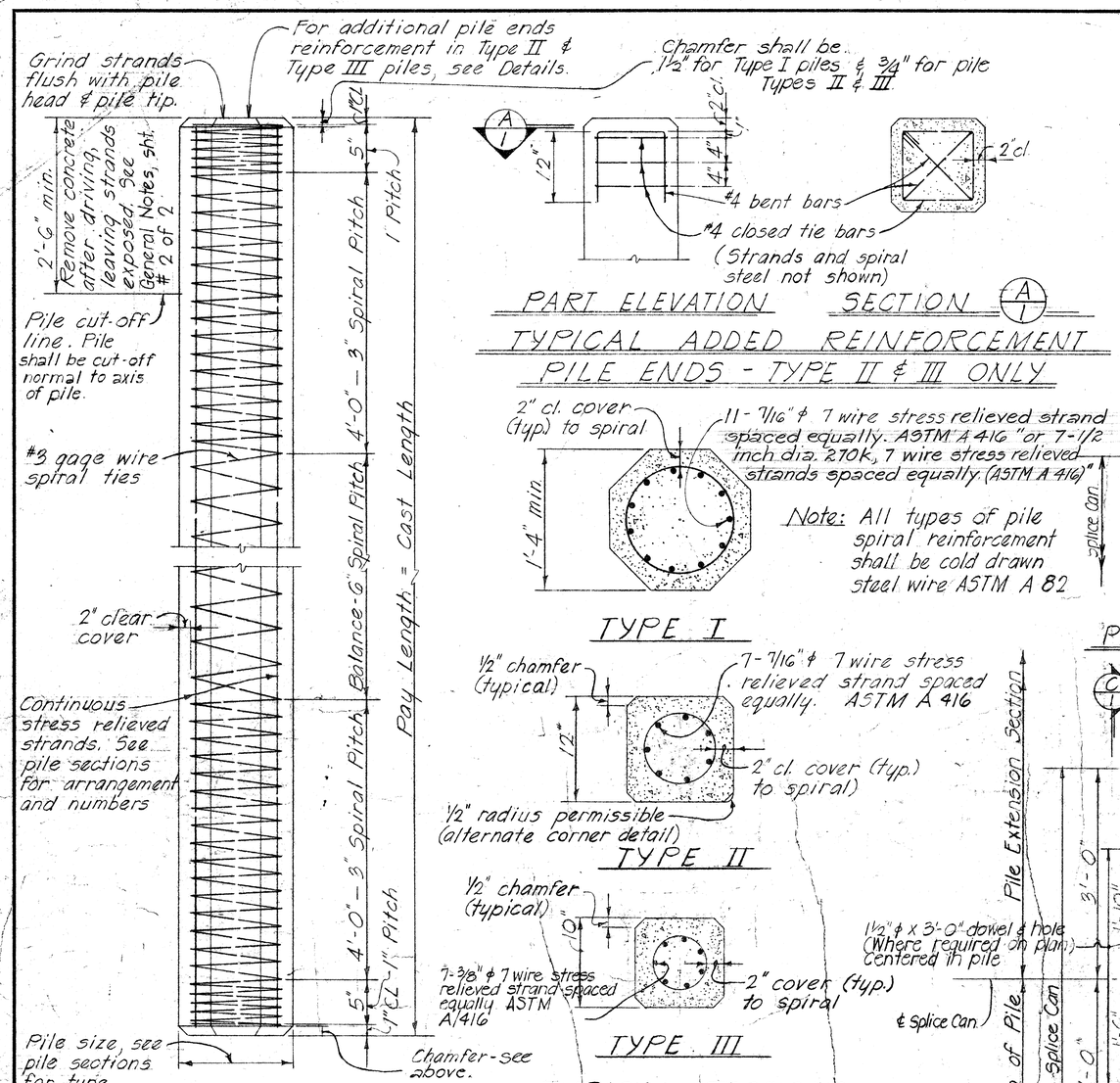

NOTE:
Concrete in pile build-ups without driving shall be Class A Concrete. Concrete in pile build-ups with driving shall have a minimum compressive cylinder strength f'c of 5000 p.s.i. at 28 days. Build-ups may be driven if the specimen of concrete from which the piles were poured develops a strength of at least 3500 p.s.i. but not earlier than 7 days.

Note: All types of pile spiral reinforcement shall be cold drawn steel wire ASTM A 82

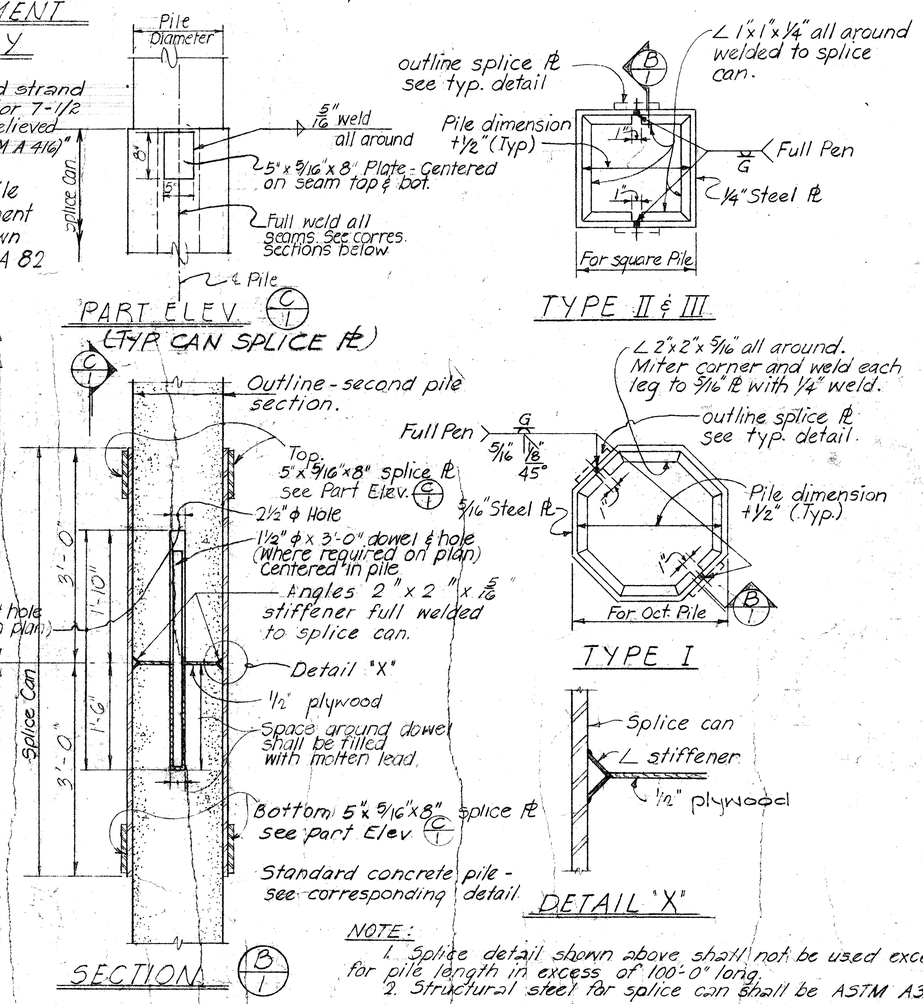

NOTE:
1. Splice detail shown above shall not be used except for pile length in excess of 100'-0" long.
2. Structural steel for splice can shall be ASTM A36.

TYPICAL PILE SPLICE DETAILS
(FOR PRESTRESSED CONCRETE PILES WHEN CAST IN TWO OR MORE SECTIONS)

NOTE: All welding shall conform to the Specifications for "Welded Highway and Railway Bridges" of the American Welding Society.

Max. Length "L"*	Max. Length "L"*	Length "L"*
Type I "L" = 53'-0"	Type I "L" = 75'-0"	Type I "L" over 75'-0"
12" Type II "L" = 50'-0"	12" Type II "L" = 72'-0"	12" Type II "L" over 72'-0"
10" Type III "L" = 46'-0"	10" Type III "L" = 66'-0"	10" Type III "L" over 66'-0"
0.30L 0.70 L	0.21L 0.58L 0.21L	0.15L 0.35 L 0.35 L 0.15L

* The length "L" is the distance end to end of pile.

1 POINT PICK-UP 2 POINT PICK-UP 3 POINT PICK-UP

NOTE: Unless special lifting devices are attached for pick-up points, pick-up points shall be plainly marked on all piles after removal of the forms and all lifting shall be done at these points.
The use of special embedded or attached lifting devices, the employment of other pick-up points or any other method of pick-up shall be subject to approval by the Engineer.

NO.	REVISION	APPROVED BY	DATE

APPROVAL RECOMMENDED: Paul T. Yamashita — BRIDGE DESIGN ENGINEER — DATE 1-23-79

APPROVED: Paul T. Yamashita — For ASSISTANT CHIEF, ENGINEERING — DATE 1-28-79

STATE OF HAWAII
DEPARTMENT OF TRANSPORTATION
HIGHWAYS DIVISION

STANDARD DETAILS
PRESTRESSED CONCRETE PILES

Date

SHEET No. 1 OF 2 SHEETS DB-300-1

113R

ORIGINAL PLAN | SURVEY PLOTTED BY | DRAWN BY | TRACED BY | DESIGNED BY | QUANTITIES BY | CHECKED BY | DATE | NOTE BOOK

PRINTED ON NO. 1000H CLEARPRINT

FED. ROAD DIST. NO.	STATE	FED. AID PROJ. NO.	FISCAL YEAR	SHEET NO.	TOTAL SHEETS
HAWAII	HAW.	I-HI-I(157)-24	1979	114	146

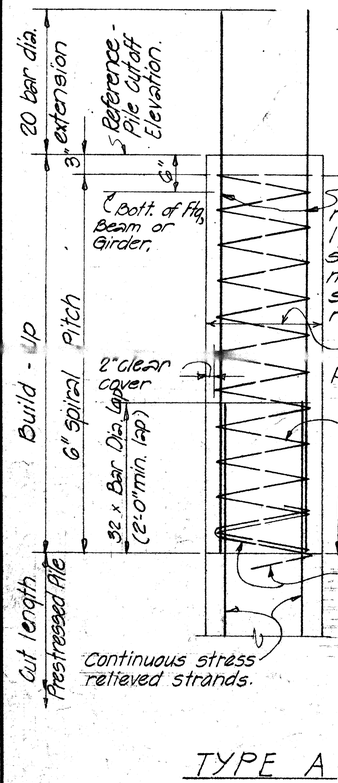

The minimum area of reinforcing steel shall be 1½ % of the gross cross-section of concrete. Placement of bars shall be in a symmetrical pattern of not less than four bars.

Built-up section same as prestress pile below.

#3 gage wire spiral ties

Concrete around top edge of pile shall be bushhammered to prevent feather edges.

Clean and extend existing spiral a minimum of one turn into build-up above and lap with spiral tie.

TYPE A

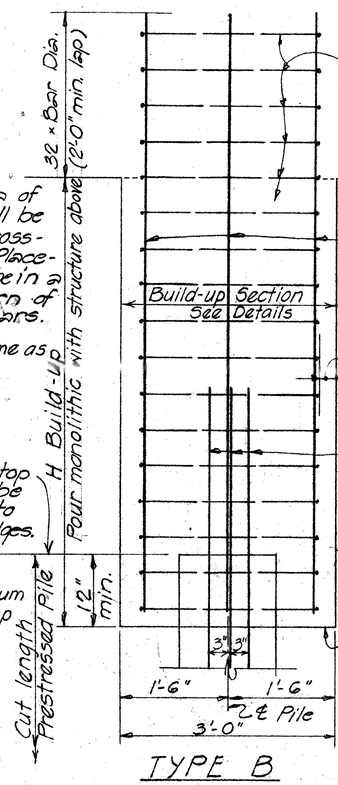

TYPE B

Notes:

Selection of pile build-up type without driving to be determined by the Engineer.

When height of depressed portion of footing (H) exceeds 4", the depressed section shall be poured separately from the main body of the footing.

Depressed portion of footing may be omitted for pile heads embedded at least 4" into footing provided at least 90% of the piles in each footing have the minimum embedment into footing as shown in contract plans.

WITHOUT DRIVING
TYPICAL PILE BUILD-UP DETAILS

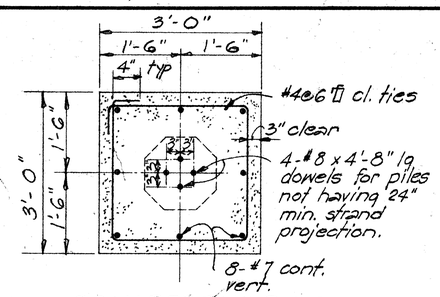

SQUARE BUILD-UP

Note:

Circular section may be used instead of square section if approved by the Engineer.

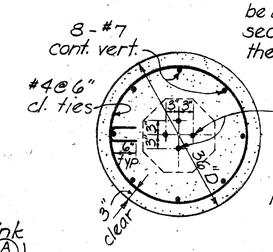

CIRCULAR BUILD-UP SECTION A/2

GENERAL NOTES

1. Work of cutting off prestressed conc. piles or concrete build-ups shall be performed in such a manner as to avoid spalling or damaging the pile below cut-off. In case of such damage, the pile shall be replaced or repaired by the Contractor at his expense as directed by the Engineer.

2. Portion of pile embedded into footing shall be of sound concrete. Damaged portions shall be removed and pile cut-off elevation lowered as required by the Engineer.

2'-6" min. unless otherwise directed by the Engineer. Remove concrete after driving, leaving reinf. exposed

Chamfer - See Typical Pile Detail.

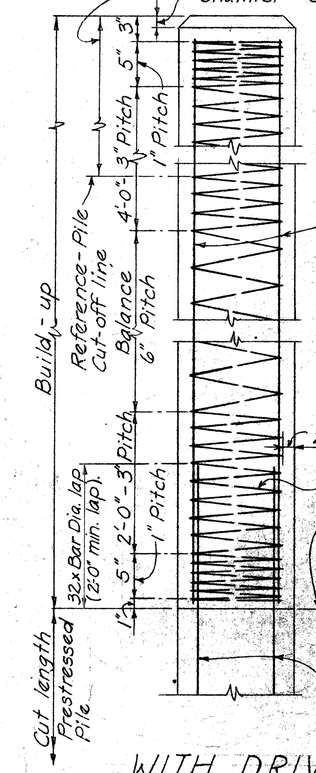

The minimum area of reinforcing steel shall be 1½ % of the gross cross-section of concrete. Placement of bars shall be in a symmetrical pattern of not less than four bars.

2" clear cover

#3 gage wire spiral ties

Concrete around top edge of pile shall be bushhammered to prevent feather edges. Clean and extend existing spiral a minimum of one turn into Build-Up above and lap with spiral tie.

Continuous stress relieved strands.

WITH DRIVING
TYPICAL PILE BUILD-UP DETAIL

APPROVAL RECOMMENDED: Paul T. Yamashita — BRIDGE DESIGN ENGINEER — 1-23-70 DATE

APPROVED: Paul T. Yamashita — For ASSISTANT CHIEF, ENGINEERING — 1-28-70 DATE

NO.	REVISION	APPROVED BY	DATE

STATE OF HAWAII
DEPARTMENT OF TRANSPORTATION
HIGHWAYS DIVISION

STANDARD DETAILS

PRESTRESSED CONCRETE PILES

Date: Oct. 1968

SHEET No. 2 OF 2 SHEETS DB-300-2

ORIGINAL PLAN	SURVEY PLOTTED BY	DATE
	DRAWN BY	
	TRACED BY	
NOTE BOOK	DESIGNED BY	
	QUANTITIES BY	
No.	CHECKED BY	

PRINTED ON NO. 1000H CLEARPRINT

STATE OF HAWAII
DEPARTMENT OF TRANSPORTATION
HIGHWAYS DIVISION
HONOLULU, HAWAII

INTERSTATE ROUTE H-1

KAPIOLANI INTERCHANGE ON-RAMP
SECTION I REPAIRS

FEDERAL AID INTERSTATE PROJECT NO. I-HI-1 (157): 24

DISTRICT OF HONOLULU
ISLAND OF OAHU

DRAWING LIST

QUANTITY SCHEDULE

TYPE	REFERENCE	NOTE	NUMBER	WEIGHT
HOOKED DOWELS				
# 5 EMBEDDED	DETAIL 2/SR-9		1678	3230#
# 5 EMBEDDED	DETAIL 2A/SR-9		139	490
# 6 EMBEDDED	DETAIL 4/SR-9		408	1400
# 5 THREADED	DETAIL 5/SR-9		319	850
# 5 THREADED	DETAIL 7/SR-9	@ NORTH WEB ONLY	401	900
# 6 THREADED	DETAIL 1/SR-9		935	3550
# 6 THREADED	DETAIL 3/SR-9	@ NORTH WEB ONLY	513	1760
STIRRUPS				
# 5 HOOKED TOP & BOT.		@ SOUTH WEB ONLY	49	470
# 5 HOOKED @ BOT. ONLY		@ SOUTH WEB ONLY	70	720
# 5 HOOKED @ TOP ONLY		CENTER & NORTH WEBS	70	645
# 5 STRAIGHT		CENTER & NORTH WEBS	120	1140
# 6 HOOKED, TOP & BOT.		@ SOUTH WEB ONLY	194	2620
# 6 HOOKED @ BOT. ONLY		@ SOUTH WEB ONLY	293	4240
# 6 HOOKED @ TOP ONLY		CENTER & NORTH WEBS	410	4910
# 6 STRAIGHT		CENTER & NORTH WEBS	578	7450
DOWELS				
# 5 × 3'-0"	DETAIL 3/SR-10	@ PIERS & BEAMS	32	101
# 5 × 6'-0"	DETAIL 4/SR 10	@ DIAPHRAGMS	20	126
# 4 × 3'-0"	DETAIL 3/SR 10	@ PIERS & BEAMS	80	161
# 4 × 6'-0"	DETAIL 4/SR 10	@ DIAPHRAGMS	50	201
HORIZONTAL WEB REINFORCING				
# 4 CONT.				9480
# 5 CONT.				5490
REINFORCING AT ADDED TENDON BLISTERS				
# 5 TIES	SECTIONS A & B/SR-11			1230
# 8 DOWELS	SECTIONS C & D/SR-11			1010
SPLICE BARS				
# 5	SECTION A/SR-5			450

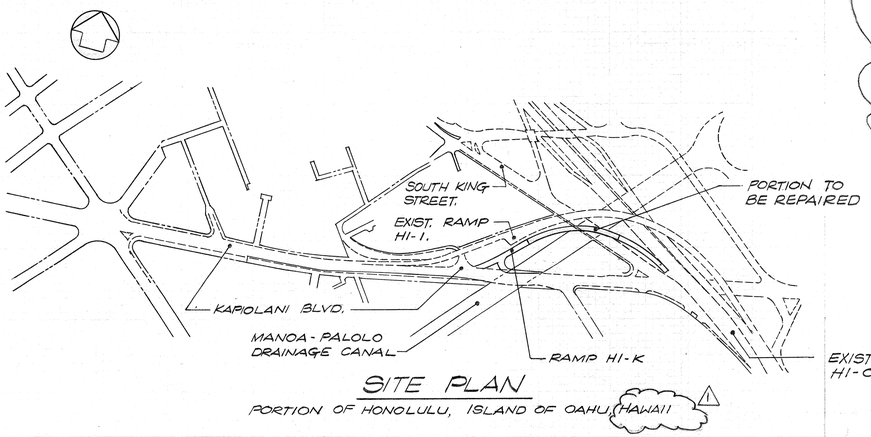

SITE PLAN
PORTION OF HONOLULU, ISLAND OF OAHU, HAWAII

△1

REPAIR WORK

1.0. Access Openings (SR-10)

1.1. Provide temporary openings in the Deck Slab for workmen and materials. Openings to be 4'-6" x 2'-6" centered between webs. Edge to have 1" deep saw cut surface at top. Leave 4" extensions of deck rebar at edge to allow weld splicing for repair. (Detail 1/SR-10)

1.1.1. Repair openings after post-tensionings. Replace all rebar by weld splicing new rebar of the same size to the 4" extensions. Epoxy bond existing to new concrete. See specifications Section 9.3.5.

1.2. Provide permanent openings in the cells for both diaphragms. Center between webs. Finished opening 3'-0"x4'-0" with 4" corner chamfers, 18" clear of Bottom Slab. Initial openings 4'-0"x5'-0" to allow hooking existing bars and additions of new rebar. Out-set top for concrete placement. (Detail 2/SR-10 and Section A/SR-10)

2.0. Selective Demolition (SR-3)

2.1. Remove existing deck soffit forms. Reuse for repair forms.

2.2. Remove Unsound Concrete.

2.2.1. Remove spalled concrete still in place on webs.

2.2.2. Remove highly fractured concrete at base of webs.

2.2.3. Remove minor amounts of unsound concrete in various locations on webs.

2.3. Remove exposed web reinf. at the South face of the webs in the spalled areas on the South Web. Cut off exposed rebar 3" from sound embedment. (Section A/SR-5)

2.4. Remove damaged duct in spalled areas on the South Web. Remove concrete to expose sound embedded duct to provide an exposed length for coupling. Coordinate length with P.T. system supplier.

3.0. Concrete Pour and Vent Holes (SR-5)

3.0.1. Provide holes through the deck for concrete placement and vibrator access. These holes also provide space for the embedment and epoxy bonding of stirrup bars. Determine and mark the location of existing top rebar on the deck surface before cutting holes. Vary hole locations slightly to avoid cutting rebar. (Detail 1/SR-5)

3.1. Pour holes are 45" o.c. Use 4" diameter cores and pneumatic tools. The basic type is 5"x12" (South Web) or 4"x12" (North and Center Web) thickness of the concrete. Centered on one exposed deck rebar, and containing 2 stirrup bars.

3.2. Vent holes are 45" o.c., spaced between pour holes, and contain one stirrup bar each. Use 3" diameter core holes. Vent holes must be at least 12" clear from pour holes.

3.3. Provide an additional vent hole, without stirrup bar, adjacent to the surfaces of end forms and diaphragms where a standard spaced pour or vent hole is further than 12" from that surface.

4.0. Prestress Tendons (SR-4) (SR-11)

4.0.1. Provide materials, tensioning and grouting to complete the work to meet original and repair requirements, and be compatible with the existing conditions. Each web contains 6 tendons, each with a capacity of 31 strands (1/2" ø 270K). Tendons materials are 4-1/2" diameter duct, bearing plates, wedge plates, wedges, strand, miscellaneous attachments, and grout. Those tendons having been detensioned shall be removed. New strands (1/2" ø 270K) must be supplied. Use 31 strands in each tendon. Bearing plates are undamaged and are to be reused in place. New duct is to be supplied to replace the damaged duct in spalled areas of South Web. Tendons must be grouted.

4.0.2. Check permanent ducts for damage and blockages before beginning repair, and before and after new concrete placement. Perform check by passing a mandrel, not less than 3-1/2" diameter, through the duct. Correct any damaged or blocked duct before proceeding further with the work.

4.1. Existing duct in sound concrete is to remain in place.

4.2. Provide new 4-1/2" galvanized duct in spalled areas to replace the damaged duct. Couple the new duct to existing embedded duct. The paths of new ducts shall match existing profile.

4.2.1. Remove existing concrete from around new ducts to provide clearances for the concrete pour. Minimum clearances between duct and existing surface to be 1" horizontally, 1-1/2" vertically. At coupling locations, the minimum clearances are 2" horizontally, 3" vertically. (Section A/SR-5)

4.2.2. Provide inspection holes through web where new ducts have less than 1-1/2" clear between them in the South Web. Use 1" diameter drill holes at the top, and bottom of pattern 12" o.c. along web. (Section A/SR-5)

4.2.2.1. Inspect holes during concrete pour. Plug flowing holes until concrete set, then remove plug and dry pack. If no flowing occurs inject grout to fill void after the pour.

4.3. After the new concrete is placed, pull in new strand and prepare for tensioning.

4.4. Tension the tendons in the required sequence when the field cured concrete test cylinders have a tested strength of 4000 psi.

4.5 After the field tensioning records have been approved by the Engineer and State, remove the excessive strand extensions and grout the duct.

4.6. For longitudinal additional tendons (3-12-1/2" ø strand tendons). (SR-11)

4.6.1. Chip off the deck slab at the vicinity of the proposed new anchorage block. Drill holes to seat reinforcing as called out on the drawings. (Sect. A/SR-11) (Sect. B/SR-11)

4.6.2. Epoxy grout reinforcing in pre-drilled holes and install stirrup tie reinforcing after placement of anchorage assembly at both ends of the tendon.

4.6.3. Provide rigid steel pipe at front end of the anchorage trumpet, securing the joint with steel sleeve. The rigid steel pipe will be joined with plastic P.E. sheath with plastic sleeve and watertight joint sealer at the joinery. The P.E. pipe shall be rated to withstand 150 psi for 1-1/2 hours. Contractor shall submit related material and connection details for State approval. (SR-11)

5.0. Roughen Surfaces (SR-3, 6, 7, 8)

5.1. Roughen all existing concrete surfaces which will contact new concrete. Use pneumatic, or sand blast and pneumatic tools. Remove all surface paste, expose aggregate, provide roughness equal to 1/8" undulation in any 2" distance. A groove of 1/4" depth in any 6" distance will be considered equivalent for roughness.

6.0. Keys (SR-3) (SR-10)

6.1. Provide continuous keys in the Bottom Slab and Sides of Diaphragms, Peris and Expansion Joint Beams, at North and Center Webs, 1" deep x 4" wide, with a 3/4" deep saw cut edge.

7.0. Rebar (SR-4 through SR-11)

7.1. Stirrups: #5 and #6, 1-1/2" clear from new South face, 1" clear for North and Center Web. Embedment of some bars in the concrete pour and vent holes is required. Uniform spacings shown on the drawings are nominal only and are to be used as an equivalency criteria, in place spacings may be between 6" minimum, 12" maximum. Embedment of bars in the Bottom Slab at the North and Center Webs is required, as well as in pour and vent holes.

7.1.1. Two stirrup bars are embedded a minimum of 6" in each Pour Hole, and one in each Vent Hole. The top 6" of bar is to be epoxy bonded. Use tape to protect the area during initial stage of concrete pour. When pour reaches the bottom of the Deck remove tape and coat surface with epoxy, then complete the pour to the top of the Deck.

7.1.2. Stirrup bars are embedded in Bottom Slab at the North and Center webs in 4" deep epoxy grouted drill holes in the key. (Detail 6/SR-9)

7.1.3. All stirrup bar ends not embedded in Deck are to have 90° degree hooks 3" long.

7.2. Dowels in Webs: All hooked 90° degrees one end, 1-1/2" clear from new South face, 1" from new North and Center Web face; other end is embedded in existing web in epoxy grouted drill holes. Drill the holes with a rotary-impact drill. Layout locations in advance to insure no conflicts with prestress ducts or other rebar. (SR-4)

7.2.1. Standard arrangement is in stacks of 4 dowels. Stacks are 18" o.c. along webs. (SR-4) Align vertical locations with those of dowels in adjacent stacks as much as possible to allow mutual use of horizontal bars inside the dowel hooks. Locate dowels not closer than 12" to Deck Slab, 6" in Bottom Slab. Do not locate dowels directly beneath centers of Concrete Pour or Vent Holes.

△2

7.2.1.1. First dowel adjacent to duct either top or bottom to be #6 bar, the dowels between duct groups to be #6 bar for exposed ducts and #5 for the rest of the webs. Add dowels at 36" c. along lines adjacent to ducts. All (SR-4) #6 and #5 dowels adjacent to ducts are in 1-1/4" and 1" diameter holes respectively drilled through the concrete. Each dowel is threaded 4" and has a nut, washer and bearing plate attached at the North face of the web. The dowels in the web flare area will have an embedment length of 12". On the North Web bearing plate is inserted in a 1-1/2" deep pocket. Epoxy grout all drill holes and bearing plates. Epoxy coat all steel surfaces of the bearing plate assembly after installation. Epoxy coat pocket surfaces on the North Web, and dry pack the pockets. (North and Center Web: SR-7 and SR-8, South Web: SR-5 and SR-6.)

7.2.1.2. At flare area of South Web the dowels adjacent to the ducts are only the #6's at the stack line, and are in 12" deep, 1-1/4" diameter drill holes, epoxy grouted. (Detail 4/SR-9)

7.2.1.3 Remainder of dowels in the stack are #5 bars, embedded in 1" diameter 9" deep drill holes, epoxy grouted. (Detail 2/SR-9)

7.2.2. Provide #5 or #6 stirrups in 1" and 1-1/4" diameter respectively 9" deep (into sound concrete) drill holes, epoxy grouted, through the South Web into the Bottom Slab at 4" from the soffit. Nominal spacing is 9" o.c. along the South Web. (Detail 2/SR-5)

7.3. Horizontal bars in the web repairs: Lap to straight dowels embedded in diaphragms piers and beams at Center and North Webs. Lap 2'-0" at South Web. Hook 90° at formed ends of web repairs at South Web. (3/SR-10, 4/SR-10)

7.4. Provide straight bars, #4, 5 and 6, for Access Opening repair, miscellaneous placements and support bars. Field cut, bend and weld splice as necessary. (Detail 1/SR-10)

7.5. Field bending and Welding. (Weld Table-Detail 5/SR-10)

7.5.1. Welders must be prequalified per AWS D1.4.

7.5.2. Hot bending may be used if approved by the State.

8.0. Other Items

8.1. Provide forming and concrete for the repairs as required in the specifications.

8.2. Provide epoxy injection bonding of the cracks in the webs as stated in the specifications. Coordinate with the State.

9.0. Suggested Sequence for Coordination of Work

9.1. Cut out the deck access openings (1.0.). Perform the selective demolition (2.0.). Check the ducts for obstruction (4.0.2.). Cut out diaphragm access openings. (Detail 2/SR-10)

9.2. Locate and mark on the deck surface the position of the existing top rebar in the pour and vent hole areas, then cut out the openings (3.0.).

9.3. Locate and mark the extent of the duct on the existing web surfaces, for both embedded and new patterns (4.2.1., 4.2.2.). Cut the concrete to provide duct clearances (4.2.1.) and openings (1.0.).

9.4. Use a string line from the pour and vent holes to mark the location of new embedded stirrup bars on the web surface (7.1., 7.1.1., 7.1.2.). Mark out and drill holes for the stirrup bars in the Bottom Slab at the North and Center Webs (7.1.2.).

9.5. Mark the intended location of web dowels on the web surface (7.2.). Check for patterning clearances, and for no interference with stirrups. Drill the dowel holes. Make the bearing plate pockets in the North Web. Place the web dowels in their holes and check that the cover and hole depth requirements are met.

9.6. Mark the intended location of the horizontal bar diaphragm dowels (7.3.). Check to insure no interference with web dowels or stirrups. Drill the dowel holes.

9.7. Epoxy grout the diaphragm dowels, then the web dowels and their bearing plates.

9.8. Drill the inspection holes in the web (4.2.2.). Place the new tendon ducts (4.2.). Weld splices of new reinforcing to existing extensions where web reinforcing has been cut and removed (2.3.). Inspect epoxy grouted dowels.

9.9. Loose place the horizontal bars for the webs (7.3.). Epoxy grout the stirrup bars into the bottom slab. Tie-in the horizontal bars.

9.10. Check the placements, complete unfinished work, and close the web forms.

9.11. Check the ducts for obstructions (4.0.2.). Wet the existing concrete surface in the repair area for 24 hours prior to the concrete pour.

9.12. Place concrete for webs and epoxy bond stirrups (7.1.1.). Make test cylinders. Check the inspection holes on the webs (4.2.2.1.). Start the cure.

9.13. Complete prestress work (4.3., 4.4., 4.5.) and any other remaining work.

9.14. Weld splice new rebar in the deck access openings (1.1.1.).

9.15. Close deck access openings with 5000 psi concrete, texture and cure.

△1

Y. C. YANG REGISTERED PROFESSIONAL ENGINEER No. 2170 HAWAII, U.S.A.

C.O. 114 S-1

NO.	REVISION	DATE
△2	LOCATION OF DOWELS - FROM 8" TO 6" IN BOTTOM SLAB	7-23-82
△1		7-2-82

DESIGN ____ DRAWN B. BANSUELO CHECKED ____ PROJECT Nº ____

T.Y. LIN INTERNATIONAL
STRUCTURAL ENGINEERING
315 Bay St., San Francisco, Ca. 94133. Tel. (415) 982-1050

Issued For	Date	By

SHEET TITLE: GENERAL NOTES

PROJECT: KAPIOLANI INTERCHANGE ON-RAMP REPAIRS
F.A.I. PROJECT NO. I-HI-1 (157): 24

SHEET Nº SR-1
SHEET 1 OF 12 SHEETS

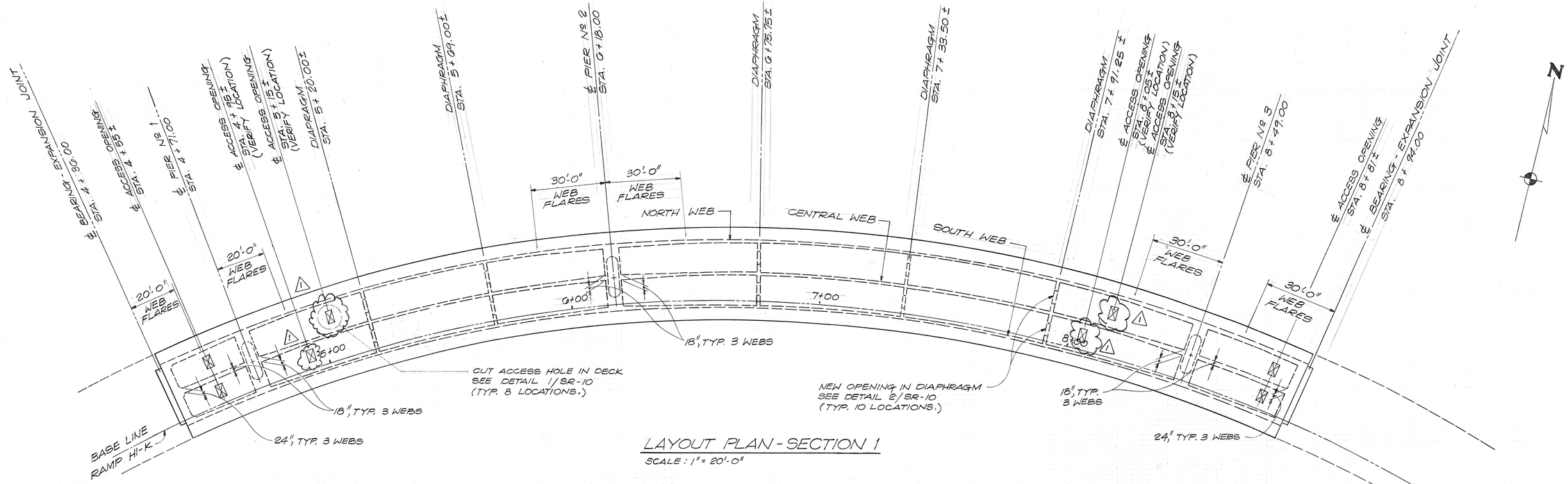

LAYOUT PLAN - SECTION 1

SCALE: 1" = 20'-0"

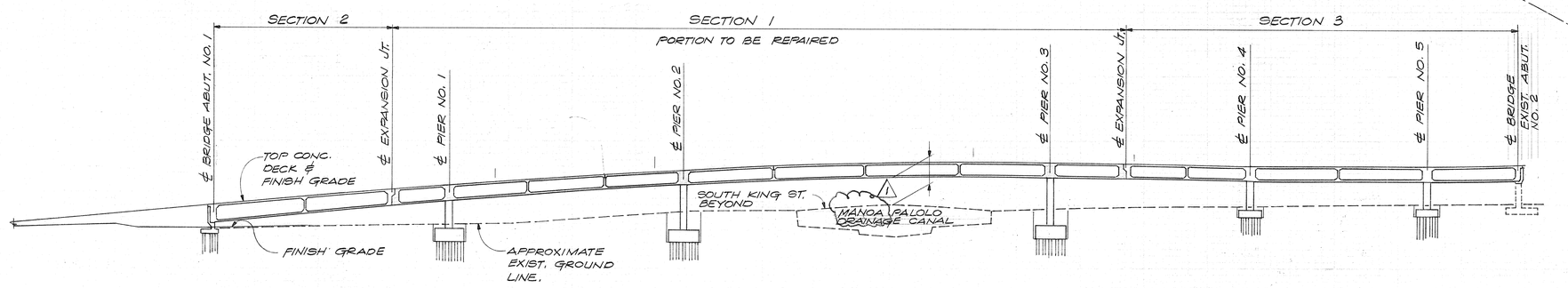

LONGITUDINAL SECTION ALONG BASE LINE RAMP HI-K

SCALE: 1" = 40'-0"

Y. C. YANG REGISTERED PROFESSIONAL ENGINEER No. 2170 HAWAII, U.S.A.

C.O. 114 S-2

NO.	REVISION	DATE
1		7-2-82

DESIGN ____ DRAWN B. BANSUELO CHECKED ____

PROJECT Nº ____

T.Y. LIN INTERNATIONAL
STRUCTURAL ENGINEERING
315 Bay St., San Francisco, Ca. 94133. Tel. (415) 982-1050

Issued For	Date	By
REVIEW	5-82	D.C.

SHEET TITLE: LAYOUT PLAN & LONGITUDINAL SECTION

PROJECT: KAPIOLANI INTERCHANGE ON-RAMP REPAIRS
F.A.I. PROJECT NO. I-HI-1 (157): 24

SHEET Nº SR-2
SHEET 2 OF 12 SHEETS

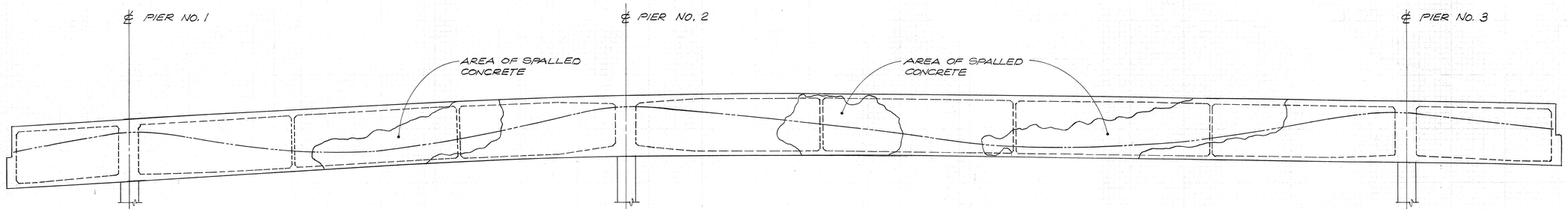

ELEVATION - SOUTH WEB
SCALE: 1/16" = 1'-0" HORIZ., 1/8" = 1'-0" VERT.

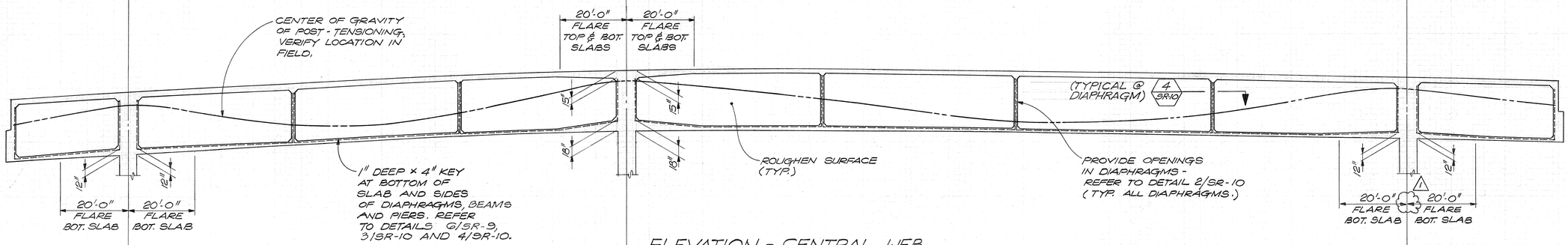

ELEVATION - CENTRAL WEB
SCALE: 1/16" = 1'-0" HORIZ., 1/8" = 1'-0" VERT.

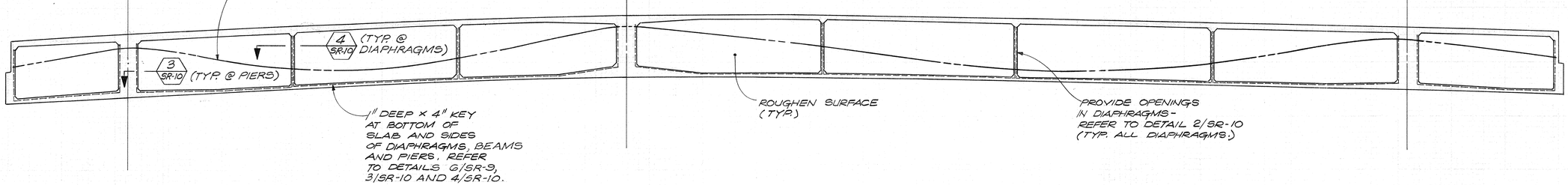

ELEVATION - NORTH WEB
SCALE: 1/16" = 1'-0" HORIZ., 1/8" = 1'-0" VERT.

C.O. 114 S-3

NO.	REVISION	DATE
1		7-2-82

Y. C. YANG REGISTERED PROFESSIONAL ENGINEER No. 2170 HAWAII, U.S.A.

DRAWN B. BANGUELO CHECKED
DESIGN
PROJECT Nº

T.Y. LIN INTERNATIONAL
STRUCTURAL ENGINEERING
315 Bay St., San Francisco, Ca. 94133. Tel. (415) 982-1050

Issued For	Date	By
REVIEW	5-82	D.C.

SHEET TITLE: DEMOLITION PLAN

PROJECT: KAPIOLANI INTERCHANGE ON-RAMP REPAIRS
F.A.I. PROJECT NO. I-HI-1 (157) : 24

SHEET Nº SR-3
SHEET 3 OF 12 SHEETS

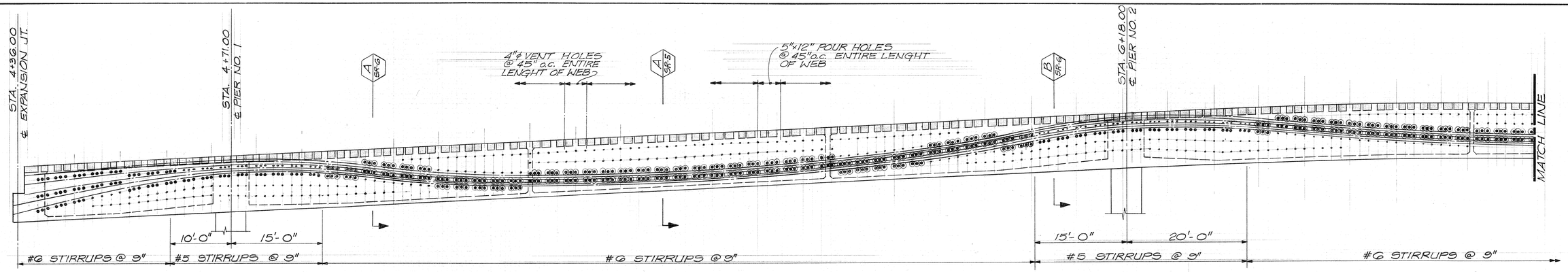

ELEVATION - SOUTH WEB
SCALE: 1/8" = 1'-0"

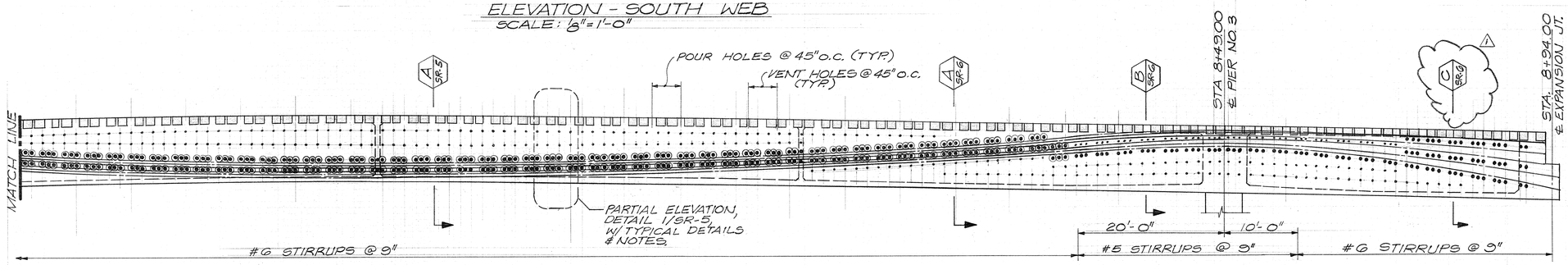

ELEVATION - SOUTH WEB (CONTINUED)
SCALE: 1/8" = 1'-0"

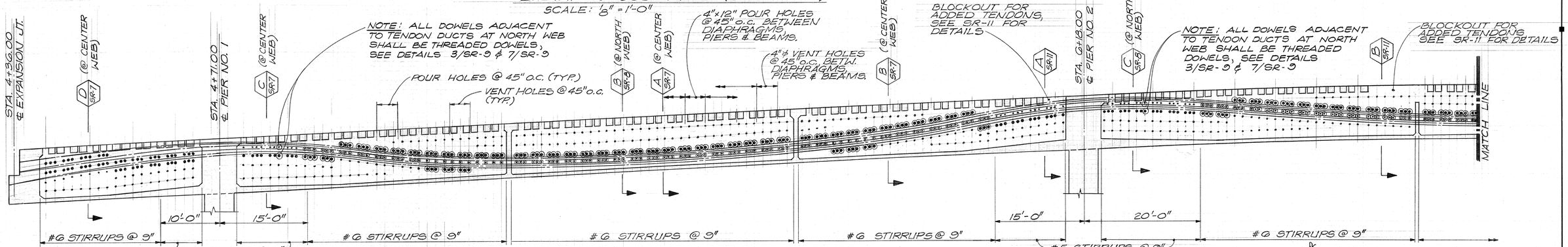

DOWEL CONFIGURATION SHOWN FOR CENTER WEB - FOR CONFIGURATION AT NORTH WEB SEE PARTIAL ELEVATION B/SR-10

ELEVATION - NORTH & CENTER WEB
(CENTER WEB SHOWN; NORTH WEB SIMILAR EXCEPT AS NOTED)
SCALE: 1/8" = 1'-0"

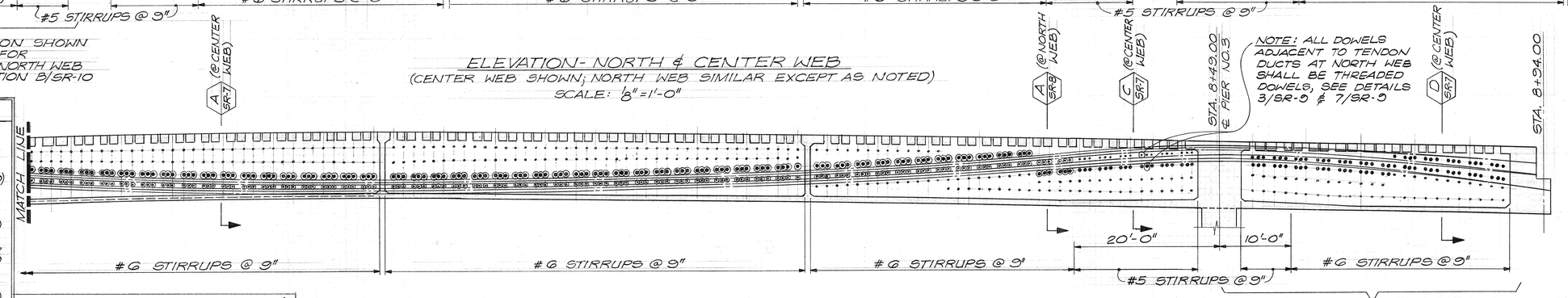

DOWEL CONFIGURATION SHOWN FOR CENTER WEB - FOR CONFIGURATION AT NORTH WEB SEE PARTIAL ELEVATION C/SR-10.

LEGEND

- POST-TENSIONING DUCT (EXISTING)
- #6 EMBEDDED DOWELS (REFER TO DETAIL 4/SR-9)
- #5 EMBEDDED DOWELS (REFER TO DETAILS 2/SR-9 & 2A/SR-9)
- #6 THREADED DOWELS (REFER TO DETAIL 1/SR-9 FOR CENTER & SOUTH WEB; DETAIL 3/SR-9 FOR NORTH WEB)
- #5 THREADED DOWELS (REFER TO DETAIL 5/SR-9 FOR CENTER & SOUTH WEB; DETAIL 7/SR-9 FOR NORTH WEB)
- 5-#4 THREADED DOWELS AT NORTH & CENTER WEB ONLY

ELEVATION - NORTH & CENTER WEB (CONTINUED)
(CENTER WEB SHOWN; NORTH WEB SIMILAR EXCEPT AS NOTED)
SCALE: 1/8" = 1'-0"

C.O. 114 S-4

Y. C. YANG REGISTERED PROFESSIONAL No. 2120 HAWAII, U.S.A.

NO.	REVISION	DATE
2		7-23-82
1		7-2-82

PROJECT Nº
DESIGN
DRAWN D. CLOVER
CHECKED

T.Y. LIN INTERNATIONAL
STRUCTURAL ENGINEERING
315 Bay St., San Francisco, Ca. 94133. Tel. (415) 982-1050

Issued For	Date	By
REVIEW	5-82	D.C.

SHEET TITLE: WEB ELEVATIONS - REPAIRS

PROJECT: KAPIOLANI INTERCHANGE ON-RAMP REPAIRS
F.A.I. PROJECT NO. I-H1-1 (157):24

SHEET Nº SR-4
SHEET 4 OF 12 SHEETS

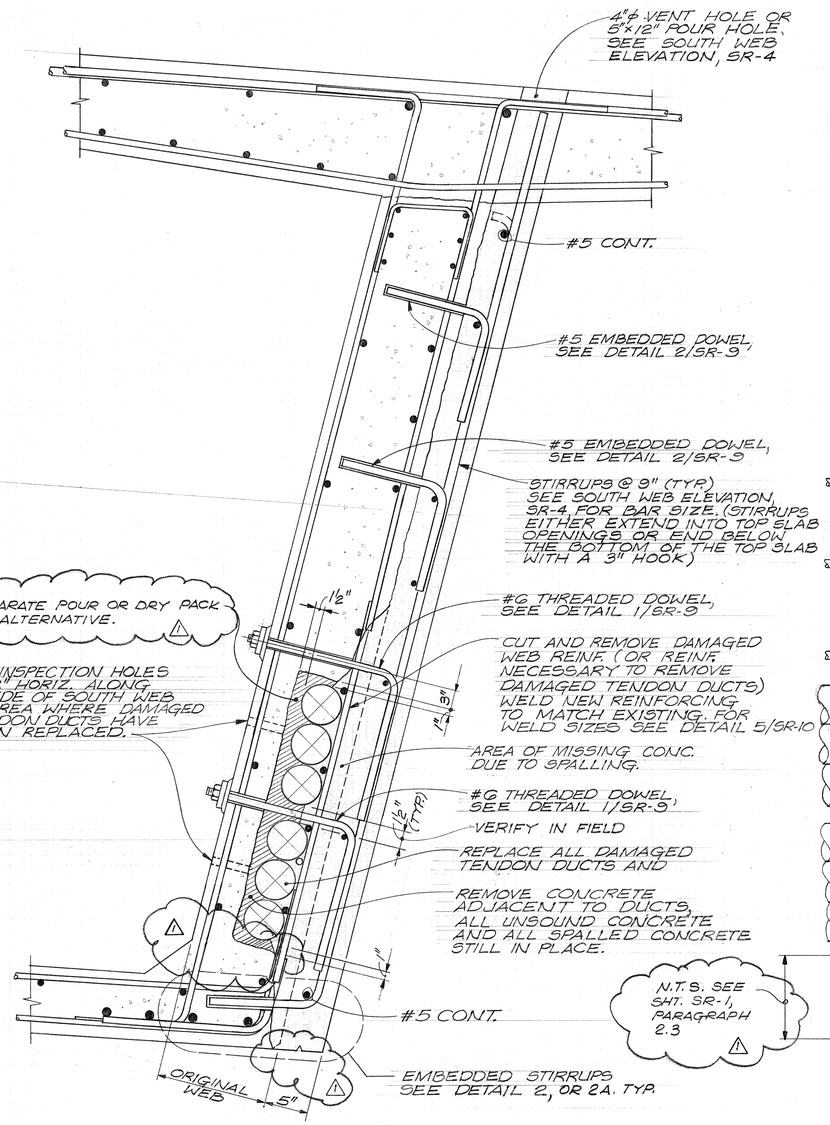

SECTION A
SCALE: 1'/2"=1'-0" SR-4

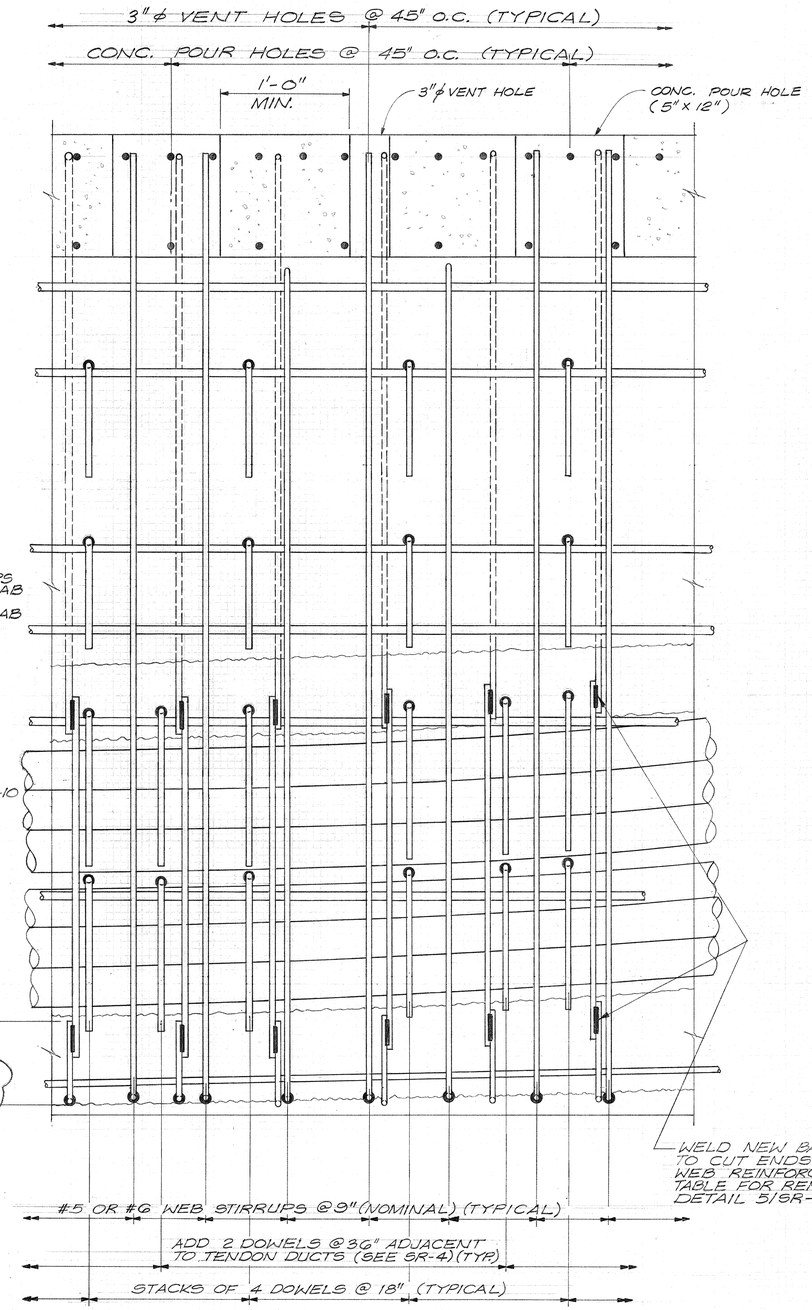

ELEVATION - PORTION OF SOUTH WEB
DETAIL 1
SCALE: 1'/2"=1'-0" SR-5

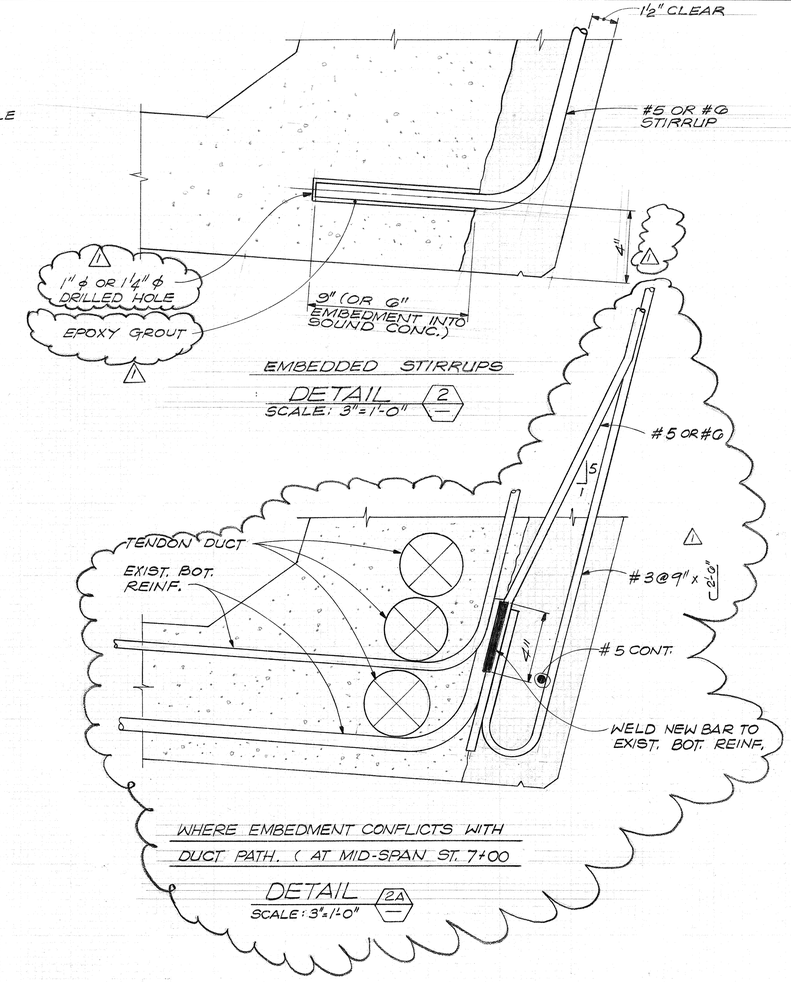

EMBEDDED STIRRUPS
DETAIL 2
SCALE: 3"=1'-0"

WHERE EMBEDMENT CONFLICTS WITH DUCT PATH. (AT MID-SPAN ST. 7+00

DETAIL 2A
SCALE: 3"=1'-0"

Y. C. YANG REGISTERED PROFESSIONAL ENGINEER No. 2370 HAWAII, U.S.A.

C.O. 114 S-5

NO.	REVISION	DATE
1		7-2-82

DESIGN ____ DRAWN D. CLOVER CHECKED ____ PROJECT Nº ____

T.Y. LIN INTERNATIONAL
STRUCTURAL ENGINEERING
315 Bay St., San Francisco, Ca. 94133. Tel. (415) 982-1050

Issued For	Date	By
REVIEW	5-82	D.C.

SHEET TITLE: TYPICAL SOUTH WEB SECTION, ELEVATION & DETAILS

PROJECT: KAPIOLANI INTERCHANGE ON-RAMP REPAIRS
F.A.I. PROJECT NO. I-HI-1 (157) : 24

SHEET Nº SR-5
SHEET 5 OF 12 SHEETS

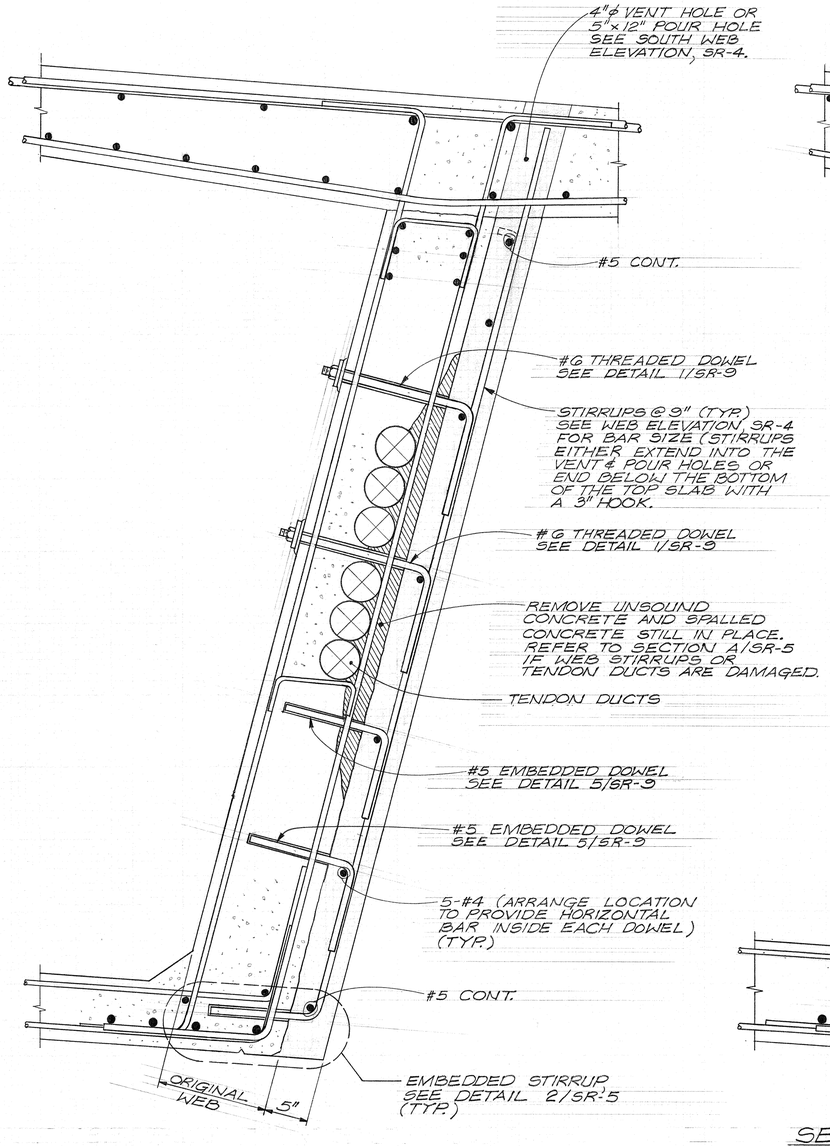

SECTION A SR-4
SCALE: 1½"=1'-0"

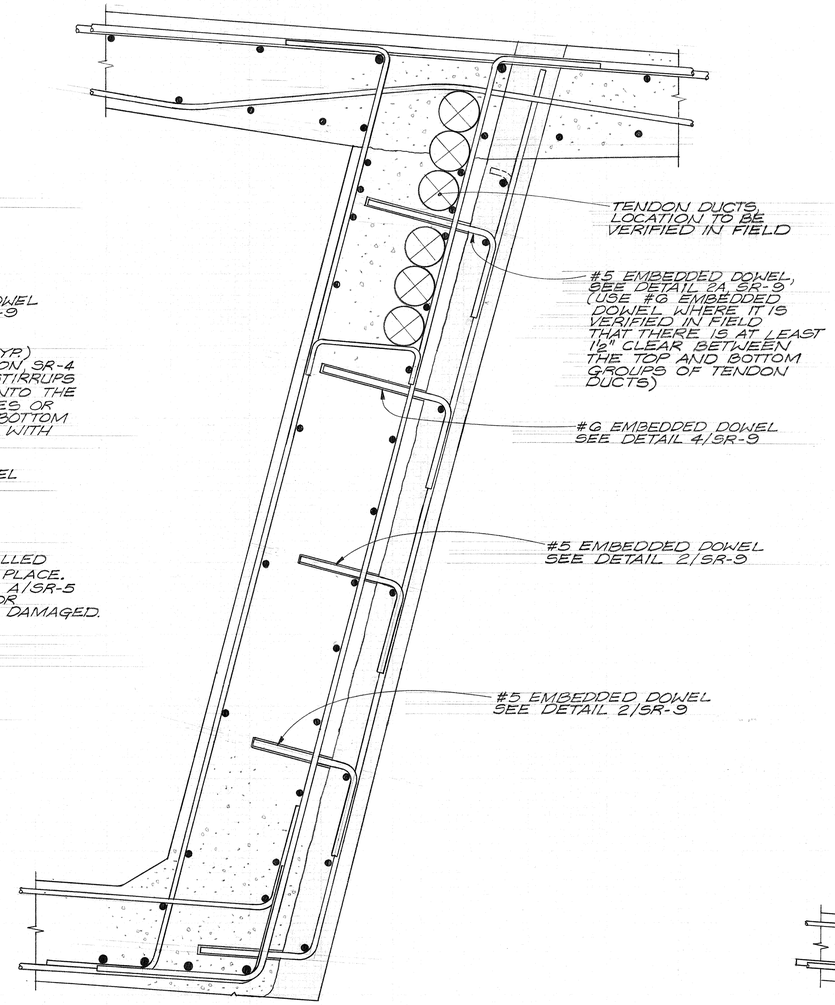

SECTION B SR-4
SCALE: 1½"=1'-0"

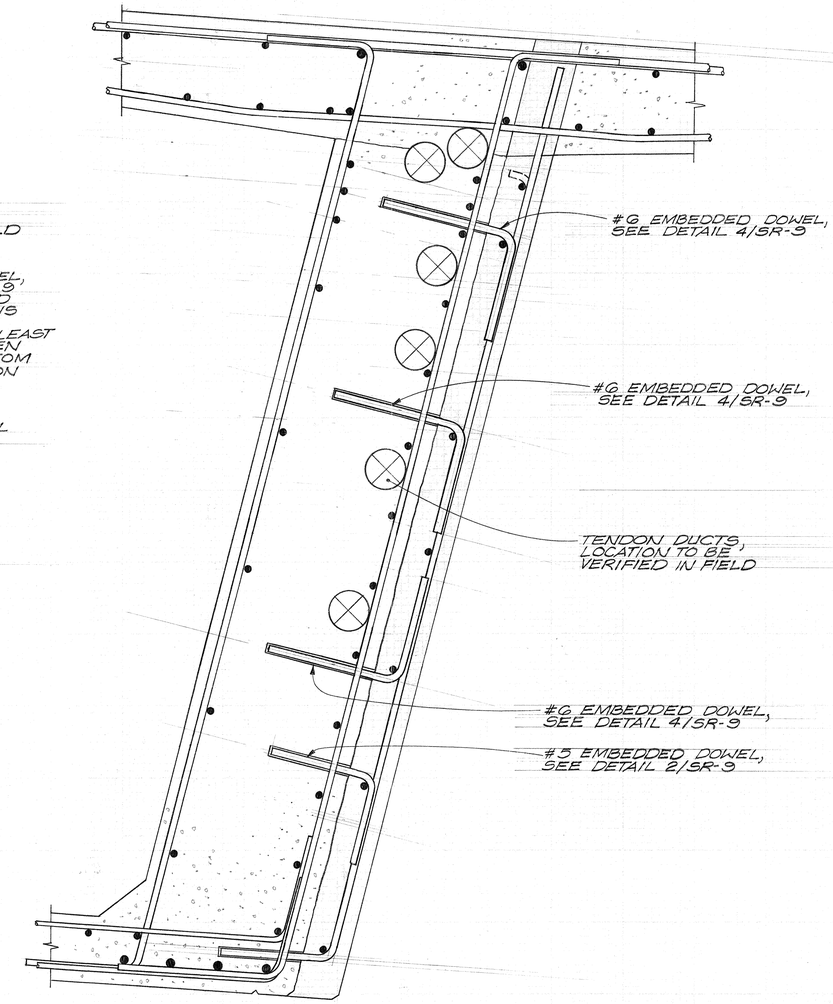

SECTION C SR-4
SCALE: 1½"=1'-0"

Y. C. YANG REGISTERED PROFESSIONAL ENGINEER No. 2170 HAWAII, U.S.A.

C.O. 114 S-6

NO.	REVISION	DATE
1		7-2-82

PROJECT Nº ____ DESIGN ____ DRAWN D. CLOVER CHECKED ____

T.Y. LIN INTERNATIONAL
STRUCTURAL ENGINEERING
315 Bay St., San Francisco, Ca. 94133. Tel. (415) 982-1050

Issued For	Date	By
REVIEW	5-82	D.C.

SHEET TITLE: SOUTH WEB SECTIONS

PROJECT: KAPIOLANI INTERCHANGE ON-RAMP REPAIRS
F.A.I. PROJECT NO. I-H1-1(157) : 24

SHEET Nº SR-6
SHEET 6 OF 12 SHEETS

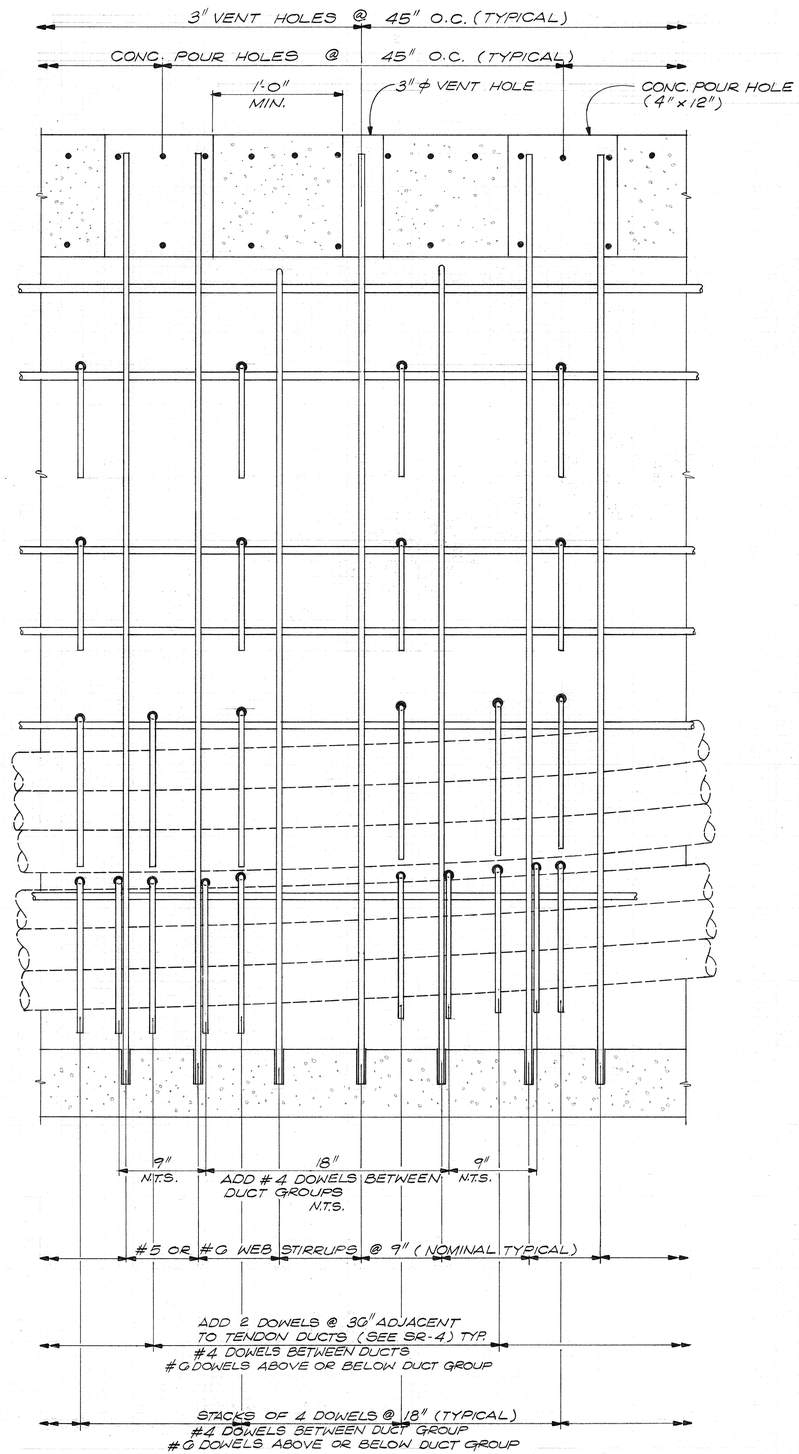

ELEVATION - PORTION OF NORTH & CENTER WEB

DETAIL 1 / 12" = 1'-0"

C.O. 114 S-7

Y. C. YANG REGISTERED PROFESSIONAL ENGINEER No. 4170 HAWAII, U.S.A.

NO.	REVISION	DATE

DESIGN ____ DRAWN S. BAUGUELO CHECKED ____ PROJECT Nº ____

T.Y. LIN INTERNATIONAL
STRUCTURAL ENGINEERING
315 Bay St., San Francisco, Ca. 94133. Tel. (415) 982-1050

Issued For	Date	By

SHEET TITLE: NORTH & CENTER WEB ELEVATION

PROJECT: KAPIOLANI INTERCHANGE ON-RAMP REPAIRS
F.A.I. PROJECT NO. I-HI-1 (157) : 24

SHEET Nº SR-6A
SHEET 6A OF 12 SHEETS

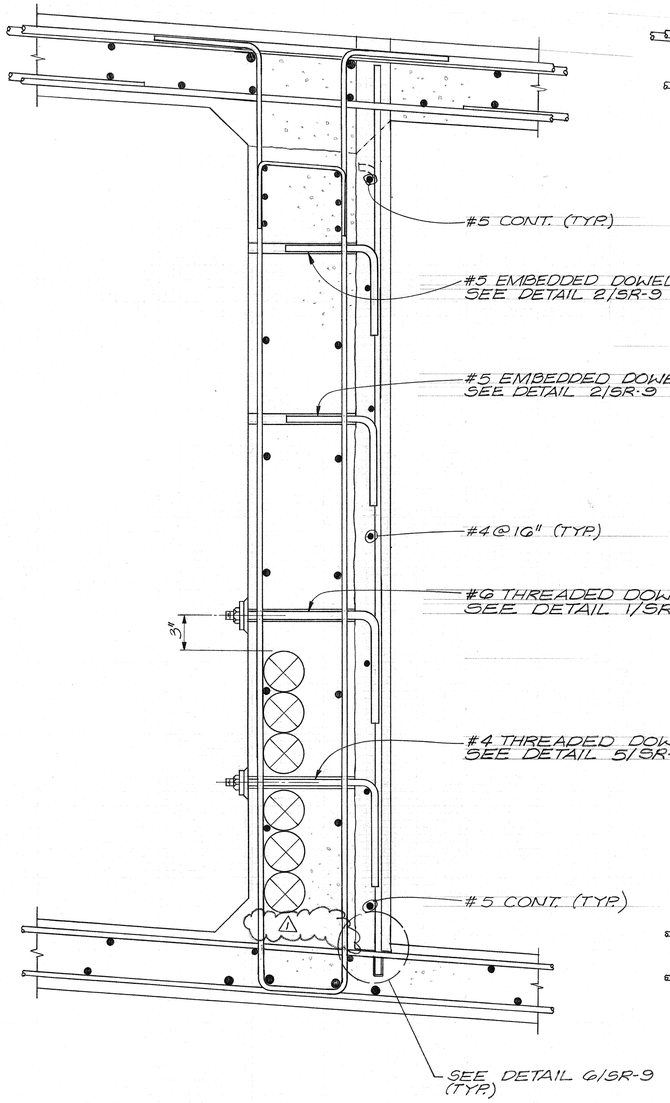

SECTION A SR-9
SCALE : 1/2" = 1'-0"

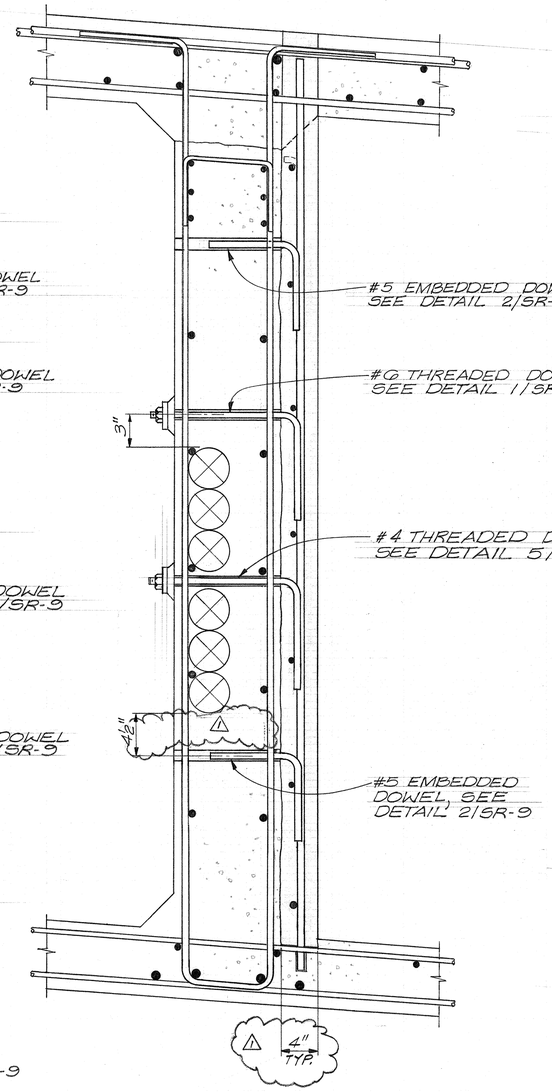

SECTION B SR-9
SCALE : 1/2" = 1'-0"

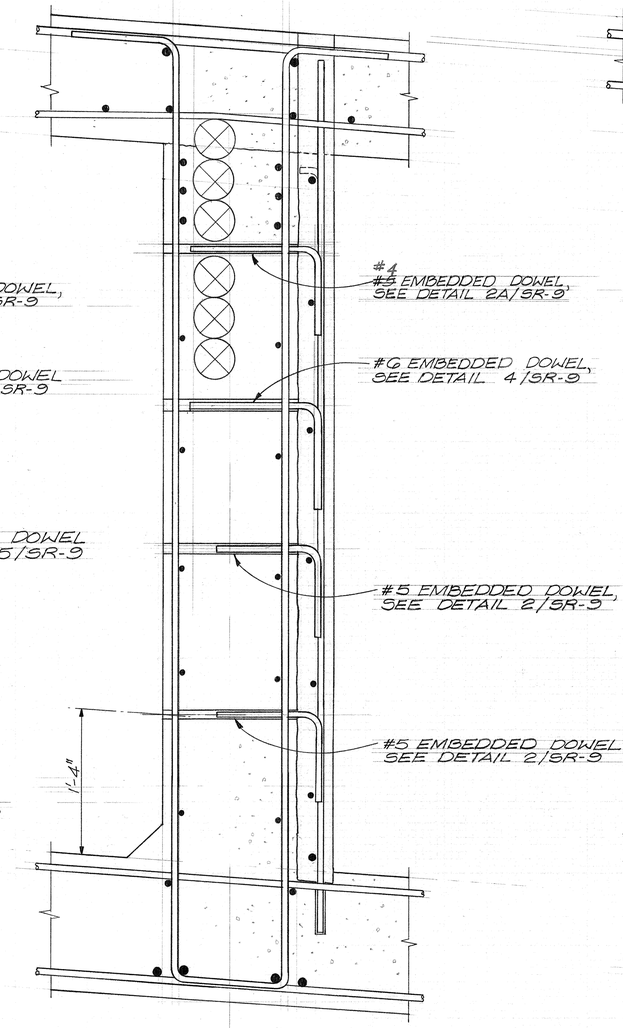

SECTION C SR-9
SCALE : 1/2" = 1'-0"

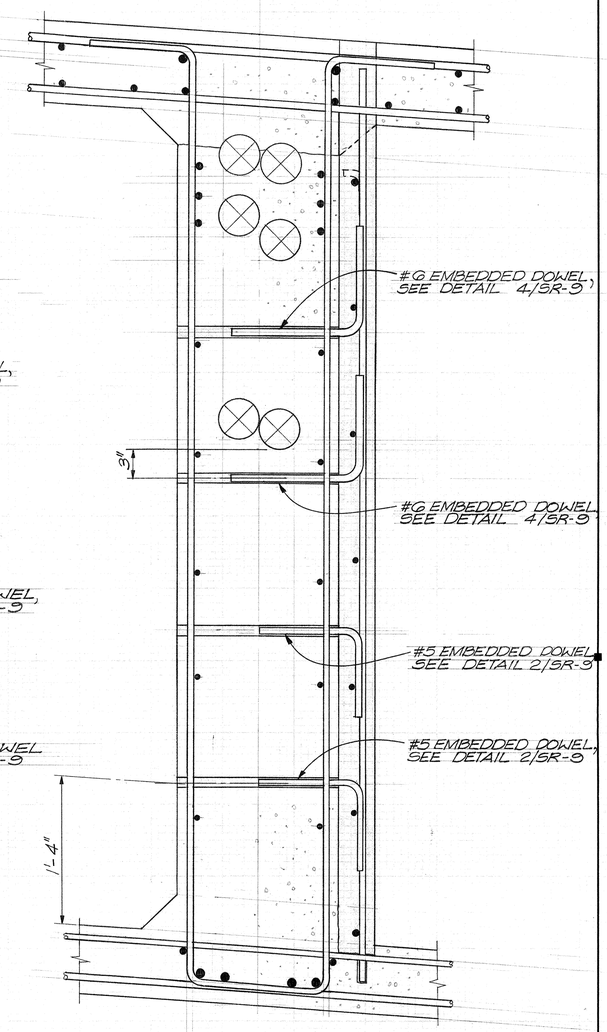

SECTION D SR-9
SCALE : 1/2" = 1'-0"

Y. C. YANG REGISTERED PROFESSIONAL No. 2170 HAWAII, U.S.A.

C.O. 114 S-8

NO.	REVISION	DATE
1		7-2-82

DESIGN ____ DRAWN D.CLOVER CHECKED ____ PROJECT Nº ____

T.Y. LIN INTERNATIONAL
STRUCTURAL ENGINEERING
315 Bay St., San Francisco, Ca. 94133. Tel. (415) 982-1050

Issued For	Date	By
REVIEW	5-82	D.C.

SHEET TITLE: CENTER WEB SECTIONS

PROJECT: KAPIOLANI INTERCHANGE ON-RAMP REPAIRS
F.A.I. PROJECT NO. I-HI-1(157) : 24

SHEET Nº SR-7
SHEET 7 OF 12 SHEETS

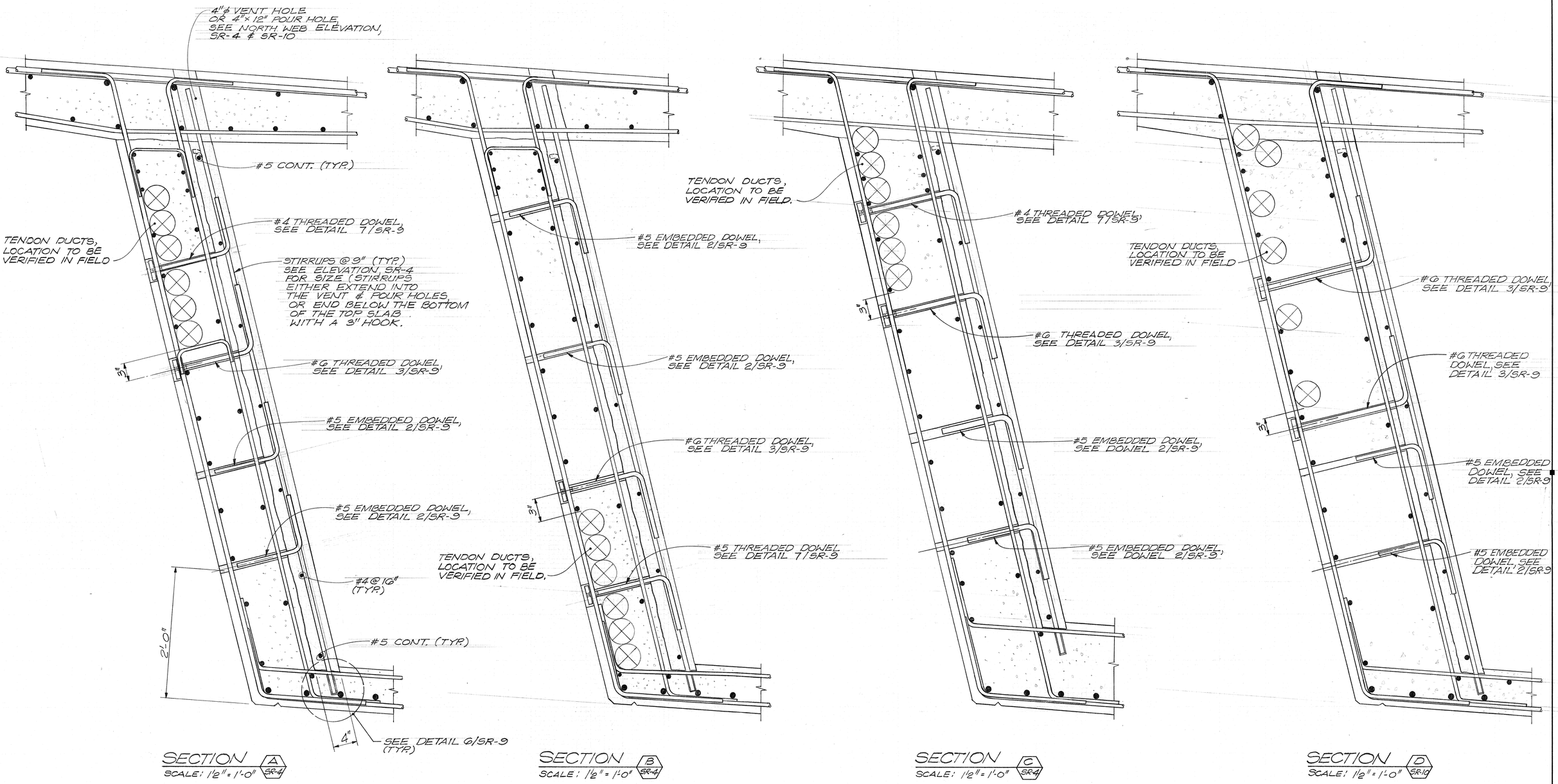

Y. C. YANG
REGISTERED PROFESSIONAL ENGINEER
No. 2170
HAWAII, U.S.A.

C.O. 114 S-9

NO.	REVISION	DATE
1		7-2-82

DESIGN ____ DRAWN D.CLOVER CHECKED ____ PROJECT Nº ____

T.Y. LIN INTERNATIONAL
STRUCTURAL ENGINEERING
315 Bay St., San Francisco, Ca. 94133. Tel. (415) 982-1050

Issued For	Date	By
REVIEW	5-82	D.C.

SHEET TITLE: NORTH WEB SECTIONS

PROJECT: KAPIOLANI INTERCHANGE ON-RAMP REPAIRS
F.A.I. PROJECT NO. I-HI-1 (157): 24

SHEET Nº
SR-8
SHEET 8 OF 12 SHEETS

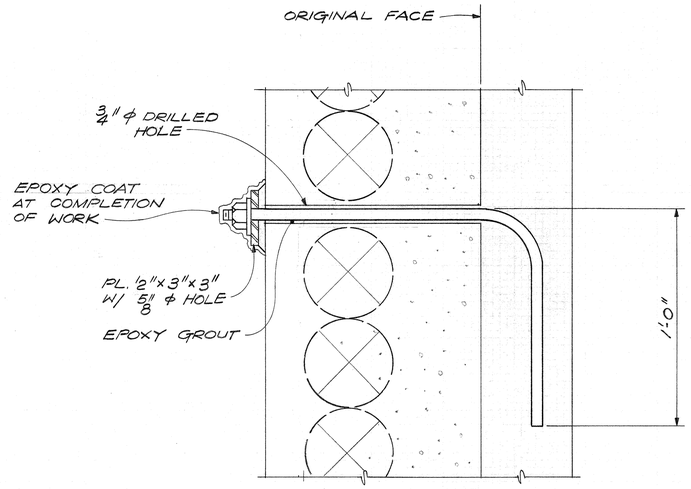

#4 THREADED DOWEL

DETAIL 5 (SR-7)
SCALE: 3"=1'-0"

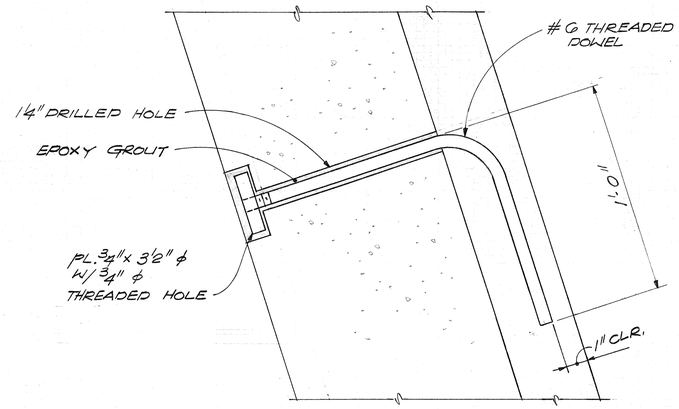

6 THREADED DOWEL
@ NORTH WEB.

DETAIL 3 (SR-8)
SCALE: 3"=1'-0"

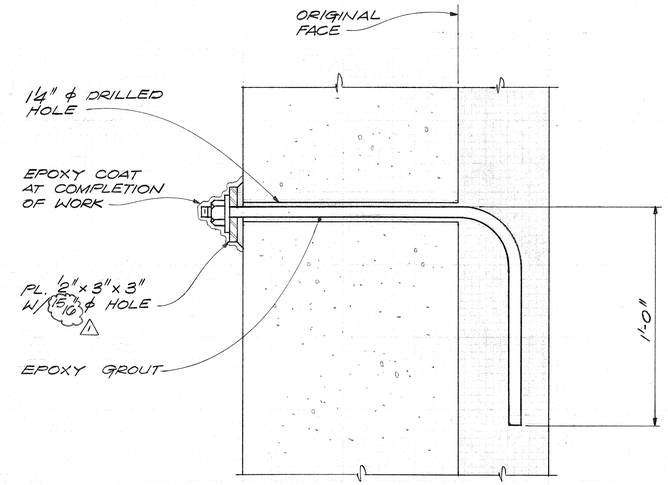

6 THREADED DOWEL

DETAIL 1 (SR-5)
SCALE: 3"=1'-0"

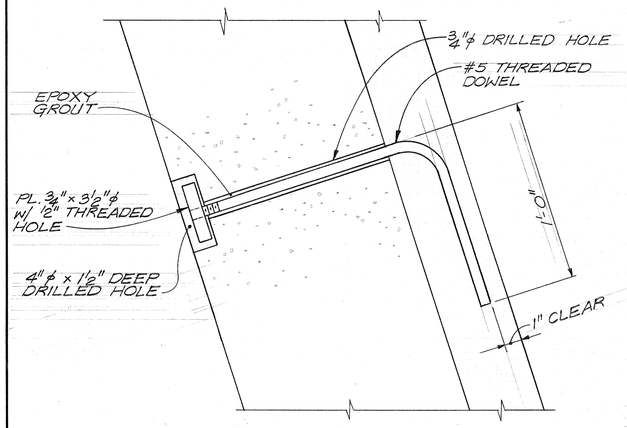

4 THREADED DOWEL @ NORTH WEB

DETAIL 7 (SR-8)
SCALE: 3"=1'-0"

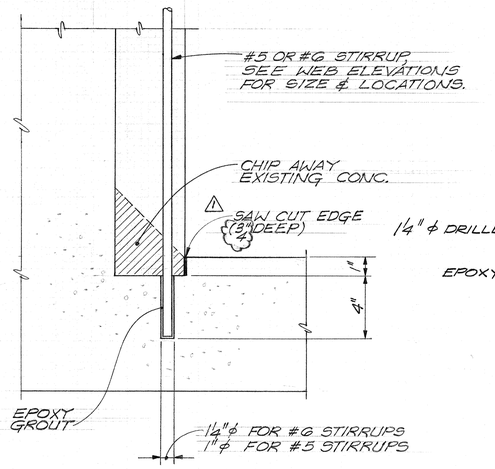

DETAIL 6 (SR)
SCALE: 3"=1'-0"

TYPICAL KEY AND STIRRUP EMBEDMENT AT BOTTOM SLAB, @ NORTH AND CENTER WEBS.

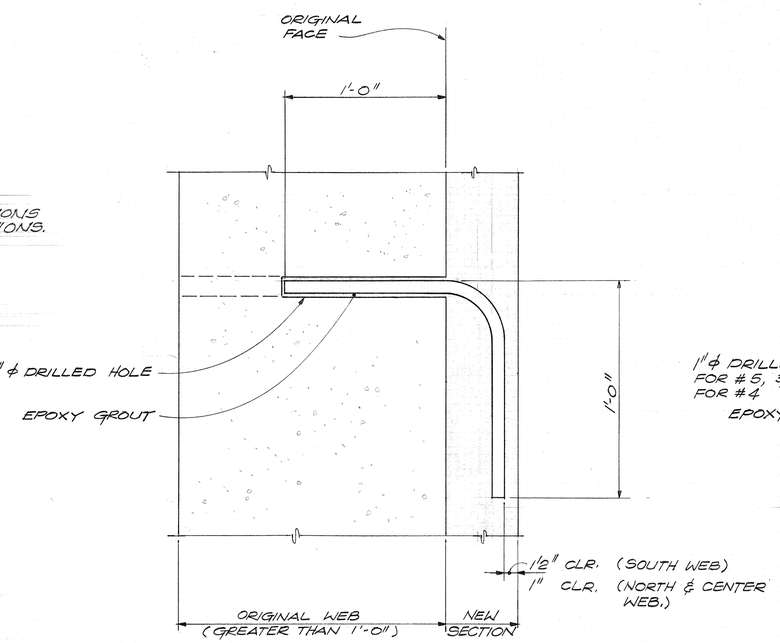

6 EMBEDDED DOWEL

DETAIL 4 (SR-6)
SCALE: 3"=1'-0"

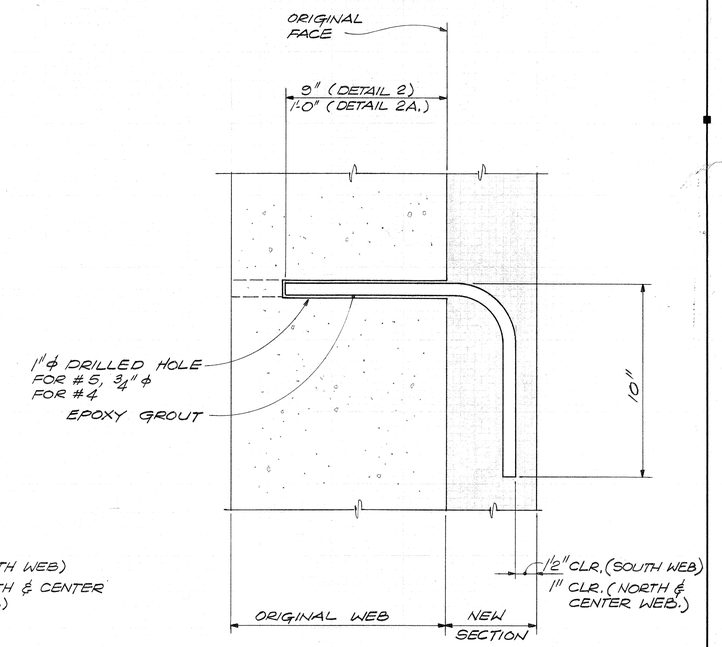

#5 EMBEDDED DOWEL

DETAIL 2 (SR-5) 2A (SR-7)
SCALE: 3"=1'-0"

Y. C. YANG
REGISTERED PROFESSIONAL ENGINEER
No. 2170
HAWAII, U.S.A.

C.O. 114 S-10

NO.	REVISION	DATE
1		7-2-82

DRAWN B. SANSUELO CHECKED
DESIGN
PROJECT Nº

T.Y. LIN INTERNATIONAL
STRUCTURAL ENGINEERING
315 Bay St., San Francisco, Ca. 94133. Tel. (415) 982-1050

Issued For	Date	By
REVIEW	5-82	D.C.

SHEET TITLE: DOWEL DETAILS

PROJECT: KAPIOLAN INTERCHANGE ON-RAMP REPAIRS
F.A.I. PROJECTS NO. I-HI-1 (157) :24

SHEET Nº SR-9
SHEET 9 OF 12 SHEETS

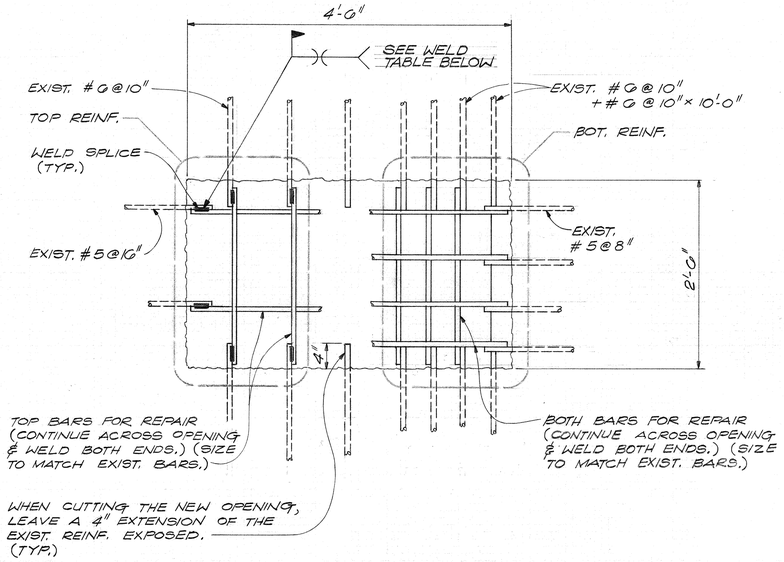

TEMPORARY ACCESS OPENING

TYPICAL TEMPORARY ACCESS OPENING IN TOP DECK

DETAIL 1 / SR-2
SCALE: 1" = 1'-0"

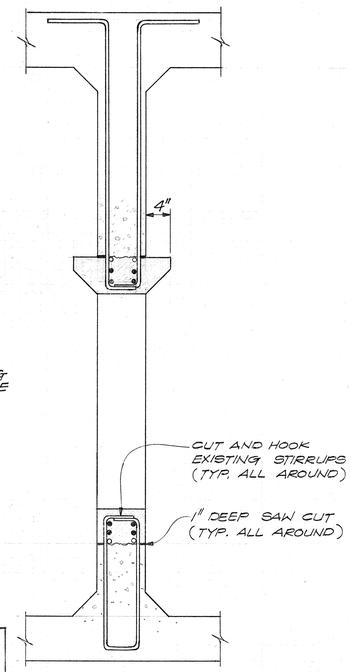

SECTION A / A
1" = 1'-0"

WELD TABLE REPAIR LAP SPLICES				
BAR SIZE	A. DBL. GROOVE THROAT	A. DBL. GROOVE LGTH.	B. SGL. GROOVE THROAT	B. SGL. GROOVE LGTH.
#6	3/8"	1'2"	3/8"	2'2"
#5	1/4"	1'4"	1/4"	2"
#4	1/4"	1"	1/4"	1 3/4"

NOTE:
1. DO NOT WELD WITHIN 2 BAR DIAMETERS OF COLD BENT AREA.
2. USE DBL. GROOVE WELDS UNLESS ONE SIDE IS UNACESSIBLE.
3. USE E90 ELECTRODES FOR GRADE 60 AND E70 ELECTRODES GRADE 40.
4. THE WELDING GROUND SHALL BE ATTACHED DIRECTLY TO THE STEEL BEING WELDED.

DETAIL 5

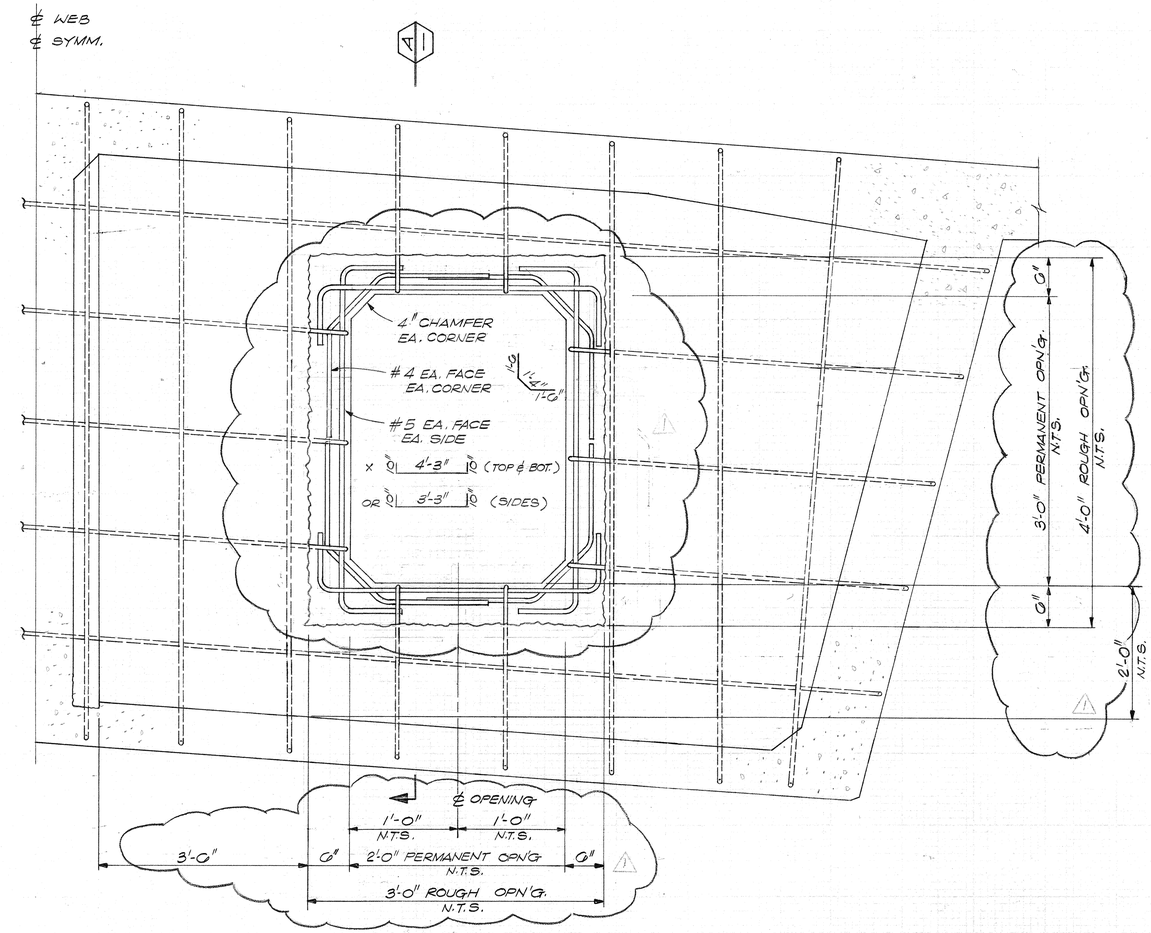

ADDED 4'-0" × 3'-0" PERMANENT DIAPHRAGM OPENING

TYPICAL EACH SIDE AT ALL 8" DIAPHRAGMS - (TOTAL 10 OPENINGS)
1" = 1'-0"

DETAIL 2 / SR-2
SCALE: 1" = 1'-0"

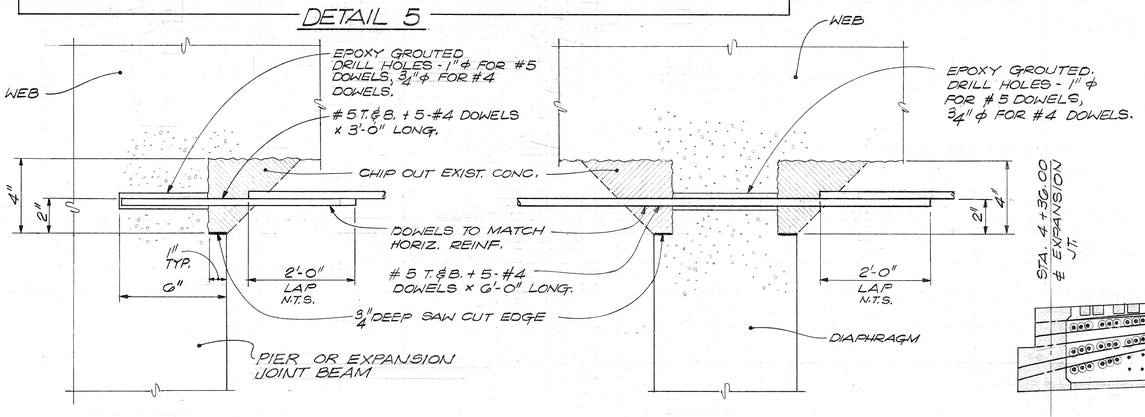

PLAN DETAIL 3 / SR-3
SCALE: 3" = 1'-0"

PLAN DETAIL 4 / SR-3
SCALE: 3" = 1'-0"

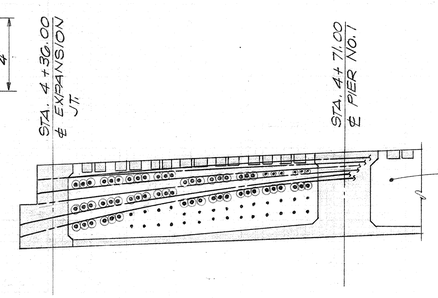

PARTIAL ELEVATION B - NORTH WEB
SCALE: 1/8" = 1'-0"

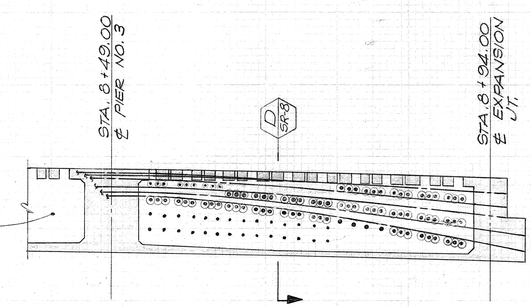

PARTIAL ELEVATION C - NORTH WEB
SCALE: 1/8" = 1'-0"

Y. C. YANG REGISTERED PROFESSIONAL No. 2170 HAWAII, U.S.A.

C.O. 114 S-11

NO.	REVISION	DATE
1		7-2-82

DRAWN B. BANSUELO CHECKED
DESIGN
PROJECT Nº

T.Y. LIN INTERNATIONAL
STRUCTURAL ENGINEERING
315 Bay St., San Francisco, Ca. 94133. Tel. (415) 982-1050

Issued For	Date	By
REVIEW	5-82	D.C.

SHEET TITLE: MISCELLANEOUS DETAILS

PROJECT: KAPIOLANI INTERCHANGE ON-RAMP REPAIRS
F.A.I. PROJECT NO. I-H1-1 (157): 24

SHEET Nº SR-10
SHEET 10 OF 12 SHEETS

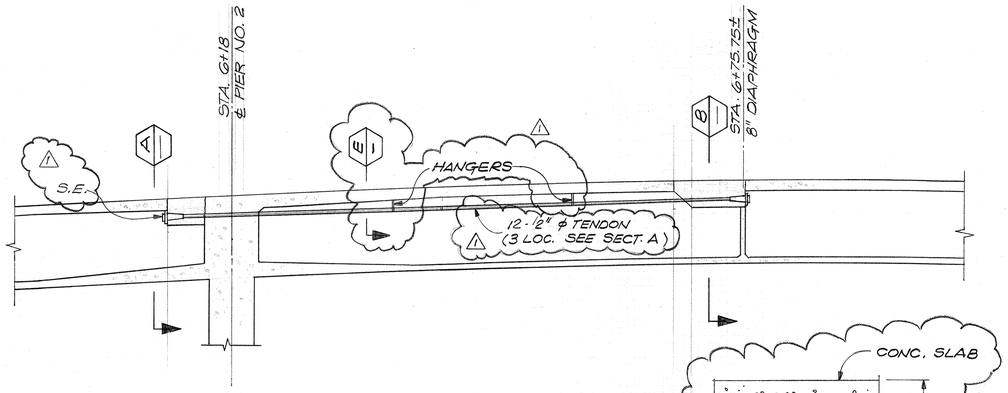

PARTIAL ELEVATION E
SCALE: ⅛" = 1'-0"

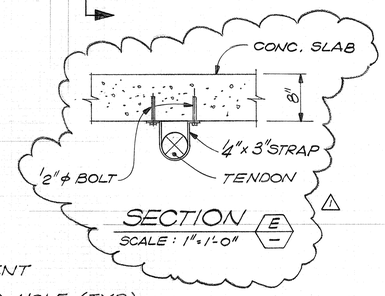

SECTION E
SCALE: 1" = 1'-0"

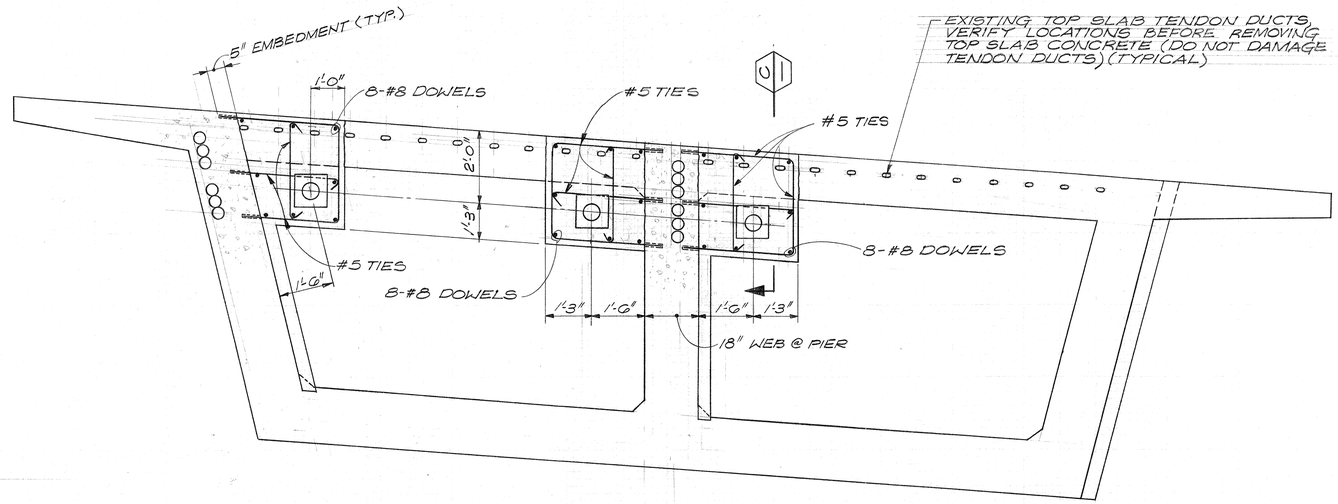

SECTION A (@ PIER NO. 2)
SCALE: ½" = 1'-0"

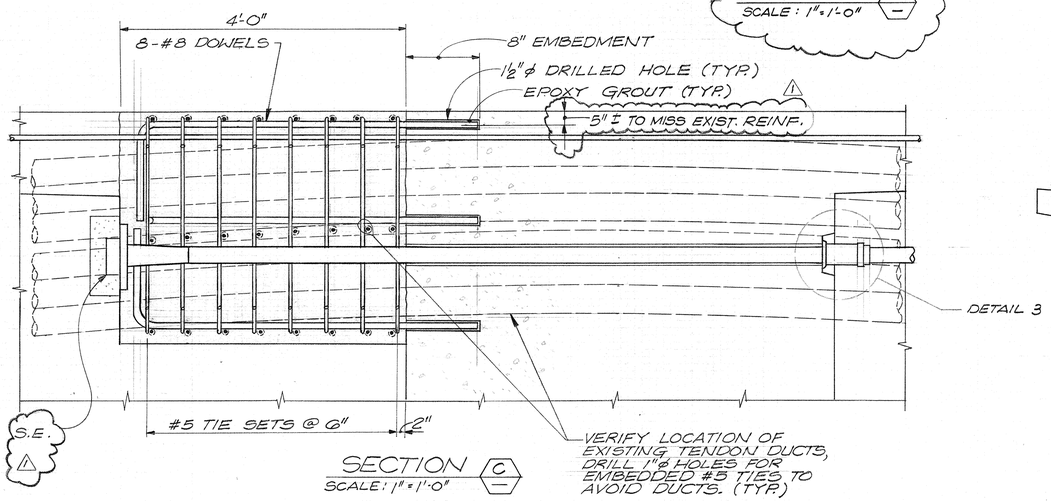

SECTION C
SCALE: 1" = 1'-0"

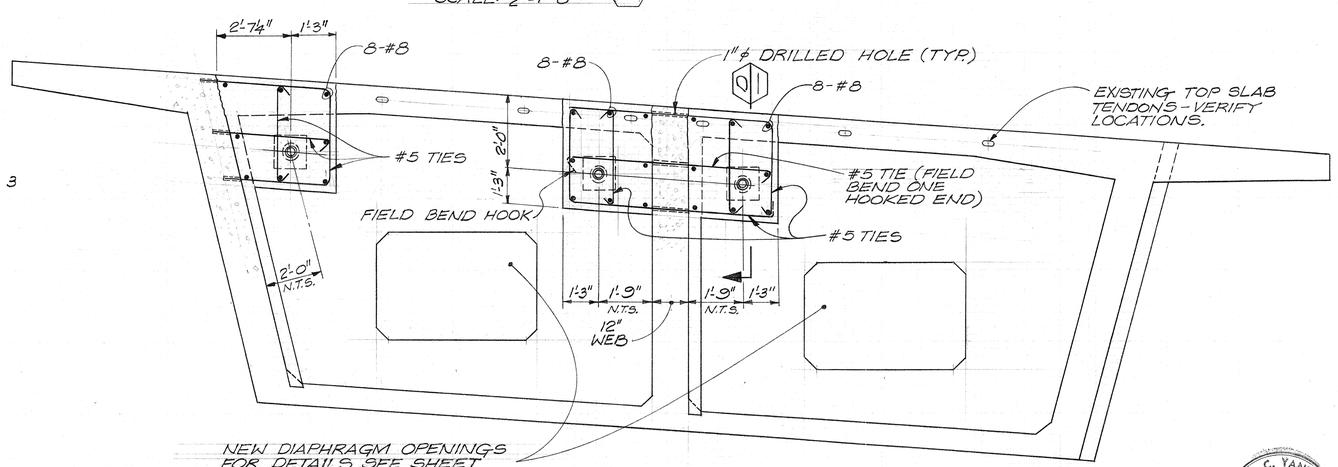

SECTION B (@ DIAPHRAGM)
SCALE: ½" = 1'-0"

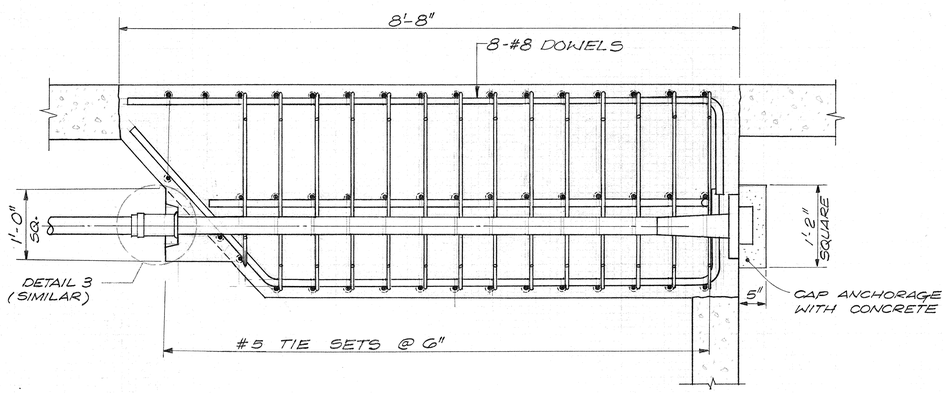

SECTION D
SCALE: 1" = 1'-0"

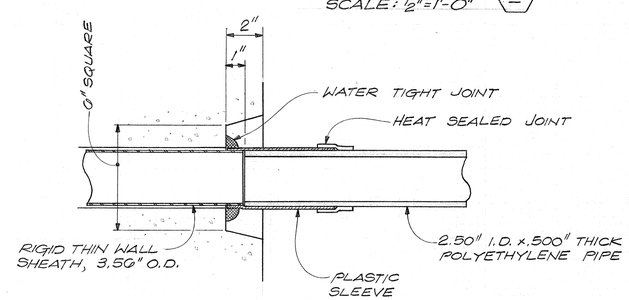

DETAIL 3
SCALE: 3" = 1'-0"

POST-TENSIONING SEQUENCE

1. STRESS WEB TENDONS AS SHOWN AND NOTED ON ORIGINAL SHOP DRAWINGS BY V.S.L. CORP.
2. STRESS THE ADDED TENDON NORTH OF THE CENTER WEB FIRST, THEN THE ADDED TENDON SOUTH OF THE CENTER WEB; FINALLY STRESS THE ADDED TENDON @ THE NORTH WEB. STRESS THESE TENDONS AFTER THE WEB TENDONS HAVE BEEN FULLY GROUTED.
3. GROUT THE ADDED TENDONS.
4. CLOSE THE DECK ACCESS OPENINGS (SR-10)
5. STRESS THE TOP SLAB TENDONS AT PIER NO. 2 AS PER THE ORIGINAL SHOP DRAWINGS.

Y. C. YANG
REGISTERED PROFESSIONAL ENGINEER
No. 2170
HAWAII, U.S.A.

C.O. 114 S-12

NO.	REVISION	DATE
1		7-2-82

PROJECT Nº
DESIGN
DRAWN D.CLOVER
CHECKED

T.Y. LIN INTERNATIONAL
STRUCTURAL ENGINEERING
315 Bay St., San Francisco, Ca. 94133. Tel. (415) 982-1050

Issued For	Date	By
REVIEW	5-82	D.C.

SHEET TITLE: ADDED POST-TENSIONING DETAILS

PROJECT: KAPIOLANI INTERCHANGE ON-RAMP REPAIRS
F.A.I. PROJECT NO. I-H1-1 (157): 24

SHEET Nº SR-11
SHEET 11 OF 12 SHEETS

FED. ROAD DIST. NO.	STATE	FED. AID PROJ. NO.	FISCAL YEAR	SHEET NO.	TOTAL SHEETS
HAWAII	HAW.	I-HI-1(157)24	1979	115	146

℄ Ramp HI-K Curve Data

	(10)	(11)	(12)
Δ	7° 22' 19"	7° 59' 17"	8° 18' 20.7"
R	2100.00	1100.00	103.08
C	270.01	153.24	14.93
T	135.28	76.80	7.48
Lc	270.20	153.36	14.94

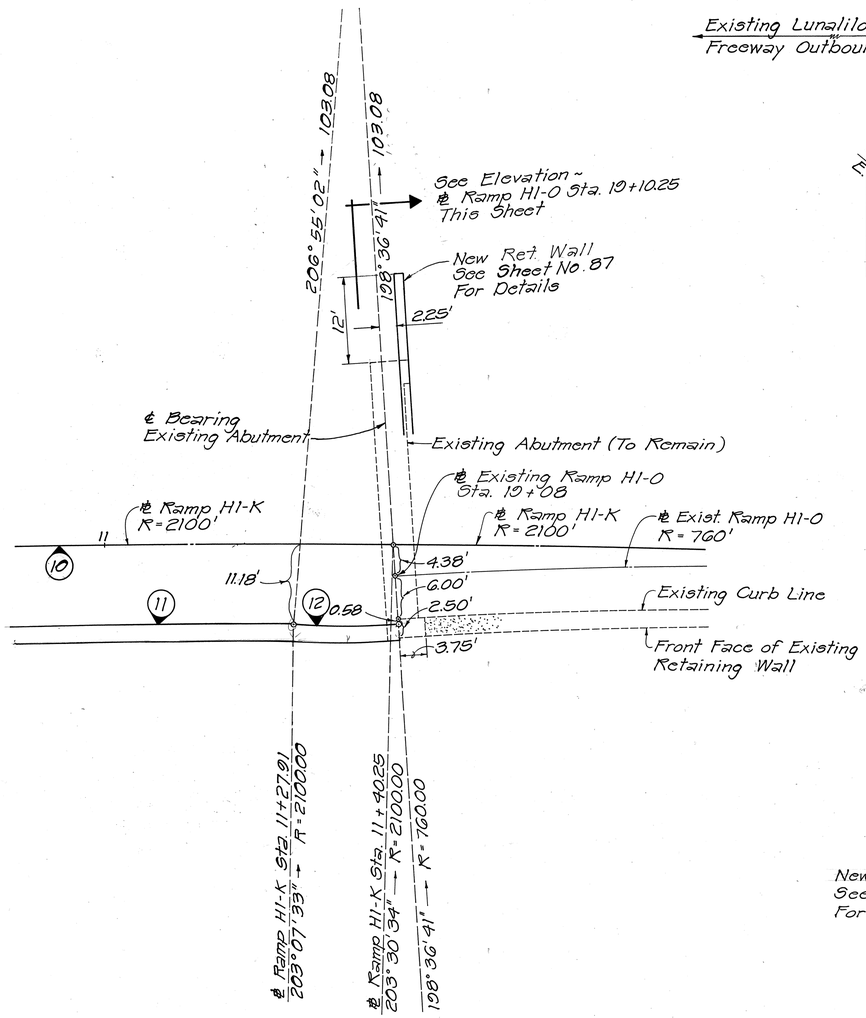

LAYOUT PLAN @ ℄ RAMP HI-K STA. 11+40.25

Scale: 1" = 10'

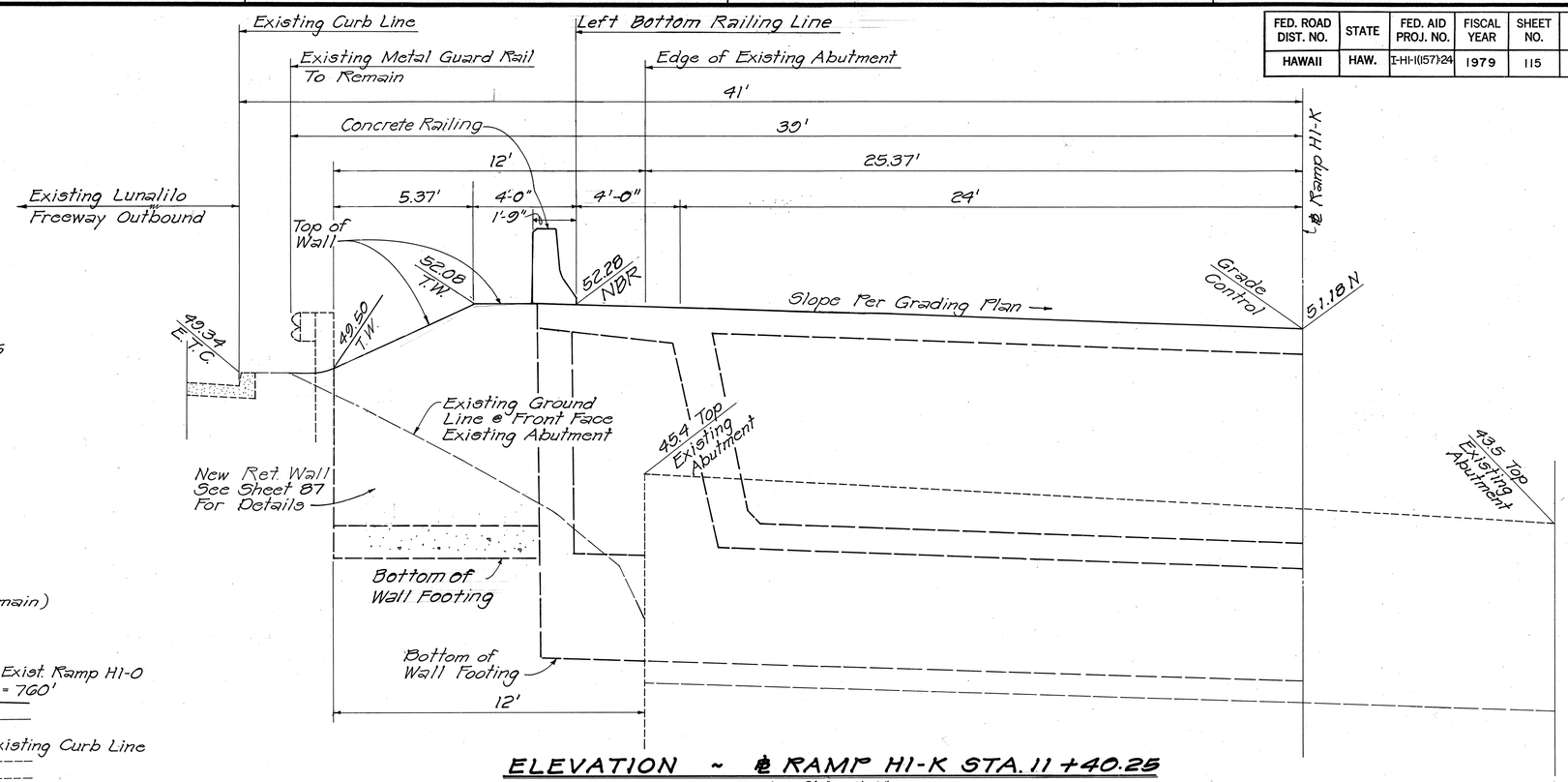

ELEVATION ~ ℄ RAMP HI-K STA. 11+40.25

Scale: 3/8" = 1'-0"

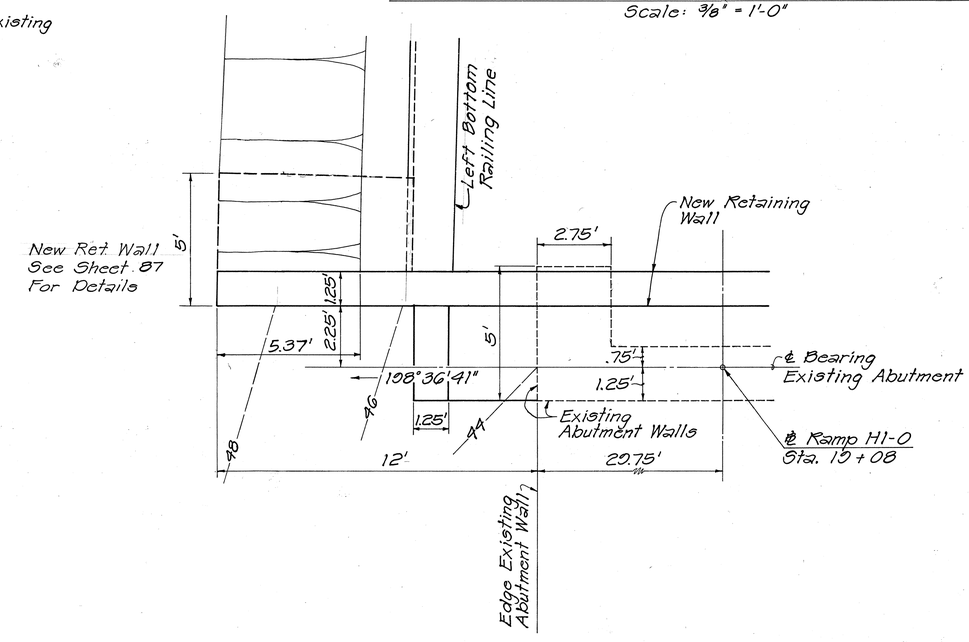

PLAN ~ ℄ RAMP HI-K STA. 11+40.25

Scale: 3/8" = 1'-0"

ORIGINAL PLAN	
	SURVEY PLOTTED BY
	DRAWN BY
	TRACED BY
NOTE BOOK	DESIGNED BY
No.	QUANTITIES BY
	CHECKED BY
	DATE

DONALD Y. H. KAM REGISTERED PROFESSIONAL ENGINEER No. 2214 HAWAII, U.S.A.

THIS WORK WAS PREPARED BY ME OR UNDER MY SUPERVISION

STATE OF HAWAII
DEPARTMENT OF TRANSPORTATION
LAND TRANSPORTATION FACILITIES DIVISION

LAYOUT AND MISCELLANEOUS DETAILS

RAMP HI-K
INTERSTATE ROUTE H-1
KAPIOLANI INTERCHANGE ON-RAMP
F.A.I. PROJ. NO. I-HI-1(157):24

Scale: As Shown Date: 10-15-79

SHEET No. 1 OF 1 SHEETS

FED. ROAD DIST. NO.	STATE	FED. AID PROJ. NO.	FISCAL YEAR	SHEET NO.	TOTAL SHEETS
HAWAII	HAW.	I-HI-1(157)24	1979	116	146

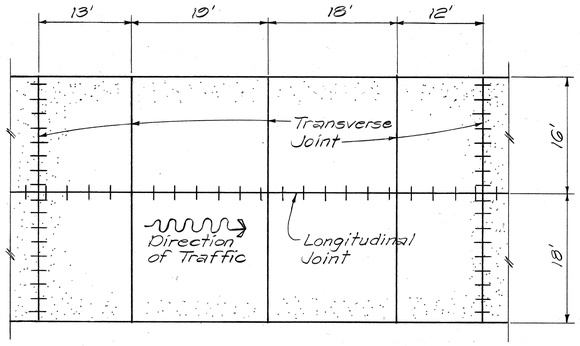

TYPICAL JOINT LOCATION AND LAYOUT PLAN
RAMP STA. 11+60.25 to 12+42.57
Scale: 1" = 10'

CONSTRUCTION NOTES

1. The longitudinal weakened plane joint detail shall be applicable at the intermediate traffic lane edge when two or more lanes are paved in one continuous pour. The straight tie bars shall be placed mechanically to the depth shown on the detail. All other longitudinal joints shall be constructed in accordance with the contact joint detail shown on this plan.
2. Transverse weakened plane joints shall be sawed diagonally as shown, unless otherwise directed by the Engineer.
3. Transverse weakened plane joints shall be spaced at successive intervals of 13', 19', 18', and 12' in the direction of traffic. Repeat for the remaining joints.
4. Transverse contact joints shall be located at a minimum distance of 10' from the nearest planned transverse weakened plane joint.
5. At the outer edge of the P.C.C. pavement, 1/2" radius rounding shall be utilized longitudinally.

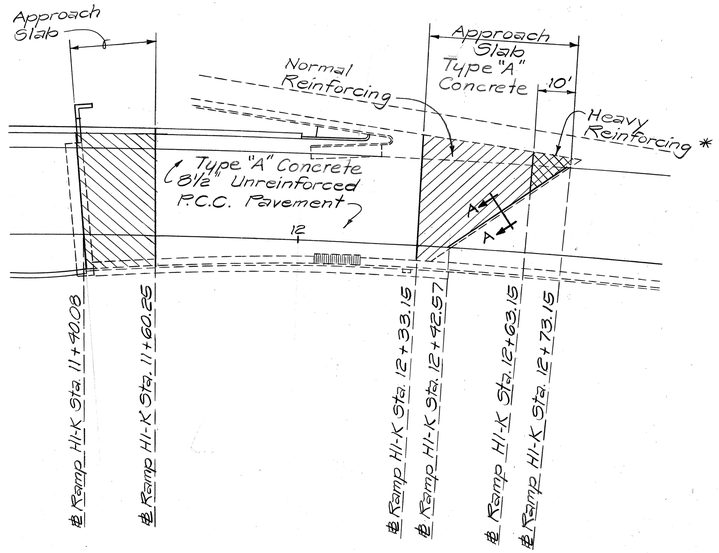

P.C.C. - APPROACH SLAB PLAN
℄ Ramp Sta. 11+40.08 to Sta. 12+73.15
Scale: 1" = 20'

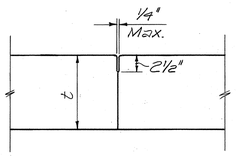

SAWED JOINT

TRANSVERSE WEAKENED PLANE (CONTRACTION) JOINT
Scale: 1" = 1'-0"

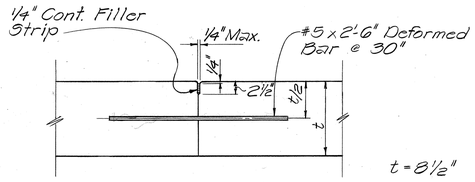

PREFORMED FILLER JOINT

LONGITUDINAL WEAKENED PLANE (CONTRACTION) JOINT
Scale: 1" = 1'-0"

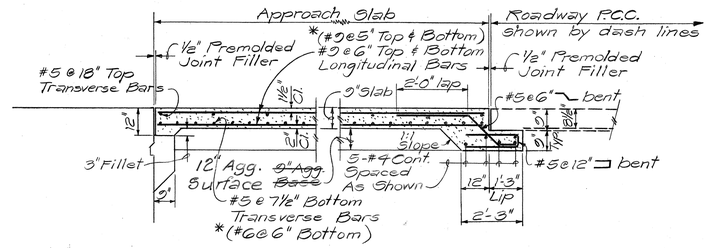

*For Heavy Duty Reinforcing Area Only

TYPICAL APPROACH SLAB
Not To Scale

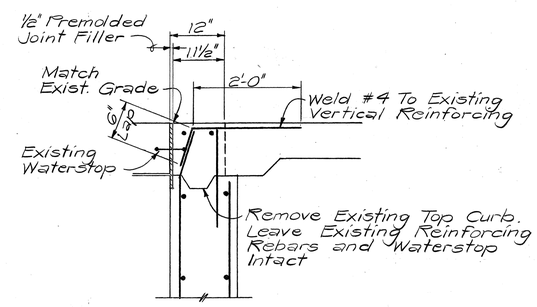

SECTION "A-A"
DETAIL @ EXISTING ABUTMENT
Scale: 3/4" = 1'-0"

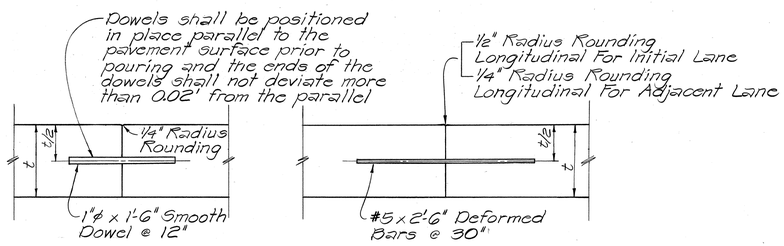

TRANSVERSE CONSTRUCTION (CONTACT) JOINT
Scale: 1" = 1'-0"

LONGITUDINAL CONSTRUCTION (CONTACT) JOINT
Scale: 1" = 1'-0"

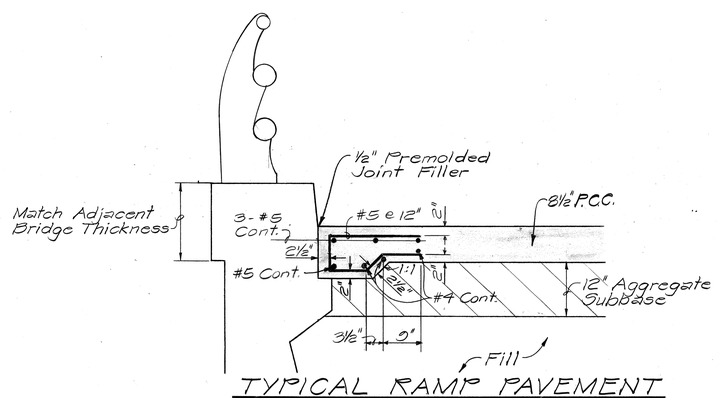

TYPICAL RAMP PAVEMENT SECTION "B-B"
Scale: 3/4" = 1'-0"

Date	Revision
6/12/80	Added Approach Slab Revised P.C.C. Pavt Details

DONALD Y. H. KAM REGISTERED PROFESSIONAL ENGINEER No. 2214 HAWAII, U.S.A.

THIS WORK WAS PREPARED BY ME OR UNDER MY SUPERVISION
Donald Y. H. Kam

STATE OF HAWAII
DEPARTMENT OF TRANSPORTATION
LAND TRANSPORTATION FACILITIES DIVISION

P.C.C. PAVEMENT DETAILS
RAMP HI-K

INTERSTATE ROUTE H-1
KAPIOLANI INTERCHANGE ON-RAMP
F.A.I. PROJ. NO. I-HI-1(157): 24

Scale: As Noted Date: 10-15-79

SHEET No. 1 OF 1 SHEETS

ORIGINAL PLAN | SURVEY PLOTTED BY | DRAWN BY | TRACED BY | DESIGNED BY | QUANTITIES BY | CHECKED BY | DATE | NOTE BOOK | No.

ADD 116

FED. ROAD DIST. NO.	STATE	FED. AID PROJ. NO.	FISCAL YEAR	SHEET NO.	TOTAL SHEETS
HAWAII	HAW.	I-HI-1(157): 24	1979	117	146

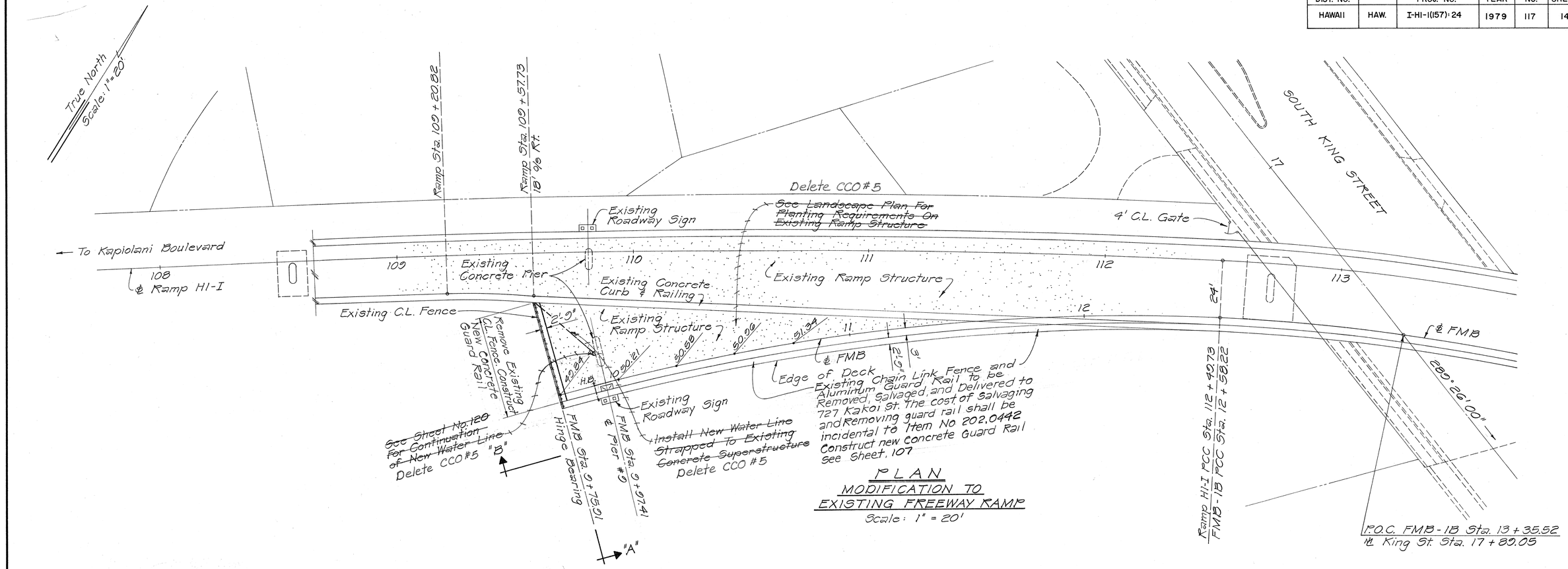

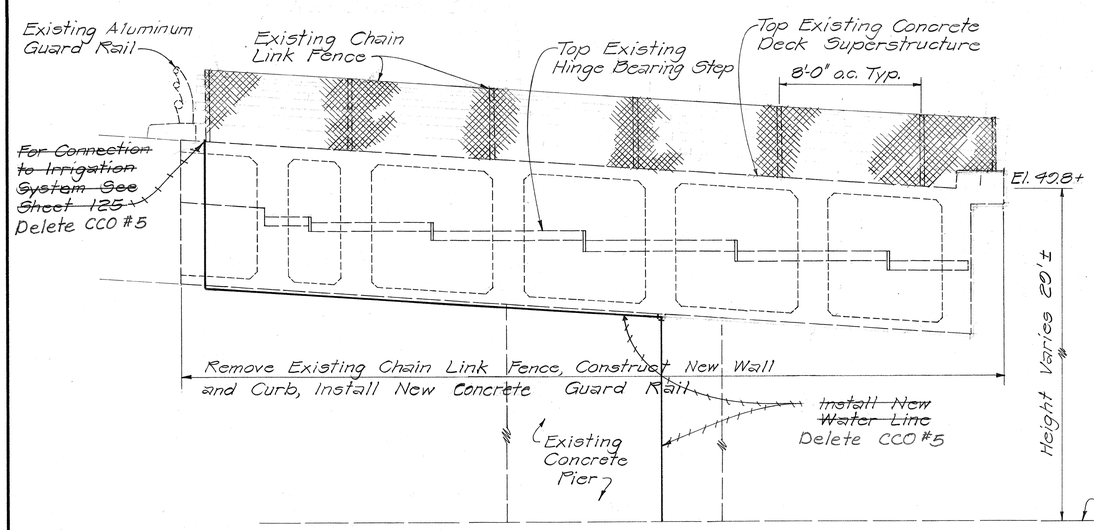

SECTION "A-A"
ELEVATION @ FMB STA. 9 + 75.91
Scale: 1/4" = 1'-0"

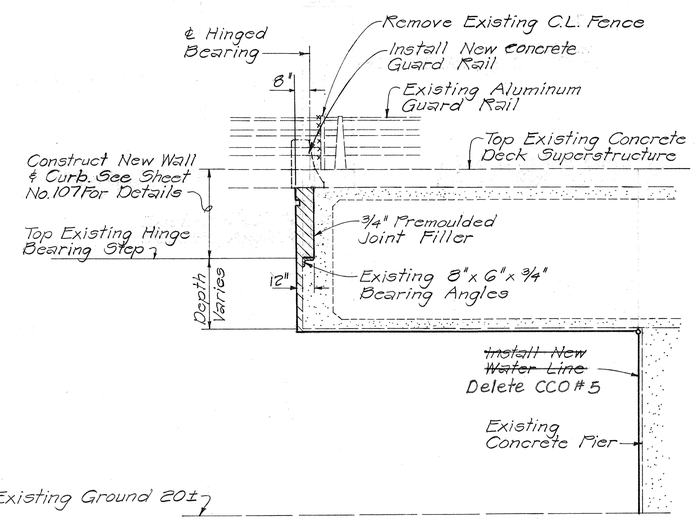

SECTION "B-B"
SIDE ELEVATION @ FMB STA. 9 + 75.91
Scale: 1/4" = 1'-0"

DONALD Y. H. KAM
REGISTERED PROFESSIONAL ENGINEER
No. 2214
HAWAII, U.S.A.

THIS WORK WAS PREPARED BY ME OR UNDER MY SUPERVISION

STATE OF HAWAII
DEPARTMENT OF TRANSPORTATION
LAND TRANSPORTATION FACILITIES DIVISION

EXISTING RAMP MODIFICATIONS

KAPIOLANI OFF-RAMP HI-I
INTERSTATE ROUTE H-I
KAPIOLANI INTERCHANGE ON-RAMP
F.A.I. PROJ. NO. I-HI-I (157): 24

Scale: As Shown Date: 10-15-79

SHEET NO. 1 OF 2 SHEETS

FED. ROAD DIST. NO.	STATE	FED. AID PROJ. NO.	FISCAL YEAR	SHEET NO.	TOTAL SHEETS
HAWAII	HAW.	I-HI-I(157)24	1979	118	146

NOTES:
1. Contractor to verify size of pipe structures to be removed.

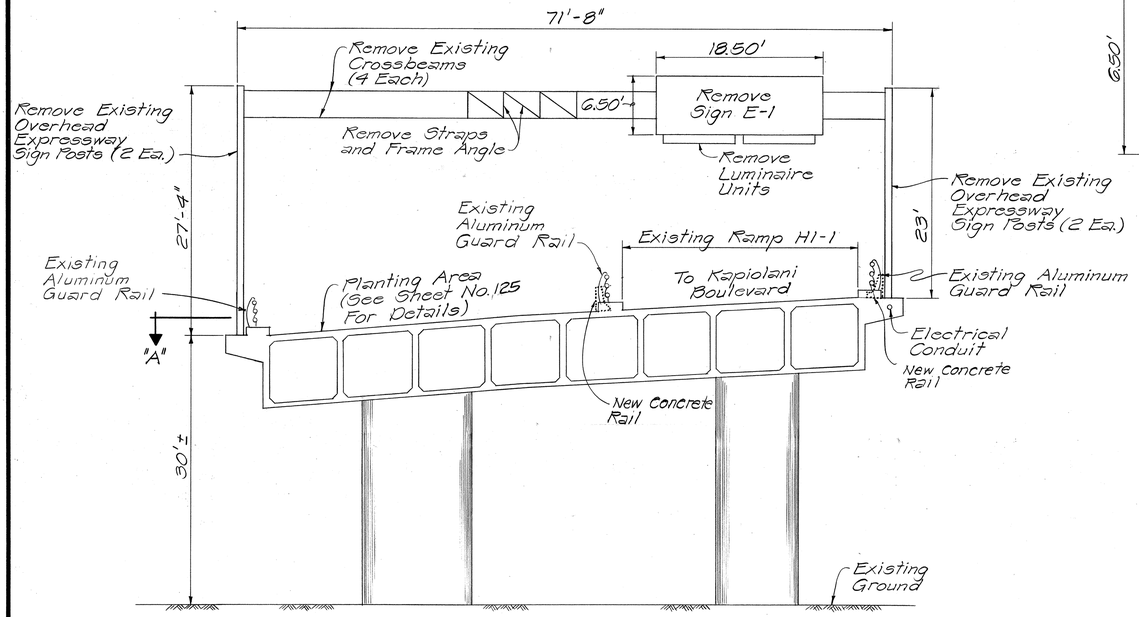

ELEVATION ~ EXISTING RAMP WITH OVERHEAD POSTS STA. 109 + 80.73

Scale: 1/8" = 1'-0"

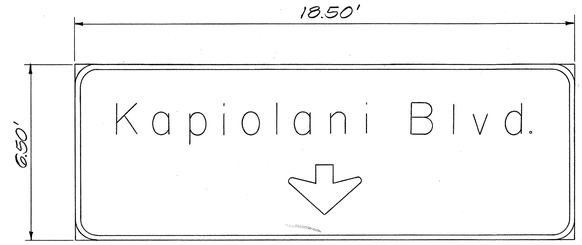

ELEVATION ~ EXISTING SIGN E-1

Scale: 3/8" = 1'-0"

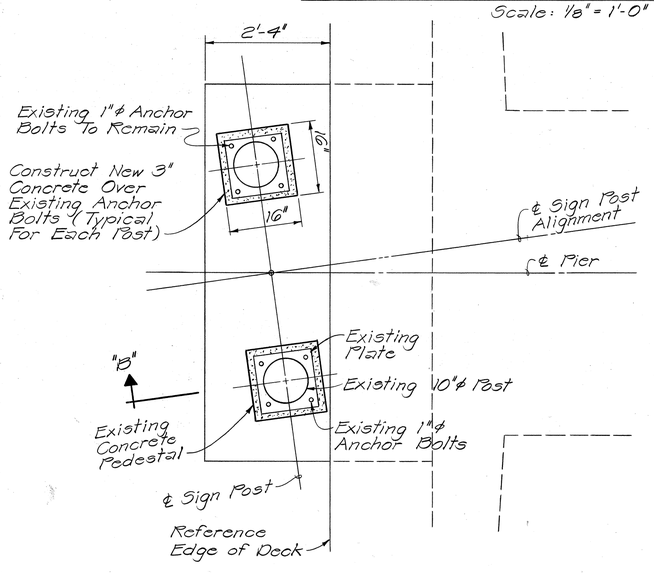

SECTION "A" ~ PLAN
EXISTING SIGN POST BRACKET

Scale: 3/4" = 1'-0"

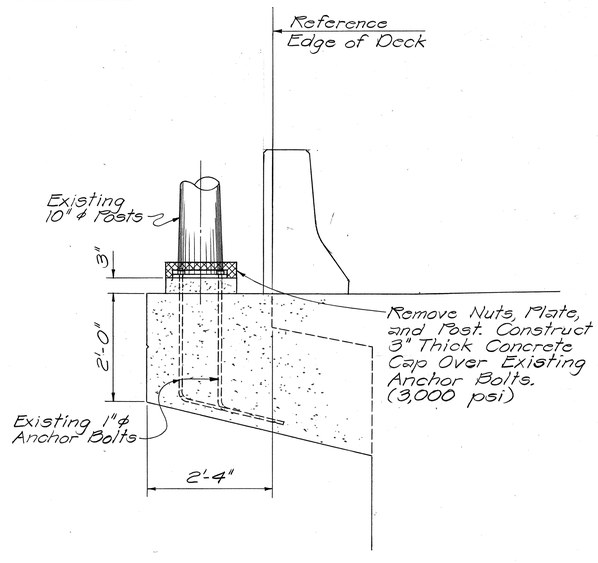

SECTION "B"

Scale: 3/4" = 1'-0"

ORIGINAL PLAN	SURVEY PLOTTED BY	DATE
	DRAWN BY	
	TRACED BY	
NOTE BOOK	DESIGNED BY	
	QUANTITIES BY	
No.	CHECKED BY	

DONALD Y. H. KAM REGISTERED PROFESSIONAL ENGINEER No. 2214 HAWAII, U.S.A.

THIS WORK WAS PREPARED BY ME OR UNDER MY SUPERVISION

Donald Y. H. Kam

STATE OF HAWAII
DEPARTMENT OF TRANSPORTATION
LAND TRANSPORTATION FACILITIES DIVISION

EXISTING RAMP SIGN REMOVAL DETAILS

INTERSTATE ROUTE H-1
KAPIOLANI INTERCHANGE ON-RAMP
F.A.I. PROJ. NO. I-HI-1(157): 24

Scale: As Noted Date: 10-15-79

SHEET No. 2 OF 2 SHEETS