FED. ROAD DIST. NO.	STATE	FED. AID PROJ. NO.	FISCAL YEAR	SHEET NO.	TOTAL SHEETS
HAWAII	HAW.	I-H-1(131):17	1977	173	394

GENERAL UTILITY NOTES (ALL UTILITIES)

1. THE CONTRACTOR SHALL BE LIABLE FOR DAMAGE TO ANY EXISTING UTILITY AND STRUCTURE.

2. THE EXISTENCE AND LOCATION OF UNDERGROUND UTILITIES, APPURTENANCES AND STRUCTURES AS SHOWN ON THE PLANS ARE BASED ON EXISTING RECORDS OF VARYING DEGREES OF ACCURACY AND COMPLETENESS. THEY ARE NOT GUARANTEED AS TO THE LOCATION SHOWN OR THAT OTHER OBSTACLES MAY NOT BE ENCOUNTERED IN THE COURSE OF WORK. THE CONTRACTOR SHALL ASSUME THAT EXISTING UTILITIES MAY EXIST, ALTHOUGH NOT SHOWN.

3. IN ORDER TO AVOID CONFLICTS WITH FUTURE AND PROPOSED IMPROVEMENTS FOR KEEHI INTERCHANGE SUCH AS STRUCTURE FOOTINGS, UTILITIES, DRAINAGE FACILITIES, ETC., THE PROPOSED UTILITY FACILITIES SHALL BE CONSTRUCTED AT THE LOCATIONS SHOWN ON THE PLANS.

4. RESTORATION OF EXISTING PAVEMENTS AND IMPROVEMENTS UNAVOIDABLY DEMOLISHED DUE TO WORK ON UTILITY RECONSTRUCTIONS SHALL BE INCIDENTAL TO THE VARIOUS CONTRACT ITEMS. RESTORATION SHALL BE TO ORIGINAL OR BETTER CONDITION.

5. THE CONTRACTOR SHALL POST A CUSTODIAN DURING PUMPING OPERATIONS. CUSTODIAN MUST BE KNOWLEDGEABLE IN THE OPERATION OF THE PUMP IN USE IN ORDER TO AVOID PROLONGED DELAYS SHOULD THE PUMP MALFUNCTION.

6. THE CONTRACTOR SHALL GIVE ALL PROPERTY OWNERS FIVE (5) DAYS NOTICE BEFORE ENTERING INTO THEIR RESPECTIVE PROPERTIES.

TELEPHONE NOTES
(HAWAIIAN TELEPHONE CO.,)

1. THE CONTRACTOR SHALL GIVE HTCO, IN WRITING, AT LEAST 20 WORKING DAYS ADVANCE NOTICE OF INTENT TO COMMENCE WORK ON THE TELEPHONE SYSTEM.

2. EXISTING TELEPHONE FACILITIES SHOWN ON THESE PLANS ARE APPROXIMATE ONLY. THE CONTRACTOR SHALL VERIFY THEIR ACTUAL LOCATION AND SHALL MAKE ADJUSTMENTS TO THE PROPOSED FACILITY AS DIRECTED BY HTCO.

3. HTCO WILL COORDINATE ITS WORK WITH THE CONTRACTOR IN SUCH A MANNER AS TO EXPEDITE CONSTRUCTION.

4. STAKE-OUT OF NEW DUCTS SHALL BE DONE BY THE CONTRACTOR, AND VERIFIED BY HTCO.

5. ALL SPLICE PITS AND DUCTS SHALL BE INSTALLED BY THE CONTRACTOR.

6. ALL TELEPHONE DUCTS ENCASED IN CONCRETE JACKET UNLESS OTHERWISE SPECIFIED. ALL DUCTS SHALL BE INSPECTED AND APPROVED BY HTCO BEFORE CONCRETE PLACEMENT. ADVANCE NOTICE OF AT LEAST 24 HOURS SHALL BE GIVEN BEFORE PLACING CONCRETE.

7. POLES, ANCHORS, AND CABLES WILL BE REMOVED BY HTCO.

8. HTCO TO FURNISH THE CONTRACTOR FOR PROPER INSTALLATION, ALL MANHOLE FRAMES AND COVERS; ALL PULLING IRONS, AND GROUND RODS; ALL PVC DUCTS AND SPREADERS.

9. THE CONTRACTOR SHALL FURNISH AND INSTALL ALL HARDWARE WITHIN THE BRIDGE STRUCTURE.

GAS NOTES (GASCO, INC.)

1. THE CONTRACTOR SHALL GIVE GASCO, INC., IN WRITING AT LEAST 14 CALENDAR DAYS ADVANCE NOTICE OF INTENT TO COMMENCE WORK ON THE GAS SYSTEM.

2. THE CONTRACTOR SHALL VERIFY THE EXACT LOCATIONS AND DEPTHS OF EXISTING GAS LINES PRIOR TO START OF CONSTRUCTION OPERATIONS. THE CONTRACTOR SHALL CALL GASCO, INC. A MINIMUM OF 48 HOURS BEFORE STARTING EXCAVATION TO ARRANGE FOR FIELD LOCATION OF ALL EXISTING GAS PIPE LINES. THE TELEPHONE NUMBER IS 548-2126 DURING BUSINESS HOURS, AND 548-2123 AFTER HOURS.
THE CONTRACTOR SHALL EXCAVATE AND BACKFILL AROUND GAS PIPE LINES IN THE PRESENCE OF A GASCO, INC. REPRESENTATIVE. ALL BACKFILL WITHIN SIX INCHES OF GAS LINE SHALL BE SELECT CUSHION MATERIAL APPROVED BY GASCO, INC.

3. FOR RELOCATION OF ANY GAS PIPE LINE, THE CONTRACTOR SHALL NOTIFY GASCO, INC. 5 WORKING DAYS BEFORE STARTING WORK. THE CONTRACTOR SHALL PROVIDE THE NECESSARY EXCAVATION AND BACKFILL, ARRANGE FOR TRAFFIC PERMITS AND RESTORE SIDEWALK PAVEMENT OR OTHER IMPROVEMENTS. THE CONTRACTOR SHALL PERFORM ALL NECESSARY EXCAVATION FOR NEW GAS LINES UNTIL THE NEW LINES ARE IN SERVICE.

4. THE CONTRACTOR SHALL FURNISH ALL MATERIALS, LABOR AND EQUIPMENT FOR PERFORMING ALL NECESSARY EXCAVATION, BACKFILL, AND CONCRETE WORK NECESSARY FOR THE INSTALLATION OF NEW GAS PIPES IN TRENCH AND ADJUSTMENTS TO EXISTING GAS PIPES AND APPURTENANCES. GASCO WILL PROVIDE ALL MATERIALS, LABOR AND EQUIPMENT FOR THE INSTALLATION OF THE GAS LINE IN TRENCHES, INCLUDING FABRICATION, WELDING, AND TESTING.

5. EXISTING FRAME AND COVER FROM THE RECONSTRUCTED GASCO BLOCK VALVE STRUCTURE SHALL BE SALVAGED, CLEANED AND DELIVERED BY THE CONTRACTOR TO:
GAS COMPANY SALES/DISTRIBUTION,
515 KAMAKEE STREET
ATTN: MR. YUKIO HARAMOTO OR MR. GEORGE FUJITA

6. THE GASCO, INC. GAS PIPE LINES IN THE PROJECT AREA ARE PLASTIC COATED AND CATHODICALLY PROTECTED. THE CONTRACTOR SHALL BE EXTREMELY CAREFUL WHEN WORKING NEAR THESE GAS PIPE LINES.

7. THE CONTRACTOR SHALL NOTIFY GASCO, INC. IMMEDIATELY AFTER ANY DAMAGE HAS BEEN CAUSED TO EXISTING GAS PIPELINES, THEIR COATINGS OR THEIR CATHODIC PROTECTION DEVICES. REPAIR WORK ON THIS DAMAGE WILL BE DONE BY GASCO, INC. WITH PAYMENT FOR THIS WORK TO BE BORNE BY THE CONTRACTOR.

8. MINIMUM VERTICAL OR HORIZONTAL CLEARANCE BETWEEN GAS PIPE LINES AND OTHER PIPELINES, CONDUITS, OR DUCTLINES SHALL BE 12 INCHES. ADEQUATE SUPPORT AND PROTECTION FOR GAS PIPE LINES EXPOSED IN THE TRENCH SHALL BE PROVIDED. SUCH SUPPORT AND PROTECTION WILL BE APPROVED BY GASCO, INC. IF THIS CLEARANCE CANNOT BE ATTAINED, THE GAS LINE SHALL BE PROTECTED WITH A GASCO, INC. - APPROVED INSULATION MATERIAL FURNISHED AND INSTALLED BY THE CONTRACTOR, AND THE WORK MUST BE APPROVED BY GASCO, INC.

9. THE CONTRACTOR SHALL WORK IN AN EXPEDITIOUS MANNER IN ORDER TO KEEP UNCOVERED GAS PIPE LINES EXPOSED FOR AS SHORT A PERIOD OF TIME AS POSSIBLE.

ELECTRIC NOTES (HAWAIIAN ELECTRIC CO., INC.)

1. THE CONTRACTOR SHALL GIVE HECO IN WRITING AT LEAST 20 WORKING DAYS ADVANCE NOTICE OF INTENT TO COMMENCE WORK ON THE ELECTRICAL SYSTEM.

2. ALL EXISTING FACILITIES SHALL REMAIN IN PLACE UNTIL THE PROPOSED FACILITIES ARE INSTALLED. EXISTING ELECTRIC FACILITIES SHOWN ON THESE PLANS ARE APPROXIMATE ONLY. THE CONTRACTOR SHALL VERIFY THEIR ACTUAL LOCATIONS AND SHALL MAKE ADJUSTMENTS TO THE PROPOSED FACILITY AS DIRECTED BY HECO.

3. HECO WILL COORDINATE ITS WORK WITH THE CONTRACTOR IN SUCH A MANNER AS TO EXPEDITE CONSTRUCTION.

4. ALL MATERIALS REQUIRED FOR THE RELOCATION AND REARRANGEMENT OF THE HECO'S OVERHEAD FACILITIES WILL BE FURNISHED BY HECO.

5. THE CONTRACTOR SHALL FURNISH AND INSTALL ALL MATERIALS TO COMPLETE CONSTRUCTION OF THE UNDERGROUND DUCTLINE SYSTEM, INCLUDING RISER CONDUITS. ALL ELECTRIC DUCTS SHALL BE ENCASED IN CONCRETE JACKET UNLESS OTHERWISE SPECIFIED. ALL DUCTS AND CONDUITS SHALL BE INSPECTED AND APPROVED BY HECO PRIOR TO PLACING CONCRETE. THE CONTRACTOR SHALL NOTIFY HECO'S INSPECTION DIVISION (PHONE 548-4428) AT LEAST 24 HOURS PRIOR TO PLACING CONCRETE.

6. LOCATION AND DEPTH OF ALL HANDHOLES AND SWITCH MANHOLES SHALL BE VERIFIED AND APPROVED IN THE FIELD BY HECO PRIOR TO EXCAVATION, CONSTRUCTION OR INSTALLATION.

7. THE CONTRACTOR IS TO MANDREL TEST ALL DUCTLINES IN THE PRESENCE OF HECO'S INSPECTOR PRIOR TO ACCEPTANCE.

8. EXCAVATION OF POLE HOLES AND ANCHORS, INSTALLATION OF POLES AND ANCHORS, AND BACKFILL OF POLE HOLES AND ANCHORS WILL BE DONE BY HECO. STAKE OUT OF WOOD POLE AND ANCHOR LOCATIONS TO BE DONE BY THE CONTRACTOR AND VERIFIED BY HECO.

9. ELECTRIC DUCT BANKS SHALL ENTER AND LEAVE MANHOLES AT ZERO PERCENT SLOPE FOR A MINIMUM DISTANCE OF TEN FEET, UNLESS OTHERWISE SPECIFIED.

10. FOR ANCHOR STAKE OUT DETAILS SEE HECO PROJECT DWG. NO. ~~24143~~ 24859 & 24861
HECO TO PROVIDE CONTRACTOR WITH HECO PROJECT DWG. NO. ~~24143~~ 24859 & 24861

11. THE CONTRACTOR SHALL FURNISH AND INSTALL ALL MATERIALS TO COMPLETE CONSTRUCTION OF PVC DUCTS INSTALLED ON BRIDGES.

WERNER BEUGGERT
REGISTERED PROFESSIONAL ENGINEER
No. 3383-E
HAWAII, U.S.A.

THIS WORK WAS PREPARED BY ME OR UNDER MY SUPERVISION.
Werner Beuggert

APPROVED:

K. Yoshihara — 8-15-77
Hawaiian Telephone Co., — Date

S. Karimoto — 8/10/77
Hawaiian Electric Co., Inc. — Date

Chuck Imy — 8/10/77
Gasco, Inc. — Date

STATE OF HAWAII
DEPARTMENT OF TRANSPORTATION
HIGHWAYS DIVISION

GENERAL UTILITY NOTES

INTERSTATE ROUTE H-1
PROJECT NO. 1-H1-1(131):17

NO SCALE DATE: AUG. 31, 1977

SHEET NO. U-1 OF U-23 SHEETS

173

ORIGINAL PLAN | SURVEY PLOTTED BY | DRAWN BY | TRACED BY | DESIGNED BY | QUANTITIES BY | CHECKED BY | DATE | NOTE BOOK | NO.

PRINTED ON NO. 1000H CLEARPRINT

FED. ROAD DIST. NO.	STATE	FED. AID PROJ. NO.	FISCAL YEAR	SHEET NO.	TOTAL SHEETS
HAWAII	HAW.	I-HI-1(131):17	1977	174	394

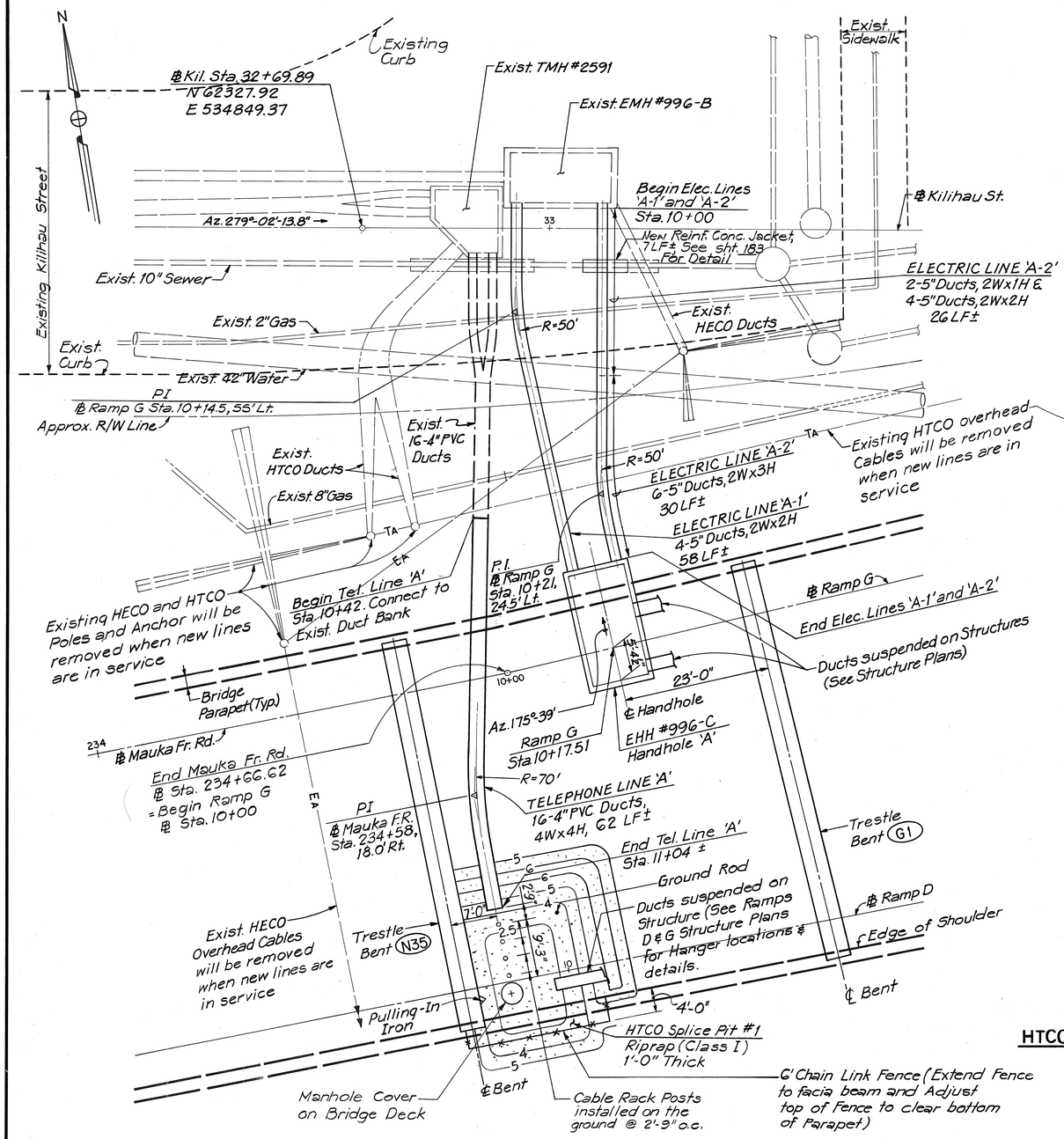

PLAN DETAIL AT HTCO SPLICE PIT #1 & EHH #996-C

SCALE: 1" = 10'

NOTE: For Cable Rack Post Detail, see sheet No. 188

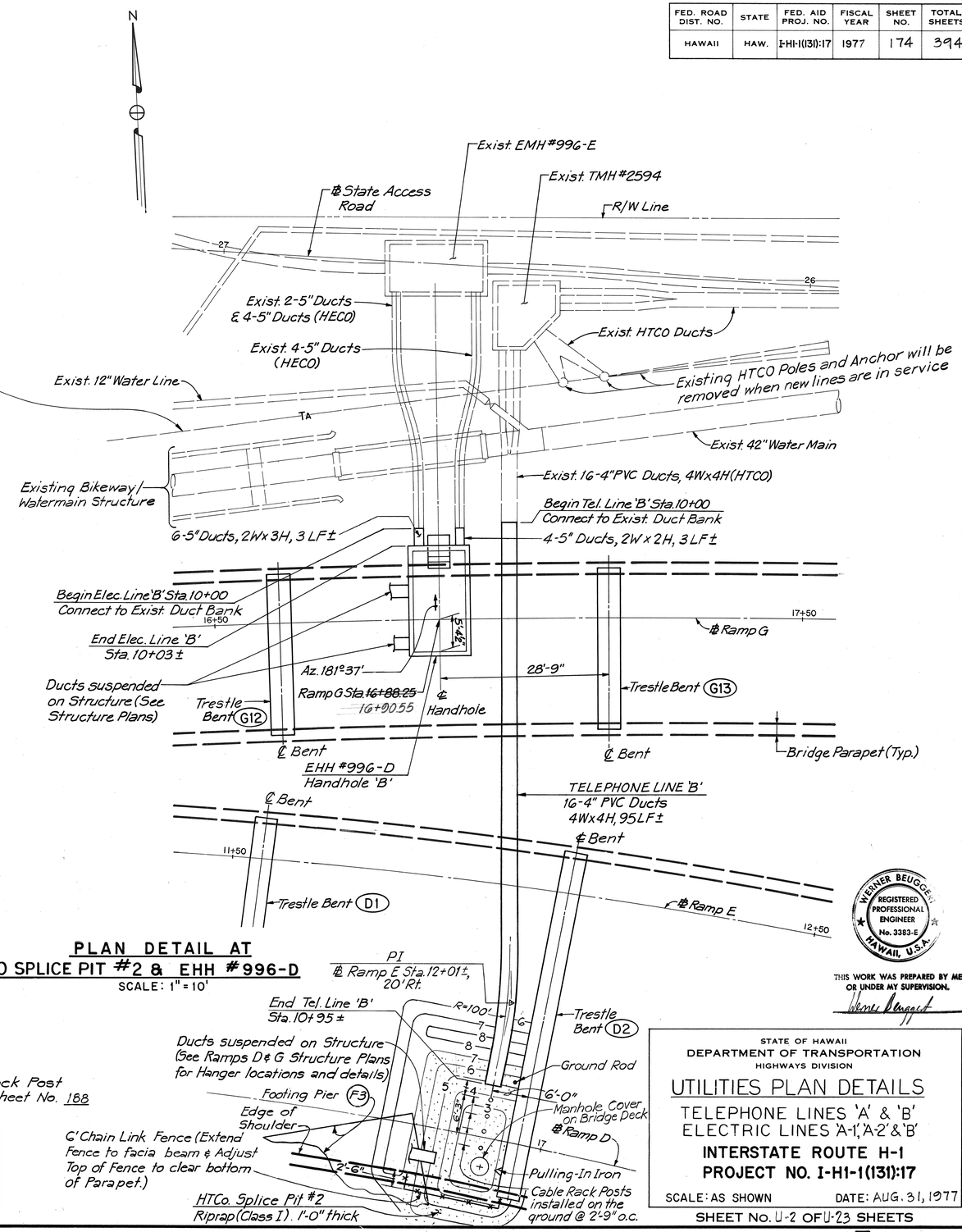

PLAN DETAIL AT HTCO SPLICE PIT #2 & EHH #996-D

SCALE: 1" = 10'

WERNER BEUGGER REGISTERED PROFESSIONAL ENGINEER No. 3383-E HAWAII, U.S.A.

THIS WORK WAS PREPARED BY ME OR UNDER MY SUPERVISION.

Werner Beugger

APPROVED:

HAWAIIAN ELECTRIC CO., INC.	8/10/77 DATE
HAWAIIAN TELEPHONE CO.	8-15-77 DATE

STATE OF HAWAII
DEPARTMENT OF TRANSPORTATION
HIGHWAYS DIVISION

UTILITIES PLAN DETAILS

TELEPHONE LINES 'A' & 'B'
ELECTRIC LINES 'A-1', 'A-2' & 'B'

INTERSTATE ROUTE H-1
PROJECT NO. I-H1-1(131):17

SCALE: AS SHOWN DATE: AUG. 31, 1977

SHEET No. U-2 OF U-23 SHEETS

ORIGINAL PLAN | SURVEY PLOTTED BY | DRAWN BY | TRACED BY | DESIGNED BY | QUANTITIES BY | CHECKED BY | NOTE BOOK | No. | DATE

FED. ROAD DIST. NO.	STATE	FED. AID PROJ. NO.	FISCAL YEAR	SHEET NO.	TOTAL SHEETS
HAWAII	HAW.	I-HI-1(131):17	1977	175	394

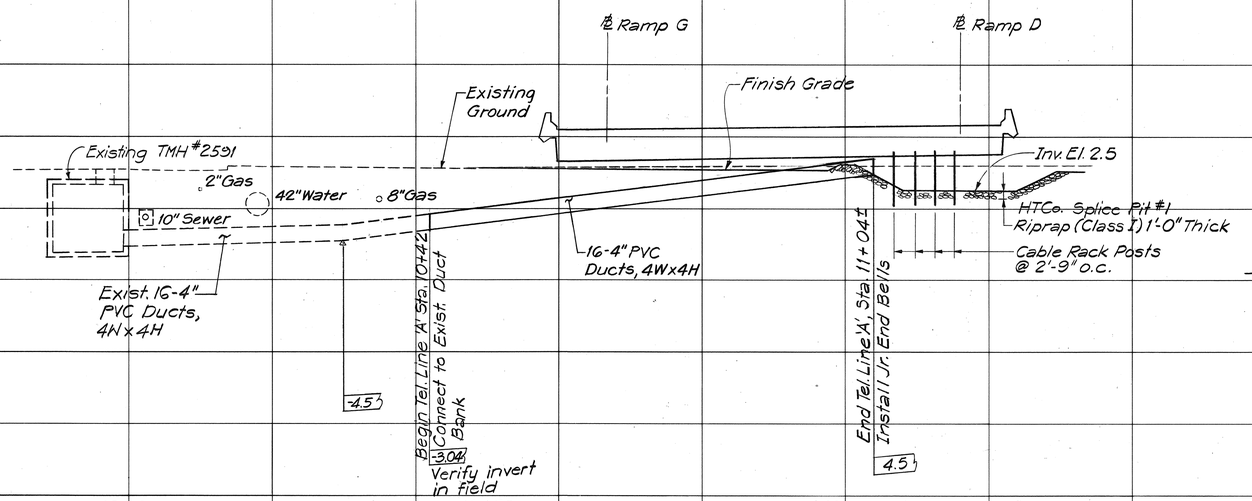

PROFILE-TELEPHONE LINE 'A'

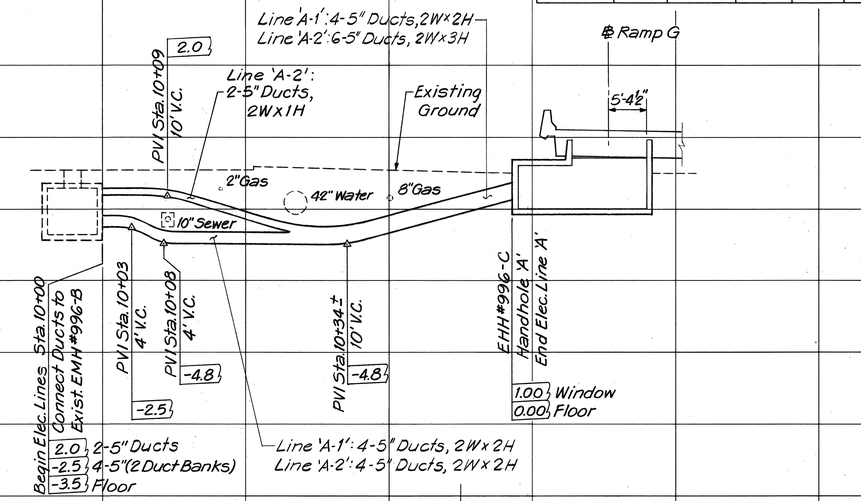

PROFILE-ELECTRIC LINES 'A-1' & 'A-2'

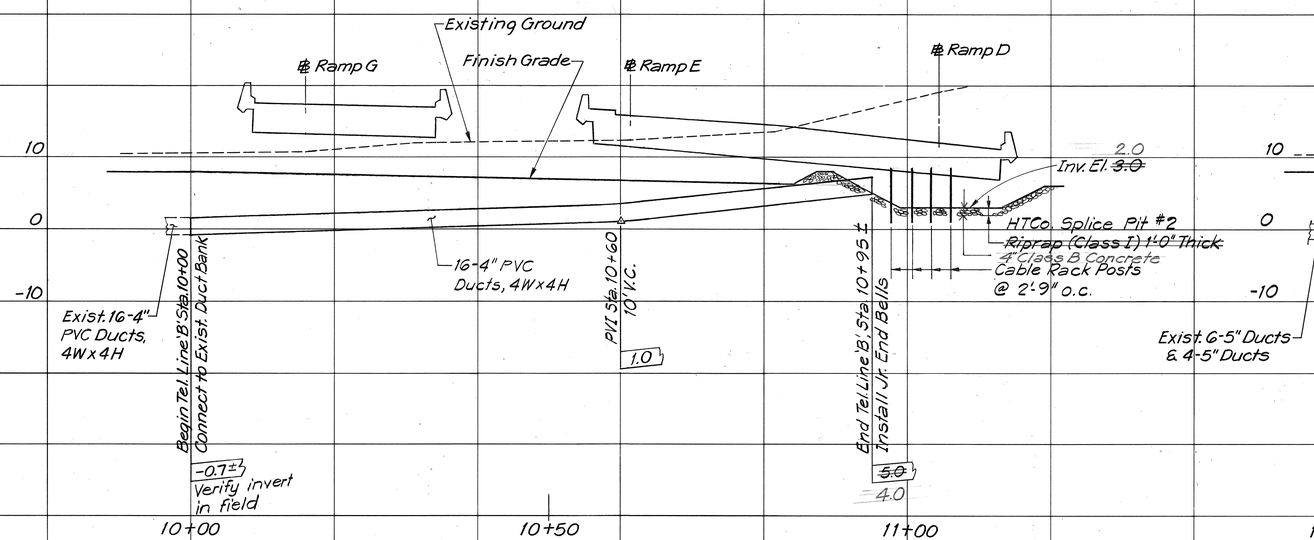

PROFILE-TELEPHONE LINE 'B'

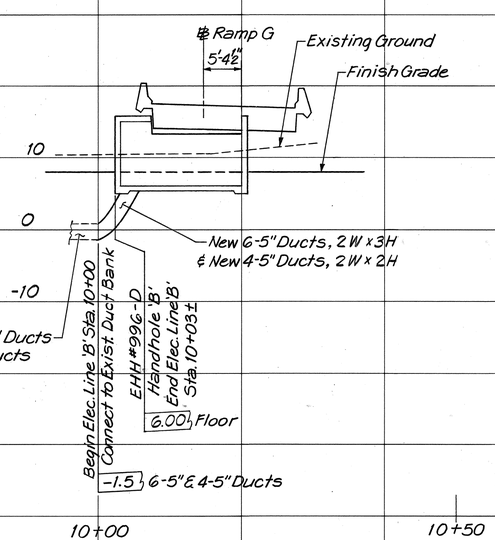

PROFILE-ELECTRIC LINE 'B'

APPROVED:

B. Goldhaber — 8-15-77
HAWAIIAN TELEPHONE CO. — DATE

Aug. F. Kawamoto — 8/10/77
HAWAIIAN ELECTRIC CO., INC. — DATE

WERNER BEUGGERT REGISTERED PROFESSIONAL ENGINEER No. 3383-E HAWAII, U.S.A.

THIS WORK WAS PREPARED BY ME OR UNDER MY SUPERVISION.

Werner Beuggert

STATE OF HAWAII
DEPARTMENT OF TRANSPORTATION
HIGHWAYS DIVISION

UTILITIES PROFILES
TELEPHONE LINES 'A' & 'B'
ELECTRIC LINES 'A-1', 'A-2' & 'B'

INTERSTATE ROUTE H-1
PROJECT NO. I-HI-1(131):17

SCALE: HORIZ.: 1" = 10' VERTICAL: 1" = 10'
DATE: AUG. 31, 1977

SHEET No. U-3 OF U-23 SHEETS

ORIGINAL PLAN — SURVEY PLOTTED BY — DRAWN BY — TRACED BY — DESIGNED BY — QUANTITIES BY — CHECKED BY — DATE — NOTE BOOK No.

FED. ROAD DIST. NO.	STATE	FED. AID PROJ. NO.	FISCAL YEAR	SHEET NO.	TOTAL SHEETS
HAWAII	HAW.	I-H1-1(131)17	1977	176	394

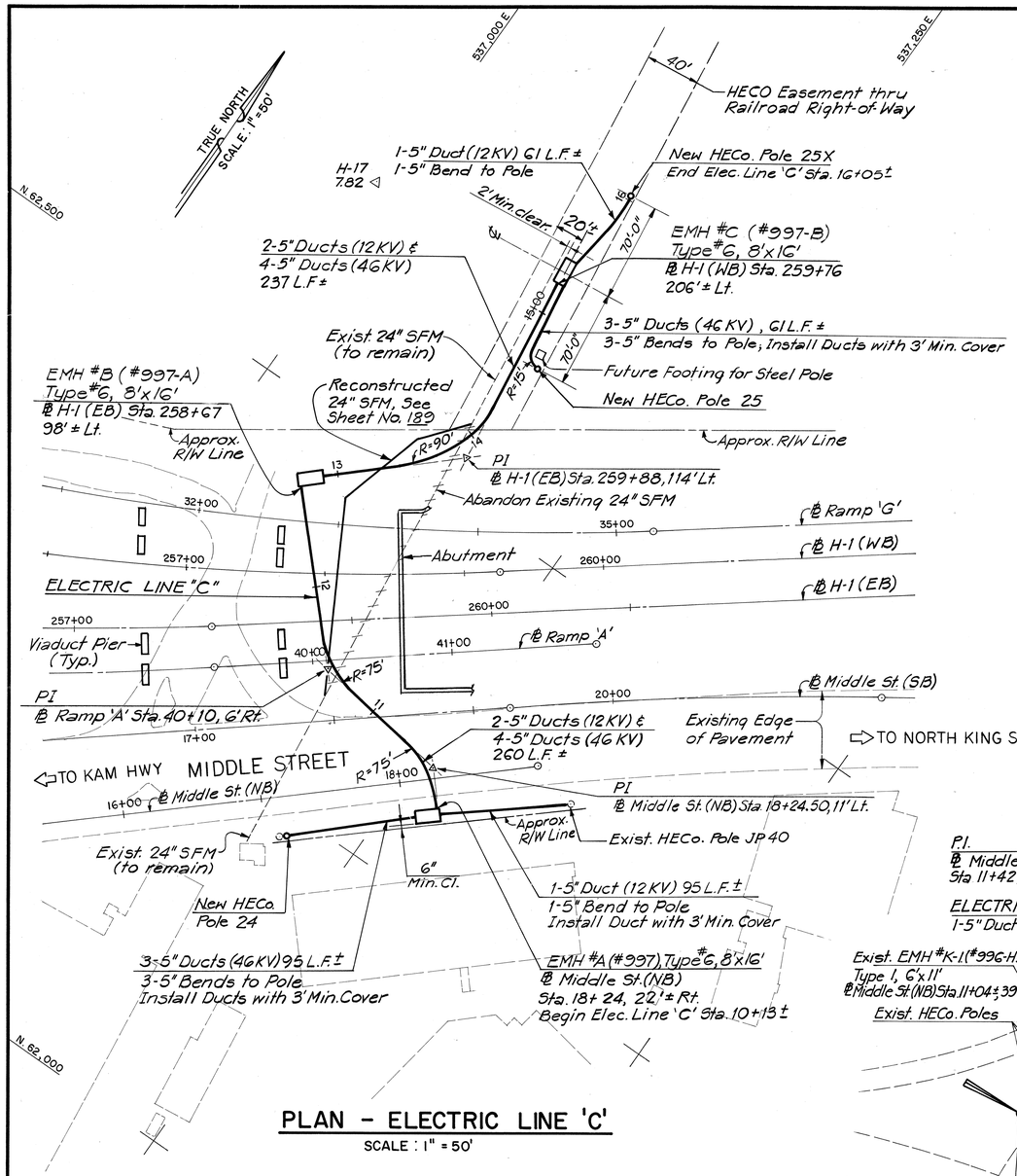

PLAN - ELECTRIC LINE 'C'

SCALE: 1" = 50'

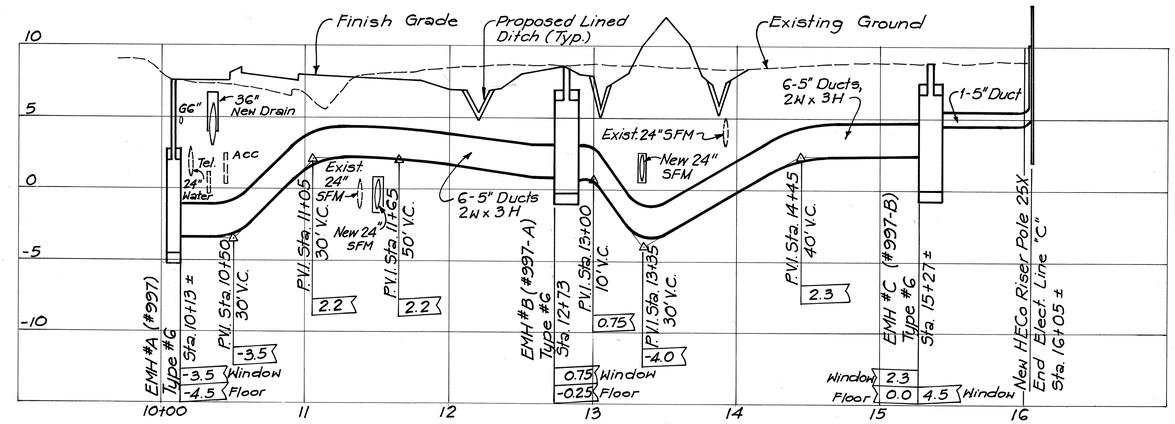

PROFILE - ELECTRIC LINE 'C'

SCALE: HORIZ. 1" = 50'
VERT. 1" = 5'

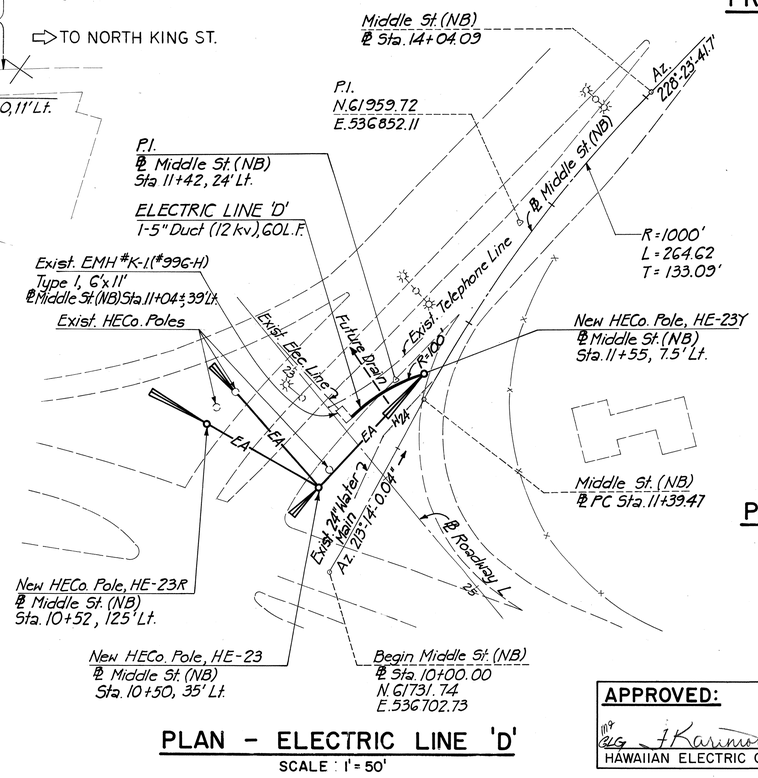

PLAN - ELECTRIC LINE 'D'

SCALE: 1" = 50'

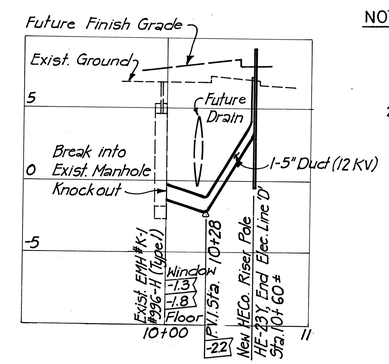

PROFILE - ELECTRIC LINE 'D'

SCALE: HORIZ. 1" = 50'
VERT. 1" = 5'

NOTES:

1. Offsets shown are measured from the baseline to the outer face of the manhole wall.
2. For existing utility facilities see Sheet No. 193 & 194

ORIGINAL PLAN	SURVEY PLOTTED BY	DATE
	DRAWN BY	
	TRACED BY	
NOTE BOOK	DESIGNED BY	
	QUANTITIES BY	
No.	CHECKED BY	

APPROVED:

HAWAIIAN ELECTRIC CO., INC. — DATE 8/10/77

WERNER BEUGGERT REGISTERED PROFESSIONAL ENGINEER No. 3383-E HAWAII, U.S.A.

THIS WORK WAS PREPARED BY ME OR UNDER MY SUPERVISION.

STATE OF HAWAII
DEPARTMENT OF TRANSPORTATION
HIGHWAYS DIVISION

PLAN AND PROFILE OF ELECTRIC LINE 'C' & 'D'

INTERSTATE ROUTE H-1
PROJECT NO. I-H1-1(131)17

SCALE: AS SHOWN — DATE: AUG. 31, 1977

SHEET No. U-4 OF U-23 SHEETS

FED. ROAD DIST. NO.	STATE	FED. AID PROJ. NO.	FISCAL YEAR	SHEET NO.	TOTAL SHEETS
HAWAII	HAW.	I-H1-1(131):17	1977	177	394

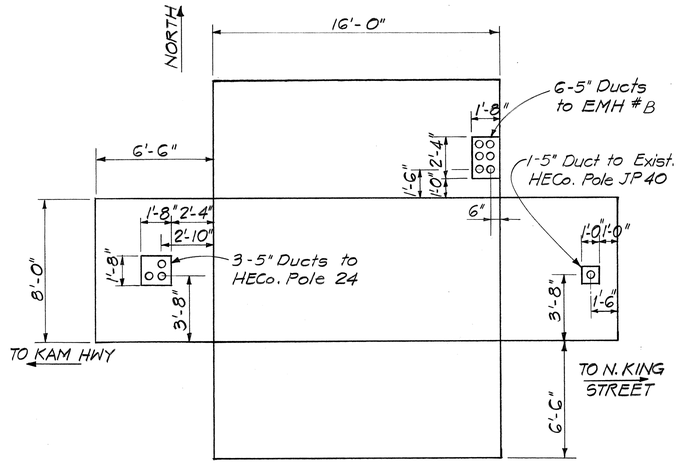

EMH #A, TYPE #6
(#997)

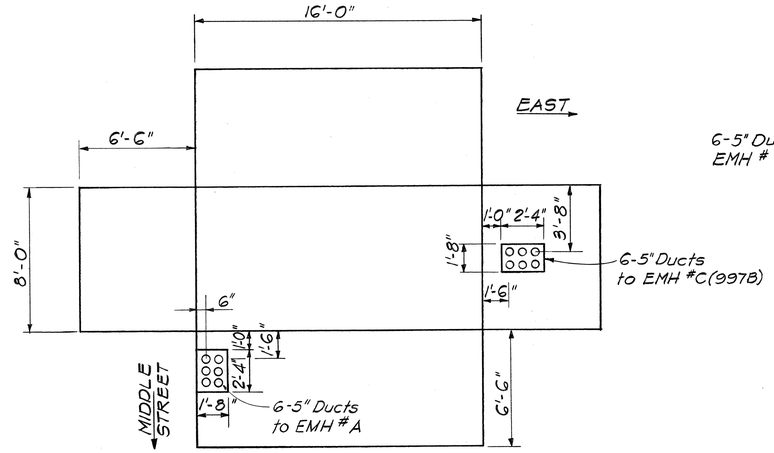

EMH #B, TYPE #6
(#997-A)

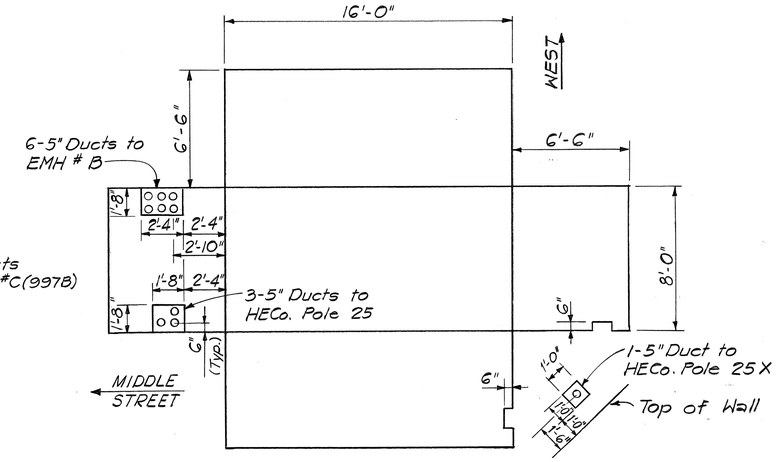

EMH #C, TYPE #6
(#997-B)

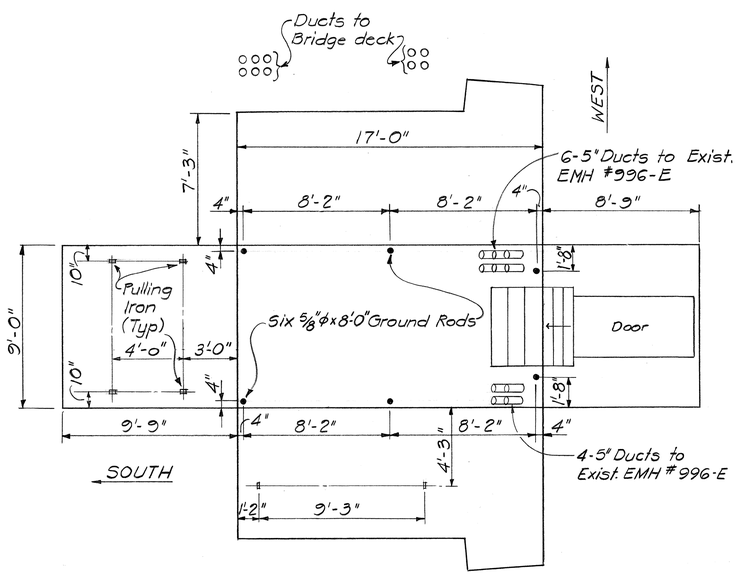

EHH #996-D
(HANDHOLE 'B')

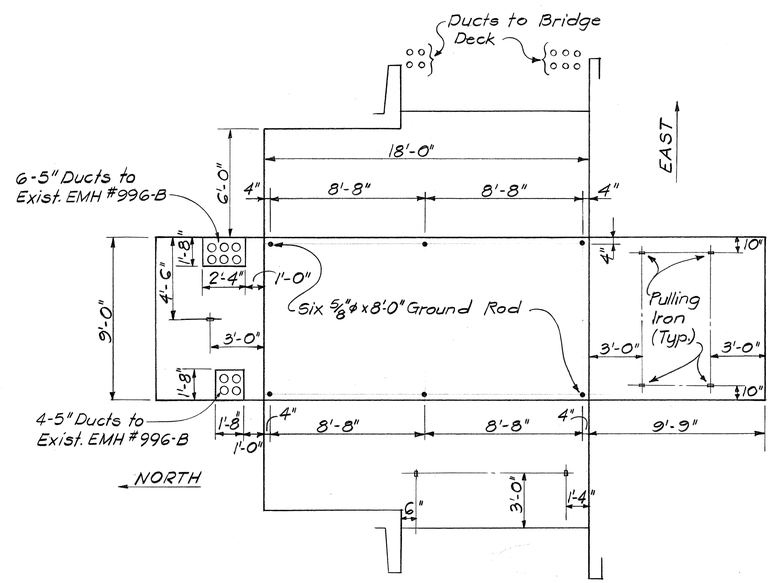

EHH #996-C
(HANDHOLE 'A')

APPROVED

Hawaiian Electric Co. Inc. 8/10/77
Date

WERNER BEUGGERT REGISTERED PROFESSIONAL ENGINEER No. 3383-E HAWAII, U.S.A.

THIS WORK WAS PREPARED BY ME OR UNDER MY SUPERVISION.

STATE OF HAWAII
DEPARTMENT OF TRANSPORTATION
HIGHWAYS DIVISION

MANHOLE WALL ELEVATIONS ELECTRIC

INTERSTATE ROUTE H-1
PROJECT NO. I-HI-1 (131): 17

SCALE: 1/4" = 1'-0" DATE: AUG. 31, 1977

SHEET No. U-5 OF U-23 SHEETS

ORIGINAL PLAN | SURVEY PLOTTED BY | DRAWN BY | TRACED BY | DESIGNED BY | QUANTITIES BY | CHECKED BY | DATE | NOTE BOOK | No.

FED. ROAD DIST. NO.	STATE	FED. AID PROJ. NO.	FISCAL YEAR	SHEET NO.	TOTAL SHEETS
HAWAII	HAW.	I-H1-1(131):17	1977	178	394

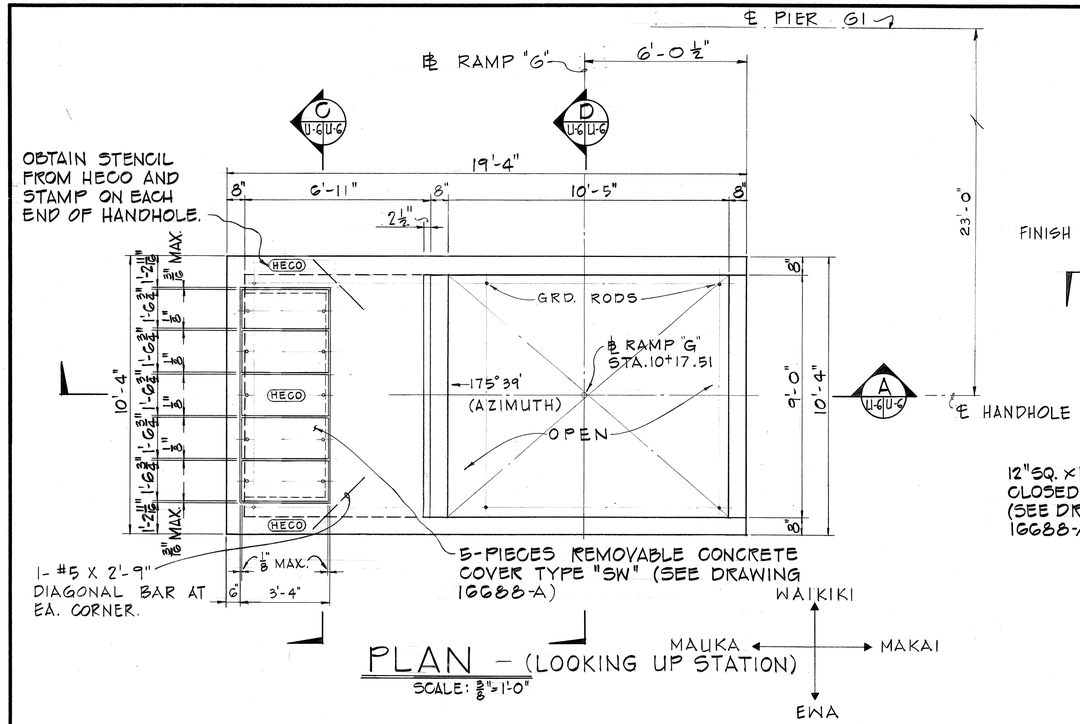

PLAN – (LOOKING UP STATION)
SCALE: 3/8" = 1'-0"

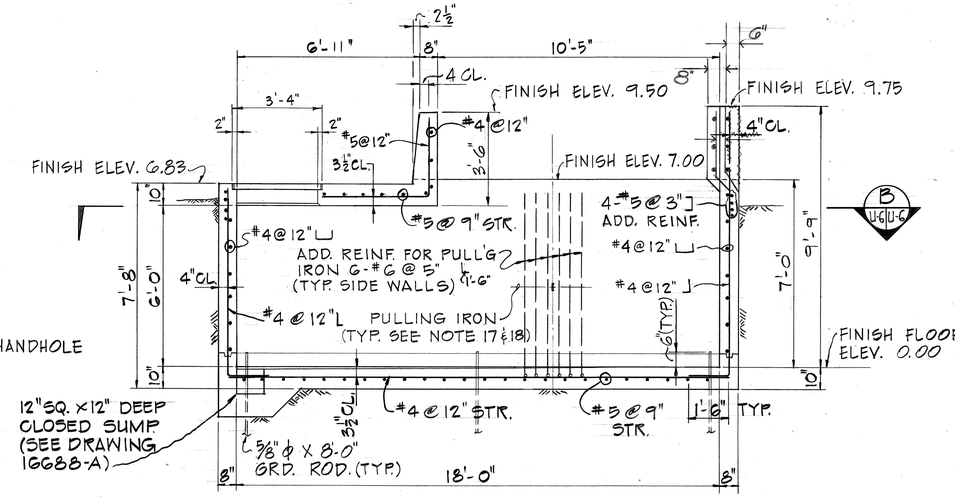

SECTION A
SCALE: 3/8" = 1'-0"

GENERAL NOTES

1. SPECIFICATION FOR CONSTRUCTION OF UNDERGROUND FACILITIES, CS7001, SHALL GOVERN.
2. EXCAVATIONS: EXCAVATE FOR HANDHOLE TO ACCURATE ALIGNMENT, GRADES AND DIMENSIONS AS SHOWN ON DRAWINGS. ALL EXCAVATION MUST BE APPROVED BY THE ENGINEERING DEPT., HECO, BEFORE ANY CONCRETE IS POURED. ALL OVEREXCAVATION SHALL BE FILLED WITH CONCRETE USED FOR THE HANDHOLE OR BACK-FILLED WITH COMPACTED SELECTED MATERIAL AS DIRECTED BY THE ENGINEER (HECO).
3. BACKFILL: REMOVE ALL DEBRIS BEFORE BACKFILLING. BACKFILL IN ACCORDANCE WITH LATEST SPECIFICATIONS OF DIVISION OF HIGHWAYS, STATE OF HAWAII.
4. ALL WORK TO BE DONE IN DRY.
5. CONCRETE COMPRESSIVE STRENGTH - 3000 PSI IN 28 DAYS.
6. MIXING: READY MIXED A.S.T.M., C-94.
7. REINFORCING: ROUND DEFORMED BARS, (CLEAN & NEW).
8. SPLICE IN ACCORDANCE WITH LATEST AASHTO STANDARDS.
9. CURING: KEEP CONCRETE MOIST AT LEAST 7 DAYS AFTER POURING (BY APPROVED METHOD).
10. FINISH: ALL SURFACES SMOOTH AND FREE FROM DEFECTS.
    TOP OF HANDHOLE - WOOD FLOATED
    HANDHOLE FLOOR - STEEL TROWELLED
    INSIDE WALLS & CEILING - CEMENT WASHED
11. INSTALL ALL INSERTS, INCLUDING PULLING IRONS, GROUND RODS, ETC., BEFORE POURING CONCRETE.
12. POURING: NOTIFY THE HECO CONTRACTING & INSPECTION DIVISION, PH. 548-4427 OR 548-4428, 24 HOURS BEFORE POURING ANY CONCRETE. ALL CONCRETE POURING SHALL BE DONE IN THE PRESENCE OF AN HECO ENGINEER OR INSPECTOR.
13. FORMS: MADE OF GOOD SOUND LUMBER OF SUFFICIENT STRENGTH, WATER TIGHT AND CONFORMING TO SHAPE AND DIMENSIONS INDICATED ON DRAWINGS.
14. SLOPE HANDHOLE FLOOR DRAIN 1" TOWARDS SUMP.
15. ALL WORK SHALL BE SUBJECT TO INSPECTION BY THE HAWAIIAN ELECTRIC CO., INC. AND DIVISION OF HIGHWAYS, STATE OF HAWAII.
16. ALL MATERIALS SHALL BE NEW AND MANUFACTURED IN THE UNITED STATES OF AMERICA.
17. SEE HANDHOLE WALL ELEVATION DRAWINGS FOR NUMBER, SIZE AND LOCATION OF DUCT ENTRANCES AND PULLING IRONS ~~(HECO DWG. NO. 24870)~~ SHEET U-5.
18. FOR MISCELLANEOUS HANDHOLE DETAILS, REFER TO HECO DWG. 16688A (SHEETS 1 & 2).

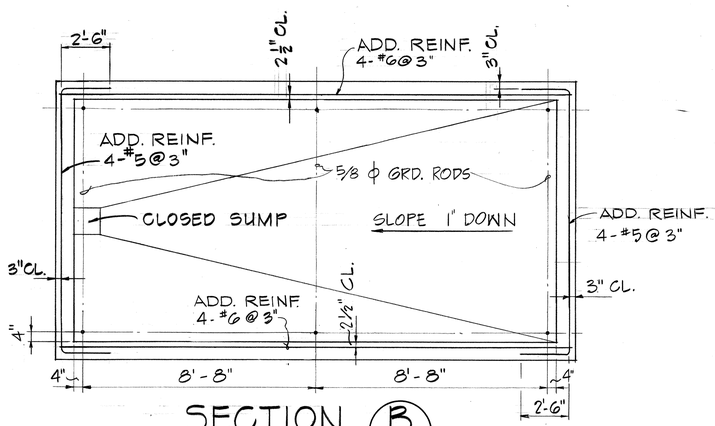

SECTION B
SCALE: 3/8" = 1'-0"

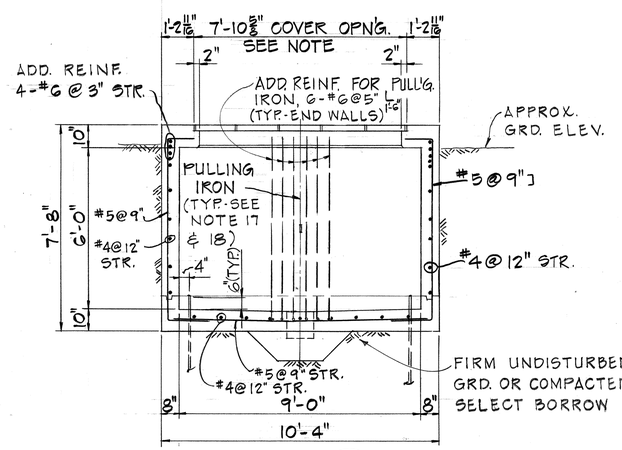

SECTION C
SCALE: 3/8" = 1'-0"

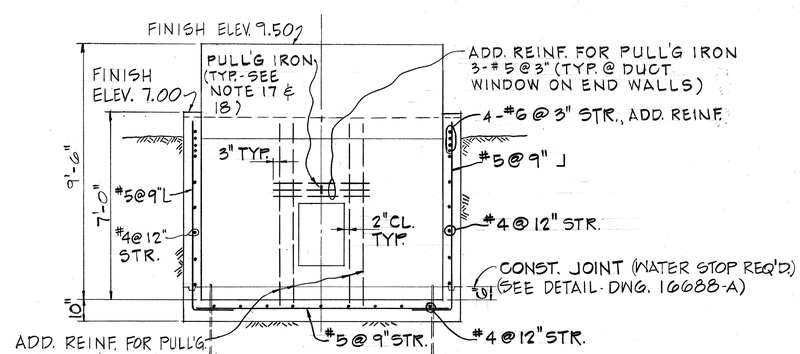

SECTION D
SCALE: 3/8" = 1'-0"

QUANTITY OF MATERIALS

CONCRETE	19.5 CU. YD.
REINFORCING	1663.5 LBS.
REINFORCING - ADDITIONAL (PULLING IRON ONLY-EA.)	90 LBS.
MISCELLANEOUS STEEL (PULLING IRON ONLY)	10.9 LBS.

STANLEY H. TANIGO REGISTERED PROFESSIONAL ENGINEER No. 1927 HAWAII, U.S.A.

THIS WORK WAS PREPARED BY ME OR UNDER MY SUPERVISION.
Stanley H. Tanigo 6/2/77

APPROVED	DATE
for ST HK Stewart Jr CIVIL-STRUCTURAL	6-3-77
ELECTRICAL	6-7-77

HAWAIIAN ELECTRIC COMPANY, INC.

HECO, INC. DRAWING NUMBER
23349

STATE OF HAWAII
DEPARTMENT OF TRANSPORTATION
HIGHWAYS DIVISION

ELECTRIC HANDHOLE 'A'

INTERSTATE ROUTE H-1
PROJECT NO. I-H1-1(131):17

SCALE: AS NOTED DATE: AUG. 31, 77

SHEET No. U-6 OF U-23 SHEETS

ORIGINAL PLAN | SURVEY PLOTTED BY | DRAWN BY | TRACED BY | DESIGNED BY | QUANTITIES BY | CHECKED BY | DATE | NOTE BOOK | No.

FED. ROAD DIST. NO.	STATE	FED. AID PROJ. NO.	FISCAL YEAR	SHEET NO.	TOTAL SHEETS
HAWAII	HAW.	I-H1-1(131):17	1977	179	394

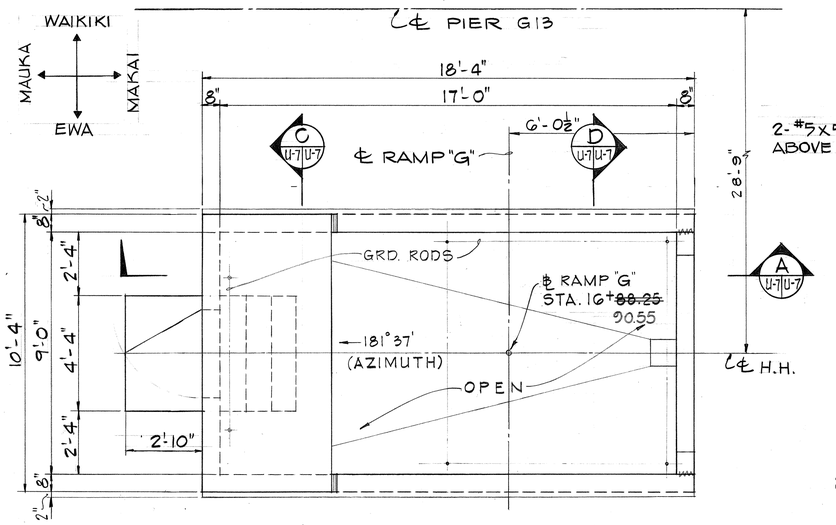

PLAN - (LOOKING UP STATION)
SCALE: 3/8"=1'-0"

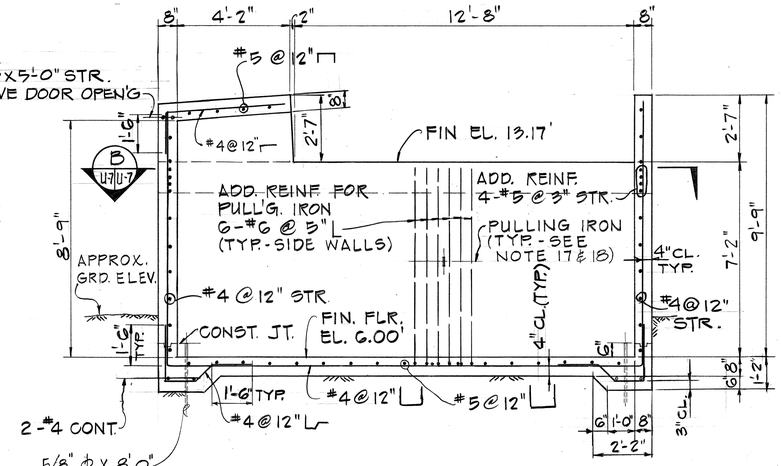

SECTION A U-7 U-7
SCALE: 3/8"=1'-0"

GENERAL NOTES

1. SPECIFICATION FOR CONSTRUCTION OF UNDERGROUND FACILITIES CS7001, SHALL GOVERN.
2. EXCAVATIONS: EXCAVATE FOR HANDHOLE TO ACCURATE ALIGNMENT, GRADES AND DIMENSIONS AS SHOWN ON DRAWINGS. ALL EXCAVATION MUST BE APPROVED BY THE ENGINEERING DEPT., HECO, BEFORE ANY CONCRETE IS POURED. ALL OVEREXCAVATION SHALL BE FILLED WITH CONCRETE USED FOR THE HANDHOLE OR BACKFILLED WITH COMPACTED SELECTED MATERIAL AS DIRECTED BY THE ENGINEER (HECO).
3. BACKFILL: REMOVE ALL DEBRIS BEFORE BACKFILLING. BACKFILL IN ACCORDANCE WITH THE LATEST SPECIFICATIONS OF DIVISION OF HIGHWAYS, STATE OF HAWAII.
4. ALL WORK TO BE DONE IN DRY.
5. CONCRETE COMPRESSIVE STRENGTH - 3000 PSI IN 28 DAYS.
6. MIXING: READY MIXED A.S.T.M., C-94.
7. REINFORCING: ROUND DEFORMED BARS, (CLEAN & NEW).
8. SPLICE IN ACCORDANCE WITH LATEST AASHTO STANDARDS.
9. CURING: KEEP CONCRETE MOIST AT LEAST 7 DAYS AFTER POURING (BY APPROVED METHOD).
10. FINISH: ALL SURFACES SMOOTH AND FREE FROM DEFECTS.
    HANDHOLE FLOOR - STEEL TROWELLED
    WALLS & CEILING - CEMENT WASHED
11. INSTALL ALL INSERTS, INCLUDING PULLING IRONS, GROUND RODS, ETC., BEFORE POURING CONCRETE.
12. POURING: NOTIFY THE HECO CONTRACTING & INSPECTION DIVISION, PH. 548-4427 OR 548-4428, 24 HOURS BEFORE POURING ANY CONCRETE. ALL CONCRETE POURING SHALL BE DONE IN THE PRESENCE OF AN HECO ENGINEER OR INSPECTOR.
13. FORMS: MAKE OF GOOD SOUND LUMBER OF SUFFICIENT STRENGTH, WATER TIGHT AND CONFORMING TO SHAPE AND DIMENSIONS INDICATED ON DRAWINGS.
14. SLOPE HANDHOLE FLOOR DRAIN 1" TOWARDS SUMP.
15. ALL WORK SHALL BE SUBJECT TO INSPECTION BY THE HAWAIIAN ELECTRIC CO., INC. AND DIVISION OF HIGHWAYS, STATE OF HAWAII.
16. ALL MATERIALS SHALL BE NEW AND MANUFACTURED IN THE UNITED STATES OF AMERICA.
17. SEE HANDHOLE WALL ELEVATION DRAWINGS FOR NUMBER, SIZE AND LOCATION OF DUCT ENTRANCES AND PULLING IRONS ~~(HECO DWG. NO. 24871)~~ SHEET U-5.
18. FOR MISCELLANEOUS HANDHOLE DETAILS, REFER TO HECO DWG. 16688-A (SHEETS 1 & 2).
19. HOLLOW METAL DOOR W/THRESHOLD (3'-0"X6'-8"X1-3/4")-DOOR SHALL BE MORTISED, DRILLED, TAPPED, AND REINFORCED FOR HARDWARE TO TEMPLATES. FINISH SHALL BE THE MANUFACTURER'S STANDARD BAKED-ON PRIMER. DOOR FRAMES SHALL BE OF NO. 16 GAUGE STEEL. THE LOCKSET (5211-NC-US10: GOV. NO. 86B-4), FURNISHED BY CONTRACTOR, SHALL BE KEYED TO HECO'S SYSTEM (HECO TO PROVIDE CYLINDER). FINISH PAINT DOOR WITH W.P. FULLER 260-XX "HOUSE & TRIM PAINT" COLORED "WYNWOOD".
20. EXTERIOR SURFACES OF WALLS & ROOF SHALL BE WATER-SEAL PAINTED.

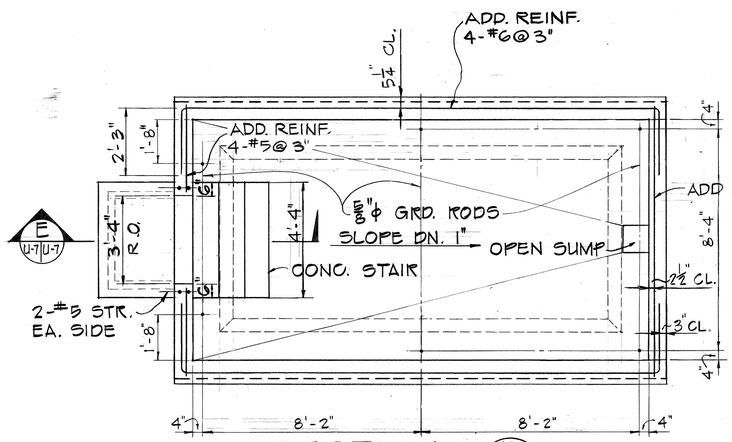

SECTION B U-7 U-7
SCALE: 3/8"=1'-0"

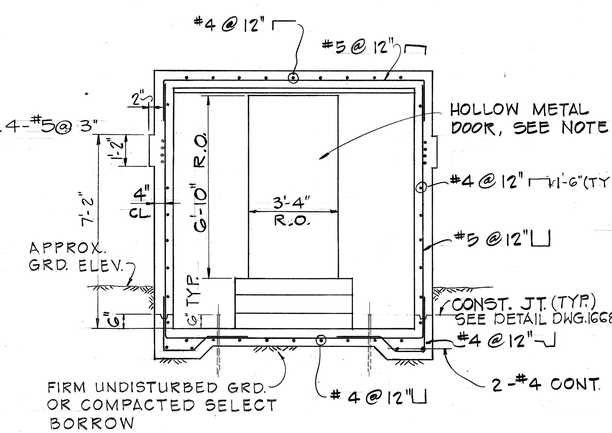

SECTION C U-7 U-7
SCALE: 3/8"=1'-0"

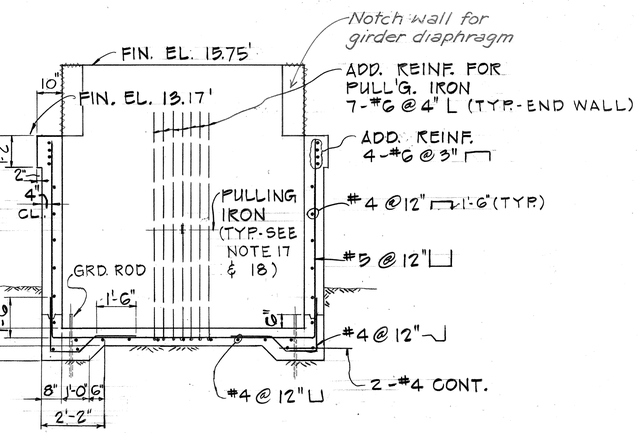

SECTION D U-7 U-7
SCALE: 3/8"=1'-0"

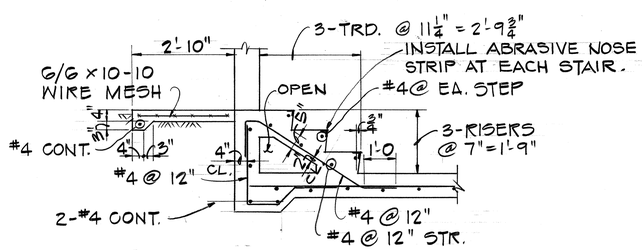

SECTION E U-7 U-7
SCALE: ½ = 1'-0"

QUANTITY OF MATERIALS

CONCRETE	18.75 CU YD
REINFORCING	1580 LBS.
REINFORCING - ADDITIONAL (PULLING IRON ONLY - EA)	90 LBS. +
MISCELLANEOUS STEEL (PULLING IRON ONLY)	10.9 LBS.

STANLEY I. TANNO REGISTERED PROFESSIONAL ENGINEER No. 1927 HAWAII, U.S.A.

THIS WORK WAS PREPARED BY ME OR UNDER MY SUPERVISION.
Stanley I. Tanno 6/2/77

APPROVED	DATE
as to CIVIL-STRUCTURAL: J. K. Stewart Jr.	6-3-77
as to ELECTRICAL: F. Karimoto	6-7-77

HAWAIIAN ELECTRIC COMPANY, INC.

HECO INC DRAWING NUMBER
23350

STATE OF HAWAII
DEPARTMENT OF TRANSPORTATION
HIGHWAYS DIVISION

ELECTRIC HANDHOLE 'B'

INTERSTATE ROUTE H-1
PROJECT NO. I-H1-1(131):17

SCALE: AS NOTED
DATE: AUG. 31, 77

SHEET No. U-7 OF U-23 SHEETS

ORIGINAL PLAN		DATE
	SURVEY PLOTTED BY	
	DRAWN BY	
	TRACED BY	
NOTE BOOK	DESIGNED BY	
	QUANTITIES BY	
No.	CHECKED BY	

FED ROAD DIST. NO.	STATE	FED AID PROJ. NO.	FISCAL YEAR	SHEET NO.	TOTAL SHEETS
HAWAII	HAW.	I-H1-(131).17	1977	180	394

NOTES:

1. FOR GENERAL NOTES, SEE SHEET NO. 173
2. CAST IRON FRAME AND COVER HAVE TO BE PAINTED WITH ASPHALTUM PAINT FOR CORROSION PREVENTION.

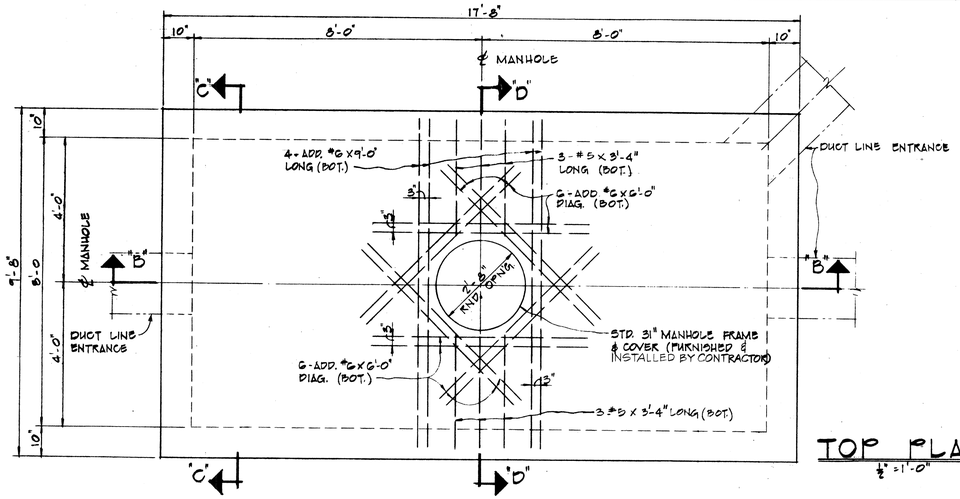

TOP PLAN
½" = 1'-0"

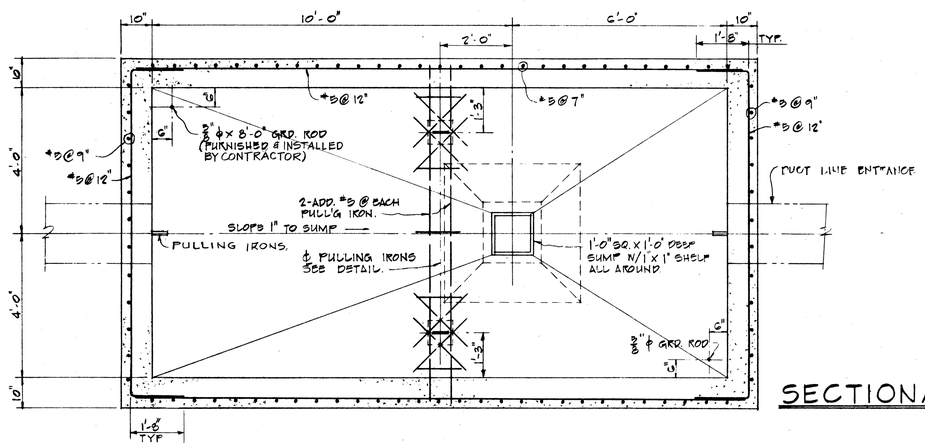

SECTIONAL PLAN "A-A"
½" = 1'-0"

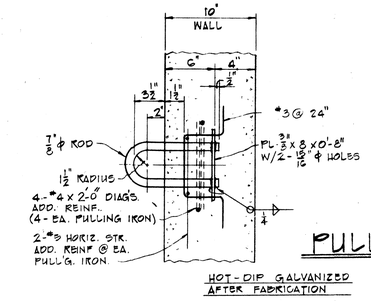

PULLING IRON DETAIL
1½" = 1'-0"

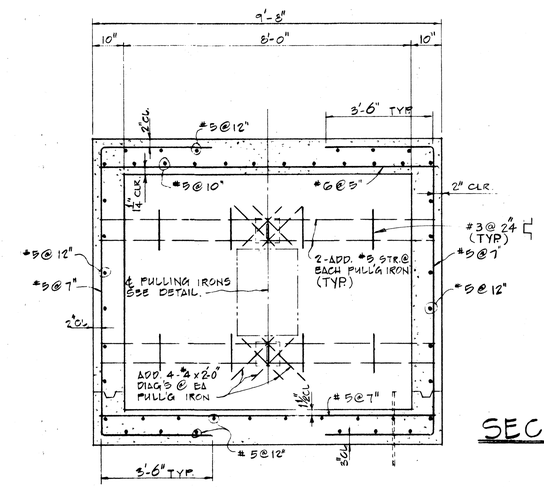

SECTION "C-C"
½" = 1'-0"

REFERENCE DRAWINGS (HECO)

CS-7001-	CONSTRUCTION OF UNDERGROUND FACILITIES (6 SHEETS) SPECIFICATION SHEET
CS-7003-	CONSTRUCTION OF ELECTRICAL FACILITIES (4 SHEETS) SPECIFICATION SHEET
0-11327	STANDARD HECO 31" MANHOLE COVER
0-11328	STANDARD HECO 31" MANHOLE FRAME
16688-A	MISCELLANEOUS DETAILS, MANHOLES & HANDHOLES

QUANTITY OF MATERIALS, (M.H. ONLY)

CONCRETE	22.80 C.Y.
REINFORCING	2977 LBS.
MISC STEEL (PULLG IRONS, EA.)	10.9 LBS

ADDITIONAL QUANTITY OF MATERIALS FOR ALTERNATE M.H. NECK (DIMENSION "X" = 2'0")

CONCRETE	0.50 C.Y.
REINFORCING	42.51 LBS

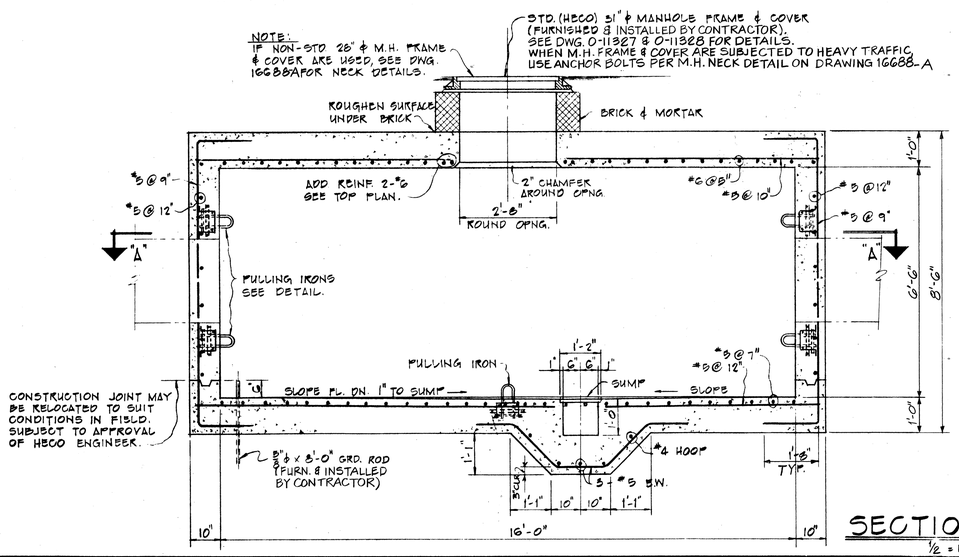

SECTION "B-B"
½" = 1'-0"

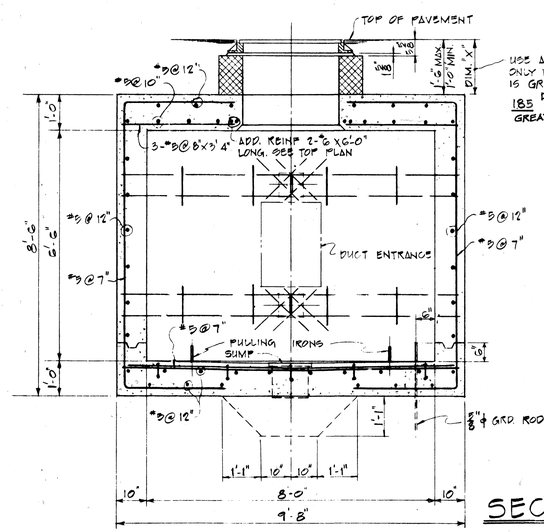

SECTION "D-D"
½" = 1'-0"

REGISTERED PROFESSIONAL ENGINEER No. 3647 HAWAII U.S.A.

THIS WORK WAS PREPARED BY ME OR UNDER MY SUPERVISION.
John B. Anderson

APPROVED:

MG
DIR. J. Karimoto 8/10/77
HAWAIIAN ELECTRIC CO., LTD. DATE

STATE OF HAWAII
DEPARTMENT OF TRANSPORTATION
HIGHWAYS DIVISION

ELECTRIC
MANHOLE TYPE #6
(8'-0" X 16'-0" X 6.5')

INTERSTATE ROUTE H-1
PROJECT NO. I-H1-1 (131) 17

SCALE: AS SHOWN DATE: AUG. 31, 1977

SHEET NO. U-8 OF U-23 SHEETS

ORIGINAL PLAN | SURVEY PLOTTED BY | DRAWN BY | NOTE BOOK | TRACED BY | DESIGNED BY | QUANTITIES BY | CHECKED BY | NO.

FED. ROAD DIST. NO.	STATE	FED. AID PROJ. NO.	FISCAL YEAR	SHEET NO.	TOTAL SHEETS
HAWAII	HAW.	I-H1-1(131)17	1977	181	394

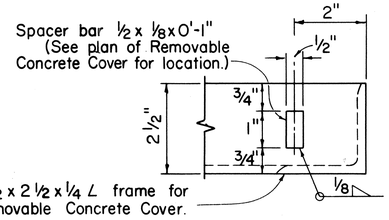

PART ELEVATION
SPACER BAR
Scale: ½ full size

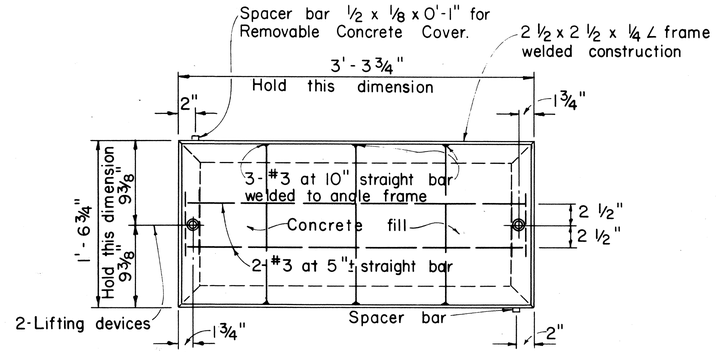

PLAN
Scale: 1½" = 1'-0"

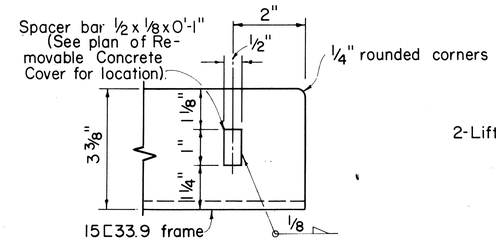

PART ELEVATION
SPACER BAR
Scale: ½ full size

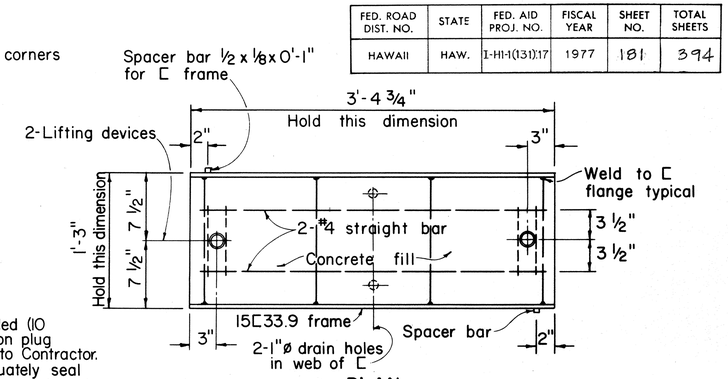

PLAN
Scale: 1½" = 1'-0"

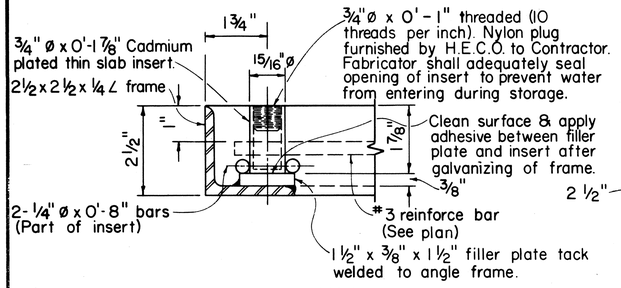

PART SECTION
LIFTING DEVICE
Scale: ½ full size

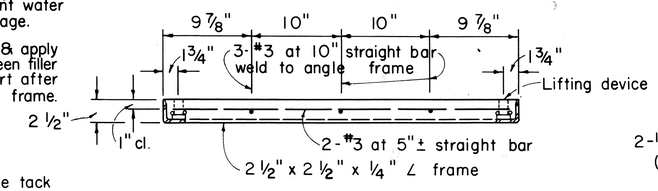

SECTION
Scale: 1½" = 1'-0"

NOTE: Galvanize L frame or [frame, steel rods, and spacer bars after fabrication.

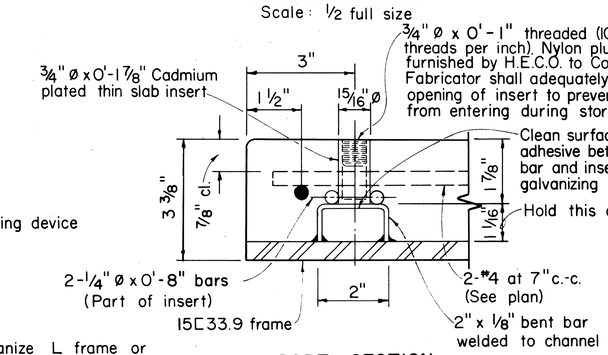

PART SECTION
LIFTING DEVICE
Scale: ½ full size

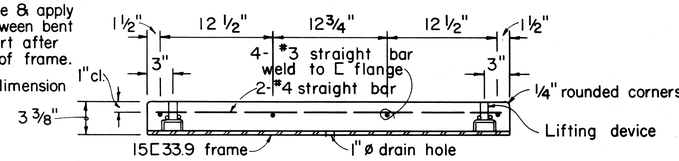

SECTION
Scale: 1½" = 1'-0"

TYPE "SW" REMOVABLE CONCRETE COVER

TYPE "TR" REMOVABLE CONCRETE COVER

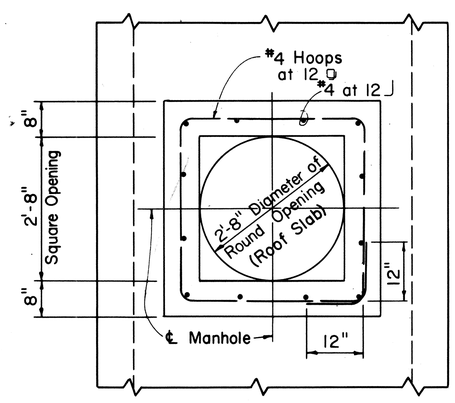

PLAN

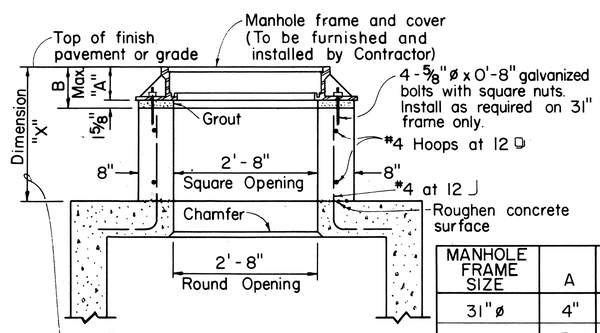

MANHOLE FRAME SIZE	A	B
31" ø	4"	5⅝"
28" ø	7⅜"	9"

NOTE:
Use alternate manhole neck only when dimension "X" is greater than 1'-6", but less than 3'-0".*

SECTION

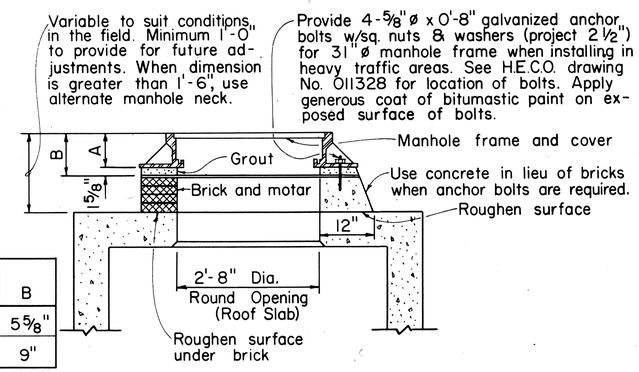

NOTE:
See table alternate manhole neck detail for dimension A and B.

ALTERNATE MANHOLE NECK

Scale: ¾" = 1'-0"

31" ø & 28" ø MANHOLE FRAME NECK DETAIL

Scale: ¾" = 1'-0"

* For "X" equal or greater than 3'-0" see Sheet 186

GENERAL NOTES

1. On handhole covers, maximum clearances must be kept between removable concrete cover slabs and concrete openings at the supports. Contractor shall measure cover slabs steel frame after fabrication to obtain proper clearances. All covers after being installed shall be seated firmly and evenly and be free from rocking. Any variation in clearances and unevenness shall be corrected to the satisfaction of the Engineer at the Contractor's expense.
2. Concrete Pouring: Notify the Hawaiian Electric Co., Inc. Contracting & Inspection Division, 24 hours before pouring concrete. All concrete pouring shall be done in the presence of a Hawaiian Electric Co., Inc. Engineer or Inspector.
3. All materials shall be new and manufactured in the United States of America.

APPROVED:
a.o. M.G. J. Karimoto 8/10/77
Hawaiian Electric Co., Inc. Date

HECo., Inc. Drawing Number
16688-A
SHEET NO. 1 OF 2 SHEETS

STATE OF HAWAII
DEPARTMENT OF TRANSPORTATION
LAND TRANSPORTATION FACILITIES DIVISION

MISCELLANEOUS DETAILS
HANDHOLES & MANHOLES
UNDERGROUND STANDARDS
(ELECTRIC)

Scale as noted

SHEET No. U-9 OF U-23 SHEETS

ORIGINAL PLAN | SURVEY PLOTTED BY | DRAWN BY | TRACED BY | DESIGNED BY | QUANTITIES BY | CHECKED BY | DATE | NOTE BOOK No.

FED. ROAD DIST. NO.	STATE	FED. AID PROJ. NO.	FISCAL YEAR	SHEET NO.	TOTAL SHEETS
HAWAII	HAW.	I-H1(131), 17	1977	182	394

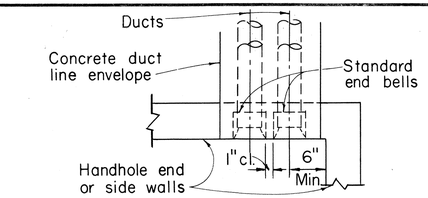

PLAN

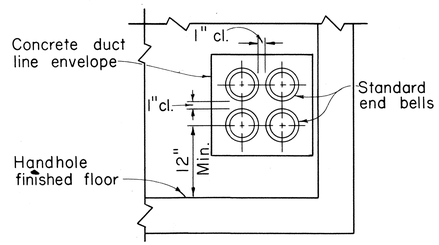

ELEVATION

END OR SIDE ENTRANCE

Scale: 1" = 1'-0"

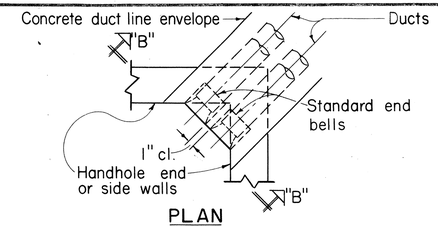

PLAN

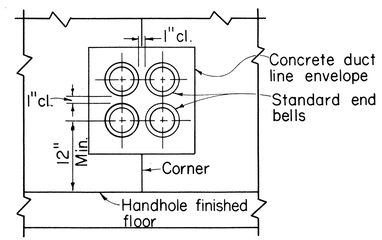

ELEVATION "B-B"

CORNER ENTRANCE

Scale: 1" = 1'-0"

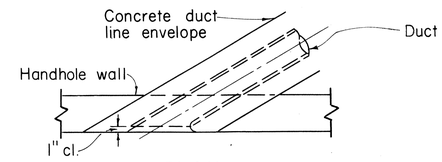

PLAN

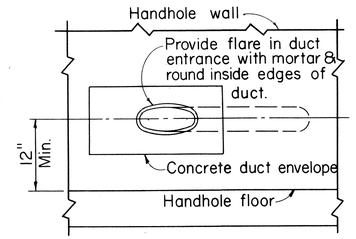

ELEVATION

DIAGONAL ENTRANCE

Scale: 1" = 1'-0"

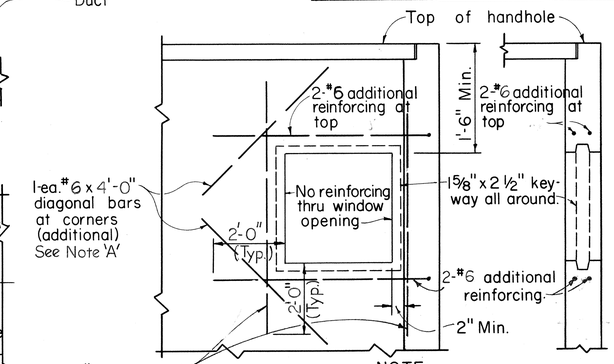

NOTE:
Provide opening for future ductline. Fill opening with bricks and mortar joints as required.

ELEVATION SECTION

KNOCKOUT FOR FUTURE DUCT LINE

Scale: N.T.S.

NOTE 'A':
The Reinforcement around opening to be bent where there is insufficient clearance.

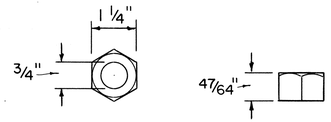

3/4" ø AMERICAN STANDARD HEAVY BRASS HEXAGON NUT

Scale: 1/2 full size

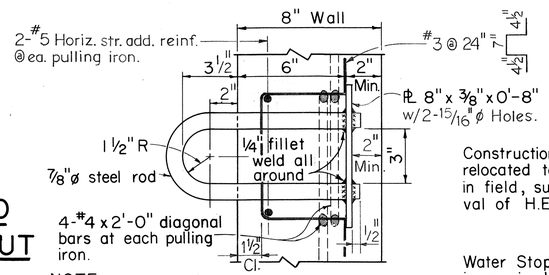

NOTE:
Hot-dip galvanized after fabrication.

SECTION

PULLING IRON

Scale: 3" = 1'-0"

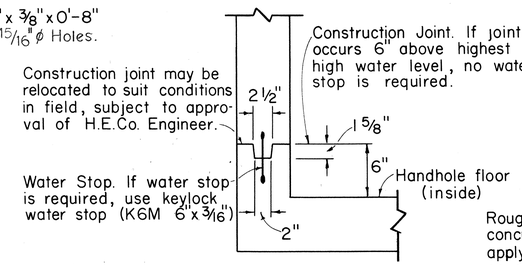

SECTION

TYPICAL CONSTRUCTION JOINT

Scale: 1 1/2" = 1'-0"

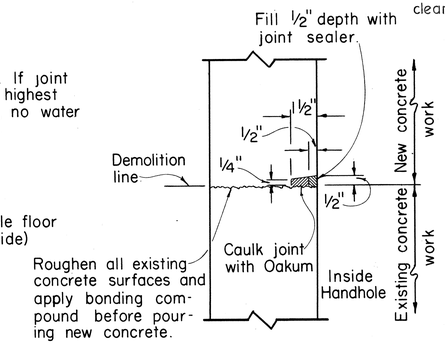

SECTION

TYPICAL COLD JOINT

Scale: 3" = 1'-0"

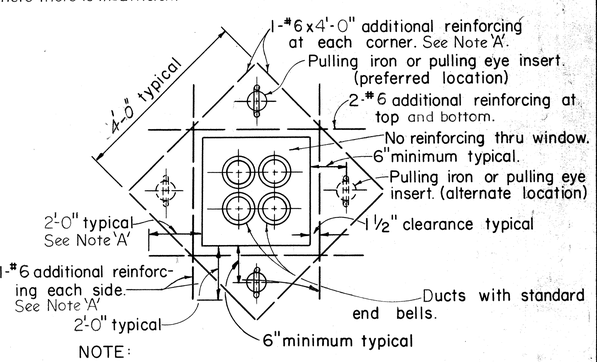

NOTE:
Generally 2 pulling irons or pulling eye inserts are required and located on opposite wall of each duct window unless otherwise shown or noted. H.E.Co. Engineer shall determine number required.

ELEVATION

TYPICAL DUCT WINDOW

Scale: N.T.S.

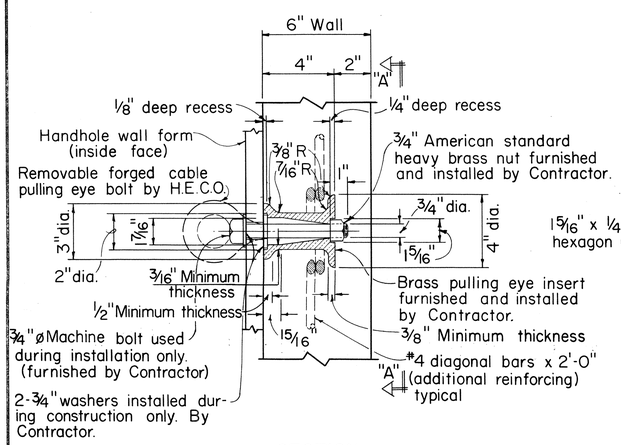

SECTION

BRASS PULLING EYE INSERT

Scale: 3" = 1'-0"

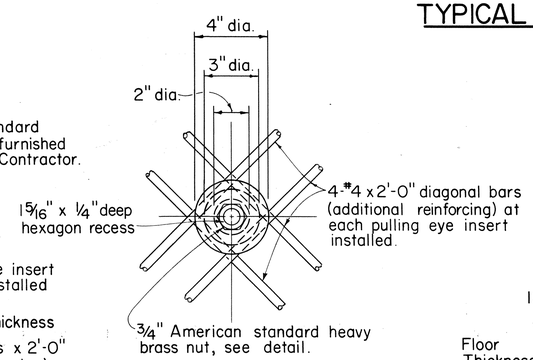

NOTE:
Contractor shall place advance orders for cast brass pulling eye inserts.

SECTION "A-A"

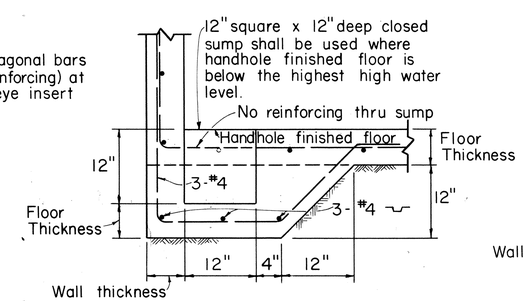

SECTION

CLOSED SUMP

Scale: 1" = 1'-0"

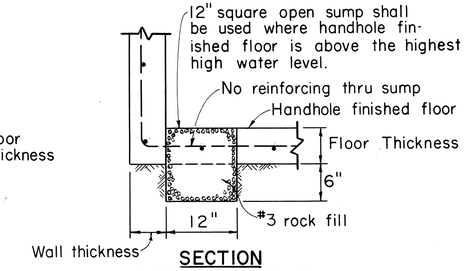

SECTION

OPEN SUMP

Scale: 1" = 1'-0"

APPROVED:
ENG. J. Karimoto
Hawaiian Electric Co., Inc.
8/10/77
Date

HECo., Inc. Drawing Number
16688-A
SHEET NO. 2 OF 2 SHEETS

STATE OF HAWAII
DEPARTMENT OF TRANSPORTATION
LAND TRANSPORTATION FACILITIES DIVISION

MISCELLANEOUS DETAILS HANDHOLES & MANHOLES UNDERGROUND STANDARDS (ELECTRIC)

Scale as noted

SHEET No. U-10 OF U-23 SHEETS

ORIGINAL PLAN | SURVEY PLOTTED BY | DRAWN BY | TRACED BY | DESIGNED BY | QUANTITIES BY | CHECKED BY | NOTE BOOK | No. | DATE

FED. ROAD DIST. NO.	STATE	FED. AID PROJ. NO.	FISCAL YEAR	SHEET NO.	TOTAL SHEETS
HAWAII	HAW.	I-H1-1(131)17	1977	183	394

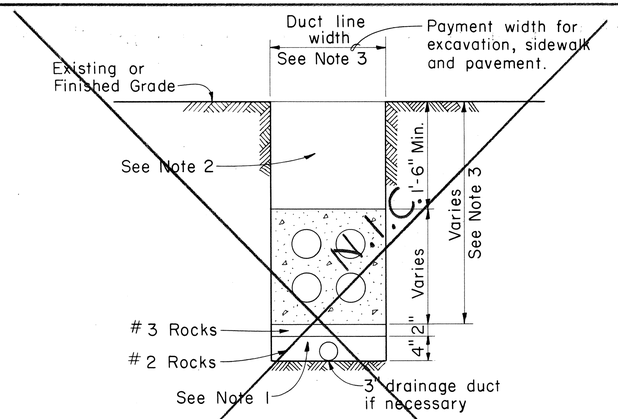

NOTES:

1. If drainage is necessary, install 6" rockfill as shown. In extremely watery areas, install 3" drainage duct.
2. Refer to H.E.Co. Specification CS7001-0 (or equivalent) for backfill material requirements.
3. Size of concrete envelope and depth of excavation to be determined by specific project.

EB EXCAVATION AND BACKFILL DETAILS

(TYPICAL)

Scale: 1 1/2" = 1'-0"

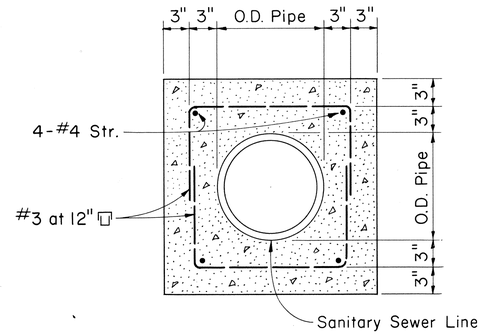

CROSS-SECTION OF SEWER LINE

NOTE:

Where duct line crosses sewer line, cover sewer line with concrete jacket as indicated in specification.

DUCT LINE WIDTH	LENGTH OF SEWER LINE TO BE COVERED
24" or less	5'
Greater than 24"	(Width of duct line) + (5')

SANITARY SEWER LINE CROSSING DETAIL

Scale: 1 1/2" = 1'-0"

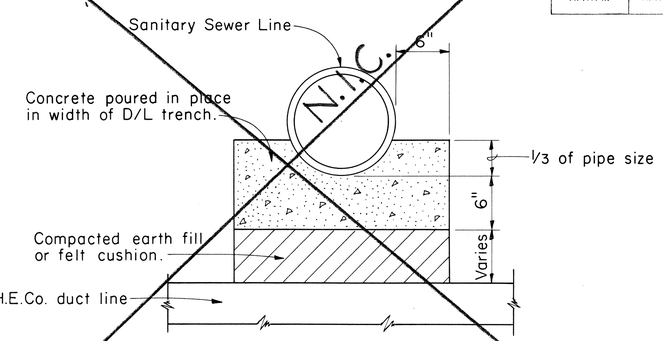

CONCRETE CRADLE FOR SANITARY SEWER LINE CROSSING

Scale: 1 1/2" = 1'-0"

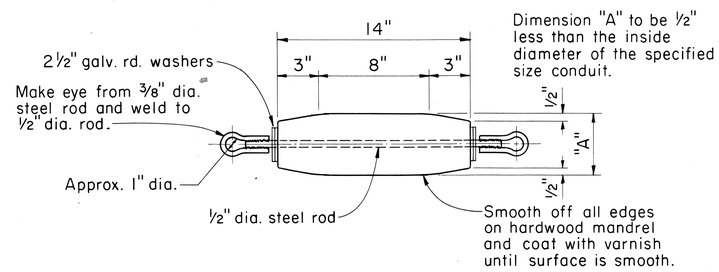

MANDREL DETAIL

Not To Scale

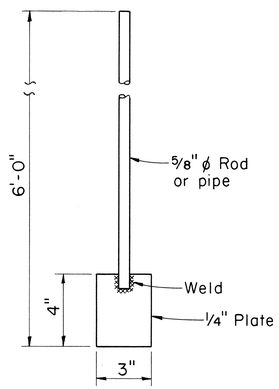

HAND SPADE

Scale: 3" = 1'-0"

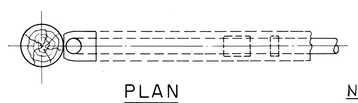

PLAN

NOTE 1:

Use 3' radius bend PVC for 12 KV ducts and 6' radius bend PVC for 46 KV ducts unless otherwise shown or noted on project plans.

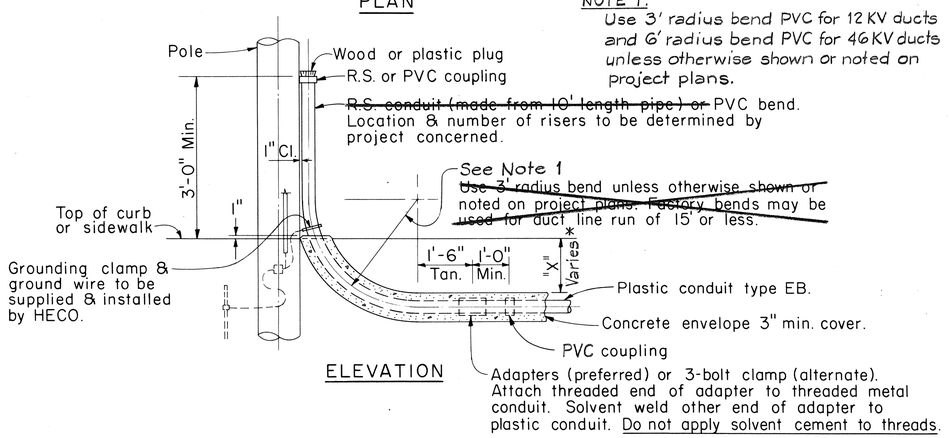

ELEVATION

TYPICAL RISER DETAIL

(POLE RISER SHOWN)

Scale: 1/2" = 1'-0"

* For sidewalk area "X" = 2'-0" Min.
For roadway and shoulder area "X" = 3'-0" Min.

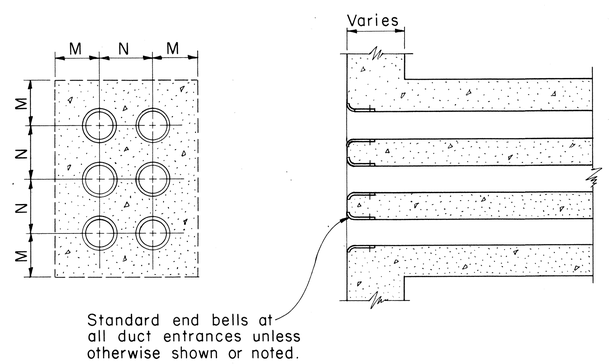

TYPICAL CONDUIT ENTRANCE INTO HANDHOLE, MANHOLE OR VAULT WALLS

(6 WAY DUCT LINE SHOWN)

Scale: 1 1/2" = 1'-0"

DUCT SIZE	DIMENSIONS (INCHES) M	DIMENSIONS (INCHES) N
2	4	5
3	5	6
4	5 1/2	7
5	6	8
6	6 5/16	9

APPROVED:

Hawaiian Electric Co., Inc. — Date 8/10/77

HECo., Inc. Drawing Number

30-1030-A

STATE OF HAWAII
DEPARTMENT OF TRANSPORTATION
LAND TRANSPORTATION FACILITIES DIVISION

TYPICAL DUCT CONSTRUCTION INSTALLATION DETAILS UNDERGROUND DETAILS (ELECTRIC)

Scale as noted

SHEET No. U-11 OF U-23 SHEETS

ORIGINAL PLAN		DATE
	SURVEY PLOTTED BY	
	TRACED BY	
	DESIGNED BY	
NOTE BOOK	QUANTITIES BY	
No.	CHECKED BY	

FED. ROAD DIST. NO.	STATE	FED. AID PROJ. NO.	FISCAL YEAR	SHEET NO.	TOTAL SHEETS
HAWAII	HAW.	I-HH-1(30):17	1977	184	394

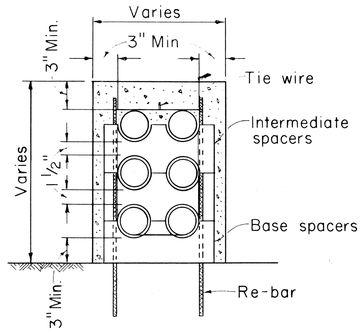

SECTION

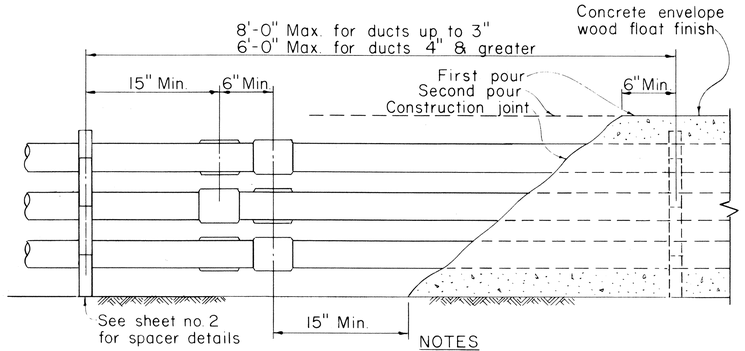

ELEVATION

TYPICAL DUCT LINE

(6-WAY DUCT SHOWN)

Scale: 1 1/2" = 1'-0"

NOTES

1. Stagger couplings (or belled ends).
2. Anchor conduit with #14 steel tie wire & #4 reinforcing bars.
3. Cement all joints.
4. Avoid standing on conduit.

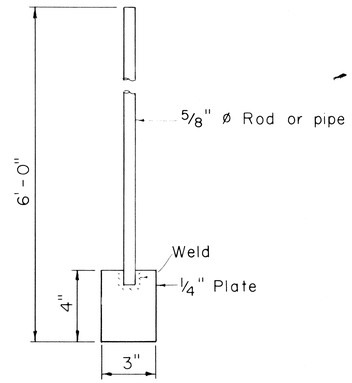

HAND SPADE

Scale: 3" = 1'-0"

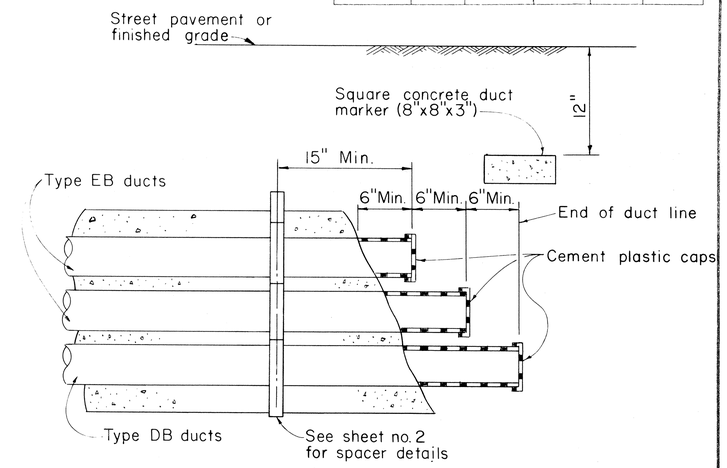

TYPICAL STUB OUT DETAIL

(6-WAY DUCT SHOWN)

Scale: 1 1/2" = 1'-0"

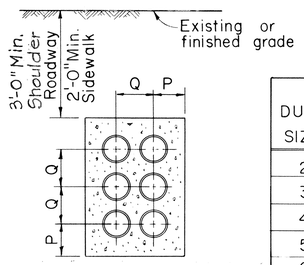

DUCT SIZE	DIMENSIONS (INCHES) P	Q
2	4 1/4	4 1/8
3	4 3/4	5 1/8
4	5 1/4	6 1/4
5	5 7/8	7 5/8
6	6 5/16	8 5/8

EB TYPICAL DUCT SECTION

(6-WAY DUCT SHOWN)

Scale: 1" = 1'-0"

NOTE:

1. Maintain 1 1/2" minimum spacing between conduit; 3" minimum concrete envelope around top, bottom & sides.
2. Dimensions are minimum dimensions.
3. The bottom row in an encased duct bank of three or more layers shall be Type DB ducts. The remaining ducts shall be Type EB.
4. Refer to G0-10 or specified project drawings for depth requirements.

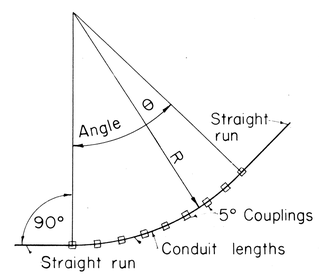

TABLE "A"	
APPROX. RADIUS OF BEND, R	LENGTH OF EA. CONDUIT-FT USING 5° BEND AT COUPL.
11'-6"	1
17'-3"	1.5
23'-0"	2
28'-9"	2.5
34'-6"	3
40'-3"	3.5
46'-0"	4
51'-9"	4.5
57'-6"	5
69'-0"	6
80'-6"	7
92'-0"	8

EXAMPLE:

Radius of bend (R) = 60'
Angle of bend (θ) = 45°

From Table A, the nearest value to 60' radius is 57'-6". Length of conduit = 5'.

From Table B, for 45° angle.
Number of couplings required = 9
Number of conduit lengths required = 8

TABLE "B"		
ANGLE OF BEND θ	NO. OF COUPLINGS	LENGTH OF CONDUIT
15°	3	2
30°	6	5
45°	9	8
60°	12	11
75°	15	14
90°	18	17

METHOD OF FORMING CURVES:

There are 4 methods of forming curves with plastic conduit.

1. "Cold" bending: Limit trench formed radius sweeps to 25' minimum radius.
2. "Heat" bending: Do not heat bend conduit.
3. 5° angle couplings may be used as shown.
4. Factory made elbows and sweeps may be used only when specified by Engineer.

APPLICATION OF 5° COUPLING FOR LONG RADIUS BENDS

GENERAL NOTES

HECO PURCHASE SPECIFICATION NO.

A. APPROVED CONDUIT MATERIALS
   1. Encased Burial (EB) Conduit
      a) Asbetos Cement, Type I M7005
      b) ABS (Acrylonitrile-Butadiene-Styrene) Plastic Conduit, Type EB M7001
      c) PVC (Polyvinyl Chloride) Plastic Conduit, Type EB M7001
      d) PVC Plastic Conduit, Schedule 40 116
      See note 3 EB Typical Duct Section
   2. Direct Burial (DB) Conduit
      a) ABS Plastic Conduit, Type DB M7001
      b) PVC Plastic Conduit M7001
      c) PVC Plastic Conduit, Schedule 40 116
B. This drawing provides details for installing Plastic Ducts (ABS & PVC) only. ~~Refer to drawing 30-1030 & 30-1033 for installing Asbestos Cement Ducts Encased Burial.~~

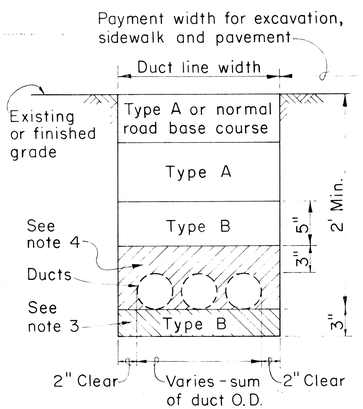

D.B. EXCAVATION & BACKFILL DETAILS (TYPICAL)

Scale 1 1/2" = 1'-0"

NOTES:

1. Type A: Beach sand, earth or earth and gravel. If earth and gravel, the max. rock size shall be 1" and the mixture shall contain not more than 50%, by volume, of rock particles.
2. Type B: Beach sand, earth or earth and gravel. If earth and gravel, the mixture must pass a 1/2" mesh screen and contain not more than 20%, by volume, of rock particles.
3. When trench bottom is coarser than Type B material, provide 3" duct cushion.
4. Soil poison details: Use an aqueous solution of 2% chlordane, 1% dieldrin or 1% adlrin, when specified by engineer. Apply soil poison (1 gal. per 3 square feet) to trench floor and to layer of backfill from trench floor to 3" above conduit.

REFERENCE SPECIFICATION

CS 7202	General Conditions
CS 7001	Construction of U.G. Facilities
CS 7003	Construction of Electrical Facilities

APPROVED:
J. Karimoto
Hawaiian Electric Co., Inc.
8/10/77
Date

HECo., Inc. ~~Drawing~~ Number
30-1035-A SHEET No. 1 OF 2 SHEETS

STATE OF HAWAII
DEPARTMENT OF TRANSPORTATION
LAND TRANSPORTATION FACILITIES DIVISION

STANDARD DETAILS

PLASTIC DUCTS
INSTALLATION DETAILS
UNDERGROUND STRUCTURES
(ELECTRIC)

Scale as noted

SHEET No. U-12 OF U-23 SHEETS

ORIGINAL PLAN | SURVEY PLOTTED BY | DRAWN BY | TRACED BY | DESIGNED BY | QUANTITIES BY | CHECKED BY | DATE | NOTE BOOK | No.

FED. ROAD DIST. NO.	STATE	FED. AID PROJ. NO.	FISCAL YEAR	SHEET NO.	TOTAL SHEETS
HAWAII	HAW.	I-HI-1(131)17	1977	185	395

10, 20 & 30 Ft. lengths available.

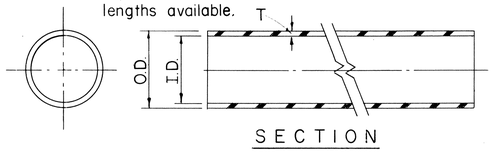

CONDUIT SIZE	EB (ENCASED BURIAL) HECO CODE	O.D.	I.D.	T (MIN.)	WEIGHT #/10² FT.	DB (DIRECT BURIAL) HECO CODE	O.D.	I.D.	T (MIN.)	WEIGHT #/10² FT.
2		2.375	*2.25	.060	21	29010	2.375	2.15	.110	38
3		3.500	3.35	.075	39	29012	3.500	3.25	.125	64
4		4.500	4.31	.095	63	29014	4.500	4.18	.160	104
5		5.563	5.36	.100	82	29016	5.563	5.20	.180	146
6		6.625	6.375	.125	121		6.625	6.25	.190	182

NOTE: Type EB & DB Conduits have same O.D. for a given size. All fittings which go over Conduits are DB type & fit both types of Conduits.

CONDUIT

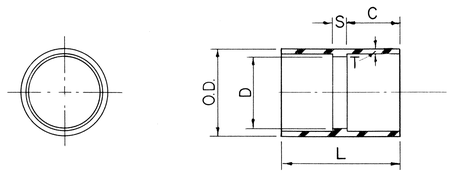

SIZE	HECO CODE	O.D.	D	L	C	S	T
2		2.620	2.255	2 7/16	1.16	.110	.110
3		3.780	3.350	3 3/8	1.63	.120	.125
4		4.855	4.310	3 11/16	1.78	.120	.160
5		5.965	5.363	4 3/32	1.97	.160	.180
6		7.050	6.375	4 15/32	2.16	.160	.190

COUPLING (ASTM D-2750)

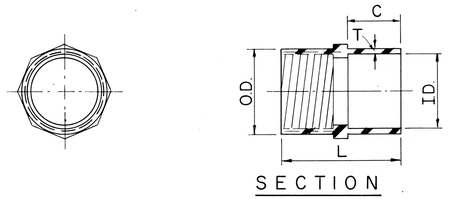

SIZE	HECO CODE	O.D.	I.D.	L	T	C
2				2 15/16	1 1/16	1.16
3				3 7/16	1 5/8	1.63
4				3 11/16	1 23/32	1.78
5				4 1/16	1 27/32	1.97
6				15 5/8	1 11/16	3.44

ADAPTER - PLASTIC TO STEEL

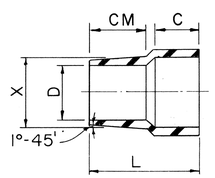

SIZE	HECO CODE	L	X	C.M.	D	C
2		3 1/16	2.580	1 3/4	2.18	1.16
3		3 19/32	3.620	1 3/4	3.09	1.63
4		4 1/32	4.620	2	4.03	1.78
5						

ADAPTER - PLASTIC TO ASBESTOS CEMENT

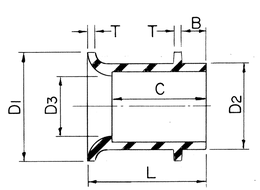

SIZE	HECO CODE	D1	D2	D3	B	C	L	T
2		3.01	2.520	2.255	.50	1.16	1.54	.060
3		4.10	3.680	3.350	.75	1.63	2.00	.075
4		5.31	4.725	4.310	.75	1.78	2.28	.095
5		6.36	5.805	5.363	1.00	1.97	2.47	.100
6		7.38	6.920	6.375	1.00	2.16	2.66	.125

END BELL (ASTM D-2750)

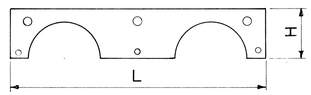

SIZE	HECO CODE	L	H
2		9.50	1.75
3		11.25	2.25
4		13.75	3.13
5		15.87	3.63
6		18.0	4.25

CAP SPACER

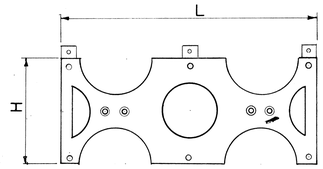

SIZE	HECO CODE	L	H	W
2		9.50	3.94	
3		11.25	5.06	
4		13.75	6.06	
5		15.97	7.06	
6		18.0	8.19	

INTERMEDIATE SPACER

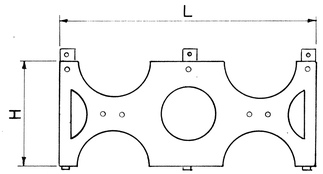

SIZE	HECO CODE	L	H
2		9.50	4.25
3		11.25	4.75
4		13.75	5.25
5		15.87	5.87
6		18.0	6.375

BASE SPACER

DUCT SPACER COMPONENTS
(FORMEX SPACER OR EQUIVALENT)

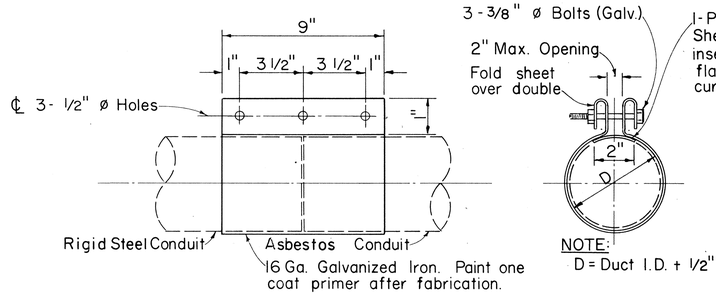

SIZE	HECO CODE
2	13126
3	13128
4	13130
5	13132
6	

3 - BOLT CLAMP

GENERAL NOTES:

1. All dimensions in inches.
2. Spacers shown are different than that used for Asbestos Cement Type.
3. These accessories are to be used with ABS (Acrylonitrile-Butadiene - Styrene), or PVC (Poly-Vinyl Chloride) Plastic Conduit, per HECO purchase specification M7001-O.

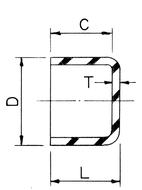

SIZE	HECO CODE	D	C	L	T
2		2.52	.59	.65	.060
3		3.68	.81	.89	.075
4		4.725	.91	1.01	.095
5		5.805	1.00	1.10	.100
6		6.920	1.13	1.25	.125

CAP (RIGID) - FOR SEMI-PERMANENT USE (ASTM D-2750)

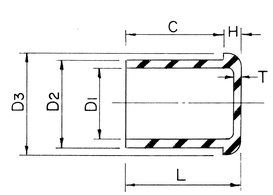

SIZE	HECO CODE	D1	D2	D3	C	H	L	T
2		2.260	2.375	2.500	.593	.125	.718	.060
3		3.360	3.500	3.656	.812	.156	.968	.075
4		4.320	4.500	4.687	.906	.187	1.092	.095
5		5.375	5.638	5.760	1.000	.218	1.218	.100
6		6.390	6.625	6.875	1.093	.250	1.343	.125

CAP (TEMPORARY) (ASTM D-2750)

NOTE: Cap will go over conduit or "plug" the coupling.

APPROVED:
m j
a/g J Karimoto 8/10/77
Hawaiian Electric Co., Inc. Date

HECo, Inc. Drawing Number
30-1035-A
SHEET NO. 2 OF 2 SHEETS

STATE OF HAWAII
DEPARTMENT OF TRANSPORTATION
LAND TRANSPORTATION FACILITIES DIVISION

STANDARD DETAILS
PLASTIC DUCTS
INSTALLATION DETAILS
UNDERGROUND STRUCTURES
(ELECTRIC)

Scales: Not to Scale

SHEET No. U-13 OF U-23 SHEETS

ORIGINAL PLAN	SURVEY PLOTTED BY	DATE
	DRAWN BY	"
	TRACED BY	"
NOTE BOOK	DESIGNED BY	"
	QUANTITIES BY	"
No.	CHECKED BY	"

FED. ROAD DIST. NO.	STATE	FED. AID PROJ. NO.	FISCAL YEAR	SHEET NO.	TOTAL SHEETS
HAWAII	HAW.	I-H1-1(131):17	1977	186	394

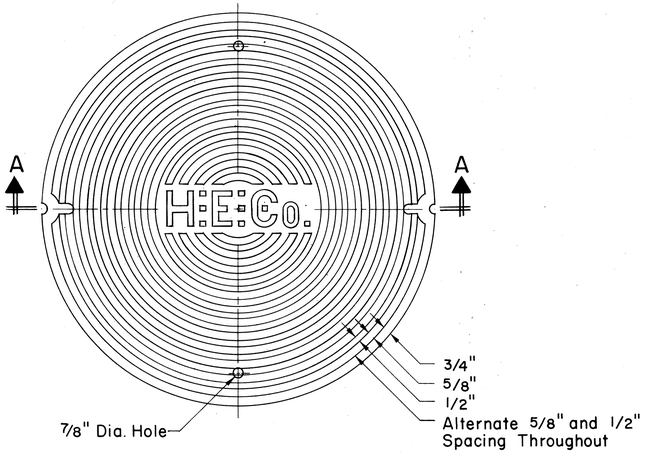

TOP VIEW

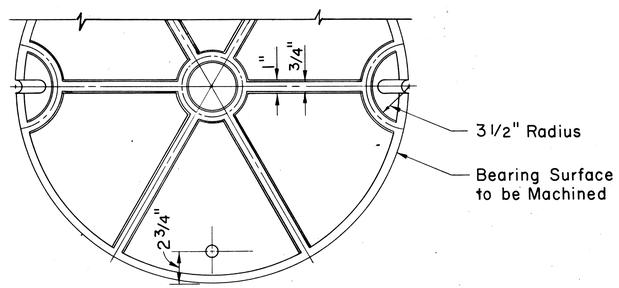

BOTTOM VIEW

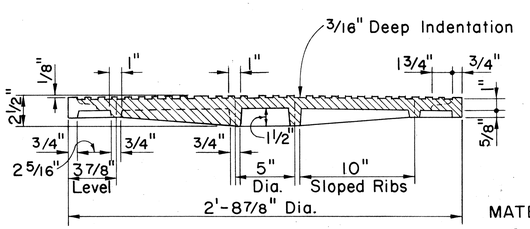

SECTION A-A

MATERIAL:
Cast Iron per ASTM A48, Class 30.

WEIGHT:
Approx. 262 lbs.

REFERENCE:
31" Manhole Frame - Dwg. 011328.

31" MANHOLE COVER

Scale: 2" = 1'-0"

011327

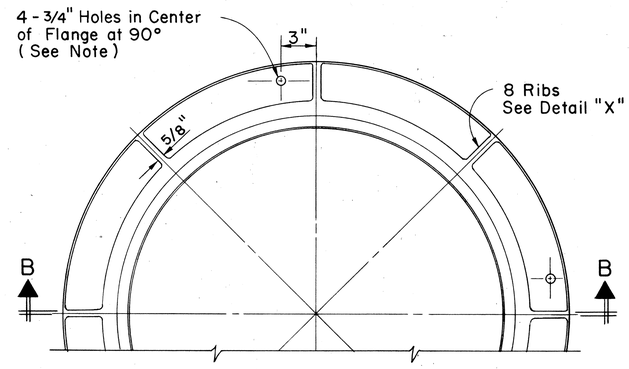

PARTIAL PLAN

Scale: 2" = 1'-0"

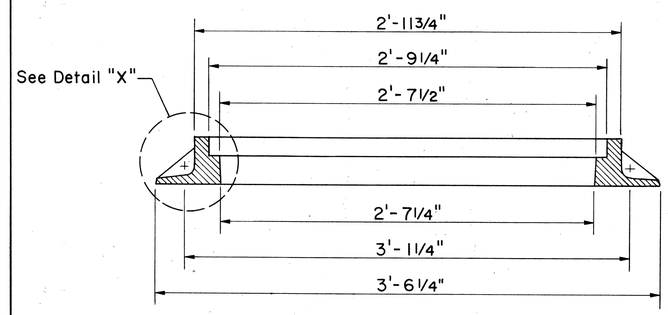

SECTION B-B

Scale: 2" = 1'-0"

INSTALLATION NOTE:
If frame is to be installed where heavy traffic will be on frame, insert 5/8" ϕ bolts thru holes in flange into concrete.

MATERIAL:
Cast Iron per ASTM A48, Class 30.

WEIGHT:
Approx. 300 lbs.

REFERENCE:
31" Manhole Cover - Dwg. 011327.

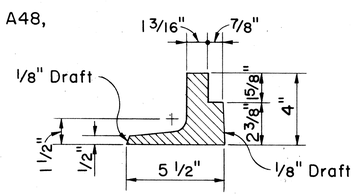

DETAIL "X"

Scale: 3" = 1'-0"

31" MANHOLE FRAME

Scale: As Shown

011328

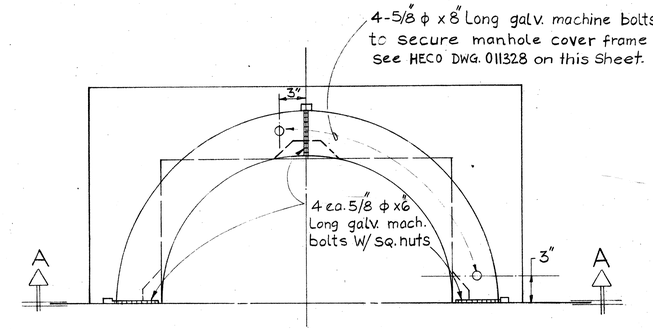

HALF PLAN

N.T.S

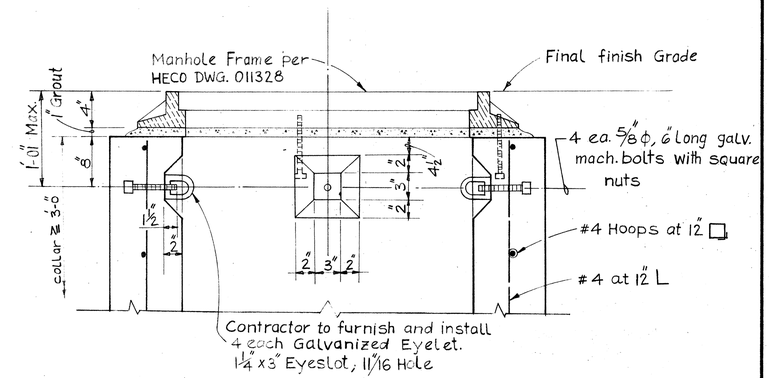

SECTION A-A

N.T.S

SPECIAL MANHOLE COLLAR DETAIL

(For Manhole Collar equal or greater than 3'-0")

APPROVED:

mg
6/6/77 J Karumoto
Hawaiian Electric Co., Inc. Date 8/10/77

STATE OF HAWAII
DEPARTMENT OF TRANSPORTATION
HIGHWAYS DIVISION

MANHOLE FRAME & COVER DETAILS
(ELECTRIC)
INTERSTATE ROUTE H-1
PROJECT NO. I-H1-1(131):17

SCALE: AS SHOWN DATE: AUG. 31, 1977

SHEET No. U-14 OF U-23 SHEETS

ORIGINAL PLAN	SURVEY PLOTTED BY	DATE
	DRAWN BY	
	TRACED BY	
NOTE BOOK	DESIGNED BY	
	QUANTITIES BY	
No.	CHECKED BY	

K+E IMPERIAL TRACING CLOTH LA 3207

HE-43

FED. ROAD DIST. NO.	STATE	FED. AID PROJ. NO.	FISCAL YEAR	SHEET NO.	TOTAL SHEETS
HAWAII	HAW.	I-H1-1(131)17	1977	187	394

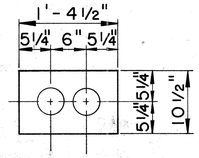

2 DUCTS

$\left(\frac{T}{2F-2}\right)$

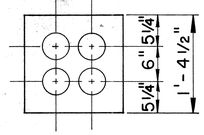

2 WIDE X 2 HIGH

$\left(\frac{T}{4F-2}\right)$

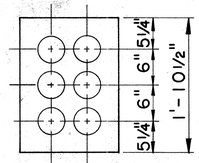

2 WIDE X 3 HIGH

$\left(\frac{T}{6F-2}\right)$

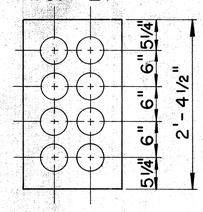

2 WIDE X 4 HIGH

$\left(\frac{T}{8F-2}\right)$

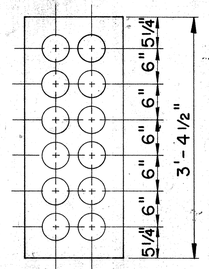

2 WIDE X 6 HIGH

$\left(\frac{T}{12F-2}\right)$

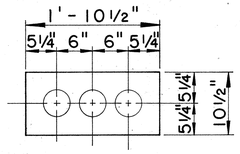

3 DUCTS

$\left(\frac{T}{3F-3}\right)$

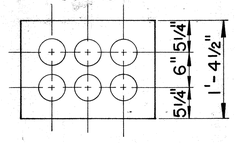

3 WIDE X 2 HIGH

$\left(\frac{T}{6F-3}\right)$

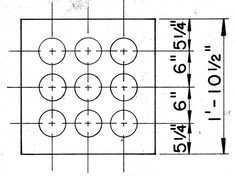

3 WIDE X 3 HIGH

$\left(\frac{T}{9F-3}\right)$

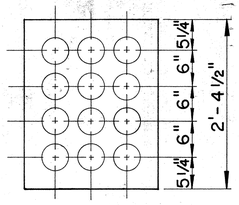

3 WIDE X 4 HIGH

$\left(\frac{T}{12F-3}\right)$

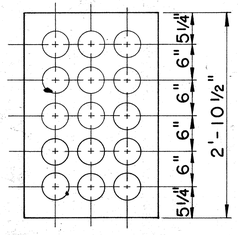

3 WIDE X 5 HIGH

$\left(\frac{T}{15F-3}\right)$

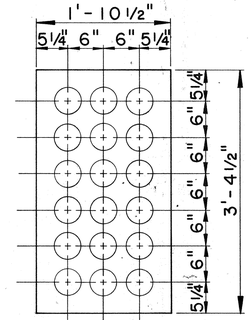

3 WIDE X 6 HIGH

$\left(\frac{T}{18F-3}\right)$

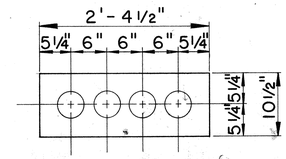

4 DUCTS

$\left(\frac{T}{4F-4}\right)$

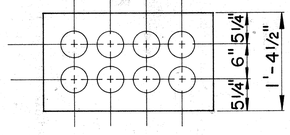

4 WIDE X 2 HIGH

$\left(\frac{T}{8F-4}\right)$

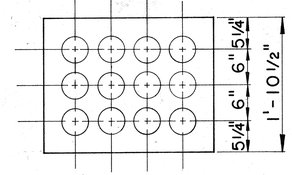

4 WIDE X 3 HIGH

$\left(\frac{T}{12F-4}\right)$

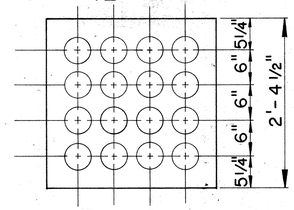

4 WIDE X 4 HIGH

$\left(\frac{T}{16F-4}\right)$

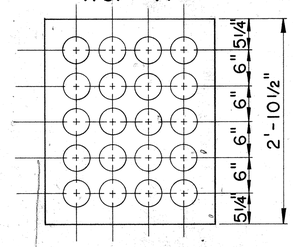

4 WIDE X 5 HIGH

$\left(\frac{T}{20F-4}\right)$

STANDARD DUCT FORMATIONS

Scale: 1" = 1'-0"

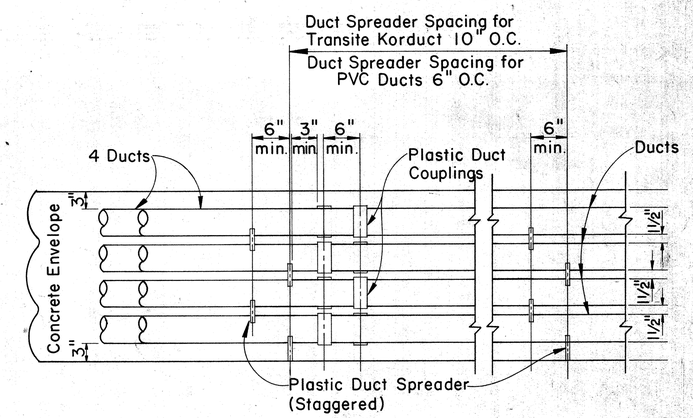

TYPICAL DUCT ENVELOPE ELEVATION
ARRANGEMENT OF COUPLING & PLASTIC SPACERS

Scale: 1" = 1'-0"

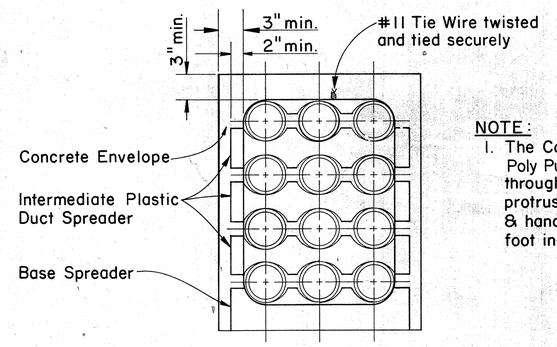

NOTE:

1. The Contractor shall place 1/8" Poly Pull Line in designated duct throughout its entire length with protrusions of 2 feet in manholes & handholes at each end and 1 foot in pullboxes.

SECTION SHOWING SPACERS

Scale: 1 1/2" = 1'-0"

$\left(\frac{T}{20F-4}\right)$

- T — Denotes H.T. Co.
- 20 — Denotes Number of ducts bottom layer
- F — Denotes 4 inch ducts
- 4 — Denotes Total Number Of Ducts

SYMBOL IDENTIFICATION

APPROVED:

B. Yoshihara — 8-15-77

Hawaiian Telephone Co., — Date

H.T. Co., — Drawing No. 34028-A

STATE OF HAWAII
DEPARTMENT OF TRANSPORTATION
LAND TRANSPORTATION FACILITIES DIVISION

STANDARD DUCT FORMATIONS
(TELEPHONE)

Scale: As Shown — Date: Aug. 31, 1977

SHEET No. U-15 OF U-23 SHEETS

ORIGINAL PLAN	SURVEY PLOTTED BY	DATE
	DRAWN BY	" "
	TRACED BY	" "
NOTE BOOK	DESIGNED BY	" "
	QUANTITIES BY	" "
No.	CHECKED BY	" "

FED. ROAD DIST. NO.	STATE	FED. AID PROJ. NO.	FISCAL YEAR	SHEET NO.	TOTAL SHEETS
HAWAII	HAW.	I-H1-1(131):17	1977	188	394

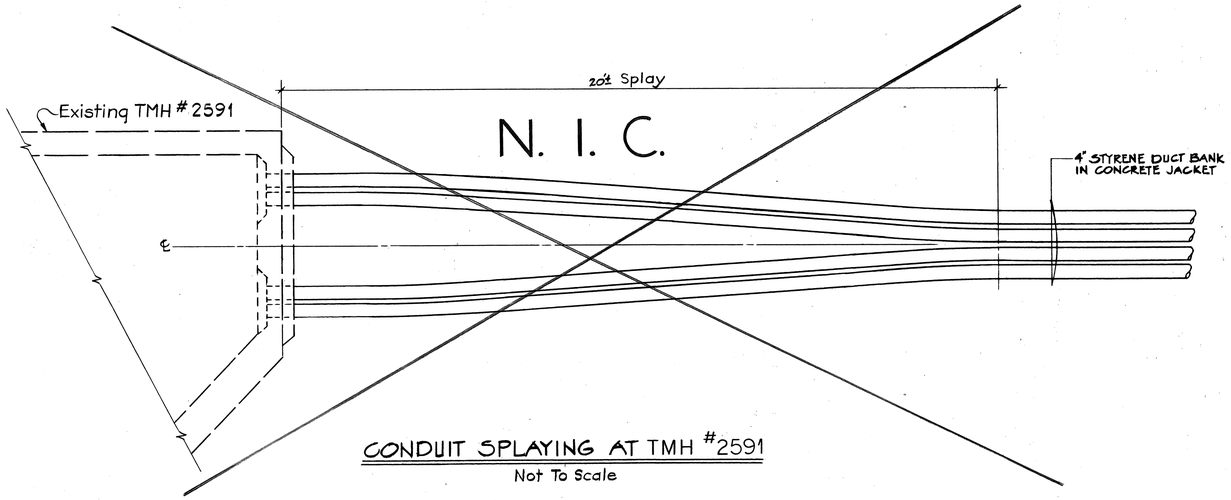

CONDUIT SPLAYING AT TMH #2591
Not To Scale

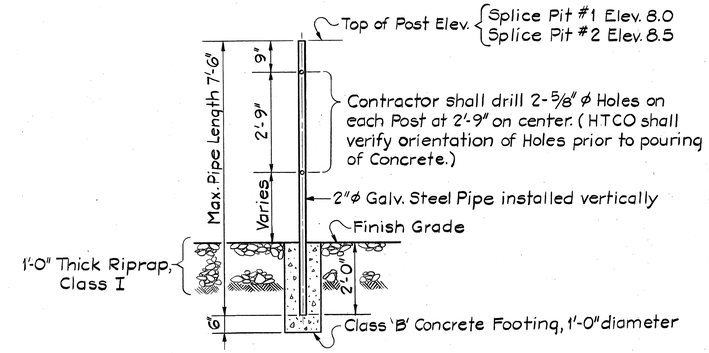

CABLE RACK POST DETAIL
Not To Scale

NOTE 1. The Contractor Shall place a Poly Pull Line wire in designated duct throughout its entire length with protrusions of 2 feet in manhole.

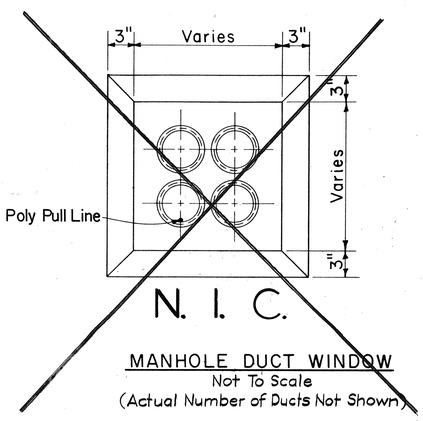

MANHOLE DUCT WINDOW
Not To Scale
(Actual Number of Ducts Not Shown)

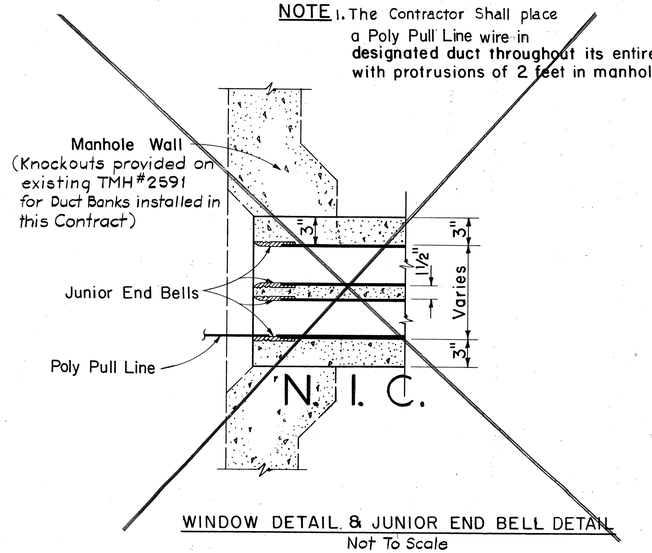

WINDOW DETAIL & JUNIOR END BELL DETAIL
Not To Scale
(Actual Number of Ducts Not Shown)

ORIGINAL PLAN		
	SURVEY PLOTTED BY	DATE
	DRAWN BY	"
	TRACED BY	"
	DESIGNED BY	"
NOTE BOOK	QUANTITIES BY	"
No.	CHECKED BY	"

APPROVED:
B. Yoshihara 8-15-77
HAWAIIAN TELEPHONE CO., DATE

WERNER BEUGGERT REGISTERED PROFESSIONAL ENGINEER No. 3383-E HAWAII, U.S.A.

THIS WORK WAS PREPARED BY ME OR UNDER MY SUPERVISION.
Werner Beuggert

STATE OF HAWAII
DEPARTMENT OF TRANSPORTATION
HIGHWAYS DIVISION

MISCELLANEOUS TELEPHONE DETAILS

INTERSTATE ROUTE H-1
PROJECT NO. I-H1-1(131):17

SCALE: AS SHOWN DATE: AUG. 31, 1977

SHEET No. U-16 OF U-23 SHEETS

188

FED. ROAD DIST. NO.	STATE	FED. AID PROJ. NO.	FISCAL YEAR	SHEET NO.	TOTAL SHEETS
HAWAII	HAW.	I-HI-I(131):17	1977	189	394

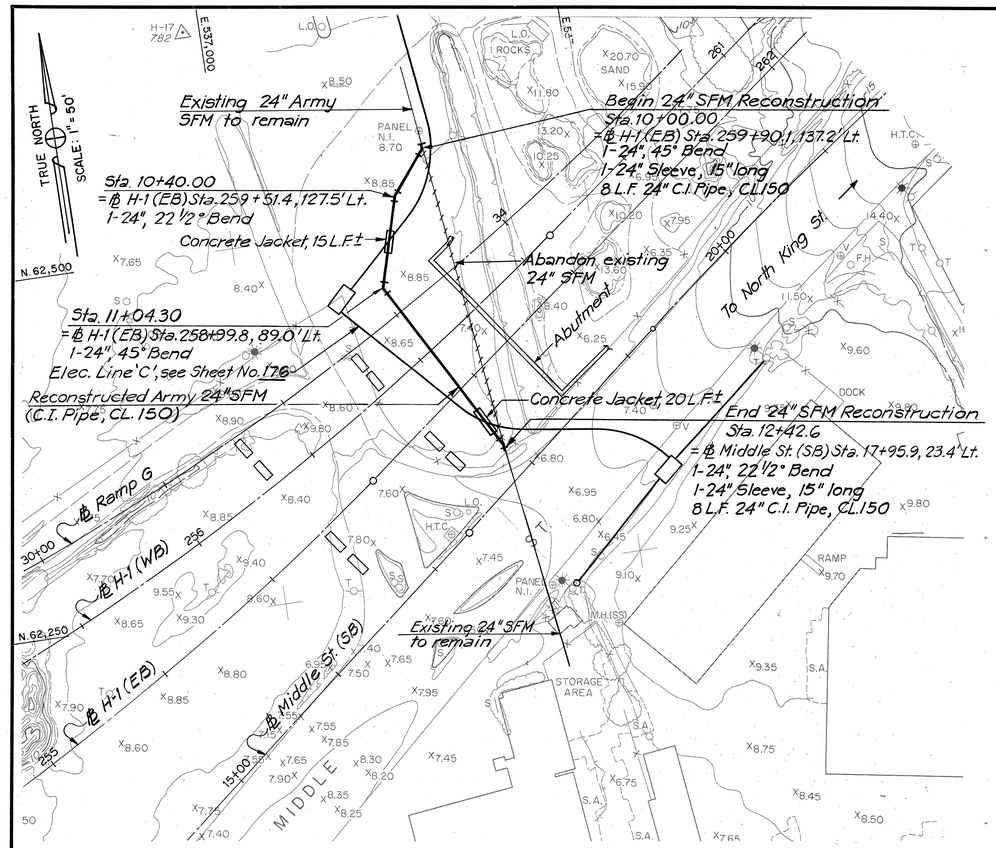

PLAN – 24" ARMY SEWER FORCE MAIN RECONSTRUCTION

Scale: 1" = 50'

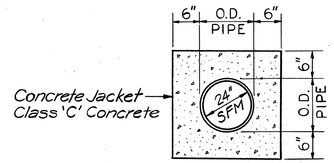

CONCRETE JACKET DETAIL

Scale: 3/4" = 1'-0"

NOTES:

1. The Contractor shall notify Mr. Sanford Haseyama (Tel. 438-1394) of Directorate of Facilities Engineering fourteen (14) days prior to commencement of sewer work. Interruptions to the sewage pumping station's operations shall be coordinated with Mr. Haseyama.

2. The Contractor shall have two work crews, one at each end of the line to make the connection simultaneously. If the Contractor is not properly prepared, the scheduled outage shall be cancelled. The Contractor shall be allowed a maximum shutdown time of 6 hours between midnight and 6:00 A.M. to make the connections into the existing main.

3. In the event that any changes in alignment or grade for the proposed sewer are required due to unforeseen obstacles the Contractor shall immediately notify the Engineer and provide the Engineer the necessary data in order that the Engineer will be able to determine what changes in alignment or grade are required.

4. Working pressure of the sewer main is 15 psi. Test pressure shall be 25 psi.

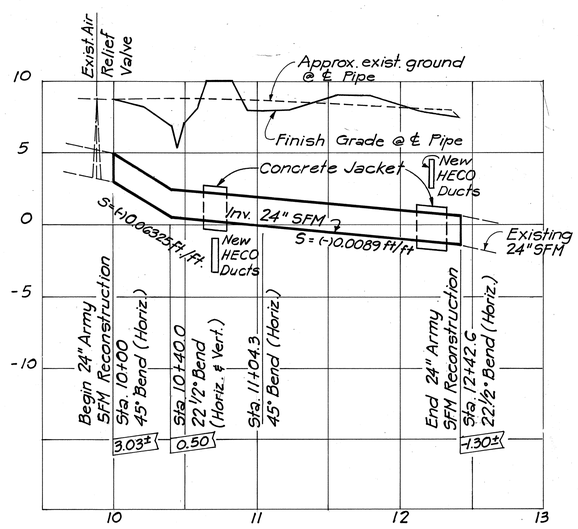

PROFILE – 24" SFM RECONSTRUCTION

Scale: Horiz. 1" = 50'
Vert. 1" = 5'

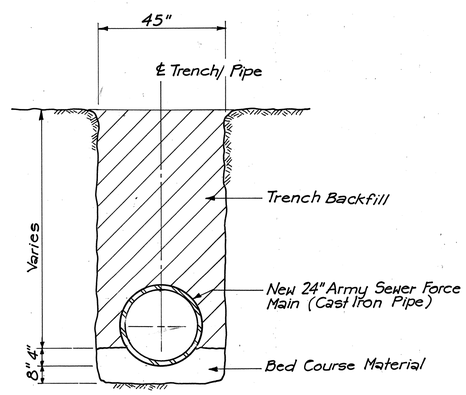

TYPICAL TRENCH DETAIL

N.T.S.

ORIGINAL PLAN	SURVEY PLOTTED BY
	DRAWN BY
	TRACED BY
NOTE BOOK	DESIGNED BY
No.	QUANTITIES BY
	CHECKED BY
	DATE

APPROVED:

Director of Facilities Engineering — 27 July 77 — DATE

WERNER BEUGGERT REGISTERED PROFESSIONAL ENGINEER No. 3383-E HAWAII, U.S.A.

THIS WORK WAS PREPARED BY ME OR UNDER MY SUPERVISION.

STATE OF HAWAII
DEPARTMENT OF TRANSPORTATION
HIGHWAYS DIVISION

RECONSTRUCTION OF 24" ARMY SEWER FORCE MAIN

INTERSTATE ROUTE H-1
PROJECT NO. I-HI-1(131):17

SCALE: AS SHOWN — DATE:

SHEET No. U-17 OF U-23 SHEETS

FED. ROAD DIST. NO.	STATE	FED. AID PROJ. NO.	FISCAL YEAR	SHEET NO.	TOTAL SHEETS
HAWAII	HAW.	I-HI-I(131):17	1977	190	394

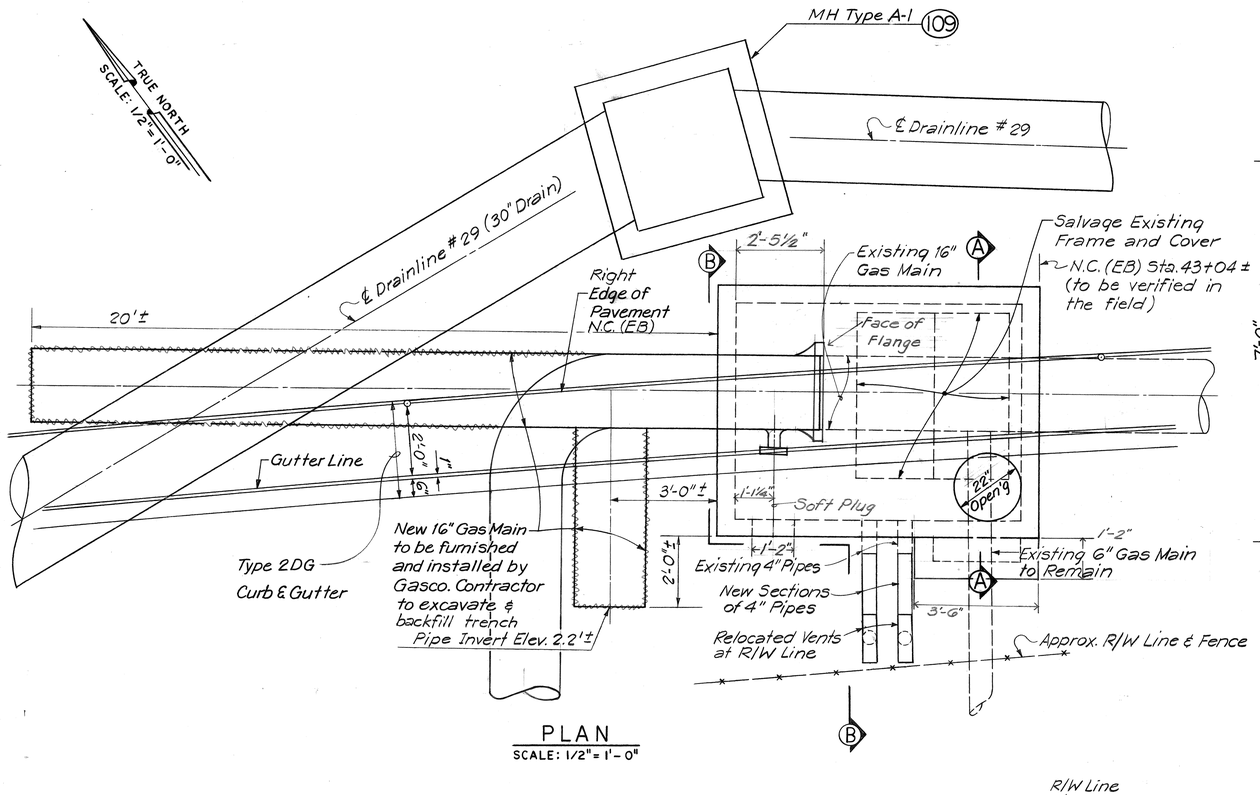

PLAN
SCALE: 1/2" = 1'-0"

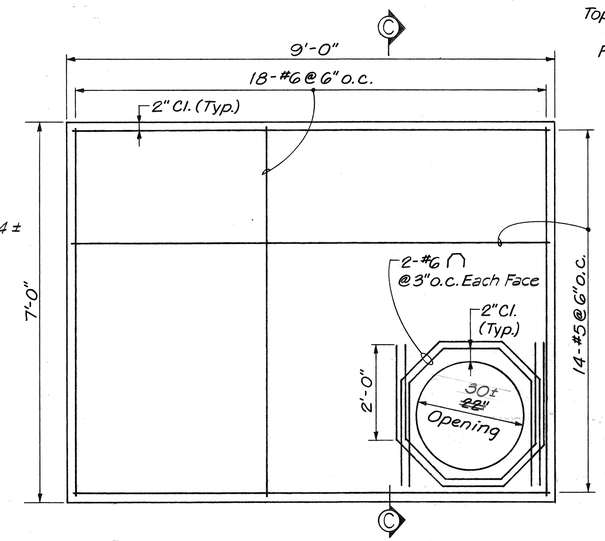

ROOF SLAB REINFORCING PLAN
SCALE: 3/4" = 1'-0"

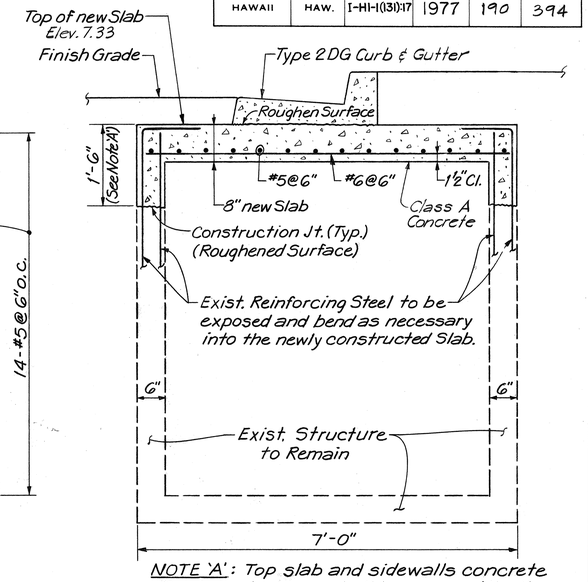

NOTE 'A': Top slab and sidewalls concrete of exist. structure shall be removed to the depth as shown. All the reinforcing steel in sidewalls shall remain and be exposed before constructing the new roof slab.

SECTION C-C
SCALE: 3/4" = 1'-0"

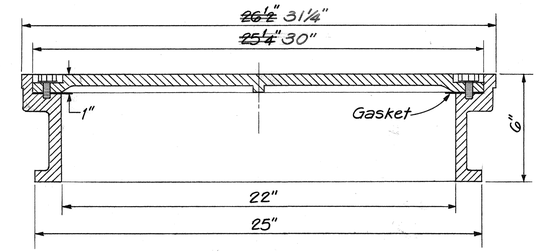

GAS MANHOLE FRAME DETAIL
SCALE: 3" = 1'-0"

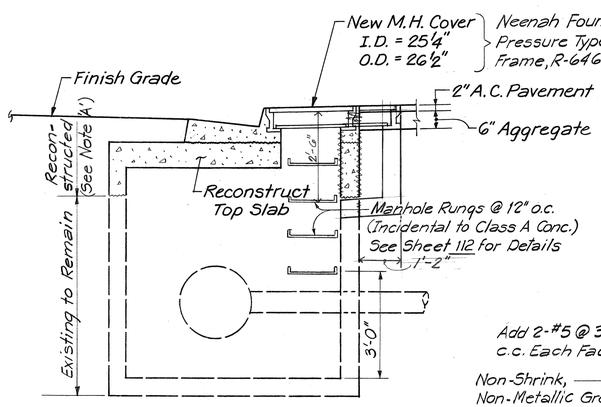

SECTION A-A
SCALE: 1/2" = 1'-0"

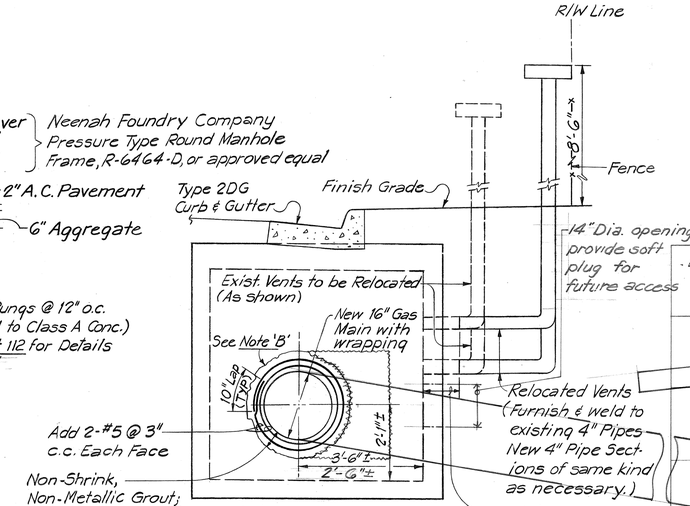

NOTE 'B': Contractor shall break out ~~3'-0" dia.~~ holes. Expose and cut back reinforcement as necessary in order to allow GASCO to install pipe through wall. ~~&~~ 1-14" Dia. Soft Plug Contractor shall seal hole by grouting against pipe.

SECTION B-B
SCALE: 1/2" = 1'-0"

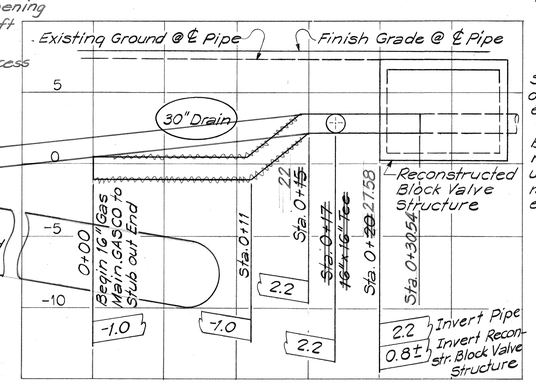

PROFILE-16" GAS MAIN
SCALE: HORIZ: 1" = 5'
VERT: 1 = 5'

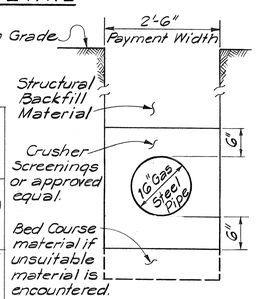

GAS TRENCH DETAIL
NTS

WERNER BEUGGERT REGISTERED PROFESSIONAL ENGINEER No. 3383-E HAWAII, U.S.A.

THIS WORK WAS PREPARED BY ME OR UNDER MY SUPERVISION.

APPROVED:

GASCO, INC. — DATE 8/4/77

STATE OF HAWAII
DEPARTMENT OF TRANSPORTATION
HIGHWAYS DIVISION

RECONSTRUCTED GASCO BLOCK VALVE STRUCTURE

INTERSTATE ROUTE H-1
PROJECT NO. I-HI-1 (131): 17

SCALE: AS SHOWN — DATE: AUG. 31, 1977

SHEET No. U-18 OF U-23 SHEETS

ORIGINAL PLAN | SURVEY PLOTTED BY | DRAWN BY | TRACED BY | DESIGNED BY | QUANTITIES BY | CHECKED BY | DATE | NOTE BOOK | NO.

FED. ROAD DIST. NO.	STATE	FED. AID PROJ. NO.	FISCAL YEAR	SHEET NO.	TOTAL SHEETS
HAWAII	HAW.	I-H1-1(131)17	1977	191	394

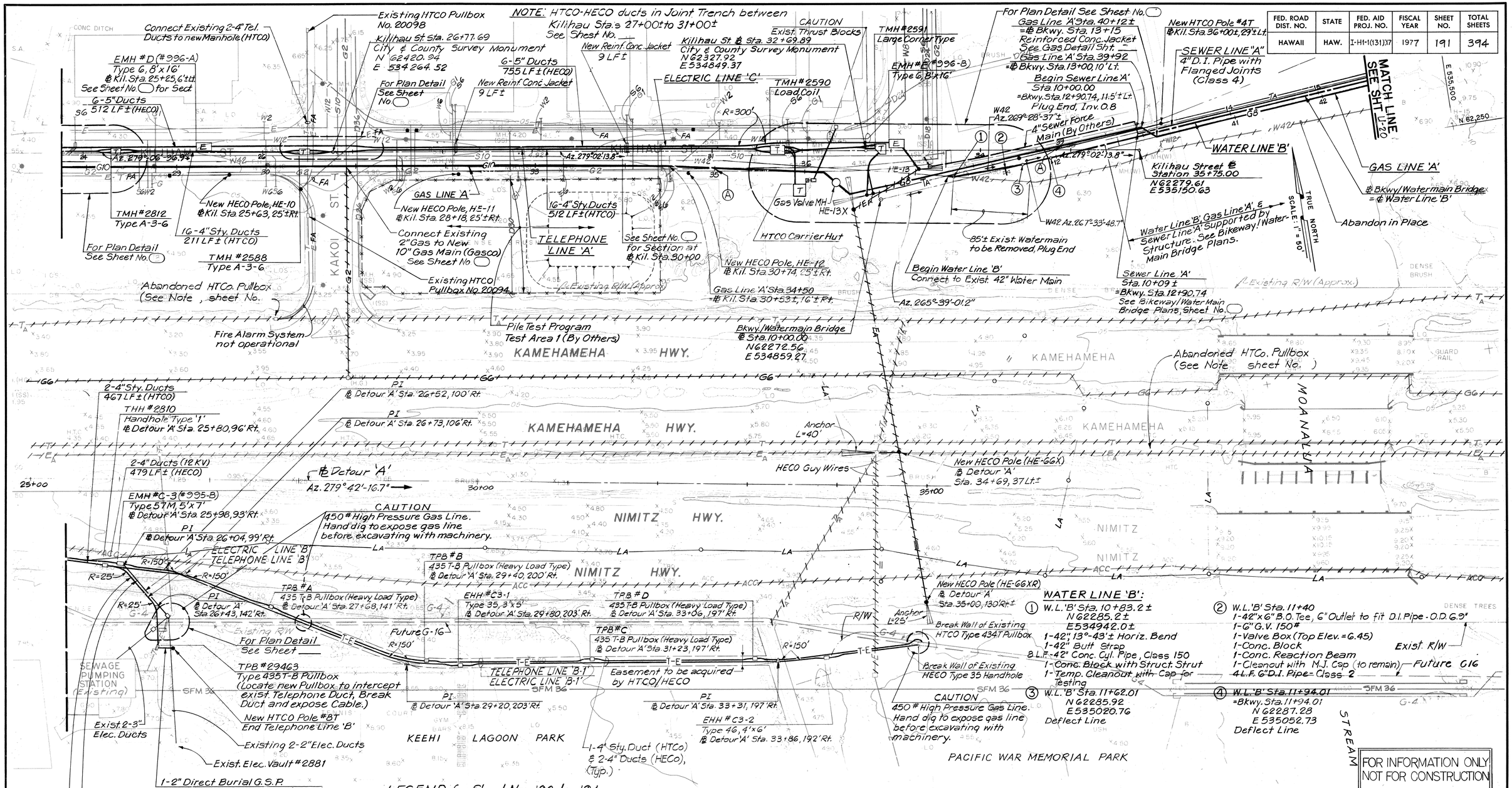

WATER LINE 'B':

① W.L. 'B' Sta. 10+83.2±
N 62285.2±
E 534942.0±
1-42", 13°-43'± Horiz. Bend
1-42" Butt Strap
8 L.F. 42" Conc. Cyl. Pipe, Class 150
1-Conc. Block with Struct. Strut
1-Temp. Cleanout with Cap for Testing

② W.L. 'B' Sta. 11+40
1-42"x6" B.O. Tee, 6" Outlet to fit D.I. Pipe - O.D. 6.9"
1-6" G.V. 150#
1-Valve Box (Top Elev. = 6.45)
1-Conc. Block
1-Conc. Reaction Beam
1-Cleanout with M.J. Cap (to remain)
4 L.F. 6" D.I. Pipe - Class 2

③ W.L. 'B' Sta. 11+62.01
N 62285.92
E 535020.76
Deflect Line

④ W.L. 'B' Sta. 11+94.01
= Bkwy. Sta. 11+94.01
N 62287.28
E 535052.73
Deflect Line

LEGEND for Sheet No's 190 to 194

EXISTING FACILITIES	
FACILITIES UNDER CONSTRUCTION (BY OTHERS)	
FUTURE FACILITIES	
EXISTING FACILITIES TO BE: REMOVED, DEMOLISHED, ABANDONED OR RELOCATED WHEN NEW LINES ARE IN SERVICE	
TELEPHONE - UNDERGROUND (HTCO.)	T
TELEPHONE - AERIAL (HTCO)	TA
ELECTRIC - UNDERGROUND (HECO)	E
ELECTRIC - AERIAL	EA
WATER (B.W.S.)	W24
GAS (GASCO, INC.)	G10
ARMY COMMUNICATIONS CABLE	ACC
SANITARY SEWER (CITY)	SG
FIRE ALARM-UNDERGROUND (CITY)	FA
FIRE ALARM-AERIAL (CITY)	FAA
LIGHTING SYSTEM-AERIAL	LA
DRAINLINE	D24
EXISTING POLE	○
NEW POLE (BY OTHERS)	●

ORIGINAL PLAN		DATE
	SURVEY PLOTTED BY	
	DRAWN BY	
	TRACED BY	
NOTE BOOK	DESIGNED BY	
	QUANTITIES BY	
No.	CHECKED BY	

WERNER BEUGGERT REGISTERED PROFESSIONAL ENGINEER No. 3383-E HAWAII, U.S.A.

THIS WORK WAS PREPARED BY ME OR UNDER MY SUPERVISION.

FOR INFORMATION ONLY NOT FOR CONSTRUCTION

STATE OF HAWAII
DEPARTMENT OF TRANSPORTATION
HIGHWAYS DIVISION

KEEHI INTERCHANGE
UTILITIES LOCATION MAP
(EXISTING & UNDER CONSTRUCTION)
INTERSTATE ROUTE H-1
PROJECT NO. I-H1-1(131)17

SCALE: 1" = 50' DATE: AUG. 31, 1977

SHEET No. U-19 OF U-23 SHEETS

FED. ROAD DIST. NO.	STATE	FED. AID PROJ. NO.	FISCAL YEAR	SHEET NO.	TOTAL SHEETS
HAWAII	HAW.	I-H1-1(131).17	1977	192	394

CURVE DATA TABLE					
NO.	N. COORDINATE	E. COORDINATE	DATA		
32	PC	617549.4	536655.08	Δ	50°-6'-5.7"
	PT	619833.2	536766.38	R	300'
	CC	617507.07	536955.04	L	262.33
	PI	618951.4	536657.36	T	140.22
36	PC	623493.7	536858.40	Δ	31°-13'-16.7"
	PT	622690.4	536380.73	R	900'
	CC	623640.0	536475.80	L	490.42
	PI	622424.7	536630.79	T	251.47

AREA FOR STOCKPILING SURPLUS MATERIAL SUITABLE FOR EMBANKMENTS

NOTES:
1. Stockpiles shall not exceed 7' in height.
2. Contractor shall take necessary precautions for the prevention of damage to utility installations, such as guy wires, anchors and poles.

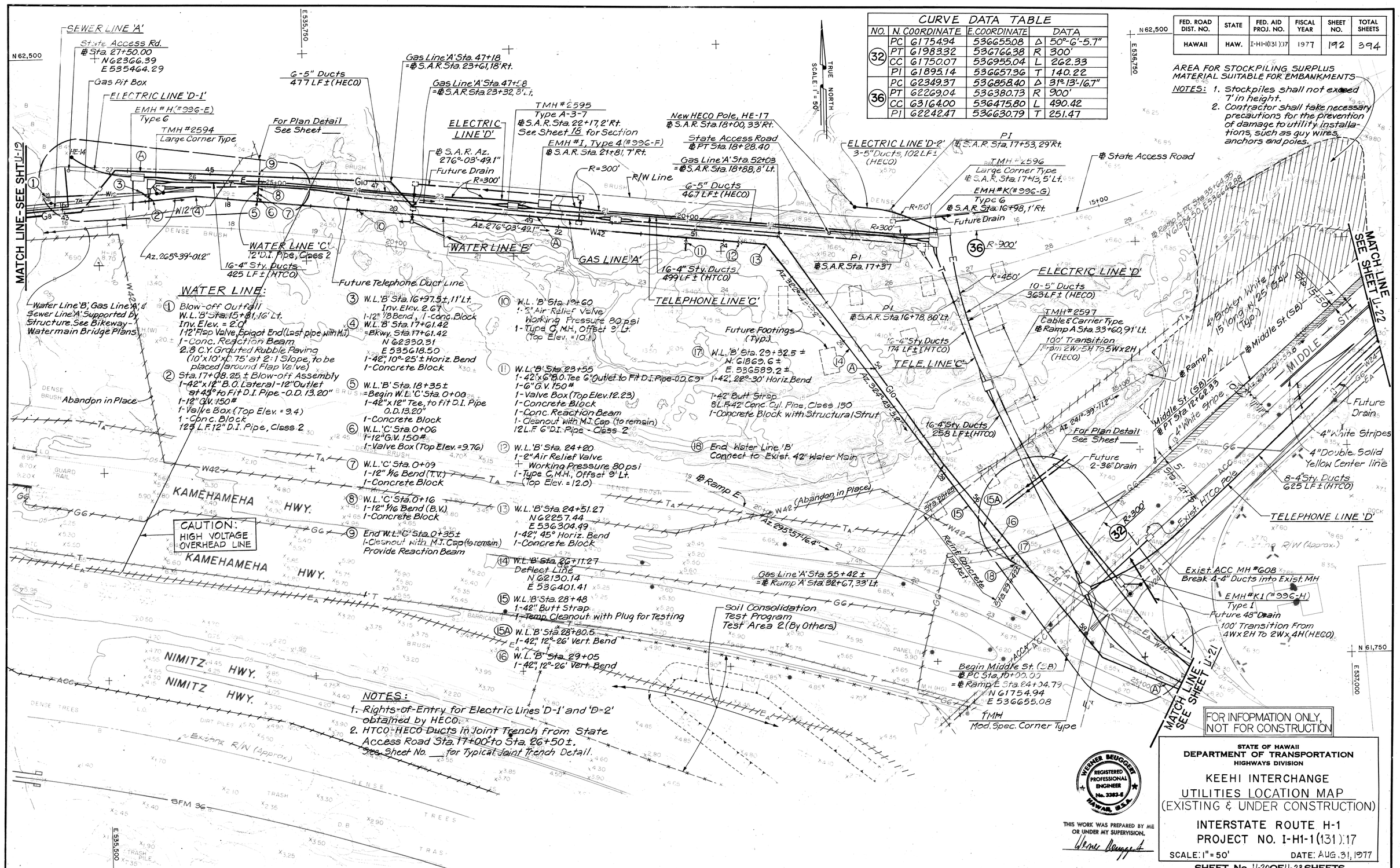

WATER LINE:

1. Blow-off Outfall
W.L. 'B' Sta. 15+81, 16' Lt.
Inv. Elev. = 2.0'
1-12" Flap Valve, Spigot End (Last pipe with M.J.)
1-Conc. Reaction Beam
2.8 C.Y. Grouted Rubble Paving (10'x10'x0.75' at 2:1 Slope, to be placed around Flap Valve)

2. Sta. 17+08.25 ± Blow-off Assembly
1-42"x12" B.O. Lateral-12" Outlet at 45° to Fit D.I. Pipe-O.D. 13.20"
1-12" G.V. 150#
1-Valve Box (Top Elev. = 9.4)
1-Conc. Block
125 L.F. 12" D.I. Pipe, Class 2

3. W.L. 'B' Sta. 16+97.5 ±, 11' Lt.
Inv. Elev. 2.67
1-12" 1/8 Bend, 1-Conc. Block

4. W.L. 'B' Sta. 17+61.42 = Bkwy. Sta. 17+61.42
N 623330.31
E 535618.50
1-42", 10°-25' ± Horiz. Bend
1-Concrete Block

5. W.L. 'B' Sta. 18+35 ± = Begin W.L. 'C' Sta. 0+00
1-42"x12" Tee, to fit D.I. Pipe O.D. 13.20"
1-Concrete Block

6. W.L. 'C' Sta. 0+06
1-12" G.V. 150#
1-Valve Box (Top Elev. = 9.76)

7. W.L. 'C' Sta. 0+09
1-12" 1/16 Bend (T.V.)
1-Concrete Block

8. W.L. 'C' Sta. 0+16
1-12" 1/16 Bend (B.V.)
1-Concrete Block

9. End W.L. 'C' Sta. 0+35 ±
1-Cleanout with M.J. Cap (to remain)
Provide Reaction Beam

10. W.L. 'B' Sta. 19+60
1-2" Air Relief Valve
Working Pressure 80 psi
1-Type C, M.H., Offset 9' Lt.
(Top Elev. = 10.1)

11. W.L. 'B' Sta. 23+55
1-42"x6" B.O. Tee 6" Outlet to Fit D.I. Pipe-O.D. 6.9"
1-6" G.V. 150#
1-Valve Box (Top Elev. 12.23)
1-Concrete Block
1-Conc. Reaction Beam
1-Cleanout with M.J. Cap (to remain)
12 L.F. 6" D.I. Pipe - Class 2

12. W.L. 'B' Sta. 24+20
1-2" Air Relief Valve
Working Pressure 80 psi
1-Type C, M.H., Offset 9' Lt.
(Top Elev. = 12.0)

13. W.L. 'B' Sta. 24+51.27
N 622257.44
E 536304.49
1-42", 45° Horiz. Bend
1-Concrete Block

14. W.L. 'B' Sta. 26+11.27
Deflect Line
N 621301.14
E 536401.41

15. W.L. 'B' Sta. 28+48
1-42" Butt Strap
1-Temp. Cleanout with Plug for Testing

15A. W.L. 'B' Sta. 28+80.5
1-42", 12°-26' Vert. Bend

16. W.L. 'B' Sta. 29+05
1-42", 12°-26' Vert. Bend

17. W.L. 'B' Sta. 29+32.5 ±
N 618639.6 ±
E 536589.2 ±
1-42", 22°-30' Horiz. Bend
1-42" Butt Strap
8 L.F. 42" Conc. Cyl. Pipe, Class 150
1-Concrete Block with Structural Strut

18. End Water Line 'B'
Connect to Exist. 42" Water Main

NOTES:

1. Rights-of-Entry for Electric Lines 'D-1' and 'D-2' obtained by HECO.
2. HTCO-HECO Ducts in Joint Trench from State Access Road Sta. 17+00 ± to Sta. 26+50 ±. See Sheet No. ___ for Typical Joint Trench Detail.

ORIGINAL PLAN		DATE
	SURVEY PLOTTED BY	
	DRAWN BY	
	TRACED BY	
NOTE BOOK	DESIGNED BY	
No.	QUANTITIES BY	
	CHECKED BY	

FOR INFOPMATION ONLY, NOT FOR CONSTRUCTION

WERNER BEUGGER
REGISTERED PROFESSIONAL ENGINEER
No. 3383-E
HAWAII, U.S.A.

THIS WORK WAS PREPARED BY ME OR UNDER MY SUPERVISION.

STATE OF HAWAII
DEPARTMENT OF TRANSPORTATION
HIGHWAYS DIVISION

KEEHI INTERCHANGE
UTILITIES LOCATION MAP
(EXISTING & UNDER CONSTRUCTION)

INTERSTATE ROUTE H-1
PROJECT NO. I-H1-1(131).17

SCALE: 1" = 50' DATE: AUG. 31, 1977

SHEET No. U-20 OF U-23 SHEETS

FED. ROAD DIST. NO.	STATE	FED. AID PROJ. NO.	FISCAL YEAR	SHEET NO.	TOTAL SHEETS
HAWAII	HAW.	I-HH(131):17	1977	193	394

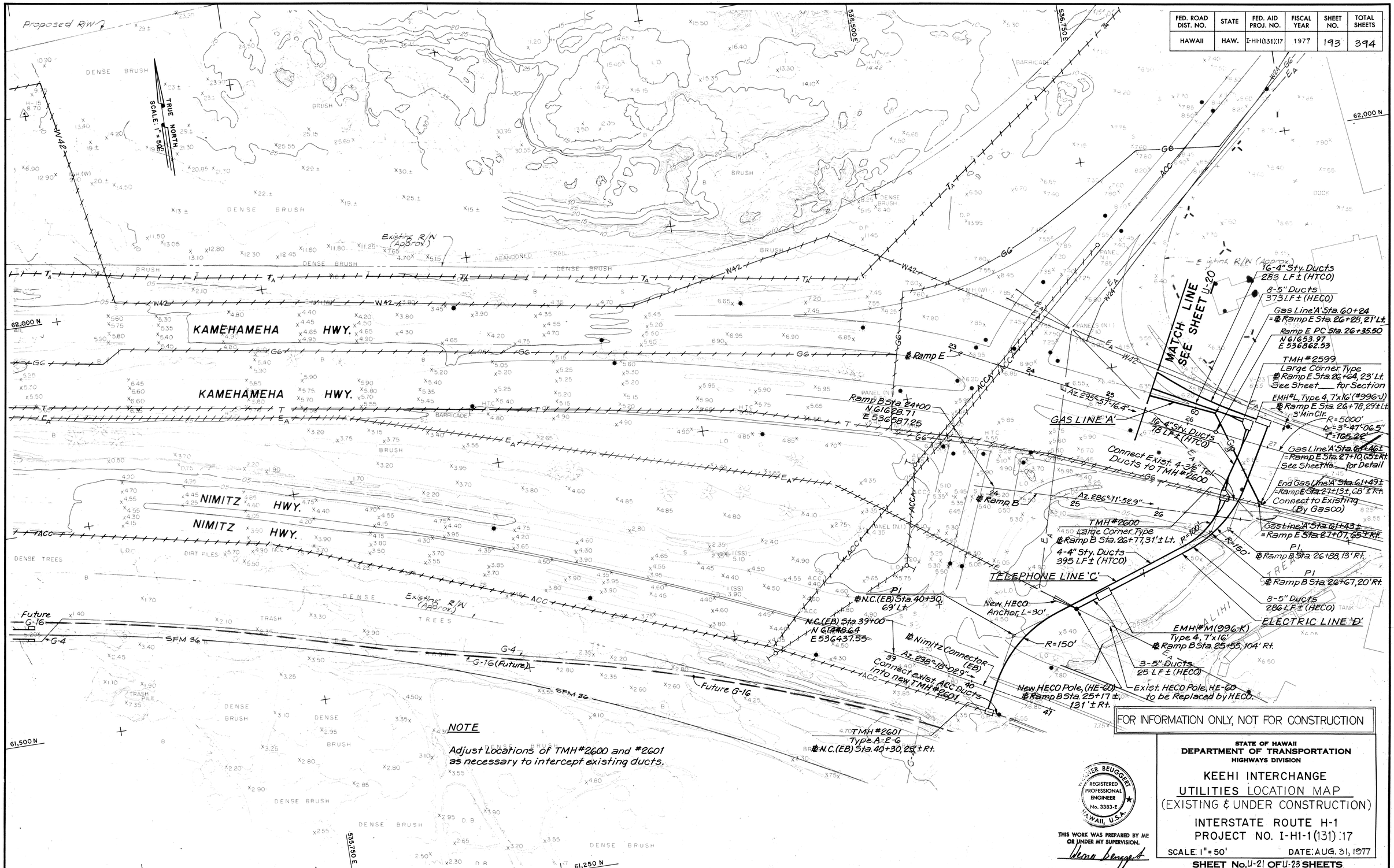

FOR INFORMATION ONLY, NOT FOR CONSTRUCTION

STATE OF HAWAII
DEPARTMENT OF TRANSPORTATION
HIGHWAYS DIVISION

KEEHI INTERCHANGE
UTILITIES LOCATION MAP
(EXISTING & UNDER CONSTRUCTION)

INTERSTATE ROUTE H-1
PROJECT NO. I-H1-1(131):17

SCALE: 1" = 50' DATE: AUG. 31, 1977

SHEET No. U-21 OF U-23 SHEETS

WERNER BEUGGERT
REGISTERED PROFESSIONAL ENGINEER
No. 3383-E
HAWAII, U.S.A.

THIS WORK WAS PREPARED BY ME OR UNDER MY SUPERVISION.

Werner Beuggert

ORIGINAL PLAN		DATE
	SURVEY PLOTTED BY	
	DRAWN BY	
	TRACED BY	
	DESIGNED BY	
NOTE BOOK	COMPUTED BY	
No.	CHECKED BY	

FED. ROAD DIST. NO.	STATE	FED. AID PROJ. NO.	FISCAL YEAR	SHEET NO.	TOTAL SHEETS
HAWAII	HAW.	I-HI-1(131).17	1977	194	394

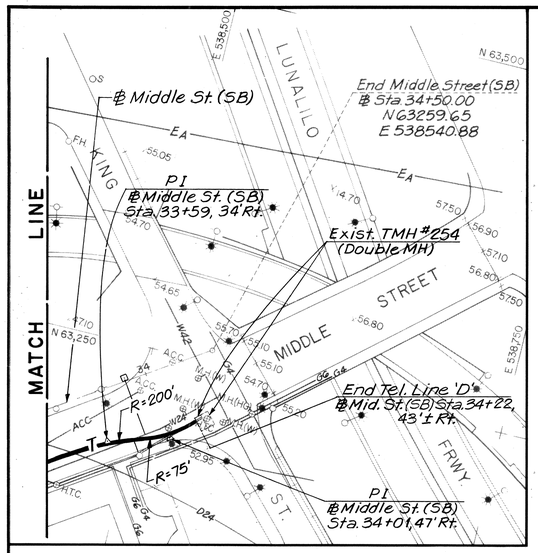

INSERT

CURVE DATA TABLE

NO.		N. COORDINATE	E. COORDINATE	DATA	
33	PC	62400.82	537282.54	Δ	5°-6'-2.2"
	PT	62559.31	537497.38	R	3000
	CC	60068.32	539169.19	L	267.07
	PI	62484.85	537386.43	T	133.62

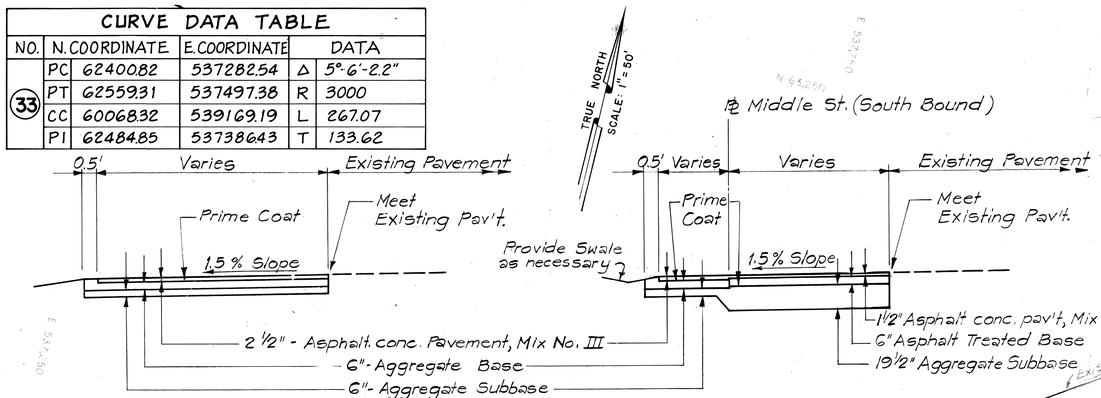

SOUTH BOUND STA. 12+00 ± TO STA. 28+00 ± SOUTH BOUND STA. 28+00 ± TO STA. 32+40 ±

TYPICAL SECTIONS OF MIDDLE ST. DETOUR

N.T.S.

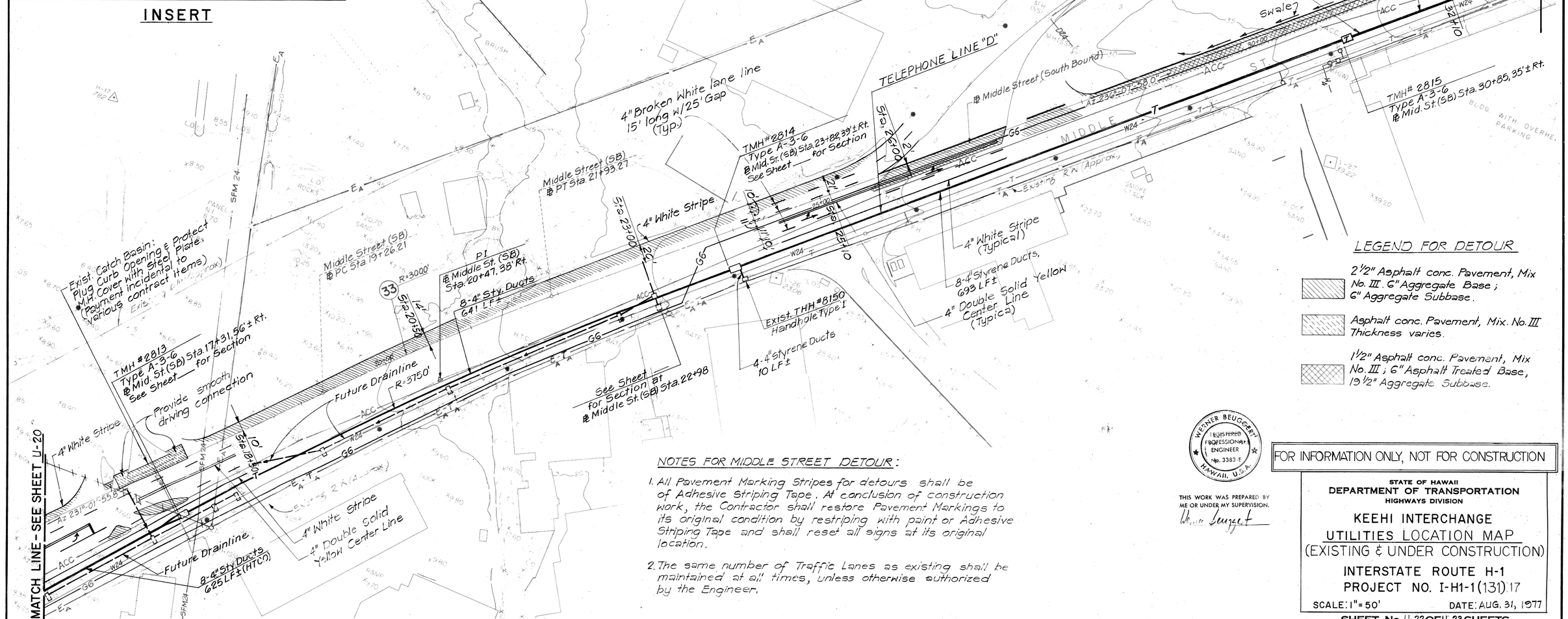

LEGEND FOR DETOUR

- 2 1/2" Asphalt conc. Pavement, Mix No. III. 6" Aggregate Base; 6" Aggregate Subbase.
- Asphalt conc. Pavement, Mix. No. III Thickness varies.
- 1 1/2" Asphalt conc. Pavement, Mix No. III; 6" Asphalt Treated Base, 19 1/2" Aggregate Subbase.

NOTES FOR MIDDLE STREET DETOUR:

1. All Pavement Marking Stripes for detours shall be of Adhesive Striping Tape. At conclusion of construction work, the Contractor shall restore Pavement Markings to its original condition by restriping with paint or Adhesive Striping Tape and shall reset all signs at its original location.
2. The same number of Traffic Lanes as existing shall be maintained at all times, unless otherwise authorized by the Engineer.

WERNER BEUGEART REGISTERED PROFESSIONAL ENGINEER No. 3383-E HAWAII, U.S.A.

THIS WORK WAS PREPARED BY ME OR UNDER MY SUPERVISION.

FOR INFORMATION ONLY, NOT FOR CONSTRUCTION

STATE OF HAWAII
DEPARTMENT OF TRANSPORTATION
HIGHWAYS DIVISION

KEEHI INTERCHANGE
UTILITIES LOCATION MAP
(EXISTING & UNDER CONSTRUCTION)
INTERSTATE ROUTE H-1
PROJECT NO. I-H1-1(131).17

SCALE: 1" = 50' DATE: AUG. 31, 1977

SHEET No. U-22 OF U-23 SHEETS

ORIGINAL PLAN		
	SURVEY PLOTTED BY	DATE
	DRAWN BY	"
	TRACED BY	"
NOTE BOOK	DESIGNED BY	"
	QUANTITIES BY	"
No.	CHECKED BY	"

FED. ROAD DIST. NO.	STATE	FED. AID PROJ. NO.	FISCAL YEAR	SHEET NO.	TOTAL SHEETS
HAWAII	HAW.	I-H1-1(131).17	1977	195	394

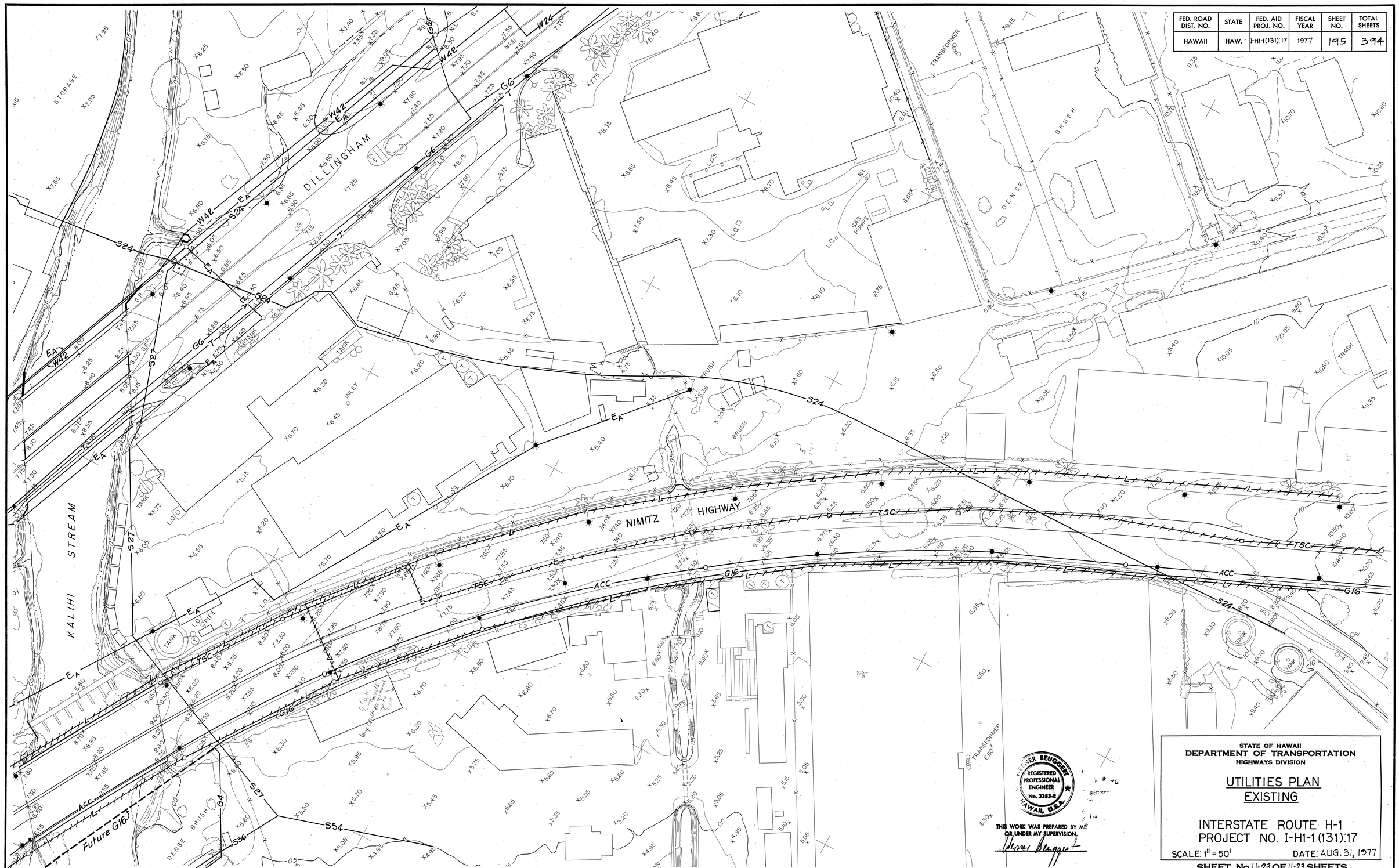

ORIGINAL PLAN		DATE
	SURVEY PLOTTED BY	
	DRAWN BY	
	TRACED BY	
	DESIGNED BY	
NOTE BOOK	QUANTITIES BY	
No.	CHECKED BY	

REGISTERED PROFESSIONAL ENGINEER No. 3383-E HAWAII, U.S.A.

THIS WORK WAS PREPARED BY ME OR UNDER MY SUPERVISION.

STATE OF HAWAII
DEPARTMENT OF TRANSPORTATION
HIGHWAYS DIVISION

UTILITIES PLAN
EXISTING

INTERSTATE ROUTE H-1
PROJECT NO. I-H1-1(131).17

SCALE: 1" = 50' DATE: AUG. 31, 1977

SHEET No. U-23 OF U-23 SHEETS