| FED. ROAD DIST. NO. | STATE | FED. AID PROJ. NO. | FISCAL YEAR | SHEET NO. | TOTAL SHEETS |
|---|---|---|---|---|---|
| HAWAII | HAW. | I-HI-1(131):17 | 1977 | 332 | |

1. GENERAL SPECIFICATIONS: HAWAII DEPARTMENT OF TRANSPORTATION, STANDARD SPECIFICATIONS FOR ROAD AND BRIDGE CONSTRUCTION, 1976, TOGETHER WITH SPECIAL PROVISIONS PREPARED FOR THIS CONTRACT.
2. DESIGN SPECIFICATIONS: A.A.S.H.T.O. 1973 STANDARD SPECIFICATIONS FOR HIGHWAY BRIDGES AND ITS SUBSEQUENT INTERIM SPECIFICATIONS.
3. LOADS:
   (A) DEAD LOAD: AN ALLOWANCE OF 18 P.S.F. FOR FUTURE WEARING SURFACE OF ASPHALT CONCRETE HAS BEEN PROVIDED FOR IN THE DESIGN.
   (B) LIVE LOAD: HS20-44 OR INTERSTATE LOADING.
4. MATERIALS:
   (A) ALL CONCRETE SHALL BE CLASS A UNLESS OTHERWISE NOTED.
   (B) ALL REINFORCING STEEL SHALL BE A.S.T.M. A615, GRADE 40 UNLESS OTHERWISE NOTED.
   (C) ALL STRUCTURAL STEEL SHALL BE A.S.T.M. A-36, HOT DIP GALVANIZED, UNLESS OTHERWISE NOTED.
   (D) ALL ANCHOR BOLTS, WASHERS AND NUTS SHALL BE A.S.T.M. A-307, HOT DIP GALVANIZED, UNLESS OTHERWISE SPECIFIED.
   (E) FOR MATERIALS OF PRESTRESSED CONCRETE BEAM SEE PRESTRESSED CONCRETE NOTES.
5. DESIGN STRESSES: SHALL FOLLOW A.A.S.H.T.O. STANDARD SPECIFICATIONS FOR HIGHWAY BRIDGES IN ADDITION TO THOSE LISTED BELOW.

| CONCRETE | CLASS A | ALL OTHERS (EXCEPT PRESTRESSED CONCRETE BEAMS AND UNLESS OTHERWISE NOTED ON THE PLANS) |
|---|---|---|
| F'c | 3000 P.S.I. | 5000 P.S.I. |
| Fc | 1200 P.S.I. | 2000 P.S.I. |
| N | 9 | 7 |

FOR PRESTRESSED CONCRETE BEAMS, SEE PRESTRESSED CONCRETE NOTES.

6. REINFORCEMENT:
   (A) THE MINIMUM COVERING MEASURED FROM THE SURFACE OF THE CONCRETE TO THE FACE OF ANY REINFORCING BARS SHALL BE AS FOLLOWS:
   A.1. DECK SLABS (FOR BOX GIRDERS, T-BEAMS, PRESTRESSED BEAMS)
      A. TOP BARS = 1 1/2"
      B. BOTTOM BARS = 1 1/4"
   A.2. BOX GIRDERS
      A. 1 1/4" TO STIRRUP FROM OUTSIDE FACES
      B. 1" TO STIRRUP FROM INSIDE FACES.
   A.3. FOR PRESTRESSED CONCRETE BEAMS SEE PRESTRESSED CONCRETE BEAM DETAILS.
   A.4. ABUTMENTS, PIERS AND RETAINING WALLS = 2"
   A.5. COLUMNS = 2" TO TIES
   A.6. CONCRETE CAST AGAINST AND PERMANENTLY EXPOSED TO EARTH = 3".
   A.7. CONCRETE EXPOSED TO SEA WATER = 4".
   (B) REINFORCING BARS SHALL BE DETAILED IN ACCORDANCE WITH A.C.I. MANUAL OF STANDARD PRACTICE FOR DETAILING REINFORCED CONCRETE HIGHWAY STRUCTURES UNLESS OTHERWISE NOTED.
   (C) MINIMUM CLEAR SPACING BETWEEN PARALLEL BARS SHALL BE 1 1/2 TIMES THE DIAMETER OF BARS (FOR NON BUNDLED BARS), BUT IN NO CASE SHALL THE CLEAR DISTANCE BETWEEN THE BARS BE LESS THAN 1 1/2 TIMES THE MAXIMUM SIZE OF THE COARSE AGGREGATE.
   (D) ALL DIMENSIONS RELATING TO REINFORCING BARS (EG. SPACING OF BARS, ETC.,) ARE TO CENTERS OF BARS UNLESS OTHERWISE NOTED.
   (E) REINFORCING BARS SHALL BE SECURELY TIED AT ALL INTERSECTIONS AND LAP SPLICES AND SHALL BE HELD IN PLACE DURING POURING TO MAINTAIN THEIR PROPER LOCATIONS AS SHOWN ON THE PLANS.
   (F) VERTICAL COLUMN BARS SHALL BE ARRANGED IN SUCH A MANNER AS TO AVOID INTERFERENCE WITH PIER CAP BARS ABOVE AS DIRECTED BY THE ENGINEER.
7. ELASTOMERIC PADS: BOTTOM OF BRIDGE BEARING PADS SHALL BE SECURED TO THE CONCRETE SEATS, TO PREVENT DISPLACEMENT, WITH ADHESIVES APPROVED BY THE ENGINEER.
8. CONSTRUCTION METHODS.
   (A) SEE STANDARD SPECIFICATIONS AND SPECIAL PROVISIONS.
   (B) IN GENERAL TOP OF CONCRETE DECK SLAB SHALL BE CONSTRUCTED TO FOLLOW THE ROADWAY VERTICAL AND HORIZONTAL CURVES.
   (C) FOR CONCRETE FINISH SEE STANDARD SPECIFICATIONS AND FOR ARCHITECTURAL TREATMENT OF COLUMNS, SEE DETAILS.
   (D) GIRDER CONCRETE SEATS RECEIVING ELASTOMERIC PADS SHALL BE POURED MONOLITHICALLY WITH SUPPORTING STRUCTURE. TOP OF CONCRETE SEATS SHALL BE FINISHED WITH A STEEL TROWEL TO A SMOOTH LEVEL SURFACE TO THE ELEVATION SHOWN ON THE PLANS.
   (E) SPREAD FOOTINGS SHALL BE EXCAVATED AND POURED NEAT AGAINST UNDISTURBED GROUND. IN CASE OF OVER EXCAVATION, SPACE BETWEEN FOOTING AND GROUND SHALL BE FILLED WITH CONCRETE AT THE CONTRACTOR'S EXPENSE AND AS DIRECTED BY THE ENGINEER. THE MINIMUM QUALITY OF THE FILL CONCRETE SHALL BE CLASS D.
   (F) IN THE INSTALLATION OF ANCHOR BOLTS FOR BRIDGE BEARINGS, LIGHTING STANDARDS AND EXPRESSWAY BRIDGE SIGN STRUCTURES, THE CONTRACTOR SHALL PROVIDE RIGID TEMPLATES TO MAINTAIN THE PROPER LOCATIONS AND SHALL PROTECT SUCH ANCHOR BOLTS AT ALL TIMES DURING THE PERIOD OF CONSTRUCTION. METHODS SHALL BE APPROVED BY THE ENGINEER.
   (G) EXCEPT AS OTHERWISE NOTED, ALL VERTICAL DIMENSIONS ARE MEASURED PLUMB.
9. GENERAL
   (A) ALL ITEMS NOTED INCIDENTAL WILL NOT BE PAID FOR SEPARATELY.
   (B) THE CONTRACTOR SHALL VERIFY THE LOCATION OF ALL UTILITY LINES AND NOTIFY THE RESPECTIVE OWNERS BEFORE COMMENCING THE WORK OF EXCAVATION OR THE DRIVING OF PILES, INCLUDING ANY TEMPORARY PILING OR SHEETING.
   (C) ALL STRUCTURAL STEEL SHALL BE HOT-DIP GALVANIZED AFTER FABRICATION UNLESS OTHERWISE NOTED.
   (D) CONSTRUCTION JOINTS MAY BE RELOCATED OR ADDITIONAL ONES ADDED SUBJECT TO THE APPROVAL OF THE ENGINEER.
   (E) UNLESS OTHERWISE NOTED, ALL EXPOSED CONCRETE EDGES SHALL BE CHAMFERED 3/4" x 3/4".
   (F) STANDARD DETAIL DRAWINGS REFER TO ALL STRUCTURES IN GENERAL, EXCEPT FOR MODIFICATIONS AS MAY BE REQUIRED FOR SPECIAL CONDITIONS. FOR SUCH MODIFICATIONS REFER TO THE CORRESPONDING DETAILED DRAWINGS.
   (G) FOR ELECTRICAL CONDUIT LOCATION DETAILS SEE ELECTRICAL DRAWINGS.
10. FOUNDATION:
   (A) DESIGN LOAD FOR ALL ~~PILES = 90 TONS~~, UNLESS OTHERWISE SPECIFIED, ON FOOTING PLANS. * PILE TYPE A=115 TONS AND PILE TYPE B = 85 TONS
   (B) FOR BORING LOGS AND THEIR LOCATION SEE SHEET NOS. B-1, B-2, ETC.
   (C) THE ESTIMATED PILE TIP ELEVATIONS SHOWN ON THE PLANS ARE BASED ON BORING DATA.
   (D) IN DRIVING EACH GROUP OF PILES, THE CONTRACTOR SHALL START FROM CENTER OF THE GROUP AND PROCEED OUTWARDS, EXCEPT FOR TEST PILES AND LOAD TEST PILES.
   (E) THE CONTRACTOR SHALL VERIFY THE TYPE OF SURFACE SOIL BEFORE STARTING TO DRIVE ANY PILE. WHERE THERE IS A SURFACE CRUST, A TEMPORARY STEEL SLEEVE SHALL BE USED TO PROTECT THE BITUMEN COATING ON PILES. THE SLEEVE SHALL EXTEND THROUGH THE DEPTH OF THE CRUST. THE SLEEVE SHALL BE REMOVED AFTER THE PILE IS DRIVEN AND THE ANNULAR SPACE AROUND THE PILE SHALL BE BACKFILLED AS SPECIFIED IN THE SPECIAL PROVISIONS. SURFACE SOIL/CRUST IS DEFINED AS THE MATERIAL BETWEEN THE GROUND LINE, OR BOTTOM OF EXCAVATION, AND THE UNIFORM SOFT CLAYS (WITHOUT THE PRESENCE OF GRANULAR MATERIALS).
   (F) LOAD TEST PILES INDICATED IN FOUNDATION PLAN SHALL BE FURNISHED 17 ~~13~~' LONGER THAN REGULAR PILES.
   (G) TEST PILES INDICATED IN FOUNDATION PLAN SHALL BE FURNISHED 5' LONGER THAN REGULAR PILES.
   (H) SQUARE PILES ARE TO BE SO ALIGNED THAT FRONT AND REAR FACES OF PILES ARE PARALLEL TO CENTERLINE OF PIER.

* DESIGN LOAD FOR PILES EXCLUDES PILE WEIGHT AND ESTIMATED DOWNDRAG.

11. REFERENCES:
   (A) FOR PRESTRESSED CONCRETE NOTES, SEE DRAWINGS FOR PRESTRESSED BEAM DETAILS.
   (B) FOR SIGN STRUCTURE NOTES, SEE DRAWING NO. ES-1.
   (C) FOR ADDITIONAL PILE NOTES SEE DRAWING NO. SD-10.

12. SYMBOLS AND ABBREVIATIONS

| | | | |
|---|---|---|---|
| (E) OR (EXP.) | - EXPANSION | O.C. | - ON CENTERS |
| (H) | - HINGE | O/S | - OFFSET |
| ALT. | - ALTERNATE | STR. | - STRAIGHT OR STRINGER |
| AZ. | - AZIMUTH | STIRR. | - STIRRUP |
| ℄ | - CENTERLINE | TYP. | - TYPICAL |
| ⅊ | - BASELINE | (T) OR T. | - TOP |
| E.F. | - EACH FACE | (B) OR B. | - BOTTOM |
| B.F. | - BOTH FACES | BRG. | - BEARING |
| F.F. | - FAR FACE | T.O.D. | - TOP OF DECK |
| N.F. | - NEAR FACE | W.P. | - WORKING POINT |
| C.J. | - CONSTRUCTION JOINT | @ | - AT |
| CL. | - CLEAR | Ø OR DIA. | - DIAMETER |
| EL., ELEV. | - ELEVATION | ⅊ | - PLATE |
| E.P. | - EDGE OF PAVEMENT | | |
| EB | - EAST BOUND | | |
| FIN. GR. | - FINISHED GRADE | | |
| WB | - WEST BOUND | | |
| INV. | - INVERT | | |
| JT. | - JOINT | | |
| N.T.S. | - NOT TO SCALE | | |

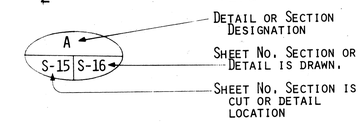


~~E 3~~ - Denotes changes to C.O. 332 - 2/29/80.

| DATE | REVISION |
|---|---|
| 2/29/80 | Added notes (F) & (G) to item 10. Foundation |

ORIGINAL PLAN | SURVEY PLOTTED BY | DRAWN BY | TRACED BY | DESIGNED BY | QUANTITIES BY | CHECKED BY | DATE | NOTE BOOK | No.

VIJAY CHANDRA REGISTERED PROFESSIONAL ENGINEER No. 4120 HAWAII, U.S.A.

THIS WORK WAS PREPARED BY ME OR UNDER MY SUPERVISION.
Vijay chandra
Signature

STATE OF HAWAII
DEPARTMENT OF TRANSPORTATION
HIGHWAYS DIVISION

# GENERAL NOTES

KEEHI INTERCHANGE
F.A.I. PROJECT NO. I-H1-1 ( 131 ) : 17
SCALE: DATE: AUG. 31, 1977

SHEET NO SD-1 OF SD-17 SHEETS

C.O. 332

| FED. ROAD DIST. NO. | STATE | FED. AID PROJ. NO. | FISCAL YEAR | SHEET NO. | TOTAL SHEETS |
|---|---|---|---|---|---|
| HAWAII | HAW. | EHH-(131):17 | 1977 | 333 | 394 |

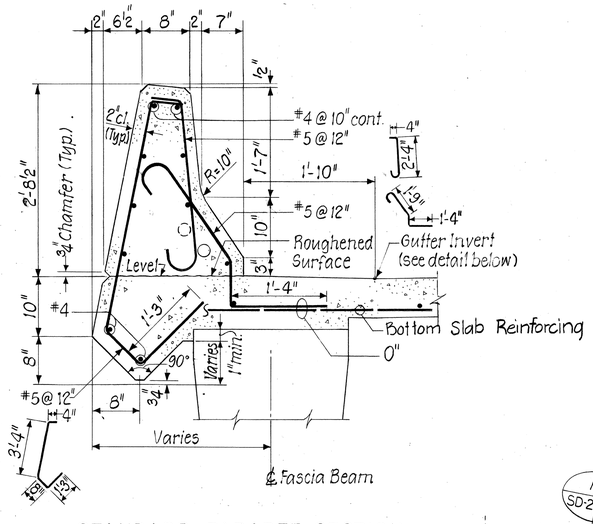


STANDARD PARAPET SECTION
Scale: 1" = 1'-0"

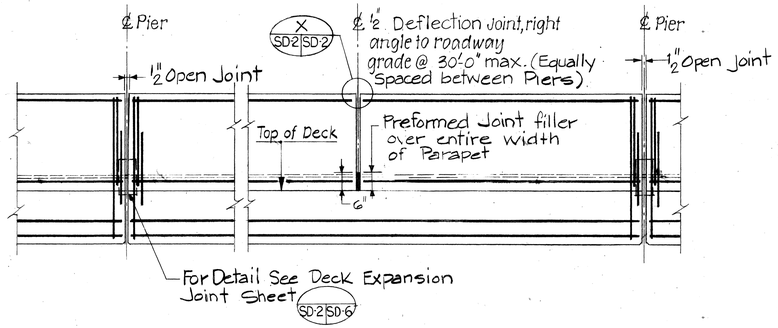


STANDARD PARAPET
TYPICAL LONGITUDINAL SECTION
Scale: ½" = 1'-0"

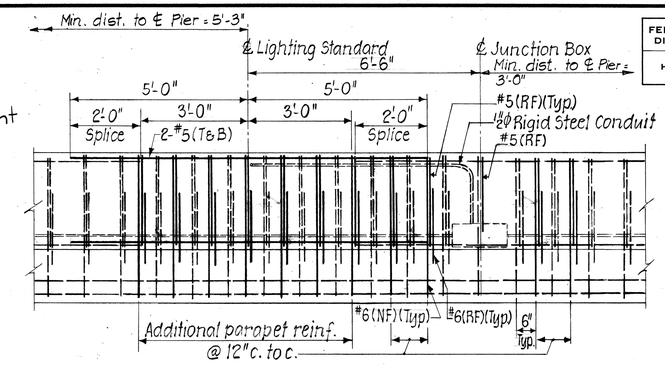


NOTE: For location of Lighting Standard See General Plan

PARAPET REINF. AT LIGHTING STANDARD & JUNCTION BOX
TYPICAL LONGITUDINAL SECTION
Scale: ½" = 1'-0"

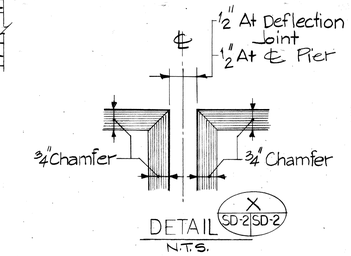


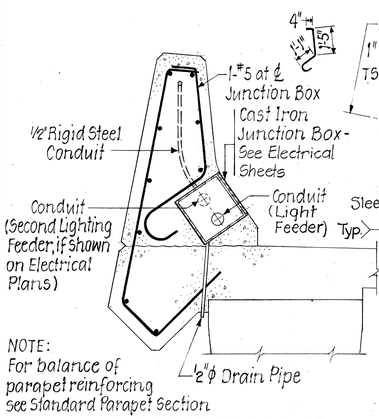


NOTE:
For balance of parapet reinforcing see Standard Parapet Section

PARAPET DETAIL AT JUNCTION BOXES
Scale: 1" = 1'-0"

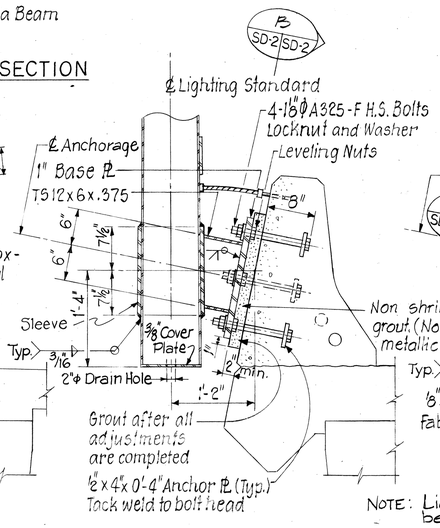


ALTERNATE METHOD
LIGHTING STANDARD ATTACHMENT
Scale: 1" = 1'-0"
(Note: Contractor used this Alternate Method)

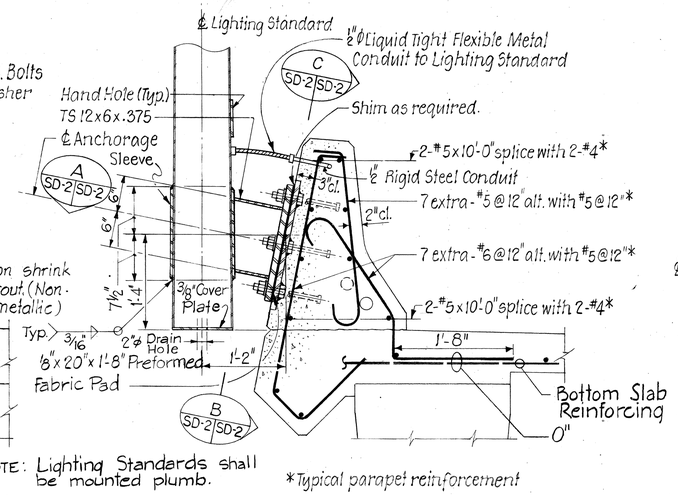


NOTE: Lighting Standards shall be mounted plumb.

*Typical parapet reinforcement

PARAPET DETAIL AT LIGHTING STANDARD
Scale: 1" = 1'-0"

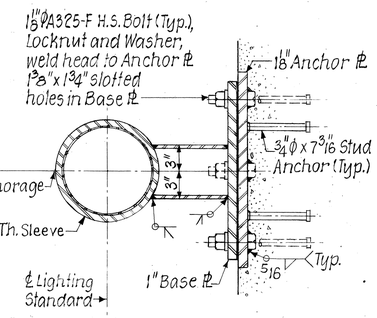


SECTION A SD-2 SD-2
Scale: 1½" = 1'-0"

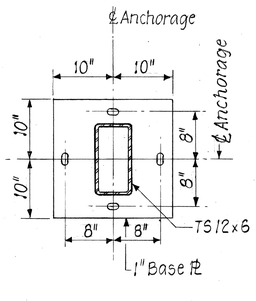


SECTION B SD-2 SD-2
Scale: 1" = 1'-0"

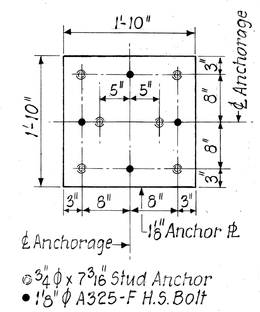


SECTION C SD-2 SD-2
Scale: 1" = 1'-0"

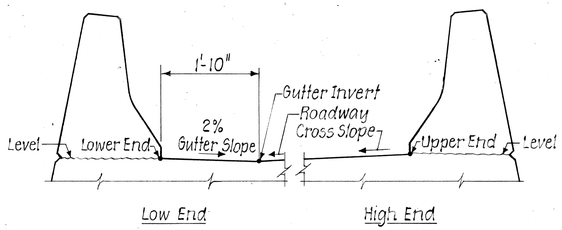


Note: For gutter slope transition, at roadway transition, see Sheet No SD-8.

TYPICAL CROSS SLOPE DETAIL FOR DRAINAGE
Scale: ¾" = 1'-0".

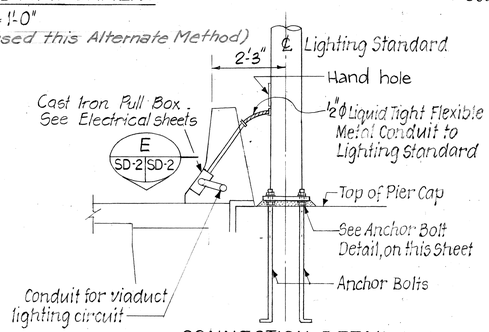


CONNECTION DETAIL
Scale: ½" = 1'-0"

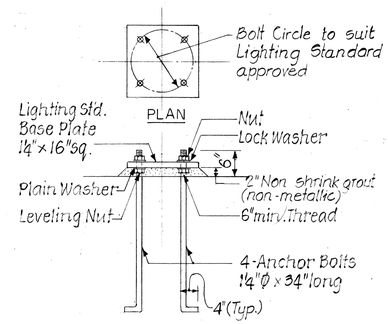


ELEVATION
ANCHOR BOLT DETAIL
Scale: ¾" = 1'-0"

PIER MOUNTED LIGHTING STANDARD

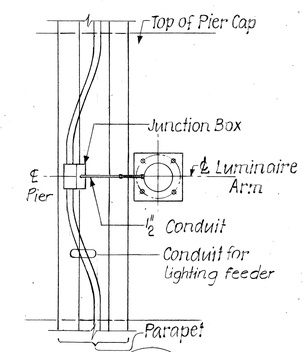


SECTION E SD-2 SD-2
Scale: ½" = 1'-0"

NOTE:
Anchorage system for Lighting Standard shall be hot-dip galvanized.

| ORIGINAL PLAN | SURVEY PLOTTED BY | DATE |
|---|---|---|
| | DRAWN BY | |
| | TRACED BY | |
| NOTE BOOK | DESIGNED BY | |
| | QUANTITIES BY | |
| NO. | CHECKED BY | |

VIJAY CHANDRA REGISTERED PROFESSIONAL ENGINEER No. 4120 HAWAII, U.S.A.

THIS WORK WAS PREPARED BY ME OR UNDER MY SUPERVISION.
Vijay Chandra
Signature

STATE OF HAWAII
DEPARTMENT OF TRANSPORTATION
HIGHWAYS DIVISION

# STANDARD PARAPET DETAILS

KEEHI INTERCHANGE
F.A.I. PROJECT NO. I-HI-1(131):17
SCALE: AS SHOWN
DATE: AUG. 31, 77

SHEET No. SD-2 OF SD-17 SHEETS

| FED. ROAD DIST. NO. | STATE | FED. AID PROJ. NO. | FISCAL YEAR | SHEET NO. | TOTAL SHEETS |
|---|---|---|---|---|---|
| HAWAII | HAW. | I-H1(131)17 | 1977 | 334 | 394 |

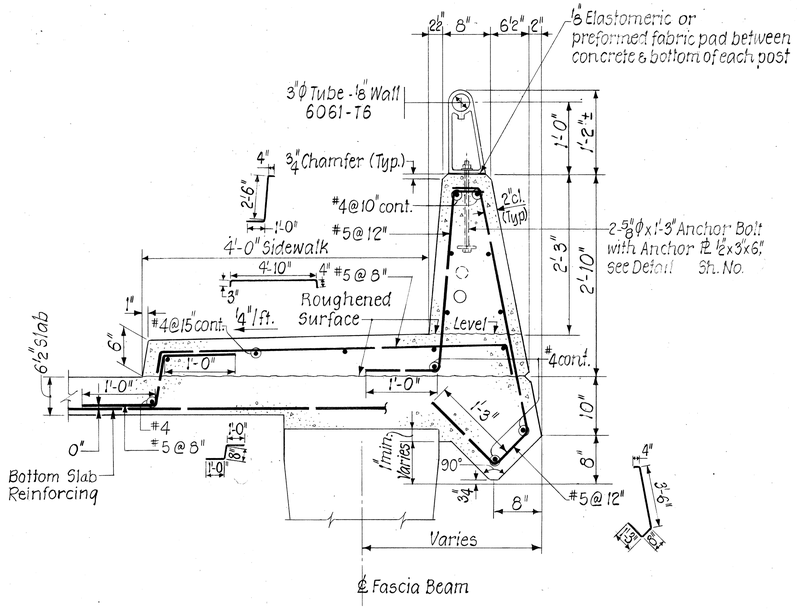


STANDARD SIDEWALK PARAPET SECTION

Scale: 1" = 1'-0"

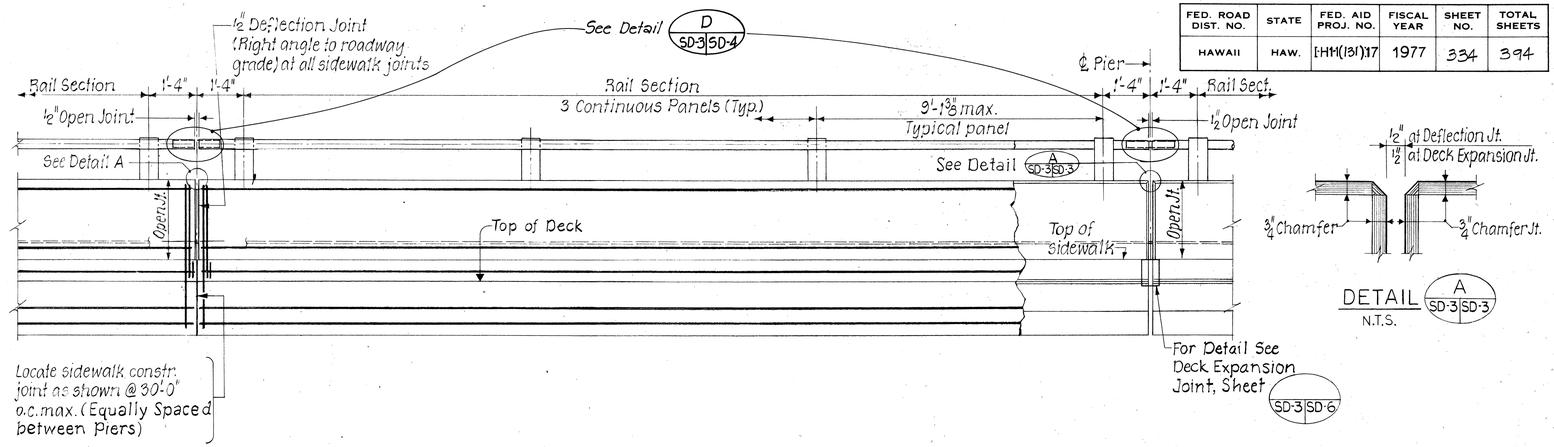


STANDARD SIDEWALK PARAPET RAILING ELEVATION AND TYPICAL LONGITUDINAL SECTION

Scale: 1/2" = 1'-0"

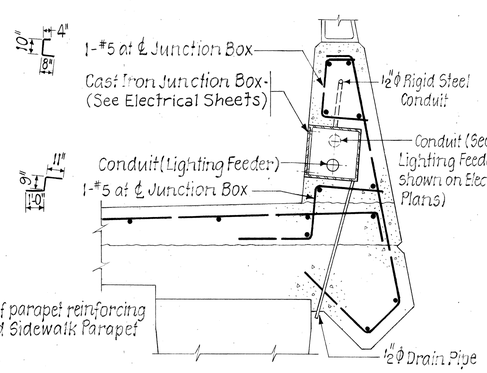


NOTE:
For balance of parapet reinforcing see Standard Sidewalk Parapet Section.

SIDEWALK PARAPET DETAIL AT JUNCTION BOXES

Scale: 1" = 1'-0"

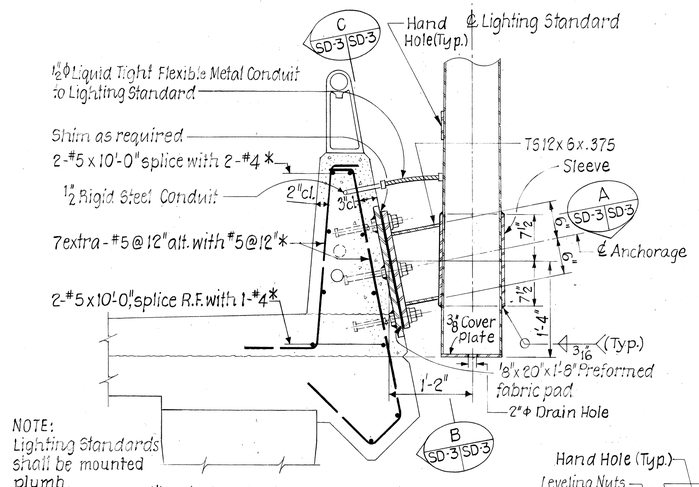


SIDEWALK PARAPET DETAIL AT LIGHTING STANDARD

Scale: 1" = 1'-0"

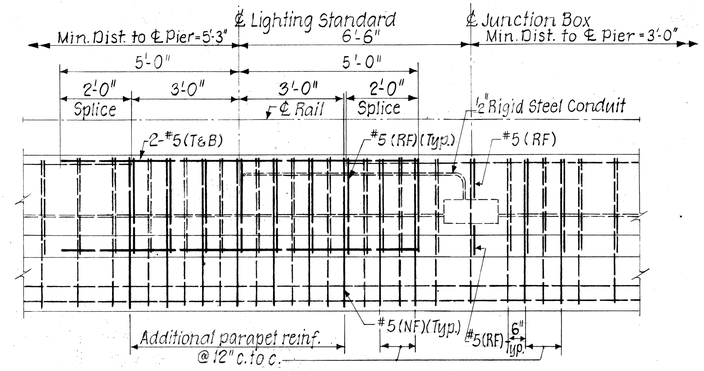


Note: For location of Lighting Standards, see General Plan

PARAPET REINF. AT LIGHTING STANDARD & JUNCTION BOX

TYPICAL LONGITUDINAL SECTION

Scale: 1/2" = 1'-0"

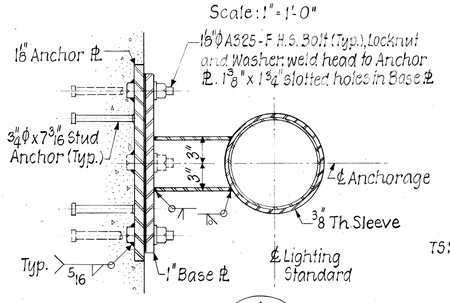


SECTION A SD-3 SD-3

Scale: 1 1/2" = 1'-0"

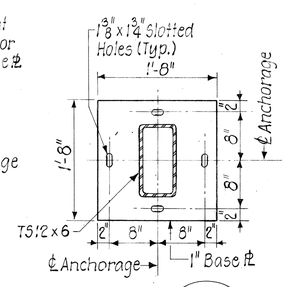


SECTION B SD-3 SD-3

Scale: 1" = 1'-0"

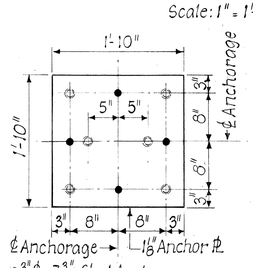


SECTION C SD-3 SD-3

Scale: 1" = 1'-0"

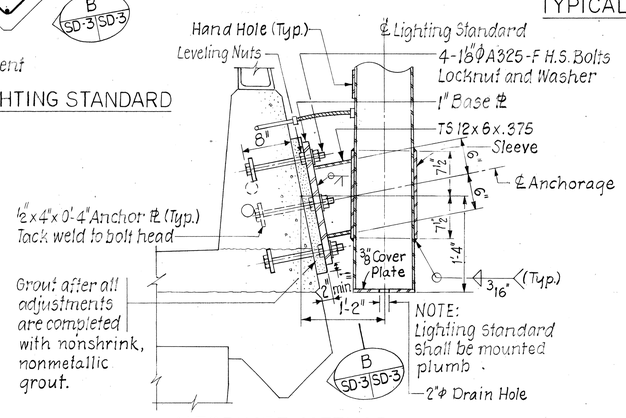


ALTERNATE METHOD

LIGHTING STANDARD ATTACHMENT

Scale: 1" = 1'-0"

NOTE:
Anchorage system for Lighting Standard shall be hot-dip galvanized.

| DATE | REVISION |
|---|---|
| 3/23/78 | Added railing splice details in Railing Elevation & Long. Section. |

STATE OF HAWAII
DEPARTMENT OF TRANSPORTATION
HIGHWAYS DIVISION

# STANDARD SIDEWALK PARAPET DETAILS

KEEHI INTERCHANGE
F.A.I. PROJECT NO. I-HI-I(131):17

SCALE: AS SHOWN DATE: AUG. 31, 77

VIJAY CHANDRA REGISTERED PROFESSIONAL ENGINEER No. 4120 HAWAII, U.S.A.

THIS WORK WAS PREPARED BY ME OR UNDER MY SUPERVISION.

Vijay Chandra
Signature

SHEET No. SD-3 OF SD-17 SHEETS

ORIGINAL PLAN | SURVEY PLOTTED BY | DRAWN BY PATRICIA MALKIN | TRACED BY | DESIGNED BY | QUANTITIES BY | CHECKED BY | DATE | NOTE BOOK | No.

ADD. 334

| FED. ROAD DIST. NO. | STATE | FED. AID PROJ. NO. | FISCAL YEAR | SHEET NO. | TOTAL SHEETS |
|---|---|---|---|---|---|
| HAWAII | HAW. | I-H1-(131).17 | 1977 | 335 | 394 |

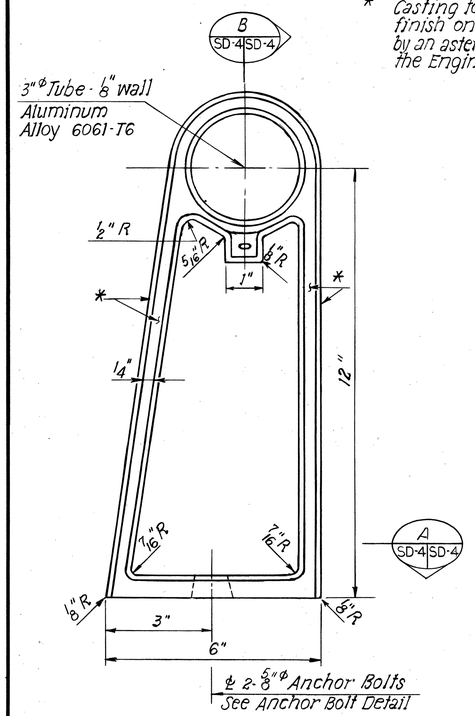


SIDE ELEVATION

6" = 1'-0"

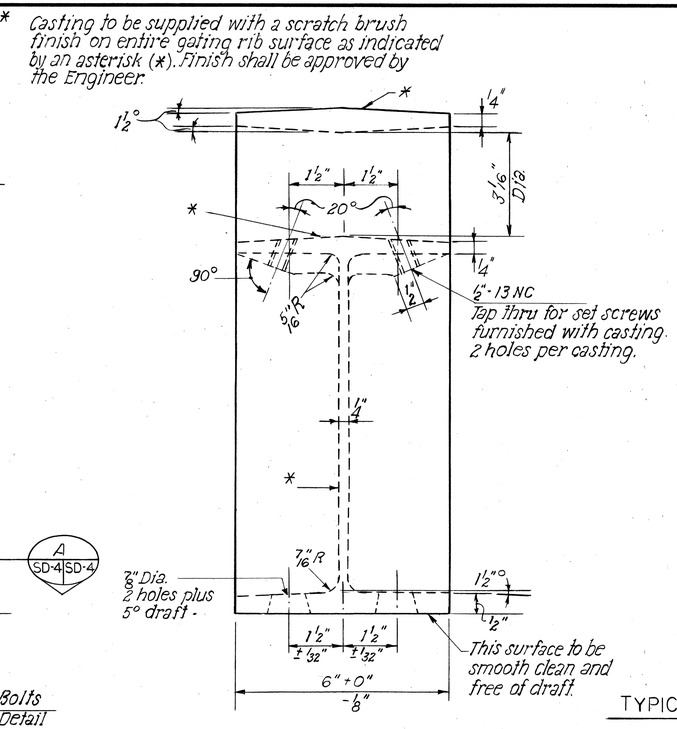


END ELEVATION

6" = 1'-0"

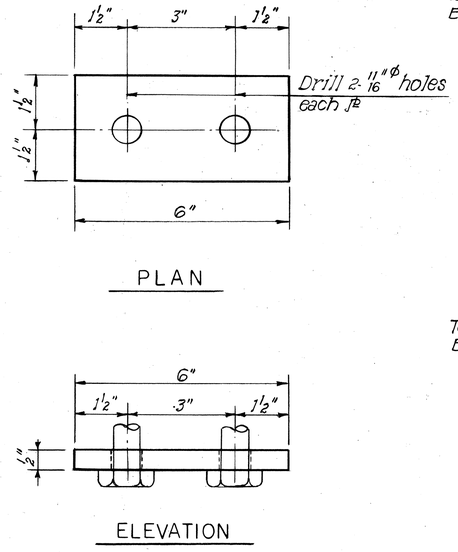


TYPICAL ANCHOR PLATE DETAILS (A36 STEEL)

Scale: 6" = 1'-0"

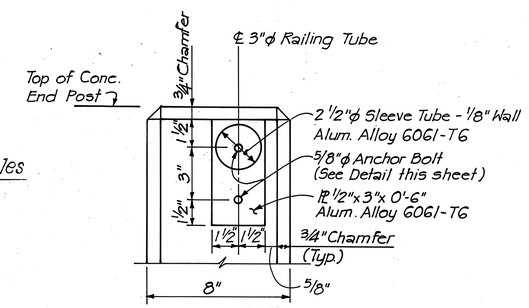


SECTION

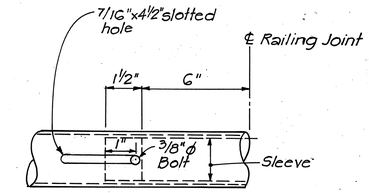


VIEW

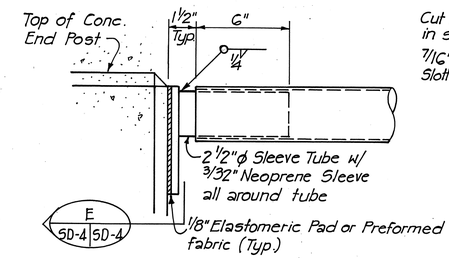


ELEVATION AT CONCRETE END POST

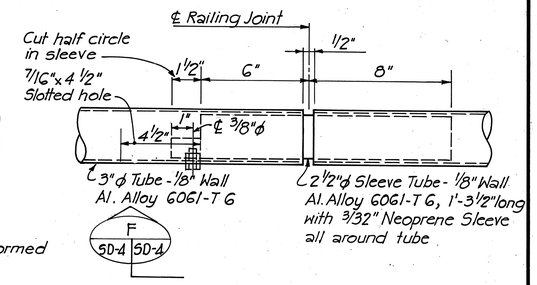


ELEVATION AT INTERMEDIATE JOINTS

DETAIL D SD-3 SD-4

Scale: 3" = 1'-0"

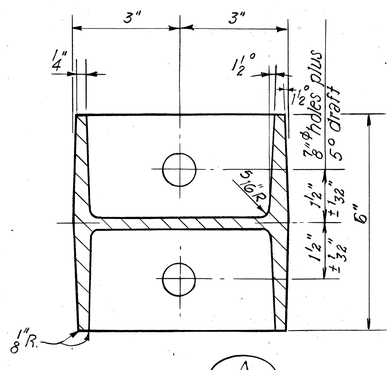


SECTION A SD-4 SD-4

6" = 1'-0"

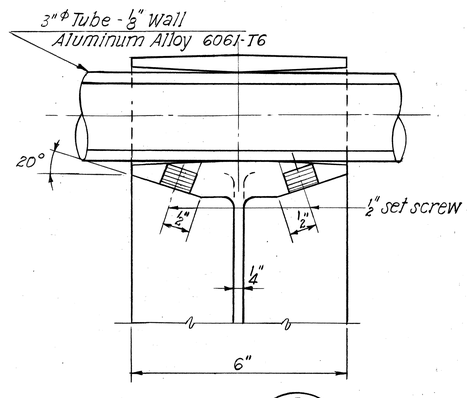


SECTION B SD-4 SD-4

6" = 1'-0"

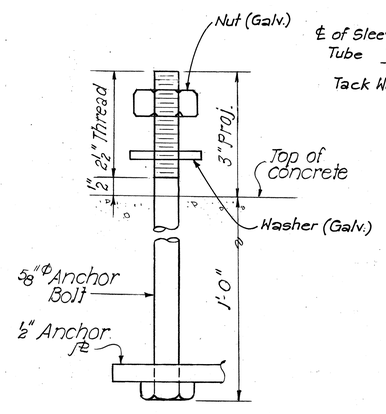


ANCHOR BOLT (Galv. Steel ASTM A325)

(Incidental to Railing)

6" = 1'-0"

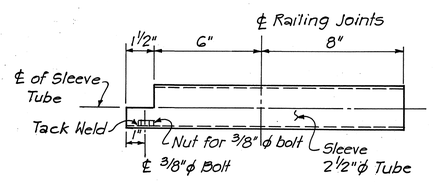


SLEEVE TUBE DETAIL AT INTERMEDIATE JOINTS

NOTES:

1. For cast post and rail, see specifications.
2. Unless otherwise specified.
   Draft angle = 3°
   Corner radii = 1/8" R
   Fillet radii = 3/8" R
   Casting tolerance = ± 1/16"
   Wall thickness = ± 1/32"
3. Cast post shall be of Aluminum Alloy A344-T4.
4. Elastomeric or Fabric Pad between concrete parapet and bottom of each post shall be incidental to "Metal Bridge Railing".
5. Material shown on Detail D SD-3 SD-4 shall be incidental to "Metal Bridge Railing"

| DATE | REVISION |
|---|---|
| | Detail D SD-3 SD-4 added. Nut & Washer added in Anchor Bolt. Note 5 added. |

STATE OF HAWAII
DEPARTMENT OF TRANSPORTATION
HIGHWAYS DIVISION

# STANDARD RAILING DETAILS

KEEHI INTERCHANGE
F.A.I. PROJECT NO. I-H1-1(131).17
SCALE: AS SHOWN DATE: AUG. 31, 77

SHEET NO. SD-4 OF SD-17 SHEETS

VIJAY CHANDRA REGISTERED PROFESSIONAL ENGINEER No. 4120 HAWAII, U.S.A.

THIS WORK WAS PREPARED BY ME OR UNDER MY SUPERVISION.

Vijay Chandra
Signature

ORIGINAL PLAN | SURVEY PLOTTED BY | DRAWN BY S. SHERMAN | TRACED BY | DESIGNED BY | QUANTITIES BY | CHECKED BY | DATE | NOTE BOOK | No.

ADD. 335

| FED. ROAD DIST. NO. | STATE | FED. AID PROJ. NO. | FISCAL YEAR | SHEET NO. | TOTAL SHEETS |
|---|---|---|---|---|---|
| HAWAII | HAW. | I-H1-1(131):17 | 1977 | 336 | 394 |

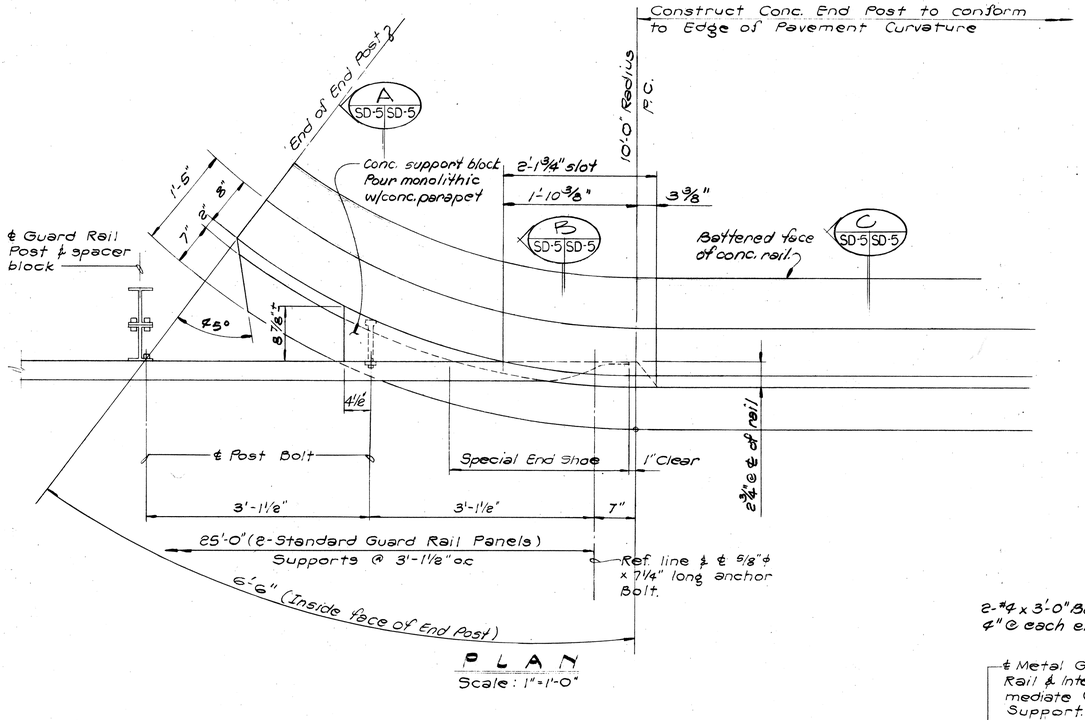


PLAN
Scale: 1" = 1'-0"

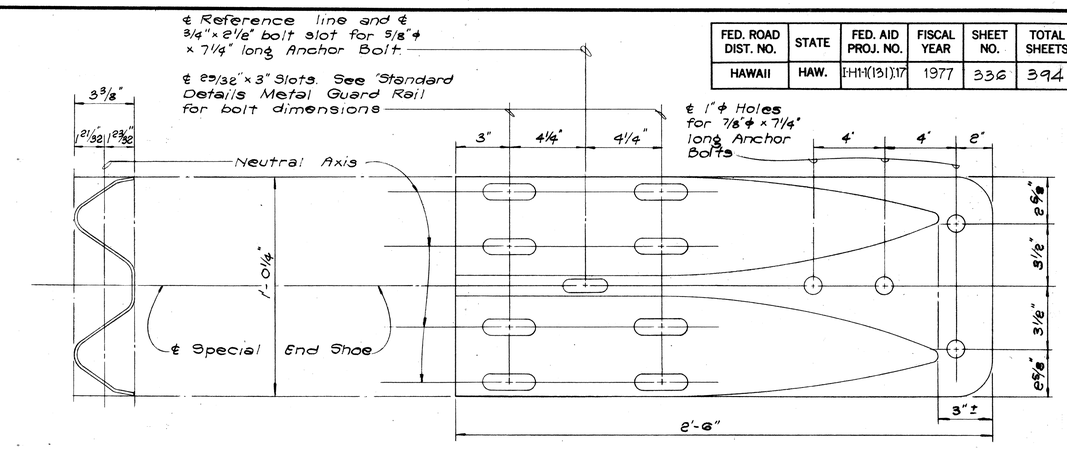


SECTION ELEVATION

SPECIAL END SHOE DETAILS
Scale: 3" = 1'-0"

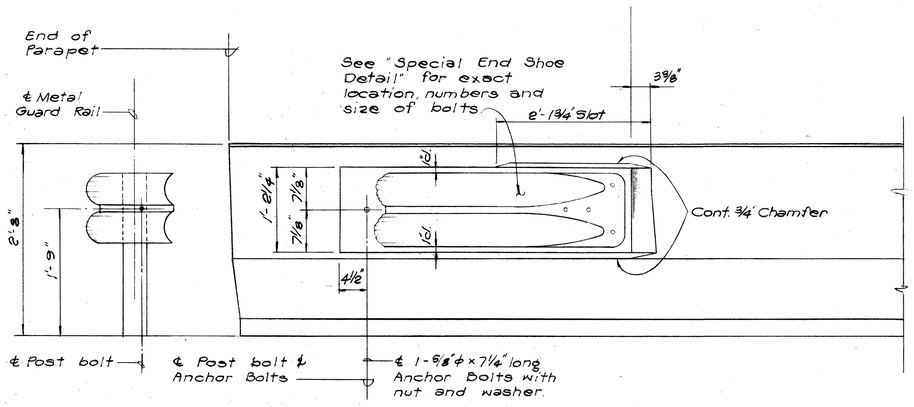


ELEVATION
Scale: 1" = 1'-0"

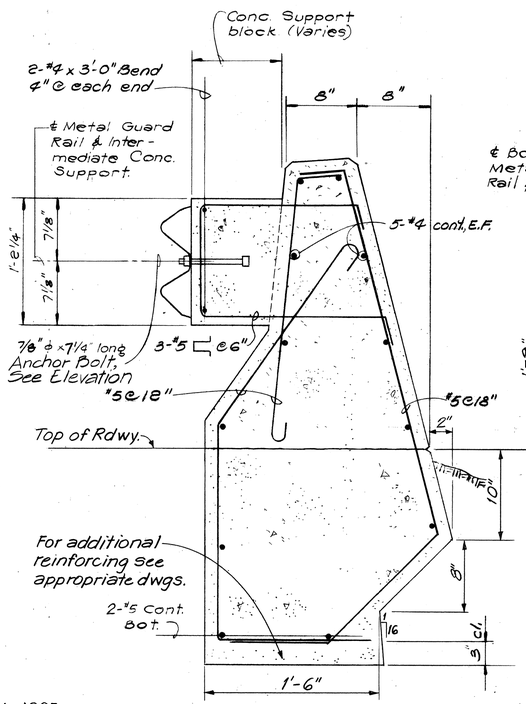


SECTION A SD-5 SD-5
Scale: 1 1/2" = 1'-0"

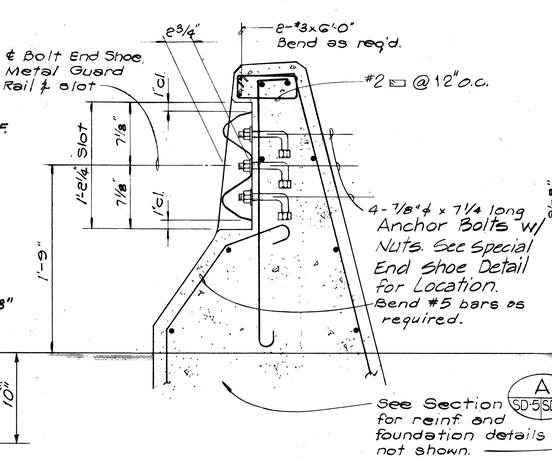


SECTION B SD-5 SD-5
Scale: 1 1/2" = 1'-0"

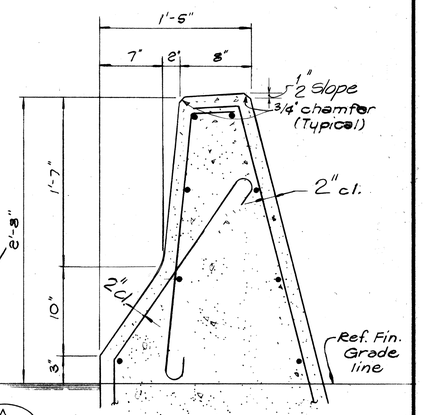


SECTION C SD-5 SD-5
Scale: 1 1/2" = 1'-0"

NOTES:

1. All Anchor Bolts shall be High Strength bolts conforming to the requirements of ASTM A325
2. All Shoe assembly, including anchor bolts, nuts and washers shall be galvanized.
3. Special End Shoe shall be fabricated from 10 gage steel conforming to the requirements of AASHO 180.
4. First 25'-0" of guard rail adjoining "Special End Shoe" shall be galvanized steel.
5. Anchor Bolt length given from under bolt head.

SECTION A SD-5 SD-5
Scale: 1 1/2" = 1'-0"

| ORIGINAL PLAN | SURVEY PLOTTED BY | DATE |
|---|---|---|
| | DRAWN BY | |
| | TRACED BY | |
| NOTE BOOK | DESIGNED BY | |
| | QUANTITIES BY | |
| No. | CHECKED BY | |

VIJAY CHANDRA REGISTERED PROFESSIONAL ENGINEER No. 4120 HAWAII, U.S.A.

THIS WORK WAS PREPARED BY ME OR UNDER MY SUPERVISION.

Vijay Chandra
Signature

STATE OF HAWAII
DEPARTMENT OF TRANSPORTATION
HIGHWAYS DIVISION

# TYPICAL END POST DETAIL

KEEHI INTERCHANGE
F.A.I. PROJECT NO. I-H1-1(131):17

SCALE: AS SHOWN DATE: AUG. 31, 1977

SHEET No. SD-5 OF SD-17 SHEETS

| FED. ROAD DIST. NO. | STATE | FED. AID PROJ. NO. | FISCAL YEAR | SHEET NO. | TOTAL SHEETS |
|---|---|---|---|---|---|
| HAWAII | HAW. | I-HI-1(131)17 | 1977 | 337 | 394 |

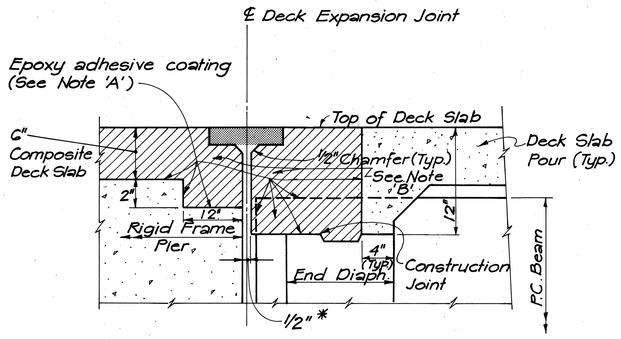


## TYPICAL DECK SECTION AT RIGID FRAME
N.T.S.

**NOTE 'A':** Just prior to concreting of the hatched areas, coat the indicated surfaces with an epoxy adhesive. (See Special provision Sec.705.13)

**NOTE 'B':** Hatched Areas shall be concreted after 28 days of deck slab pour. Anchor devices shall be located and held in their final position, as per Manufacturer's requirement, during the concreting of the hatched areas.

* Joint opening at time of Installation of joint Joint to be formed by Premolded filler.

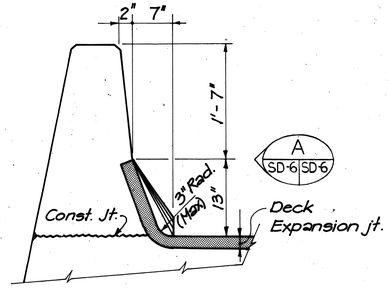


## TYPICAL SECTION AT STANDARD PARAPET

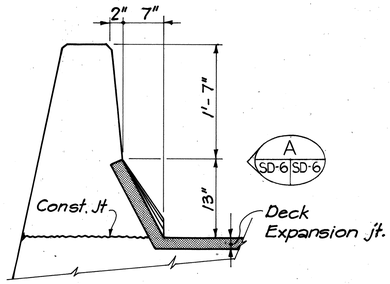


## ALTERNATE DETAIL AT PARAPET
N.T.S.

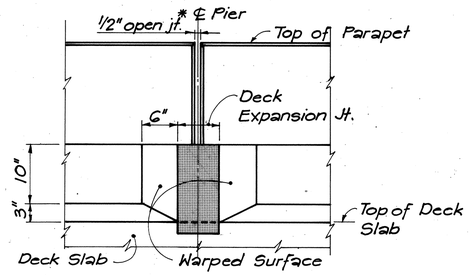


## VIEW A
N.T.S. SD-6 SD-6

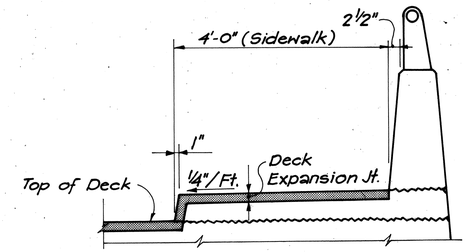


## TYPICAL SECTION AT SIDEWALK PARAPET
N.T.S.

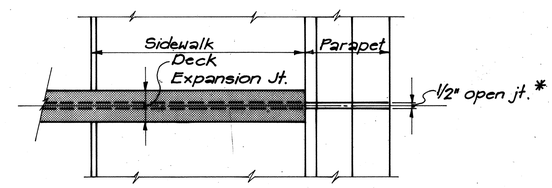


## TYPICAL PLAN
N.T.S.

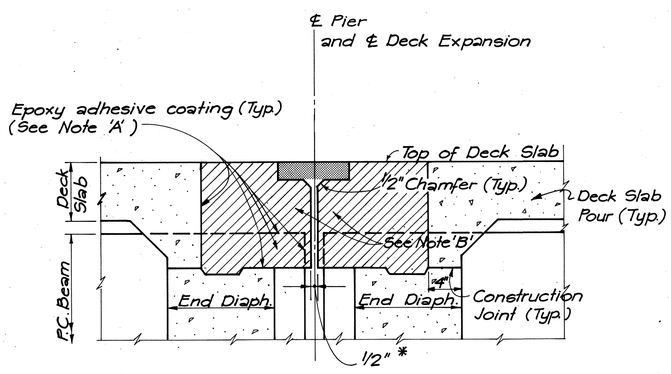


## TYPICAL DECK SECTION (AT ALL PIERS EXCEPT RIGID FRAMES)
N.T.S.

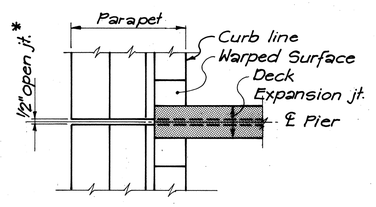


## TYPICAL PLAN _ SKEW ANGLE = 0°- 15°
N.T.S.

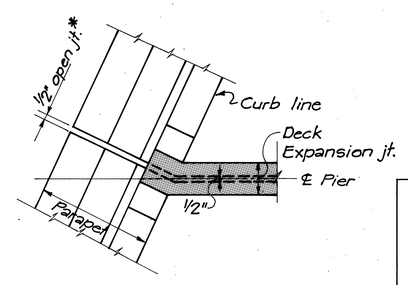


## TYPICAL PLAN _ SKEW ANGLE = OVER 15°
N.T.S.

VIJAY CHANDRA
REGISTERED PROFESSIONAL ENGINEER
No. 4120
HAWAII, U.S.A.

THIS WORK WAS PREPARED BY ME OR UNDER MY SUPERVISION.

Vijay Chandra
Signature

STATE OF HAWAII
DEPARTMENT OF TRANSPORTATION
HIGHWAYS DIVISION

# DECK EXPANSION JOINT
SHEET 1 OF 2

KEEHI INTERCHANGE
F.A.I. PROJECT NO. I-HI-1 (131) 17
SCALE: N.T.S. DATE: AUG.31,77

SHEET No. SD-6 OF SD-17 SHEETS

| ORIGINAL PLAN | SURVEY PLOTTED BY | DATE |
|---|---|---|
| | DRAWN BY | |
| | TRACED BY | |
| NOTE BOOK | DESIGNED BY | |
| | QUANTITIES BY | |
| No. | CHECKED BY | |

| FED. ROAD DIST. NO. | STATE | FED. AID PROJ. NO. | FISCAL YEAR | SHEET NO. | TOTAL SHEETS |
|---|---|---|---|---|---|
| HAWAII | HAW. | I-H1(131)17 | 1977 | 338 | 394 |

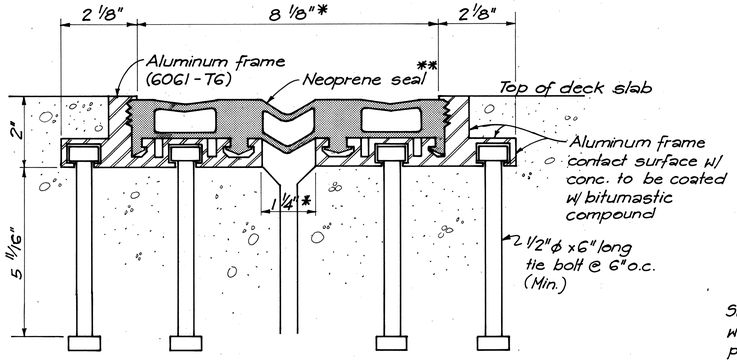


## DELASTIFLEX TYPE CP 200

(Manufacturer: D.S. Brown & Co.)

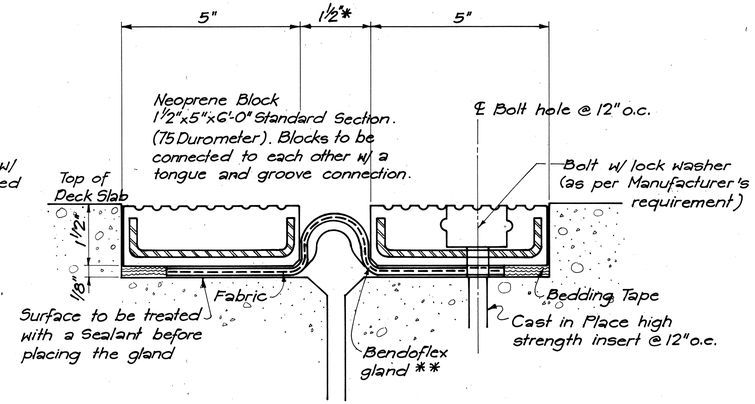


## WABO BENDOFLEX SYSTEM

(Manufacturer: Watson Bowman Ass. Inc.)

* = Installation width @ 75°F
** = Seal/Gland shall be continuous across the full width of the structure

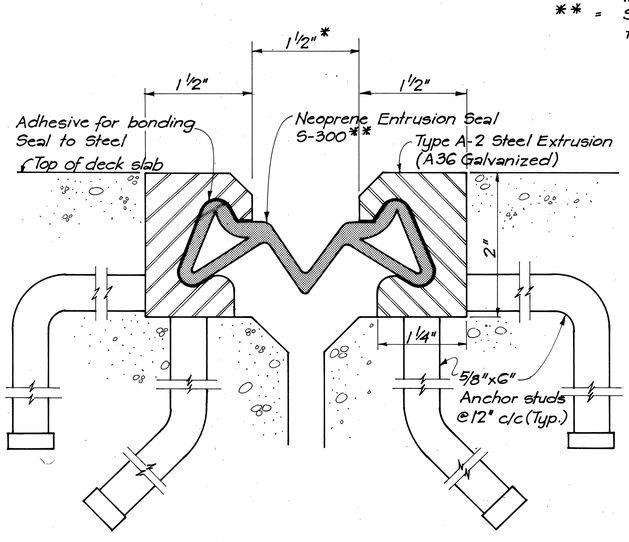


## WABO-MAURER STRIP SEAL

(Manufacturer: Watson - Bowman Ass. Inc.)

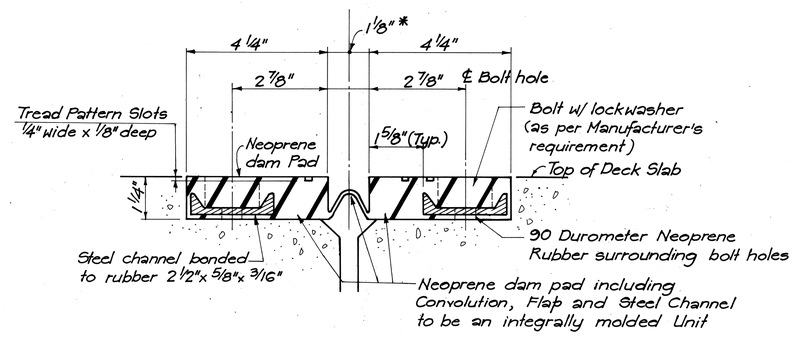


## FEL-SPAN TYPE T-20

(Manufacturer: FEL-PRO Incorporated)

NOTE: The entire assembly to be factory vulcanized into 8'-0" (Min.) long units before shipping. The convolution flap between units to be lapped and field vulcanized.

NOTE:
Four alternative Deck Expansion Joint Systems are shown. Contractor has the option of selecting any one of the systems. The Contractor shall submit detailed shop drawings of the selected joint to the Engineer for approval.

NOTE:
Contractor used On-Flex 25 deck expansion joint system.

| ORIGINAL PLAN | SURVEY PLOTTED BY | DATE |
|---|---|---|
| | DRAWN BY | |
| | TRACED BY | |
| NOTE BOOK | DESIGNED BY | |
| | QUANTITIES BY | |
| No. | CHECKED BY | |

VIJAY CHANDRA REGISTERED PROFESSIONAL ENGINEER No. 4120 HAWAII, U.S.A.

THIS WORK WAS PREPARED BY ME OR UNDER MY SUPERVISION.

Vijay Chandra
Signature

STATE OF HAWAII
DEPARTMENT OF TRANSPORTATION
HIGHWAYS DIVISION

# DECK EXPANSION JOINT
SHEET 2 OF 2

KEEHI INTERCHANGE
F.A.I. PROJECT NO. I-HI-1 (131):17
SCALE: N.T.S. DATE: AUG.31,77

SHEET NO. SD-7 OF SD-17 SHEETS

| FED. ROAD DIST. NO. | STATE | FED. AID PROJ. NO. | FISCAL YEAR | SHEET NO. | TOTAL SHEETS |
|---|---|---|---|---|---|
| HAWAII | HAW. | I-H1(131);17 | 1977 | 339 | 394 |

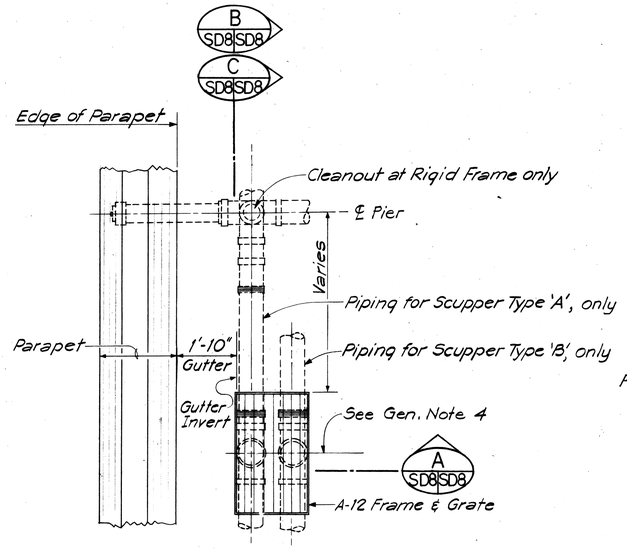


PLAN - SCUPPER

SCALE: 1/2"=1'-0"

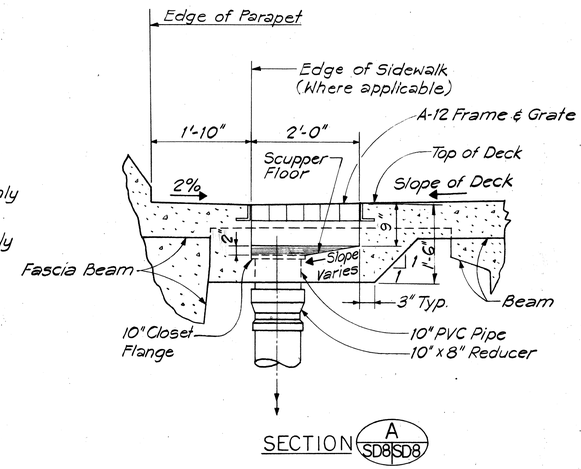


SCUPPER TYPE 'A'

SCALE: 3/4"=1'-0"

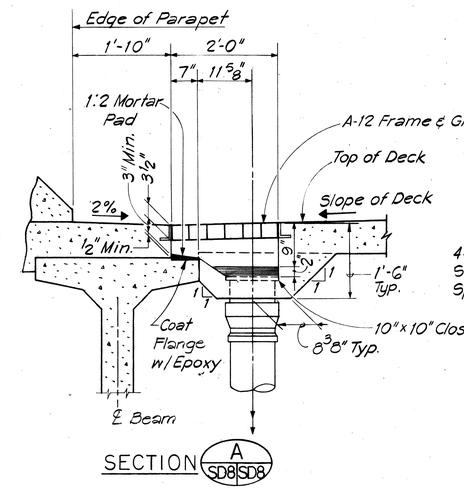


SCUPPER TYPE 'B'

SCALE: 3/4"=1'-0"

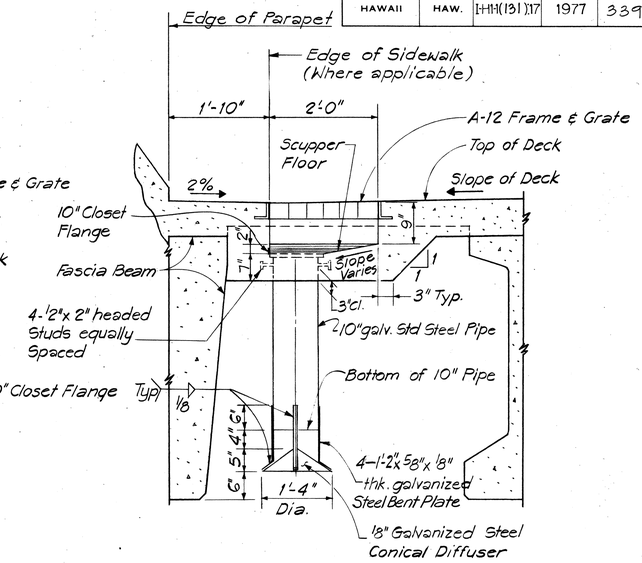


SCUPPER TYPE 'C'

SCALE: 3/4"=1'-0"

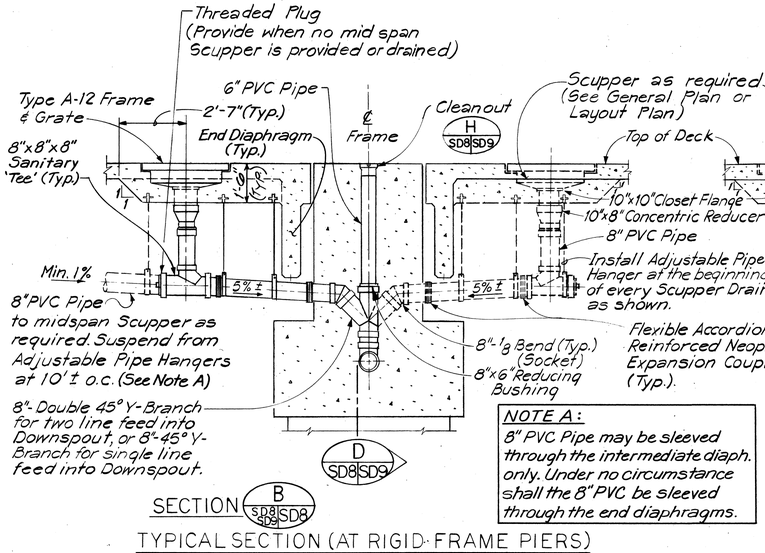


TYPICAL SECTION (AT RIGID FRAME PIERS)

SCALE : 3/8" = 1'-0"

NOTE A:
8" PVC Pipe may be sleeved through the intermediate diaph. only. Under no circumstance shall the 8" PVC be sleeved through the end diaphragms.

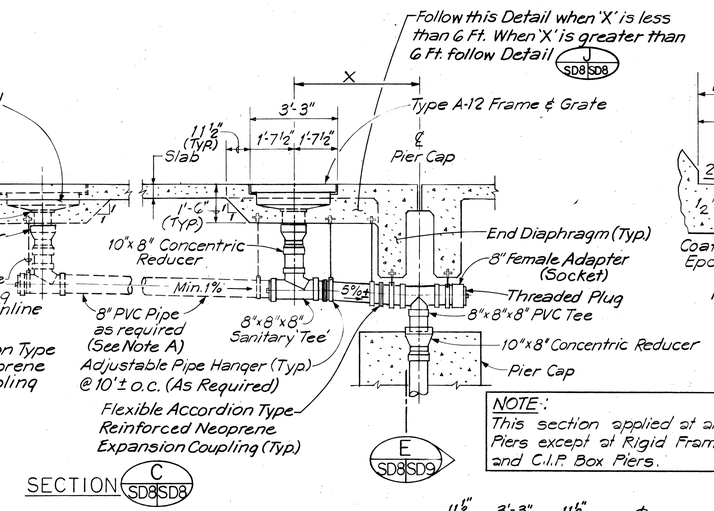


NOTE:
This section applied at all Piers except at Rigid Frames and C.I.P. Box Piers.

TYPICAL SECTION

SCALE : 3/8" = 1'-0"

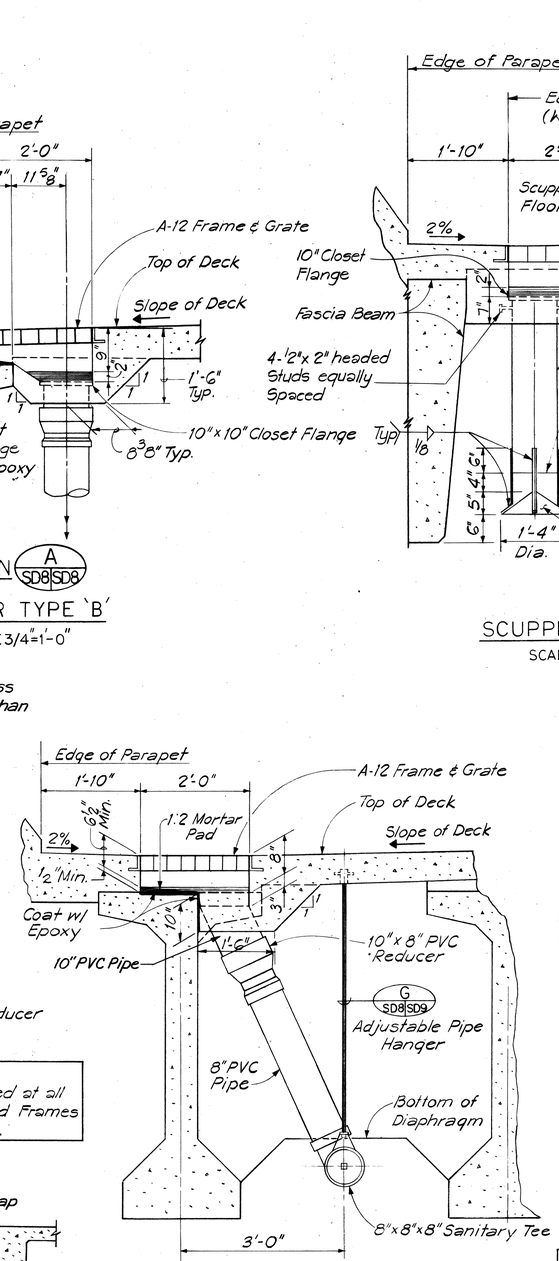


SCUPPER TYPE 'D'

SCALE: 3/4"=1'-0"

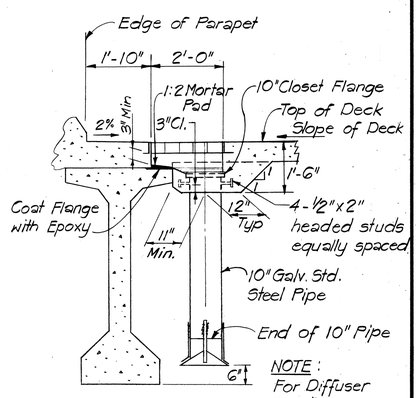


NOTE:
For Diffuser Details see Scupper Type 'C'

SCUPPER TYPE 'E'

SCALE: 1/2" = 1'-0"

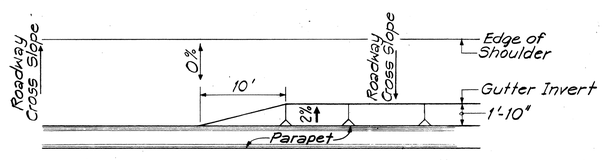


TYPICAL GUTTER TRANSITION AT ROLLOVER

N.T.S.

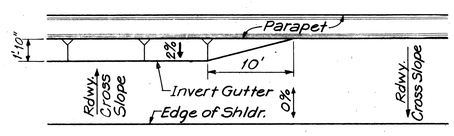


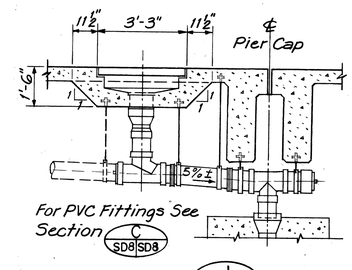


DETAIL J SD8 SD8

SCALE: 3/8"=1'-0"

| ORIGINAL PLAN | SURVEY PLOTTED BY | DATE |
|---|---|---|
| | DRAWN BY | |
| | TRACED BY | |
| NOTE BOOK | TABULATED BY | |
| | QUANTITIES BY | |
| No. | CHECKED BY | |

VIJAY CHANDRA REGISTERED PROFESSIONAL ENGINEER No. 4120 HAWAII, U.S.A.

THIS WORK WAS PREPARED BY ME OR UNDER MY SUPERVISION.

Vijay Chandra
Signature

STATE OF HAWAII
DEPARTMENT OF TRANSPORTATION
HIGHWAYS DIVISION

# STRUCTURE DRAINAGE DETAILS
## SHEET 1 OF 2

KEEHI INTERCHANGE
F.A.I. PROJECT NO. I-HI-1 (131) ;17

SCALE : AS SHOWN — DATE : AUG 31, 77

SHEET No. SD-8 OF SD-17 SHEETS

| FED. ROAD DIST. NO. | STATE | FED. AID PROJ. NO. | FISCAL YEAR | SHEET NO. | TOTAL SHEETS |
|---|---|---|---|---|---|
| HAWAII | HAW. | I-HI-(131)17 | 1977 | 340 | 394 |

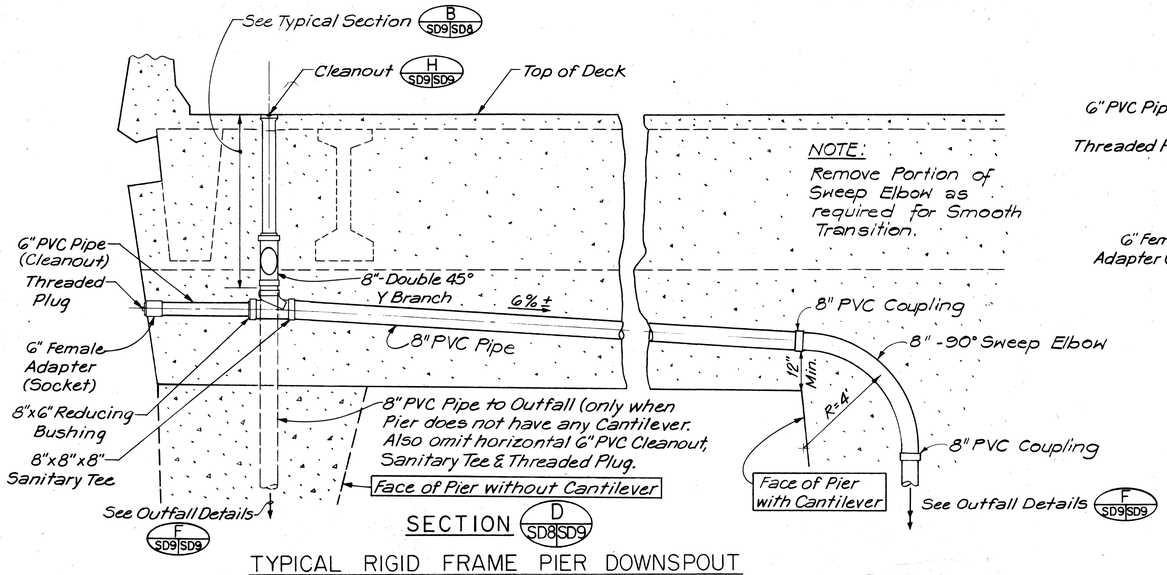


SECTION D SD8 SD9

TYPICAL RIGID FRAME PIER DOWNSPOUT

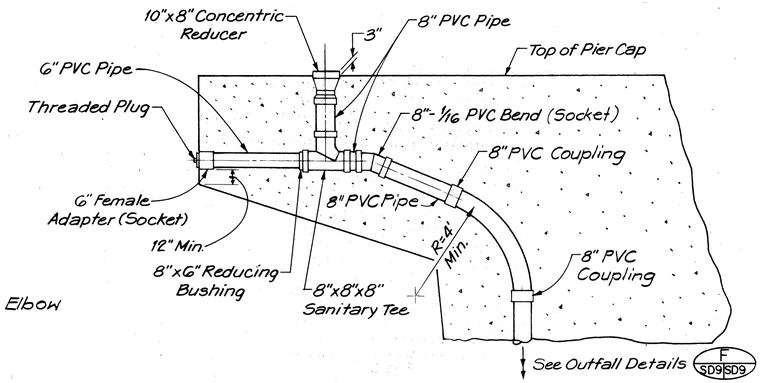


SECTION E SD8 SD9

TYPICAL HAMMERHEAD PIER DOWNSPOUT

(Applies to all Piers except Rigid Frames and C.I.P. Box Piers)

## GENERAL NOTES:

1. All Pipe Slopes shall be maximized to the greatest Extent possible without extending below the bottom of the Beams.
2. All PVC Pipes shall be Type I Schedule 40.
3. Deck Drain Cleanout Metal Frame and Cover Casting shall be Ductile Iron. Designed for Highway Traffic Wheel Loads of 16,000 Lbs And shall conform with ASTM Designation A 536.
4. For Location of Scuppers and Outfall Type, See General Plan (or Layout Plan) of Structure.

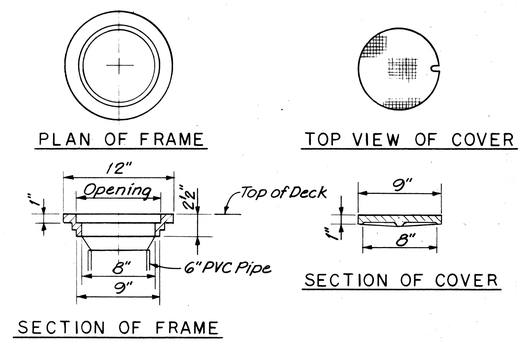


TYPICAL DECK DRAIN CLEANOUT FRAME AND COVER H SD9 SD9

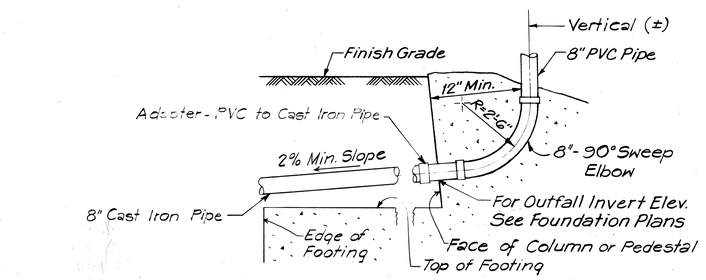


OUTFALL TYPE 1

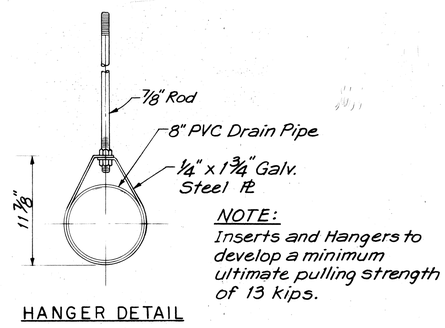


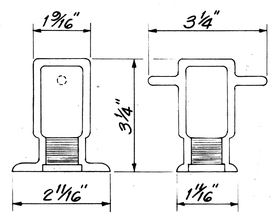


DETAIL OF PIPE HANGERS AND INSERTS G SD8 SD9

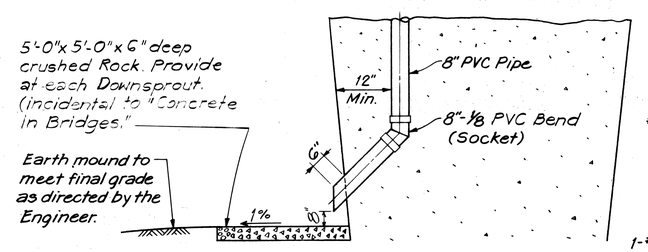


OUTFALL TYPE 2

OUTFALL DETAILS F SD9 SD9

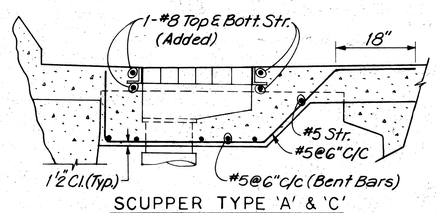


SCUPPER TYPE 'A' & 'C'

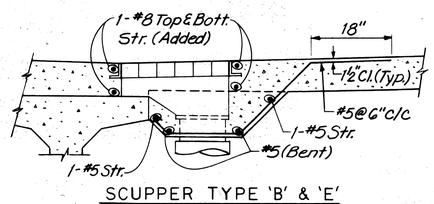


SCUPPER TYPE 'B' & 'E'

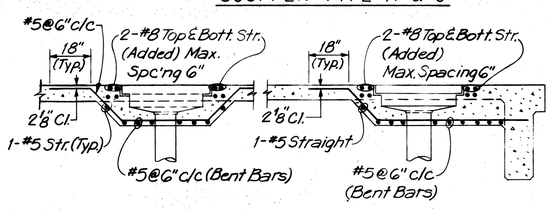


TYPICAL LONGITUDINAL SECTIONS

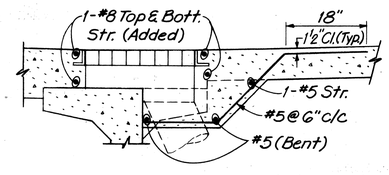


SCUPPER TYPE 'D'

REINFORCEMENT DETAILS AT SCUPPERS

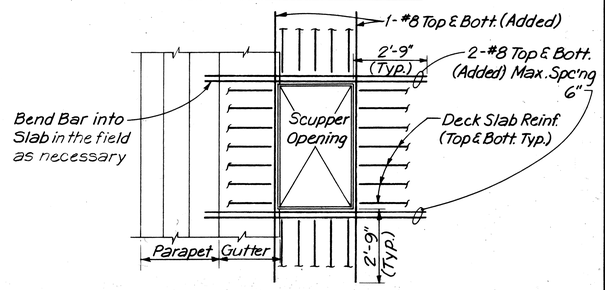


PLAN-SCUPPER

| ORIGINAL PLAN | SURVEY PLOTTED BY | DATE |
|---|---|---|
| | DRAWN BY | |
| | TRACED BY | |
| NOTE BOOK | DESIGNED BY | |
| | QUANTITIES BY | |
| No. | CHECKED BY | |

VIJAY CHANDRA REGISTERED PROFESSIONAL ENGINEER No. 4120 HAWAII, U.S.A.

THIS WORK WAS PREPARED BY ME OR UNDER MY SUPERVISION.

Vijay Chandra
Signature

STATE OF HAWAII
DEPARTMENT OF TRANSPORTATION
HIGHWAYS DIVISION

# STRUCTURE DRAINAGE DETAILS
SHEET 2 OF 2

KEEHI INTERCHANGE
F.A.I. PROJECT NO. I-HI-1 (131):17

SCALE: N.T.S. DATE: AUG. 31, 77

SHEET No. SD-9 OF SD-17 SHEETS

| FED. ROAD DIST. NO. | STATE | FED. AID PROJ. NO. | FISCAL YEAR | SHEET NO. | TOTAL SHEETS |
|---|---|---|---|---|---|
| HAWAII | HAW. | I-HI-I(131).17 | 1977 | 341 | 394 |

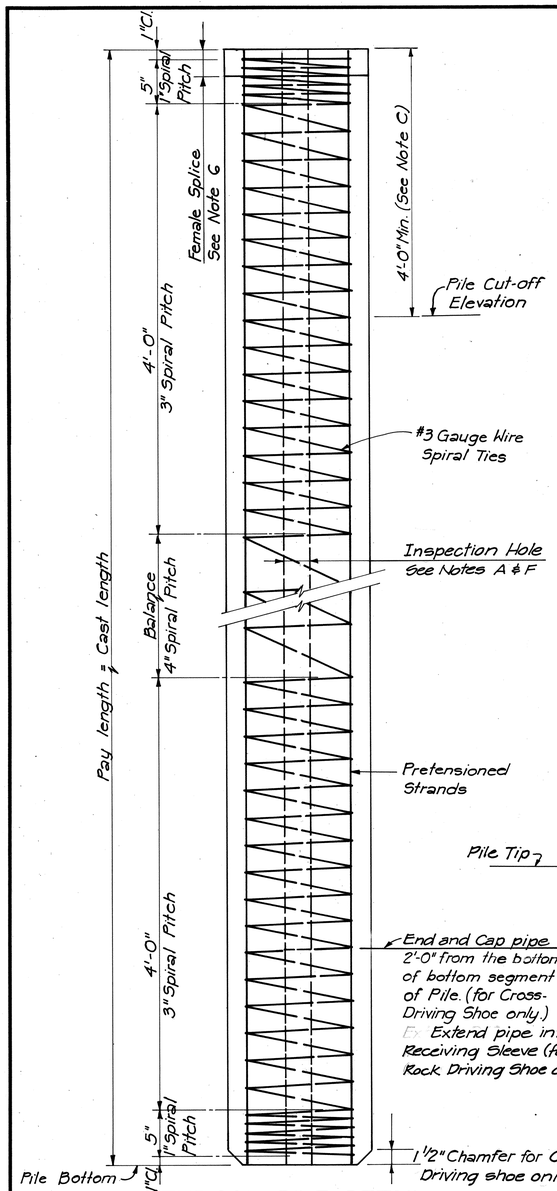


## TYPICAL PILE DETAIL

N.T.S.

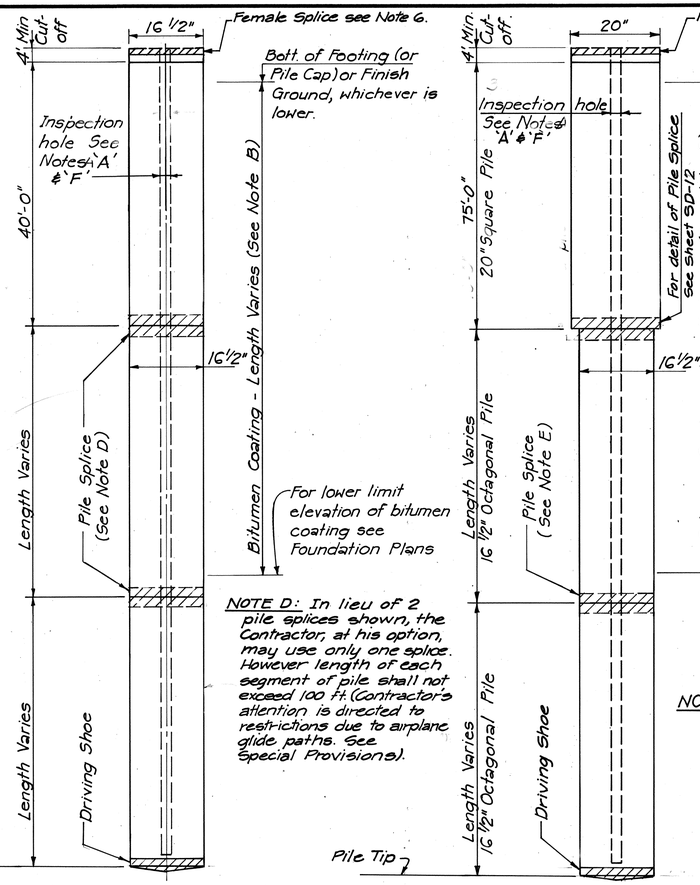


## PILE TYPE A

N.T.S.




## PILE TYPE B

N.T.S.

NOTE A: Provide inspection holes in all piles as follows:

1) All piles, except Load Test Piles, shall have a 3" PVC Pipe cast in the center of the pile. The pipe shall have a radial tolerance of 1/8" off-set from center of pile except that within 3 feet of the ends of pile segments the radial tolerance shall be 1/16" off-set from the center of the pile. The 3" PVC Pipe shall be Schedule 40 (3.500" OD, 3.068" ID) rigid pipe with socket couplings. The allowable deviation from straight for the pipe is 1/8" in any 10 feet of length.

2) Load Test Piles shall have a 5" Corrugated Plastic Pipe cast in the center of the pile instead of the 3" PVC pipe. The pipe shall be placed to the same tolerances specified from the 3" PVC pipe. For additional details see Note F.

NOTE B: The Bitumen Coating shall not protude into Footing or Pile Cap. When a pile is exposed above ground, as in the case of certain pile bents, the bitumen coating shall be up to the finished grade (or stream bed) only. If the Pile Tip ends higher than the estimated Pile Tip Elevation, the Contractor shall remove the bitumen coating from the pile head that is to be embedded into the footing (or Pile Cap), or the portion above the finished grade, as applicable.

NOTE C: Remove concrete over this length from top of top segment of pile. Leave Strands exposed, for embedment into footing (or pile cap). Cut-off of concrete shall be normal to the axis of pile. For pile cut-off elevations see Foundation Plans.

NOTE D: In lieu of 2 pile splices shown, the Contractor, at his option, may use only one splice. However length of each segment of pile shall not exceed 100 ft. (Contractor's attention is directed to restrictions due to airplane glide paths. See Special Provisions).

NOTE E: Contractor, at his option, may eliminate this splice. However length of each segment of pile shall not exceed 100 ft.. (Contractor's attention is directed to restrictions due to airplane glide paths. See Special Provisions)

NOTE F: The 5" Corrugated Plastic Pipe shall be similar or equal to, as determined by the Engineer, to the corrugated plastic drainage tubing manufactured by "Advance Drainage Systems" and shall have a wall thickness of 0.05 inches, 5.73 inches OD on outside of corrugation and 5.07 inches OD on inside of corrugation, and a pitch of 0.7 inches. The pipe shall be made in straight lengths, not coiled, of 10 feet each and be non-perforated. The 5" Corrugated Plastic Pipe shall be coupled to short 5" PVC pipe lengths at the pile splices. (See Pile Splice Locking Arrangement, Sheet No. SD-12.

## PILE NOTES :

1. Concrete shall have a minimum ultimate 28-day strength of 7000 psi. Required minimum ultimate concrete strength before release of strands = 4000 psi.
2. Pretensioned strands shall be 7 wire stress-relieved strands with an ultimate strength of 270 ksi. Diameter of strands shall be as shown on the Typical Pile Sections. Total loss due to creep, shrinkage, elastic shortening and relaxation of steel = 37,000 psi. Total working force shown on the Typical Pile Sections is the net force after all losses.
3. Non-prestressed reinforcing steel for dowels of splices and pile build-up shall be A.S.T.M. A615 Grade 60. Spiral ties shall be cold drawn A.S.T.M. A82
4. For location of Pile Types A and B see foundation plans.
5. Contractor has the option to use either of the Driving Shoes shown. All piles shall have driving shoes.
6. At the top of the top segment of the pile, a female splice shall be cast along with the pile. No pile shall be driven without a female part of the splice at the top of the pile. Cost of all splices in a pile shall be incidental to furnishing of Pile and will not be paid for separately.
7. Contractor shall submit shop drawings and calculations of the splice for approval by the Engineer at least 3 months prior to casting the piles. This is to provide sufficient time for review of shop drawings and calculations and for delivery time from the Supplier.
8. The splice shall be designed for an ultimate moment of 120 ft. Kips.
9. Portion of pile embedded into footing (or pile cap) shall be of sound concrete. Damaged portions shall be removed and pile shall be built-up to the cut-off elevation shown on the Plan.
10. The plumb of pile shall be checked for conformance to the allowable tolerances, as specified in the special provisions, before constructing the build-ups.
11. Work of cutting off Prestressed Concrete Piles or Concrete Build-ups shall be performed in such a manner as to avoid spalling or damaging the pile below cut-off. In case of such damage the pile shall be replaced or repaired by the Contractor at his own expense as directed by the Engineer.
12. Piles are to be manufactured & installed in accordance with the tolerances referred to in the Special Provisions. Piles not conforming to the tolerance shall be rejected and will not be paid for.
13. The Contractor shall furnish necessary labor and/or equipment to aid the Engineer in lowering and raising the plumb bob in the central inspection hole immediately after driving each pile. He shall also clean out any debris and/or soil in the central hole that interferes with the inspection. Such assistance shall be incidental to pile driving and will not be paid for separately.
14. Driving on pile build-ups shall not be permitted.

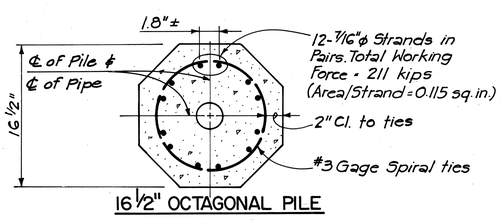


16 1/2" OCTAGONAL PILE

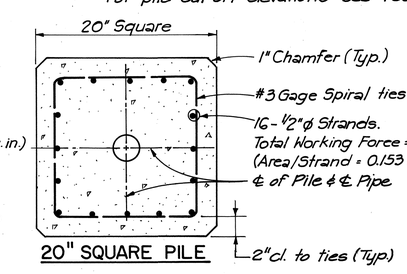


20" SQUARE PILE

## TYPICAL PILE SECTION

Scale : 1 1/2" = 1'-0"

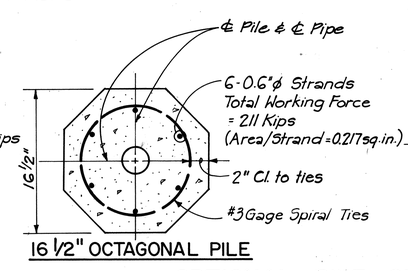


16 1/2" OCTAGONAL PILE

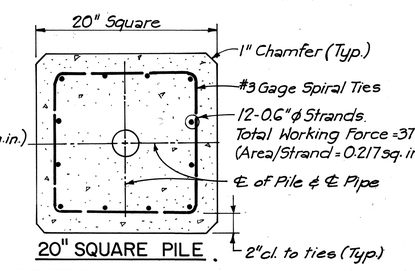


20" SQUARE PILE

## OPTIONAL PILE SECTION

Scale : 1 1/2" = 1'-0"

| DATE | REVISION |
|---|---|
| 3/29/78 | Revised Typical Pile Details, Sections, Pile Type A & B. Revised Notes A, B, 5, 6 & 13. Added Note F. |

STATE OF HAWAII
DEPARTMENT OF TRANSPORTATION
HIGHWAYS DIVISION

# PRESTRESSED CONCRETE PILES DETAILS

SHEET 1 OF 3

KEEHI INTERCHANGE
F.A.I. PROJECT NO. I-HI-I (131 ) 17
SCALE : AS SHOWN
DATE : AUG. 31, '77

VIJAY CHANDRA REGISTERED PROFESSIONAL ENGINEER No. 4120 HAWAII, U.S.A.

THIS WORK WAS PREPARED BY ME OR UNDER MY SUPERVISION.
Vijay Chandra
Signature

SHEET No. SD-10 OF SD-17 SHEETS

ORIGINAL PLAN | SURVEY PLOTTED BY | DRAWN BY | TRACED BY | DESIGNED BY | QUANTITIES BY | CHECKED BY | DATE | NOTE BOOK | No.

ADD. 341

| FED. ROAD DIST. NO. | STATE | FED. AID PROJ. NO. | FISCAL YEAR | SHEET NO. | TOTAL SHEETS |
|---|---|---|---|---|---|
| HAWAII | HAW. | I-HI-I(131):17 | 1977 | 342 | 394 |

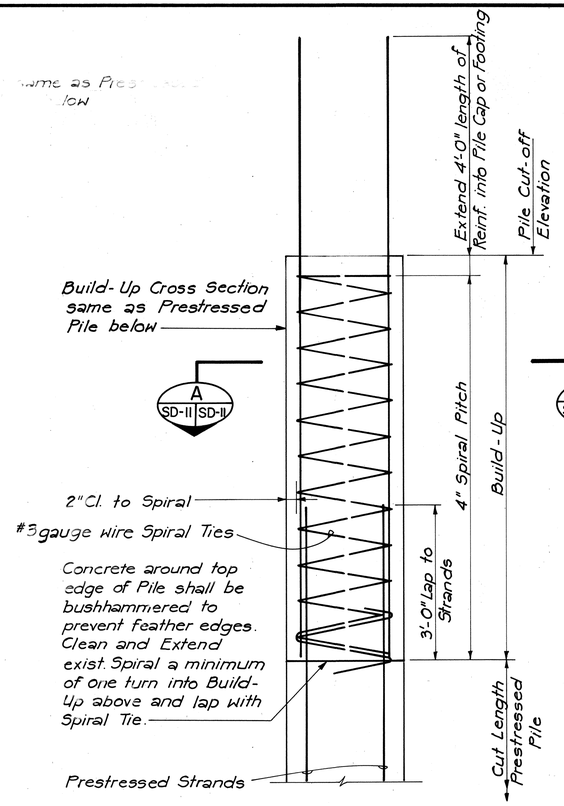


WITHOUT DRIVING

## TYPICAL PILE BUILD-UP DETAILS

Not to Scale

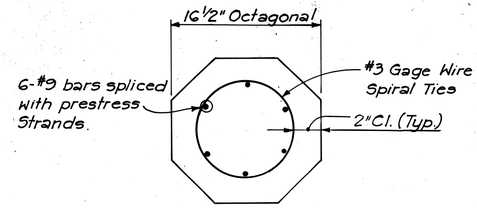


SECTION A SD-II SD-II

Scale: 1 1/2" = 1'-0"

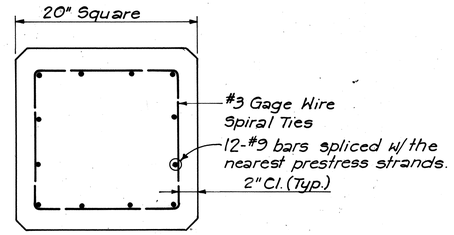


SECTION A SD-II SD-II

Scale: 1 1/2" = 1'-0"

NOTE:

Concrete in pile build-ups shall have a minimum comp. cyl. strength fc' of 5,000 psi at 28 days.

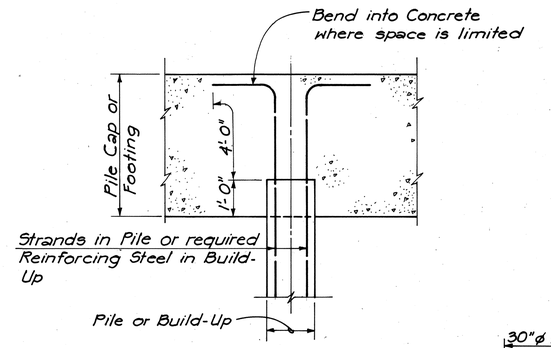


## PILE REINFORCEMENT EXTENSION DETAIL

Scale: 1/2" = 1'-0"

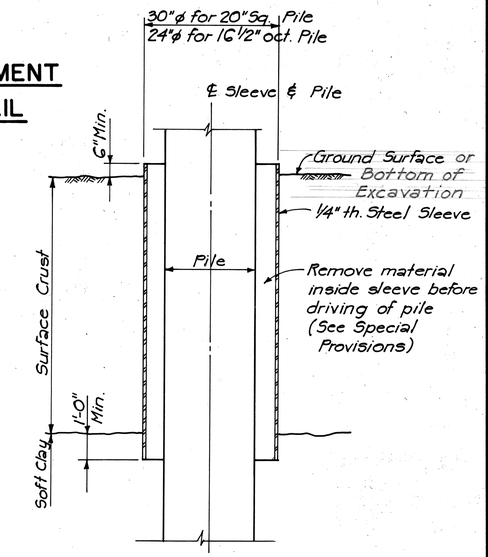


## STEEL SLEEVE DETAIL

Not to Scale

NOTE: No steel sleeve required when there is no bitumen coating on the pile.

Surface Crust is defined as the material between the ground line, or bottom of excavation, and the uniform soft clays (without the presence of granular materials).

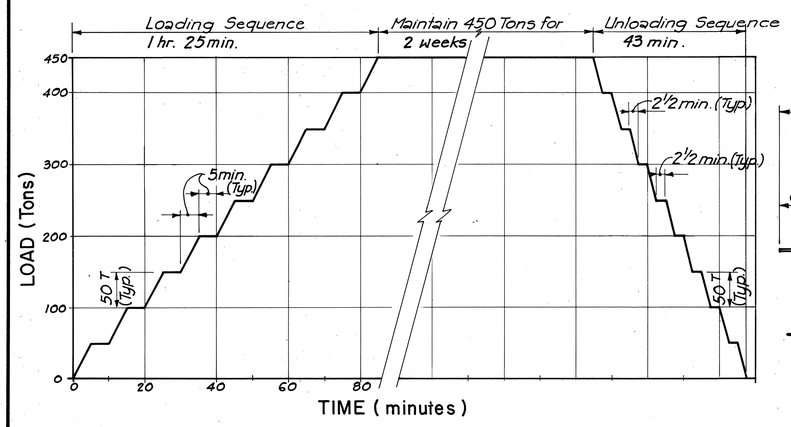


## PILE LOAD TEST SEQUENCE DIAGRAM

Scale: Horizontal - 1" = 20 Minutes
Vertical - 1" = 100 Tons

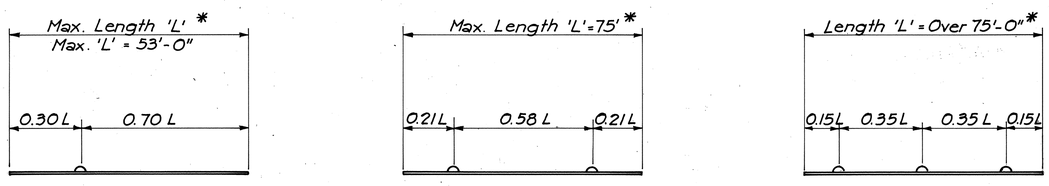


1-POINT PICK-UP | 2-POINT PICK-UP | 3-POINT PICK-UP

* The Length 'L' is the Distance, End-to-End of Pile before Cut-off

NOTE:

Unless special lifting devices are attached for pick-up points, pick-up points shall be plainly marked on all piles after removal of the forms, and all lifting shall be done at these points. The use of special embedded or attached lifting devices, the employment of pick-up points, or any other method of pick-up shall be subject to approval by Engineer.

| ORIGINAL PLAN | SURVEY PLOTTED BY | DATE |
|---|---|---|
| | DRAWN BY | |
| | TRACED BY | |
| NOTE BOOK | DESIGNED BY | |
| | QUANTITIES BY | |
| No. | CHECKED BY | |

VIJAY CHANDRA REGISTERED PROFESSIONAL ENGINEER No. 4120 HAWAII, U.S.A.

THIS WORK WAS PREPARED BY ME OR UNDER MY SUPERVISION.

Vijay Chandra
Signature

STATE OF HAWAII
DEPARTMENT OF TRANSPORTATION
HIGHWAYS DIVISION

# PRESTRESSED CONCRETE PILES DETAILS

SHEET 2 OF 3

KEEHI INTERCHANGE
F.A.I. PROJECT NO. I-HI-I(131):17
SCALE: AS SHOWN DATE: AUG. 31, '77

SHEET NO. SD-11 OF SD-17 SHEETS

| FED. ROAD DIST. NO. | STATE | FED. AID PROJ. NO. | FISCAL YEAR | SHEET NO. | TOTAL SHEETS |
|---|---|---|---|---|---|
| HAWAII | HAW. | I-HI-I(131):17 | 1977 | 343 | 394 |

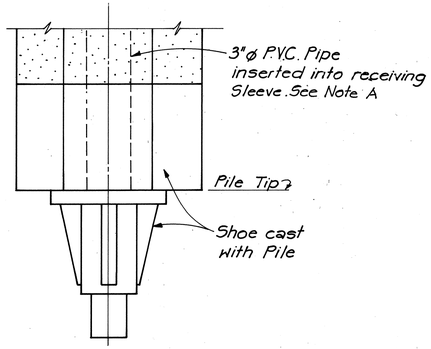


ELEVATION

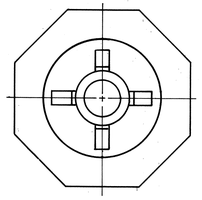

PLAN

## ROCK DRIVING SHOE

Not to Scale

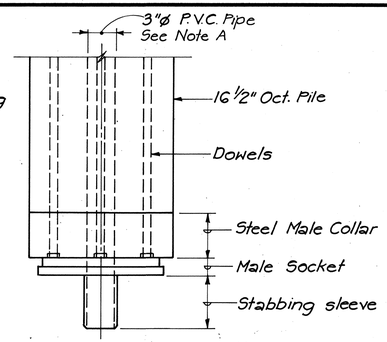


ELEVATION

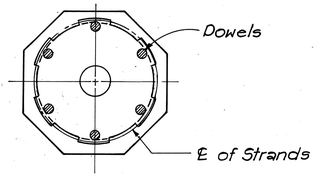


PLAN

MALE END

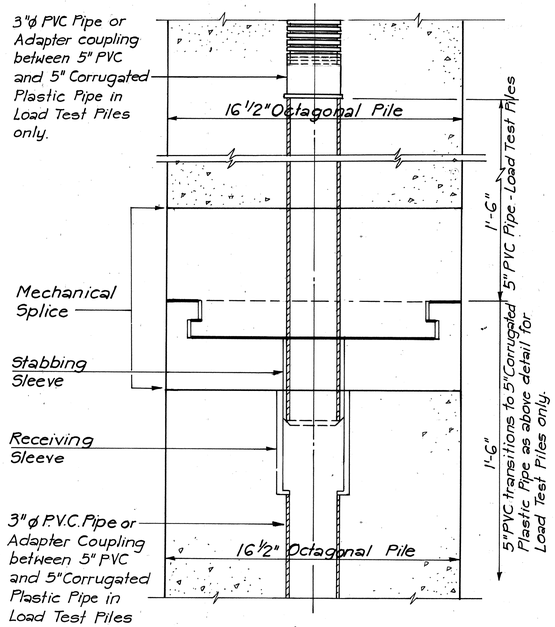


BETWEEN 16 1/2" OCT. PILES

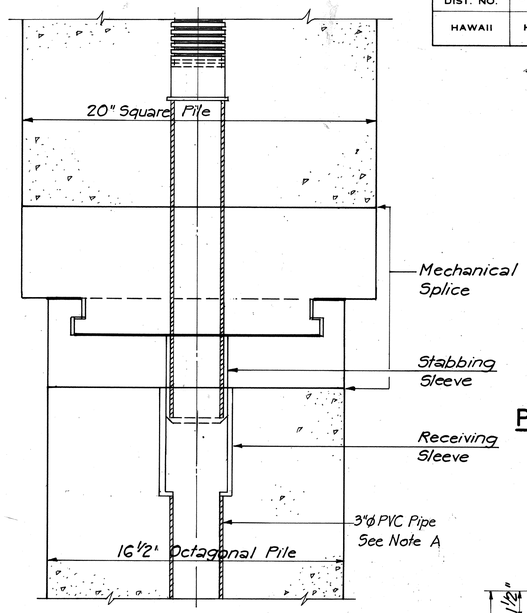


BETWEEN 20" SQ. PILE & 16 1/2" OCT. PILE

NOTE: 5" PVC Pipe & 5" Corrugated Plastic Pipe similar to Details shown on 16 1/2" Oct. Piles

## PILE SPLICE LOCKING ARRANGEMENT

Scale: 3" = 1'-0"

NOTE A: 3" PVC Pipe used throughout pile length except on Load Test Piles. Load Test Piles shall have a 5"ø central hole made by 5" Corrugated Plastic Pipe & short 5" PVC Segments near splices as shown above

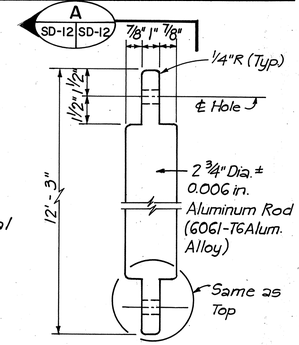


## PLUMB BOB DETAIL B

Scale: 3" = 1'-0"

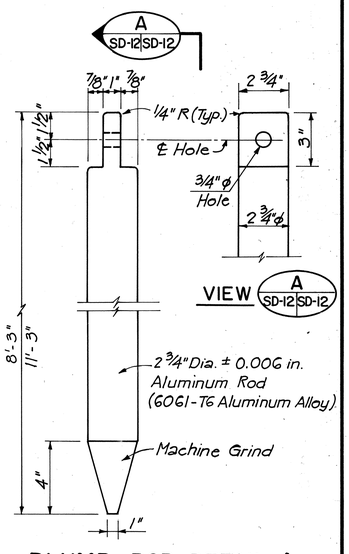


## PLUMB BOB DETAIL A

(2 required)
Scale: 3" = 1'-0"

**PLUMB BOB NOTES:**

1. All sharp edges shall be rounded.
2. Allowable deviation from straight = 1/8"

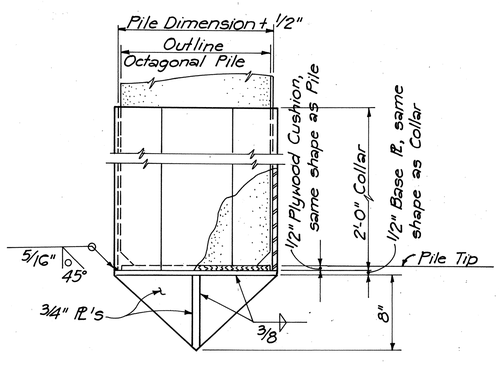


ELEVATION

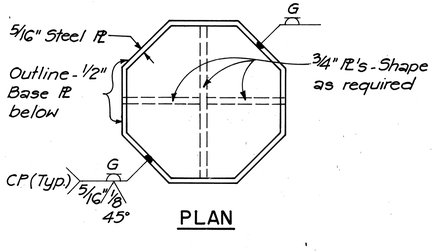


PLAN

## CROSS DRIVING SHOE

Not to Scale

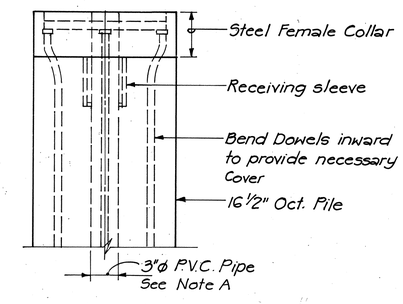


ELEVATION

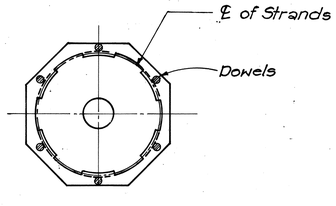


PLAN

FEMALE END

## 16 1/2" OCTAGONAL PILE SPLICE

Scale: 1 1/2" = 1'-0"

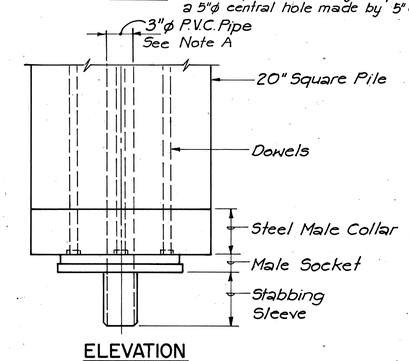


ELEVATION

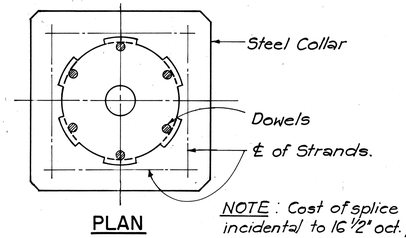


PLAN

MALE END

NOTE: Cost of splice incidental to 16 1/2" oct. pile

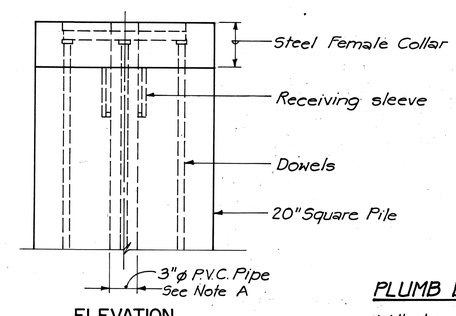


ELEVATION

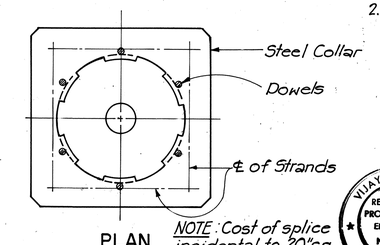


PLAN

FEMALE END

NOTE: Cost of splice incidental to 20" sq. pile

## 20" SQUARE PILE SPLICE

Scale: 1 1/2" = 1'-0"

VIJAY CHANDRA REGISTERED PROFESSIONAL ENGINEER No. 4120 HAWAII, U.S.A.

THIS WORK WAS PREPARED BY ME OR UNDER MY SUPERVISION.

Vijay Chandra
Signature

| DATE | REVISION |
|---|---|
| 3/23/78 | Added Plumb Bob Detail B. Revised Detail A. Added 5" Corr. Plastic Pipe to Load Test Piles. Added Note A. |

STATE OF HAWAII
DEPARTMENT OF TRANSPORTATION
HIGHWAYS DIVISION

# PRESTRESSED CONCRETE PILES DETAILS

SHEET 3 OF 3

KEEHI INTERCHANGE
F.A.I. PROJECT NO. I-HI-I (131):17
SCALE: AS SHOWN
DATE: AUG. 31, 77

SHEET No. SD-12 OF SD-17 SHEETS

| ORIGINAL PLAN | SURVEY PLOTTED BY | DATE |
|---|---|---|
| | DRAWN BY | |
| | TRACED BY | |
| | DESIGNED BY | |
| NOTE BOOK | QUANTITIES BY | |
| No. | CHECKED BY | |

ADD. 343

| FED. ROAD DIST. NO. | STATE | FED. AID PROJ. NO. | FISCAL YEAR | SHEET NO. | TOTAL SHEETS |
|---|---|---|---|---|---|
| HAWAII | HAW. | I-HI-I(131):17 | 1977 | 344 | 394 |

NOTE 'A'

The Contractor shall determine the thickness of the crust at the locations of load tests before proceeding with the load tests. The cribbing base dimensions are 10' x 24' for a crust of 6' thickness or more. In case the thickness of crust is found to be between 4' to 6', the cribbing base shall be increased to 10'x28'. If the thickness of crust is less than 4 feet, the Engineer shall designate a new location(s) for the load test(s).

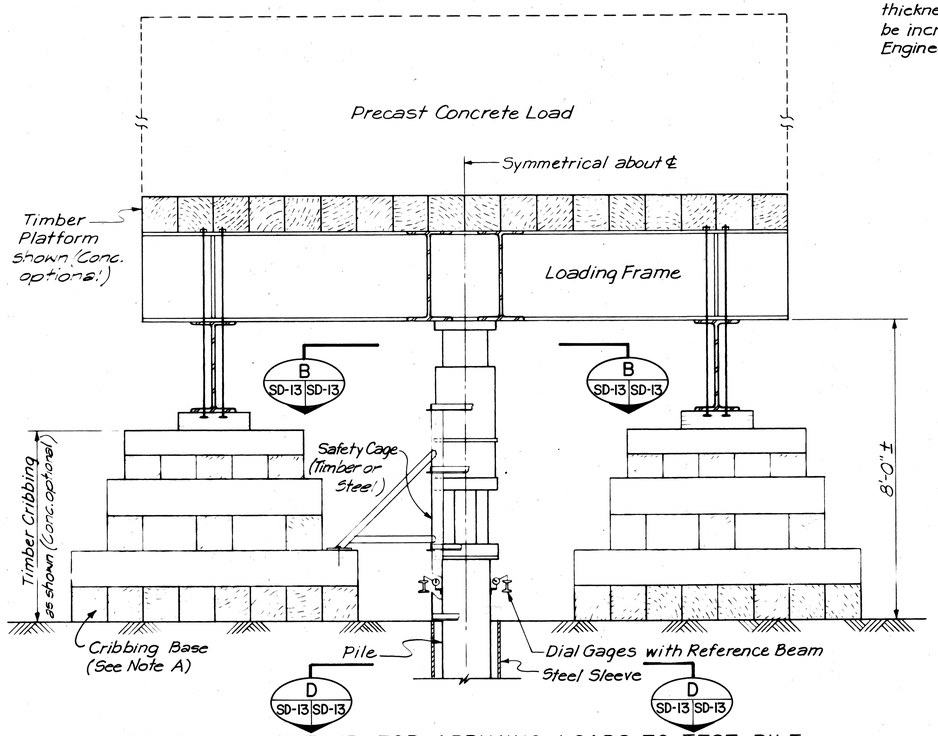


SCHEMATIC SET-UP FOR APPLYING LOADS TO TEST PILE

SCALE: 1/2" = 1'-0"

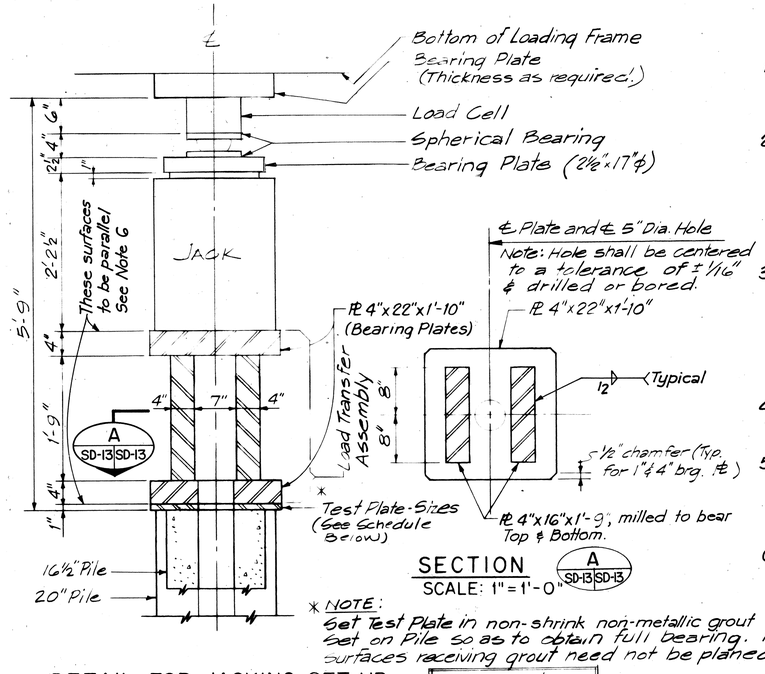


SECTION A SD-13 SD-13

SCALE: 1" = 1'-0"

* NOTE:
Set Test Plate in non-shrink non-metallic grout set on Pile so as to obtain full bearing. Plate surfaces receiving grout need not be planed.

DETAIL FOR JACKING SET-UP

SCALE: 1" = 1'-0"

| Schedule Test Plate-Sizes | | |
|---|---|---|
| Pile size | Plate size | Hole size |
| 20" | 1"x22"x1'-10" | 5"ϕ |
| 16½" | 1"x18"x1'-6" | 5"ϕ |

## LOAD FRAME NOTES:

1. The Loading Frame shall be designed to support load required to permit the Test Pile to be loaded to 500 Tons. Loading blocks to be provided by Contractor.
2. Design of Frame shall conform to the latest Edition of the Manual of Steel Construction by the American Institute of Steel Construction. Allowable stresses in this manual may be increased by 20% for main structural members. This increase in allowable stresses will not be allowed for Connections, Bolts and Welds.
3. At the option of the Contractor, the Loading Frame may be fabricated from new or used structural steel shapes; or loading frames previously used in other projects may be used provided the design and construction of the frame to be furnished conforms to the requirements in Notes 1 and 2 above.
4. Timber Cribbing shall have a soil bearing area of not less than 160 square feet at each side of loading Jack.
5. Timber Cribbing and Platform may be of new or used sound timber and shall be of adequate size and grade to safely carry the loads imposed upon them resulting from the Load Tests.
6. Surfaces of all bearing plates shall be planed or milled smooth to provide full surface contact, Top & Bottom of Load Transfer Assembly to be planed after welding.

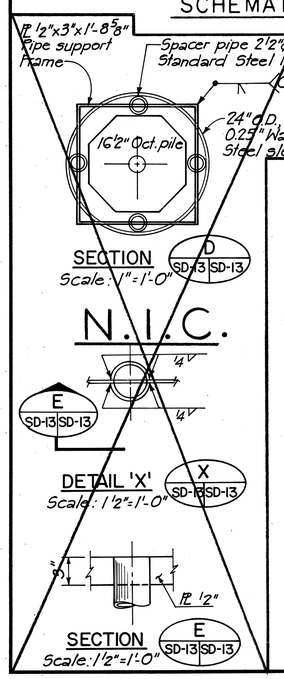


SECTION D SD-13 SD-13

Scale: 1" = 1'-0"

N.I.C.

DETAIL 'X'

Scale: 1½" = 1'-0"

SECTION E SD-13 SD-13

Scale: 1½" = 1'-0"

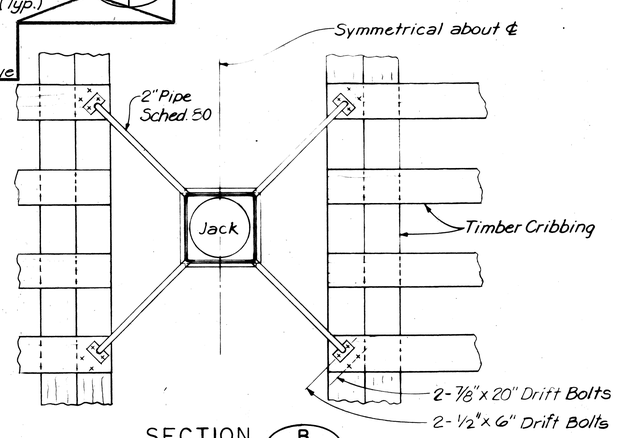


SECTION B SD-13 SD-13

SAFETY CAGE DETAIL

Scale: 1" = 1'-0"

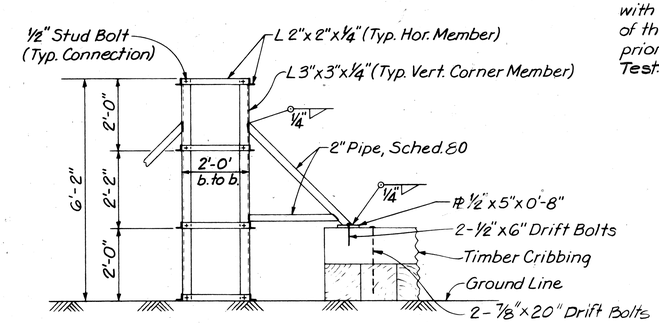


TYPICAL ELEVATION

NOTE 'B'

Loading set-up of Load Test For Trestle Structure shall provide similar detail shown on Schematic Set-up For Applying Loads To Test Pile on this sheet, including safety cage

NOTE 'C'

Load Test Piles shall be backfilled and Sleeve removed in accordance with Section 505.03(L) of the Special Provisions prior to performing the Test.

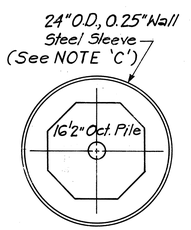


16½" OCT. PILE

SECTION D SD-13 SD-13

| DATE | REVISION |
|---|---|
| 11/16/78 | Deleted "LOAD TEST FOR TRESTLE STRUCTURE", SECTION 'E' & DETAIL 'X'. Revised SECTION 'D'. Added NOTE 'C'. |

STATE OF HAWAII
DEPARTMENT OF TRANSPORTATION
HIGHWAYS DIVISION

# LOAD TEST SET-UP

KEEHI INTERCHANGE
F.A.I. PROJECT NO. I-HI-I (131):17

SCALE: AS SHOWN DATE: AUG. 31, '77

SHEET NO. SD-13 OF SD-17 SHEETS

THIS WORK WAS PREPARED BY ME OR UNDER MY SUPERVISION

John P. Johnson

SURVEY PLOTTED BY
DRAWN BY
TRACED BY
DESIGNED BY
QUANTITIES BY
CHECKED BY
ORIGINAL PLAN
NOTE BOOK
NO.
DATE

C.O. 344

| FED. ROAD DIST. NO. | STATE | FED. AID PROJ. NO. | FISCAL YEAR | SHEET NO. | TOTAL SHEETS |
|---|---|---|---|---|---|
| HAWAII | HAW. | F-HI-(131)17 | 1977 | 345 | 394 |

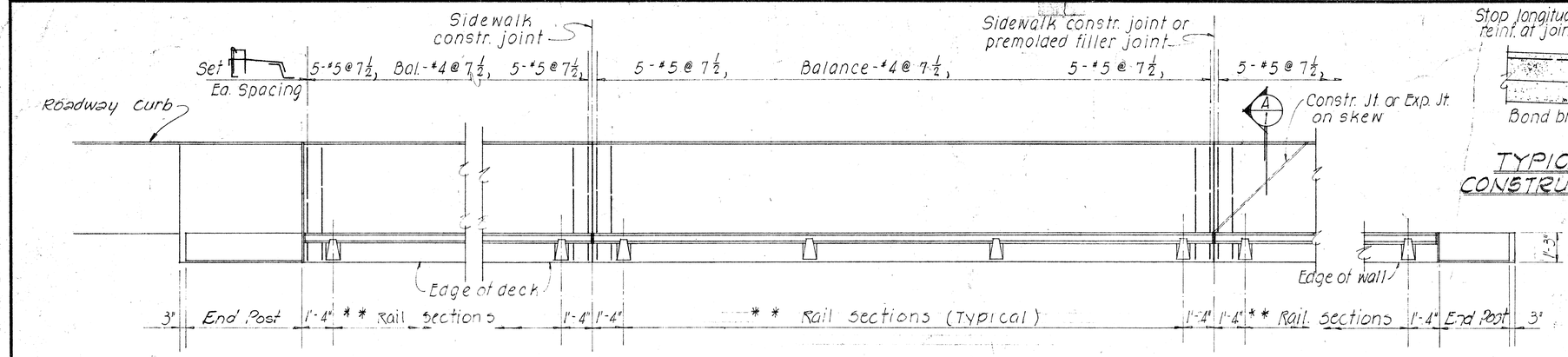


AT BRIDGE END POST — INTERMEDIATE — AT RETAINING WALL END POST

## INTERMEDIATE RAILING PLAN

SCALE: 3/8" = 1'-0"

**** NOTE!!**
The contractor shall layout the railing to provide 3 continuous panels whenever possible. 2 or 4 continuous panels will be permitted to complete the layout when 3 continuous panels cannot be made. Single panels will not be permitted

**NOTES!!**
1. Rail Posts shall be normal to grade
2. Provide double posts at each expansion jt., fixed bridge jt. & as shown on detailed drawings.

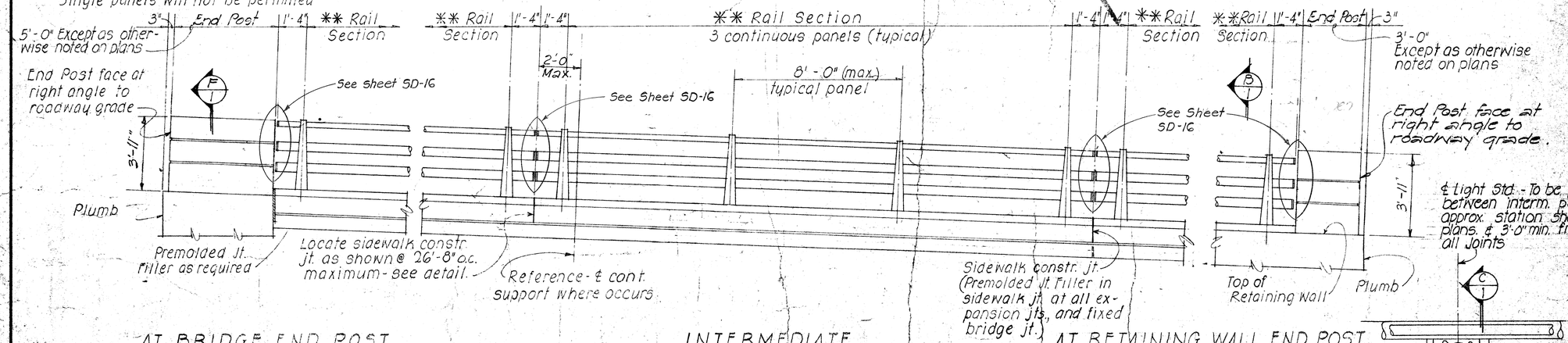


AT BRIDGE END POST — INTERMEDIATE — AT RETAINING WALL END POST

## EXTERIOR RAILING ELEVATION

SCALE: 3/8" = 1'-0"

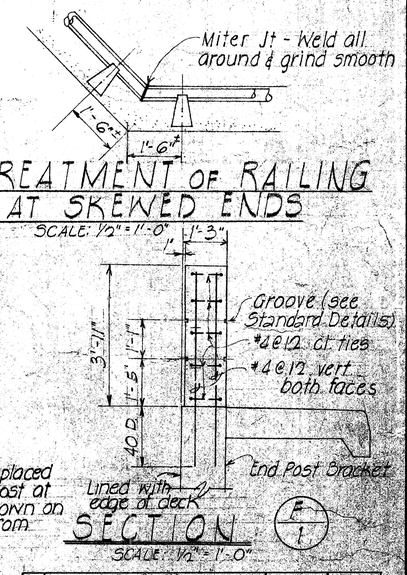


## TREATMENT OF RAILING AT SKEWED ENDS

SCALE: 1½" = 1'-0"

## SECTION

SCALE: 1½" = 1'-0"

| NO. | REVISION | APPROVED BY | DATE |
|---|---|---|---|
| 1. | Clarify sidewalk reinf. | H.C. | 10-13-10 |
| 2. | Change title block rail designation. Change note. | H.C. | 2-7-12 |

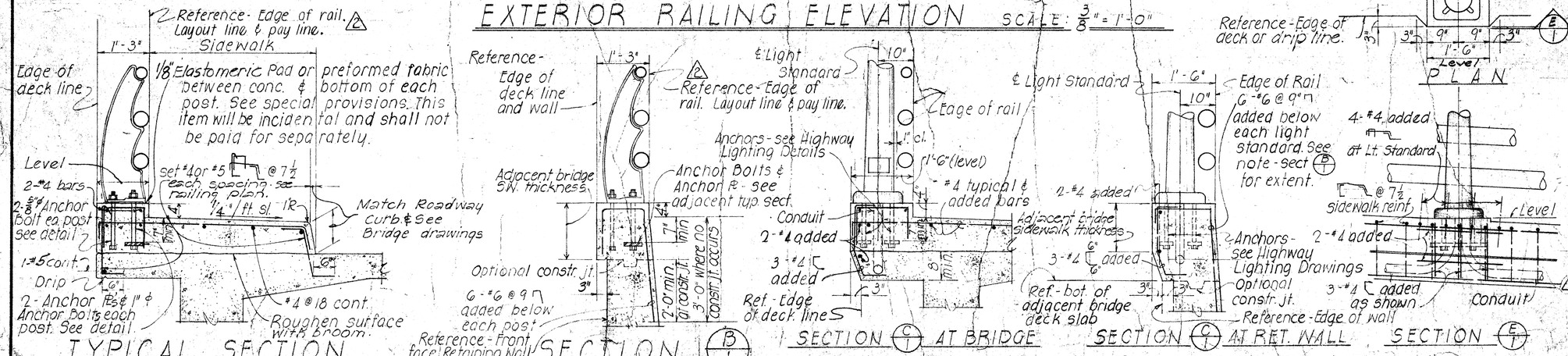


## TYPICAL SECTION

SCALE: 3/4" = 1'-0"

## SECTION B/1

SCALE: 3/4" = 1'-0"

SECTION C/1 AT BRIDGE — SECTION C/1 AT RET. WALL — SECTION E/1

## DETAILS OF RAILING AT LIGHT STANDARD

SCALE: 3/4" = 1'-0

## PLAN

THIS WORK WAS PREPARED BY ME OR UNDER MY SUPERVISION.

JOHN Y. JOHNSON — REGISTERED PROFESSIONAL ENGINEER No. 3647 — HAWAII, U.S.A.

STATE OF HAWAII
DEPARTMENT OF TRANSPORTATION
HIGHWAYS DIVISION

# STANDARD DETAILS
## ALUMINUM BRIDGE RAILING
### THREE RAIL COMBINATION TYPE

KEEHI INTERCHANGE
F.A.I. PROJ. NO. I-HI-1(131) : 17
SCALE: AS SHOWN — Date: AUG. 31, 1977
SHEET No. SD-14 OF SD-17 SHEETS DB-203

ORIGINAL PLAN — SURVEY PLOTTED BY — DRAWN BY — TRACED BY — DESIGNED BY — QUANTITIES BY — CHECKED BY — DATE — NOTES BOOK No.

PRINTED ON NO. 1000H CLEARPRINT

| FED. ROAD DIST. NO. | STATE | FED. AID PROJ. NO. | FISCAL YEAR | SHEET NO. | TOTAL SHEETS |
|---|---|---|---|---|---|
| HAWAII | HAW. | I-H-1-(19)-17 | 1977 | 346 | 394 |

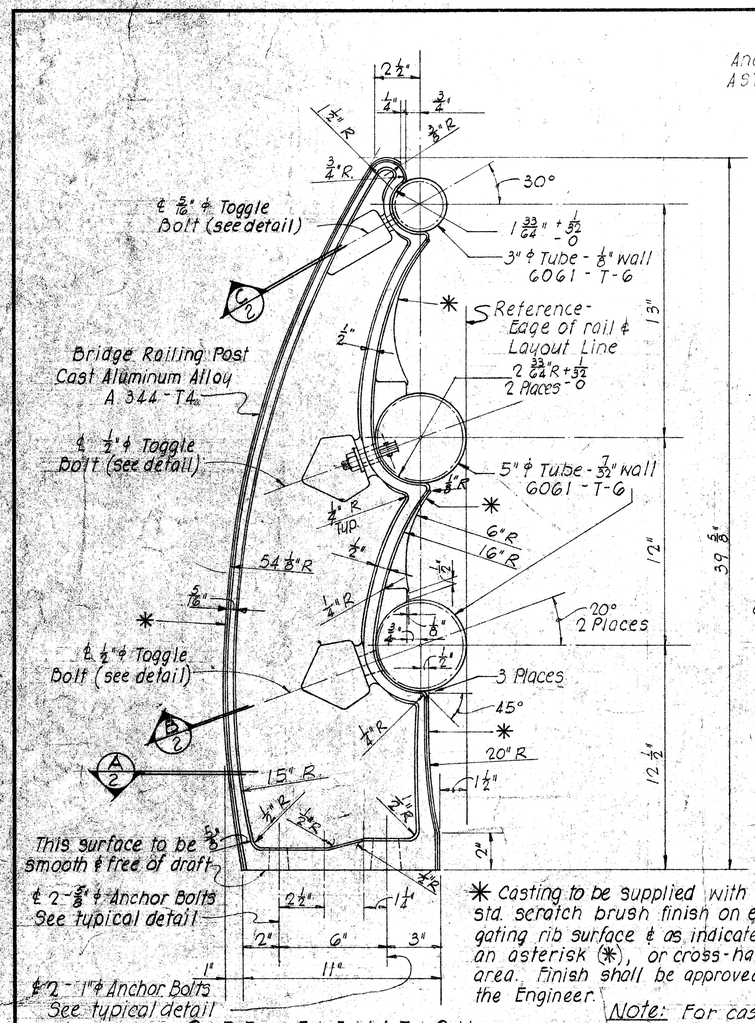


SIDE ELEVATION

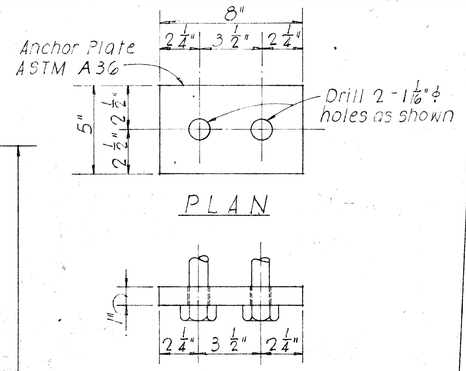


PLAN

ELEVATION

## ANCHOR PLATE DETAIL

SCALE: 3" = 1'-0"

**NOTE!!**

Unless otherwise specified, draft angles = 3°, corner radii - 1/8" R, Fillet radii = 3/8" radii, casting tolerance = ± 1/16", and wall thickness = ± 1/32".

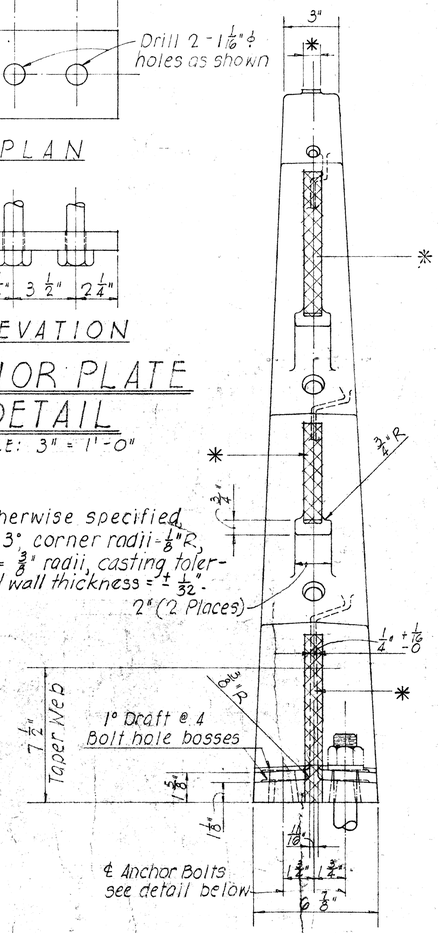


END ELEVATION

* Casting to be supplied with a std. scratch brush finish on entire gating rib surface ℄ as indicated by an asterisk (*), or cross-hatched area. Finish shall be approved by the Engineer.

Note: For cast post and rails, see Specifications.

## TYPICAL RAIL POST DETAILS

SCALE: 3" = 1'-0"

**NOTE:**

Toggle Bolt - Cadmium plating on steel - Type NS 0.0005" thick ASTM - A165 (all parts).

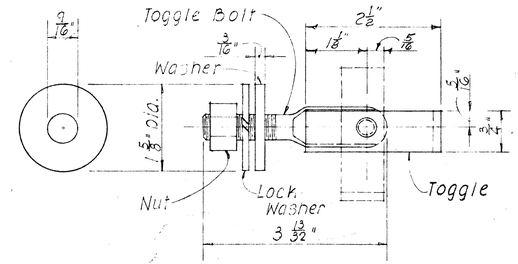


WASHER

SIDE ELEVATION ASSEMBLAGE

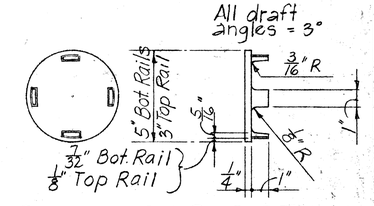


## RAIL CAP DETAIL

SCALE: 3" = 1'-0"

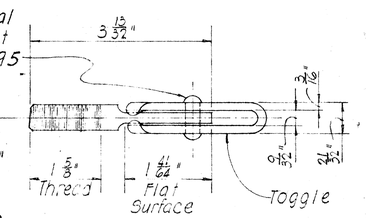


TOP PLAN

## 1/2" ϕ STEEL TOGGLE BOLT DETAIL

**NOTE!!**

1" dia. bolt washer size 2 1/2" O.D. x 1 1/16" I.D. x 11/64" thick.
3/8" dia. bolt washer size 1 3/4" O.D. x 11/16" I.D. x 7/64" thick

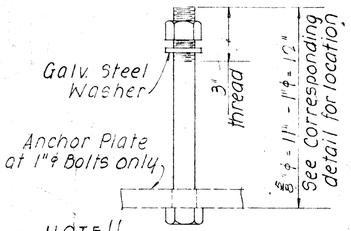


**NOTE!!**

1" ϕ & 3/8" ϕ Galvanized Steel ASTM A 325 Anchor Bolts.

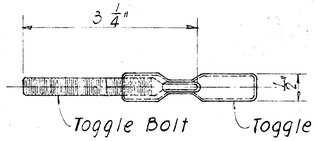


TOP PLAN

## TYPICAL ANCHOR BOLT DETAIL

SCALE: 3" = 1'-0"

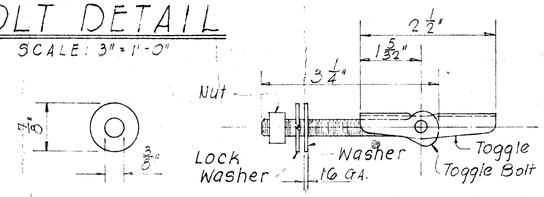


WASHER

ELEVATION ASSEMBLAGE

## 5/16" ϕ STEEL TOGGLE BOLT DETAIL

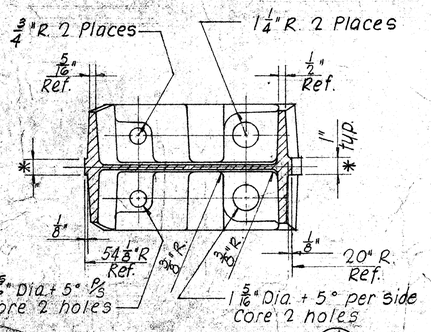


SECTION A/2

SCALE: 3" = 1'-0"

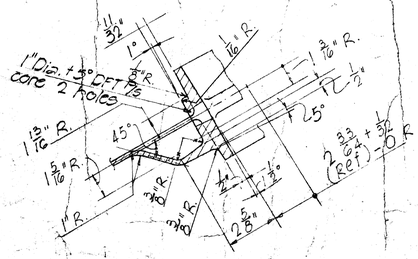


SECTION B/2

SCALE: 3" = 1'-0"

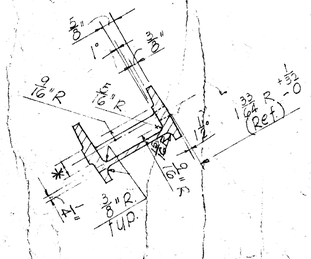


SECTION C/2

SCALE: 3" = 1'-0"

APPROVAL RECOMMENDED: Paul T. Yamashita — BRIDGE DESIGN ENGINEER — DATE 1-23-70

APPROVED For ASSISTANT CHIEF, ENGINEERING: Paul T. Yamashita — DATE 1-28-70

| NO. | REVISION | APPROVED BY | DATE |
|---|---|---|---|
| 1 | Change title block rail designation. Delete note. | N.I. | 2-4-72 |

STATE OF HAWAII
DEPARTMENT OF TRANSPORTATION
HIGHWAYS DIVISION

STANDARD DETAILS

1 ALUMINUM BRIDGE RAILING

THREE RAIL COMBINATION TYPE

Date

SHEET No. 5D-15 OF 5D-17 SHEETS DB-203-2

ORIGINAL PLAN | STATE FILMED BY | DATE | DRAWN BY | TRACED BY | DESIGNED BY | CHECKED BY | QUANTITIES BY | NOTE BOOK

PRINTED ON NO. 1000R BLUEPRINT

| FED. ROAD DIST. NO. | STATE | FED. AID PROJ. NO. | FISCAL YEAR | SHEET NO. | TOTAL SHEETS |
|---|---|---|---|---|---|
| HAWAII | HAW. | I-HI-1(131):17 | 1977 | 347 | 394 |

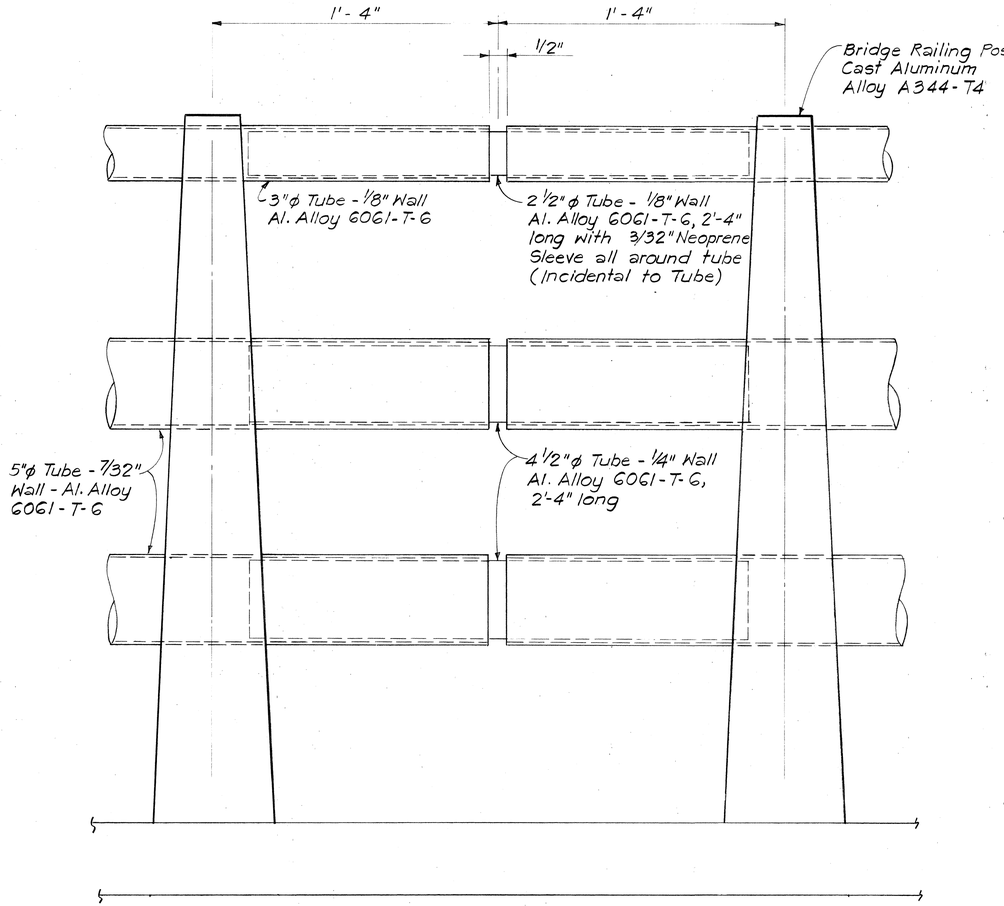


DETAIL AT INTERMEDIATE JOINTS

Scale: 3" = 1'-0"

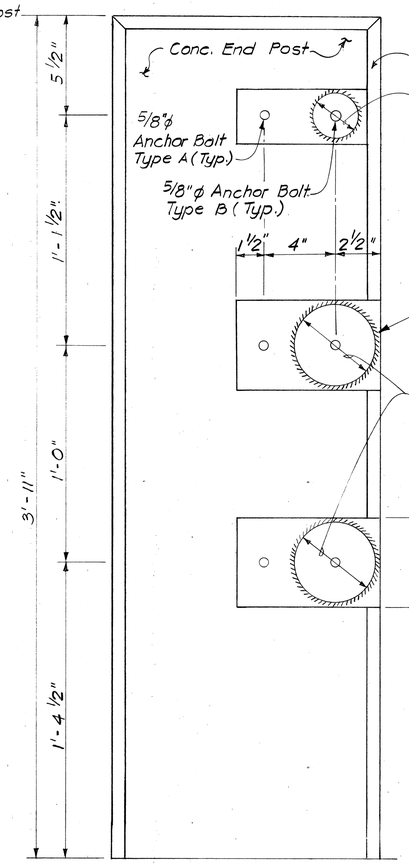


SECTION A-A

Scale: 3" = 1'-0"

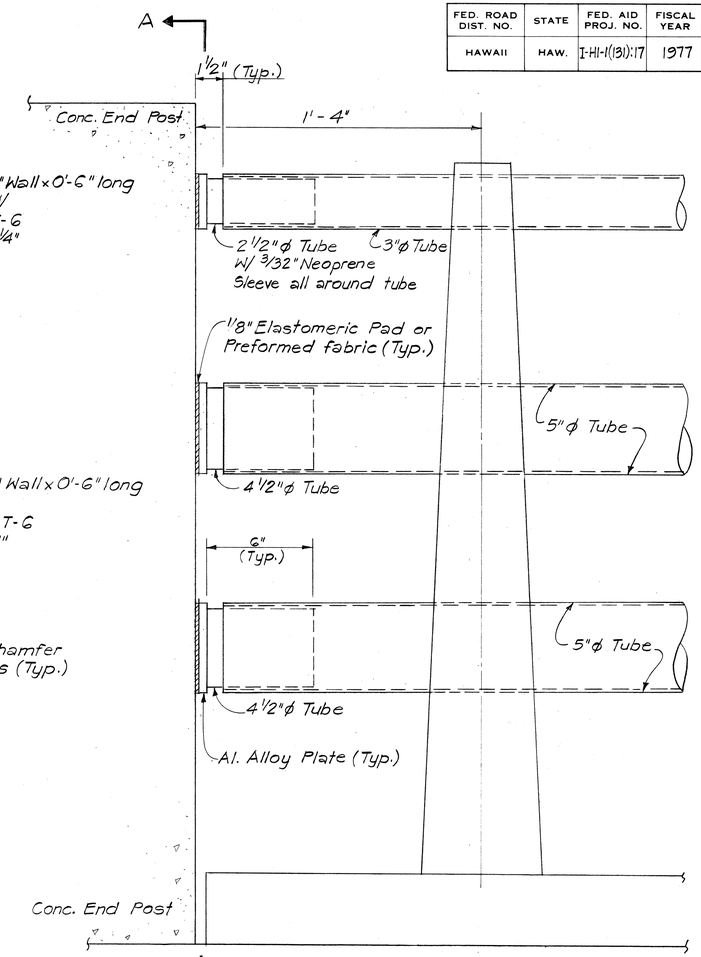


DETAIL AT END POST

Scale: 3" = 1'-0"

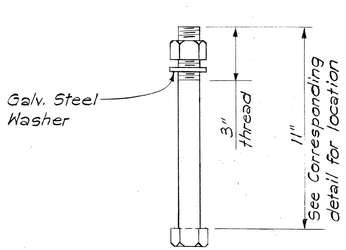


TYPICAL TYPE A
ANCHOR BOLT DETAIL

N.T.S.

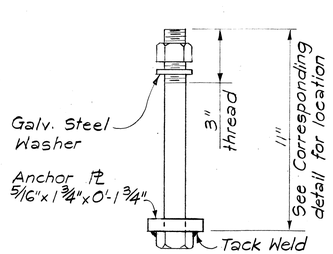


TYPICAL TYPE B
ANCHOR BOLT DETAIL

N.T.S.

NOTE

5/8"ϕ dia. bolt washer size
1 3/4" O.D. x 11/16" I.D. x 7/64" thick

5/8" ϕ Galvanized Steel ASTM
A 325 Anchor Bolts

| ORIGINAL PLAN | | DATE |
|---|---|---|
| | SURVEY PLOTTED BY | |
| | DRAWN BY | |
| | TRACED BY | |
| NOTE BOOK | DESIGNED BY | |
| | QUANTITIES BY | |
| No. | CHECKED BY | |

JOHN P. JOHNSON
REGISTERED PROFESSIONAL ENGINEER
No. 3647
HAWAII, U.S.A.

THIS WORK WAS PREPARED BY ME OR UNDER MY SUPERVISION.

John P. Johnson

STATE OF HAWAII
DEPARTMENT OF TRANSPORTATION
HIGHWAYS DIVISION

**RAILING JOINT DETAILS**

ALUMINUM BRIDGE RAILING

THREE RAIL COMBINATION TYPE

KEEHI INTERCHANGE
F.A.I. PROJ. NO. I-HI-1(131):17

SCALE: AS SHOWN DATE: Jan. 13, 1978

SHEET No. 5D-16 OF 5D-17 SHEETS

| FED. ROAD DIST. NO. | STATE | FED. AID PROJ. NO. | FISCAL YEAR | SHEET NO. | TOTAL SHEETS |
|---|---|---|---|---|---|
| HAWAII | HAW. | I-HI-1(131):17 | 1977 | 348 | 394 |

## CURVE DATA

Δ = 40°06'25"
R = 10'
Lc = 7'

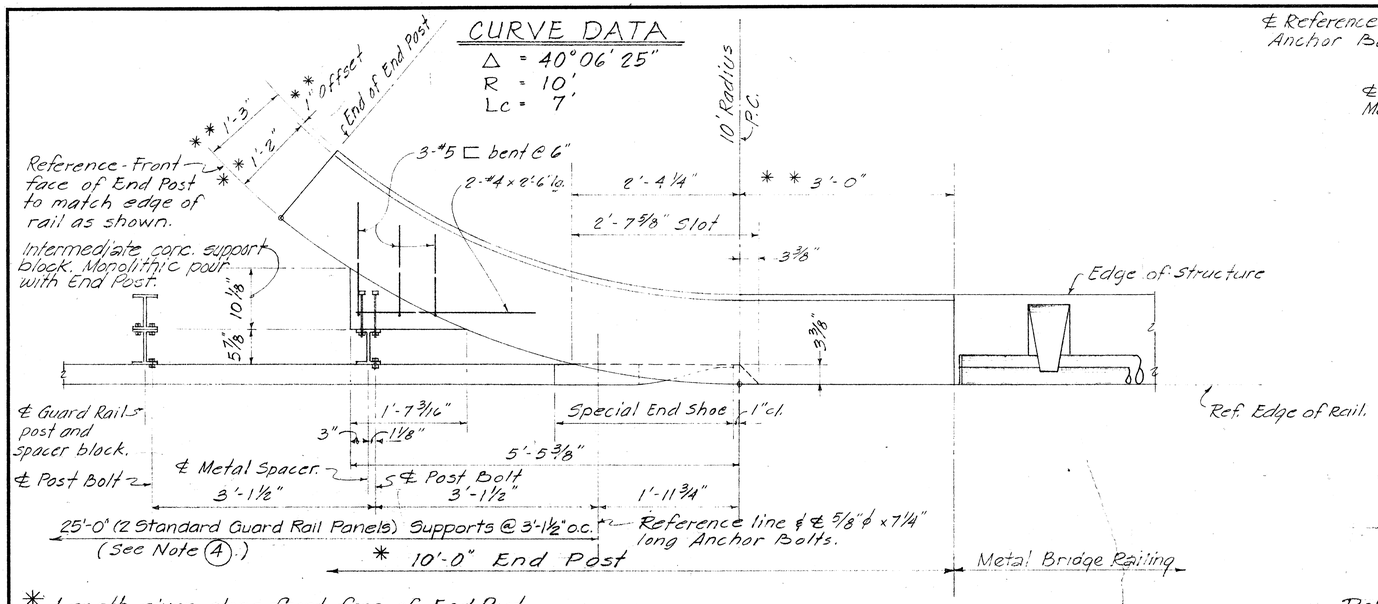


* Length given along front face of End Post.

## PLAN Scale: 1" = 1'-0"

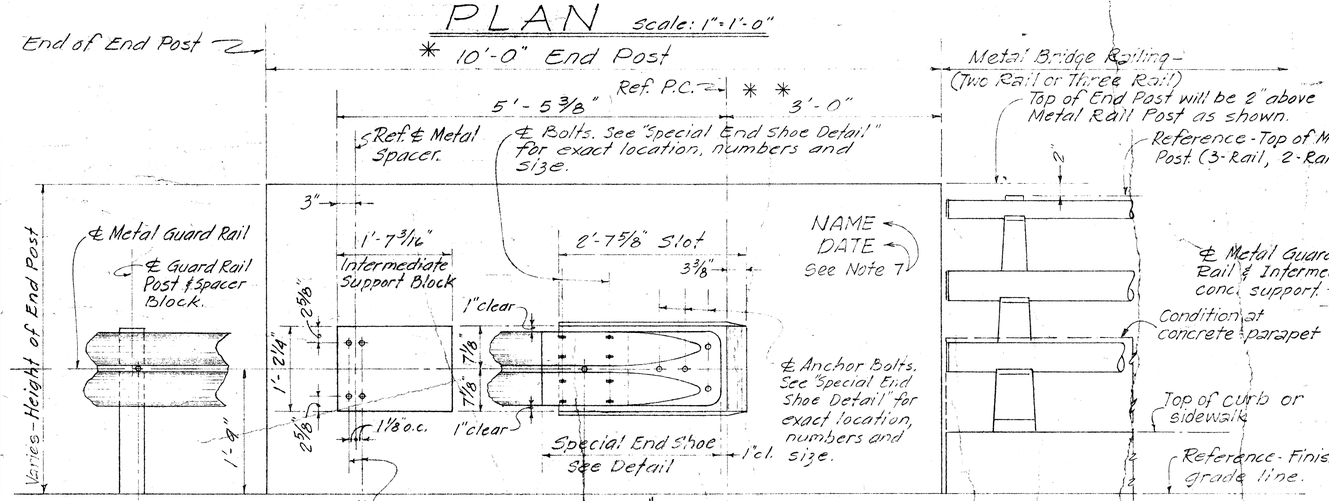


## ELEVATION

Scale: 1" = 1'-0"

** Dimensions and Reinf. size and spacing to be as detailed except as otherwise noted on detail drawings.

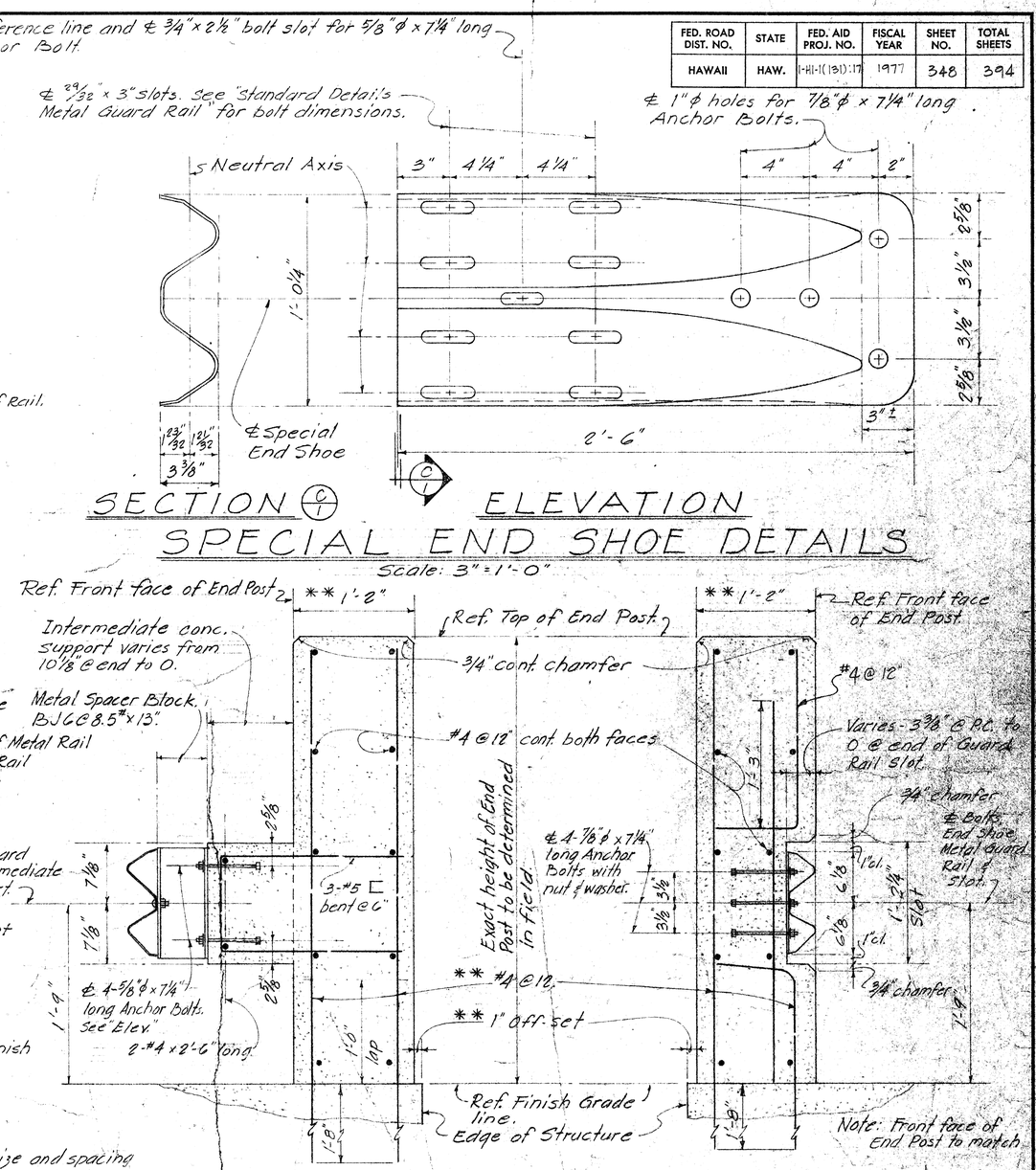


## SECTION (C/1) ELEVATION

## SPECIAL END SHOE DETAILS

Scale: 3" = 1'-0"

## SECTION (A/1) Scale 1 1/2" = 1'-0"

## SECTION (B/1) Scale 1 1/2" = 1'-0"

NOTES:

1. All Anchor Bolts shall be High Strength bolts conforming to the requirements of ASTM A-325.
2. All shoe assembly, including anchor bolts, nuts and washers, shall be galvanized.
3. Special End Shoe shall be Fabricated from 10 gage steel conforming to the requirements of AASHO 180.
4. First 25'-0" of guard rail adjoining "Special End Shoe" shall be galvanized steel.
5. Anchor Bolt length given under bolt head.
6. These details are applicable for Connections to Retaining walls also.
7. Place name of structure as shown. For location, see "Plan" on Contract Drawing. Date shown will be year structure is completed. Letter size and detail see standard Drawing DB-100.

| NO. | REVISION | APPROVED BY | DATE |
|---|---|---|---|
| 1. | Note 4 revised, 3'-1 1/2" post spacing extended to 25'-0". Note 7 added. | H.T. | 2-27-77 |

APPROVAL RECOMMENDED: Paul T. Yamashita — BRIDGE DESIGN ENGINEER — DATE 1-23-70

APPROVED: Paul T. Yamashita — for ASSISTANT CHIEF ENGINEERING — DATE 1-28-70

STATE OF HAWAII
DEPARTMENT OF TRANSPORTATION
HIGHWAYS DIVISION

# STANDARD DETAILS
# METAL GUARD RAIL CONNECTION AT VERTICAL FACE TYPE END POST

Scale: As shown Date

SHEET No. SD-17 OF SD-17 SHEETS DB-204

| ORIGINAL PLAN | SURVEY PLOTTED BY | DATE |
|---|---|---|
| | DRAWN BY | " |
| | TRACED BY | " |
| NOTE BOOK | DESIGNED BY | " |
| | QUANTITIES BY | " |
| No. | CHECKED BY | " |

K+E CRYSTALENE® LA 2020 TRACING PAPER