FED. ROAD DIST. NO.	STATE	FED. AID PROJ. NO.	FISCAL YEAR	SHEET NO.	TOTAL SHEETS
HAWAII	HAW.	I-HI-1(131):17	1977	38	394

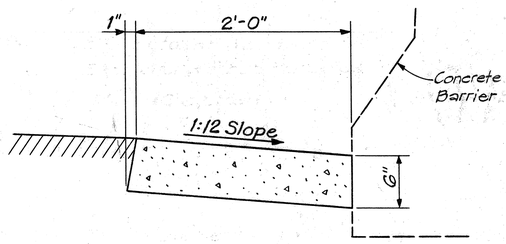

DETAIL- GUTTER, TYPE 2A
Scale: 1½"=1'-0"

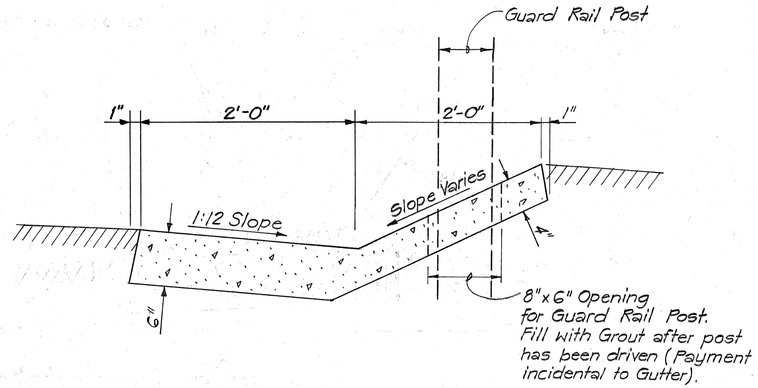

DETAIL-GUTTER, TYPE 2B
Scale: 1½"=1'-0"

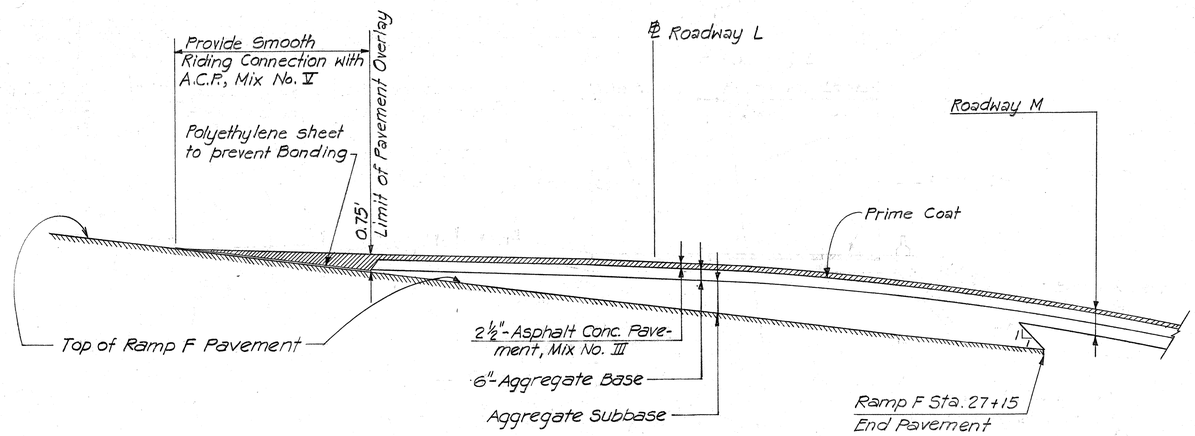

SECTION A 33/38 (Ramp F, Roadway L & M Intersection)
N.T.S.

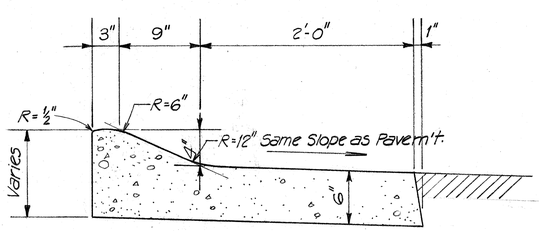

DETAIL-CURB & GUTTER, TYPE 2EGM
Scale: 1½"=1'-0"

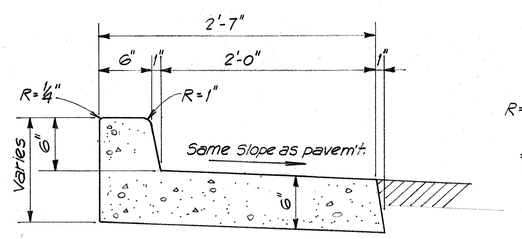

DETAIL - CURB & GUTTER, TYPE 2DGM
Scale: 1½"=1'-0"

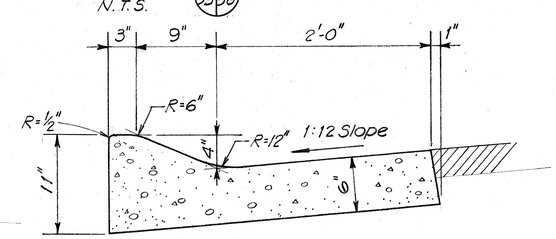

DETAIL-CURB & GUTTER, TYPE 2EG
Scale: 1½"=1'-0"

DATE	REVISION
9/15/78	Revised Section A 33/38

STATE OF HAWAII
DEPARTMENT OF TRANSPORTATION
HIGHWAYS DIVISION

MISCELLANEOUS DETAILS

INTERSTATE ROUTE H-1
PROJECT NO. I-H1-1 (131):17

SCALE: AS SHOWN DATE: AUG. 31, 1977

WERNER BEUGGERT REGISTERED PROFESSIONAL ENGINEER No. 3383-E HAWAII, U.S.A.

THIS WORK WAS PREPARED BY ME OR UNDER MY SUPERVISION.
Werner Beuggert

SURVEY PLOTTED BY
DRAWN BY
TRACED BY
DESIGNED BY
QUANTITIES BY
CHECKED BY
DATE
ORIGINAL PLAN
NOTE BOOK
No.

SHEET No. 1 OF 26 SHEETS

C.O.38

PRINTED ON NO. 1000H CLEARPRINT

FED. ROAD DIST. NO.	STATE	FED. AID PROJ. NO.	FISCAL YEAR	SHEET NO.	TOTAL SHEETS
HAWAII	HAW.	I-HI-I(131):17	1977	39	394

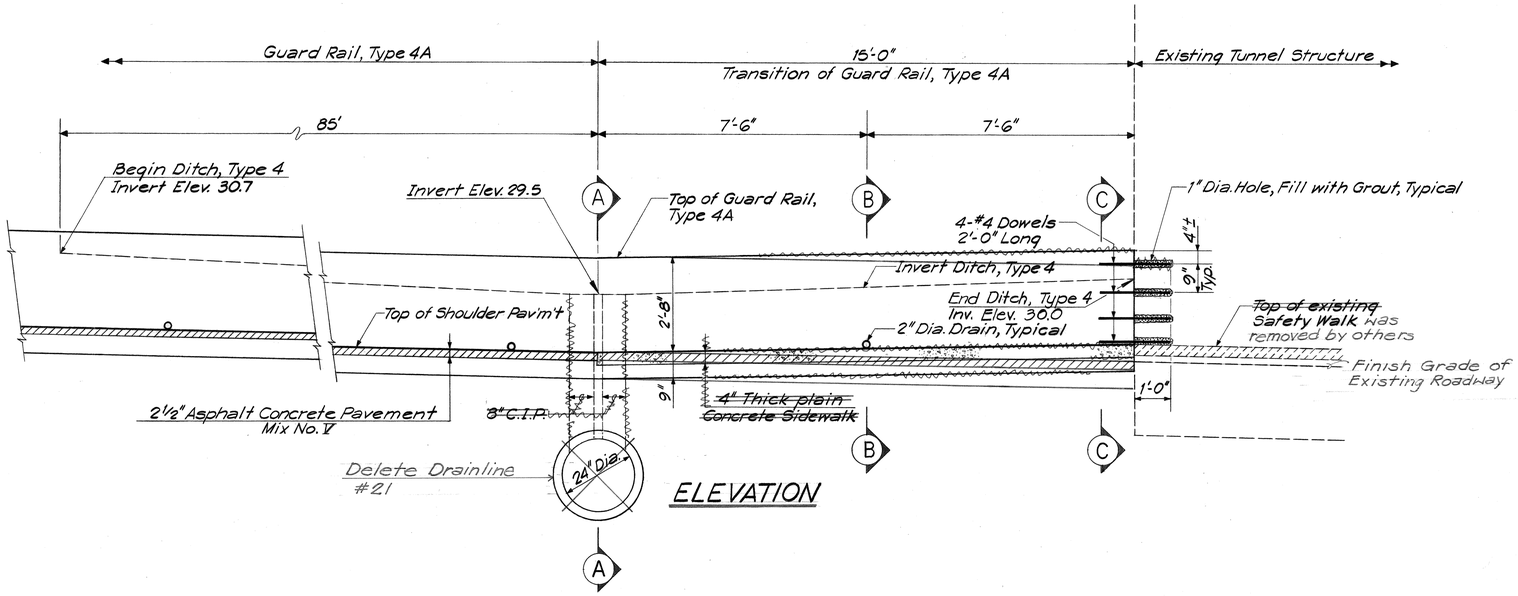

ELEVATION

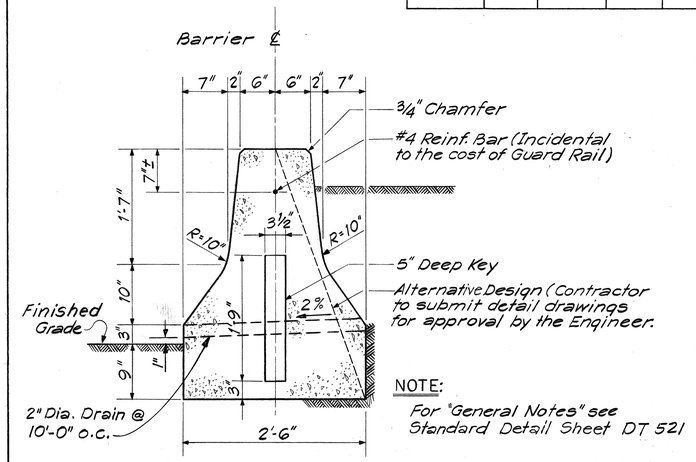

NOTE:
For "General Notes" see Standard Detail Sheet DT 521

GUARD RAIL TYPE 4E

SCALE: 1" = 1'-0"

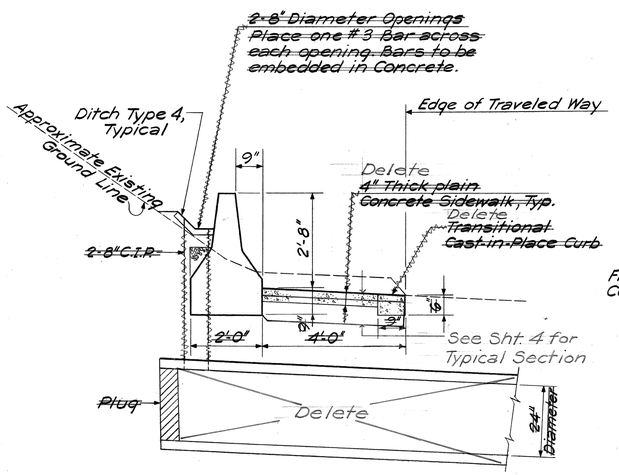

SECTION (A)

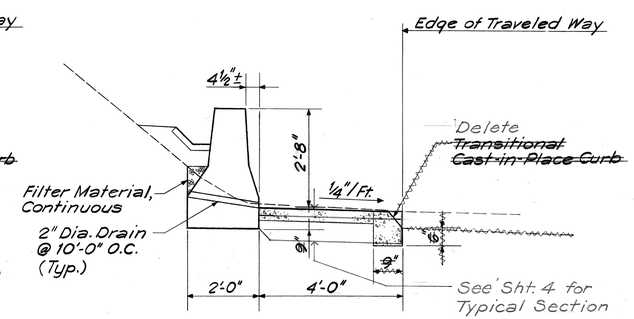

SECTION (B)

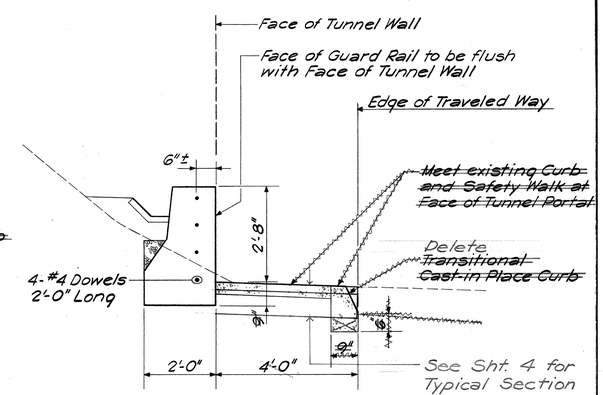

SECTION (C)

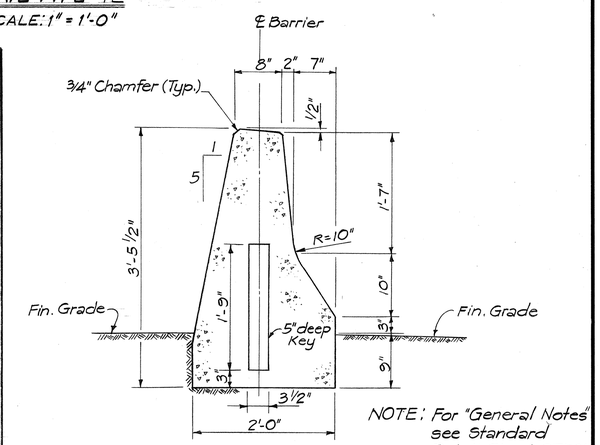

NOTE: For "General Notes" see Standard Detail Sheet DT521

GUARD RAIL TYPE 4F

Scale: 1" = 1'-0"

NOTES:

1. Transition of Guard Rail, Type 4A shall be paid for as "Guard Rail, Type 4A". Furnishing and installation of Dowels shall be considered incidental to "Guard Rail, Type 4A".
2. Payment for Transitional Cast-in-Place Curb shall be made under Curb, Type 2A.

GUARD RAIL TRANSITION TO MEET TUNNEL PORTAL

SCALE: ½" = 1'-0"

ORIGINAL PLAN	SURVEY PLOTTED BY	DATE
	DRAWN BY	"
	TRACED BY	"
NOTE BOOK	DESIGNED BY	"
No.	QUANTITIES BY	"
	CHECKED BY	"

WERNER BEUGGERT REGISTERED PROFESSIONAL ENGINEER No. 3383-E HAWAII, U.S.A.

THIS WORK WAS PREPARED BY ME OR UNDER MY SUPERVISION.

Werner Beuggert

STATE OF HAWAII
DEPARTMENT OF TRANSPORTATION
HIGHWAYS DIVISION

MISCELLANEOUS DETAILS

INTERSTATE ROUTE H-1
PROJECT NO. I-HI-I(131) : 17

SCALE: AS SHOWN DATE: AUG. 31, 1977

SHEET No. 2 OF 26 SHEETS

FED. ROAD DIST. NO.	STATE	FED. AID PROJ. NO.	FISCAL YEAR	SHEET NO.	TOTAL SHEETS
HAWAII	HAW.	I-HI-1(131):17	1977	40	394

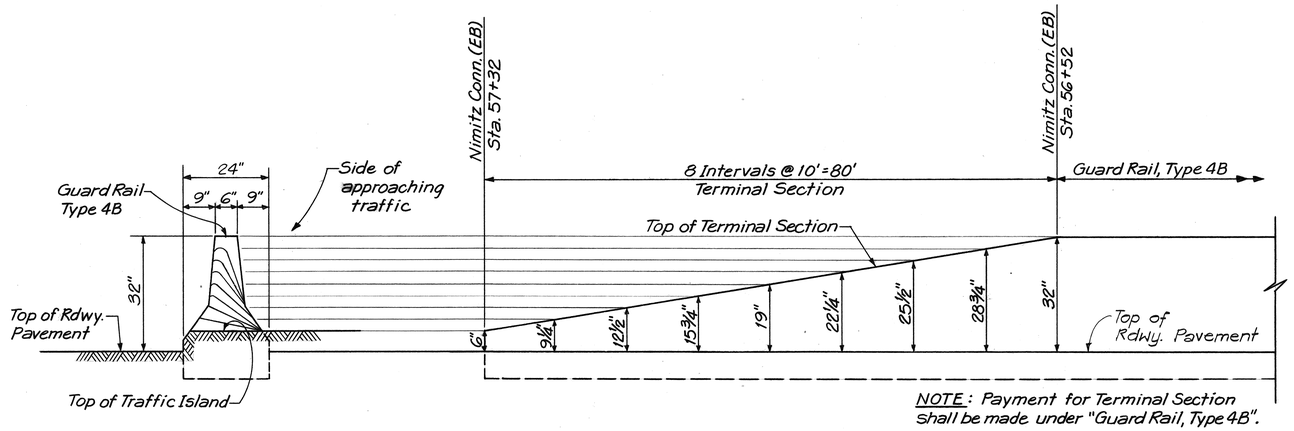

GUARD RAIL, TYPE 4B - TERMINAL SECTION
NOT TO SCALE

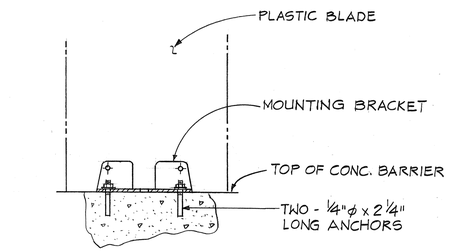

ELEVATION

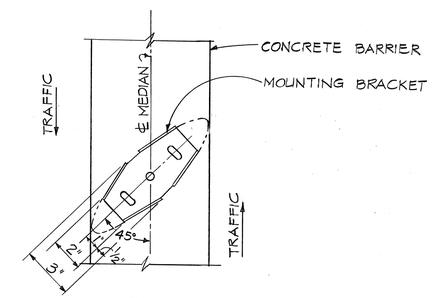

PLAN

MOUNTING DETAIL OF PLASTIC BLADE HEADLIGHT GLARE SCREEN ON CONCRETE BARRIER
N.T.S.

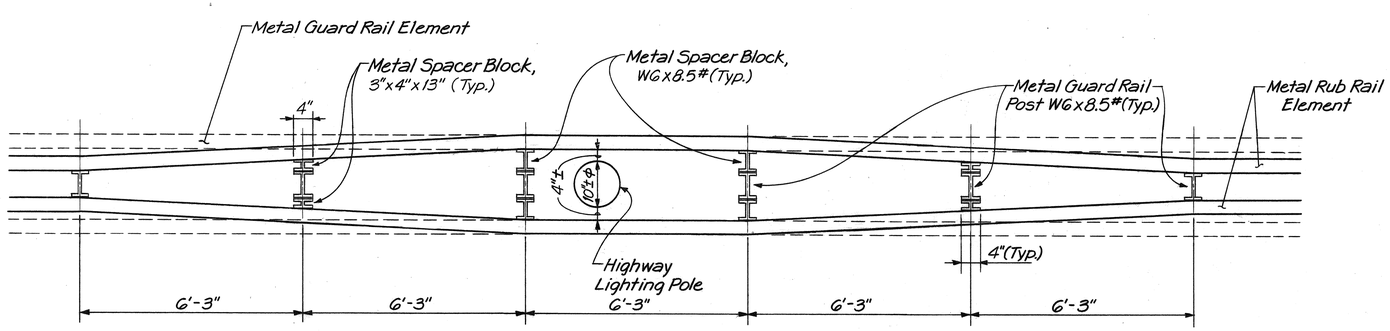

GUARD RAIL, TYPE 3-DOUBLE WITH RUBRAIL.
RUBRAIL TRANSITION AT HIGHWAY LIGHTING POLES
NOT TO SCALE

DATE	REVISION
3/23/78	Replaced mounting detail for headlight glare screen

STATE OF HAWAII
DEPARTMENT OF TRANSPORTATION
HIGHWAYS DIVISION

MISCELLANEOUS DETAILS

INTERSTATE ROUTE H-1
PROJECT NO. I-HI-1(131):17

SCALE: AS SHOWN DATE: AUG. 31, 1977

SHEET No. 3 OF 26 SHEETS

WERNER BUGGERT
REGISTERED PROFESSIONAL ENGINEER
No. 3383-E
HAWAII, U.S.A.

THIS WORK WAS PREPARED BY ME OR UNDER MY SUPERVISION.
Werner Buggert

ORIGINAL PLANS	SURVEY PLOTTED BY	DATE
	DRAWN BY	
	TRACED BY	
NOTE BOOK	DESIGNED BY	
	QUANTITIES BY	
No.	CHECKED BY	

ADD.40

FED. ROAD DIST. NO.	STATE	FED. AID PROJ. NO.	FISCAL YEAR	SHEET NO.	TOTAL SHEETS
HAWAII	HAW.	I-HI-1(131):17	1977	41	394

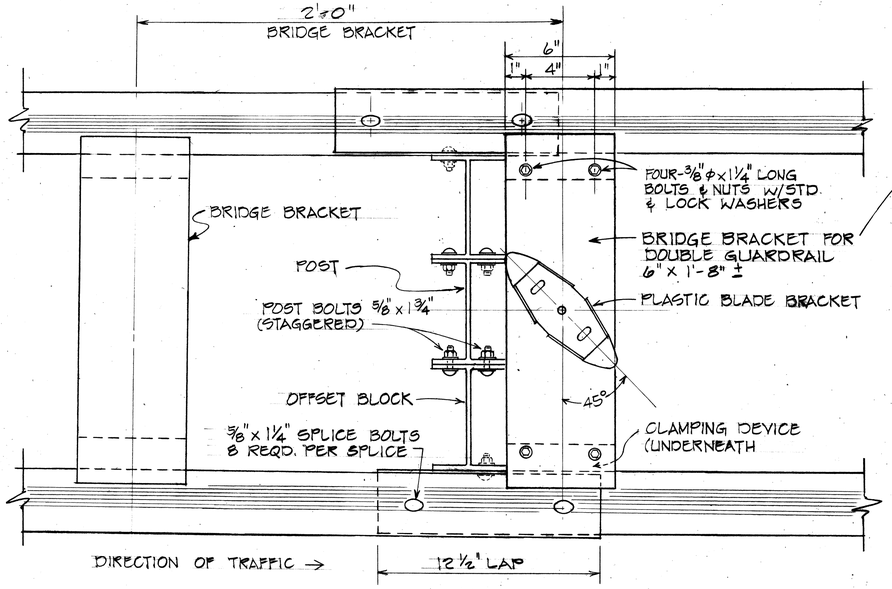

PLAN

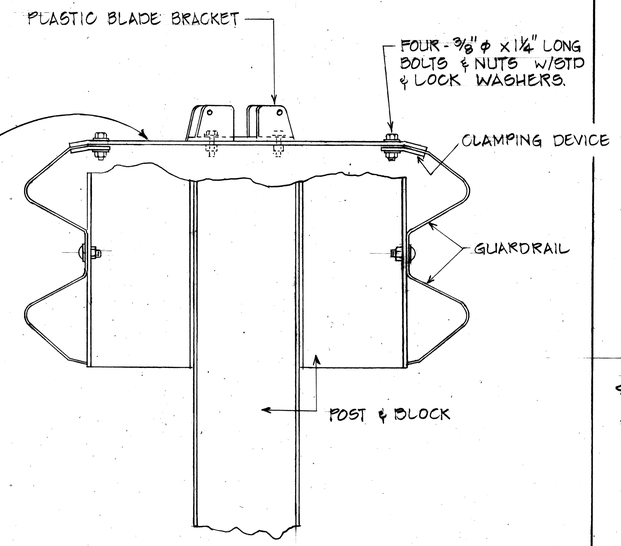

SIDE VIEW

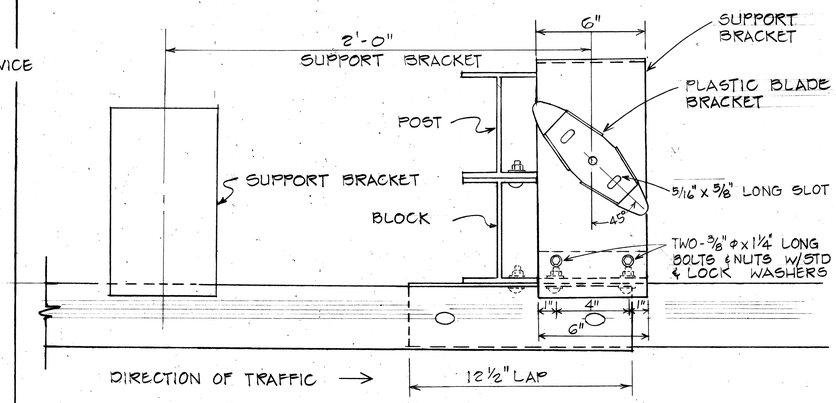

PLAN
Scale: 3" = 1'-0"

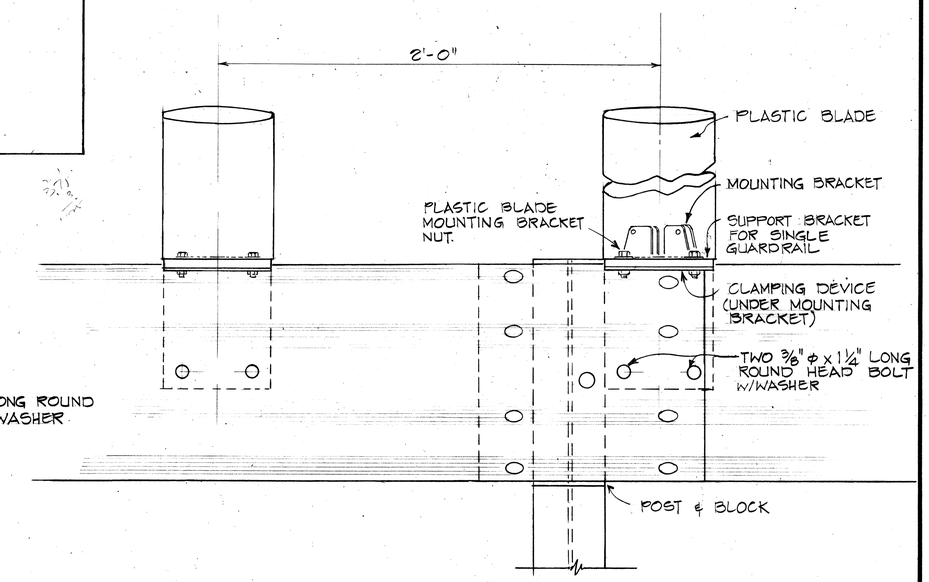

ELEVATION

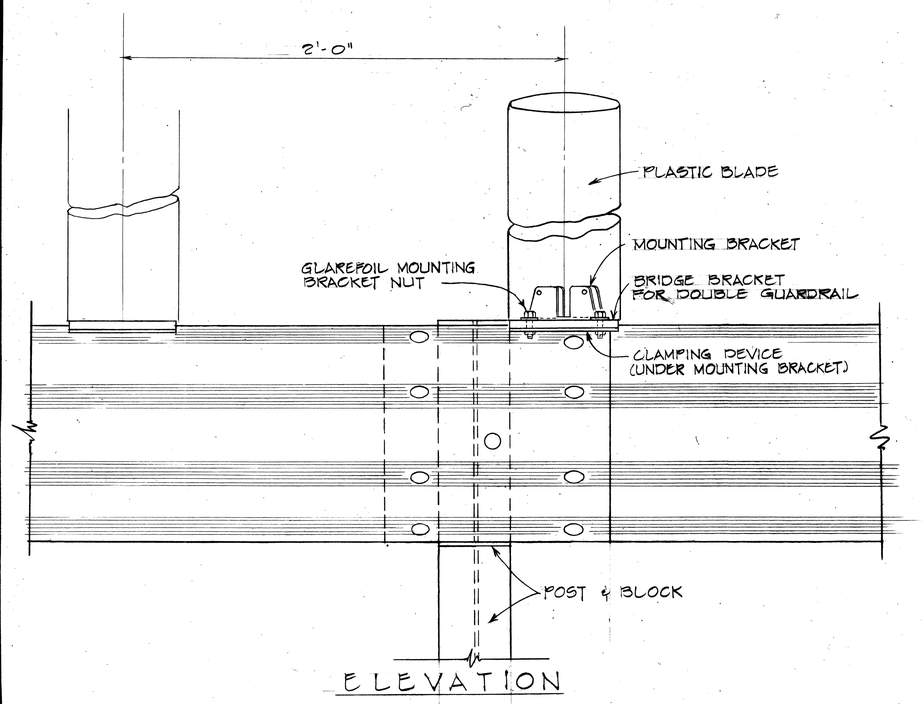

ELEVATION

DOUBLE RAIL PLASTIC BLADE MOUNTING

Scale: 3" = 1'-0"

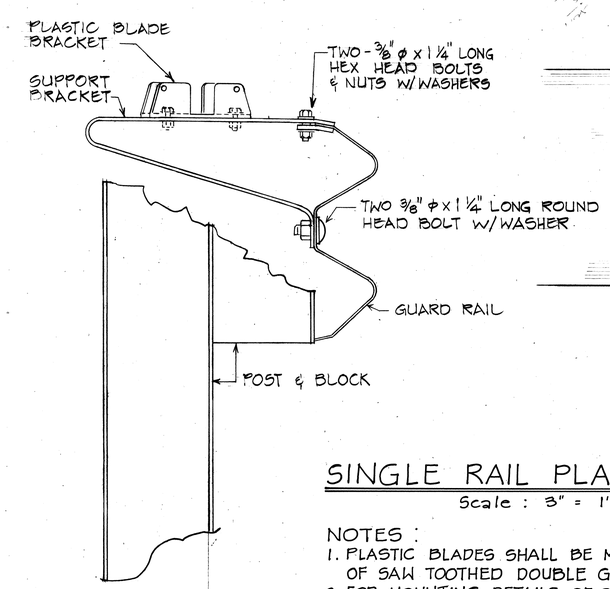

SIDE VIEW

SINGLE RAIL PLASTIC BLADE MOUNTING

Scale : 3" = 1'-0"

NOTES :

1. PLASTIC BLADES SHALL BE MOUNTED ON UPPER RAIL OF SAW TOOTHED DOUBLE GUARD RAILS.
2. FOR MOUNTING DETAILS OF GLARE SCREEN ON CONCRETE BARRIER SEE SHEET ADD. 40.

WERNER BEUGGERT REGISTERED PROFESSIONAL ENGINEER No. 3383-E HAWAII, U.S.A.

THIS WORK WAS PREPARED BY ME OR UNDER MY SUPERVISION.

Werner Beuggert

DATE	REVISION
3/23/78	DELETED ALL DETAILS RELATING TO STEEL MESH PANELS. ADDED DETAILS FOR PLASTIC BLADE GLARE SCREEN.

STATE OF HAWAII
DEPARTMENT OF TRANSPORTATION
LAND TRANSPORTATION FACILITIES DIVISION

DETAILS OF PLASTIC BLADE HEADLIGHT GLARE SCREEN

(FOR GUARDRAIL, TYPE 3)

KEEHI INTERCHANGE
F.A.I. PROJ. NO. I-HI-1 (131):17

Scale: As Shown Date: 1978

SHEET No. 4 OF 26 SHEETS

ORIGINAL PLAN	SURVEY PLOTTED BY	DATE
	DRAWN BY	"
	TRACED BY	"
NOTE BOOK	DESIGNED BY	"
	QUANTITIES BY	"
No.	CHECKED BY	"

FED. ROAD DIST. NO.	STATE	FED. AID PROJ. NO.	FISCAL YEAR	SHEET NO.	TOTAL SHEETS
HAWAII	HAW.	I-H1-1(131)17	1977	42	394

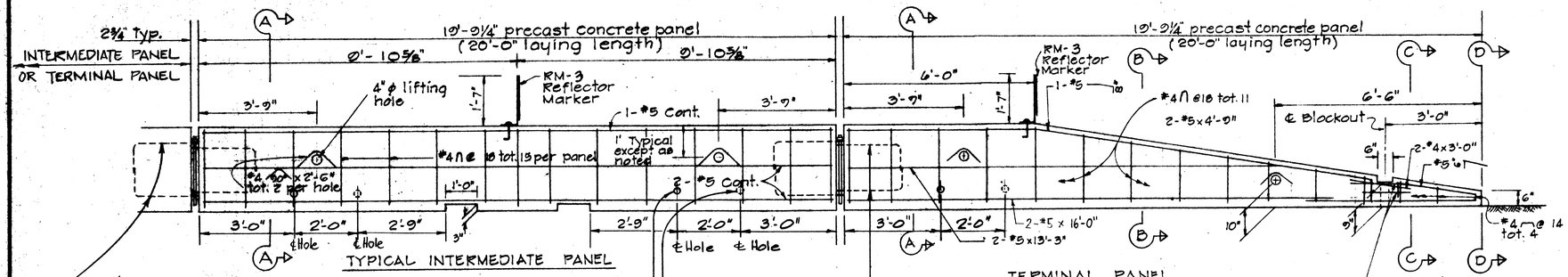

TYPICAL INTERMEDIATE PANEL

ELEVATION
Scale: ½" = 1'-0"

TERMINAL PANEL

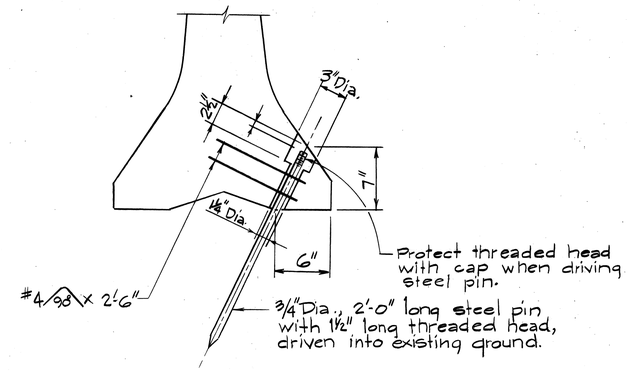

DETAIL A - GROUND ANCHORAGE
Scale: 1½" = 1'-0"

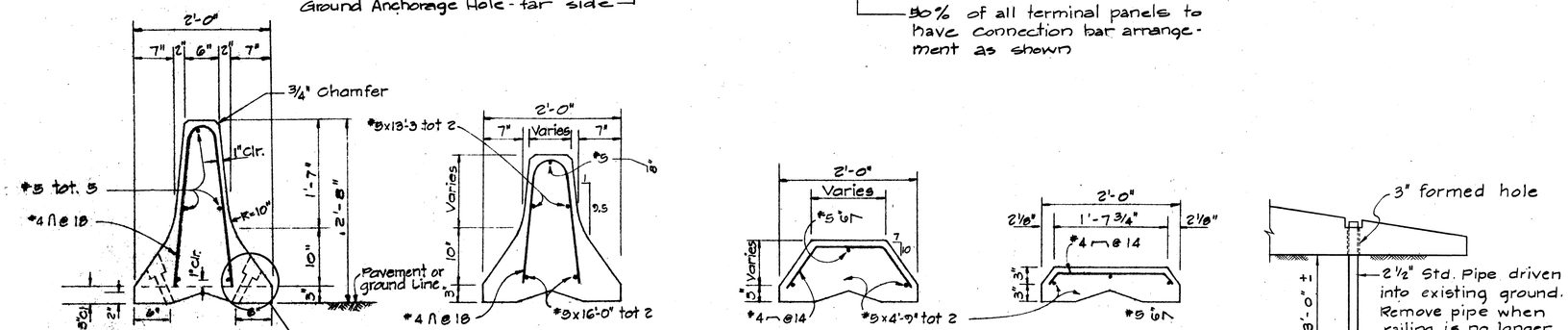

SECTION "A-A"
SECTION "B-B"
SECTION "C-C"
SECTION "D-D"

SECTIONS
Scale: 1" = 1'-0"

GROUND ANCHORAGE FOR RAMPED END OF TERMINAL PANEL
Scale: ½" = 1'-0"

NOTES

1. For details not shown in Sections B-B, C-C, & D-D, see Section A-A
2. Reflector Marker shall not be paid for separately but shall be considered incidental to "Portable Concrete Guard Rail."
3. Concrete shall be Class "A".
4. All bolts to have cut washers unless otherwise noted.
5. Construct asphalt concrete or mortar base where needed for proper setting of guard rail on existing pavement and use aggregate base material on unpaved areas. Construction of base shall not be paid separately but shall be considered incidental to "Portable Concrete Guard Rail." The base shall not be constructed under 1'-0" x 3" openings and connection openings.

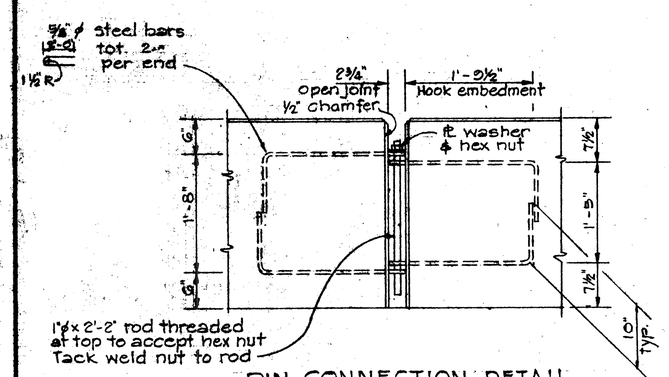

PIN CONNECTION DETAIL
Scale: 1" = 1'-0"

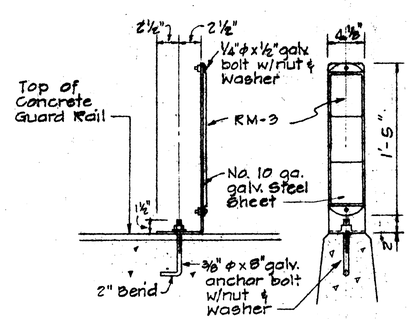

SIDE FRONT

REFLECTOR MARKER MOUNTING DETAIL
Scale: 1½" = 1'-0"

ORIGINAL PLAN | SURVEY PLOTTED BY | DRAWN BY | TRACED BY | DESIGNED BY | QUANTITIES BY | CHECKED BY | NOTE BOOK | DATE | NO.

HNE

ERNEST BEUGGERT REGISTERED PROFESSIONAL ENGINEER No. 3383-E HAWAII, U.S.A.

THIS WORK WAS PREPARED BY ME OR UNDER MY SUPERVISION.

STATE OF HAWAII
DEPARTMENT OF TRANSPORTATION
HIGHWAYS DIVISION

PORTABLE CONCRETE GUARD RAIL TYPICAL DETAILS

INTERSTATE ROUTE H-1
PROJECT NO. I-H1-1(131):17
Scale: As Noted Date: Aug. 31, 1977

SHEET No. 5 OF 26 SHEETS

FED. ROAD DIST. NO.	STATE	FED. AID PROJ. NO.	FISCAL YEAR	SHEET NO.	TOTAL SHEETS
HAWAII	HAW.	I-HI-1(131):17	1977	43	394

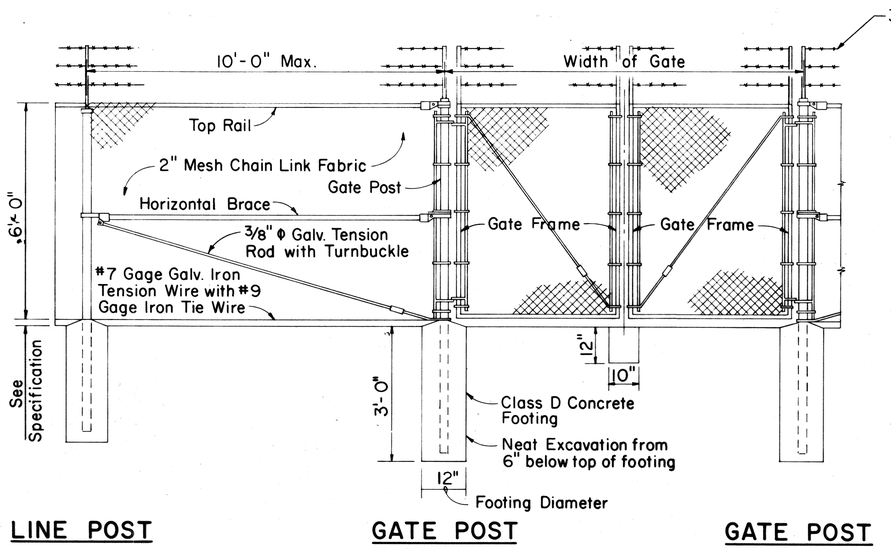

DETAIL OF CHAIN LINK GATE

NOTE: 1. Gate fork latch and lock, flush plate and anchor, and plunger shall be installed with Gates, and shall be considered as incidental to Chain Link Fence Gate.

2. Gate frames shall be mitered and welded at corners.

3. Fence detail not shown shall be in accordance with the Standard Specifications.

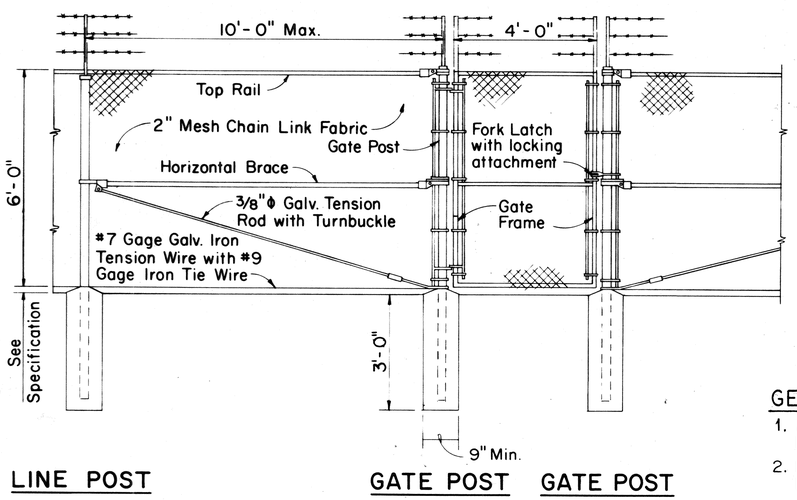

DETAIL OF 4 FT. CHAIN LINK GATE

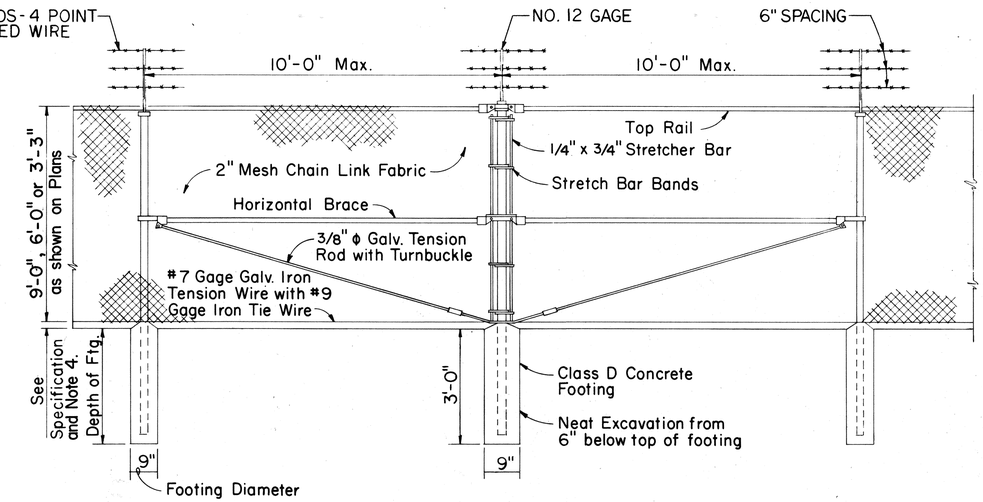

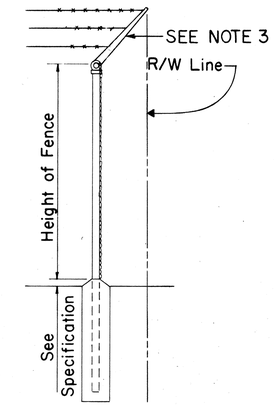

TYPICAL SECTION (WITH CONCRETE FOOTING)

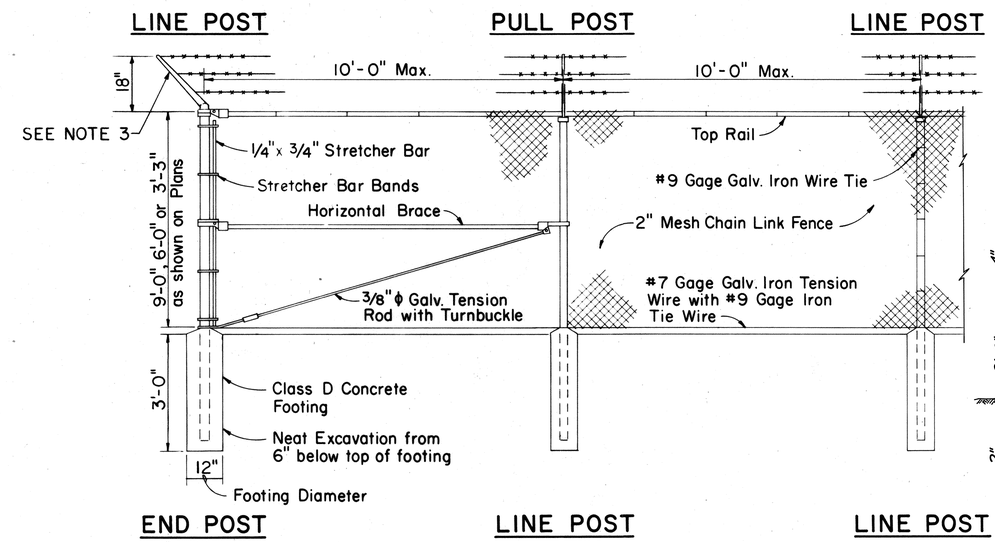

SECURITY CHAIN LINK FENCE DETAILS

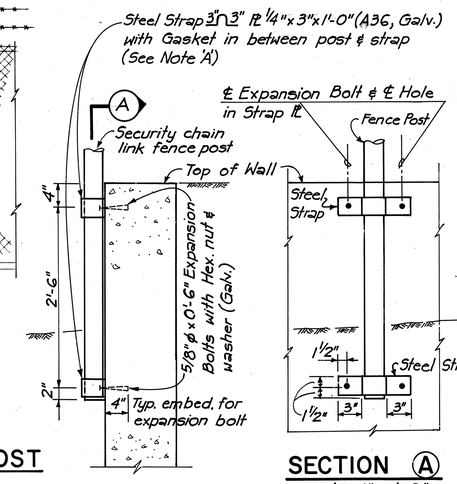

TYPICAL SECTION ON WALL
Scale: 1" = 1'-0"

SECTION (A)
Scale: 1" = 1'-0"

NOTE 'A': Steel Strap shall be tight contact with fence post. The portion of fence post & steel strap embedded in ground shall be coated with bitumen.

GENERAL NOTES:

1. ALL MESH TO BE #9 GAGE WIRE, WOVEN IN A 2" MESH. FENCE TOP AND BOTTOM EDGE TO BE TWISTED AND BARBED.
2. FENCE TO BE PROVIDED WITH 3 STRANDS OF 4 POINT BARBED WIRE SECURELY ATTACHED TO SINGLE EXTENSION ARMS ALONG TOP OF FENCE.
3. SINGLE EXTENSION ARMS SHALL POINT OUTWARD AT AN ANGLE OF 45°. ALL EXTENSION ARMS TO BE 12 GAGE PRESSED STEEL.
4. MATERIALS FOR 9'-0" FENCE SHALL BE THE SAME AS FOR 6'-0", EXCEPT THE FOLLOWING:
   LINE POST : 3" O.D.; 5.79 #/FT.
   END POST : 3 1/2" O.D.; 7.58 #/FT.

WERNER BEUGGERT REGISTERED PROFESSIONAL ENGINEER No. 3383-E HAWAII, U.S.A.

THIS WORK WAS PREPARED BY ME OR UNDER MY SUPERVISION.
Werner Beuggert

STATE OF HAWAII
DEPARTMENT OF TRANSPORTATION
HIGHWAYS DIVISION

SECURITY CHAIN LINK FENCE DETAILS (WITH TOPRAIL)

INTERSTATE ROUTE H-1
PROJECT NO. I-HI-1(131):17

Scale: 1/2" = 1'-0" Date: Aug. 31, 1977

SHEET No. 6 OF 26 SHEETS

ORIGINAL PLAN	SURVEY PLOTTED BY	DATE
	DRAWN BY	"
	TRACED BY	"
	DESIGNED BY	"
NOTE BOOK	QUANTITIES BY	"
No.	CHECKED BY	"

FED. ROAD DIST. NO.	STATE	FED. AID PROJ. NO.	FISCAL YEAR	SHEET NO.	TOTAL SHEETS
HAWAII	HAW.	I-HI-1(131)17	1977	44	394

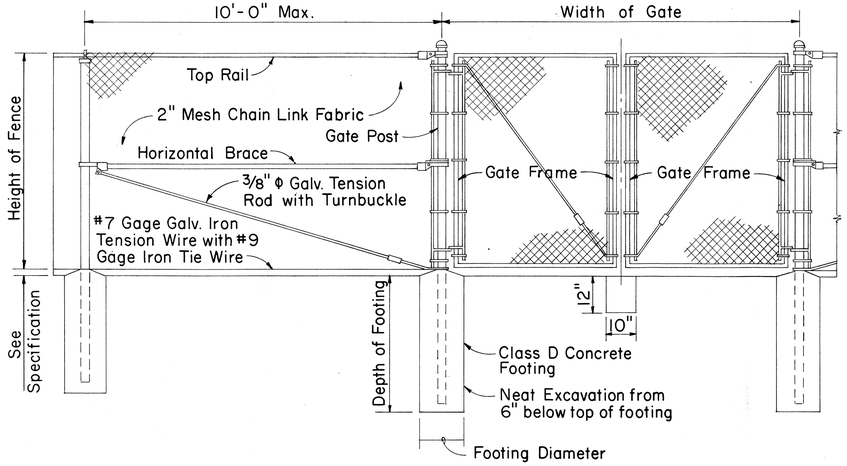

DETAIL OF CHAIN LINK GATE

NOTE: 1. Gate fork latch and lock, flush plate and anchor, and plunger shall be installed with Gates, and shall be considered as incidental to Chain Link Fence Gate.

2. Gate frames shall be mitered and welded at corners.

3. Fence detail not shown shall be in accordance with the Standard Specifications.

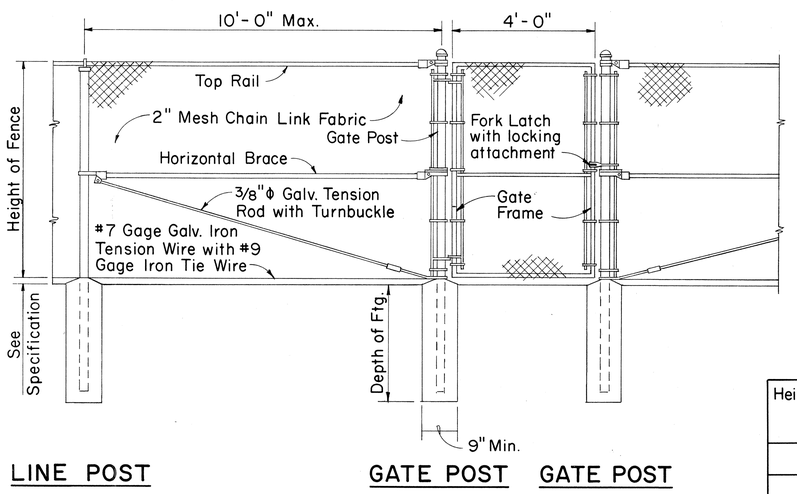

DETAIL OF 4 FT. CHAIN LINK GATE

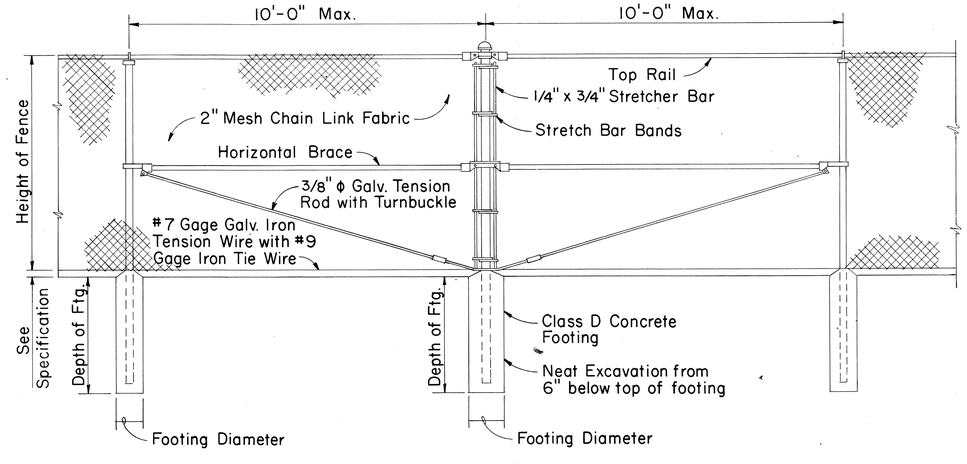

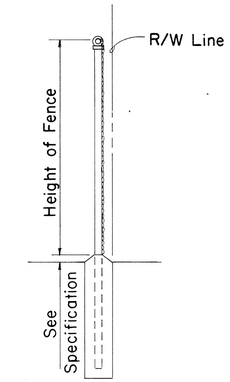

TYPICAL SECTION (WITH CONCRETE FOOTING)

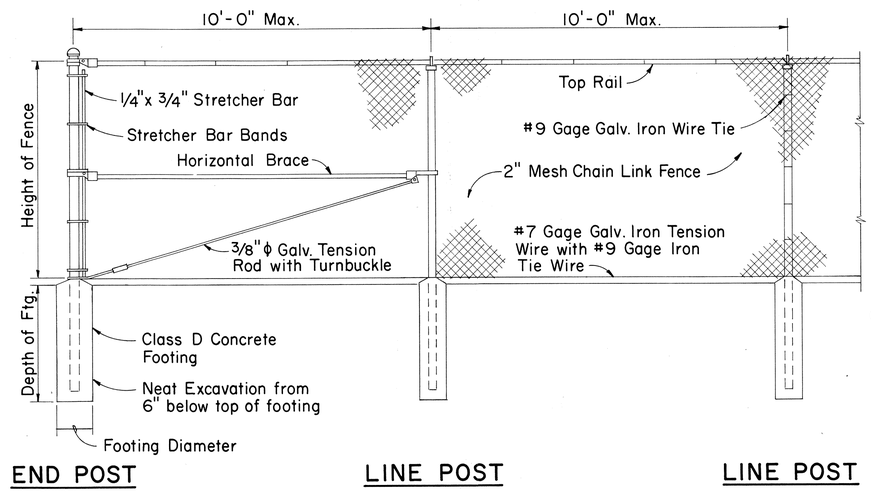

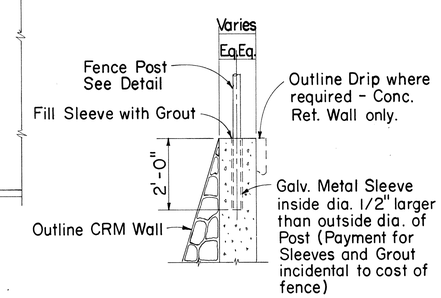

TYPICAL SECTION (ON CRM & CONC. RET. WALL)

CHAIN LINK FENCE DETAILS

Height of Fence	Minimum Depth of Footing		Minimum Footing Diameter	
	Line Post	Corner, Pull, End and Gate Posts	Line Post	Corner, Pull and End Posts
3'	2'-0"	2'-6"	8"	8"
4'	2'-6"	2'-6"	8"	8"
5'	3'-0"	3'-0"	8"	8"
6'	3'-0"	3'-0"	8"	9"

APPROVAL RECOMMENDED:

HIGHWAY DESIGN ENGINEER — DATE 12-4-69

APPROVED:

ASSISTANT CHIEF, ENGINEERING — DATE 12-10-69

NO.	REVISION	APPROVED BY	DATE

STATE OF HAWAII
DEPARTMENT OF TRANSPORTATION
LAND TRANSPORTATION FACILITIES DIVISION

STANDARD DETAILS

CHAIN LINK FENCE (WITH TOPRAIL)

Scale: 1/2" = 1'-0" Date:

SHEET No. 7 OF 26 SHEETS | DD 607.1

ORIGINAL PLAN — SURVEY PLOTTED BY ..... DATE; DRAWN BY ..... ; TRACED BY ..... ; NOTE BOOK No. ..... ; DESIGNED BY ..... ; QUANTITIES BY ..... ; CHECKED BY .....

FED. ROAD DIST. NO.	STATE	FED. AID PROJ. NO.	FISCAL YEAR	SHEET NO.	TOTAL SHEETS
HAWAII	HAW.	I-H1-1(13).17	1977	45	394

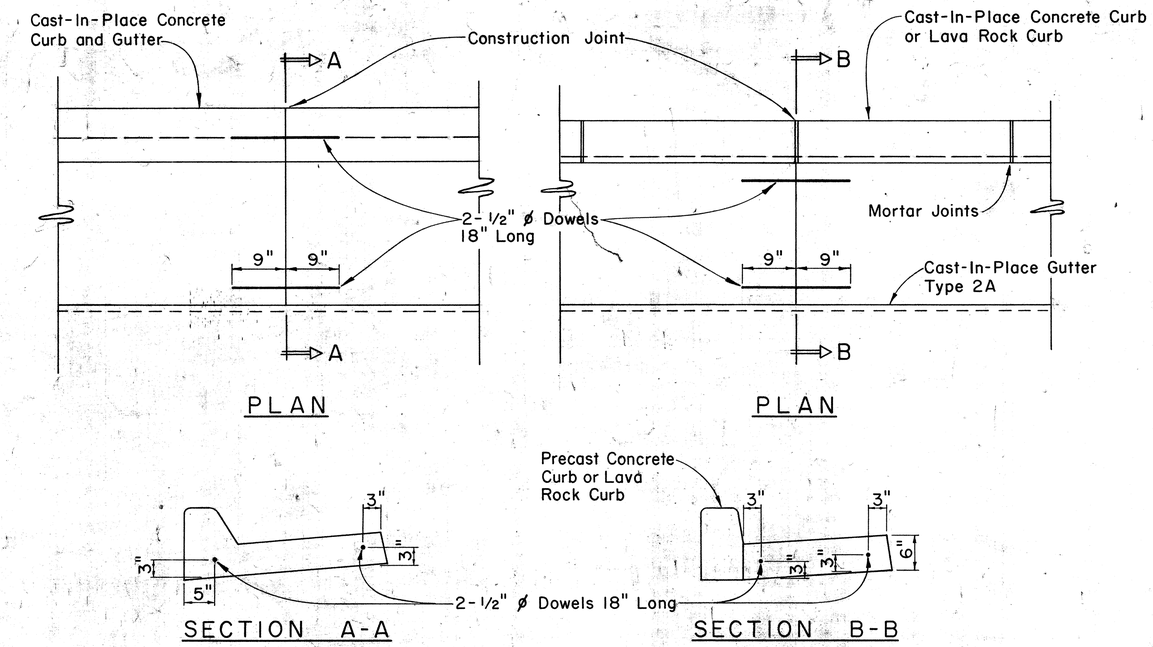

CAST-IN-PLACE CURB & GUTTER

CAST-IN-PLACE GUTTER

CONSTRUCTION JOINT DETAIL

Scale: 1" = 1'-0"

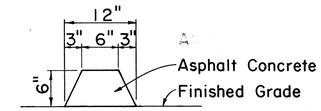

CURB, TYPE 6

BITUMINOUS CURB

Scale: 1 1/2" = 1'-0"

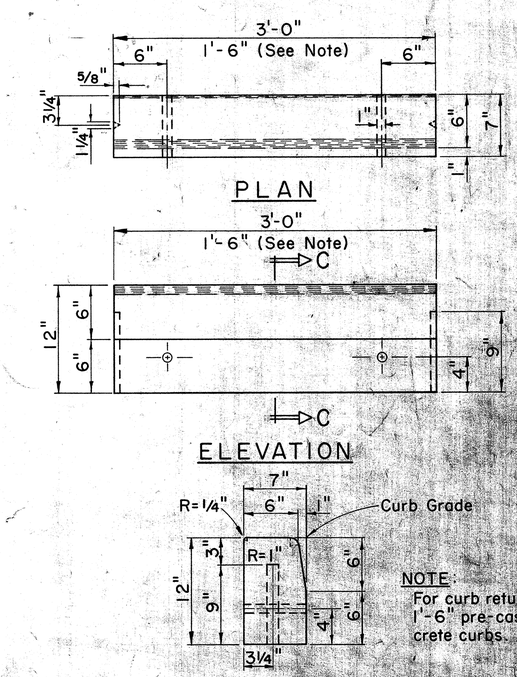

NOTE:
For curb returns use 1'-6" pre-cast concrete curbs.

SECTION C-C

CURB, TYPE 3D

PRE-CAST CONC. CURB

Scale: 1 1/2" = 1'-0"

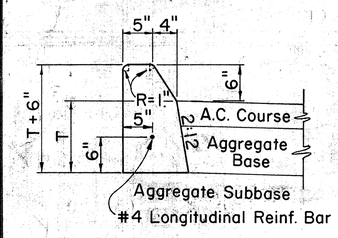

CURB, TYPE 2A

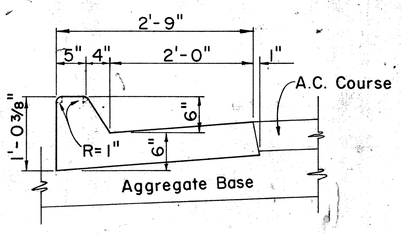

CURB & GUTTER, TYPE 2AG

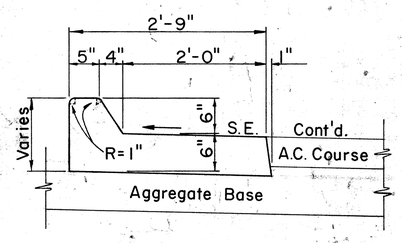

CURB & GUTTER, TYPE 2AGM

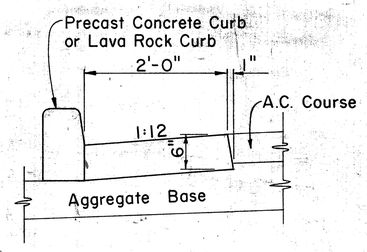

GUTTER, TYPE 2A

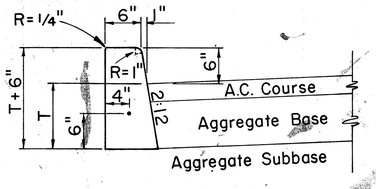

CURB, TYPE 2D

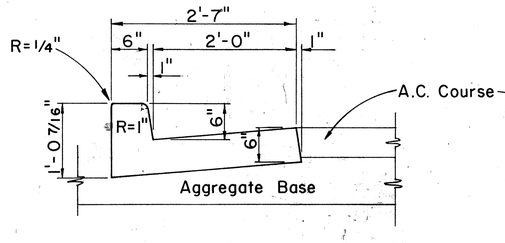

CURB & GUTTER, TYPE 2DG

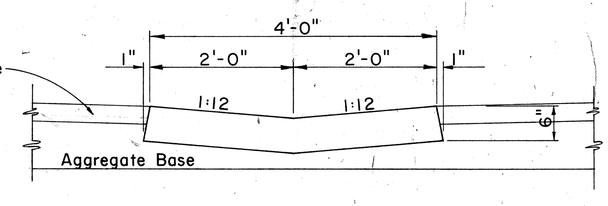

GUTTER, TYPE 2G

CAST-IN-PLACE CONCRETE CURBS AND/OR GUTTERS

Scale: 1" = 1'-0"

APPROVAL RECOMMENDED:
M. Fujizawa 12-4-69
HIGHWAY DESIGN ENGINEER DATE

APPROVED:
Walter G. Schaefer 12-10-69
ASSISTANT CHIEF, ENGINEERING DATE

NO.	REVISION	APPROVED BY	DATE

STATE OF HAWAII
DEPARTMENT OF TRANSPORTATION
LAND TRANSPORTATION FACILITIES DIVISION

STANDARD DETAILS

TYPICAL DETAILS OF CURB AND/OR GUTTERS

Scale: As Shown

SHEET No. 8 OF 26 SHEETS | DD 609.1

ORIGINAL PLAT	SURVEY PLOTTED BY	DATE
	DRAWN BY	"
	TRACED BY	"
NOTE BOOK	DESIGNED BY	"
	QUANTITIES BY	"
No.	CHECKED BY	"

FED. ROAD DIST. NO.	STATE	FED. AID PROJ. NO.	FISCAL YEAR	SHEET NO.	TOTAL SHEETS
HAWAII	HAW.	I-HI-1(131):17	1977	46	394

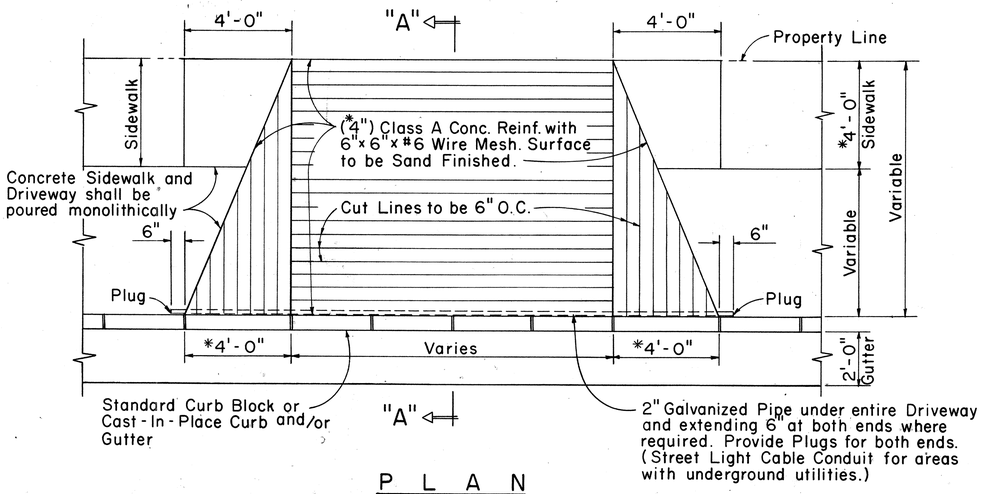

P L A N
Scale: 3/8"=1'-0"

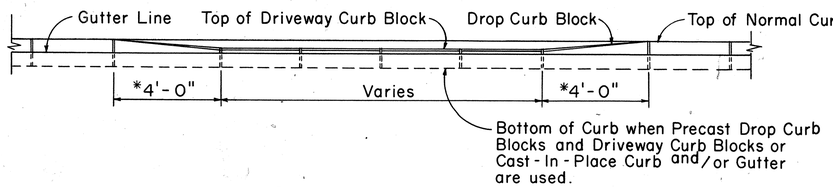

E L E V A T I O N
Scale: 3/8"=1'-0"

Dist. Curb Line to ℄	Slope
12'	5/8" to 12"
10'	3/4" to 12"
8'	1" to 12"
7'	7/8" to 12"
6'	1" to 12"
3'	1 3/4" to 12"

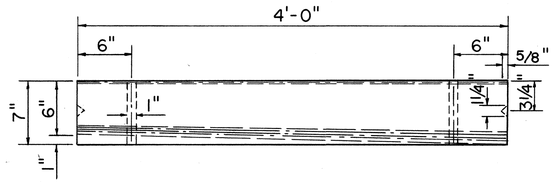

P L A N
Scale: 1 1/2"=1'-0"

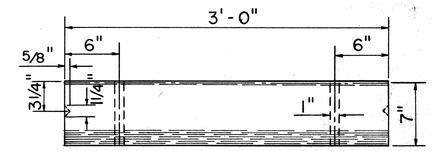

P L A N
Scale: 1 1/2"=1'-0"

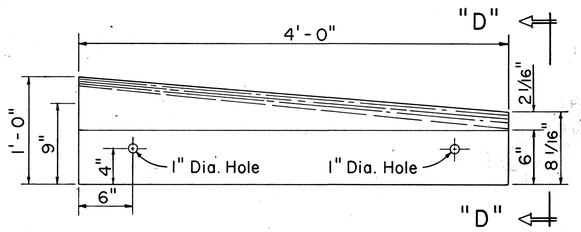

E L E V A T I O N
Scale: 1 1/2"=1'-0"

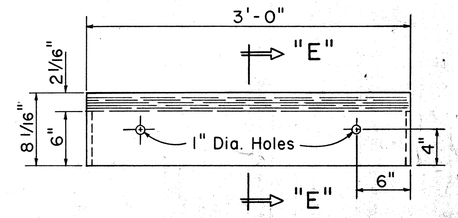

E L E V A T I O N
Scale: 1 1/2"=1'-0"

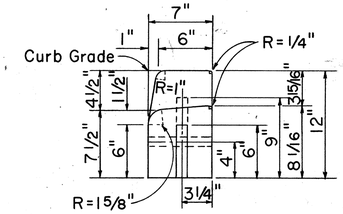

S E C T I O N "D-D"
Scale: 1 1/2"=1'-0"

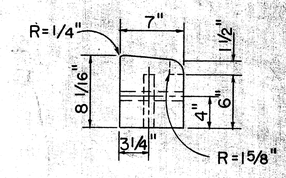

S E C T I O N "E-E"
Scale: 1 1/2"=1'-0"

PRE-CAST CONC. DROP CURB BLOCK

PRE-CAST CONC. DRIVEWAY CURB

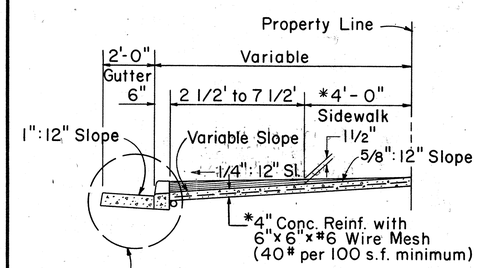

S E C T I O N "A-A"
Scale: 3/8"=1'-0"

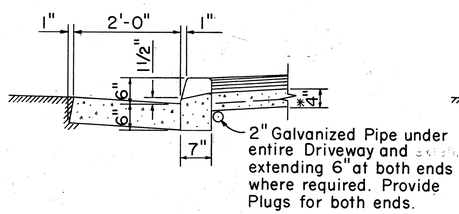

PRE-CAST DRIVEWAY CURB AND CAST-IN-PLACE GUTTER

D E T A I L "B"
Scale: 3/4"=1'-0"

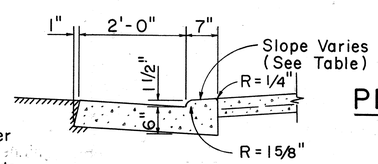

CAST-IN-PLACE INTEGRAL DRIVEWAY CURB AND GUTTER

D E T A I L "C"
Scale: 3/4"=1'-0"

NOTE:

1. * Use dimension shown unless otherwise noted on the plans.

TYPICAL DETAILS OF REINF. CONC. DROP DRIVEWAY

Scale: As Noted

APPROVAL RECOMMENDED:
HIGHWAY DESIGN ENGINEER — DATE 12-4-69

APPROVED:
ASSISTANT CHIEF, ENGINEERING — DATE 12-10-69

NO.	REVISION	APPROVED BY	DATE

STATE OF HAWAII
DEPARTMENT OF TRANSPORTATION
LAND TRANSPORTATION FACILITIES DIVISION
STANDARD DETAILS
TYPICAL DETAILS OF
REINF. CONC. DROP DRIVEWAY
Scale: As Shown

SHEET No. 9 OF 26 SHEETS | DD 610.1

ORIGINAL PLAN | NOTE BOOK No. | SURVEY PLOTTED BY | DRAWN BY | TRACED BY | DESIGNED BY | QUANTITIES BY | CHECKED BY | DATE

FED. ROAD DIST. NO.	STATE	FED. AID PROJ. NO.	FISCAL YEAR	SHEET NO.	TOTAL SHEETS
HAWAII	HAWAII	I-H1-1(131).17	1977	47	394

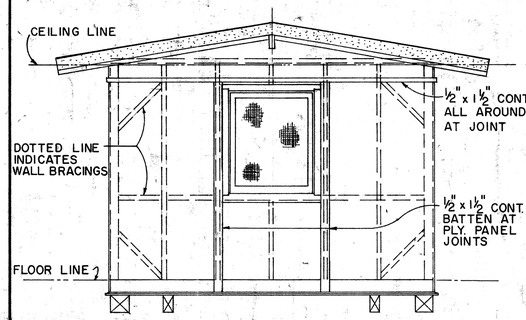

ELEVATION Ⓑ
ELEVATION Ⓓ SIMILAR
SCALE: 3/8" = 1'-0"

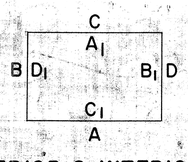

EXTERIOR & INTERIOR KEY

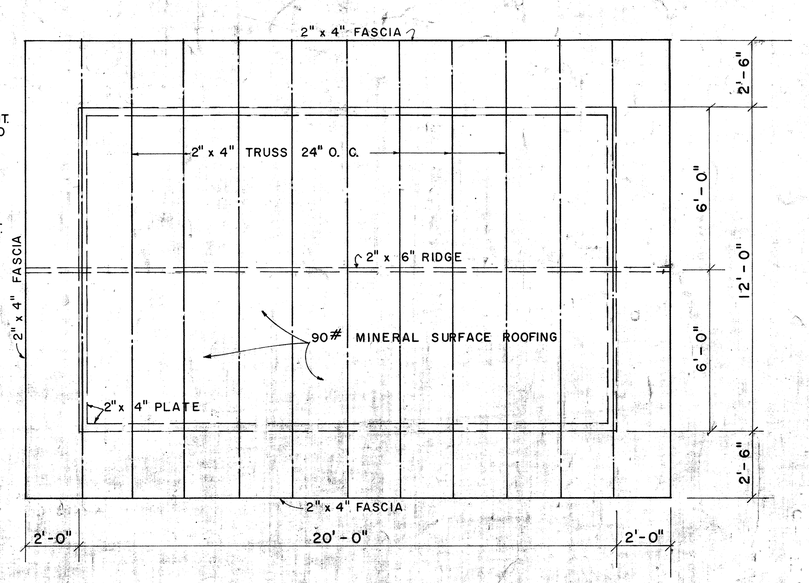

ROOF FRAMING PLAN
SCALE: 3/8" = 1'-0"

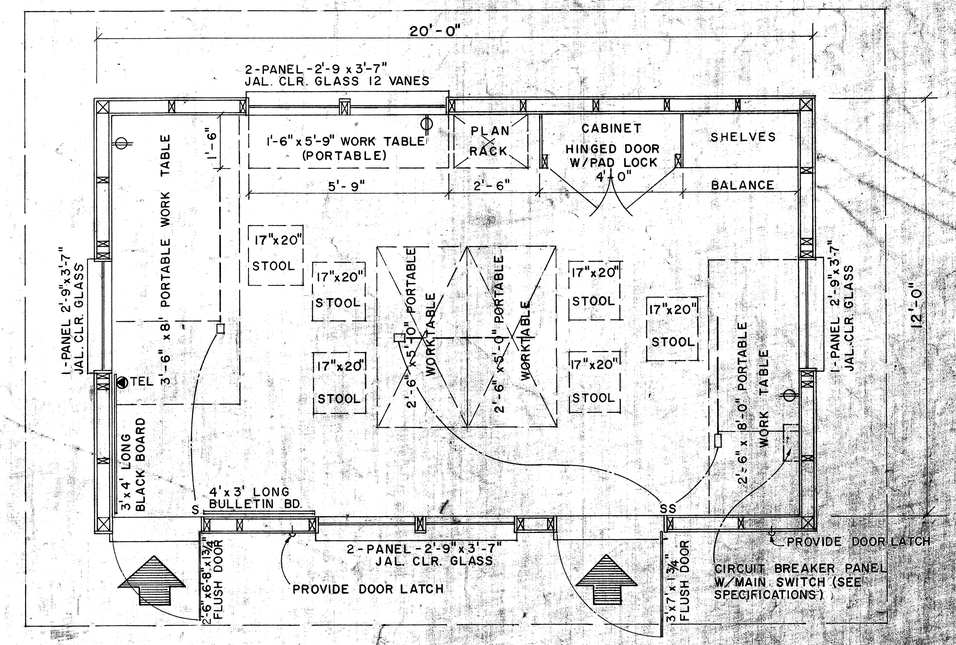

FLOOR PLAN
SCALE: ½" = 1'-0"

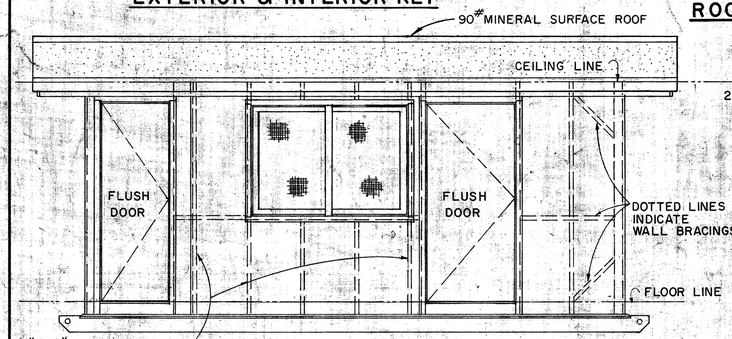

ELEVATION Ⓐ
SCALE: 3/8" = 1'-0"

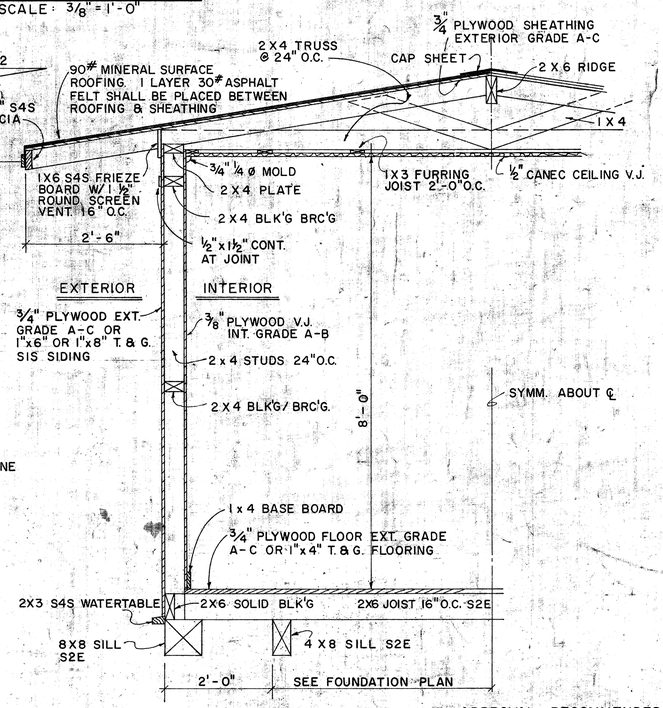

TYPICAL WALL SECTION
SCALE: ¾" = 1'-0"

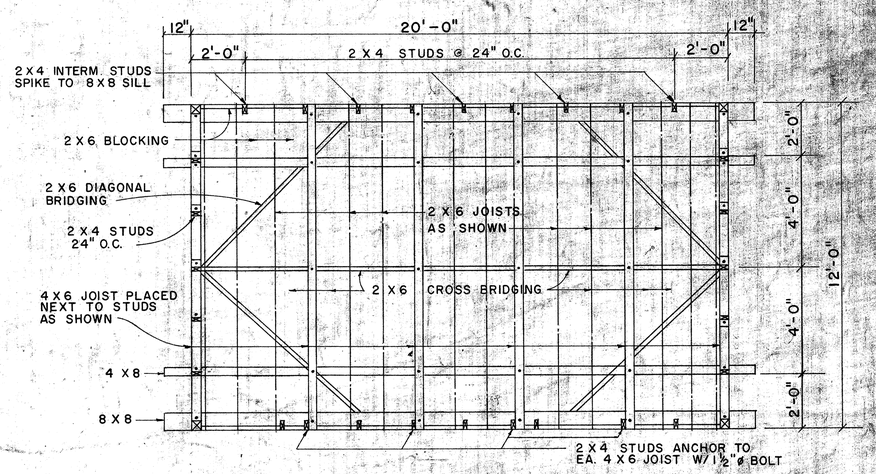

FOUNDATION FRAMING PLAN
SCALE: 3/8" = 1'-0"

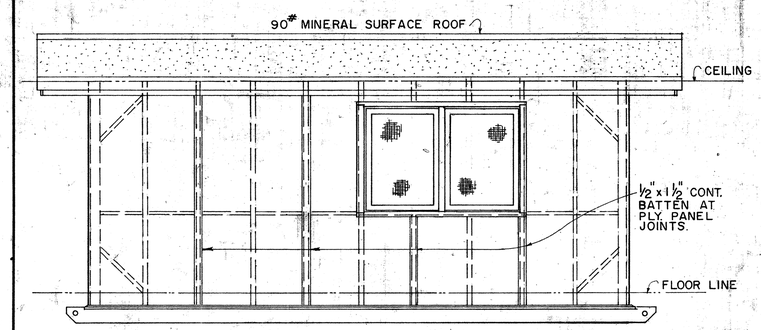

ELEVATION Ⓒ
SCALE: 3/8" = 1'-0"

ORIGINAL PLAN	SURVEY PLOTTED BY	DATE
	DRAWN BY	
	TRACED BY	
	DESIGNED BY	
NOTE BOOK	QUANTITIES BY	
No.	CHECKED BY	

APPROVAL RECOMMENDED:
M. Hirozawa — HIGHWAY DESIGN ENGINEER — 12-4-69 DATE

APPROVED:
Arthur Q. Davis — ASSISTANT CHIEF, ENGINEERING — 12-10-69 DATE

NO.	REVISION	APPROVED BY	DATE

STATE OF HAWAII
DEPARTMENT OF TRANSPORTATION
LAND TRANSPORTATION FACILITIES DIVISION
FIELD OFFICE

Scale: As Noted

SHEET No. 10 OF 26 SHEETS DD 6361

FED. ROAD DIST. NO.	STATE	FED. AID PROJ. NO.	FISCAL YEAR	SHEET NO.	TOTAL SHEETS
HAWAII	HAWAII	I-HI-1(131):17	1977	48	394

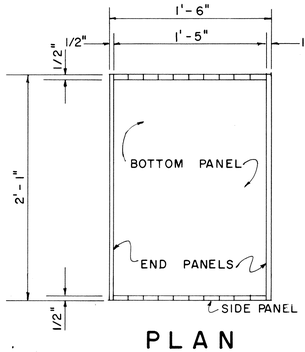

PLAN

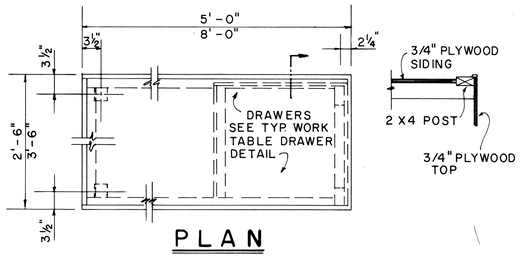

PLAN

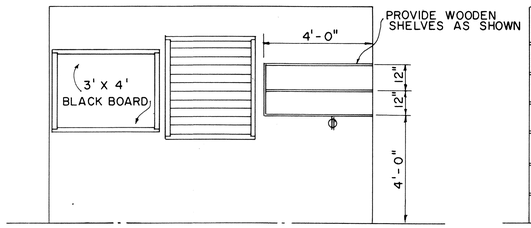

ELEVATION (D1)

SCALE: 3/8" = 1'-0"

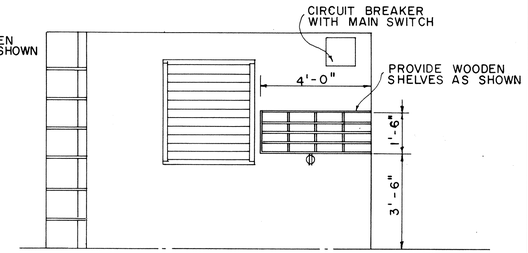

ELEVATION (B1)

SCALE: 3/8" = 1'-0"

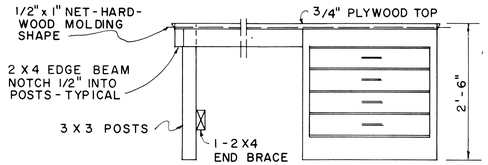

ELEVATION

2'-6" x 5'-0" 2 REQ'D.
3'-6" x 8'-0" 1 REQ'D
2'-6" x 8'-0" 1 REQ'D

PORTABLE WORK TABLE DETAIL

SCALE: 3/4" = 1'-0"

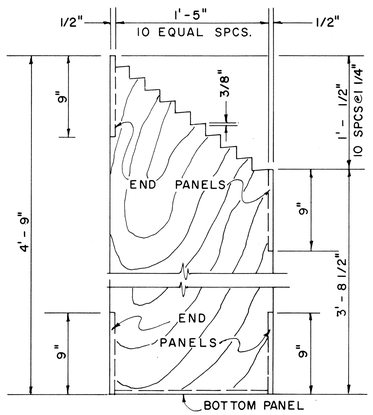

END ELEVATION

PLAN RACK DETAIL

SCALE: 1 1/2" = 1'-0"

(ONE REQUIRED)

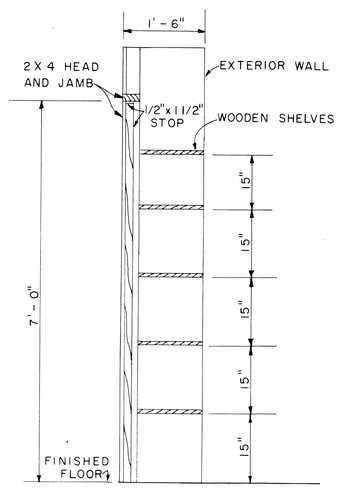

SECTION (G)

SCALE: 3/4" = 1'-0"

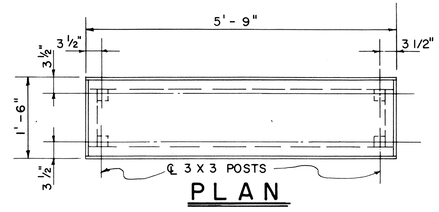

PLAN

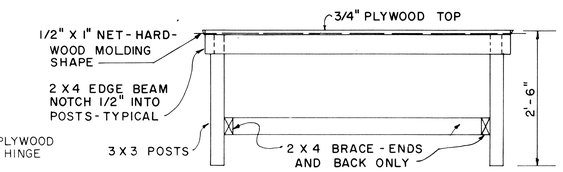

ELEVATION

1'-6" x 5'-9" PORTABLE WORK TABLE DETAIL

SCALE: 3/4" = 1'-0"

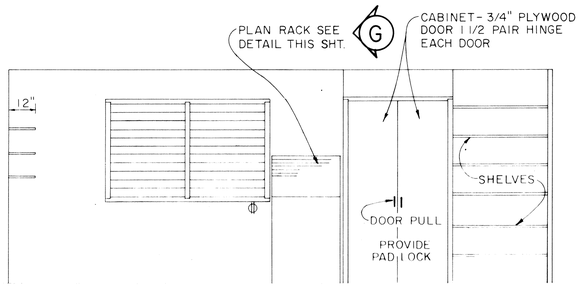

ELEVATION (A1)

SCALE: 3/8" = 1'-0"

APPROVAL RECOMMENDED:

M. Hiozawa — 12-4-69

HIGHWAY DESIGN ENGINEER — DATE

APPROVED:

Stanley E. Sakatani — 12-10-69

ASSISTANT CHIEF, ENGINEERING — DATE

NO.	REVISION	APPROVED BY	DATE

STATE OF HAWAII
DEPARTMENT OF TRANSPORTATION
LAND TRANSPORTATION FACILITIES DIVISION

FIELD OFFICE

Scale - As Noted

ORIGINAL PLAN	SURVEY PLOTTED BY	DATE
	DRAWN BY	"
	TRACED BY	"
NOTE BOOK	DESIGNED BY	"
	QUANTITIES BY	"
No.	CHECKED BY	"

SHEET No. 11 OF 26 SHEETS | DD 636.2

FED. ROAD DIST. NO.	STATE	FED. AID PROJ. NO.	FISCAL YEAR	SHEET NO.	TOTAL SHEETS
HAWAII	HAW.	I-HI-1((13)) 17	1977	49	394

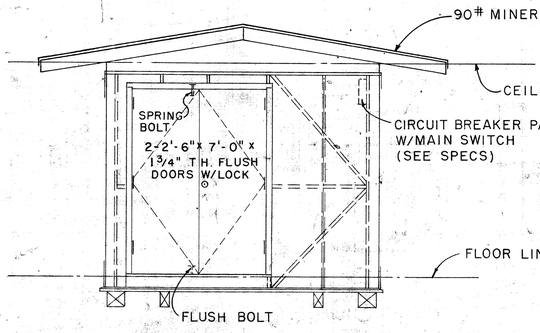

ELEVATION (B)

SCALE: 3/8" = 1'-0"

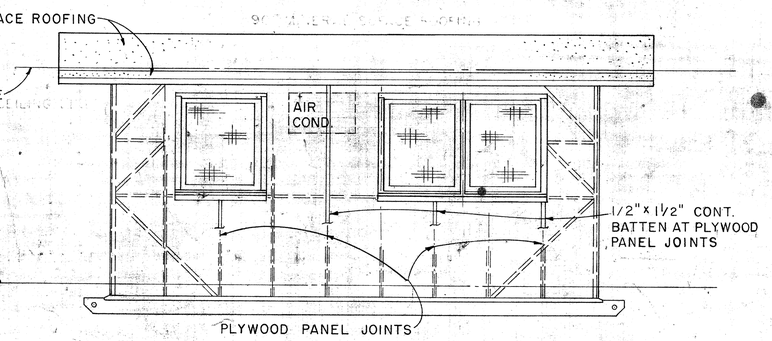

ELEVATION (A)

SCALE: 3/8" = 1'-0"

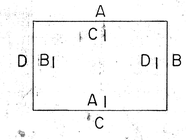

EXTERIOR & INTERIOR KEY

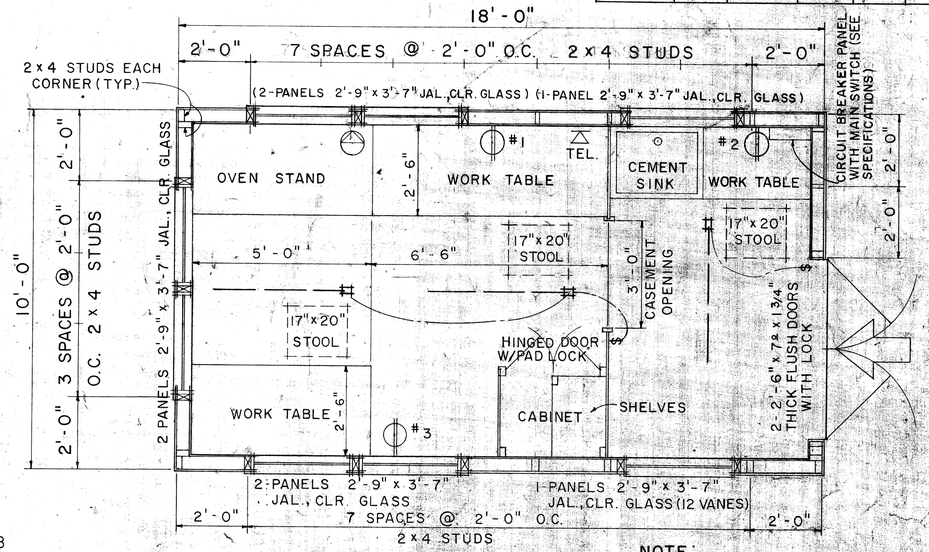

FLOOR PLAN

SCALE: 1/2" = 1'-0"

NOTE:

1. FLUORESCENT FIXTURE SHALL BE 48", 2 LAMP, 40 WATT, RAPID START.
2. TELEPHONE AND WALL OUTLET 4'-0" ABOVE FLOOR.

1-LAYER 30# ASPHALT FELT SHALL BE PLACED BETWEEN ROOFING AND SHEATHING.

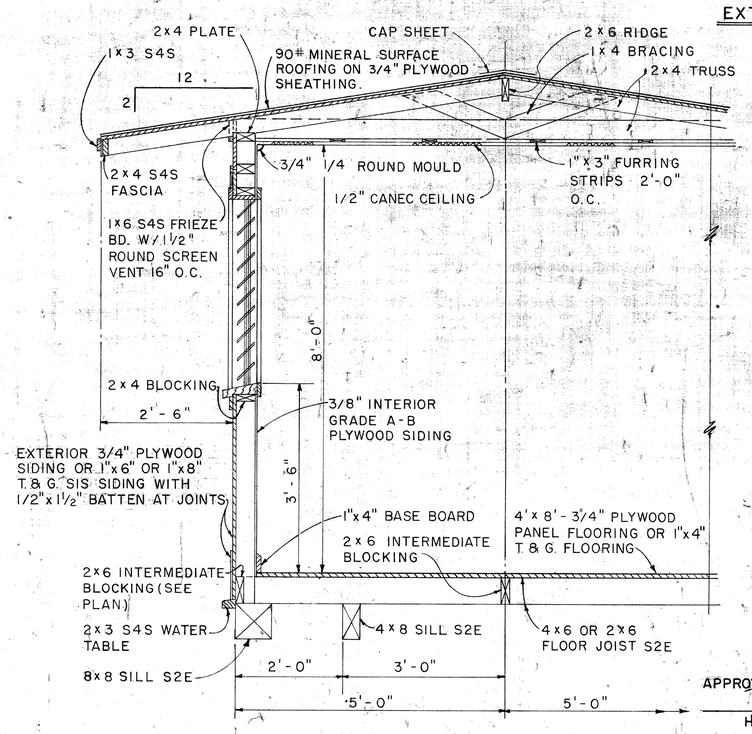

TYPICAL SECTION

SCALE: 3/4" = 1'-0"

NOTE:

ALL 3/4" PLYWOOD SHALL BE EXTERIOR GRADE A-C OR BETTER.

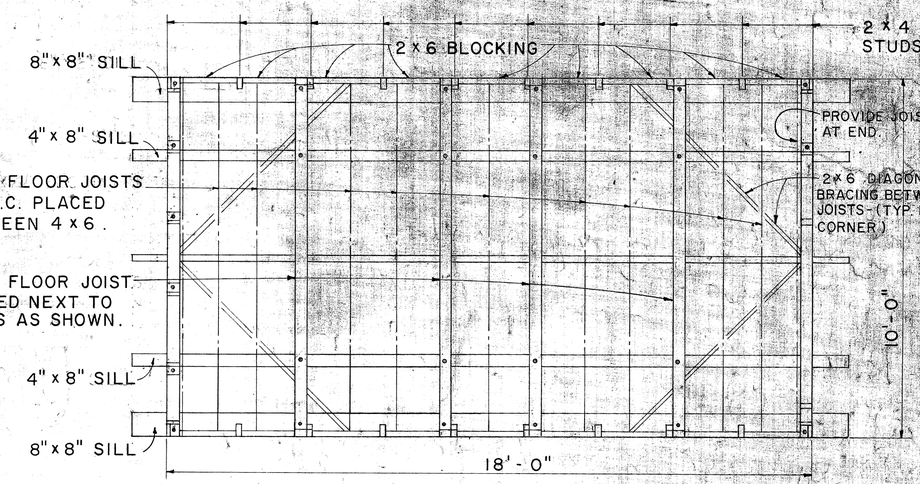

FLOOR FRAMING PLAN

SCALE: 1/2" = 1'-0"

APPROVAL RECOMMENDED:

M. Hirosawa — HIGHWAY DESIGN ENGINEER — 12-4-69 DATE

APPROVED:

[illegible] — ASSISTANT CHIEF, ENGINEERING — 12-10-69 DATE

NO.	REVISION	APPROVED BY	DATE

STATE OF HAWAII
DEPARTMENT OF TRANSPORTATION
LAND TRANSPORTATION FACILITIES DIVISION

PROJECT SITE LABORATORY

Scale As Noted

SHEET No. 12 OF 26 SHEETS | DD 636.3

ORIGINAL PLAN	SURVEY PLOTTED BY	DATE
	DRAWN BY	"
	TRACED BY	"
NOTE BOOK	DESIGNED BY	"
	QUANTITIES BY	"
No.	CHECKED BY	"

FED. ROAD DIST. NO.	STATE	FED. AID PROJ. NO.	FISCAL YEAR	SHEET NO.	TOTAL SHEETS
HAWAII	HAW.	I-HI-1(131):17	1977	50	394

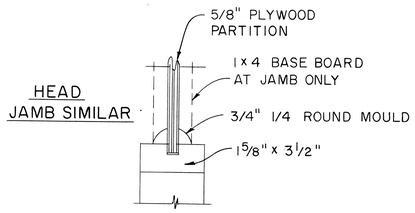

CASEMENT DETAIL

SCALE: 3" = 1'-0"

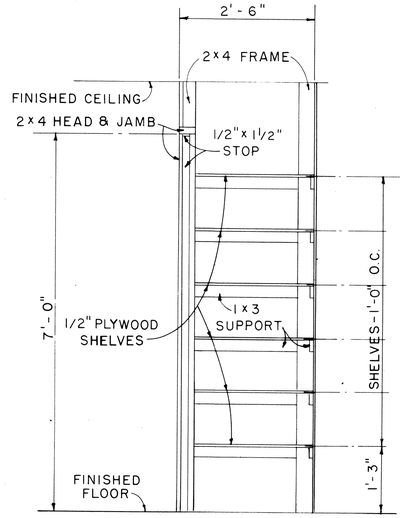

CABINET DETAIL

SCALE: 3/4" = 1'-0"

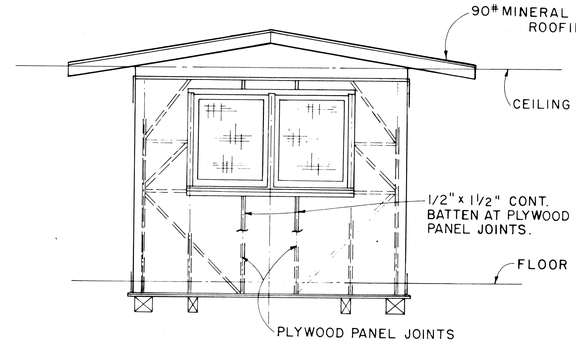

ELEVATION (D)

SCALE: 3/8" = 1'-0"

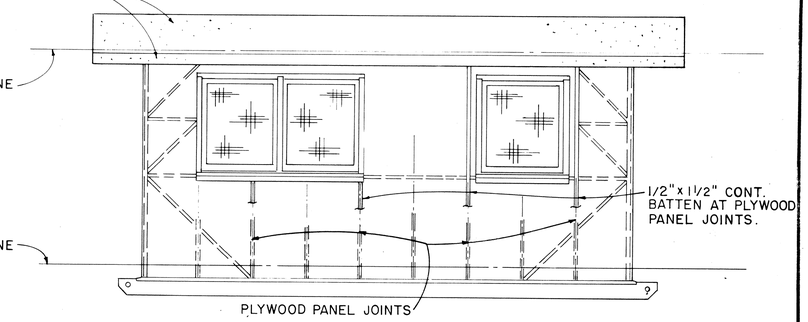

ELEVATION (C)

SCALE: 3/8" = 1'-0"

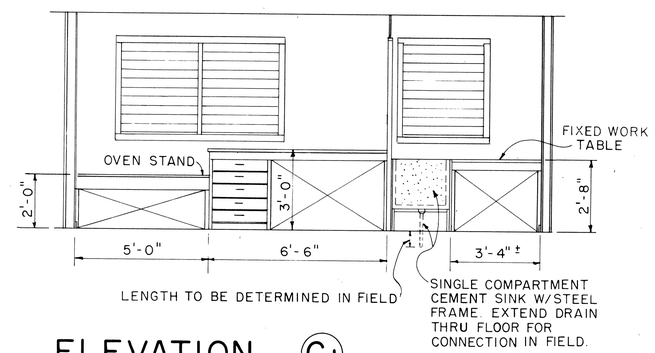

ELEVATION (C1)

SCALE: 3/8" = 1'-0"

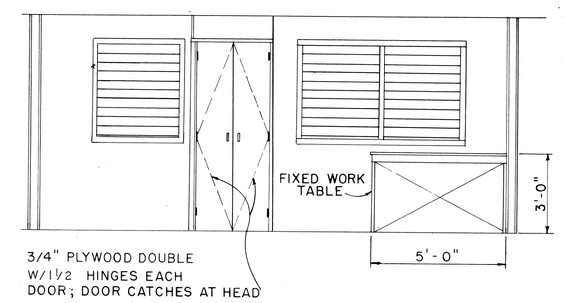

ELEVATION (A1)

SCALE: 3/8" = 1'-0"

APPROVAL RECOMMENDED:

HIGHWAY DESIGN ENGINEER — DATE 12-4-69

APPROVED:

ASSISTANT CHIEF, ENGINEERING — DATE 12-10-69

NO.	REVISION	APPROVED BY	DATE

STATE OF HAWAII
DEPARTMENT OF TRANSPORTATION
LAND TRANSPORTATION FACILITIES DIVISION

PROJECT SITE LABORATORY

Scale: As Noted

SHEET No. 13 OF 26 SHEETS | DD 636.4

ORIGINAL PLAN		DATE
	SURVEY PLOTTED BY	
	DRAWN BY	
	TRACED BY	"
NOTE BOOK	DESIGNED BY	"
	QUANTITIES BY	"
No.	CHECKED BY	"

FED. ROAD DIST. NO.	STATE	FED. AID PROJ. NO.	FISCAL YEAR	SHEET NO.	TOTAL SHEETS
HAWAII	HAWAII	I-H1-1(131)17	1977	51	394

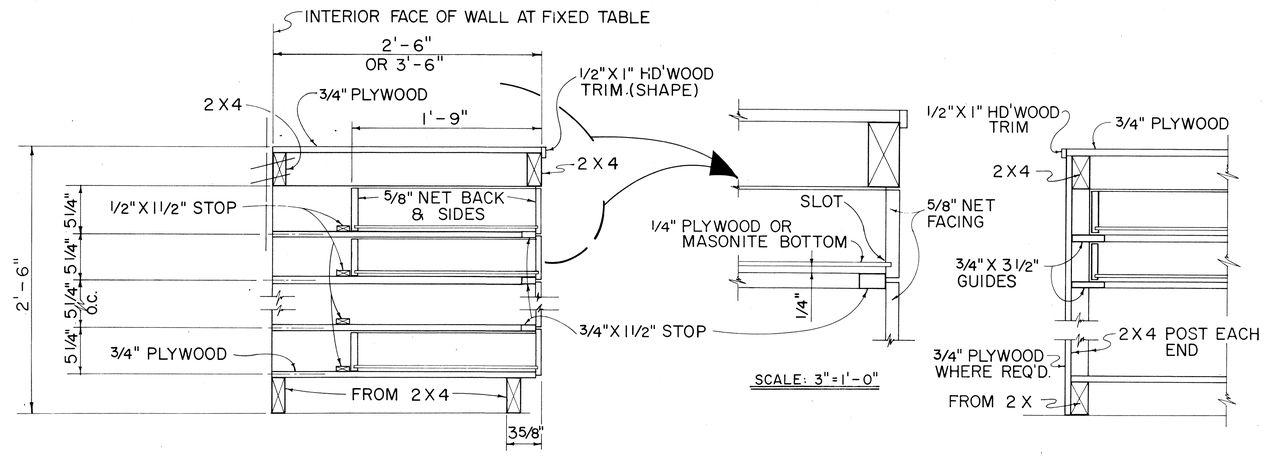

CROSS SECTION
SCALE: 1 1/2"=1'-0"

END SECTION
SCALE: 1 1/2"=1'-0"

TYPICAL WORK TABLE DRAWER DETAIL

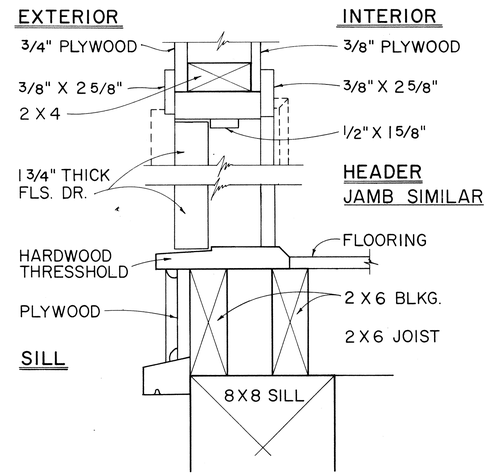

TYP. SWING OUT DOOR

TYPICAL SINGLE OR DOUBLE EXTERIOR DOOR DETAIL

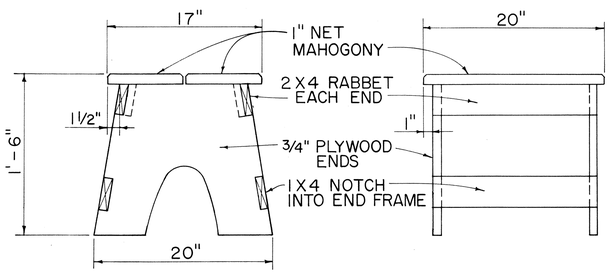

TYPICAL STOOL DETAIL

SCALE: 1 1/2"=1'-0"

NOTE: CONTRACTOR MAY WITH THE APPROVAL OF THE ENGINEER FURNISH THE FIELD OFFICE OR PROJECT SITE LABORATORY WITH STOOLS OTHER THAN THE TYPE SHOWN IN THE DETAIL.

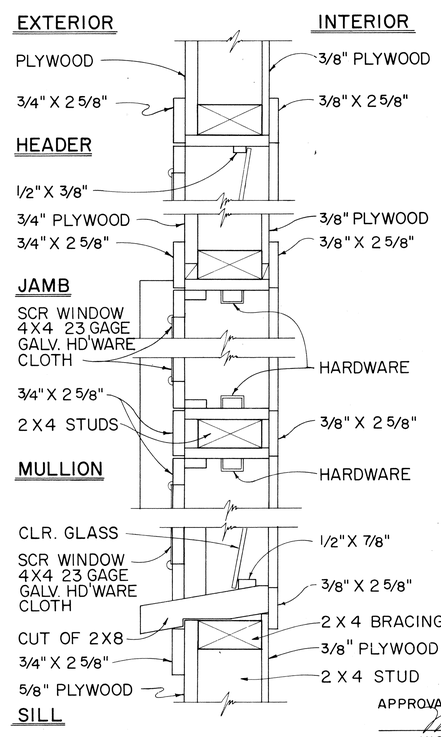

TYPICAL DETAIL JALOUSIES WINDOWS

SCALE: 3"=1'-0"

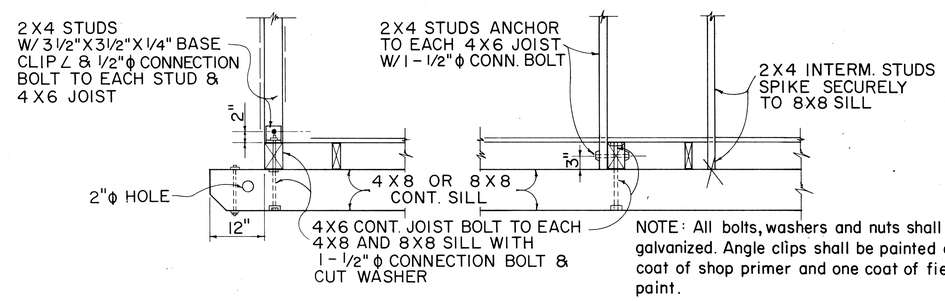

NOTE: All bolts, washers and nuts shall be galvanized. Angle clips shall be painted one coat of shop primer and one coat of field paint.

AT ENDS OF BLDG. ALONG SIDES OF BLDG.

TYPICAL 2X4 STUD & 4X6 FLOOR JOIST BASE CONNECTION DETAILS

APPROVAL RECOMMENDED:
HIGHWAY DESIGN ENGINEER — DATE 12-4-69

APPROVED:
ASSISTANT CHIEF, ENGINEERING — DATE 12-10-69

NO.	REVISION	APPROVED BY	DATE

STATE OF HAWAII
DEPARTMENT OF TRANSPORTATION
LAND TRANSPORTATION FACILITIES DIVISION

FIELD OFFICE
&
PROJECT SITE LABORATORY

Scale: As Noted

SHEET No. 14 OF 26 SHEETS | DD 636.5

ORIGINAL PLAN — SURVEY PLOTTED BY / DRAWN BY / TRACED BY / DESIGNED BY / QUANTITIES BY / CHECKED BY — DATE
NOTE BOOK No.

FED. ROAD DIST. NO.	STATE	FED. AID PROJ. NO.	FISCAL YEAR	SHEET NO.	TOTAL SHEETS
HAWAII	HAW.	I-H1-1(131)17	1977	52	394

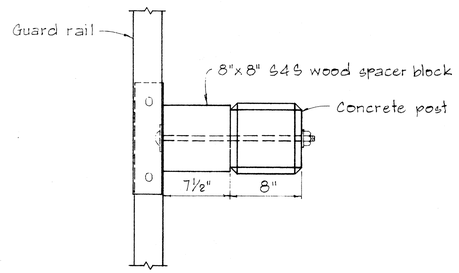

PLAN

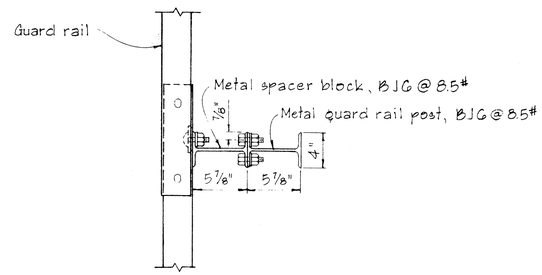

PLAN

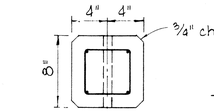

TOP VIEW

NOTE:
Concrete post shall be precast

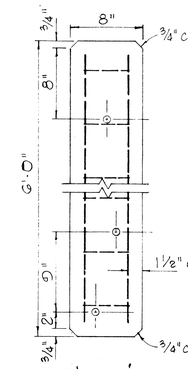

FRONT VIEW

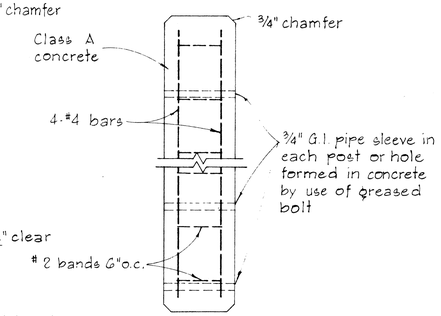

SIDE VIEW

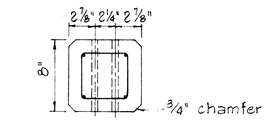

BOTTOM VIEW

DETAIL OF CONCRETE POST

SCALE: 1½" = 1'-0"

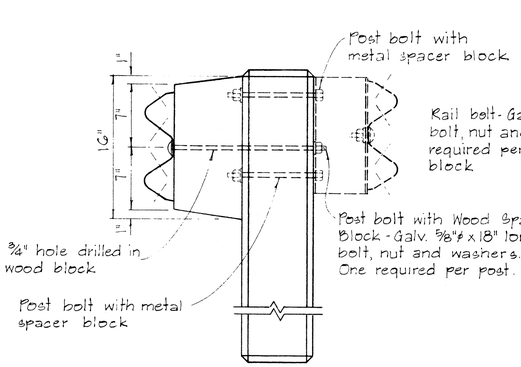

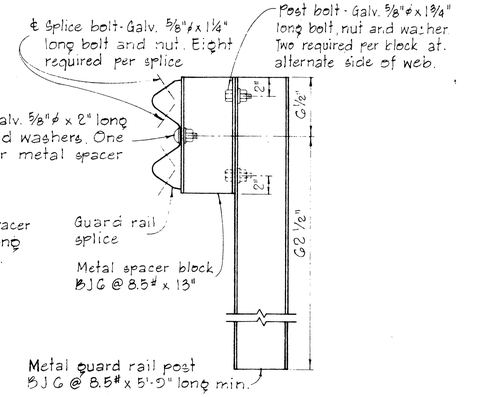

SINGLE METAL GUARD RAIL ON METAL POST WITH METAL SPACER BLOCK

SCALE: 1½" = 1'-0"

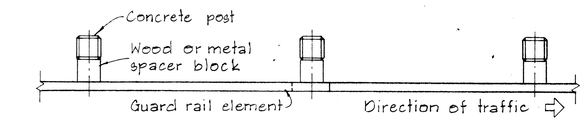

PLAN

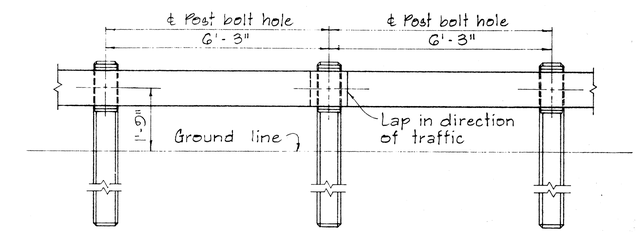

ELEVATION

METAL GUARD RAIL ON CONCRETE POST WITH WOOD OR METAL SPACER BLOCK

SCALE: ½" = 1'-0"

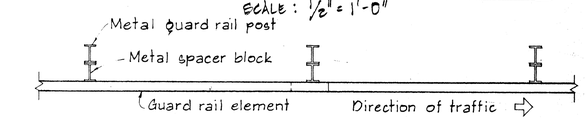

PLAN

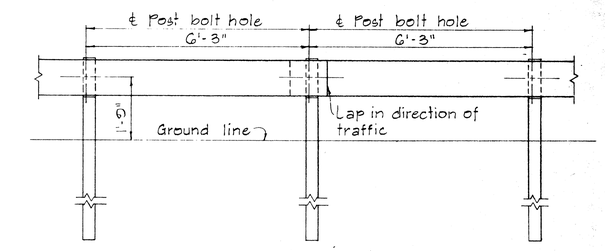

ELEVATION

METAL GUARD RAIL ON METAL POST WITH METAL SPACER BLOCK

SCALE: ½" = 1'-0"

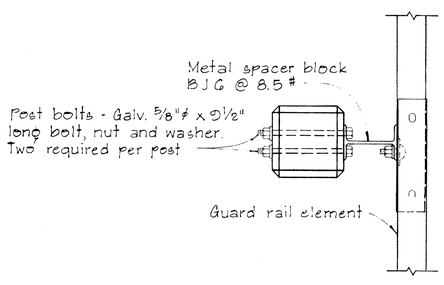

PLAN

SINGLE METAL GUARD RAIL ON PRECAST CONCRETE POST WITH WOOD OR METAL SPACER BLOCK

SCALE: 1½" = 1'-0"

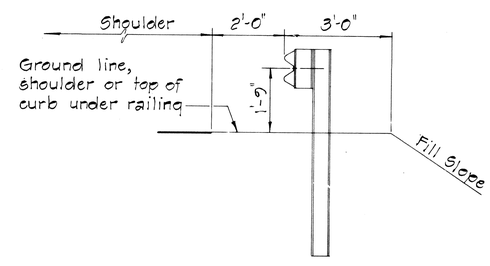

AT SHOULDER SECTION

TYPICAL METAL GUARD RAIL DETAIL

SCALE: ½" = 1'-0"

APPROVAL RECOMMENDED:
Euichi Tanaka — TRAFFIC ENGINEER — 12/23/69 DATE

APPROVED:
Hubert G. Gehrdes — ASSISTANT CHIEF, ENGINEERING — 12-30-69 DATE

NO.	REVISION	APPROVED BY	DATE

STATE OF HAWAII
DEPARTMENT OF TRANSPORTATION
LAND TRANSPORTATION FACILITIES DIVISION

STANDARD DETAILS

METAL GUARD RAIL

SCALE: AS SHOWN — NOV. 1968

SHEET No. 15 OF 26 SHEETS — DT 500

ORIGINAL PLAN — SURVEY PLOTTED BY — DRAWN BY — TRACED BY — DESIGNED BY — QUANTITIES BY — CHECKED BY — DATE — NOTE BOOK No.

PRINTED ON NO. 1000H CLEARPRINT

FED. ROAD DIST. NO.	STATE	FED. AID PROJ. NO.	FISCAL YEAR	SHEET NO.	TOTAL SHEETS
HAWAII	HAW.	I-H1-1(131):17	1977	53	394

BOLT DIMENSIONS		
TYPE A BOLT	D	L
Splice Bolt	5/16"	1 1/4"
Post Bolt for Conc. Post w/ Double Wood Blocks	3/32"	24"
Post Bolt for Conc. Post w/ Single Wood Block	3/32"	18"
Rail Bolt for Metal Block	3/32"	2"

BOLT DIMENSIONS	
TYPE B BOLT	L
Post Bolt for Conc. Post w/ Metal Blocks	9 1/2"
Post Bolt for Metal Post w/ Metal Block	1 3/4"

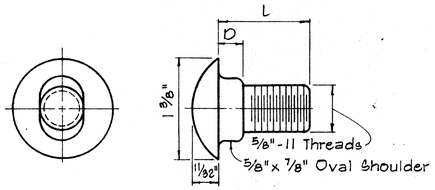

TYPE A BOLT

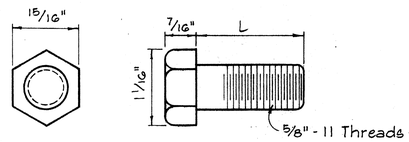

TYPE B BOLT

SPLICE RAIL AND POST BOLTS

Scale: Full Size

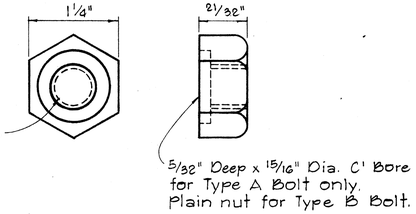

HEXAGON NUT

Scale: Full Size

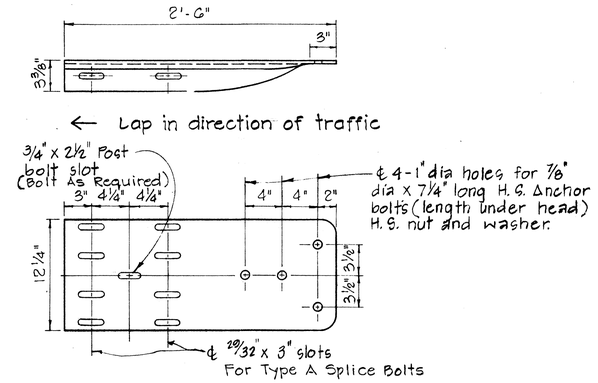

SPECIAL END SHOE

Scale: 1 1/2" = 1'-0"

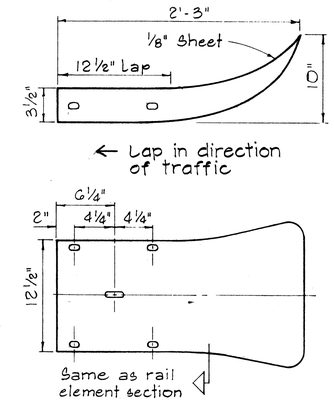

FLARED END

Scale: 1 1/2" = 1'-0"

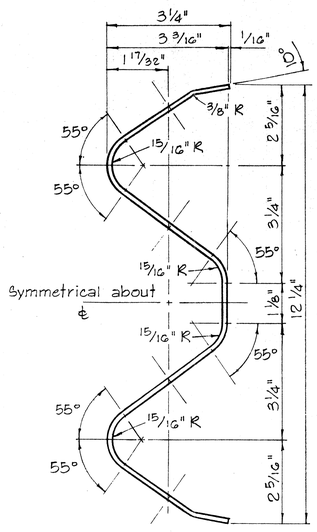

RAIL ELEMENT SECTION

Scale: 6" = 1'-0"

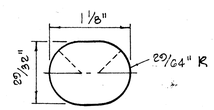

SPLICE BOLT SLOT

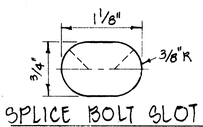

SPLICE BOLT SLOT FOR ALL ENDS

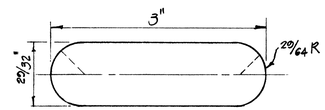

SPLICE BOLT SLOT FOR SPECIAL END SHOE

Scale: Full Size

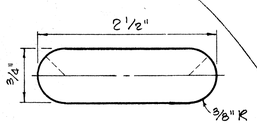

POST BOLT SLOT

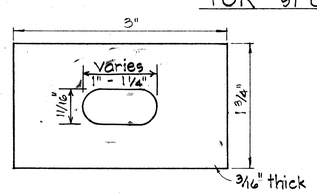

RAIL WASHER

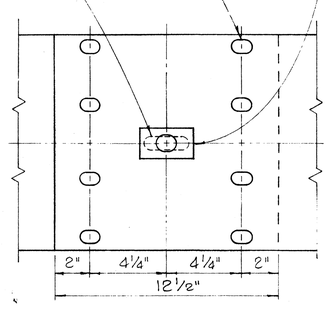

RAIL SPLICE

Scale: 3" = 1'-0"

NOTES:

1. H.S. Bolts shall conform to the requirements of ASTM A 325.
2. Special End Shoe shall be fabricated from 10 Gage steel conforming to the requirements of AASHO 180.

MEDIAN END DIMENSIONS		
TYPE OF POST AND BLOCK	W	R
Double Metal Guard Rail on Concrete Post with Wood Blocks	29 3/4"	14 7/8"
Double Metal Guard Rail on Concrete Post with Metal Blocks (BJG)	26 1/2"	13 1/4"
Double Metal Guard Rail on Metal Post with Metal Blocks (BJG)	24 3/8"	12 3/16"

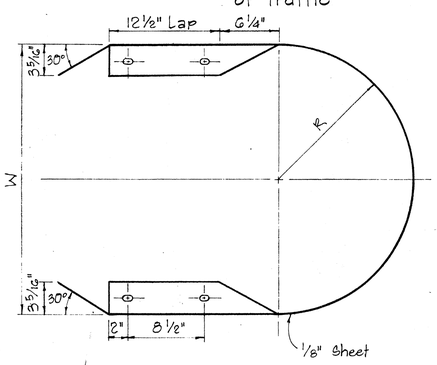

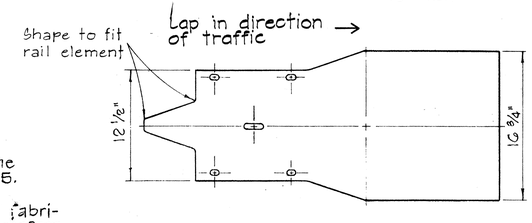

MEDIAN END

Scale: 1 1/2" = 1'-0"

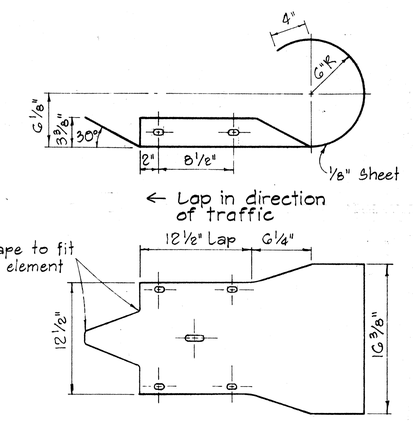

CURVED END

Scale: 1 1/2" = 1'-0"

APPROVAL RECOMMENDED:

Eiichi Tanaka — 12/29/69

TRAFFIC ENGINEER — DATE

APPROVED:

[illegible] — 12-30-69

ASSISTANT CHIEF, ENGINEERING — DATE

NO	REVISION	APPROVED BY	DATE
1	Revised Hole Size for Rectangular Rail Washer	H.T.	8/10/77

STATE OF HAWAII
DEPARTMENT OF TRANSPORTATION
LAND TRANSPORTATION FACILITIES DIVISION

STANDARD DETAILS

METAL GUARD RAIL

Scale: As Noted — August, 1968

SHEET No. 16 OF 26 SHEETS | DT 501

ORIGINAL PLAN	SURVEY PLOTTED BY	DATE
	DRAWN BY	
	TRACED BY	
NOTE BOOK	DESIGNED BY	
No.	QUANTITIES BY	
	CHECKED BY	

PRINTED ON NO. 1000H CLEARPRINT

FED. ROAD DIST. NO.	STATE	FED. AID PROJ. NO.	FISCAL YEAR	SHEET NO.	TOTAL SHEETS
HAWAII	HAW.	I-H1-1(131):17	1977	54	394

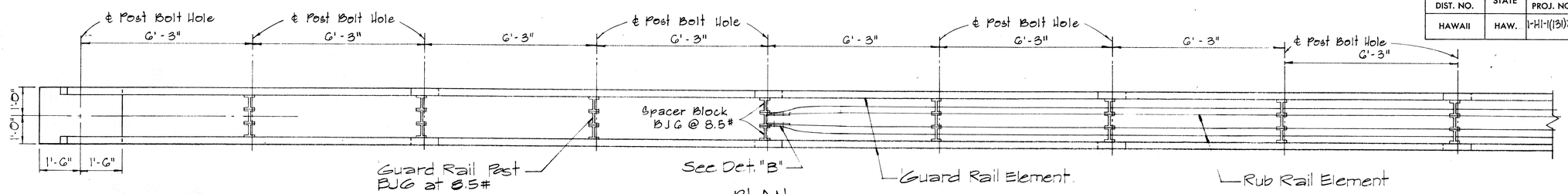

PLAN

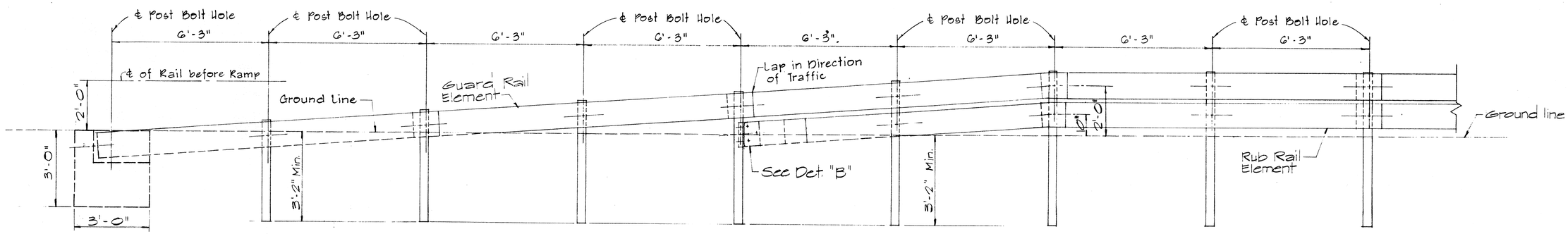

ELEVATION

STRAIGHT APPROACH - RAMP END ANCHORAGE (MEDIAN)

Scale: 1/2" = 1'-0"

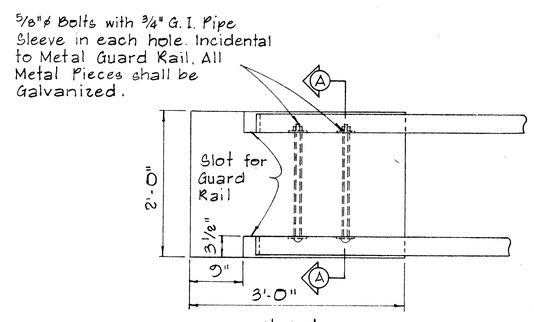

PLAN

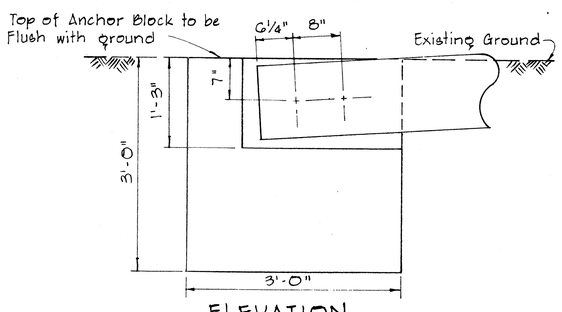

ELEVATION

CONCRETE ANCHOR BLOCK FOR RAMP END

Scale: 1" = 1'-0"

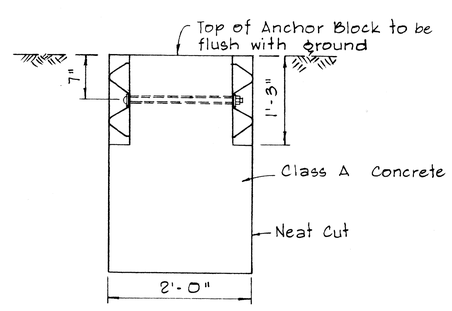

SECTION A-A

NOTE:
Concrete, Excavation, and Miscellaneous Appurtenances necessary to anchor the Guard Rail Ends, shall be incidental to the Metal Guard Rail.

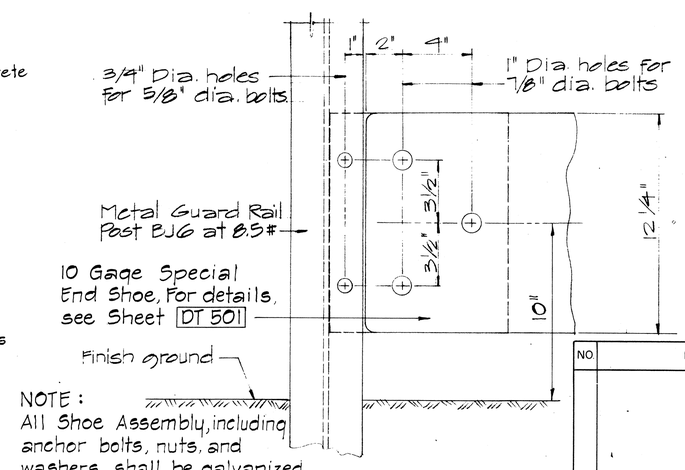

NOTE:
All Shoe Assembly, including anchor bolts, nuts, and washers, shall be galvanized.

ELEVATION

DETAIL "B"

Sc. 3" = 1'-0"

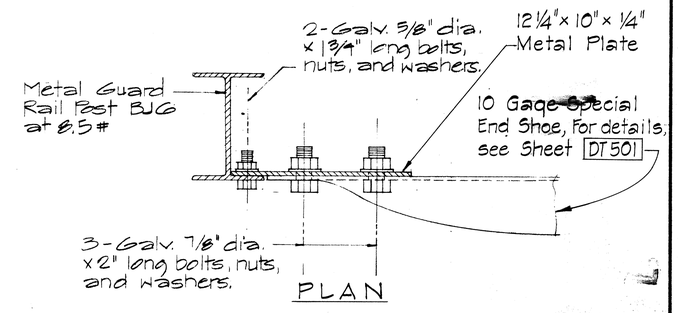

PLAN

APPROVAL RECOMMENDED:
Eiichi Tanaka
TRAFFIC ENGINEER — DATE

APPROVED:
Shulum Z. Sadai
ASSISTANT CHIEF, ENGINEERING — DATE 12-30-69

NO	REVISION	APPROVED BY	DATE

STATE OF HAWAII
DEPARTMENT OF TRANSPORTATION
LAND TRANSPORTATION FACILITIES DIVISION

STANDARD DETAIL
GUARD RAIL
RAMP END ANCHORAGE

Scale: as Noted — August, 1968

SHEET No. 17 OF 26 SHEETS — DT 502

ORIGINAL PLAN	SURVEY PLOTTED BY	DATE
	DRAWN BY	
	TRACED BY	
NOTE BOOK	DESIGNED BY	
No.	QUANTITIES BY	
	CHECKED BY	

PRINTED ON NO. 1000H CLEARPRINT

FED. ROAD DIST. NO.	STATE	FED. AID PROJ. NO.	FISCAL YEAR	SHEET NO.	TOTAL SHEETS
HAWAII	HAW.	I-H1-1(131):17	1977	55	394

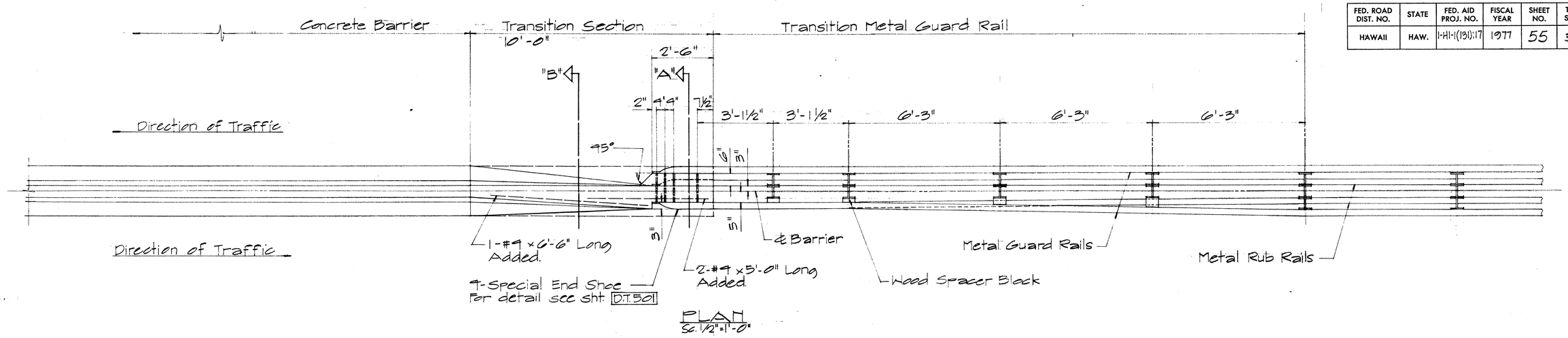

PLAN
Sc. ½" = 1'-0"

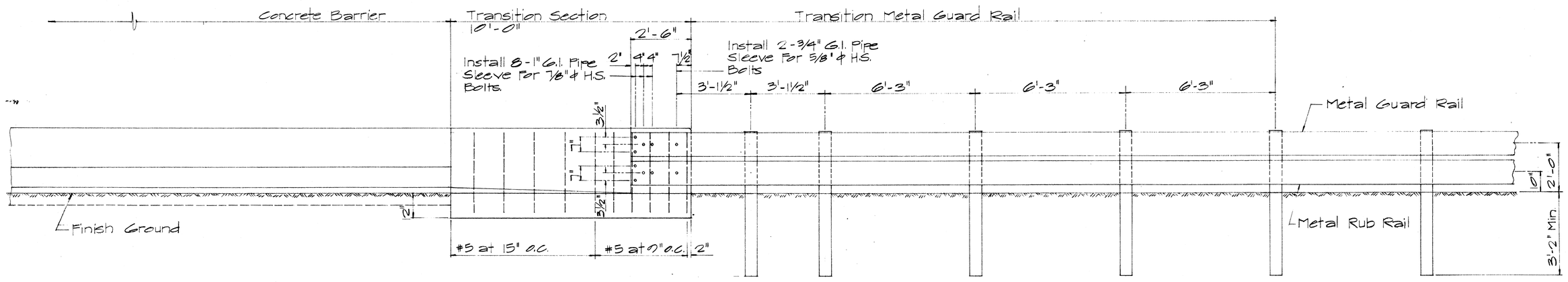

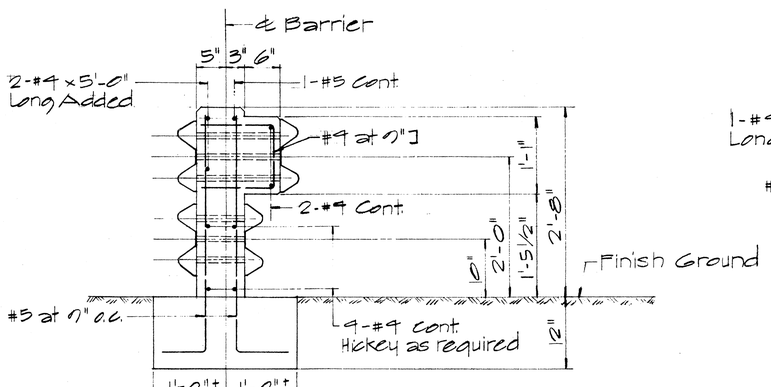

SECTION "A"
Sc. 1" = 1'-0"

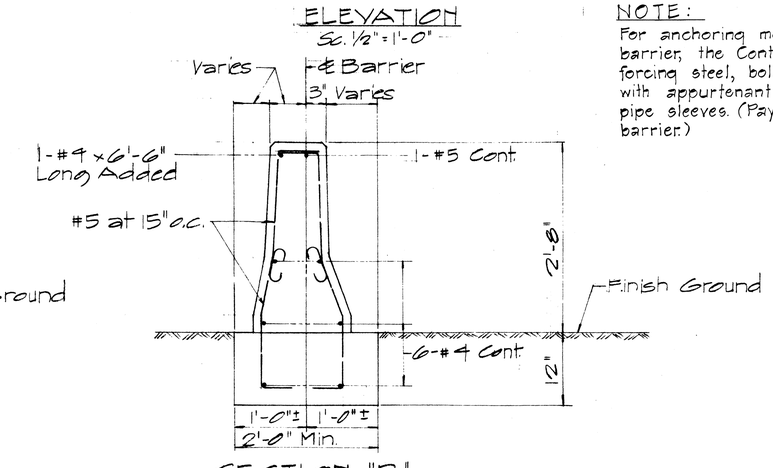

ELEVATION
Sc. ½" = 1'-0"

SECTION "B"
Sc. 1" = 1'-0"

NOTE:
For anchoring metal guard rail elements to concrete barrier, the Contractor shall furnish and install reinforcing steel, bolts of appropriate lengths and size with appurtenant washers, nuts, wooden blocks and pipe sleeves. (Payments shall be incidental to concrete barrier.)

APPROVAL RECOMMENDED:
Eiichi Tanaka — 12/29/69
TRAFFIC ENGINEER — DATE

APPROVED:
[signature] — 12-30-69
ASSISTANT CHIEF, ENGINEERING — DATE

NO.	REVISION	APPROVED BY	DATE

STATE OF HAWAII
DEPARTMENT OF TRANSPORTATION
LAND TRANSPORTATION FACILITIES DIVISION

STANDARD DETAIL
METAL GUARD RAIL
CONNECTION TO CONC. BARRIER

Scale As Noted — Feb. 1969

SHEET No. 18 OF 26 SHEETS | DT 513

ORIGINAL PLAN	SURVEY PLOTTED BY	DATE
	DRAWN BY	
	TRACED BY	
NOTE BOOK	DESIGNED BY	
	QUANTITIES BY	
No.	CHECKED BY	

PRINTED ON NO. 1000H CLEARPRINT

FED. ROAD DIST. NO.	STATE	FED. AID PROJ. NO.	FISCAL YEAR	SHEET NO.	TOTAL SHEETS
HAWAII	HAW.	I-HI-1(131):17	1977	56	394

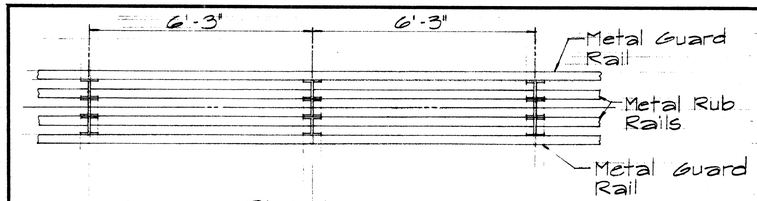

PLAN

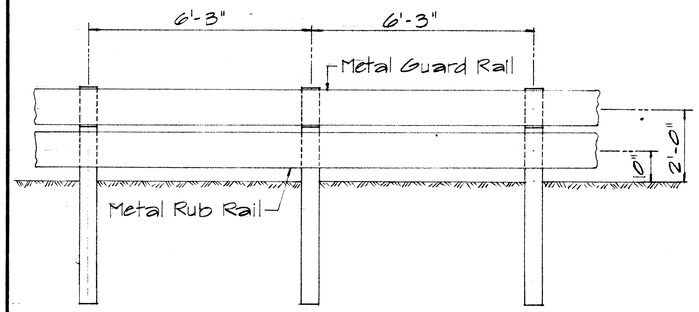

ELEVATION

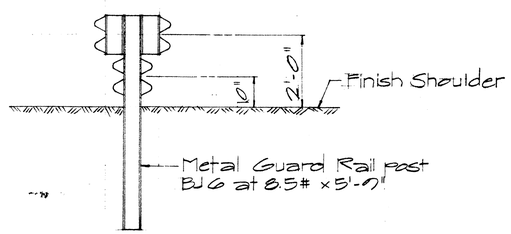

SECTION

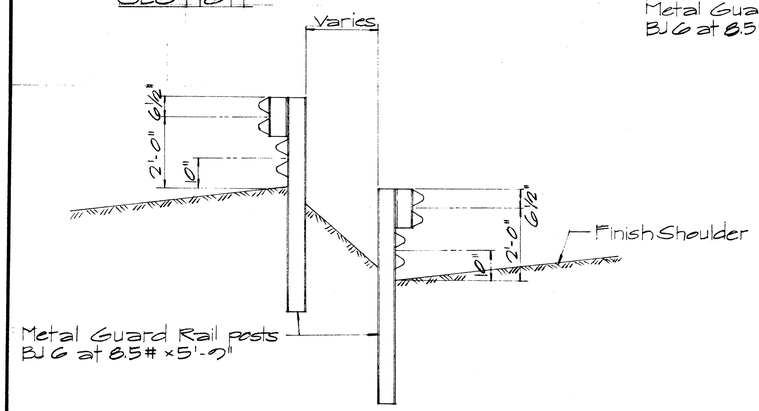

TYP. DOUBLE POST SEC.

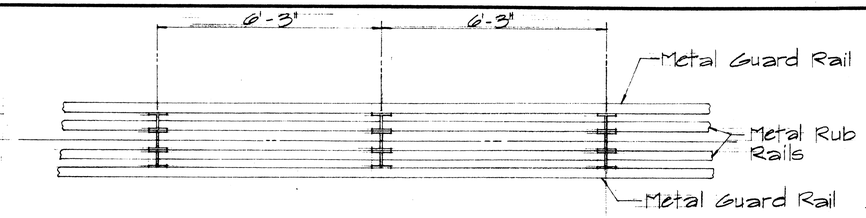

PLAN

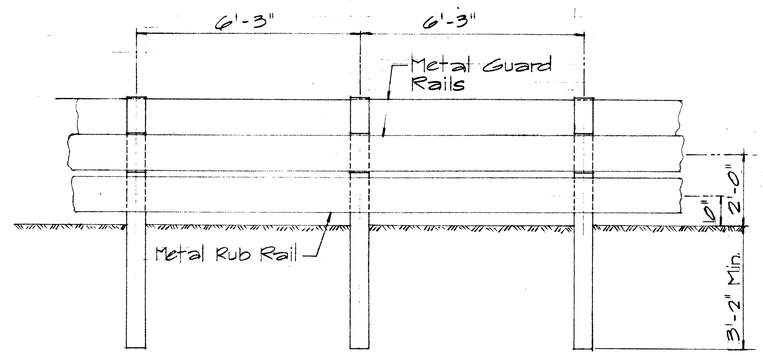

ELEVATION

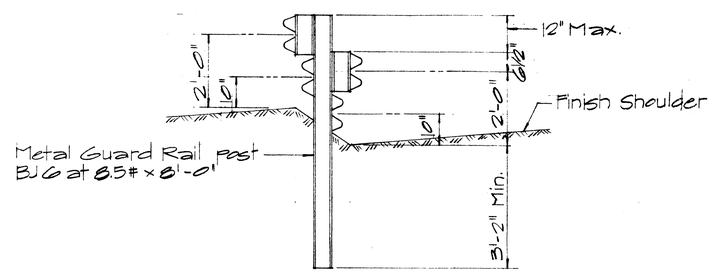

SECTION

TYPICAL SAW TOOTH INSTALLATION

Sc. 1/2" = 1'-0"

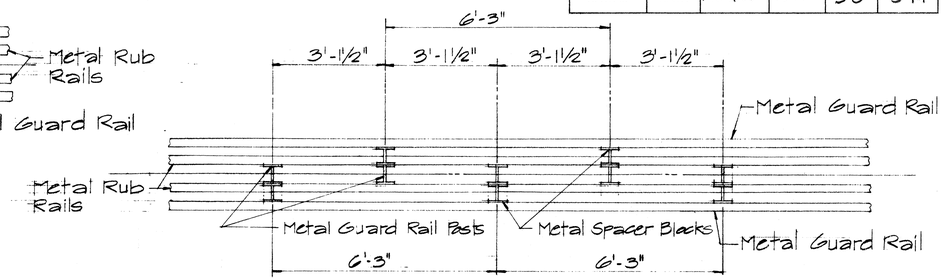

PLAN

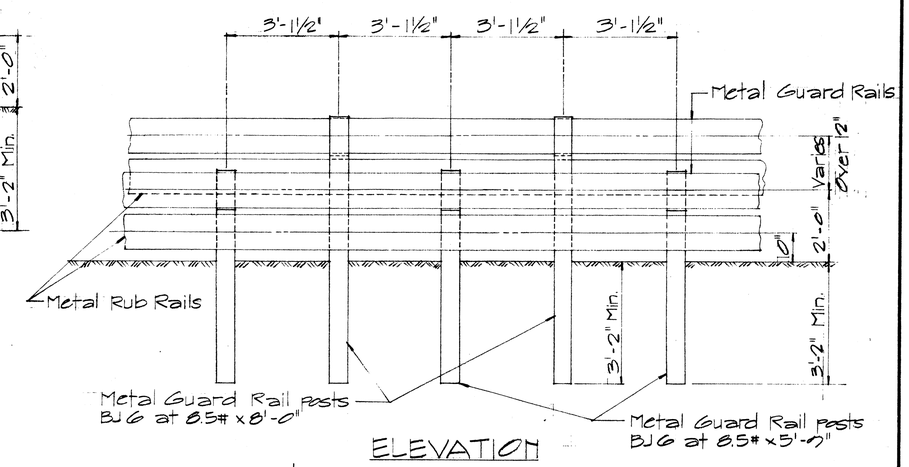

ELEVATION

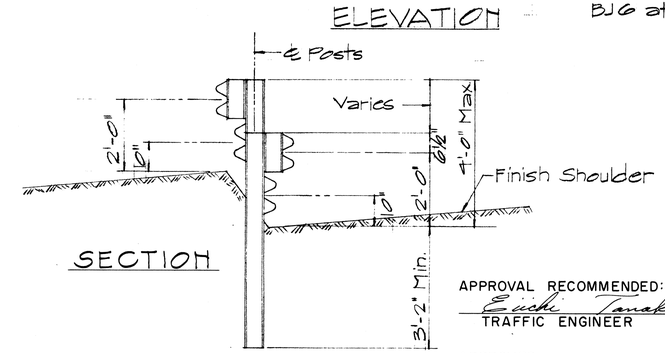

SECTION

TYPICAL STAGGERED INSTALLATION

Sc. 1/2" = 1'-0"

APPROVAL RECOMMENDED:

Euichi Tanaka — TRAFFIC ENGINEER — 12/29/69 DATE

APPROVED:

[illegible] — ASSISTANT CHIEF, ENGINEERING — 12-30-69 DATE

NO.	REVISION	APPROVED BY	DATE

STATE OF HAWAII
DEPARTMENT OF TRANSPORTATION
LAND TRANSPORTATION FACILITIES DIVISION

STANDARD DETAIL
METAL GUARD RAIL
WITH RUB RAIL

Scale: 1/2" = 1'-0" Feb. 10, 1969

SHEET No. 19 OF 26 SHEETS DT 514

ORIGINAL PLAN — SURVEY PLOTTED BY / DRAWN BY / TRACED BY / DESIGNED BY / QUANTITIES BY / CHECKED BY / NOTE BOOK No. / DATE

PRINTED ON NO. 1000H CLEARPRINT

FED. ROAD DIST. NO.	STATE	FED. AID PROJ. NO.	FISCAL YEAR	SHEET NO.	TOTAL SHEETS
HAWAII	HAW.	I-HI-1(131):17	1977	57	394

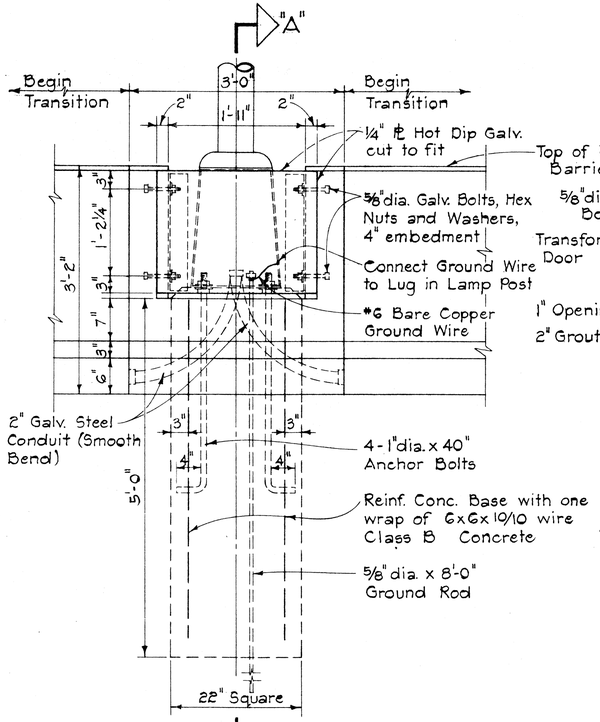

ELEVATION

HIGHWAY LIGHTING STANDARD MOUNTING DETAIL ON TYPE "A" CONCRETE BARRIER

Scale: 1" = 1'-0"

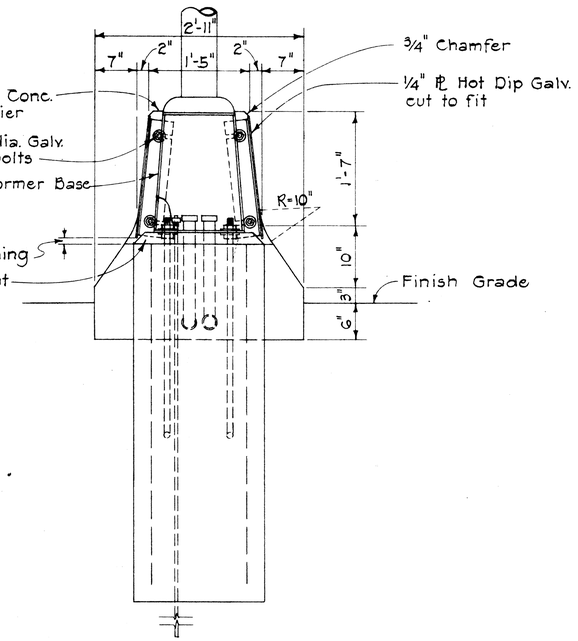

SECTION "A-A"

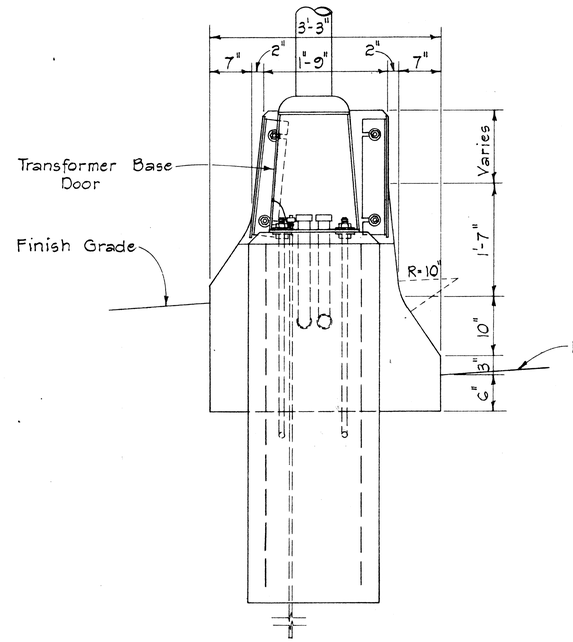

HIGHWAY LIGHTING STANDARD MOUNTING DETAIL ON TYPE "B" CONCRETE BARRIER

Scale: 1" = 1'-0"

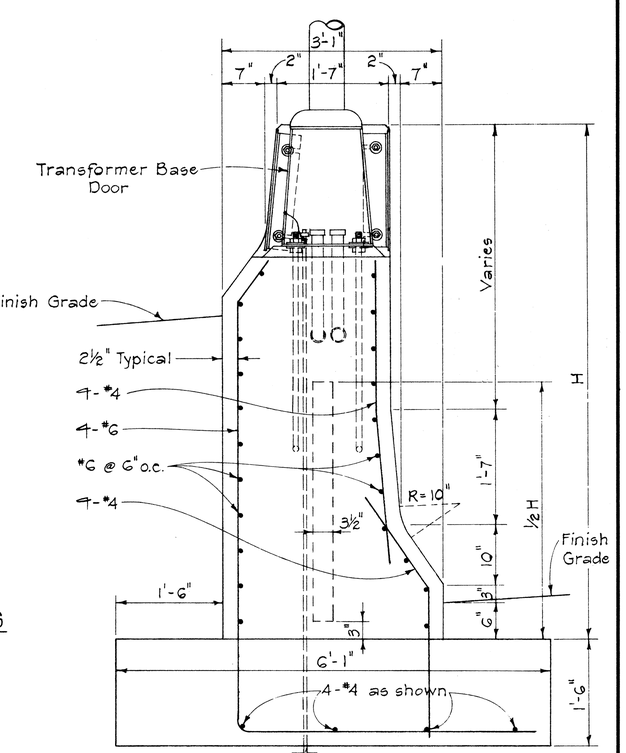

SECTION "B-B"

Scale: 1" = 1'-0"

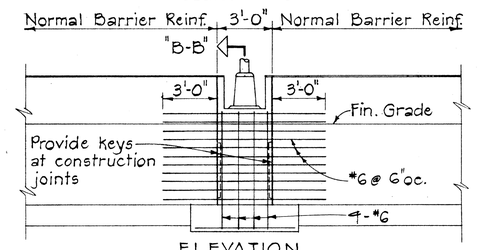

ELEVATION

Scale: 1/4" = 1'-0"

HIGHWAY LIGHTING STANDARD MOUNTING DETAIL ON TYPE "C" & "D" CONC. BARRIER

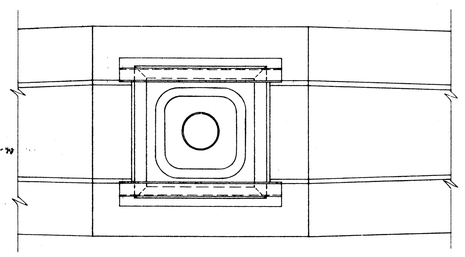

TYPICAL PLAN

Scale: 1" = 1'-0"

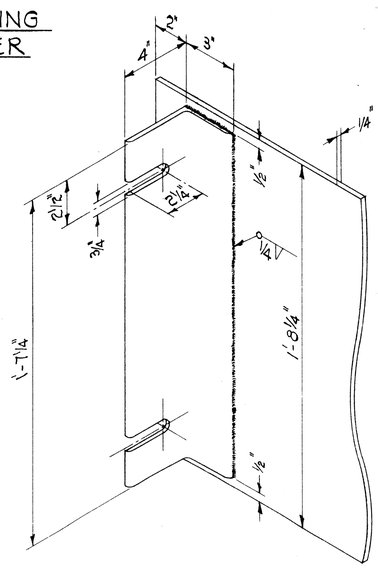

ANGLE IRON - COVER PLATE DETAIL

Scale: 3" = 1'-0"

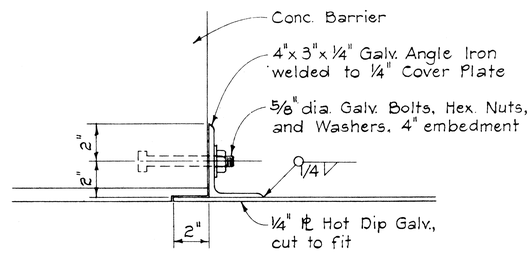

COVER PLATE ANCHOR DETAIL

Scale: 3" = 1'-0"

NOTES:

1. Constructing conc. barrier foundation for Hwy. Lighting Standards shall consist of all work and materials necessary for constructing the 3'-0" concrete barrier section as shown on the plans. The work shall include furnishing and installing cover plate, angle iron, nuts and bolts and all other appurtenances, and labor including galvanizing, as shown and necessary to complete the work.

APPROVAL RECOMMENDED:
Eusebio Tanaka — 12/29/69
TRAFFIC ENGINEER — DATE

APPROVED:
[signature] — 12-30-69
ASSISTANT CHIEF, ENGINEERING — DATE

NO	REVISION	APPROVED BY	DATE

STATE OF HAWAII
DEPARTMENT OF TRANSPORTATION
LAND TRANSPORTATION FACILITIES DIVISION

STANDARD DETAIL
HIGHWAY LIGHTING
STANDARD MOUNTING
DET. ON CONC. BARRIER

Scale: As Shown — Date: April 1969

SHEET No. 20 OF 26 SHEETS — DT 515

ORIGINAL PLAN	SURVEY PLOTTED BY	DATE
	DRAWN BY	
	TRACED BY	
NOTE BOOK	DESIGNED BY	
	QUANTITIES BY	
No.	CHECKED BY	

K+E CRYSTALENE® LA 2920 TRACING PAPER

FED. ROAD DIST. NO.	STATE	FED. AID PROJ. NO.	FISCAL YEAR	SHEET NO.	TOTAL SHEETS
HAWAII	HAW.	I-H1-1(131):17	1977	58	394

NOTE!
Metal guard rail connection to structures requires End Post Connection. See structure plans.

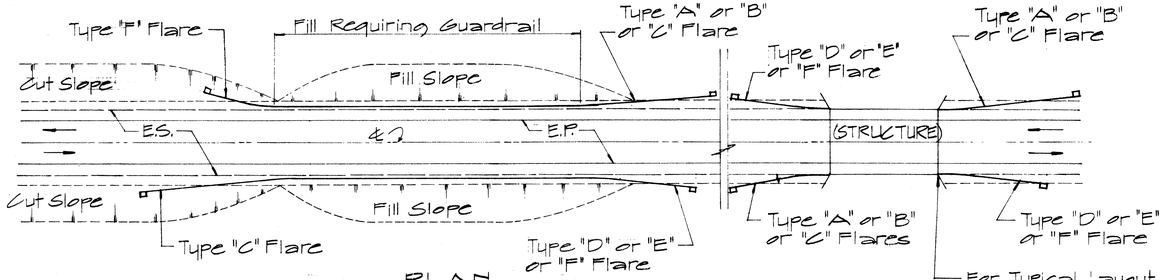

For Typical Layout Plan of End Post Connection See Sheet No. DT 517

PLAN

TWO WAY ROADWAY
Sc. 1" = 40'

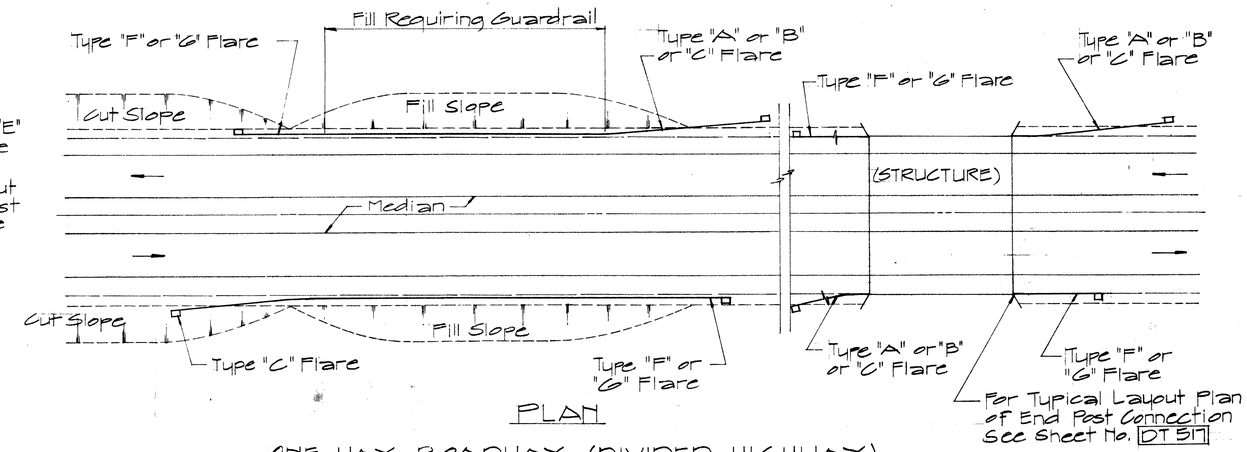

For Typical Layout Plan of End Post Connection See Sheet No. DT 517

PLAN

ONE WAY ROADWAY (DIVIDED HIGHWAY)
Sc. 1" = 40'

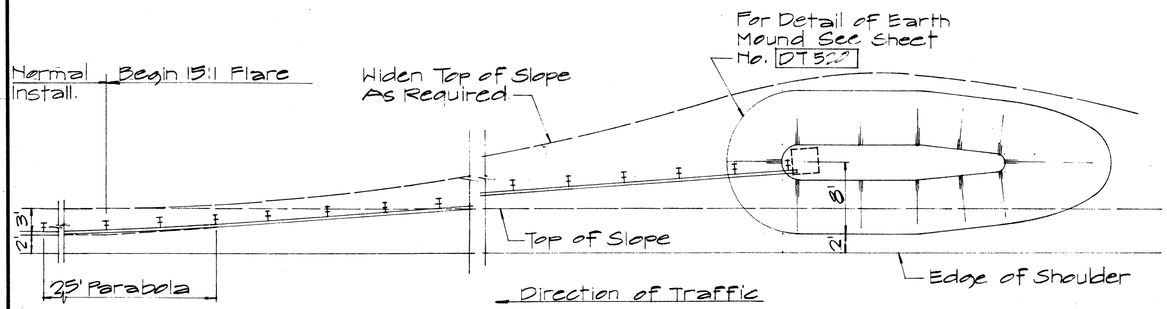

PLAN

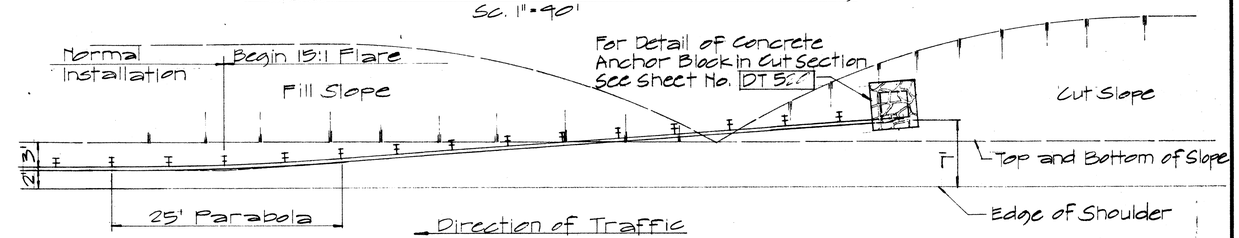

PLAN

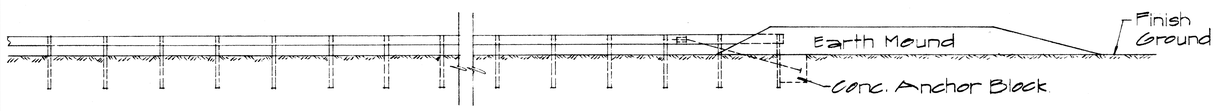

ELEVATION

TYPE "A" FLARE
Sc. 1/8" = 1'-0"

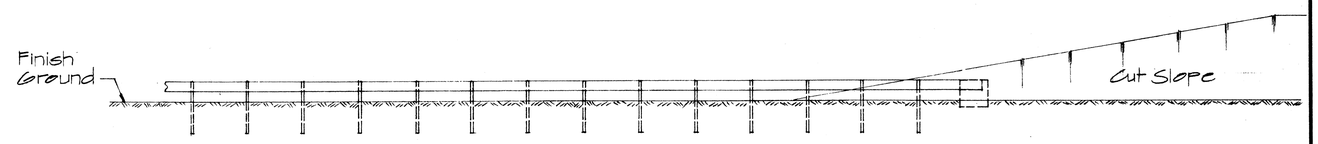

ELEVATION

TYPE "C" FLARE
Sc. 1/8" = 1'-0"

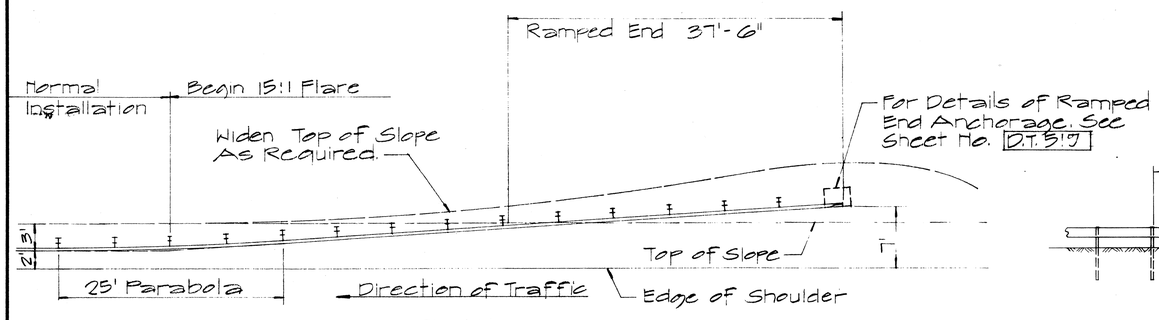

PLAN

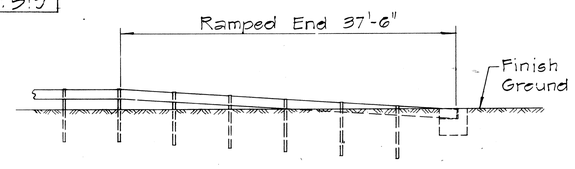

ELEVATION

TYPE "B" FLARE
Sc. 1/8" = 1'-0"

APPROVAL RECOMMENDED:
Euichi Tanaka — TRAFFIC ENGINEER — 12/29/69 DATE

APPROVED:
[signature] — ASSISTANT CHIEF, ENGINEERING — 12-30-69 DATE

NO.	REVISION	APPROVED BY	DATE

STATE OF HAWAII
DEPARTMENT OF TRANSPORTATION
LAND TRANSPORTATION FACILITIES DIVISION

STANDARD DETAILS OF APPROACH END FLARE - ONE & TWO WAY ROADWAY

Sc. As Noted — April 1969

SHEET No. 21 OF 26 SHEETS — DT 516

ORIGINAL PLAN	SURVEY PLOTTED BY	DATE
	DRAWN BY	
	TRACED BY	
	DESIGNED BY	
NOTE BOOK	QUANTITIES BY	
No.	CHECKED BY	

PRINTED ON NO. 1000H CLEARPRINT

FED. ROAD DIST. NO.	STATE	FED. AID PROJ. NO.	FISCAL YEAR	SHEET NO.	TOTAL SHEETS
HAWAII	HAW.	I-H1-1(131):17	1977	59	394

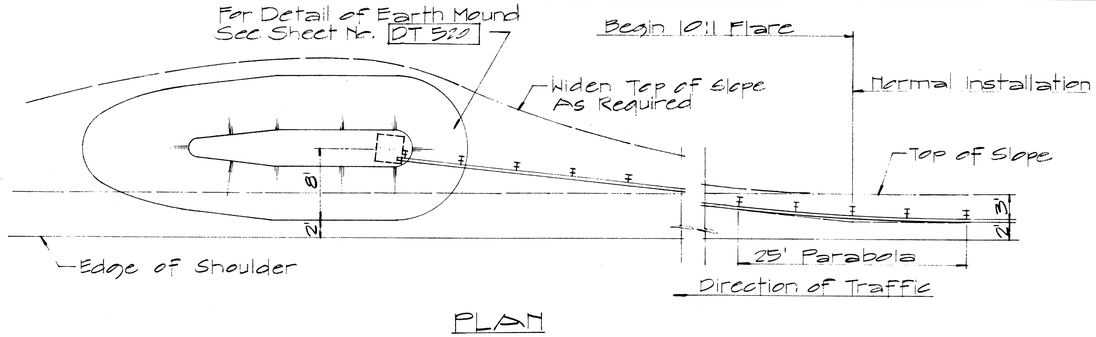

PLAN

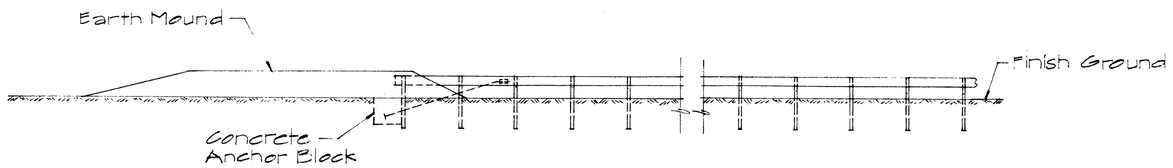

ELEVATION

TYPE "D" FLARE

Sc. 1/8" = 1'-0"

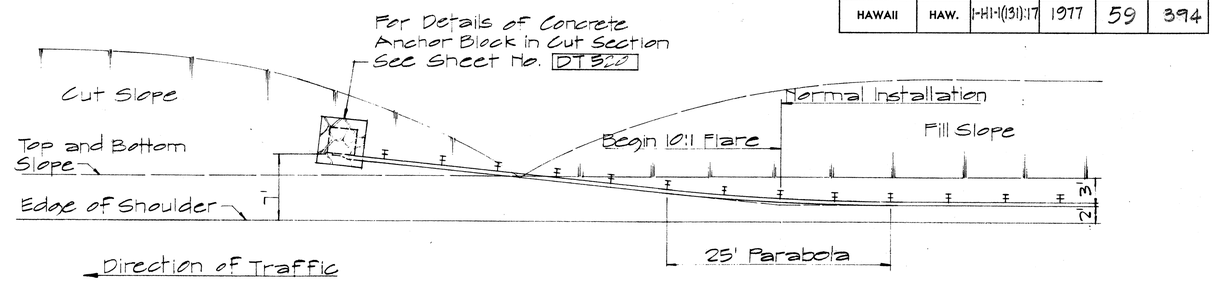

PLAN

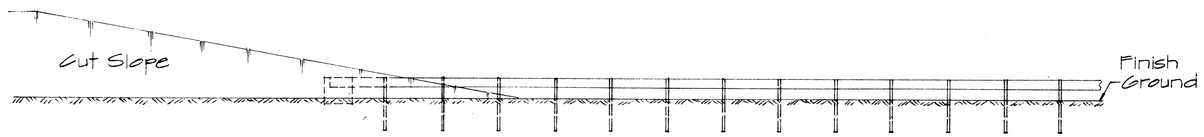

ELEVATION

TYPE "F" FLARE

Sc. 1/8" = 1'-0"

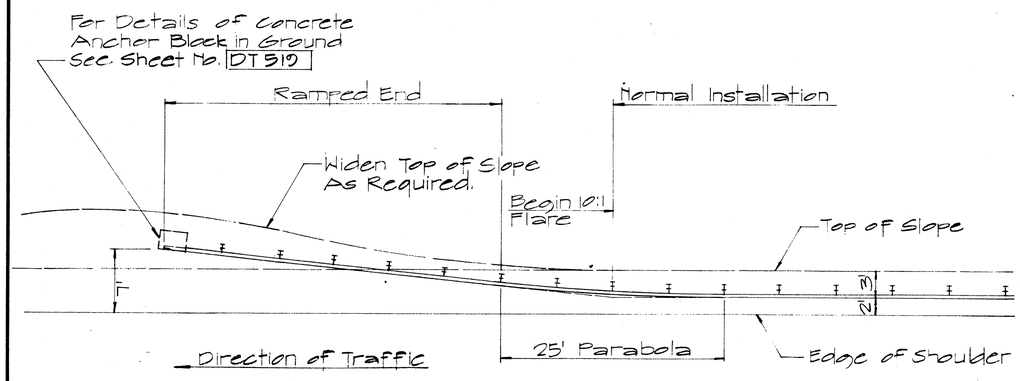

PLAN

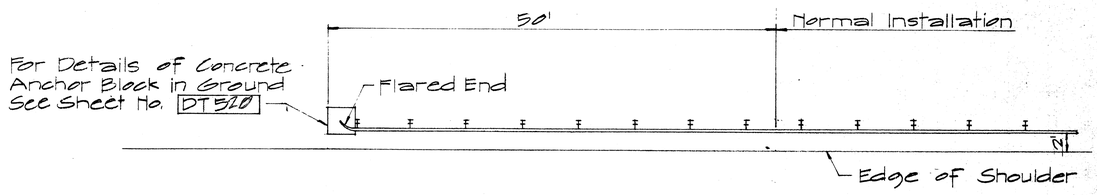

PLAN

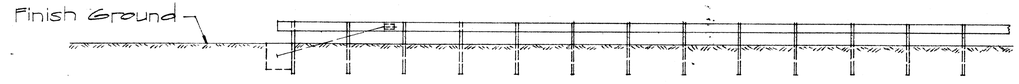

ELEVATION

TYPE "G" FLARE

Sc. 1/8" = 1'-0"

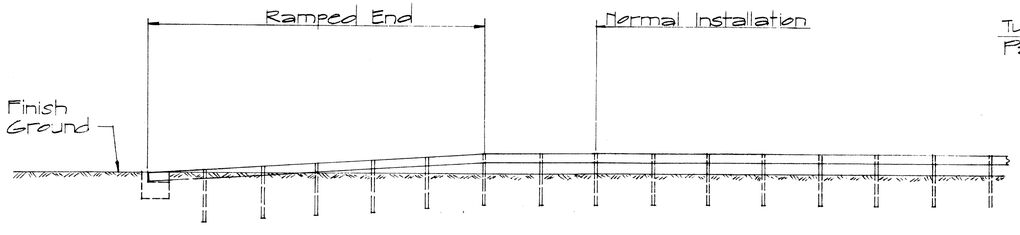

ELEVATION

TYPE "E" FLARE

Sc. 1/8" = 1'-0"

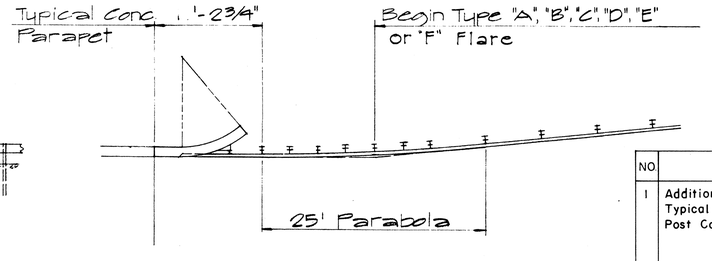

TYPICAL LAYOUT PLAN OF END POST CONNECTION

Sc. 1/8" = 1'-0"

APPROVAL RECOMMENDED:

Euichi Tanaka — 12/29/69

TRAFFIC ENGINEER — DATE

APPROVED:

12-30-69

ASSISTANT CHIEF, ENGINEERING — DATE

NO	REVISION	APPROVED BY	DATE
1	Additional Posts Added to Typical Layout Plan Of End Post Connection	H.C.	4-12-72

STATE OF HAWAII

DEPARTMENT OF TRANSPORTATION

LAND TRANSPORTATION FACILITIES DIVISION

STANDARD DETAILS

TRAILING END FLARE - ONE & TWO WAY ROADWAY

Scale: As Noted — April 1960

SHEET No. 22 OF 26 SHEETS — DT 517

ORIGINAL PLAN	SURVEY PLOTTED BY	DATE
	DRAWN BY	
	TRACED BY	
NOTE BOOK	DESIGNED BY	
	QUANTITIES BY	
No.	CHECKED BY	

PRINTED ON NO. 1000H CLEARPRINT

FED. ROAD DIST. NO.	STATE	FED. AID PROJ. NO.	FISCAL YEAR	SHEET NO.	TOTAL SHEETS
HAWAII	HAW.	I-HI-1(131):17	1977	60	394

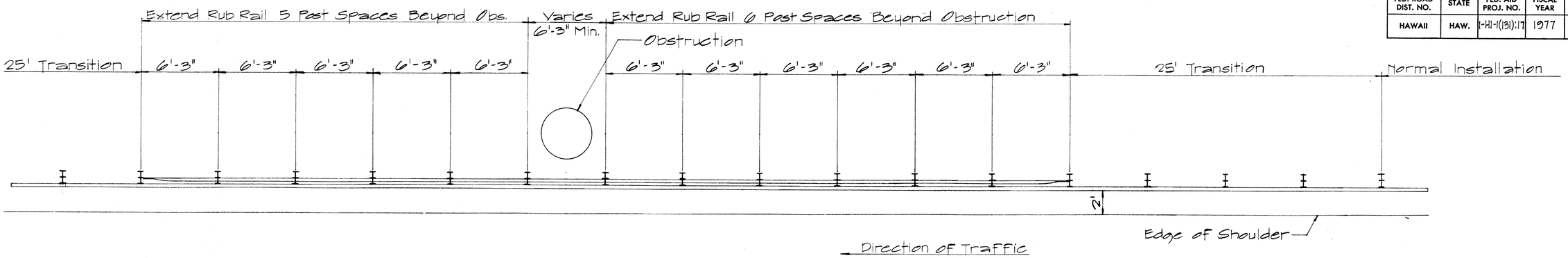

PLAN

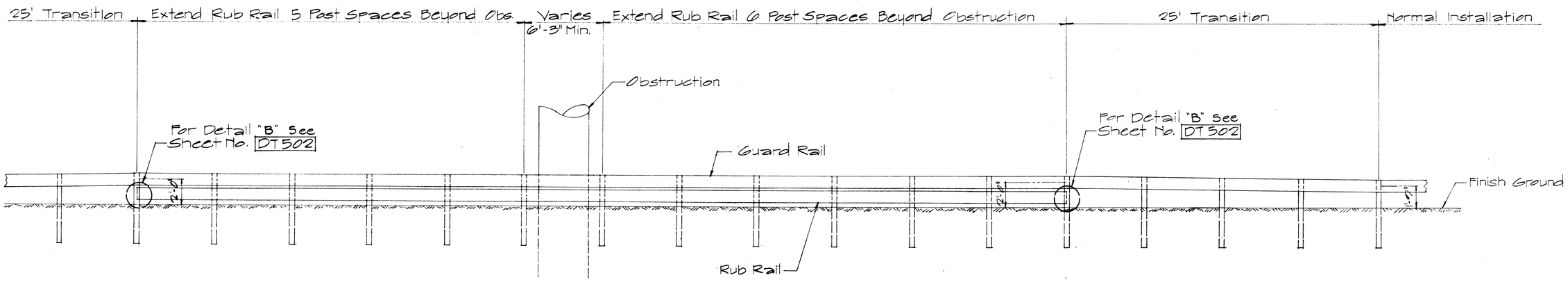

ELEVATION

DETAIL OF BEAM TYPE GUARD RAIL WITH RUB RAIL AT OBSTRUCTION

Sc. 1/4" = 1'-0"

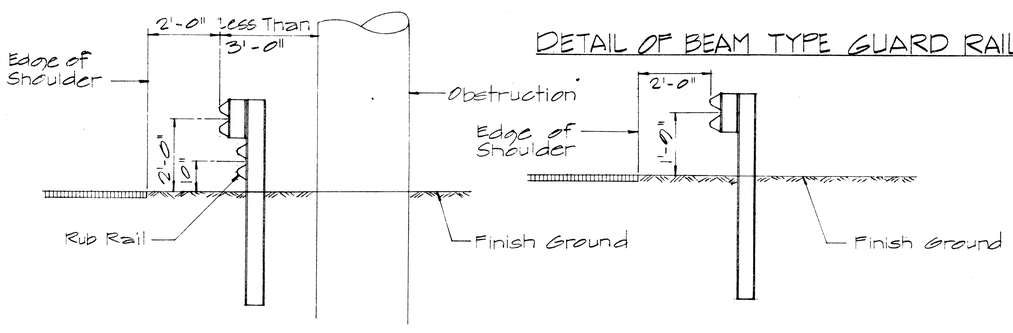

TYP. SEC. AT OBSTRUCTION

TYP. SEC. AT NORMAL INSTALLATION

TYP. GUARD RAIL SECTIONS

Sc. 1/2" = 1'-0"

APPROVAL RECOMMENDED:

Eiichi Tanaka — 12/29/69

TRAFFIC ENGINEER — DATE

APPROVED:

Stanley S. Sakai — 12-30-69

ASSISTANT CHIEF, ENGINEERING — DATE

NO.	REVISION	APPROVED BY	DATE

STATE OF HAWAII
DEPARTMENT OF TRANSPORTATION
LAND TRANSPORTATION FACILITIES DIVISION

STANDARD DETAIL

BEAM TYPE GUARD RAIL WITH RUB RAIL AT OBSTRUCTION (SHOULDER INSTALL)

Sc. AS SHOWN — DATE: JUNE 1960

SHEET No. 23 OF 26 SHEETS — DT 518

ORIGINAL PLAN	SURVEY PLOTTED BY	DATE
	DRAWN BY	
	TRACED BY	
NOTE BOOK	DESIGNED BY	
	QUANTITIES BY	
No.	CHECKED BY	

K+E CRYSTALENE® LA 2920 TRACING PAPER

FED. ROAD DIST. NO.	STATE	FED. AID PROJ. NO.	FISCAL YEAR	SHEET NO.	TOTAL SHEETS
HAWAII	HAW.	I-H-1(131):17	1977	61	394

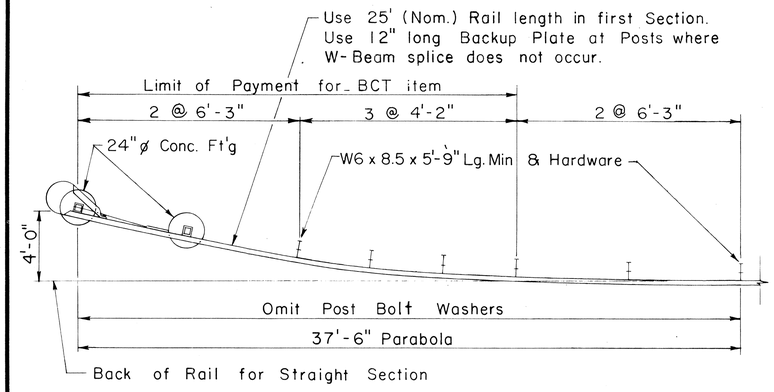

PLAN
Scale: 1/4" = 1'-0"

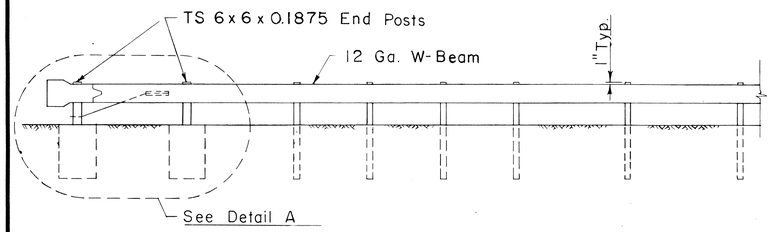

ELEVATION
Scale: 1/4" = 1'-0"

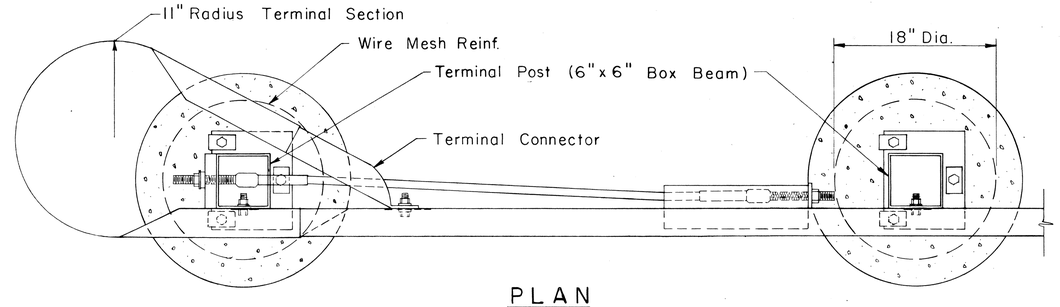

PLAN

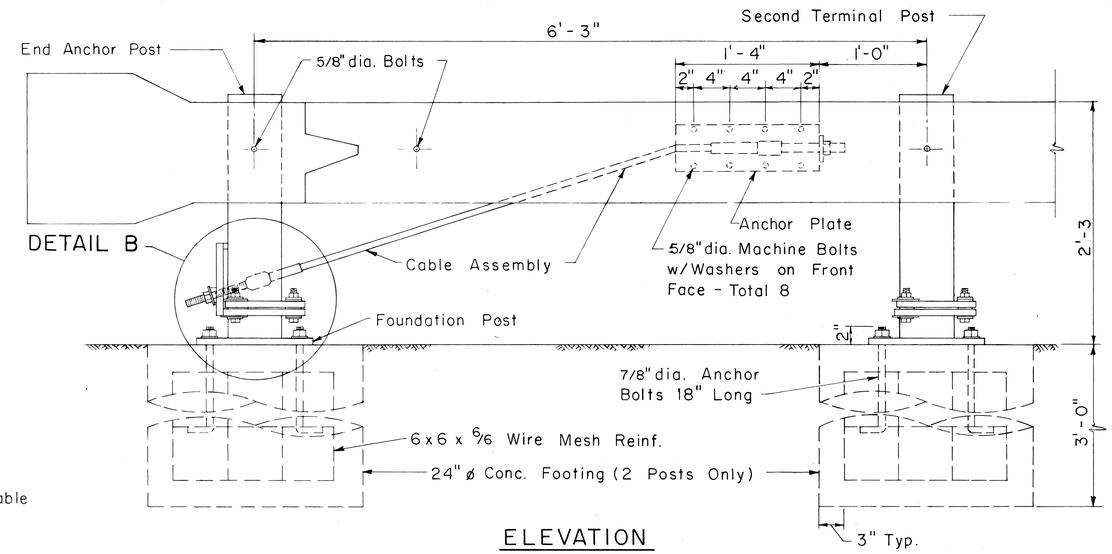

ELEVATION
DETAIL A
Scale: 1 1/2" = 1'-0"

NOTES:

1. Anchor Plate and Anchor Cable Assembly (Standard Swaged Fitting and Stud). See Standard Detail Sheet No. DT 520.
2. Other Anchor Cable Assemblies may be used. Minimum breaking strength of assembly should be 40,000 lbs.
3. Second Terminal Post does not require holes to accomodate Anchor Cable.
4. Slip Base Load shall be controlled with a Calibrated Torque Wrench - Torque 155 - 170 ft. lbs.
5. Concrete shall be Class A.

NOTE:
This tracing is similar to Sheet C.O. 585-1. during "As-Built" posting.

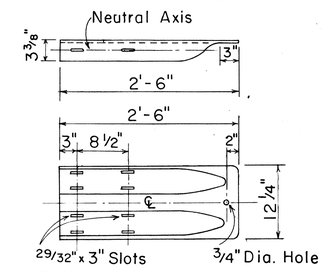

TERMINAL CONNECTOR
Scale: 1" = 1'-0"

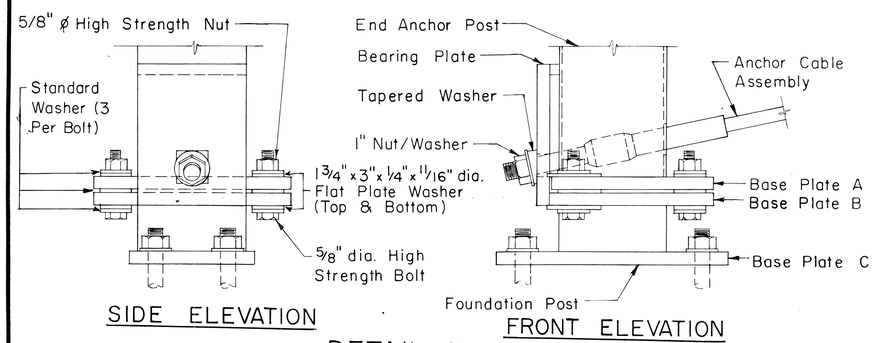

SIDE ELEVATION

FRONT ELEVATION

DETAIL B

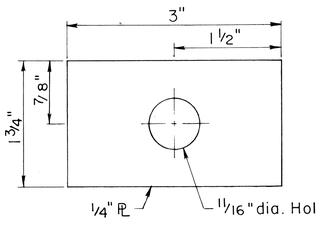

FLAT PLATE WASHER
Scale: Full Size

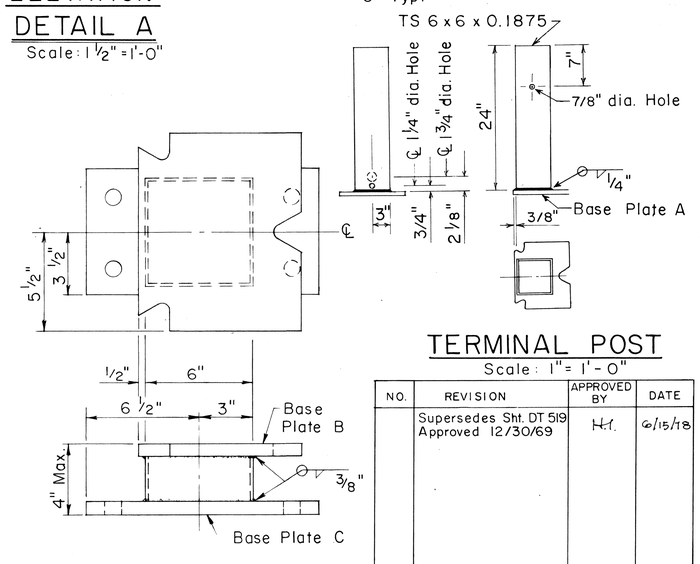

TERMINAL POST
Scale: 1" = 1'-0"

FOUNDATION POST
Scale: 3" = 1'-0"

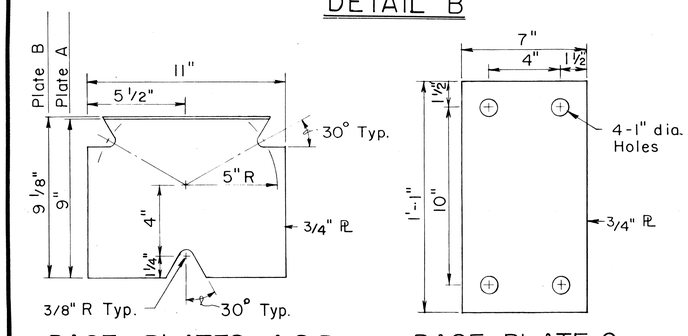

BASE PLATES A & B
Scale: 3" = 1'-0"

BASE PLATE C
Scale: 3" = 1'-0"

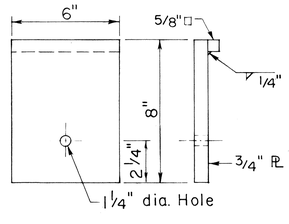

BEARING PLATE
Scale: 3" = 1'-0"

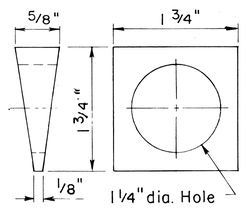

TAPERED WASHER
Scale: Full Size

NO.	REVISION	APPROVED BY	DATE
	Supersedes Sht. DT 519 Approved 12/30/69	H.I.	6/15/18

APPROVAL RECOMMENDED:

Eiichi Tanaka — 6/14/18
TRAFFIC ENGINEER — DATE

APPROVED:

Herbert Matsushita — 6/15/18
ASSISTANT CHIEF, ENGINEERING — DATE

STATE OF HAWAII
DEPARTMENT OF TRANSPORTATION
LAND TRANSPORTATION FACILITIES DIVISION

STANDARD DETAIL

BREAKAWAY CABLE TERMINAL (BCT)

Scale: As Shown — Date: June 1978

SHEET No. OF SHEETS DT 519

ORIGINAL PLAN	SURVEY PLOTTED BY	DATE
	DRAWN BY	"
	TRACED BY	"
NOTE BOOK	DESIGNED BY	"
No.	QUANTITIES BY	"
	CHECKED BY	"

C.O. 61

FED. ROAD DIST. NO.	STATE	FED. AID PROJ. NO.	FISCAL YEAR	SHEET NO.	TOTAL SHEETS
HAWAII	HAW.	I-H1-1(131)17	1977	62	394

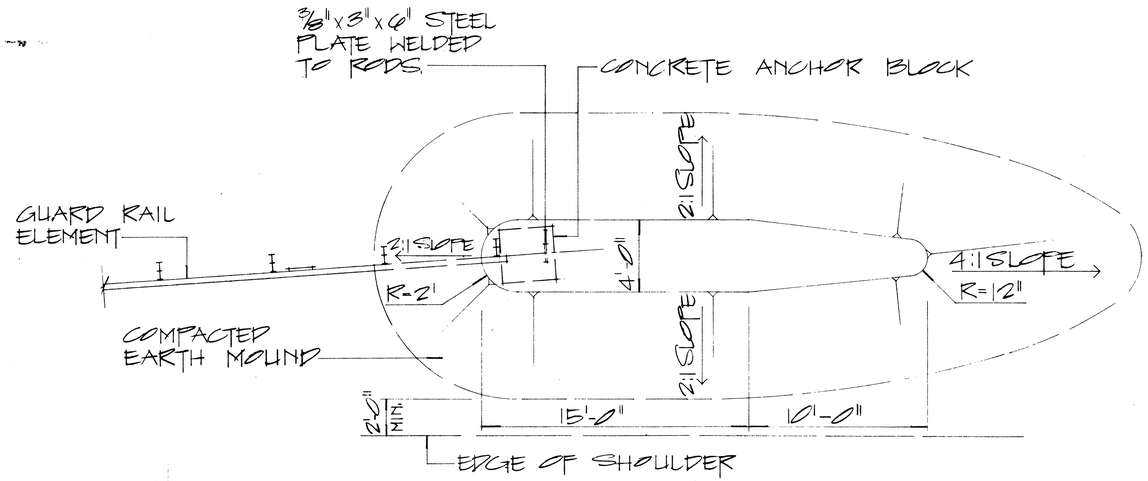

PLAN

EARTH MOUND DETAIL (SINGLE GUARD RAIL)

SCALE: 1/4" = 1'-0"

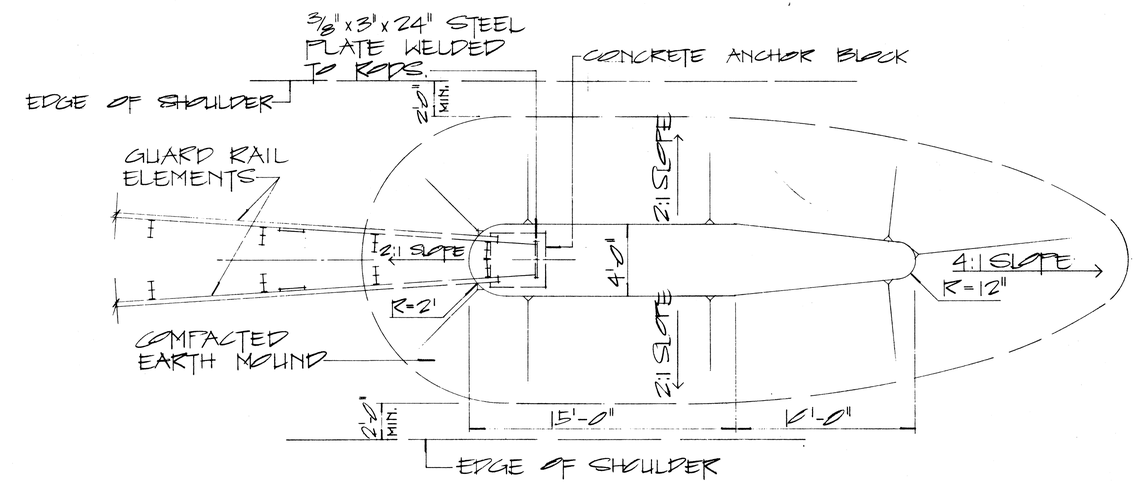

PLAN

EARTH MOUND DETAIL (DOUBLE GUARD RAIL)

SCALE: 1/4" = 1'-0"

*NOTE: 2'-0" WHEN INSTALLED WITH RUB RAIL.

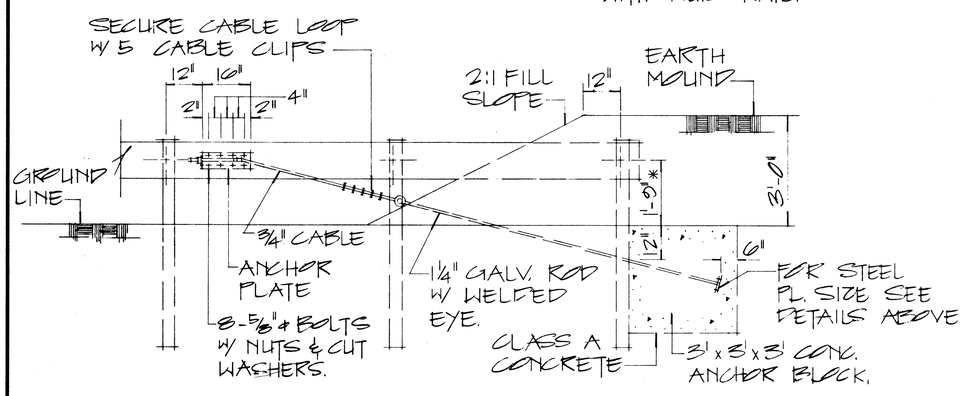

ANCHOR BLOCK DETAIL IN EARTH MOUND

SCALE: 1/2" = 1'-0"

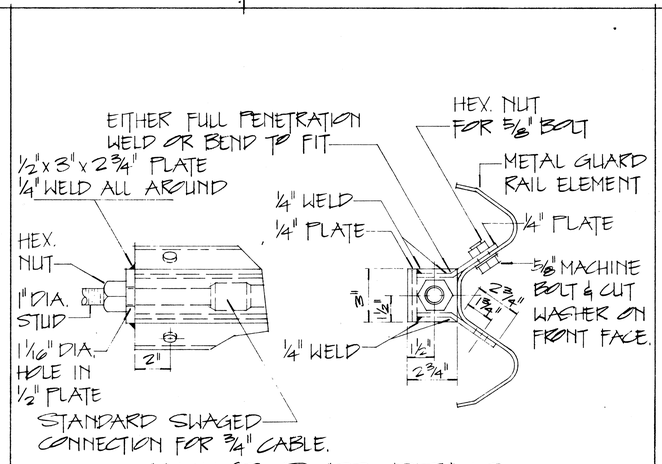

ANCHOR PLATE DETAILS

SCALE: 1" = 3"

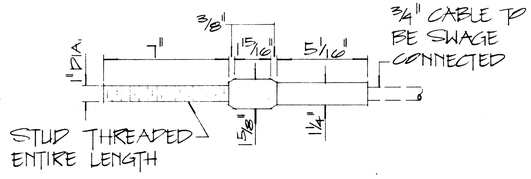

STANDARD SWAGED FITTING AND STUD

SCALE: 1" = 3"

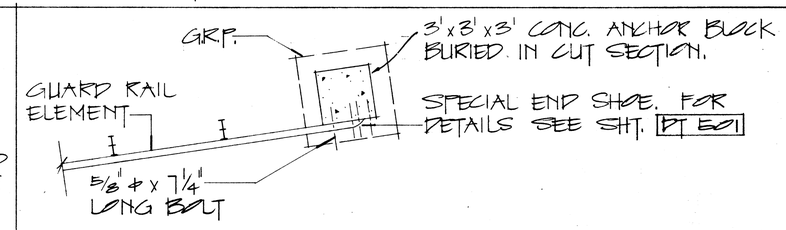

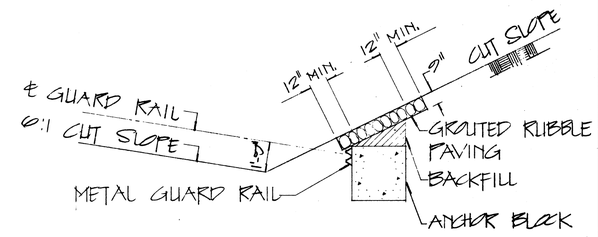

ANCHOR BLOCK IN CUT SECTION

SCALE: 1/4" = 1'-0"

NOTE:

1. GALVANIZED ANCHOR ROD, METAL GUARD RAIL AND POST BURIED IN GROUND SHALL BE COVERED WITH a Min. 20-Mil thickness of Coal TAR ENAMEL. Conforming to AWWA Standard: C 203
2. CONCRETE, G.R.P., EXCAVATION, EARTH MOUND, ANCHOR RODS AND MISCELLANEOUS APPURTENANCES NECESSARY TO ANCHOR THE GUARD RAIL ENDS SHALL BE INCIDENTAL TO THE METAL GUARD RAIL.

APPROVAL RECOMMENDED: Eichi Tanaka 12/29/69
TRAFFIC ENGINEER — DATE

APPROVED: [signature] 12-30-69
ASSISTANT CHIEF, ENGINEERING — DATE

NO.	REVISION	APPROVED BY	DATE

STATE OF HAWAII
DEPARTMENT OF TRANSPORTATION
LAND TRANSPORTATION FACILITIES DIVISION

STANDARD DETAILS

EARTH MOUND AND ANCHOR BLOCK DETAILS

SCALE: AS SHOWN OCT 1969

SHEET No. 25 OF 26 SHEETS PT520

ORIGINAL PLAN	SURVEY PLOTTED BY	DATE
	DRAWN BY	
	TRACED BY	
NOTE BOOK	DESIGNED BY	
No.	QUANTITIES BY	
	CHECKED BY	

K+E CRYSTALENE® LA 2920 TRACING PAPER

FED. ROAD DIST. NO.	STATE	FED. AID PROJ. NO.	FISCAL YEAR	SHEET NO.	TOTAL SHEETS
HAWAII	HAW.				

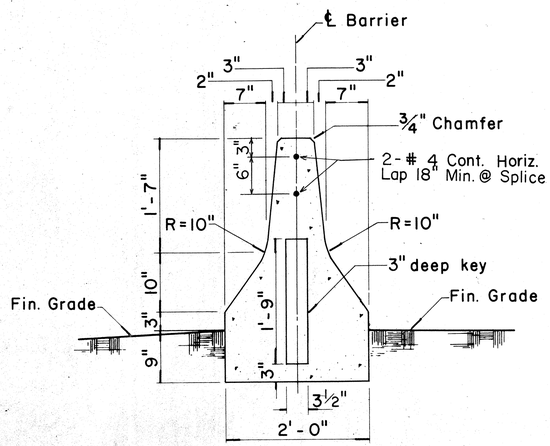

TYPE 4A

Scale: 1" = 1'-0"

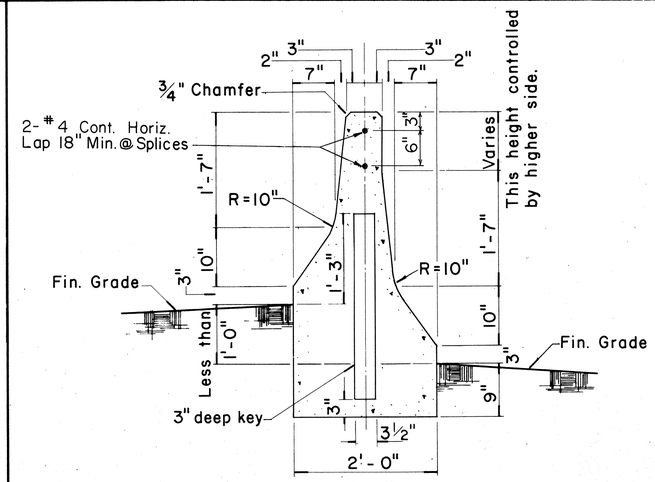

TYPE 4B

Scale: 1" = 1'-0"

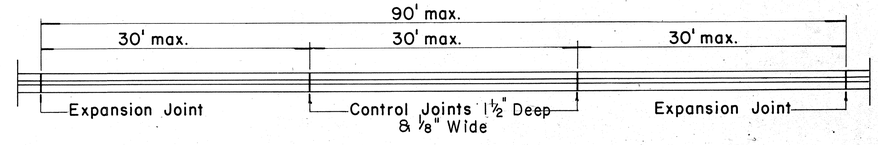

PLAN

Scale: ⅛" = 1'-0"

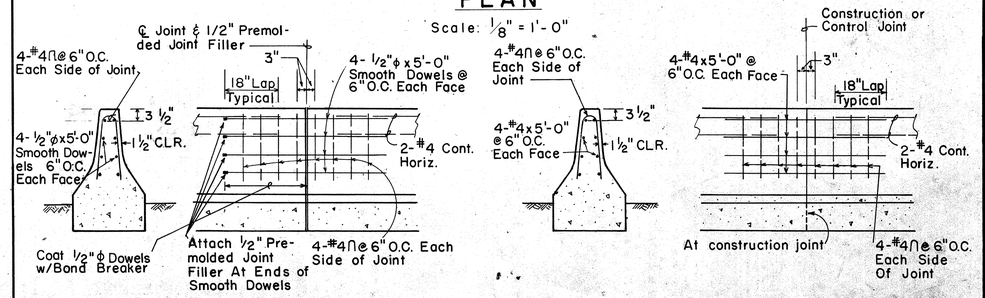

SECTION ELEVATION SECTION ELEVATION

EXPANSION JOINT DETAIL

SCALE: 1/2" = 1'-0"

ELEVATION

Scale ½

CONSTRUCTION & CONTROL JOINT DETAIL

SCALE: 1/2" = 1'-0"

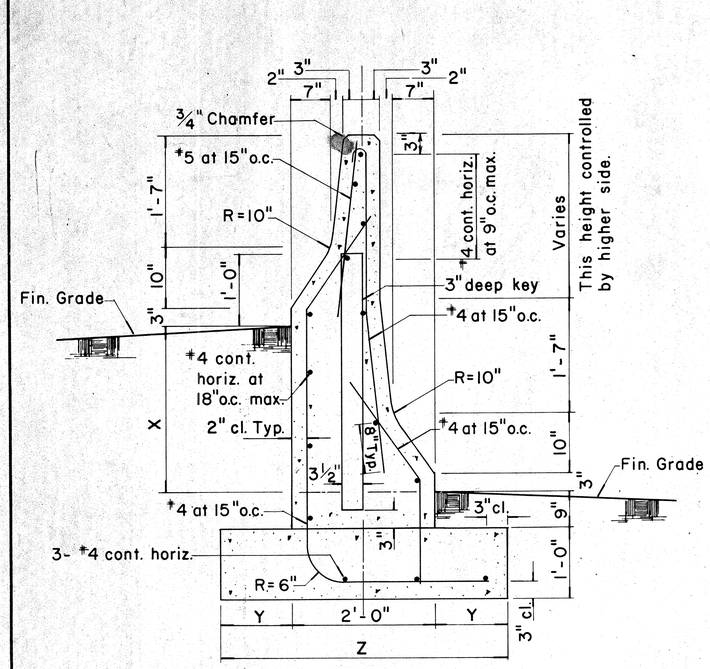

TYPE 4C & TYPE 4D

Scale: 1" = 1'-0"

TYPE	DIFFERENCE IN FIN. GRADE	FOOTING	
	X	Y	Z
4C	1'-0" min., 2'-4" max.	1'-0"	4'-0"
4D	Greater than 2'-4", 4'-4" max.	1'-3"	4'-6"

NOTE:

Except where noted all dimensions shall be the same for Type 4C and Type 4D.

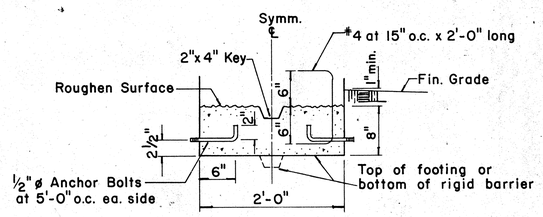

OPTIONAL CONSTRUCTION JOINT DETAILS

Scale: 1" = 1'-0"

NOTE:

The intent of the optional construction joint details for the Type 4 Rigid Barrier Guard Rail is to provide a method of securing the forms and preventing uplift so that the barrier will have a uniform and presentable appearance.
The Contractor may submit an alternate method of constructing the barrier for the approval of the Engineer and for use on a trial basis. Any unsatisfactory work shall be removed or corrected as directed by the Engineer and at the Contractor's expense.

GENERAL NOTES

1. Precast Rigid Barrier Guard Rail may be installed as an option to cast-in-place Type 4 Rigid Barrier Guard Rail. Contractor shall submit shop drawings to Engineer for approval.

2. Expansion Joints shall be constructed at ninety-foot (90 ft.) maximum intervals and at existing expansion joints of structures. (Use ½" premolded joint filler, incidental to Type 4 Rigid Barrier Guard Rail). Control Joints shall be placed between expansion joints at 30' maximum. Shear keys shall be required at all construction joints.
3. The exterior surface and vertical alignment of the Type 4 Rigid Barrier Guard Rail shall be constructed to give a uniform and presentable appearance. Variation of more than ¼" in 20' max. and ½" in 40' or more will be considered objectionable. The Engineer will determine the acceptability of the work.
During the course of the work, samples may be tested and measurements made to establish whether or not the specified values or dimensions are being met. If the specified values or dimensions are not being met, the Engineer will determine the degree of the non-conformance, the effect on the serviceability of the project, whether the work be accepted and remain in place and, if so, the amount to be paid for such work, or whether the work shall be removed and replaced or otherwise corrected at the Contractor's expense.

NO.	REVISION	APPROVED BY	DATE
1	Supersede Sht. DT 521 Approved 22-150789	[illegible]	5/21/82
2	Adde[illegible] 4 Steel Reinforcin[illegible] Bu[illegible] Dimensio[illegible] Type [illegible] Detail		
3	Added additional [illegible] dinal Steel [illegible]		

NOTE: 1/2" PREMOLDED JOINT FILLER IS NOT REQUIRED AT CONSTRUCTION JOINTS.

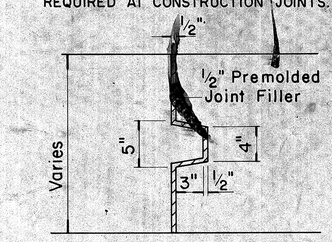

SECTION THRU KEY AT EXPANSION JOINT

Scale: 1½" = 1'-0"

APPROVAL RECOMMENDED:
Euichi Tanaka — 1/20/81
TRAFFIC ENGINEER — DATE

APPROVED:
Richard Sakaishi — 1/21/81
ASSISTANT CHIEF, ENGINEERING — DATE

STATE OF HAWAII
DEPARTMENT OF TRANSPORTATION
HIGHWAYS DIVISION
LAND TRANSPORTATION

STANDARD DETAILS

GUARD RAIL TYPE 4 (RIGID BARRIER)

Scale: As Shown

SHEET No. OF SHEETS DT 521

C.O. 63

ORIGINAL PLAN | NOTE BOOK No. | SURVEY PLOTTED BY | DRAWN BY | TRACED BY | DESIGNED BY | QUANTITIES BY | CHECKED BY | DATE

FED. ROAD DIST. NO.	STATE	FED. AID PROJ. NO.	FISCAL YEAR	SHEET NO.	TOTAL SHEETS
HAWAII	HAW.	I-HI-I(131):17	1977	635-1	304

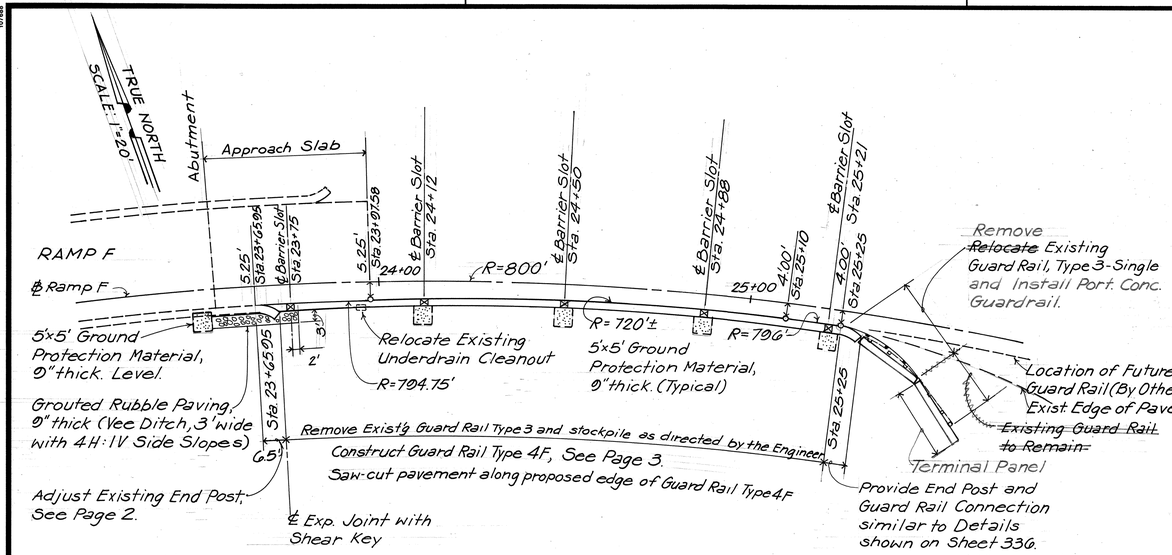

GUARDRAIL TRANSITION TO MEET EXISTING GUARDRAIL
RAMP F STA. 23+65.95

PLAN
SCALE: 1" = 20'

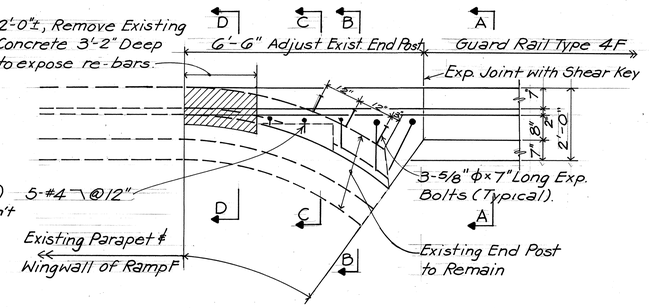

PLAN-ADJUSTMENT OF EXISTING END POST
SCALE: 1/2" = 1'-0"

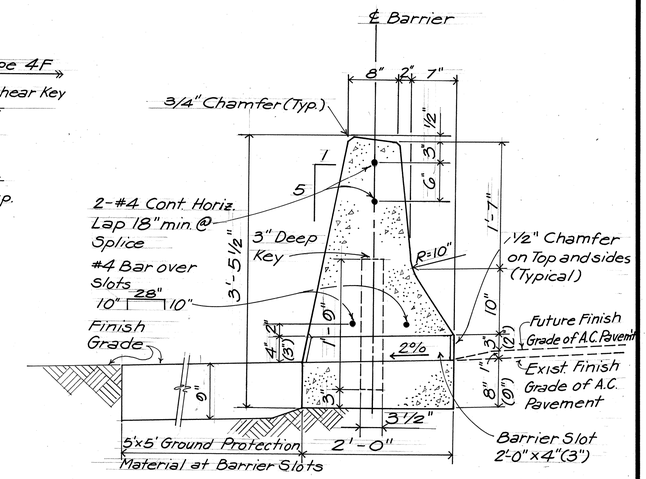

Notes: 1. Dimensions in ( ) apply only to Barrier Slot adjacent to Approach Slab.
2. For General Notes see Standard Sheet G3.

SECTION A-A
TYPICAL SECTION-GUARDRAIL TYPE 4F
SCALE: 1" = 1'-0"

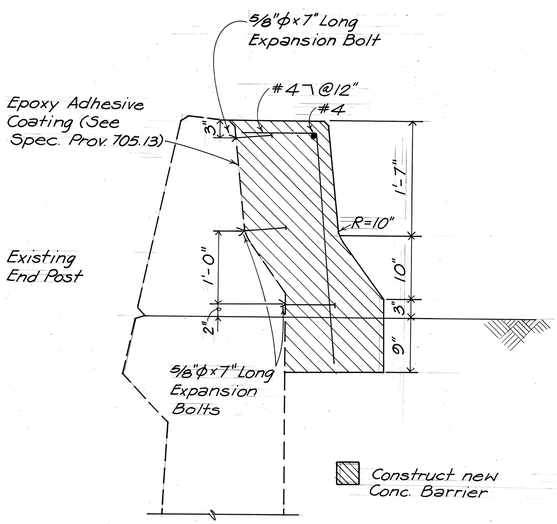

SECTION B-B
SCALE: 1" = 1'-0"

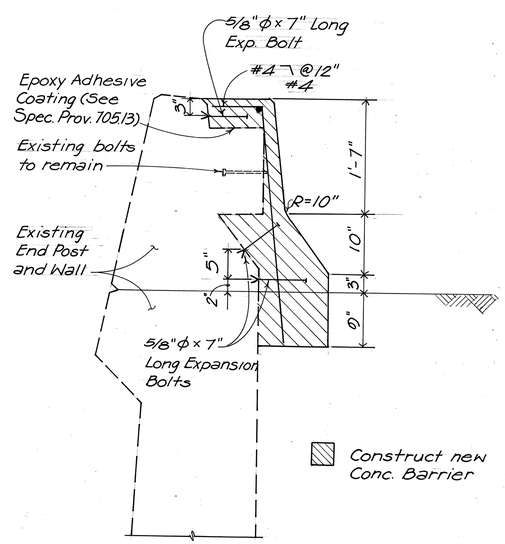

SECTION C-C
SCALE: 1" = 1'-0"

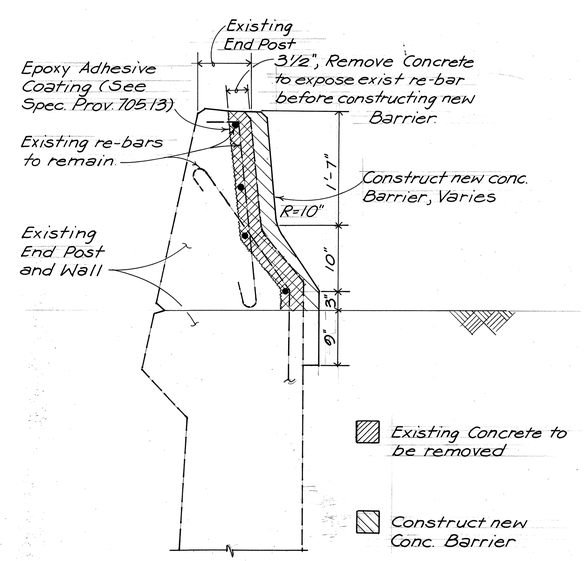

SECTION D-D
SCALE: 1" = 1'-0"

Note: This tracing prepared during "As-Built posting.

STATE OF HAWAII
DEPARTMENT OF TRANSPORTATION
HIGHWAYS DIVISION

TYPE 4F GUARDRAIL
RAMP F STA. 23+65.95 TO 25+31

INTERSTATE ROUTE H-1
PROJECT NO. I-HI-I(131):17

SCALE: AS SHOWN

SHEET No. / OF / SHEETS

ORIGINAL PLAN | SURVEY PLOTTED BY | DRAWN BY | TRACED BY | DESIGNED BY | QUANTITIES BY | CHECKED BY | DATE | NOTE BOOK No.

63S-1